SCANNED 3/13/14 Carmen Johnson

Received
Solid Waste
Section

HWY 55 TYPE 1 REPROCESSING FACILITY APPLICATION WAKE COUNTY, NC

Prepared For:

NCDENR
Division of Waste Management
Raleigh, North Carolina

Prepared By:

PATTERSON BREWER & Associates
Engineering • Surveying • Planning

P.O. Box 1387
Mooresville, NC 28115

NORTH CAROLINA PROFESSIONAL SEAL 17582 ENGINEER DAN E. BREWER
12/18/02

Note:

All Drawings at End of File

HIGHWAY 55 TYPE 1 REPROCESSING FACILITY

TABLE OF CONTENTS

1.0 SITING AND DESIGN REQUIREMENTS

2.0 APPLICATION REQUIREMENTS

3.0 OPERATIONAL REQUIREMENTS

4.0 REPORTING REQUIREMENTS

APPENDECES

APPENDIX 1

SITE PLAN

EROSION AND SEDIMENTATION CONTROL PERMIT

STORM WATER DISCHARGE PERMIT

SOIL TEST BORINGS

GEOTECHNICAL DATA TABLE

PROPERTY DEED

APPENDIX 2

AERIAL PHOTOGRAPH

¼-MILE RADIUS MAP

ZONING APPROVAL LETTERS

FIRE DEPARTMENT LETTER

APPENDIX 3

PROCESSING EQUIPMENT SPECIFICATIONS AND O&M MANUALS

1.0 SITING AND DESIGN REQUIREMENTS

The Highway 55 Type 1 Reprocessing Facility is sited and designed in accordance with Section .1404 of the North Carolina Solid Waste Management Rules. A description of each siting and design requirement is listed below in the order presented in Section .1404 of the Solid Waste Management Rules.

1.1 Floodplain

As shown on the Site Plan, presented in Appendix 1, the site is not located within a 100-year floodplain. The 100-year floodplain is below the southwestern property boundary on Little Branch.

1.2 Property Line Buffers

The site provides a minimum buffer of 100 feet from the property lines. The minimum buffer requirements for a Type 1 facility is 50 feet to property lines. Buffers are shown on the Site Plan presented in Appendix 1.

1.3 Residential Buffers

The site provides a minimum 200-foot buffer from the compost areas to residences or dwellings. Buffers are shown on the Site Plan. Nearest residence is 1200 feet from the facility.

1.4 Well Buffers

The site provides a minimum 100-foot buffer from the compost areas to water supply wells. As shown on the ¼-mile Radius Map in Appendix 2, no water supply wells are located within ¼ mile of the facility.

1.5 Stream Buffers

The site provides a minimum 50-foot buffer from the compost areas to streams.

1.6 Surface Waters Water Quality Standards

The site has been designed in accordance with NCDENR water quality standards. The erosion and sedimentation control permit presented in Appendix 1 includes the drainage area for the entire property.

The facility will fall under NPDES General Permit No. NCG010000. A copy of this permit is included in the Appendix 1 with the Erosion and Sedimentation Control Permit.

1.7 Compost Areas Over Closed-out Landfilled Areas

Proposed windrow areas within permitted landfill areas will be removed prior to landfilling. No windrows will be located on landfilled areas.

1.8 Compost Area Separation Requirement

As shown on the Site Plan, a minimum 25-foot separation is provided between all windrow areas and drainage structures to allow for access of fire fighting equipment.

1.9 Surface Water Requirements

The site does not cause discharge of materials into waters or wetlands of the State. As shown on the Site Plan, existing erosion control structures will prevent the discharge of materials into any waters.

The site does not cause discharge of pollutants into waters of the State. As required by the NPDES, a stormwater permit (General Permit No. NCG010000) for the facility has been obtained.

The site does not cause non-point source pollution of waters of the State that violates assigned water quality standards.

1.10 Groundwater Requirements

The site does not contravene groundwater standards as established under 15A NCAC 2L. Due to the composition of the materials, no groundwater sampling is required.

Portions of the site used for storage and reprocessing have soil textures finer than loamy sand and seasonal high water depths greater than 12 inches in depth. A hydrogeologic assessment was performed for the permitting of the on-site C&D landfill. Soil test borings and monitoring wells were performed throughout the landfill and composting areas. Soil test borings (SB-4, SB-5 and SB-6) and monitoring wells (MW-1, MW-9, MW-10 and MW-21) were performed in the reprocessing area. Locations are shown on the Site Plan. Soil Test and Monitoring Well logs are presented in Appendix 1. As indicated on the logs, near surface soils generally classify as clayey silts. Soil permeability tests were also performed on near surface clays as shown on Table 4 in Appendix 1. Bedrock was encountered prior to intercepting groundwater in and around the reprocessing area.

Pads are not required for the facility's product due to the composition of the material. Also, the windrows are placed so that the natural slope allows positive drainage of surface water along the base of the windrows. Surface water does not collect along the base of the material, and storage areas are well above minimum seasonal high water table depths of 12 inches. The depth to water in this area of the site is greater than 20 feet below groundsurface.

1.11 Site Access

As shown on the Site Plan, the site is designed with a gated entrance to control public access to the facility.

1.12 Sedimentation Pollution Control Law

The entire site has an approved erosion and sedimentation control plan as required by the Sedimentation Pollution Control Law. The existing erosion control structures are designed for the C&D landfill as well as the composting areas. A copy of the erosion and sedimentation control permit is included in Appendix 1.

1.13 Air Pollution Control Requirements

The site meets the requirements of the Air Pollution Control Requirements as outlined in 15A NCAC 2D. Due to the composition of the material and based upon communications with the NCDENR Air Quality Section, no air quality permitting is required for this facility.

In regards to fugitive emissions from the on-site equipment, the power screens are supplied with misters that reduce dust emissions.

The Highway 49 Reprocessing Facility does not have a permanent on-site tub grinder that would require an air quality permit. This facility contracts its tub grinding operations on a temporary, as needed basis. The tub grinder operator has a separate air quality permit for his equipment where required.

1.14 Odor Control

Due to the composition of the material, odor is not a problem at the facility. If odor becomes a problem with the grass clippings for the compost material, additional leaves and wood chips will be mixed with the grass clippings. Odor at the on-site C&D landfill is controlled by the application of soil cover.

2.0 APPLICATION REQUIREMENTS

2.1 Project Description

The proposed Highway 49 Reprocessing Facility is a Type 1 facility located off Old Smith Field Road in Wake County, NC. The site is bound to the north by the Proposed Wake County Expressway, to the east by undeveloped wooded property, to the west Little Branch Creek and to the south by Falls Branch Creek. A detailed property description is presented on the Site Plan. A copy of the property deed is included in Appendix 1. Locations of all homes, wells, industrial buildings, utilities, roads, watercourses, dry runs, and other topographic information is presented on the ¼ Mile Radius (Figure 3) Aerial Photograph and ¼-Mile Radius Survey Map (Figure 4) presented in Appendix 2. Land use is residential to the east and generally woodlands to the north, west, and south.

2.2 Zoning Approval

The site is located in an Industrial Zoning District (I-1). Wake County issued a "Special Use" zoning approval of the facility on August 14, 2001 (Figure 4- ¼ Mile Radius Survey Map indicates zoning). A copy of the Zoning Approval, Special Use Permit and Franchise Agreement is presented in Appendix 2.

2.3 Siting and Design Standards

Siting and design requirements (Section .1404) are presented in Section 1.0 of this Application.

2.4 Description of Materials and Pads

The site operations involve the processing of compost in the form grass clippings and loose leaf, ground land-clearing debris in the form of tree stumps, tree limbs and branches and soil from land clearing debris. Aggregate inert debris such as brick and concrete will also be processed at this site. Soil compaction for the windrows pads can be found in Appendix 1, Table 4.

Expected yearly quantities of product generated are as follows:

- Compost (grass clippings and loose leaf)- 3,000 cubic yards/year
- Ground land-clearing debris (tree stumps, tree limbs, branches, etc.)- 6,000 cubic yards/year
- Soil from land-clearing debris- 2,000 cubic yards/year
- Aggregate (crushed inert debris such as brick and concrete)- 4,000 cubic yards/year

As presented in Section 1.10 above, soil test borings and monitoring well installations were performed by a geologist for the permitting of the on-site C&D landfill. Groundwater depths are estimated to be greater than 20 feet. Soil test boring logs and monitoring well installation records are presented in Appendix 1.

No chemical tests were performed on the subsurface soils since the clayey soils and are not expected to have any chemical properties that may affect the types of materials used for the composting operations. Soil laboratory tests performed on near surface clays indicate low permeability's as shown on Table 4 in Appendix 1.

2.5 Site Plan Information

The Site Plan included in Appendix 1 has the existing and proposed contours, location and elevations of surface water control and diversion structures. Designated setback and property lines, utilities and structures, and areas for unloading, processing, composting, and material storage areas are also shown on the Site Plan.

2.6 Facility Description Report

2.6.1 Facility Personnel

The facility property is owned. and operated by Highway 55 C&D Landfill, LLC. There are four (4) positions involved in the reprocessing area: Manager, Assistant Manager, Secretary/ Office Coordinator and Technicians. The following describes each of their responsibilities and qualifications.

Manager: Roger Barnes

The Manager is a SWANA certified C&D landfill manager with over 10 years of C&D landfill experience. The Manager also has over 5 years of recycling/reprocessing experience. The Manager will be responsible for coordinating the delivery and setup of all recycling equipment for reprocessing of all materials on a quarterly basis. The Manager will supervise the on-site staff.

Assistant Manager: Steve Blossom

The Assistant Manager will coordinate all placements of products in windrows for bulk storage. In conjunction with the Manager, they will coordinate the composting the activity on all yard waste products. They will direct the technician level staff including equipment operators for routing of final product.

Secretary/Office Coordinator: To be named later.

The Secretary/Office Coordinator will direct all deliveries of materials that will be recycled. This position will be responsible for tracking and reporting all loads based on content, weight and source of generation. All Town of Apex loads will be tracked separately by this position. This position will coordinate pick-up of products by local residents. This position will be responsible for generating a monthly report that will track all product types. The monthly report will be submitted to the Town of Apex.

Technicians: To be named later.

The Technicians will be responsible for moving the products from the drop-off area to the reprocessing area on a daily basis. They will also be responsible for moving mulch products to active areas of the landfill for slope management and erosion control on an as needed basis. The technicians move the aggregate products as needed for construction and haul road improvements. Technician staff will also load Town of Apex residents and local Wake County residents with mulch for use on their yards. The position will report to the assistant manager.

2.6.2 Hours of Operation

The reprocessing facility will be open Monday through Sunday from the hours of 7:00 am to 7:00 pm.

2.6.3 Drop Off Area

The drop off area is located near the scalehouse entrance area of the C&D landfill as shown on the Site Plan. The material is separated at the drop off area. This area includes 1.0 acre asphalt paved drop-off. Material that is not suitable for reuse is disposed into the C&D landfill.

2.6.4 Windrow Construction

The processed waste is placed in windrows at the locations shown on the Site Plan. The windrows shall be placed with a minimum buffer of 100 feet from wells and 200 feet from residences. Since the project is within the Town of Apex Water and Sewer District there are no residential wells within ¼ mile of the facility. The nearest residential residence is 1200 feet from the facility. (See Figure 4, ¼ mile radius map, which indicates location of residential homes and provides drinking water well survey information).

The windrows will be placed about 8 to 12 feet high and up to 300 feet in length. Windrows up to 12 feet in height will require a base width of 20 feet. Each windrow will be placed no closer than 25 feet apart. Windrow construction will progress as needed on Phase 3 of the proposed C&D landfill. These windrows will be removed prior to landfilling within Phase 3. No windrows will be placed on landfilled areas unless approved by NCDENR and in accordance with pad testing outlined in Section .1404(a)(10) of the Solid Waste Management Rules.

2.6.5 Windrow Processing Equipment

The following equipment is owned and operated by Highway 55 Landfill, LLC:

- 950F CAT Loader
- Trackhoe
- 943 CAT Track Loader

- Ford F-650 Dump Truck
- 630 Trommel Powerscreen
- Eagle Rock Crusher

The Tub Grinder will be subcontracted on an as needed basis. Detailed information for the powerscreen, rock crusher, and tub grinder is included in Appendix 3. The air quality permit for the rock crusher is also included in Appendix 3.

2.6.6 Windrow Processing

Other than compost, the majority of the material is stored in windrows and does not need turning. Processing of compost windrow is presented in Section 2.7 and 3.0 of this report.

2.6.7 Adverse Weather Conditions

Processing, loading, and storage of bulk product is generally done regardless of weather conditions. Additional information regarding adverse weather conditions is presented in Section 3.7 of this report.

2.6.8 Noise, Vectors, Dust, and Odors

Noise at the site is generated due to the type of operation at the facility. Extensive tree buffers are provided around the site perimeter to aid in buffering the equipment noise. Mufflers are also provided on all gasoline engines.

Dust generated due to operations will be controlled by the application of water by truck or other approved dust control products, if necessary. Removal of mud and dirt from the roads will also be a part of the dust control measures. Additionally, final landfill cover and borrow areas will be vegetated as soon as practical in order to reduce the blowing of dust on-site. Misters located within the hopper equipment control dust produced from the hoppers.

Odors are not anticipated to be a problem at this site. If odor becomes a problem with the grass clippings for the compost material, additional leaves and wood chips will be mixed with the

grass clippings. Material that is not reprocessed is disposed in the C&D landfill. Odor at landfills is generally controlled by the application of soil cover. Control of vectors at the on-site C&D landfill will be reduced by the application of soil cover.

2.6.9 End Use of Product

The processed material is either used on-site or by the Town of Apex or Wake County residents. The compost and mulch material is offered to local residents free of charge.

2.7 Design Report

2.7.1 Design Capacity

The design capacity of the facility is approximately 20,000 cubic yards per year.

2.7.2 Material Processing

The following section provides general material processing information. Detailed operations information with flow diagrams is presented in Section 3.0 of this report. Detailed operations and maintenance manuals for the equipment listed is presented in Appendix 3.

1) Compost (grass clippings and loose leaf)
   Grass clippings generated by the Town of Apex will be brought in free of charge in bulk loads. All material will be transported through the scales for weight verification. At this time it will be transported to drop-off area for unloading. The grass clippings and leaves will be moved and segregated in compost windrows. Product mixing may include some soil and mulch fines to enhance nutrification. Compost will be used on-site to maintain natural areas. Compost will also be available to Town of Apex or Wake County residents free of charge.

2) Ground land-clearing (tree stumps, tree limbs etc.)
   Land clearing debris will be transported in bulk loads and weighed at scalehouse. At this time it will be transported to drop-off areas. The land-clearing debris will be routed to

temporary stockpile in the reprocessing area. This material will also be stored in windrows for proper management. The material will be scheduled for grinding quarterly or when windrows storage reaches a capacity of 3,000 cubic yards. A Diamond Z tub grinder will be transported in and set up in the area shown on the Site Plan for processing. The mulch products will then be deposited in windrows for storage. All windrow mulch products will be power screened for fines separation and topsoil generation. Mulch products will be used on-site to supplement erosion control measures. Also, mulch material will be offered to townspeople of Apex and local residents of Wake County free of charge.

3) Soil from land-clearing debris

The topsoil from root balls of stumps will be removed prior to grinding and stockpiled separately. The fines from the mulch screening will be mixed with the topsoil from the root balls and power screened to refine product type. This material will then be windrowed for storage. This material will be used on-site to enhance cover soils for hydro-seeding. Also, some topsoil products may be offered to Town of Apex and local residents for use as landscaping.

4) Aggregate (crushed inert debris such as concrete, brick, block etc.)

Segregated loads of clean inert debris will be weighed at scalehouse and directed to drop-off area. At this time, inert debris will be transported from drop-off to the reprocess area to stockpile. This material will not be placed in windrows. The temporary storage area is shown on the Site Plan. This material will be scheduled for processing quarterly or when storage reaches a capacity of 2000 cubic yards. A Bohringer Eagle rock crusher which is rated at less than 100 tons per hour will be used for processing inert materials. This product will be used on-site for construction of haul roads.

2.7.5 Temperature Monitoring

The compost is monitored once monthly for temperature. For compost windrows that have been in storage for 30 days or longer, the temperature is monitored weekly. The temperature probes will be placed in the compost to measure and document temperature generations. The recorded temperature will be used to ensure that the minimum 131 degrees for three days are maintained for the compost.

If the recorded temperature falls below the 131 degrees specified, the required pathogen testing (in accordance with Appendix B of .1400) will be performed every 6 months or 20,000 yards.

The procedure for temperature is random testing of all stored compost in windrows at the frequencies mentioned above. Every compost windrow will be monitored with a compost thermometer, which has a 48-inch probe to ensure that all areas inside the windrow can be measured. Each probe measurement will be obtained every 50 feet using the full extent of the probe. Each probe will be monitored for a period of approximately five minutes or until the temperature has stabilized. Each monitoring event will be recorded on a monitoring chart. The probe will be checked twice daily at the same location for temperature recordation. If necessary, additional windrow turning will be performed for the compost to bring the temperatures up to the required 131 degrees for three days.

2.7.6 Temperature Control

Windrow turning is performed for the compost once to twice monthly by turning the compost windrows with a front-end loader. If temperatures for the compost windrows are falling below the required minimum131 degrees for three days, additional windrow turning will be performed.

In addition to windrow turning, mixing of grass clippings with the wood chips and leaves will enhance biodegradation. If additional turning does not bring temperatures to the desired range, ammonium nitrate may be added to enhance biodegradation.

2.7.7 Surface Water Control

Surface water run-on is controlled by the use of diversion channels or berms along the site perimeter. Surface water run-off is routed to the on-site erosion and sedimentation control structures. Surface water sheet flows off the windrows; therefore, no leachate is generated.

2.8 Labeling

No commercial bagging or selling of this product will take place at this facility. However, compost that is provided in bulk pick-up truckload to area residents will be given a handout. The handout will read, "This is yard waste compost prepared in accordance with NCDENR guidelines and can be used for general landscaping purposes." General instructions on how to apply the compost will also be included on the handout.

2.9 Equipment Plans and Specifications

Detailed information regarding the on-site processing equipment is presented in Appendix 3 for reference.

3.0 OPERATIONS AND MAINTENANCE MANUAL

3.1 Introduction

The proposed Highway 55 Reprocessing Facility is a Type 1 facility located on Old Smith Field Road and Hwy 55 Bypass in Wake County, NC. This Operations and Maintenance Manual has been prepared in accordance with Section .1405(a)(10) of the North Carolina Administrative Code.

3.2 Plan and Permit Requirements

All construction plan and conditions of the permit shall be followed. A copy of the plans, permits, and operational reports shall be maintained at the office at all times.

3.3 Hours of Operation

The reprocessing facility is open Monday through Sunday from the hours of 7:00 am to 7:00 pm.

3.4 Drop Off Area

The drop off area is located near the scale house and entrance area of the C&D landfill as shown on the Site Plan. Material is to be separated at the drop off area into material type. Signs for "Grass Clippings and Leaves", "Land Clearing Debris", "Topsoil", and "Aggregate" will be posted at the drop off area.

An inspector will be located at the drop off area to inspect each incoming load. Waste that is not permitted for disposal in the C&D landfill shall be disposed in the on-site 40 cubic yard waste container for future disposal at a permitted municipal solid waste landfill.

3.5 Windrow Construction

Following grinding and screening of the land clearing debris, the mulch is placed in windrows at the locations shown on the Site Plan (Station 4). The compost is placed in the compost windrows at the locations shown on the Site Plan (Station 5). The windrows shall be placed with a minimum buffer of 100 feet from wells and 200 feet from residences. The windrows will be placed about 8 to 12 feet high and up to 500 feet in length. Windrows up to12 feet in height will require a base width of 20 feet. Each windrow will be placed no closer than 25 feet apart. Windrow construction will progress as needed on Phase 3 of the proposed C&D landfill. These windrows will be removed prior to landfilling within Phase 3. No windrows will be placed on landfilled areas unless approved by NCDENR and in accordance with pad testing outlined in Section .1404(a)(10) of the Solid Waste Management Rules.

3.6 Windrow Processing

The majority of the material is stored in windrows and does not need turning. Only the compost takes an extended period to process. The compost windrows are turned once to twice monthly and remain in windrows for approximately 3 to 6 months for aging prior to use.

3.7 Adverse Weather Conditions

Processing, loading, and storage of mulch, compost and aggregate are generally done regardless of weather conditions. Covered storage may be provided for the topsoil products.

The entrance and drop off area are provided with all-weather roadways. During periods of snowfall, the roadways will be kept cleared. During periods of high winds, tub grinding and screening may be stopped if dust becomes a problem. As described below, dust will also be controlled by keeping roadways cleaned and applying water to areas creating the dust.

3.8 Noise, Dust, Odors and Vectors

Noise at the site is generated due to the type of operation at the facility. Extensive tree buffers are provided around the site perimeter to aid in buffering the equipment noise. Mufflers are also provided on all gasoline engines.

Dust generated due to operations will be controlled by the application of water by truck or other approved dust control products, if necessary. Removal of mud and dirt from the roads will also be a part of the dust control measures. Additionally, final landfill cover and borrow areas will be vegetated as soon as practical in order to reduce the blowing of dust on-site. Misters located within the hopper equipment control dust produced from the hoppers.

Odors are not anticipated to be a problem at this site. If odor becomes a problem with the grass clippings for the compost material, additional leaves and wood chips will be mixed with the grass clippings. Material that is not reprocessed is disposed in the C&D landfill. Odor at landfills is generally controlled by the application of soil cover. Control of vectors at the on-site C&D landfill will be reduced by the application of soil cover.

3.9 Material Processing and Flow Diagrams

The following operations information refers to station numbers presented on the Site Plan and on the attached Flow Diagram. Detailed operations and maintenance manuals for the equipment listed is presented in Appendix 3.

FLOW DIAGRAM

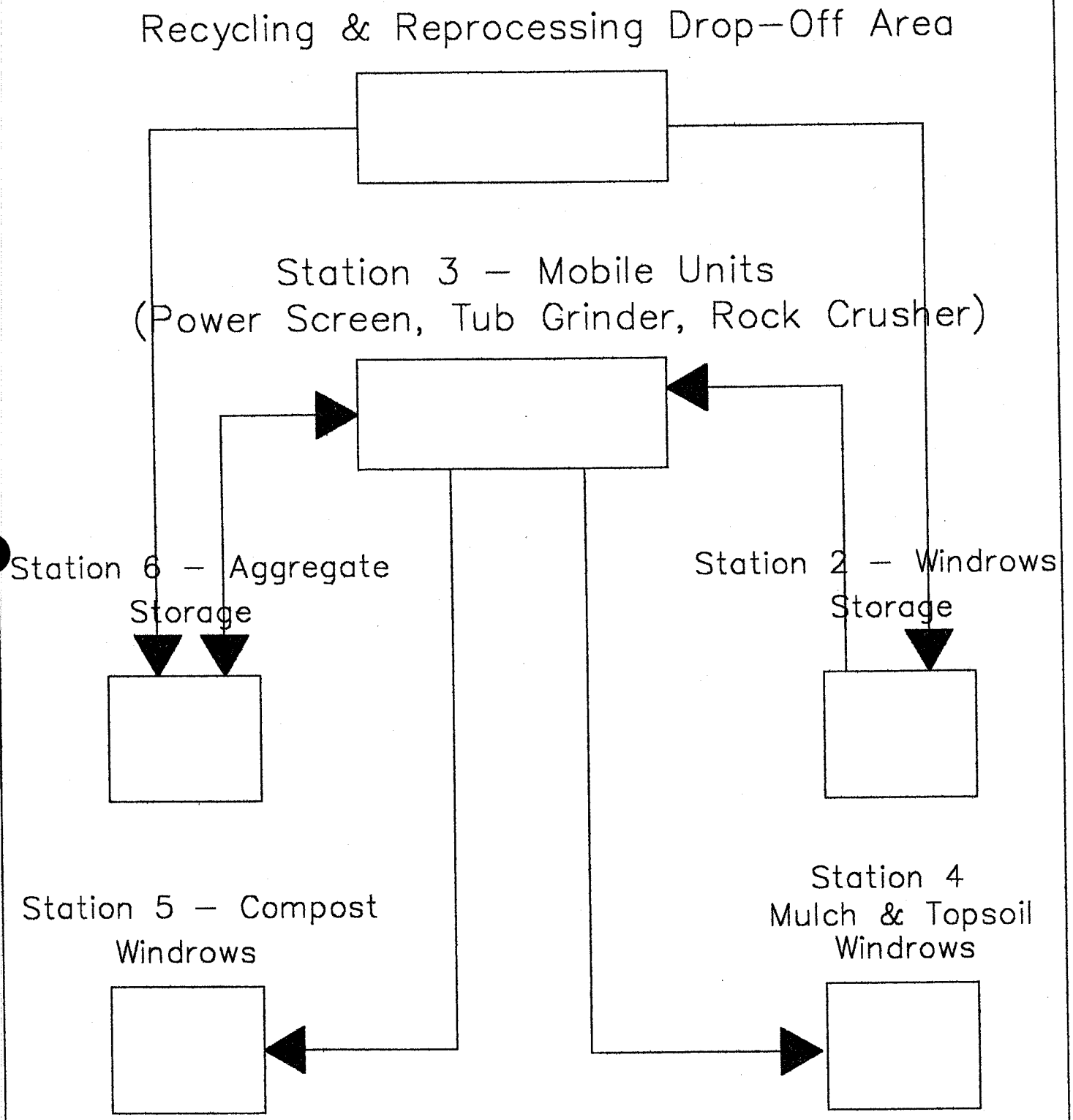

3.9.1 Compost (grass clippings and loose leaf)

Station 1- Drop off area for bulk grass clippings or loose leaf to be processed. Station 2 – Storage in windrows in reprocessing area. Station 3- Power screens mixing area. Station 5- Back to compost windrows for composting.

3.9.2 Land-clearing debris (tree stumps, tree limbs etc.)

Station 1- Drop off area for land-clearing debris to be processed. Station 2- Storage in windrows in reprocessing area. Station 3- Tub grinder area. Station 3- Power screen area. Station 4- Windrows.

3.9.3 Topsoil

Station 1- Soil separation area. Station 3- Power screen with fines from mulch. Station 4- Windrows storage.

3.9.4 Aggregate

Station 1-Drop-off area. Station 2- Reprocessing area for storage. Station 3- Rock crusher .
Station 6- Storage in reprocessing area.

3.10 Measuring and Mixing

The material for outgoing loads is measured by a front-end loader bucket capacity of 2 cubic yards and 4 cubic yards.

3.11 Process Duration

The process duration from the time loaded in conveyor to finished product is the same for all compost, mulch, and soil product types. Each product is transferred to the appropriate storage area. Placing in windrows after screening further refines the compost product. The compost windrows are turned for aeration once to twice monthly. The compost remains in windrows for approximately 3 to 6 months.

3.12 Temperature Monitoring

The temperature is monitored monthly on all compost windrows. For compost windrows that have been in storage for 30 days or longer, the temperature is monitored weekly. The temperature probes will be placed in the compost to measure and document temperature generations. The recorded temperature will be used to ensure that the minimum 131 degrees for three days are maintained for the compost. If the recorded temperature falls below the 131 degrees specified, the required pathogen testing for the compost (in accordance with Appendix B of .1400) will be performed every 6 months or 20,000 yards.

The procedure for temperature monitoring is random testing of all stored compost in windrows at the frequencies mentioned above. Every compost windrow will be monitored with a compost thermometer, which has a 48-inch probe to ensure that all areas inside the windrow can be measured. Each probe measurement will be obtained every 50 linear feet of windrow using the full extent of the probe. Each probe will be monitored for a period of approximately five minutes or until the temperature has stabilized. Each monitoring event will be recorded on a monitoring chart. The probe will be checked twice daily at the same location for temperature recordation.

3.13 Temperature Control

Windrow turning is performed for the compost once to twice monthly by turning the compost windrows with a front-end loader. If temperatures for the compost windrows are falling below the required minimum131 degrees for three days, additional windrow turning will be performed.

In addition to windrow turning, mixing of grass clippings with the wood chips and leaves will enhance biodegradation. If additional turning does not brign temperatures to the desired range, ammonium nitrate may be added to enhance biodegradation.

3.14 Quality Assurance Plan

All products are to be inspected weekly by the Operations Manager for size and quality before each product type is transferred to the windrows. If proper mixing or sizing is not maintained during the screening process, the material is screened a second time to ensure quality. Inspection records shall be kept on file.

Monthly temperature monitoring data shall be kept on file. As discussed above, the recorded temperature will be used to ensure that the minimum 131 degrees are maintained for the compost. If the recorded temperature falls below the 131 degrees specified, pathogen testing for the compost (in accordance with Appendix B of .1400) will be performed every 6 months or 20,000 yards. All laboratory data sheets shall be kept on file.

All permits shall be maintained at the main office/check station for compliance.

All processing equipment shall be periodically inspected in accordance with the O&M Manuals. Inspection logs shall be kept on file.

3.16 Contingency Plan

In the event of on-site equipment failure or a temporary shut down of the facility, incoming material loads shall be stockpiled in the drop off area. Overflow stockpiling is available on the Phase 2 C&D landfill area.

No open burning of material is permitted at the site. Equipment and stockpiled soil shall be provided to control accidental fires. Any fire that occurs at the facility shall be reported to the Division of Waste Management within 24 hours, and the Operations Manager shall submit written notification within 15 days.

If a fire occurs at the facility, the local fire department (Apex Volunteer Fire Department and Rescue Station located 4 miles from the landfill) shall be notified. Hot loads that are brought in are to be immediately dumped away from the facility and the fire department is to be called. The hot

load shall be sprayed down with water until the fire or combustion is extinguished. The load is then to be reloaded for disposal in the landfill. The Town of Apex Volunteer Fire Department and Rescue has been notified of our intent to operate this reprocessing facility. They have agreed to respond to a fire if one were to occur at the site. (See letter attached from Town of Apex Fire Department in Appendix 2.

3.17 Erosion/Sedimentation Control

Erosion/sedimentation control structures include sediment basins and diversion ditches. Sediment basins shall be checked after rainfall events. Sediment shall be removed from the basin to its original dimensions when sediment accumulates to one half of the design depth. The sediment basins, embankments, spillways and outlets shall also be inspected for erosion damage. All necessary repairs shall be made immediately. Any trash or debris within the sediment basin riser shall be removed.

Diversion ditches shall be inspected for damage after each runoff event. Riprap-lined channels and outlet protection used to prevent damage to channel vegetation shall be inspected for wash-outs. Riprap shall be added to these areas as needed to maintain the integrity of the structure.

Seeding, fertilizing and mulching shall be in accordance with the seeding specifications and the North Carolina Erosion and Sedimentation Control Guidelines.

3.18 Surface Water Diversion

Surface water run-on shall be diverted away from the operational, composting, and storage areas by the use of diversion berms or channels.

3.19 Leachate Management

Based upon the design of the facility and the type of material, leachate is not created at the facility. Ponding of surface water at the base of the material shall be prohibited.

3.20 Access and Security Requirements

The site has controlled access with the use of entrance gates. A security check station is located at the facility entrance to evaluate the incoming material for reprocessing or disposal. An attendant is on duty at the site at all times while the facility is open for public use to assure compliance with operational requirements. The remainder of the site has wooded buffer zones that prohibit vehicular traffic. Access roads to the site shall be of all weather construction and maintained in good condition.

3.21 Waste Acceptance

The site shall accept only those solid wastes that it is permitted to receive.

3.22 Safety Requirements

No open burning of solid waste is allowed. As discussed above, equipment shall be provided to control accidental fires. On-site earth moving equipment is available for fire control. As mentioned previously, the Apex Volunteer Fire Department has agreed to respond to a fire at this facility. On-site personnel shall be trained in site specific safety, remedial, and corrective action procedures.

3.23 Signs

Signs providing information on drop off procedures, the hours that the site is open for public use, the permit number, statement that no hazardous or unauthorized waste can be received, and other pertinent information will be posted at the site entrance. Traffic signs and markers will be provided as necessary to promote an orderly traffic pattern to and from the drop off area and maintain efficient operating conditions.

- The facility name, address, and permit number,
- The total quantity in tons, with sludge values expressed in dry weight, and type of waste received at the facility during the year covered by the report, including tons of waste received from local government of origin,
- The total quantity in tons, with sludge values expressed in dry weight, and type of waste processed into compost during the year covered by the report,
- The total quantity in tons and type of compost produced at the facility, by product classification, during the year covered by the report,
- The total quantity in tons and type of compost removed for use or disposal from the facility, by product classification, along with a general description of market if for use during the year covered by the report,
- Monthly temperature monitoring to support Rule .1406, and
- Results of test required in Table 3 of Rule .1408 (not applicable to Type 1 Facility).

Annual totals of solid waste received and composted shall be reported back to the local government of origin for annual recycling reporting.

- The facility name, address, and permit number,
- The total quantity in tons, with sludge values expressed in dry weight, and type of waste received at the facility during the year covered by the report, including tons of waste received from local government of origin,
- The total quantity in tons, with sludge values expressed in dry weight, and type of waste processed into compost during the year covered by the report,
- The total quantity in tons and type of compost produced at the facility, by product classification, during the year covered by the report,
- The total quantity in tons and type of compost removed for use or disposal from the facility, by product classification, along with a general description of market if for use during the year covered by the report,
- Monthly temperature monitoring to support Rule .1406, and
- Results of test required in Table 3 of Rule .1408 (not applicable to Type 1 Facility).

Annual totals of solid waste received and composted shall be reported back to the local government of origin for annual recycling reporting.

APPENDIX 1

Site Plan

Erosion & Sediment Control Permit

Storm Water Discharge Permit

Geotechnical Data Table

Soil Test Boring Records

Property Deed

APPROVED
DIVISION OF WASTE MANAGEMENT
SOLID WASTE SECTION
DATE 12/27/02 BY TL
MOD. #1
92-30
CENTRAL FILE COPY

HWY 55 TYPE 1 REPROCESSING FACILITY APPLICATION WAKE COUNTY, NC

SCANNED 3/13/14 Carver Johnson

Prepared For:

NCDENR
Division of Waste Management
Raleigh, North Carolina

Prepared By:

PATTERSON BREWER & Associates
Engineering • Surveying • Planning

P.O. Box 1387
Mooresville, NC 28115

WAKE COUNTY DEPARTMENT OF ENVIRONMENTAL SERVICES WELL AND SEWAGE SITE LOCATION PERMIT

11X
TEL 919 856 7449
FAX 919 856 5855

WAKE COUNTY NORTH CAROLINA
Environmental Services

Erosion, Flood and Stormwater
336 Fayetteville St. • P.O. Box 550 • Raleigh, NC 27602

Mike L Griffin
19109-118 W Catawba Avenue
Cornelius North Carolina 28031
Phone #: 704/895-0329
Fax #: 704/896-2960
ATTN: Mr Mike L Griffin

RE: Sedimentation & Erosion Control Letter of Approval, 06/26/02

Project Name: Hwy 55 C&D Landfill, LLC	Submitted By: Patterson, Brewer & Associates, P.A.
Project #: 02-04-10	128 Overhill Road Suite 105
Date Received: 04/12/02	Morrisville North Carolina 28115
Date Processing Initiated: 04/16/02	Phone #: 919/662-0100 Fax #: 919/662-0101
Disturbed Acres: 18	Submittal ☒ Revision ☐
Plan Review Fee: $2,500.00	
Land Disturbance Fee: $2,500.00	Watershed: : Neuse River Basin-1, 03-04-01

Dear Mr Mike L Griffin:

This office has reviewed the subject Erosion and Sedimentation Control Plan. We find the plan to be acceptable and hereby issue this letter or approval. If any modifications, performance reservations, or recommendation are applicable, a list is enclosed and is incorporated as a part of this letter of approval. If any modifications are not incorporated into the plan and implemented in the field, the site will be in violation of the Erosion and Sedimentation Control Ordinance of Wake County. ***In addition, Effective July 1, 2000 all projects issued Land-Disturbing Permits will have Article II Section 5(2) 5 (3), (4),(5) and (6) of the Ordinance applied. It should be noted that this plan approval shall expire two (2) years following the date of approval in accordance with Section 5.PERMITS, of the Ordinance. In summary permits over 2 years old may need to be renewed to avoid substantial civil penalties. For details consult the Erosion & Sedimentation Control Ordinance.***

Plan Approval is limited to construction, maintenance and stabilization of both temporary and permanent sedimentation and erosion control devices only. Wake County Erosion, Flood and Stormwater Section is not responsible for subject approvals of other Local, State or Federal Agencies. The subject approvals are (but not limited to) Federal Emergency Management Area Flood regulations/requirements, Division of Water Quality under stormwater or other water quality regulations/requirements, U.S. Army Corps of Engineers under Article 404 (Wetlands) jurisdiction/requirements, and/or any Federal, State, County and Local municipal regulations or permit requirements. The approval issued in this letter cannot supersede any other required permit or approval.

Project Modifications Include:

1. See, Follow and Address the Attached NPDES Permit for Projects with Over 5 Acres of Disturbed Area.
2. Riser Removal Proceedure's Must Be Submitted to this Office Prior to Issuance of Certificate of Compliance for this Project.
3. Project Modifications Include the Attached Riser Basins Weir Lengths on Sheet C3.

Since this project disturbs five or more acres, one such approval relates to the Stormwater that will discharge from your project. This runoff is permitted pursuant to the National Pollutant Discharge Elimination

System (NPDES) administered in North Carolina by the Division of Water Quality (DWQ). Attached is the General Stormwater NPDES Permit, NCG01000, as revised October 1, 2001, covering your activity. You are responsible for complying with the General Permit requirements and are subject to enforcement by DWQ for any violations of the General Permit.

Wake County's sedimentation pollution control program is performance oriented, requiring protection of the natural resources and adjoining properties. If at any time during this project it is determined that the Erosion and Sedimentation Control Plan is inadequate to meet the requirements of the Erosion and Sedimentation Control Ordinance of Wake County , this office may require revisions in the plan and its implementation to ensure compliance with the Ordinance. Also, please consider this letter as notice in accordance with the requirements for Approval of Plans, Section 4(8), this office may require revisions in the plan and its implementation to ensure compliance with the Ordinance.

Please note that this approval is based in part on the accuracy of the information provided concerning financial responsibility. You are requested to file an amended Financial Responsibility Form if any changes become necessary.

Your cooperation is appreciated and we look forward to working with you on this project. If there are any questions, please do not hesitate to contact this office.

Sincerely,

Lee R. Squires, P.E., 856-6199
Environmental Engineer/Planner I

cc:Patterson, Brewer & Associates
Mr. John Dorney, P.E.
Mr. Ken Schuster, P.E.

Permit No. NCG010000

STATE OF NORTH CAROLINA
DEPARTMENT OF ENVIRONMENT, HEALTH, AND NATURAL RESOURCES
DIVISION OF ENVIRONMENTAL MANAGEMENT

GENERAL PERMIT

TO DISCHARGE STORMWATER UNDER THE

NATIONAL POLLUTANT DISCHARGE ELIMINATION SYSTEM

In compliance with the provision of North Carolina General Statute 143-215.1, other lawful standards and regulations promulgated and adopted by North Carolina Environmental Management Commission and the Federal Water Pollution Control Act as amended,

---

All owners or operators of stormwater point source discharges associated with construction activities including clearing, grading and excavation activities resulting in the disturbance of land are hereby authorized to discharge stormwater to the surface waters of North Carolina or to a separate storm sewer system conveying stormwater to the surface waters.

The General Permit shall become effective on July 1, 1995.

The General Permit shall expire at midnight on June 30, 2000.

Signed this day June 30, 1995.

A. Preston Howard, Jr., P.E., Director
Division of Environmental Management
By the Authority of the Environmental Management Commission

PERMITTED ACTIVITIES

Until this permit expires or is modified or revoked, the permittee is authorized to discharge stormwater which has been adequately treated and managed in accordance with an approved Sedimentation and Erosion Control Plan by the North Carolina Division of Land Resources, Land Quality Section, or a delegated local program under the provisions and requirements of North Carolina General Statute 113A - 54.1 to the surface waters of North Carolina or to a separate storm sewer system. All discharges shall be in accordance with the attached schedules as follows:

Part I: Monitoring, Controls, and Limitations for Permitted Discharges

Part II: Standard Conditions for NPDES Stormwater General Permits

Any other point source discharge to surface waters of the state is prohibited unless covered by another permit, authorization or approval.

This permit does not relieve the permittee from responsibility for compliance with any other applicable federal, state, or local law, rule, standard, ordinance, order, judgment, or decree.

General Permit Coverage

Coverage under this General Permit shall become effective upon issuance of an approval for the Sedimentation and Erosion Control Plan by the Land Quality Section of the Division of Land Resources or delegated local program. Prior to the commencement of construction and land disturbing activities approval of the Sedimentation and Erosion Control Plan shall be obtained.

Any owner or operator not wishing to be covered or limited by this General Permit may make application for an individual NPDES permit in accordance with NPDES procedures in 15A NCAC 2H .0100, stating the reasons supporting the request. Any application for an individual permit should be made at least 180 days prior to the time the permit is needed.

This General Permit does not cover activities or discharges covered by an individual NPDES permit until the individual permit has expired or has been rescinded. Any person conducting an activity covered by an individual permit but which could be covered by this General Permit may request that the individual permit be rescinded and coverage under this General Permit be provided.

PART I

MONITORING, CONTROLS, AND LIMITATIONS FOR PERMITTED DISCHARGES

SECTION A: FINAL LIMITATIONS AND CONTROLS FOR STORMWATER DISCHARGES

During the period beginning on the effective date of the permit and lasting until expiration, the Permittee is authorized to discharge stormwater associated with industrial activity. Such discharges shall be controlled, limited and monitored as specified below.

1. Prior to the commencement of construction, the permittee shall submit for approval a Sedimentation and Erosion Control Plan (plan) to the Department of Environment, Health, and Natural Resources, Division of Land Resources, Land Quality Section, (or an approved local program) pursuant to the requirements of NC G.S. 113A-54.1 and in conformity with rules adopted by the Sedimentation and Erosion Control Commission.

2. The Permittee shall implement the plan, which has been approved by the approval authority. The approved plan is considered a requirement or condition of this general permit. Deviation from the approved plan, or approved amendment to the plan, shall constitute a violation of the terms and conditions of this general permit except that deviation from the approved plan will be allowed to correct an emergency situation where sediments are being discharged off the site, even though the approved plan is in effect. Such a deviation from the approved plan shall be noted on the approved plan maintained at the job site. A signed copy of the approved plan shall be maintained on the site at all times.

3. Equipment utilized during the construction activity on a site must be operated and maintained in such a manner as to prevent the potential or actual pollution of the surface or ground waters of the state. Fuels, lubricants, coolants, and hydraulic fluids, or any other petroleum products, shall not be discharged onto the ground or into surface waters. Spent fluids shall be disposed of in a manner so as not to enter the waters, surface or ground, of the state and in accordance with applicable state and federal disposal regulations. Any spilled fluids shall be cleaned up to the extent practicable and disposed of in a manner so as not to allow their entry into the waters, surface or ground, of the state.

4. Herbicide, pesticide, and fertilizer usage during the construction activity shall be restricted to those materials approved by EPA and shall be in accordance with label restrictions.

5. All wastes composed of building materials shall be disposed of in accordance with North Carolina General Statutes, Chapter 130A, Article 9 - Solid Waste Management, and rules governing the disposal of solid waste (North Carolina Administrative Code Section 15A NCAC 13B).

SECTION B: MINIMUM MONITORING AND REPORTING REQUIREMENTS

Minimum monitoring and reporting requirements are as follows unless otherwise approved in writing by the Director of the Division of Environmental Management.

1. All sedimentation and erosion control facilities shall be inspected by or under the direction of the permittee at least once every seven calendar days and within 24 hours after any storm event of greater that 0.5 inches of rain per 24 hour period.

2. Stormwater runoff discharges shall be inspected by observation for stormwater discharge characteristics as defined below at the above frequency to evaluate the effectiveness of the pollution control facilities or practices. If any visible off-site sedimentation is leaving the site, corrective action shall be taken to reduce the discharge of sediments.

Stormwater Discharge Characteristics	Monitoring Type[1]	Monitoring Location[2]
Color		SDO
Odor		SDO
Clarity		SDO
Floating Solids		SDO
Suspended Solids		SDO
Foam		SDO
Oil Sheen		SDO
Other obvious indicators of stormwater pollution		SDO

Footnotes:

1 Monitoring Type: The monitoring requires a qualitative observation of each stormwater outfall. No analytical testing or sampling is required.

2 Sample Location: Stormwater Discharge Outfall (SDO)

3. The operator shall keep a record of inspections. Visible sedimentation found off the site shall be recorded with a brief explanation as to the measures taken to prevent future releases as well as any measures taken to clean up the sediment that has left the site. This record shall be made available to DEM or authorized agent upon request.

SECTION C: SCHEDULE OF COMPLIANCE

1. The permittee shall comply with Final Limitations and Controls specified for stormwater discharges by the effective date of the permit unless specified below.

2. Permittee shall at all times provide the operation and maintenance necessary to operate the permitted stormwater controls at optimum efficiency.

PART II
STANDARD CONDITIONS FOR NPDES STORMWATER GENERAL PERMITS

SECTION A: DEFINITIONS

1. Act or "the Act" or CWA

   The Federal Water Pollution Control Act, also known as the Clean Water Act, as amended, 33 USC 1251, et. seq.

2. Best Management Practices (BMPs)

   Schedules of activities, prohibitions of practices, maintenance procedures, and other management practices to prevent or reduce the pollution of waters of the United States. BMPs also include treatment requirements, operation procedures, and practices to control plant site runoff, spillage or leaks, sludge or waste disposal, or drainage from raw material storage.

3. DEM or Division

   The Division of Environmental Management, Department of Environment, Health and Natural Resources.

4. Director

   The Director of the Division of Environmental Management, the permit issuing authority.

5. EMC

   The North Carolina Environmental Management Commission.

6. Landfill

   A disposal facility or part of a disposal facility where waste is placed in or on land and which is not a land treatment facility, a surface impoundment, an injection well, a hazardous waste long-term storage facility or a surface storage facility.

7. Overburden

   Any material of any nature, consolidated or unconsolidated, that overlies a mineral deposit, excluding topsoil or similar naturally-occurring surface materials that are not disturbed by mining operations.

8. Permittee

   The person who signed as the financially responsible party on the Sedimentation and Erosion Control Plan.

9. Point Source Discharge

Any discernible, confined and discrete conveyance, including but specifically not limited to, any pipe, ditch, channel, tunnel, conduit, well, discrete fissure, container, rolling stock, or concentrated animal feeding operation from which pollutants are or may be discharged to waters of the state.

10. Representative Storm Event

A storm event that measures greater than 0.1 inches of rainfall and that is preceded by at least 72 hours during which no storm event measuring greater than 0.1 inches has occurred. A single storm event may contain intervals of up to 10 consecutive hours of no precipitation. For example, if it rains for 2 hours without producing any collectable discharge, and then stops, a sample may be collected if a rain producing a discharge begins again with the next 10 hours.

SECTION B: GENERAL CONDITIONS

1. Duty to Comply

The permittee must comply with all conditions of this general permit. Any permit noncompliance constitutes a violation of the Clean Water Act and is grounds for enforcement action; for certificate of coverage termination, revocation and reissuance, or modification; or denial of a certificate of coverage renewal application.

a. The permittee shall comply with effluent standards or prohibitions established under section 307(a) of the Clean Water Act for toxic pollutants within the time provided in the regulations that establish these standards or prohibitions, even if the permit has not yet been modified to incorporate the requirement.

b. The Clean Water Act provides that any person who violates a permit condition is subject to a civil penalty not to exceed $25,000 per day for each violation. Any person who negligently violates any permit condition is subject to criminal penalties of $2,500 to $25,000 per day of violation, or imprisonment for not more than 1 year, or both. Any person who knowingly violates permit conditions is subject to criminal penalties of $5,000 to $50,000 per day of violation, or imprisonment for not more than 3 years, or both. Also, any person who violates a permit condition may be assessed an administrative penalty not to exceed $10,000 per violation with the maximum amount not to exceed $125,000. [Ref: Section 309 of the Federal Act 33 USC 1319 and 40 CFR 122.41(a).]

c. Under state law, a daily civil penalty of not more than ten thousand dollars ($10,000) per violation may be assessed against any person who violates or fails to act in accordance with the terms, conditions, or requirements of a permit. [Ref: North Carolina General Statutes 143-215.6A]

d. Any person may be assessed an administrative penalty by the Administrator for violating section 301, 302, 306, 307, 308, 318, or 405 of the Act, or any permit condition or limitation implementing any of such sections in a permit issued under section 402 of the Act. Administrative penalties for Class I violations are not to exceed $10,000 per violation, with the maximum amount of any Class I penalty assessed not to exceed $25,000. Penalties for Class II violations are not to exceed $10,000 per day for each day during

which the violation continues, with the maximum amount of any Class II penalty not to exceed $125,000.

2. Duty to Mitigate

The permittee shall take all reasonable steps to minimize or prevent any discharge in violation of this general permit which has a reasonable likelihood of adversely affecting human health or the environment.

3. Civil and Criminal Liability

Except as provided in general permit conditions on "Bypassing" (Part II, C.3.), nothing in this general permit shall be construed to relieve the permittee from any responsibilities, liabilities, or penalties for noncompliance pursuant to NCGS 143-215.3, 143-215.6A, 143-215.6B, 143-215.6C or Section 309 of the Federal Act, 33 USC 1319. Furthermore, the permittee is responsible for consequential damages, such as fish kills, even though the responsibility for effective compliance may be temporarily suspended.

4. Oil and Hazardous Substance Liability

Nothing in this general permit shall be construed to preclude the institution of any legal action or relieve the permittee from any responsibilities, liabilities, or penalties to which the permittee is or may be subject to under NCGS 143-215.75 et seq. or Section 311 of the Federal Act, 33 USC 1321. Furthermore, the permittee is responsible for consequential damages, such as fish kills, even though the responsibility for effective compliance may be temporarily suspended.

5. Property Rights

The issuance of this general permit does not convey any property rights in either real or personal property, or any exclusive privileges, nor does it authorize any injury to private property or any invasion of personal rights, nor any infringement of Federal, State or local laws or regulations.

6. Severability

The provisions of this general permit are severable, and if any provision of this general permit, or the application of any provision of this general permit to any circumstances, is held invalid, the application of such provision to other circumstances, and the remainder of this general permit, shall not be affected thereby.

7. Duty to Provide Information

The permittee shall furnish to the Director, within a reasonable time, any information which the Director may request to determine whether cause exists for modifying, revoking and reissuing, or terminating the certificate of coverage issued pursuant to this general permit or to determine compliance with this general permit. The permittee shall also furnish to the Director upon request, copies of records required to be kept by this general permit.

8. Continuation of the Expired General Permit

An expired general permit continues in force and effect until the general permit is reissued or a new general permit is issued. Only those facilities authorized to discharge under the expiring general permit are covered by the continued general permit.

9. General Permit Termination

After public notice and opportunity for a hearing, the general permit may be terminated for cause. The filing of a request for a general permit modification, revocation and reissuance, or termination does not stay any general permit condition. The certificate of coverage shall expire when the general permit is terminated.

10. When an Individual Permit may be Required

The Director may require any owner/operator authorized to discharge under a certificate of coverage issued pursuant to this general permit to apply for and obtain an individual permit or an alternative general permit. Any interested person may petition the Director to take action under this paragraph. Cases where an individual permit may be required include, but are not limited to, the following:

a. The discharger is a significant contributor of pollutants;

b. Conditions at the permitted site change, altering the constituents and/or characteristics of the discharge such that the discharge no longer qualifies for a General Permit;

c. The discharge violates the terms or conditions of this general permit;

d. A change has occurred in the availability of demonstrated technology or practices for the control or abatement of pollutants applicable to the point source;

e. Effluent limitations are promulgated for the point sources covered by this general permit;

f. A water quality management plan containing requirements applicable to such point sources is approved after the issuance of this general permit.

g. The Director determines at his own discretion that an individual permit is required.

11. When an Individual Permit may be Requested

Any permittee operating under this general permit may request to be excluded from the coverage of this general permit by applying for an individual permit. When an individual permit is issued to an owner/operator the applicability of this general permit is automatically terminated on the effective date of the individual permit.

12. Signatory Requirements

a. All applications, reports, or information submitted to the Director shall be signed and certified as follows:

(1) For a corporation: by a responsible corporate officer. For the purpose of this Section, a responsible corporate officer means: (a) a president, secretary, treasurer or vice president of the corporation in charge of a principal business function, or any other person who performs similar policy or decision making functions for the corporation, or (b) the manager of one or more manufacturing production or operating facilities employing more than 250 persons or having gross annual sales or expenditures exceeding 25 million (in second quarter 1980 dollars), if authority

to sign documents has been assigned or delegated to the manager in accordance with corporate procedures.

(2) For a partnership or sole proprietorship: by a general partner or the proprietor, respectively; or

(3) For a municipality, State, Federal, or other public agency: by either a principal executive officer or ranking elected official.

b. All reports required by the general permit and other information requested by the Director shall be signed by a person described above or by a duly authorized representative of that person. A person is a duly authorized representative only if:

(1) The authorization is made in writing by a person described above;

(2) The authorization specified either an individual or a position having responsibility for the overall operation of the regulated facility or activity, such as the position of plant manager, operator of a well or well field, superintendent, a position of equivalent responsibility, or an individual or position having overall responsibility for environmental matters for the company. (A duly authorized representative may thus be either a named individual or any individual occupying a named position.); and

(3) The written authorization is submitted to the Director.

c. Any person signing a document under paragraphs a. or b. of this section shall make the following certification:

"I certify, under penalty of law, that this document and all attachments were prepared under my direction or supervision in accordance with a system designed to assure that qualified personnel properly gather and evaluate the information submitted. Based on my inquiry of the person or persons who manage the system, or those persons directly responsible for gathering the information, the information submitted is, to the best of my knowledge and belief, true, accurate, and complete. I am aware that there are significant penalties for submitting false information, including the possibility of fines and imprisonment for knowing violations."

13. General Permit Modification, Revocation and Reissuance, or Termination

The issuance of this general permit does not prohibit the Director from reopening and modifying the general permit, revoking and reissuing the general permit, or terminating the general permit as allowed by the laws, rules, and regulations contained in Title 40, Code of Federal Regulations, Parts 122 and 123; Title 15A of the North Carolina Administrative Code, Subchapter 2H .0100; and North Carolina General Statute 143-215.1 et. al.

SECTION C: OPERATION AND MAINTENANCE OF POLLUTION CONTROLS

1. Proper Operation and Maintenance

The permittee shall at all times properly operate and maintain all facilities and systems of treatment and control (and related appurtenances) which are installed or used by the permittee to achieve compliance with the conditions of this general permit. Proper operation and maintenance also includes adequate laboratory controls and appropriate quality assurance procedures. This provision requires the operation of back-up or auxiliary facilities or similar systems which are installed by a permittee only when the operation is necessary to achieve compliance with the conditions of the general permit.

2. Need to Halt or Reduce not a Defense

It shall not be a defense for a permittee in an enforcement action that it would have been necessary to halt or reduce the permitted activity in order to maintain compliance with the condition of this general permit.

3. Bypassing of Stormwater Control Facilities

a. Definitions

(1) "Bypass" means the known diversion of stormwater from any portion of a stormwater control facility including the collection system, which is not a designed or established or operating mode for the facility.

(2) "Severe property damage" means substantial physical damage to property, damage to the control facilities which causes them to become inoperable, or substantial and permanent loss of natural resources which can reasonably be expected to occur in the absence of a bypass. Severe property damage does not mean economic loss caused by delays in production.

b. Bypass Not Exceeding Limitations.

The permittee may allow any bypass to occur which does not cause effluent limitations to be exceeded, but only if it also is for essential maintenance to assure efficient operation. These bypasses are not subject to the provisions of Paragraphs c. and d. of this section.

c. Notice

(1) Anticipated bypass. If the permittee knows in advance of the need for a bypass, it shall submit prior notice, if possible at least ten days before the date of the bypass; including an evaluation of the anticipated quality and affect of the bypass.

(2) Unanticipated bypass. The permittee shall submit notice within 24 hours of an unanticipated bypass as required in Part II, E. 5. of this general permit. (24-hour notice).

d. Prohibition of Bypass

Bypass is prohibited and the Director may take enforcement action against a permittee for bypass, unless:

(1) Bypass was unavoidable to prevent loss of life, personal injury or severe property damage;

(2) There were no feasible alternatives to the bypass, such as the use of auxiliary control facilities, retention of stormwater or maintenance during normal periods of equipment downtime or dry weather. This condition is not satisfied if adequate backup controls should have been installed in the exercise of reasonable engineering judgment to prevent a bypass which occurred during normal periods of equipment downtime or preventive maintenance; and

(3) The permittee submitted notices as required under Paragraph c. of this section.

The Director may approve an anticipated bypass, after considering its adverse effects, if the Director determines that it will meet the three conditions listed above in Paragraph d. of this section.

4. Upsets

a. Definition

"Upset " means an exceptional incident in which there is unintentional and temporary noncompliance with technology based permit effluent limitations because of factors beyond the reasonable control of the permittee. An upset does not include noncompliance to the extent caused by operational error, improperly designed treatment or control facilities, inadequate treatment or control facilities, lack of preventive maintenance, or careless or improper operation.

b. Effect of an Upset.

An upset constitutes an affirmative defense to an action brought for noncompliance with technology based permit effluent limitations if the requirements of paragraph c. of this condition are met. No determination made during administrative review of claims that noncompliance was caused by upset, and before an action for noncompliance, is final administrative action subject to judicial review.

c. Conditions Necessary for a Demonstration of Upset

A permittee who wishes to establish the affirmative defense of upset shall demonstrate, through properly signed, contemporaneous operating logs, or other relevant evidence that:

(1) An upset occurred and that the permittee can identify the cause(s) of the upset;

2) The permitted facility was at the time being properly operated; and

(3) The permittee submitted notice of the upset as required in Part II, E. 5. (b) (B) of this general permit.

(4) The permittee complied with any remedial measures required under Part II, A. 2. of this general permit.

d. Burden of Proof

In any enforcement proceeding the permittee seeking to establish the occurrence of an upset has the burden of proof.

SECTION D: MONITORING AND RECORDS

1. Representative Sampling

Samples collected and measurements taken, as required herein, shall be characteristic of the volume and nature of the permitted discharge. Samples shall be taken on a day and time that is characteristic of the discharge. All samples shall be taken before the discharge joins or is diluted by any other waste stream, body of water, or substance. Monitoring points shall not be changed without notification to and approval of the Director.

2. Reporting

Duplicate signed copies of all reports required herein, shall be submitted to the following address:

Division of Environmental Management
Water Quality Section
ATTENTION: Central Files
Post Office Box 29535
Raleigh, North Carolina 27626-0535

3. Flow Measurements

Where required, appropriate flow measurement devices and methods consistent with accepted scientific practices shall be selected and used to ensure the accuracy and reliability of measurements of the volume of monitored discharges.

4. Test Procedures

Test procedures for the analysis of pollutants shall conform to the EMC regulations published pursuant to NCGS 143-215.63 et. seq., the Water and Air Quality Reporting Acts, and to regulations published pursuant to Section 304(g), 33 USC 1314, of the Federal Water Pollution Control Act, as Amended, and Regulation 40 CFR 136.

To meet the intent of the monitoring required by this general permit, all test procedures must produce minimum detection and reporting levels that are below the general permit discharge requirements and all data generated must be reported down to the minimum detection or lower reporting level of the procedure. If no approved methods are determined capable of achieving minimum detection and reporting levels below general permit discharge requirements, then the most sensitive (method with the lowest possible detection and reporting level) approved method must be used.

5. Penalties for Tampering

The Clean Water Act provides that any person who falsifies, tampers with, or knowingly renders inaccurate, any monitoring device or method required to be maintained under this general permit shall, upon conviction, be punished by a fine of not more than $10,000 per violation, or by imprisonment for not more than two years per violation, or by both. If a conviction of a person is for a violation committed after a first conviction of such person under this paragraph, punishment is a fine of not more that $20,000 per day of violation, or by imprisonment of not more than 4 years, or both.

6. Records Retention

The permittee shall retain records of all monitoring information, including all calibration and maintenance records and all original strip chart recordings for continuous monitoring instrumentation, copies of all reports required by this general permit, for a period of at least 5 years from the date of the sample, measurement, report or application. This period may be extended by request of the Director at any time.

7. Recording Results

For each measurement, sample, inspection or maintenance activity performed or taken pursuant to the requirements of this general permit, the permittee shall record the following information:

a. The date, exact place, and time of sampling, measurements, inspection or maintenance activity;

b. The individual(s) who performed the sampling, measurements, inspection or maintenance activity;

c. The date(s) analyses were performed;

d. The individual(s) who performed the analyses;

e. The analytical techniques or methods used; and

f. The results of such analyses.

8. Inspection and Entry

The permittee shall allow the Director, or an authorized representative (including an authorized contractor acting as a representative of the Director), or in the case of a facility which discharges through a municipal separate storm sewer system, an authorized representative of a municipal operator or the separate storm sewer system receiving the discharge, upon the presentation of credentials and other documents as may be required by law, to;

a. Enter upon the permittee's premises where a regulated facility or activity is located or conducted, or where records must be kept under the conditions of this general permit;

b. Have access to and copy, at reasonable times, any records that must be kept under the conditions of this general permit;

c. Inspect at reasonable times any facilities, equipment (including monitoring and control equipment), practices, or operations regulated or required under this general permit; and

d. Sample or monitor at reasonable times, for the purposes of assuring general permit compliance or as otherwise authorized by the Clean Water Act, any substances or parameters at any location.

SECTION E: REPORTING REQUIREMENTS

1. Planned Changes

The permittee shall give notice to the Director as soon as possible of any planned physical alterations or additions to the permitted facility. Notice is required only when:

a. The alteration or addition to a permitted facility may meet one of the criteria for determining whether a facility is a new source in 40 CFR Part 122.29 (b); or

b. The alteration or addition could significantly change the nature or increase the quantity of pollutants discharged. This notification applies to pollutants which are subject neither to effluent limitations in the general permit, nor to notification requirements under 40 CFR Part 122.42 (a) (l).

2. Anticipated Noncompliance

The permittee shall give advance notice to the Director of any planned changes in the permitted facility or activity which may result in noncompliance with the general permit requirements.

3. Transfers

The certificate of coverage issued pursuant to this general permit is not transferable to any person except after notice to and approval by the Director. The Director may require modification or revocation and reissuance of the certificate of coverage to change the name and incorporate such other requirements as may be necessary under the Clean Water Act.

4. Monitoring Reports

Monitoring results shall be reported at the intervals specified in Part I of this general permit.

5. Twenty-four Hour Reporting

a. The permittee shall report to the central office or the appropriate regional office any noncompliance which may endanger health or the environment. Any information shall be provided orally within 24 hours from the time the permittee became aware of the circumstances. A written submission shall also be provided within 5 days of the time the permittee becomes aware of the circumstances.

The written submission shall contain a description of the noncompliance, and its causes; the period of noncompliance, including exact dates and times, and if the noncompliance has not been corrected, the anticipated time it is expected to continue; and steps taken or planned to reduce, eliminate, and prevent reoccurrence of the noncompliance.

b. The following shall be included as information which must be reported within 24 hours under this paragraph:

(1) Any unanticipated bypass which exceeds any effluent limitation in the general permit.

(2) Any upset which exceeds any effluent limitation in the general permit.

(3) Violation of a maximum daily discharge limitation for any of the pollutants listed by the Director in the general permit to be reported within 24 hours.

c. The Director may waive the written report on a case-by-case basis for reports under paragraph b. above of this condition if the oral report has been received within 24 hours.

6. Other Noncompliance

The permittee shall report all instances of noncompliance not reported under Part II. E. 4. and 5. of this general permit at the time monitoring reports are submitted. The reports shall contain the information listed in Part II. E. 5. of this general permit.

7. Other Information

Where the permittee becomes aware that it failed to submit any relevant facts in a notice of intent to be covered under this general permit or in any report to the Director, it shall promptly submit such facts or information.

8. Availability of Reports

Except for data determined to be confidential under NCGS 143-215.3(a)(2) or Section 308 of the Federal Act, 33 USC 1318, all reports prepared in accordance with the terms shall be available for public inspection at the offices of the Division of Environmental Management. As required by the Act, effluent data shall not be considered confidential. Knowingly making any false statement on any such report may result in the imposition of criminal penalties as provided for in NCGS 143-215.6B or in Section 309 of the Federal Act.

9. Penalties for Falsification of Reports

The Clean Water Act provides that any person who knowingly makes any false statement, representation, or certification in any record or other document submitted or required to be maintained under this general permit, including monitoring reports or reports of compliance or noncompliance shall, upon conviction, be punished by a fine of not more than $10,000 per violation, or by imprisonment for not more than two years per violation, or by both.

SECTION F: LIMITATIONS REOPENER

This general permit shall be modified or alternatively, revoked and reissued, to comply with any applicable effluent guideline or water quality standard issued or approved under Sections 302(b) (2) (c), and (d), 304(b) (2) and 307(a) of the Clean Water Act, if the effluent guideline or water quality standard so issued or approved:

a. contains different conditions or is otherwise more stringent than any effluent limitation in the general permit; or

b. controls any pollutant not limited in the general permit.

The general permit as modified or reissued under this paragraph shall also contain any other requirements in the Act then applicable.

TABLE 4

GEOTECHNICAL DATA
HIGHWAY 55 C&D LANDFILL, LLC.

SUMMARY OF LABORATORY TEST DATA
Highway 55 C&D Landfill
Wake County, North Carolina
SHIELD Engineering, Inc.

Boring No./ Sample Depth	USCS Classification	% Gravel	% Sand	% Silt	% Clay	Atterburg Limits		Proctor Data		In Situ Conditions				Hydraulic Conductivity k (cm/sec)
						Liquid Limit %	Plasticity Index %	Max Dry Density (pcf)	Optimum Moisture Content (%)	Specific Gravity	Effective Porosity	Dry Density (pcf)	Moisture Content (%)	
MW 25 (5'-7')	SC	10.6	53.5	21.1	14.8	25	10	N/A	N/A	2.681	N/A	N/A	4.3	N/A
MW-25 (16'-17')	CL	3.1	22.7	55.1	19.1	29	9	N/A	N/A	2.691	N/A	N/A	3.8	N/A
MW-26 (3'-5')	CL	0.0	5.4	48.5	46.1	45	21	N/A	N/A	2.618	0.3775	101.7	22.1	7.42E-08
MW 29 (3'-4')	CL	0.3	25.6	49.4	24.7	28	11	N/A	N/A	2.727	0.2595	126	10.1	5.65E-08
SB-1 (3'-5')	SC	5.2	48.1	25.3	21.4	31	9	N/A	N/A	2.608	0.2755	117.9	9.7	9.29E-07
SB-1 (14'-15')	CL	0.1	22.7	54.3	22.9	25	9	N/A	N/A	2.662	N/A	N/A	3.5	N/A
SB-2 (3'-4')	CH	0.2	7.4	36.5	55.9	69	47	N/A	N/A	2.611	N/A	N/A	19.8	N/A
SB-2 (13'-14')	CL	1.2	22.9	45.4	30.5	30	15	N/A	N/A	2.662	N/A	N/A	5.3	N/A
SB-3 (5'-6')	CL	1.3	16.8	38.2	43.7	42	23	N/A	N/A	2.697	*	*	5.9	*
SB-4 (4'-5')	CL	0.1	10.0	47.0	42.9	44	25	N/A	N/A	2.672	N/A	N/A	15.9	N/A
SB-4 (8'-9')	CL	0.5	18.2	45.8	35.5	32	18	N/A	N/A	2.711	N/A	N/A	7.7	N/A
SS-1	CH	1.2	19.7	33.6	45.5	68	43	105.1	16.6	2.606	0.3748	101.7	18.9	2.60E-08
SS-2	CL	1.3	29.3	39.2	30.2	41	22	114.3	13.3	2.608	0.3332	108.5	16.5	1.35E-08
SS-3	CL	11.8	12.9	42.3	33.0	42	23	108.6	17.1	2.642	0.3735	105.3	19.6	2.27E-08

* Sample SB-3 (5-6') too dry to run permeability test.

ENVIRO-PRO, P.C.
Charlotte, North Carolina

LITHOLOGIC LOG

Boring No.: MW-1 Job No: EP-1306
Client: Hwy 55 C&D Landfill, LLC

n: Wake Co. State: NC Total Depth: 75'
TB Soil Sample Method: Split-Spoon Date Started: 9-10-01 Date Complete: 9-10-01
Simmons Drill Method: HSA/Air Rotary Equipment Type: Centerra CT-250 Boring Diameter: 8"/6"
hod: Groundwater (bmp): 0 hrs 24 hrs
evation (LS): 352.85 Measuring Point Elev. (MP): LS Remarks:

Depth ft	SPT/Interval	Sample ID No.	Description	Soil Gas	Moisture	USCS Log	Comments
			Yel-brn. clayey Silt				
5	24,31,32		Rd-brn clayey Silt				
10	48, 50/3"						
15			PWR - Sampled as tan-brn. sandy Silt w/ Rx frag.				
20			Auger Refusal @ 20.5' bgs				
			Air drilled through weathered fanglomerate to 35' bgs				
25							
30							
35			Began 1st Coring Run @ 35' bgs (35.0'-48.2') 36.5'-42.0' - Rd-brn fanglomerate w/ 0.5"-1" metamorphic/igneous rock inclusions				98% Rec. 56% RQD

ENVIRO-PRO, P.C. Charlotte, North Carolina	LITHOLOGIC LOG	Boring No.: MW-1 Job No: EP-1306 Client: Hwy 55 C&D Landfill, LLC

ion: Wake Co. State: NC Total Depth: 75'
TB Soil Sample Method: split-spoon Date Started: 9-10-01 Date Complete: 9-10-01
C. Simmons Drill Method: HSA / Air Rotary Equipment Type: Centerra - RT-250 Boring Diameter: 8"/6"
Method: Groundwater (bmp): 0 hrs 24 hrs
evation (LS): 352.85 Measuring Point Elev. (MP): LS Remarks:

Depth ft.	SPT/Interval	Sample ID No.	Description	Soil Gas	Moisture	USCS Log	Comments
45			44.5'-49.0' - Highly fractured weathered zone				
			Began 2nd Core Run (48.2'-62.6')				99% Rec. 63% RQD
50							
55			53'-59' - 0.25"-1" metamorphic/igneous rock inclusions				
60			61.0'-62.5' - Highly weathered clayey siltstone w/ rock fragments				
			Began 3rd Core Run (62.6'-75.0')				100% Rec. 89% RQD
65			63.5'-67.0' - 0.5"-2" rock inclusions				
70			67'-75' - 0.25"-1" rock inclusions				
75			Terminated Coring @ 75' bgs				

ENVIRO-PRO, P.C.
Charlotte, North Carolina

LITHOLOGIC LOG

Boring No.: MW-9 Job No: EP-1306
Client: Hwy 55 C&D Landfill, LLC

State: NC Total Depth: 50'
Date Started: 9-11-01 Date Complete: 9-11-01
Equipment Type: CanTerra CT-250 Boring Diameter: 8"/6"
Groundwater (bmp): 0 hrs 24 hrs
Remarks:

Soil Sample Method: Split - Spoon
Drill Method: HSA / Air Rotary

Wake Co.
B
Simmons
hod:
evation (LS): 358.35 Measuring Point Elev. (MP): LS

Depth ft.	SPT/Interval	Sample ID No.	Description	Soil Gas	Moisture	USCS Log	Comments
			Yel-brn sl. clayey Silt				
	28,39,50/4"		Rd-brn. clayey Silt				
5							
	50/1"						
10			PWR-Sampled as tan-brn. silty Sand w/ Rx frag.				
15			Auger Refusal @ 17.5' bgs				
20							
25			Rd-brn Fanglomerate				
30							
50			Terminated Air Drilling @ 50' bgs				

NVIRO-PRO, P.C.
Charlotte, North Carolina

LITHOLOGIC LOG

Boring No.: MW-10 Job No: EP-1306
Client: Hwy 55 C&D Landfill, LLC

: Lake Co. State: NC Total Depth: 40'
B Soil Sample Method: Split-Spoon Date Started: 9-12-01 Date Complete: 9-12-01
Simmons Drill Method: HSA/Air Rotary Equipment Type: Centerra CT-250 Boring Diameter: 8"/6"
od: Groundwater (bmp): 0 hrs 24 hrs
evation (LS): 348.87 Measuring Point Elev. (MP): LS Remarks:

Depth ft	SPT/Interval	Sample ID No.	Description	Soil Gas	Moisture	USCS Log	Comments
5	12,16,24		Yel-brn clayey Silt				
0	30,50/1"		PWR - Sampled as Tan-rd brn. sl. clayey sandy Silt w/ Rx frag.				
5			Auger Refusal @ 17' bgs				
			Switched to Air Rotary				
20							
25			Rd-brn Fanglomerate				
30							
40			Terminated Air Drilling @ 40' bgs				

ENVIRO-PRO, P.C.
Charlotte, North Carolina

LITHOLOGIC LOG

Boring No.: MW-21 Job No: EP-1306
Client: Hwy 55 C&D Landfill, LLC

n: Wake Co. State: NC Total Depth: 55
TB Soil Sample Method: Split-Spoon Date Started: 9-14-01 Date Complete: 9-14-01
Simmons Drill Method: HSA/Air Rotary Equipment Type: Centerra CT-250 Boring Diameter: 8"/6"
thod: Groundwater (bmp): 0 hrs 24 hrs
levation (LS): 351.07 Measuring Point Elev. (MP): LS Remarks:

Depth ft.	SPT/Interval	Sample ID No.	Description	Soil Gas	Moisture	USCS Log	Comments
			Yel-brn clayey silt				
5	22, 31, 39		Rd-brn clayey silt				
10	50/2"		PWR- Sampled as tan-rd. brn. sl. clayey fine sandy Silt w/ Rx frag.				
15							
			Auger Refusal @ 19' bgs				
20			Switched to Air Rotary				
25			Rd-brn Fanglomerate				
30							
55			Terminated Air Drilling @ 55' bgs				

ENVIRO-PRO, P.C.
Charlotte, North Carolina

LITHOLOGIC LOG

Boring No.: SB-4 Job No: EP-1306
Client: Hwy 55 C&D Landfill, LLC

State: NC Total Depth: 17'
n: Wake Co. Date Started: 11-6-01 Date Complete: 11-6-01
Soil Sample Method: Split-spoon Equipment Type: Cantenna dT-250 Boring Diameter: 8"
Drill Method: HSA
mmons
e Method: Groundwater (bmp): 0 hrs 24 hrs
levation (LS): 347.77 Measuring Point Elev. (MP): LS Remarks:

Depth ft	SPT/Interval	Sample ID No.	Description	Soil Gas	Moisture	USCS Log	Comments
			Yel-brn. clayey Silt				
5	32,38,50/4"		Rd-brn clayey Silt			CL	
	50/1"					CL	
10			PWR - Sampled as tan - rd brn. sl. clayey fine sandy Silt w/ Rx frag.				
15			Auger Refusal @ 17' bgs				
20							

ENVIRO-PRO, P.C. Charlotte, North Carolina	LITHOLOGIC LOG	Boring No.: SB-5 Job No: EP-1306 Client: Hwy 55 C&D Landfill, LLC

Location: Wake Co. State: NC Total Depth: 20'
TB Soil Sample Method: split-spoon Date Started: 12-10-01 Date Complete: 12-10-01
R. Simmons Drill Method: HSA Equipment Type: Cafform - CT-250 Boring Diameter: 8"
Gas Sample Method: Groundwater (bmp): 0 hrs 24 hrs
Surface Elevation (LS): 362.50 Measuring Point Elev. (MP): LS Remarks:

Elevation	Depth ft	SPT/Interval	Sample ID No.	Description	Soil Gas	Moisture	USCS Log	Comments
				Yel-bru clayey Silt				
	5	28, 35, 45		Rd-brn clayey silt				
	10	50/2"						
				PWR - Sampled as tan-brn. sl. clayey sandy Silt				
	15	50/1"						
	20			Auger Refusal @ 20' bgs				

ENVIRO-PRO, P.C. Charlotte, North Carolina	LITHOLOGIC LOG	Boring No.: SB-6 Job No: EP-1306 Client: Hwy 55 C&D Landfill, LLC

ocation: Wake Co. State: NC Total Depth: 18'
TB Soil Sample Method: Split-Spoon Date Started: 12-10-01 Date Complete: 12-10-01
R. Simmons Drill Method: HSA Equipment Type: Centerm CT-25c Boring Diameter: 8"
Sample Method: Groundwater (bmp): 0 hrs 24 hrs
rface Elevation (LS): 348.00 Measuring Point Elev. (MP): LS Remarks:

on	Depth ft.	SPT/Interval	Sample ID No.	Description	Soil Gas	Moisture	USCS Log	Comments
				Yel-brn. clayey silt				
		32, 44, 50/5"						
	5							
		50/2"						
	10			PIVR- Sampled as Tan-brn - rd.-brn. sl. clayey sandy silt w/ Rx frag.				
		50/1"						
	15							
				Auger Refusal @ 18' bgs				
	20							

Wake County, NC 1006
Laura M Riddick, Register Of Deeds
Presented & Recorded 10/01/2001 16:09:02
State Of NC Real Estate Excise Tax : $2480
Book : 009089 Page : 01039 - 01044

Prepared by ~~& return to:~~ Mail To: Grantee

Poyner & Spruill L.L.P. (RWW)
(without title examination)
Post Office Box 10096
Raleigh, NC 27605

Excise $2,480.00 Out of 0072826

NORTH CAROLINA GENERAL WARRANTY DEED

THIS DEED is made this 24th day of September, 2001, from FON ASSOCIATES LIMITED PARTNERSHIP, a North Carolina limited partnership (the "Grantor"), to HIGHWAY 55 C&D LANDFILL, LLC, a North Carolina limited liability company (the "Grantee"), with a mailing address of 19109-110 W Catawba Ave. Cornelius, NC 28031.

WITNESSETH:

For and in consideration of $1.00 cash in hand paid and other good and valuable consideration, the receipt and sufficiency of which is hereby acknowledged, Grantor has and by these presents does grant, bargain, sell and convey unto Grantee in fee simple, all that certain lot or parcel of land situated in Wake County, North Carolina, more particularly described on Exhibit A attached hereto and by this reference made a part hereof:

TO HAVE AND TO HOLD the aforesaid lot or parcel of land and all privileges and appurtenances thereto belonging to the Grantee in fee simple.

Grantor covenants with Grantee that Grantor is seized of said land in fee simple, that Grantor has the right to convey the same in fee simple, that title is marketable and free and clear of all encumbrances, and that Grantor will warrant and defend the title against the lawful claims of all persons whomsoever, except for those exceptions described on Exhibit B attached hereto and by this reference made a part hereof.

The designation "Grantor", and "Grantee" as used herein shall include said named parties and their respective heirs, successors and assigns, and shall include the singular, plural, masculine, feminine or neuter as required by context.

IN WITNESS WHEREOF, the undersigned has executed this instrument under seal as of the day and year first above written.

FON ASSOCIATES ~~LIMITED~~ PARTNERSHIP
a North Carolina limited partnership (SEAL)

By: _____ (SEAL)
~~Shie Shin~~ Wu, General Partner

STATE OF NORTH CAROLINA
COUNTY OF WAKE

I, a Notary Public of the County and State aforesaid, certify that Shie Shin Wu, personally appeared before me, who, being by me duly sworn, says that he is General Partner of FON ASSOCIATES LIMITED PARTNERSHIP., a North Carolina limited partnership, and that the said writing was signed by them in behalf of said limited partnership as their act and deed and as the act and deed of said limited partnership.

WITNESS my hand and notarial seal, this 1st day of October, 2001.

Sara J Perrin Notary Public

My Commission Expires: 01/11/2006

RALEIGH/002006-005/311961 v.1 09/24/01

EXHIBIT "A"

BEGINNING at a point located in Falls Branch, said point being located North 70 degrees 30 minutes 09 seconds West 2709.93 feet from a mag nail located in the centerline of S. R. 1172 (a/k/a Old Smithfield Rd.) and the centerline of Highway 55, said point also being the POINT AND PLACE OF BEGINNING, thence along the run of Falls Branch Creek the following calls and distances: South 70 degrees 17 minutes 40 seconds West 82.58 feet to a point, thence North 42 degrees 11 minutes 55 seconds West 197.13 feet to a point, thence South 70 degrees 16 minutes 53 seconds West 125.20 feet to a point, thence South 01 degrees 50 minutes 53 seconds West 120.77 feet to a point, thence South 70 degrees 44 minutes 34 seconds West 156.46 feet to a point, thence North 75 degrees 48 minutes 30 seconds West 99.08 feet to a point, thence South 66 degrees 50 minutes 57 seconds West 127.19 feet to a point , thence South 46 degrees 59 minutes 42 seconds West 104.40 feet to a point , thence South 29 degrees 30 minutes 11 seconds West 155.68 feet to a point, thence South 53 degrees 28 minutes 52 seconds West 162.59 feet to a point, thence South 88 degrees 57 minutes 47 seconds West 156.63 feet to a point, thence South 09 degrees 55 minutes 53 seconds West 72.11 feet to a point, thence South 82 degrees 32 minutes 55 seconds West 246.55 feet, thence South 25 degrees 00 minutes 16 seconds West 112.16 feet to a point, thence North 58 degrees 34 minutes 44 seconds West 89.83 feet to a point, thence South 77 degrees 55 minutes 10 seconds West 104.07 feet to a point, thence North 55 degrees 08 minutes 41 seconds West 128.16 feet to a point, thence North 46 degrees 20 minutes 01 seconds West 160.15 feet to a point, thence South 66 degrees 30 minutes 35 seconds West 95.59 feet to a point, thence North 45 degrees 46 minutes 13 seconds West 87.66 feet to a point, thence South 73 degrees 24 minutes 16 seconds West 114.69 feet to a point, thence South 11 degrees 10 minutes 12 seconds East 87.05 feet to a point, thence North 62 degrees 13 minutes 03 seconds West 106.40 feet to a point, thence South 83 degrees 26 minutes 30 seconds West 152.16 feet to a point, thence South 32 degrees 29 minutes 39 seconds West 85.70 feet to a point, thence North 56 degrees 55 minutes 23 seconds West 163.19 feet to a point, thence South 65 degrees 16 minutes 36 seconds West 230.69 feet to a point, thence North 61 degrees 40 minutes 39 seconds West 269.37 feet to a point, thence North 41 degrees 39 minutes 35 seconds West 233.34 feet to a point, thence South 73 degrees 22 minutes 35 seconds West 210.49 feet to a point, thence South 60 degrees 14 minutes 01 seconds West 206.57 feet to a point, said point being the final point located in the run of Falls Branch Creek, thence North 19 degrees 08 minutes 52 seconds West 169.59 feet to an iron pipe, thence North 54 degrees 25 minutes 57 seconds West 325.79 feet to an iron pipe, thence North 69 degrees 25 minutes 11 seconds West 183.82 feet to an iron pipe, thence North 73 degrees 57 minutes 20 seconds West 219.38 feet to an iron pipe, thence North 77 degrees 55 minutes 48 seconds West 217.53 feet to an iron pipe, thence North 05 degrees 34 minutes 39 seconds West 998.63 feet to a point, thence South 80 degrees 04 minutes 02 seconds East 106.02 feet to a point, thence South 82 degrees 38 minutes 07 seconds East 1467.38 feet to a point, thence South 88 degrees 20 minutes 16 seconds East 672.04 feet to a point, thence South 80 degrees 54 minutes 58 seconds East 580.68 feet to a point, thence North 88 degrees 37 minutes 31 seconds East 704.64 feet to a point, thence South 80 degrees 29 minutes 29 seconds East 647.01 feet to a point, thence South 53

degrees 46 minutes 40 seconds East 472.48 feet to a point, thence South 03 degrees 27 minutes 32 seconds West 400.96 feet to the POINT AND PLACE OF BEGINNING, containing 116.333 acres and being designated as Tract "C" on an unrecorded survey entitled "Property Survey for Highway 55 C & D Landfill, LLC", dated 9/22/01 and prepared by Patterson, Brewer & Associates.

This tract is a portion of the same tract of land referred to as Tract 3 in Deed Book 3850, Page 359, Wake County Registry.

EXHIBIT B

1. Lien of ad valorem taxes for the year 2002 and subsequent years.
2. Right of way of Technology Drive.
3. Right of way of Dixie Pipeline recorded in Book 1484, Page 239, Wake County Registry.
4. Right of way to Data General Corporat9ion recorded in Book 2829, Page 177 and Book 2791, Page 428, Wake County Registry.
5. Wastewater Utility Easement to County of Wake recorded in Book 3059, Page 118, Wake County Registry.
6. Easement Agreement and Quit-Claim to Fred G. Cash, Jr. and Annie Ruth Cash Maynard for perpetual ingress and egress across subject property recorded in Book 4454, Page 661, Wake County Registry.
7. Utility easement to Carolina Power & Light Company recorded in Book 8419, Page 2323, Wake County Registry.
8. Memorandum of Action for eminent domain taking of perpetual sewer easement recorded in Book 8943, page 596 Wake County Registry.
9. Future right of way to Department of Transportation for construction of I-540 Western Wake Expressway.

Laura M Riddick
Register of Deeds
Wake County, NC

Book : 009099 Page : 01039 - 01044

Yellow probate sheet is a vital part of your recorded document.
Please retain with original document and submit for rerecording.

WAKE COUNTY NORTH CAROLINA

Wake County Register of Deeds
Laura M. Riddick
Register of Deeds

North Carolina - Wake County

The foregoing certificate___ of

Sara J. Perry

_____ Notary(ies) Public is (are) certified to be correct. This instrument and this certificate are duly registered at the date and time and in the book and

Laura M Riddick
Register of Deeds
Wake County, NC

Book : 003093 Page : 01039 - 01044

Yellow probate sheet is a vital part of your recorded document.
Please retain with original document and submit for rerecording.

WAKE COUNTY NORTH CAROLINA

Wake County Register of Deeds
Laura M. Riddick
Register of Deeds

North Carolina - Wake County

The foregoing certificate___ of

Laura J. Perry

_____ Notary(ies) Public is (are) certified to be correct. This instrument and this certificate are duly registered at the date and time and in the book and

Yellow probate sheet is a vital part of your recorded document.
Please retain with original document and submit for rerecording.

WAKE COUNTY NORTH CAROLINA

Wake County Register of Deeds
Laura M. Riddick
Register of Deeds

North Carolina - Wake County

The foregoing certificate___ of Laura J. Perry

_____ Notary(ics) Public is (are) certified to be correct. This instrument and this certificate are duly registered at the date and time and in the book and page shown on the first page hereof.

Laura M. Riddick, Register of Deeds

By: Barbara Elliott
Assistant/~~Deputy~~ Register of Deeds

This Customer Group
_____ # of Time Stamps Needed

This Document
_____ New Time Stamp
6 # of Pages

Yellow probate sheet is a vital part of your recorded document.
Please retain with original document and submit for rerecording.

WAKE COUNTY NORTH CAROLINA

Wake County Register of Deeds
Laura M. Riddick
Register of Deeds

North Carolina - Wake County

The foregoing certificate___ of Laura J. Perry

_____ Notary(ies) Public is (are) certified to be correct. This instrument and this certificate are duly registered at the date and time and in the book and page shown on the first page hereof.

Laura M. Riddick, Register of Deeds

By: Barbara Elliott
Assistant/~~Deputy~~ Register of Deeds

This Customer Group
_____ # of Time Stamps Needed

This Document
_____ New Time Stamp
6 # of Pages

APPENDIX 2

Aerial Photograph

¼ Mile Radius Map

Zoning Approval Letters

Fire Department Letter

WAKE COUNTY
SPECIAL USE PERMIT
&
FRANCHISE AGREEMENT

WAKE COUNTY
NORTH CAROLINA

Board of Commissioners

P.O. Box 550 • Raleigh, NC 27602

TEL 919 856 6160
FAX 919 856 5699

LINDA D. COLEMAN, CHAIRMAN
HERBERT H. COUNCIL, VICE-CHAIRMAN
KENNETH M. GARDNER
VERNON MALONE
BETTY O. MANGUM
BETTY LOU WARD
MICHAEL A. WEEKS

WAKE COUNTY)

NORTH CAROLINA)

I, Gwendolyn I. Reynolds, Clerk to the Board of County Commissioners, County of Wake, State of North Carolina, hereby certify that the attached is a true and complete copy of **Excerpts from minutes of Board of Commissioners' meeting – Granting franchise to Griffin Brothers Companies, D/B/A Highway 55 C&D Landfill, LLC, for operation of a construction and demolition debris landfill in Wake County, North Carolina (2nd vote)**, dated December 3, 2001.

Witness my hand as Clerk to the Board, and the Seal of the County of Wake, this the 19th day of December, 2001.

Gwendolyn I. Reynolds
Clerk to the Board of Commissioners
Wake County, North Carolina

GRANT OF LANDFILL FRANCHISE
GRIFFIN BROTHERS COMPANIES DOING BUSINESS
AS HIGHWAY 55 C&D LANDFILL, LLC

Griffin Brothers Companies, doing business as Highway 55 C&D Landfill, LLC, has filed an application for a franchise to operate a construction and demolition debris landfill in Wake County. The site contains approximately 85 acres and is located west of the NC-55 By-pass, north of SR-1172 (Old Smithfield Road) south of the proposed right of way of the Western Wake Expressway and just east of the existing Wake County Landfill. The application is being filed pursuant to the franchise ordinance for C&D landfills enacted by the Board of Commissioners September 7, 1999.

On November 19, 2001, the Board of Commissioners voted to approve the franchise request. State law requires that a franchise be approved at two regular meetings before it may be finally adopted.

Upon motion of Commissioner Gardner, seconded by Commissioner Council, the Board unanimously approved granting a landfill franchise to Griffin Brothers Companies, doing business as Highway 55 C&D Landfill, LLC to operate a C&D landfill in Wake County.

ORDINANCE GRANTING FRANCHISE TO
GRIFFIN BROTHERS COMPANIES, D/B/A HIGHWAY 55 C&D LANDFILL, LLC
FOR OPERATION OF CONSTRUCTION AND DEMOLITION DEBRIS LANDFILL

WHEREAS, Griffin Brothers Companies, doing business as Highway 55 C&D Landfill, LLC, has applied for a franchise for the operation of a construction and demolition debris landfill in Wake County; and,

WHEREAS, the application filed by Griffin Brothers Companies, doing business as Highway 55 C&D Landfill, LLC, contains all of the information required by the Wake County franchise ordinance for construction debris (C&D) landfills; and,

WHEREAS, the applicant has received a special use permit from the Wake County Planning Board for operation of a C&D landfill on the site identified in the application.

NOW THEREFORE BE IT ORDAINED THAT, Griffin Brothers Companies, doing business as Highway 55 C&D Landfill, LLC, is hereby granted a franchise to operate a construction and demolition debris landfill in Wake County in accordance with the representations made on the application submitted by Griffin Brothers Companies, doing business as Highway 55 C&D Landfill, LLC a copy of which is maintained in the permanent files of the Clerk to the Board. This franchise shall be in effect for a period of 20 years.

****

WAKE COUNTY
NORTH CAROLINA

Board of Commissioners

P.O. Box 550 • Raleigh, NC 27602

TEL 919 856 6160
FAX 919 856 5699

LINDA D. COLEMAN, CHAIRMAN
HERBERT H. COUNCIL, VICE-CHAIRMAN
KENNETH M. GARDNER
VERNON MALONE
BETTY O. MANGUM
BETTY LOU WARD
MICHAEL A. WEEKS

WAKE COUNTY)

NORTH CAROLINA)

I, Gwendolyn I. Reynolds, Clerk to the Board of County Commissioners, County of Wake, State of North Carolina, hereby certify that the attached is a true and complete copy of **Excerpts from minutes of Board of Commissioners' meeting – Granting franchise to Griffin Brothers Companies, D/B/A Highway 55 C&D Landfill, LLC, for operation of a construction and demolition debris landfill in Wake County, North Carolina (1st vote)**, dated November 19, 2001.

Witness my hand as Clerk to the Board, and the Seal of the County of Wake, this the 19th day of December, 2001.

Gwendolyn I. Reynolds
Clerk to the Board of Commissioners
Wake County, North Carolina

GRANT OF LANDFILL FRANCHISE
HIGHWAY 55 C&D LANDFILL, LLC

Chairman Weeks recognized the County Attorney to give an overview of Griffin Brothers Companies request for landfill franchise. He stated that Griffin Brothers Companies, doing business as Highway 55 C&D Landfill, LLC, has filed an application for a franchise to operate a construction and demolition debris landfill in Wake County. The site contains approximately 85 acres and is located west of the NC 55-Bypass, north of SR-1172 (Old Smithfield Road) south of the proposed right of way of the Western Wake Expressway (I-540), and just east of the existing Wake County Landfill. The application has been filed pursuant to the franchise ordinance for C&D landfills enacted by the Board of Commissioners September 7, 1999.

The County Attorney stated that the Board of Commissioners may but is not required to hold a public hearing prior to acting on a request for a C&D franchise. He also stated that State law requires that a franchise be approved at two regular meetings before it may be adopted.

Mr. Tom Worth, Post Office Box 1799, Raleigh, NC, representing the applicant, Griffin Brothers, stated that the required items have been submitted by the applicant. He introduced the following persons: Larry Griffin, principal of Griffin Brother Companies; Ron Gilkerton, geologist with Griffin Brothers; Steve Williams, land appraiser; and Jonathan Reed, Traffic/Transportation Engineer. He then outlined the items that have been submitted pursuant to the franchise ordinance for C&D landfills:

1. The name and address of the applicant and owner of the proposed site.
2. The trade and other fictitious names, if any, under which the applicant does business, along with a certified copy of an assumed name certificate stating such name or articles of incorporation stating such name.
3. A legal description and map of the property proposed to be included in the C&D landfill.
4. A statement of the population to be served by the C&D landfill, including a description of the geographic area.
5. A description of the volume and characteristics of the waste stream.
6. A projection of the useful life of the C&D landfill; and
7. Evidence that the Wake County Board of Adjustment has granted a special use permit for the proposed C&D landfill.

Mr. Worth further stated that the C&D also has a recycling component to it; that the applicant has held discussions with the Town of Apex both before and after consideration by the Wake County Board of Adjustment, as well as with the Town of Holly Springs. He also noted that there was public input at the public hearing conducted by the Board of Adjustment August 14, 2001, and the applicant has addressed those issues brought forward at that time.

Chairman Weeks noted that the site is industrially zoned, the applicant has planned for additional buffers, there is no residential impact, the operation will have a recycling function; that access to the site will be limited to the new bypass—a four-lane road, thus the landfill will not be in operation until a portion of the 55 Bypass is open.

Following much discussion, **Commissioner Gardner moved approved of granting a franchise to Griffin Brothers Companies, D/B/A Highway 55 C&D Landfill, LLC for operation of a construction and demolition debris landfill. The motion was seconded by Commissioner Council and was unanimously approved.**

ORDINANCE
GRANTING FRANCHISE TO GRIFFIN BROTHERS COMPANIES D/B/A
HIGHWAY 55 C&D LANDFILL, LLC FOR OPERATION OF
CONSTRUCTION AND DEMOLITION DEBRIS LANDFILL

WHEREAS, Griffin Brothers Companies, doing business as Highway 55 C&D Landfill, LLC, has applied for a franchise for the operation of a construction and demolition debris landfill in Wake County; and

WHEREAS, the application filed by Griffin Brothers Companies, doing business as Highway 55 C&D Landfill, LLC, contains all of the information required by the Wake County franchise ordinance for construction debris (C&D) landfills; and

WHEREAS, the applicant has received a special use permit from the Wake County Board of Adjustment for operation of a C&D landfill on the site identified in the application.

NOW, THEREFORE, BE IT ORDAINED THAT, Griffin Brothers Companies, doing business as Highway 55 C&D Landfill, LLC, is hereby granted a franchise to operate a construction and demolition debris landfill in Wake County in accordance with the representations made on the application submitted by Griffin Brothers Companies, doing business as Highway 55 C&D Landfill, LLC, a copy of which is maintained in the permanent files of the Clerk to the Board. This franchise shall be in effect for a period of 20 years.

Return To: Tom Worth Jr
P.O. Box 1799
Raleigh, N.C. 27602

STATE OF NORTH CAROLINA

NOTICE OF SPECIAL USE APPROVAL

COUNTY OF WAKE

PETITION NO BA: SU-1923-01

Property recorded in Deed Book 9099, Page 1039 -1044, Wake County Register of Deeds.

NAME OF PROPERTY OWNER (s): Griffin Brothers Companies dba Highway 55 C&D Landfill L.L.C. and Ray Markham Stewart, Ruth B. Stewart, Anthony K. Woodell and Melissa S. Woodell

KNOW ALL PERSONS BY THESE PRESENTS, that Griffin Brothers, 19109-118 West Catawba Avenue, Cornelius, North Carolina 28031-5613, applied to Wake County for Special Use Approval for the use and development of the property described above which permit was granted by Wake County on August 14, 2001.

To construct and operate a Construction and Demolition Debris (C&D) landfill and a recycling facility.

GRIFFIN BROTHERS COMPANIES
By: [signature]
PETITIONER

HIGHWAY 55 C&D LANDFILL, LLC
By: [signature] MANAGER
OWNER (if other than petitioner)

[signature]
Ruth B. Stewart
[signature]
Melissa S. Wood

I, MIRIAM J. MOORE, a Notary Public in and for said County and State do hereby certify that L GRIFFIN, RAY MARKHAM STEWART, ANTHONY K. WOODELL, RUTH B. STEWART, MELISSA S. WOODELL personally appeared before me and acknowledge the execution of this document.
Witness my hand and official stamp or seal, this 14th day of November, 2001.

MIRIAM J. MOORE NOTARY PUBLIC WAKE COUNTY, N.C.
(Seal)

[signature]
Notary Public
My Commission Expires: 5-07-06

WAKE COUNTY

BY

[signature]
Becky Smith, Clerk to the Wake County Board of Adjustment

[signature]
Melinda Clark, Wake County Land Development Administrator

I, Brenda F. Coats, a Notary Public in and for said County and State do hereby certify that Melinda Clark, Land Development Administrator of Wake County, and Becky Smith, Clerk to the Wake County Board of Adjustment personally appeared before me and duly sworn says each for himself/herself that he/she knows that this document is a true and accurate account of the Order of The Board of Adjustment to the Land Development Administrator to issue said special use approval subject the any terms or conditions specified in the order.

IN WITNESS WHEREOF, I have hereunto set my hand and Notarial Seal this the 6th, day of September, 2001.

[signature]
Notary Public
My Commission Expires: 9-1-2003

BRENDA F. COATS NOTARY PUBLIC WAKE COUNTY, N.C.

Wake County,NC 124
Laura M Riddick, Register Of Deeds
Presented & Recorded 12/20/2001 09:53:08
Book : 009218 Page : 00197 - 00198

Laura M Riddick
Register of Deeds
Wake County, NC

Book : 009218 Page : 00197 - 00198

Yellow probate sheet is a vital part of your recorded document.
Please retain with original document and submit for rerecording.

WAKE COUNTY NORTH CAROLINA

Wake County Register of Deeds
Laura M. Riddick
Register of Deeds

North Carolina - Wake County

The foregoing certificate S of Miriam J. Moore
Brenda F. Coats

_____ Notary(ies) Public is (are) certified to be correct. This instrument and this certificate are duly registered at the date and time and in the book and page shown on the first page hereof.

Laura M. Riddick, Register of Deeds
By: Hedrick C. Bayron
Assistant/Deputy Register of Deeds

This Customer Group
_____ # of Time Stamps Needed

This Document
_____ New Time Stamp
2 # of Pages

WAKE COUNTY NORTH CAROLINA

Board of Commissioners

P.O. Box 550 • Raleigh, NC 27602

TEL 919 856 6160
FAX 919 856 5699

LINDA D. COLEMAN, CHAIRMAN
HERBERT H. COUNCIL, VICE-CHAIRMAN
KENNETH M. GARDNER
VERNON MALONE
BETTY O. MANGUM
BETTY LOU WARD
MICHAEL A. WEEKS

I, Gwendolyn I. Reynolds, Clerk to the Wake County Board of Commissioners, do hereby certify that the attached pages are true and accurate copy of the following:

1. Pages 1-6 from the agenda package of the November 19, 2001, meeting provided to the Wake County Board of Commissioners relating to the *Application for Construction and Demolition Debris (C&D) Landfill Franchise for Griffin Brothers Companies doing business as Highway 55 C&D Landfill, LLC,* said landfill to be located west of the NC-55 Bypass, north of SR-1172 (Old Smithfield Road), south of the proposed right-of-way of the Western Wake Expressway (I-540), and just east of the existing Wake County Landfill.

Gwendolyn I. Reynolds
Clerk to the Board of Commissioners

February 11, 2002
Date

APPROVED

11/19/2001

ITEM # 10

Item Title:
Request for Grant of Landfill Franchise

Item Summary:
Griffin Brothers Companies, doing business as Highway 55 C&D Landfill, LLC, has filed an application for a franchise to operate a construction and demolition debris (C&D) landfill in Wake County. The site contains approximately 85 acres and is located west of the NC-55 By-pass, north of SR-1172 (Old Smithfield Road) south of the proposed right of way of the Western Wake Expressway (I-540), and just east of the existing Wake County Landfill (map attached). The application is filed pursuant to the franchise ordinance for C&D landfills enacted by the Board on September 7, 1999. The ordinance provides that the Board shall issue a franchise upon the presentation of the following information to the County:

1. The name and address of the applicant and owner of the proposed site.

2. The trade or other fictitious names, if any, under which the applicant does business, along with a certified copy of an assumed name certificate stating such name or articles of incorporation stating such name.

3. A legal description and a map of the property proposed to be included in the C&D landfill.

4. A statement of the population to be served by the C&D landfill, including a description of the geographic area.

5. A description of the volume and characteristics of the waste stream.

6. A projection of the useful life of the C&D landfill; and

7. Evidence that the Wake County Board of Adjustment has granted a special use permit for the proposed C&D landfill.

The Board may, but is not required to, hold a public hearing prior to acting on a request for a C&D franchise. A proposed ordinance granting a franchise is attached for consideration. State law requires that a franchise be approved at two regular meetings before it may be adopted. A copy of the application (w/o attachments) is attached.

Attachments:3

Specific Action Requested:
Consideration of application of Griffin Brothers Companies, doing business as Highway 55 C&D Landfill, LLC for grant of franchise to operate a C&D landfill.

APPROVED

APPLICATION FOR CONSTRUCTION AND DEMOLITION DEBRIS (C&D) LANDFILL FRANCHISE

NOW COMES Applicant Griffin Brothers Companies d/b/a Highway 55 C&D Landfill, LLC, Property Owner and Landfill Operator and submits this application for a C&D Landfill Franchise to the Wake County Board of Commissioners on this lst day of November, 2001.

In support of this Application there is hereby presented the following information:

1. The name of the Applicant is Griffin Brothers Companies d/b/a Highway 55 C&D Landfill, LLC of 19109-118 W. Catawba Ave, Cornelius, NC 28031 property owner and proposed landfill operator.

2. Applicant Highway 55 C&D Landfill, LLC's Articles of Organization are attached hereto as Exhibit A. (Note: Griffin Brothers Companies is doing business as [(d/b/a)] Highway 55 C&D Landfill, LLC.

3. A legal description of the tract which includes the proposed C&D landfill is set forth in the Deed recorded in Book 9099, page 1039-1044, Wake Registry attached as Exhibit B and the proposed Access Road, which is under contract for purchase by Applicant, is shown upon Exhibit B1. The landfill area is shown on the preliminary Special Use Permit Site Plan attached as Exhibit C and is proposed to be located within the portion of the tract which contains approximately 85 acres and lies south of the proposed right of way of the Western Wake Expressway (I-540) and east of Little Branch.

4. The area to be served by the site is Wake County and its municipalities, including without limitation the municipalities of Apex, Cary, Fuquay-Varina, Holly Springs, and Raleigh. The population of Wake County and the municipalities specified in this paragraph is estimated to be approximately 1.2 million people.

The Wake County Board of Adjustment unanimously approved this landfill site to accept C&D waste on August 14, 2001. The landfill site is located west of the new NC Highway 55 Bypass, east of Little Branch, north of Old Smithfield Road, and south of the future Western Wake Expressway (I-540). The site is well buffered with trees on all sides. Access to the site will be from a special lane adjacent to Old Smithfield Road from NC Highway 55 Bypass for approximately 300 feet to our entrance as shown upon Exhibit B1. Traffic from our site will exit onto Old Smithfield Road. The South Wake County (Feltonville) Landfill is the only entity that shares Old Smithfield Road to the NC Highway 55 Bypass. All truck traffic will be required to exit onto NC Highway 55 Bypass from this portion of Old Smithfield Road.

Attached as Exhibit D is the Traffic Study report performed by Parsons Brinckerhoff, Quade & Douglas, Inc. dated August 10, 2001 which updated the attached Traffic Impact Assessment dated May 29, 2001. Attached as Exhibit E is the letter dated August 13, 2001

from Williams Appraisers, Inc. stating the site is well suited for this landfill. Both exhibits were entered into evidence at the Wake County Board of Adjustment on August 14, 2001.

5. It is projected over the life of the proposed C&D landfill to receive approximately 3 to 4 million tons of C&D waste. The annual tons are projected to be approximately 300,000 tons. The proposed landfill site will operate six days per week. The waste stream will be strictly limited by its State Permit to be issued by the North Carolina Department of Environmental and Natural Resources (NC DEHNR), Division of Waste Management, prior to construction. The waste stream will include the following types of waste materials: inert debris similar to types deposited in LCID landfills, asphalt, solid waste resulting from construction, remodeling, repair of demolition operations on pavement, buildings or other structures (such as furniture, carpet remnants and any other waste materials resulting from the demolition of a structure) and other materials approved by NC DEHNR.

6. The projected useful life of this C&D landfill is anticipated to be approximately 20 years.

7. Applicant attaches as Exhibit F a copy of the Notice of Special Use Approval, which confirms that the Wake County Board of Adjustment approved the issuance of a Special Use Permit Request No. BA SU-1923-01 for this proposed landfill on August 14, 2001.

WHEREFORE, Applicant, Griffin Brothers Companies d/b/a Highway 55 C&D Landfill, LLC, through their undersigned attorney, respectfully request that the Wake County Board of Commissioners, after such notices, consideration and deliberation as said Board deems appropriate and in accordance with all applicable statutes, ordinances and regulations, issue the Franchise as requested by the Applicant.

GRIFFIN BROTHERS COMPANIES, d/b/a
HIGHWAY 55 C&D LANDFILL, LLC

By: Thomas C. Worth, Jr.

Thomas C. Worth, Jr.
Attorney for Applicant
16 West Martin Street, Suite 700
Raleigh, North Carolina 27601
Telephone (919) 831-1125
Facsimile (919) 831-1205

APPROVED

ORDINANCE GRANTING FRANCHISE TO
GRIFFIN BROTHERS COMPANIES, D/B/A HIGHWAY 55 C&D LANDFILL, LLC
FOR OPERATION OF CONSTRUCTION AND DEMOLITION DEBRIS LANDFILL

WHEREAS, Griffin Brothers Companies, doing business as Highway 55 C&D Landfill, LLC, has applied for a franchise for the operation of a construction and demolition debris landfill in Wake County; and

WHEREAS, the application filed by Griffin Brothers Companies, doing business as Highway 55 C&D Landfill, LLC, contains all of the information required by the Wake County franchise ordinance for construction debris (C&D) landfills; and

WHEREAS, the applicant has received a special use permit from the Wake County Board of Adjustment for operation of a C&D landfill on the site identified in the application.

NOW, THEREFORE, BE IT ORDAINED THAT, Griffin Brothers Companies, doing business as Highway 55 C&D Landfill, LLC, is hereby granted a franchise to operate a construction and demolition debris landfill in Wake County in accordance with the representations made on the application submitted by Griffin Brothers Companies, doing business as Highway 55 C&D Landfill, LLC, a copy of which is maintained in the permanent files of the Clerk to the Board. This franchise shall be in effect for a period of 20 years.

Adopted November 19, 2001.

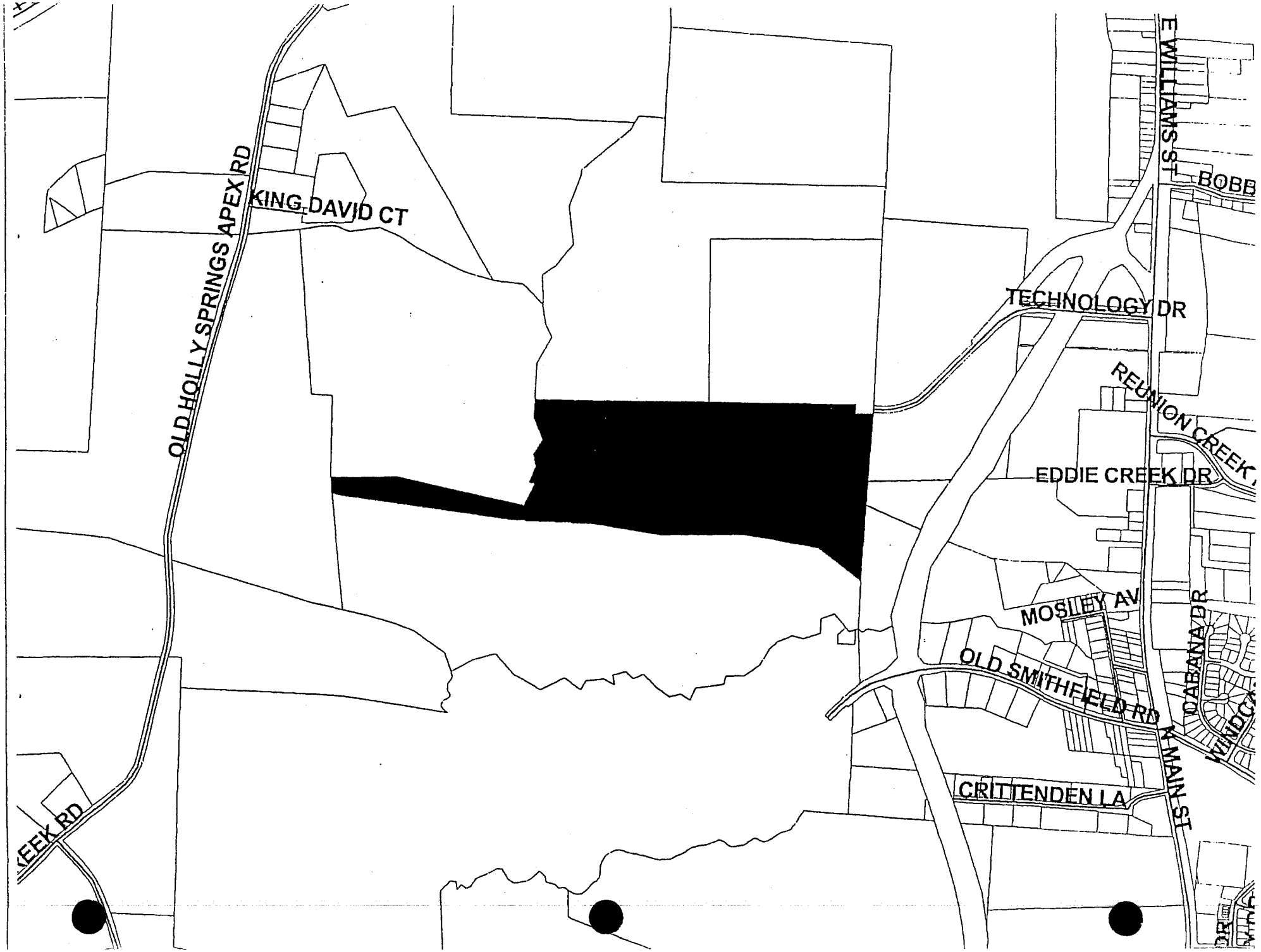
OLD HOLLY SPRINGS APEX RD
KING DAVID CT
E WILLIAMS ST
BOBB
TECHNOLOGY DR
REUNION CREEK
EDDIE CREEK DR
MOSLEY AV
OLD SMITHFIELD RD
N MAIN ST
CRITTENDEN LA
OAKANA DR
KEEK RD

Apex
THE PEAK OF GOOD LIVING

Town of Apex
P. O. BOX 250
APEX, NORTH CAROLINA 27502

April 30, 2002

Ronald C. Gilkerson
Hwy 55 Landfill and Recycling Center
19109 West Catawba Ave.; Suite 118
Cornelius, NC 28031-5613

Dear Mr. Gilkerson:

I am writing this letter to confirm that the Apex Fire Department is aware of your project and will respond to any fire safety needs. The Fire Department has received a site plan and has knowledge of all products and their locations that will be on site. Based on the information provided, we understand the following about the project:

- The project is located on Old Smithfield Road off Highway 55 Bypass, Wake County, NC.
- The facility will be reprocessing land-clearing debris, grass clippings, loose leaves, soil components, aggregate material, and tree limbs.
- These materials will be reprocessed in windrows that will be 8-12 feet high. Windrows that are 12 feet high will require a width of 20 feet, and each winrow will be place no closer than 25 feet apart which will provide adequate fire breaks.

If you required additional information from the Town of Apex, please contact me at 919-362-4001or Dan LaMontagne at 919-362-8166.

Sincerely,

Alan Capps

Alan Capps
Interim Chief

Cc: Dan LaMontagne, PE – Apex Public Works

APEX 1873 NORTH CAROLINA

APPENDIX 3

Processing Equipment Specifications And O & M Manuals

POWERSCREEN®

POWERSCREEN TROMMEL 616

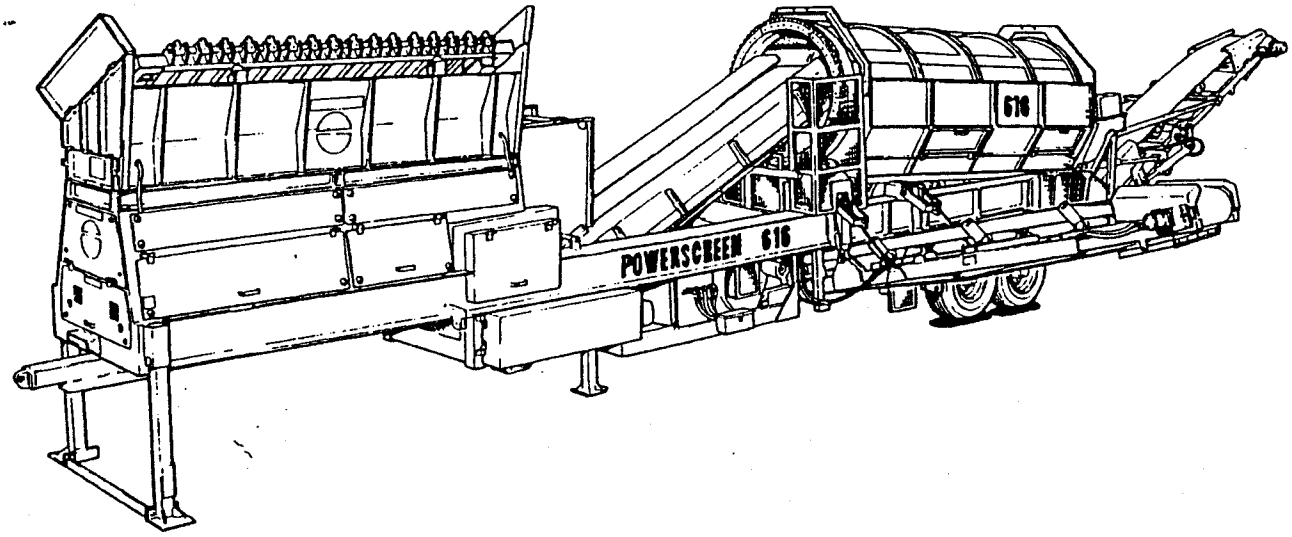

POWERSCREEN TROMMEL 616

Maintenance & Spare parts

Powerscreen Trommel 616

OPERATING INSTRUCTIONS MAINTENANCE & SPARE PARTS

Ref. No. P.91/Issue 1/February 1995

Owners Name

Machine serial no.

Engine/Electric Motor serial no.

Engine agent

Tel. No.

Machine supplied by

Tel. No.

Contents

Introduction, general description, specifications
Operating instructions & Maintenance
Lubrication
Hydraulic Circuit Diagram
Wiring Circuit Diagrams
Safe Operation of Powerscreen Machines
Spare parts ordering procedure
Index to spare parts list
Spare parts list

The right is reserved to alter any details contained in this manual without notice.
Copyright 1995

Powerscreen International Distribution Ltd.

Dungannon, Co. Tyrone, N. Ireland.
Telephone: +44 (0)1868 740701 Telegrams: Powerscreen, Dungannon Telex: 74136 PSCREN G
Fax no: +44 (0)1868 747231

Powerscreen Ltd.
Lower Main St., Kilbeggan, Co. Westmeath, Rep. of Ireland.
Telephone: +353 (0)506 32176/32203 Fax: +353 (0)506 32443

Introduction

The machine which you have now received has been manufactured, assembled and tested with the utmost care and was built with first class materials. Close attention has been paid to all details in assembly, running tests and final inspection. We are confident that you have received a machine which will give you every satisfaction over a long period.

To be assured of faultless operation we would ask you to carefully read the following paragraphs and give the required time and attention to essential maintenance, cleaning and inspection. The machine is simple to operate, adjustments are easy to make and expert assistance is seldom required, provided that ordinary care is exercised in daily use.

If in doubt, please contact our authorised distributors quoting machine serial no. which can be taken from the machine plate or this manual.

GENERAL DESCRIPTION

The machine is designed as a self contained mobile unit for shredding, screening and stockpiling materials into various sizes. The material is deposited in the feed hopper (a reject grid will discharge oversize material). The variable speed feeder delivers the material evenly on to the main belt which conveys it to the screen. The two grades of screened material are stockpiled to one end and one side of the machine.

SPECIFICATIONS

Working Length :	21.92m (71ft. 11ins.)
Towing Length :	16.1m (52ft. 10ins.)
Working Width :	7.01m (23ft)
Towing Width :	2.9m (9ft. 4ins)
Working Height :	4.35m (14ft. 3ins)
Towing Height :	4.00m (13ft. 1ins)
Hopper Capacity (including Grid) :	6.9Cu.m. (9.0Cu. yd's.)
Hopper Opening Size :	1.8m (5ft. 10ins.) x 4.0m (13ft. 1ins.)
Screen Diameter :	1.83m (6ft.)
Screen Length :	4.9m (16ft.)
Engine Size :	67 KW (90 H.P.)
Fuel Consumption (at 2200 r.p.m.)	15.2 ltr/hr (3.5 gal/hr)
Diesel Tank Capacity :	295ltr (65 gal)
Hydraulic system capacity :	500ltr (110 gal)
Total weight :	20440kg (44968lbs)
Total weight on Axle Bogie :	14080kg (30976lbs)
Weight at King Pin :	6360kg (14000 lbs)
Tyre Size :	385/65/R22.5
Tyre Pressure :	9.8 bar (140 psi)
Wheel Stud Torque :	745 Nm (550 lbs ft)

perating instructions & maintenance

VING THE MACHINE ON THE HIGHWAY

ıre Trommel 616 is towed on the highway ensure:
Wing plates are secured to grid by transport brackets
Side conveyor is secured to chassis by the transport brackets(Item 63, Fig. 14).
Side conveyor belt is secured.
Tail conveyor transport stays (Item 68, Fig. 13) are in place.
Tail conveyor belt is secured.
Drum is secured by transport stays (Item 70, Fig. 13).

TALLATION

›re the machine is put into operation it must stand perfectly level on a firm foundation. Level the machine a precision spirit level. Ensure both axles and the towing end of the machine are level. On your general ection of the machine, and before starting the engine the following should be checked:

Engine fuel and lubrication oil levels.
Hydraulic tank oil level (Item 54, Fig. 7)
Control valve levers are in neutral position.
All other personnel are clear of the machine.
All guards are in position.

START THE ENGINE

To start the engine turn the ignition key to position 1, "Ignition" position. Charge lamp, oil pressure lamp and control lamp are illuminated.
If pre-heating is required then turn the ignition key to position 2, "Pre-heat" position. Hold key in this position until pre-heat warning lamp is extinguished after approximately 1.5 to 2 minutes.
y depress and hold override button. Fuel solenoid engages and control lamp is extinguished.
n ignition key to position 3, "start" position. When engine starts, release ignition key to position 1.
When oil light is extinguished release override button.
If engine fails to start consult engine operation manual.

E DIAGRAM BELOW FOR ENGINE CONTROL PANEL IDENTIFICATION

gram is also positioned on the inside of powerunit door).

Ignition key switch
Hour meter
Override button
Tip grid button
Control lamp
Ignition lamp
Pre-heat lamp
Oil pressure lamp
Fan belt failure lamp
Air cleaner blockage lamp
Cylinder head temp. lamp

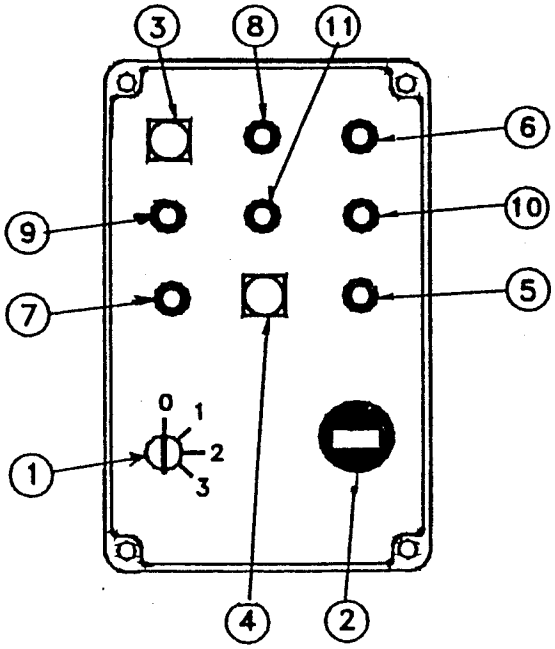

well as 4 fused circuits for existing circuits the panel has 2 additional fuses provided for connecting tional (auxiliary) equipment. The warning lamps on the panel are fitted with 12 volt, 2 watt bulbs. On no ›unt should bulbs of a higher wattage be fitted. Care should be taken if the wiring has to be removed from bulb holders. Do not pull on the wiring or wire terminals as damage may be caused to the bulb holders

RAISING THE FEEDER TO WORKING POSITION

To raise the feeder end of the machine to working position:

1. Remove the safety pin (Item 14, Fig. 8) from the feeder control valve (Item 9, Fig 8)
2. Check that the handle of the 4 port valves (Items 53 & 60, Fig. 8) are in the neutral (central) position.
3. Move the lever of the Trommel drum valve (Item 11, Fig. 8) to the "Up" position.
4. Move the handle of the back 4 port valve (Item 53, Fig 8) down to retract the jacking legs (Item 61, Fig. 4) and lower the feeder end of the machine
5. Lower the rear support legs (Item 75, Fig. 17) at the end of the chassis behind the wheels manually and insert pins(Item 76, Fig. 17) over the top of the legs. There is no hole in these legs. Replace all washers and spring pins(Item 77 & 78, Fig. 17).
6. Move the handle of the back 4 - port valve (Item 53, Fig. 8) up to extend the jacking legs (Item 61, Fig. 4) and raise the feeder end of the machine.
7. Lower hopper support legs (Item 30, Fig. 2) manually from transport position to working position and insert pins and spring pins (Items 31 & 33, Fig. 2).
8. Bolt the hopper support legs cross-tie (Item 34, Fig. 2) into position.
9. Move the handle of the back 4 - port valve (Item 53, Fig. 8) down to retract the jacking legs until the hole in the inner jacking leg is in line with the hole in the outer jacking leg and insert jacking leg pins (Item 62 & 63, Fig. 4). The weight of the feeder end of the machine is now supported by the jacking legs and hopper support legs.
10. Move the handle of the back 4 - port valve (Item 53, Fig. 8) to the neutral (central) position.
11. Move the lever of the feeder control valve (Item 9, Fig. 8) to the neutral position and insert safety pin (Item 14, Fig. 8).
12. Check if the Trommel 616 is level using a spirit level. The best positions to check are under the fifth wheel coupling plate underneath the feeder, and the box iron across the chassis underneath the drum, which the Trommel frame is pivoted on. Check also both chassis sides in two positions equally spaced along the length of the chassis. It is important that the Trommel 616 is level otherwise it will be difficultt to track.the conveyor belts
13. Remove the 2 yellow transport brackets fixing the side extensions (Item 20, Fig. 1) to the grid sides. The side extensions which are hinged, are then lifted up into position and bolted to the tipping frame.
14. The hopper outlet door bar (Item 67, Fig. 3) needs to be moved from the bottom holes in the hopper outlet side shields to the top holes. This will allow the hopper door(Item 60, Fig. 3) to swing. The extension (Item 63, Fig. 3) on the hopper outlet door may need adjusting and the hopper door counterweights(Item 66, Fig. 3) may need to be removed depending on the material being screened.

UNFOLDING SIDE CONVEYOR

To unfold side conveyors from transport position:

1. Remove bolts on both transport brackets (Items 63, Fig. 14) securing the conveyor to the chassis.
2. Remove bar securing side conveyor belt.
3. Engage side conveyor control valve (Item 12, Fig. 8) in the "down" position.
4. Operate the triple bank control valve (Item 63 Fig. 16) first to open out the side conveyor slowly ensuring that the conveyor belt does not get caught. Insert pins and spring pins.
5. Fit pins (Item 65, Fig. 15) to secure side conveyor in working position.
6. Fit head drum guards (Item 44 & 45, Fig. 15), underguard side plates (Item 46 & 47, Fig. 15) and underguard bottoms (Item 49, Fig. 15).
7. Fit guards over troughing rollers (Item 60 & 62, Fig. 15)

ADJUSTING THE SCREEN ANGLE

To raise the screen from transport position to working position:

1. Remove the 4 bolts securing the Trommel frame to the chassis(Item 91, Fig. 11)
2. Check that the handle of the 4 port valves (Item 53 & 60, Fig. 8) are in the neutral (central) position
3. Move the lever of the feeder control valve (Item 9, Fig. 8) up.
4. Move the handle of the 4 port valve (Item 60, Fig. 8) up to increase the screening angle. Set at the 2nd position down from the largest angle position. Replace the 4 bolts in position and tighten. IMPORTANT - ENSURE these bolts are correctly tightened otherwise vibrations may occur in the chassis
5. The yellow transport (Item 70, Fig. 13) bracket on the "A" frame (Item 42, Fig. 13) over the top of the

FOLDING TAIL CONVEYOR

unfold the tail conveyor from the transport position:-

Remove both transport stays (Item 68, Fig. 13) securing conveyor to chassis.
Engage the side and tail conveyor control valve (Item 12, Fig. 8) in the "Up" position.
Operate the triple bank control valve (Item 63, Fig. 16) to unfold the tail conveyor slowly ensuring that the conveyor belt and hydraulic pipes do not get caught in the mechanism. Insert pins and spring pins
The Trommel 616 is supplied with hanger arms (Item 72 & 73, Fig. 16) which are left in the drum for transportation. These are fixed between the Trommel frame and the tail conveyor.
When the conveyor angle is set, insert pins and spring pins (Item 74 & 76 Fig. 16) in the required holes.
Pivot the return roller assembly (Item 63 & 64, Fig. 17) into position below the belt and secure in place with pins and spring pins (Item 68 & 69, Fig. 17).
All guards, hanger arms, steps, bolt mil etc. are removed from inside Trommel 616 drum. Check inside hopper and on incline conveyor belt for any guards or parts.
Fit Trommel rear guide doors (Item 49 & 50, Fig. 13) to Trommel frame at the outlet of the Trommel drum, one on either side. Fit the drum spillage plate (Item 60, Fig. 13) with rubber flap (Item 63, Fig. 13), underneath the drum bolted to both rear guide doors, and fit bracing angle (Item 66, Fig.13)across the top of the doors. Tighten up the bolts after all parts have been loosely bolted together.
Fit the hanger arms (Item 72 & 73, Fig. 16) from the Trommel frame to the tail conveyor using the pins, washer and spring pins (Item 74,75 & 76, Fig.16). The length of the hanger arms is adjustable to allow the angle of the tail conveyor to be adjusted to the required height.

TTING THE MACHINE INTO OPERATION

e machine is started in the following sequence.

TE: The control valves are positioned on the control panel in the correct sequence for starting and stopping.

Tail and Side conveyors - move lever of tail & side conveyor control valve (Item 12, Fig. 8) down.
Trommel Drum - move lever of Trommel control valve (Item 11, Fig. 8) down.
Main and Collection conveyor - move lever of main and collection conveyor control valve (Item 10, Fig. 8) down.
Feeder - move lever of feeder control valve (Item 9, Fig. 8) down.
When the complete machine is running empty (without material) check that all the conveyor belts are running in alignment and adjust as required according to safety instructions on page headed "Safe Operation of Powerscreen Machines" (Very Important)
Stop the feeder belt by moving the lever of feeder control valve (Item 9, Fig. 8) up to neutral position.
Fill up the feed hopper with material, set the dial on feeder flow control valve (Item 40, Fig. 8) to No. 2 and start up the feeder by moving the lever of feeder control valve (Item 9, Fig. 8) down.
Check that all conveyors belts are still running in alignment and adjust as required according to safety instructions on page headed "Safe Operation of Powerscreen Machines". (Very Important).
Fill up the feed hopper again and adjust the feeder flow control valve (Item 40, Fig. 8) to increase the feed rate to the optimum for the application in hand.

E MACHINE IS NOW READY FOR CONTINUOUS OPERATION

OPPING THE MACHINE

The feed hopper should be empty and the conveyor belts and screen free of material before the machine is stopped. Always stop the feeder conveyor first by moving the lever of the feeder control valve (Item 9, Fig. 8) to the neutral position.
Stop the rest of the machine in reverse order to the starting sequence i.e. Feeder conveyor, Main Conveyor, Trommel drum, Tail and side Conveyors.
Reduce engine speed gradually from working speed to idling speed.
Stop the engine by switching off the ignition key (Item 27, Fig. 6) after approx. 2 minutes at idling speed.

FEED CONTROL

The feed rate is determined by speed of the feed conveyor belt which is adjusted by the dial on the feeder flow control valve (Item 40, Fig. 8).

OPERATING THE REJECT GRID

To raise reject grid:

1. Place air hose on the ground in such a place where the loading shovel can drive over the hose and operate the tipping grid.

OR

Operate infra-red transmitter (Item 89, Fig. 8), pointing it in the direction of the infra-red receiver (Item 87, Fig. 8) fitted above the power unit.

OR

Press the tipping grid button (Item 36, Fig. 6) on the instrument panel (Item 22, Fig. 6).

The reject grid will lower automatically.

TENSIONING CONVEYOR BELTS

Correct tensioning of the conveyor belts should be maintained at all times. Adjustment may be carried out according to safety instructions on page headed "Safe Operation of Powerscreen Machines". (Very Important).

HYDRAULIC SYSTEM MAINTENANCE

Keep a daily check on the level of oil in the hydraulic tank by observing the hydraulic oil level indicator (Item 14, Fig. 7). If the oil in the tank falls below the level of the line on the indicator it should be topped up immediately.

The oil in the hydraulic system should be changed annually and it is recommended that the suction element (Item 57, Fig. 7) is changed when an oil change is being carried out.

The return line filter elements (Item 24, Fig. 7) should be changed when the needle on the return line filter gauge moves into the red section.

IMPORTANT - When changing or topping up the oil in the hydraulic system or when checking the filter element the utmost cleanliness should be observed at all times as impurities in the oil will ruin the system

NOTE: If the hydraulic system requires any major repairs contact your local Powerscreen dealer immediately. Hydraulic pumps, motors, valves, etc. must not be tampered with, otherwise the guarantee will be invalidated.
The filler cap (Item 52, Fig. 7) of the hydraulic tank should be cleaned every 250 hours. The air vents in the cap must be kept open to allow the hydraulic system to "breathe" - IMPORTANT.

Check the condition of all parts of the Hydraulic system regularly.

SCREEN UNIT MAINTENANCE

When the screen unit is running there should be minimal or no vibration in the Trommel frame or in the machine framework. If there is any vibration contact your local Powerscreen dealer as any such vibration must be eliminated immediately. Regular checks should be carried out on the screen meshes.

Maintenance

DAILY MAINTENANCE

Before starting engine:

Note: Before carrying out any maintenance, isolate the engine by removing ignition key and depressing one emergency stop.

1. Check engine fuel and lubrication oil levels and top up as necessary.
2. Check Hydraulic tank oil level and top up as necessary.
3. Check screen meshes for wear and material build-up. Replace or clean as necessary.
4. Check that the brushes (Item 11, Fig. 13) are adjusted to approx. 10mm inside the screen meshes and that there is no build up of any material around the bearing and shaft which may prevent the brushes from rotating freely.
5. Remove any material build-up around moving parts and ensure all rollers can rotate freely.
6. Check that all guards are in place and properly secured.
7. Check that all bolts are in place and fully tightened.

When machine is in operation

1. Check that all conveyor belts are properly aligned and adjust as necessary according to instructions on page headed "Safe Operation of Powerscreen Machines".
2. Check that the screen unit is running at approx. 20 r.p.m. This is generally found to be the optimum speed, but can be varied depending on application. Check also that the brushes are turning freely with screen

WEEKLY MAINTENANCE

1. Grease bearings according to the greasing schedule on page headed "Lubrication"
2. Examine skirting rubbers on feed hopper and all feedboots and adjust until they are just touching the conveyor belt. Replace as necessary.
3. Check conveyor belt tensions. Adjust as necessary according to instructions on page headed "Safe Operation of Powerscreen Machines".
4. Check belt cleaners on feeder, main conveyor side and tail conveyors and adjust or replace plastic strips as necessary

Maintenance

DAILY MAINTENANCE

Before starting engine:

Note: Before carrying out any maintenance, isolate the engine by removing ignition key and depressing one emergency stop.

1. Check engine fuel and lubrication oil levels and top up as necessary.
2. Check Hydraulic tank oil level and top up as necessary.
3. Check screen meshes for wear and material build-up. Replace or clean as necessary.
4. Check that the brushes (Item 11, Fig. 13) are adjusted to approx. 10mm inside the screen meshes and that there is no build up of any material around the bearing and shaft which may prevent the brushes from rotating freely.
5. Remove any material build-up around moving parts and ensure all rollers can rotate freely.
6. Check that all guards are in place and properly secured.
7. Check that all bolts are in place and fully tightened.

When machine is in operation

1. Check that all conveyor belts are properly aligned and adjust as necessary according to instructions on page headed "Safe Operation of Powerscreen Machines".
2. Check that the screen unit is running at approx. 20 r.p.m. This is generally found to be the optimum speed, but can be varied depending on application. Check also that the brushes are turning freely with screen

WEEKLY MAINTENANCE

1. Grease bearings according to the greasing schedule on page headed "Lubrication"
2. Examine skirting rubbers on feed hopper and all feedboots and adjust until they are just touching the conveyor belt. Replace as necessary.
3. Check conveyor belt tensions. Adjust as necessary according to instructions on page headed "Safe Operation of Powerscreen Machines".
4. Check belt cleaners on feeder, main conveyor side and tail conveyors and adjust or replace plastic strips as necessary

Lubrication

ENGINE LUBRICATION

For details of engine lubrication see engine handbook

GEARBOX LUBRICATION (Item 15, Fig. 3)

Bongfiglioli gearbox is "Oil lubricated" and maintenance should not be required. If however this is necessary, top up with Shell Tivella WB synthetic gear oil (or equivalent).

GREASING SCHEDULE

The following greasing schedule should be observed:

Fig	Item	Description	Frequency	Grease Gun Strokes
2	54	Feeder Tail Drum Bearings	100 hours	2
3	9	Feeder Drive Drum Bearings	100 hours	2
4	7	Incline Conveyor Tail Drum Bearings	100 hours	2
5	7	Incline Conveyor Head Drum Bearings	100 hours	2
11	11	Collection Conveyor Drive Drum Bearings	100 hours	2
11	74	Collection Conveyor Tail Drum Bearings	100 hours	2
12	6	Trommel Drum Support Wheel Bearings	70 Hours	10
12	38	Trommel Drum Retaining Wheel Bearings	70 Hours	10
12	53	Idler Sprocket Bearing	50 Hours	2
14	9	Side Conveyor Tail Drum Bearings	100 hours	2
15	9	Side Conveyor Drive Drum Bearings	100 hours	2
16	9	Tail Conveyor Tail Drum Bearings	100 hours	2
17	9	Tail Conveyor Drive Drum Bearings	100 hours	2

RECOMMENDED OILS AND GREASES

Engine

As specified in the Deutz Operation Manual heavy duty lubricating oil meeting the requirements of **API** quality grade **CD/SE** or **CD/SF**, must be used. Shell Fortisol 15W/40 (or equivalent) which is suitable for ambient temperatures above -10c, is recommended.

Hydraulic System

BELOW 30c	Shell Tellus 37 (or equivalent)
ABOVE 30c	Shell Tellus 100 (or equivalent)

Lubrication Points

BEARINGS (General)	Shell Alvania EP2 (or equivalent)
GEARBOX (Grease Filled)	Shell Tivella Compound A (or equivalent)
GEARBOX (Oil Filled)	Shell Tivella WB (or equivalent)

Hydraulic Circuit Diagram

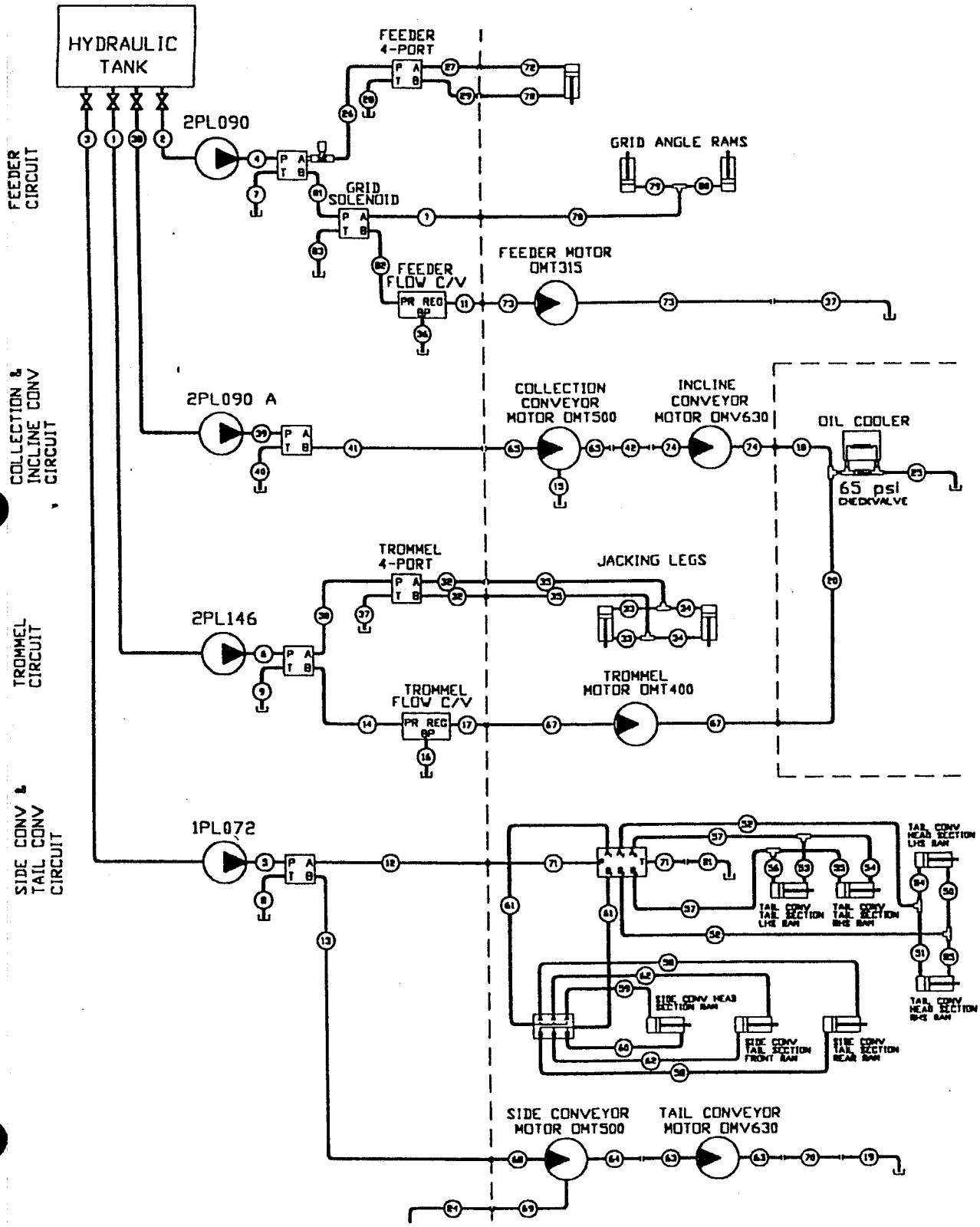

Wiring Circuit Diagrams

WIRING DIAGRAM FOR STARTING CHARGING AND PREHEAT

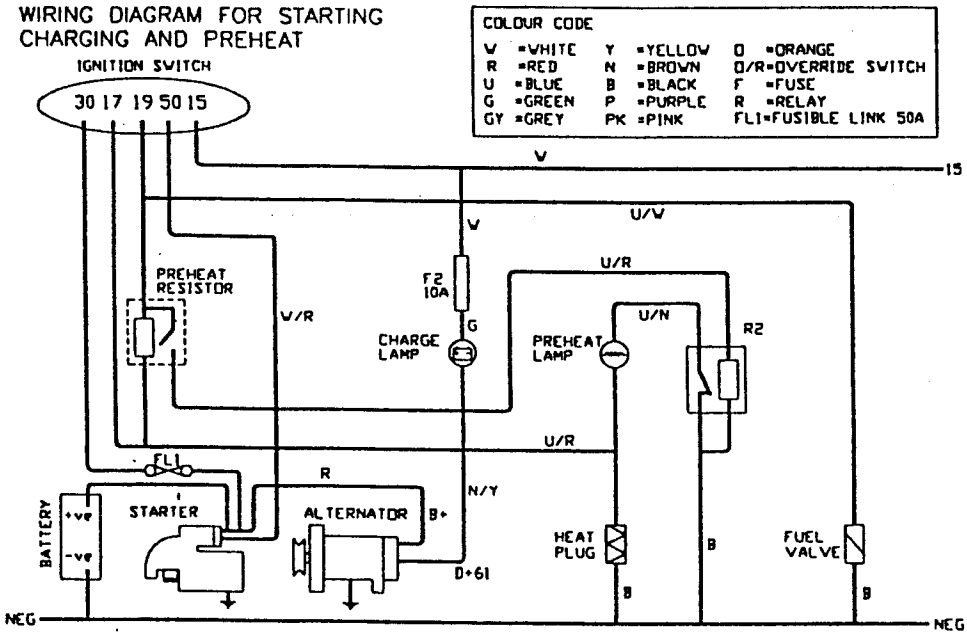

WIRING DIAGRAM FOR STOP SYSTEMS AND TIPPING GRID

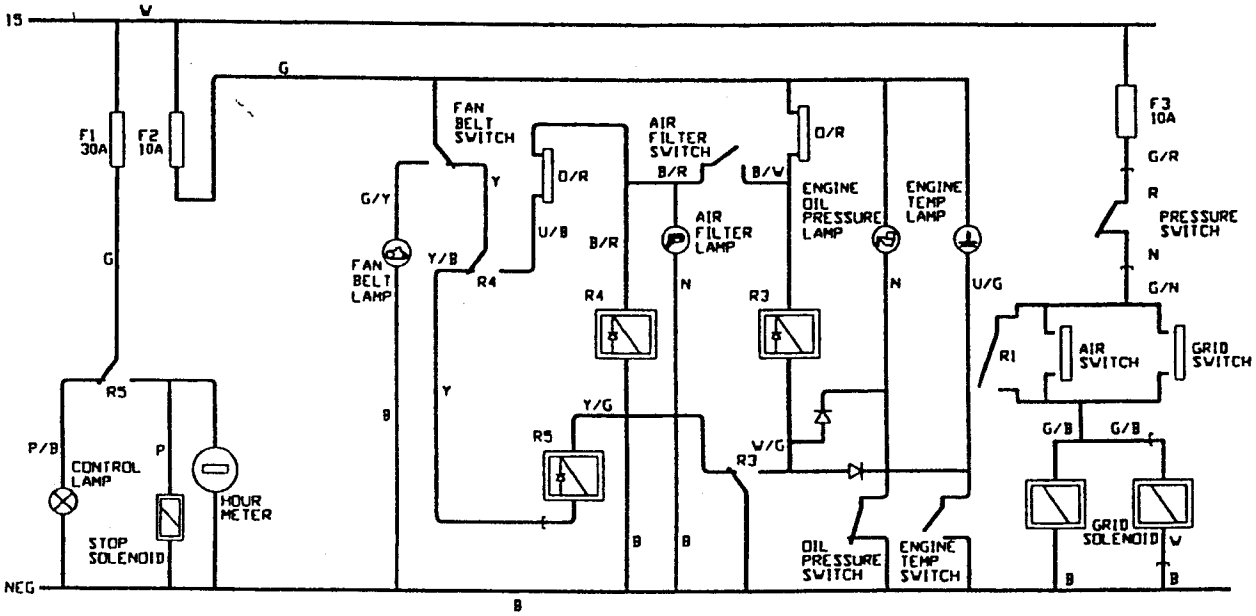

Safe Operation Of Powerscreen Machines.

Powerscreen machines are guarded to prevent injury from moving parts. It is important that each operator is aware of the following rules which must be strictly adhered to.

1. **All guard doors must be in position when the machine is in operation.**
2. **Always wear a safety helmet and hearing protection in the vicinity of the machine when it is in operation.**
3. **Always adjust belts according to the correct procedure below.**
4. **Never carry out maintenance when machine is in operation. Always stop the engine/electric motor, remove key or fuse to isolate the machine and ensure other workers are aware that you are carrying out work.**
5. **Never clean or lubricate any moving parts (e.g. rollers, end drums, chain drives) when the machine is in operation.**
6. **Ensure all Pins, Nuts, Bolts are securely fastened.**
7. **Stay clear of the reject grid.**
8. **Do not use belt dressings.**
9. **Never climb on conveyors for inspection or maintenance**

ANY VIOLATION OF THE ABOVE COULD LEAD TO SERIOUS INJURY.

Procedure for tensioning and adjusting conveyor belts, in complete safety is as follows:-

ONLY Feeder conveyor and conveyors which can be adjusted and observed without opening guard doors.

1. Start engine/electric motor and start belt which requires adjustment.
2. Observe belt through viewing apertures and decide which side of the drum needs more tension. Note that if the belt is 'tracking off' to the right hand side of the drum then the right hand side will need more tension.
3. Operate the belt adjusters to provide more tension on the appropriate side of the drum.
4. Observe the belt running empty and loaded and ensure that it is now "tracking" correctly.

ONLY Conveyors which require guard doors to be opened for adjustment of the conveyor belt

1. Start engine/electric motor and start belt which requires adjustment and run for short period of time.
2. STOP engine/electric motor and remove key or fuse to isolate.
3. Open guard door and observe drum. Note if the belt has "tracked off" to the right hand side of the drum, then the right hand side will need more tension.
4. Operate belt adjusters to provide more tension on the appropriate side of the drum.
5. CLOSE guard door
6. Repeat steps 1 to 5 until belt is tracking correctly.

ANY VIOLATION OF THE ABOVE COULD LEAD TO SERIOUS INJURY.

Spare Parts Ordering Procedure

When ordering spare parts, the following must be carefully observed.

1. State the type of machine and the machine serial number. The serial number may be found on the machine plate or on the first page of this manual.
2. State clearly the Item No., the description and the Fig. No. for the part required.
3. State the quantity being ordered.
4. State name and address clearly as well as method of delivery required.
5. Engine spare parts should be obtained from your nearest Engine Agent. The Name, Address and Telephone No. may be found on the first page of this manual.

N.B. Left and Right Hand of Machine

Left and Right hand of machine is obtained by viewing the machine from the towbar end.

When purchasing parts customers should, in their own interest, always use genuine Powerscreen International parts.

Parts that have not been supplied by Powerscreen International Distribution Ltd., Powerscreen Ltd., or Powerscreen of America Inc., cannot be relied upon for correct material, dimensions or finish. Powerscreen International Distribution Ltd., Powerscreen Ltd., or Powerscreen of America Inc

Index to Spare Parts List

Section	Description	Item	Fig.
A	Reject Grid:	Grid, Side Extensions, Tipping Frame, Hyd. Cylinders, Bars	1
B	Feeder Unit:	Guards, Hopper, Support Legs, Tail Drum, Belt Cleaner, Rollers	2
B	Feeder Unit:	Drive Drum, Gearbox, Hydraulic Motor, Hopper Outlet, Belt Scraper	3
C	Incline Conveyor:	Drive Drum, Hydraulic Motor, Belt Scraper, Feedboot, Rollers, Jacking Legs, Guards, Frame	4
C	Incline Conveyor:	Head Drum, Belt Scraper, Skirting, Engine Canopy	5
D	Power Unit:	Frame, Battery, Control Panel, Exhaust, Air Cleaner	6
D	Power Unit:	Diesel Tank, Fuel Lines, Hyd. Tank, Hyd. Filters, Suction & Return Hoses, Hydraulic Hoses	7
D	Power Unit:	Control Valves, Hydraulic Hoses, Grid Powerpack, Remote Control	8
D	Power Unit:	Engine, Hyd. Pumps, Pump Couplings, Oil Return, Hyd. Hoses	9
E	Chassis:	Axle, Wheels, Suspension, Braking Components, Chassis	10
E	Collection Conveyor:	Drive Drum, Hydraulic Motor, Belt Cleaner, Rollers, Tail Drum	11
F	Trommel Frame:	Support Wheels, Retaining Wheel, Plummer Block, Trommel Drive, Hydraulic Motor, Guards	12
F	Trommel Frame:	Trommel Drum, Brushes, Meshes, Pivot Assembly, Hydraulic Cylinder, Guide Doors	13
G	Side Conveyor: Tail Section	Tail Drum, Belt Scraper, Rollers, Feedboot, Pivot Assembly	14
G	Side Conveyor: Head Section	Drive Drum, Motor Coupling, Belt Cleaner, Guards, Hydraulic Cylinders	15
H	Tail Conveyor: Tail Section	Tail Drum, Belt, Scraper, Feedboot, Rollers, Pivot Assembly, Control Valve, Hydraulic Hoses, Hydraulic Cylinders	16
H	Tail Conveyor: Head Section	Drive Drum, Motor, Coupling, Guards, Belt Cleaner, Rollers, Jacking Legs	17
H	Lights:	Lighting Board, Lights, Light Holders, Marker Boards, Brakes and Light Connectors	18

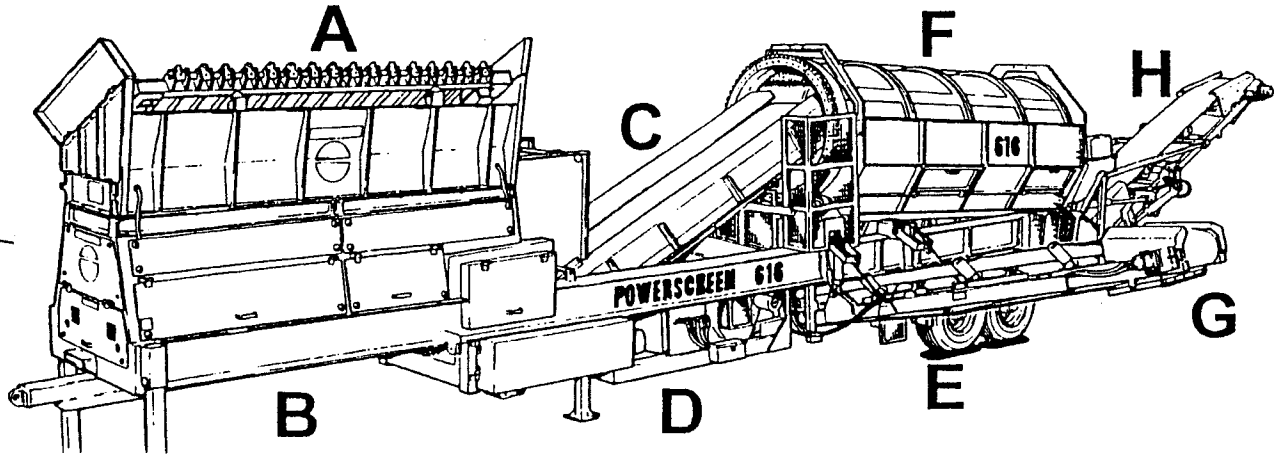

DZ® MODEL 1463B

INDUSTRIAL TUB GRINDER

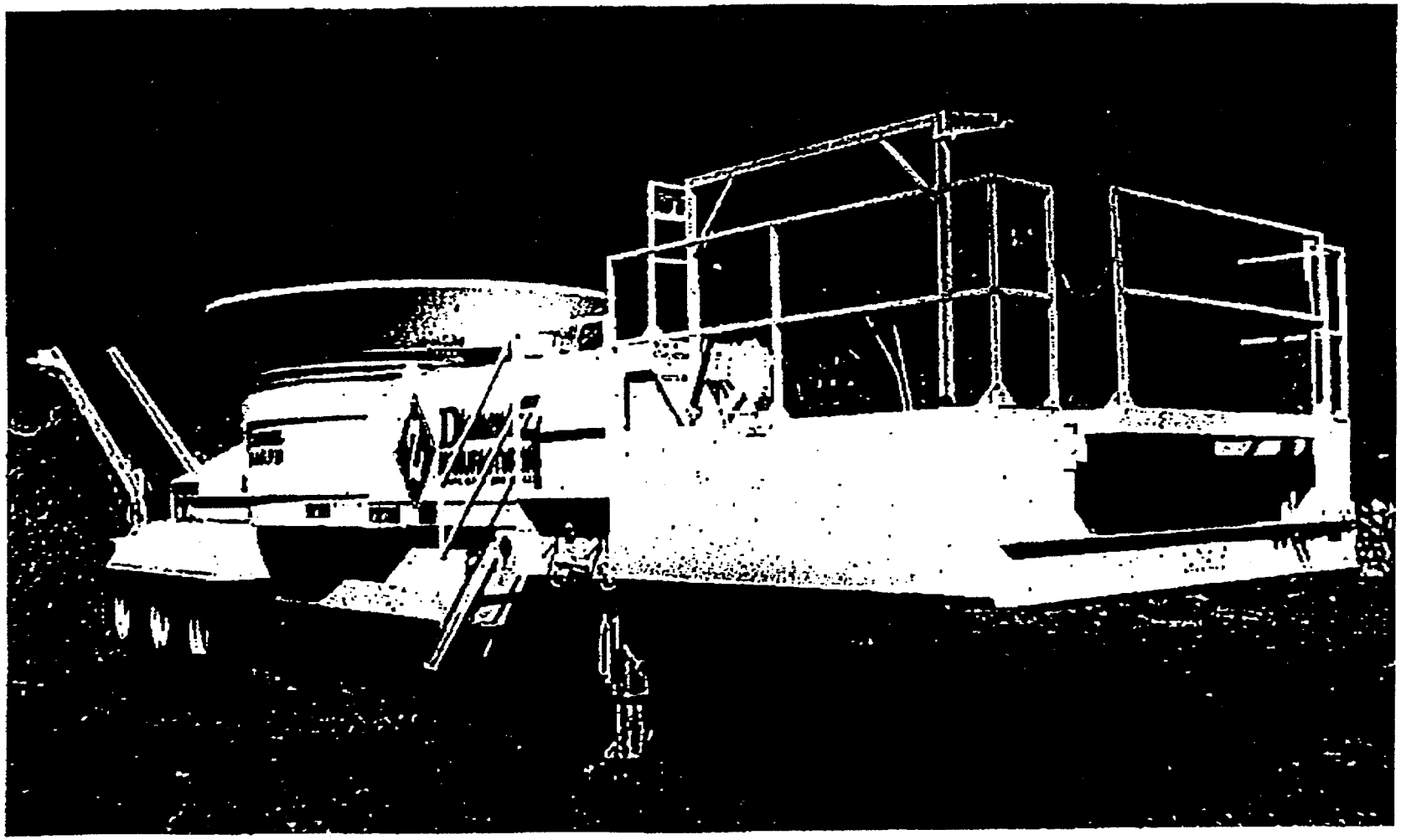

Diamond Z Manufacturing

11299 BASS LANE ♦ CALDWELL, ID 83605 ♦ (800) 949-2383 ♦ FAX (208) 585-2112
E-Mail diamondz@diamondz.com ♦ Visit our Web Site at http://www.diamondz.com

DZ® MODEL 1463B INDUSTRIAL TUB GRINDER

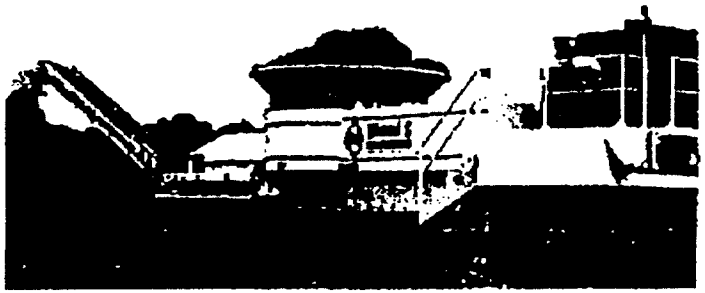

U.S. Patent Nos. 4,997,135; 6,045,072

The 1463B is the standard by which all tub grinders are measured. No other grinder can match its power, at up to 1,650 horsepower, or its versatility. It grinds wood waste, green waste, and tires at unparalleled rates. Since the first one produced in 1988, not one has been worn beyond use and all continue to out-perform all of the competition, producing the industry's highest resale value.

Engine
- Caterpillar or Detroit
- 860 to 1,650 Horsepower

Hammermill & Hammers
- 63" Hammermill
- 26 @ 120 lbs. Each (Fixed)
- Industry's Largest Deflector Shield for Safety

Drive
- Fluid Coupling (Replaces Manual Clutch Assembly) With Powerbands

Capacities
- Fuel - 850 Gallons
- Hydraulic - 120 Gallons

Dimensions
- Length - 46'6" (Transport)
- Tub Diameter - 14'
- Width - 11'11" (Transport)
- Weight - 97,000 lbs. (Approx.)
- Screen Area - 6,758 sq. inches
- Conveyor Widths
  Phase I - 60"
  Phase II - 36"

Radio Remote
- Standard
- Self Diagnostic

Optional Items
- Hydraulic Rod Puller
- Fuel Transfer Pump
- Magnetic Head Pulley w/Chute
- Vandalism Lock Package
- Engine Enclosure
- Swinging Hammers
- Tool Box
- UHMW on Phase I & II Conveyors
- Radial Stacking Phase II Conveyor
- Tire Grinding Wear Parts Package
- Auxiliary Hydraulic Power
- Air Compressor
- Flexaire Fan
- Air Ride Suspension

Production Rates

Stumps & Logs	Up to 100 Tons or 300 Yards Per Hour
Brush & Yard Waste	Up to 85 Tons or 340 Yards Per Hour
Pallets & Construction Waste	Up to 120 Tons or 800 Yards Per Hour
Railroad Ties	Up to 90 Tons or 360 Yards Per Hour
Solid Waste	Up to 60 Tons or 225 Yards Per Hour
Mixed Passenger & Truck Tires	Up to 1500 Tires Per Hour

Tri-State Process Equipment
3108 Chamber Dr.
Monroe, NC 28110
1-704-289-1556 1-800-728-1403
New Web -site www.TriProEq.com

Diamond Z reserves the right to improve our products and make changes without notice to the customer. Actual product offered for sale may vary in design, available optional items, required attachments and safety features.

Diamond Z MANUFACTURING

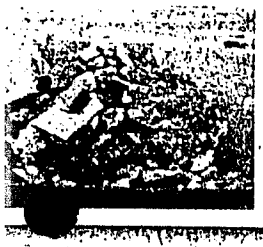

Custom Crushing Inc.

18200 Westmoreland Road. • Cornelius, NC 28031 • 704.791.2882 • Fax 987.0150

October 3, 2000

Mr. Dan Hardin
Air Hygienist, Env. Protection
Mecklenburg County Government
700 North Tryon Street
Charlotte, NC. 28202

Dear Mr. Hardin,

The intent of this letter is to provide the required information for the, "Registration of Air Pollution Sources," (Section 2.0202, Mecklenburg County Air Pollution Control Ordinance).

As I mentioned in our previous letter dated, September 15, 2000, our company, Custom Crushing, Inc. has recently purchased a mobile rock-crushing unit. This unit is a 1988 Bohringer-Eagle 1000 crusher, which is rated at 100 tons per hour. We also purchased a 20' conveyor, a 30" X 60' radial stacker and a 36" X 60' conveyor.

The principal officer of our company is Mr. Charlie Ainge. Our business address is 18200 Westmoreland Road, Cornelius, NC. 28031. I am also a partner in the business and possess over 20 years crushing experience with the majority of the last 10 on recycling. Our business was founded for the sole purpose of performing recycling services for landfills, reprocessing facilities, and demolition projects.

The project we are in the process of completing involves the recycling of approximately 10,000 tons of concrete materials at North Mecklenburg Landfill (NML). The projects we are interested in performing will be similar to that of NML. We have recently been selected to provide a proposal to recycle inert debris from a demolition project in Charlotte, NC.

The rock crusher unit is powered by a Cummins 325 horsepower diesel engine. The fuel that powers the unit is #2 diesel and the fuel capacity is 200 gallons. This provides us with approximately 20 hours of operating time. The engine is equipped with a hospital muffler and a four-foot emissions stack. See attached Rock Crusher Flow Diagram.

The following emission calculations for crushed stone processing have been provided for your review:

NML Reprocessing-Actual Emissions

8/28-9/2/00 30 tons/hour x 8 hours/day x 6 days = 1440 tons
1440tons x .00059* = .85 lbs. (Total emissions)

9/4-9/13/00 60 tons/hour x 8 hours/day x 9 days = 4320 tons
4320tons x .00059 = 2.54 lbs. (Total emissions)

9/13-9/19/00 Rock crusher did not operate

*The Emission Factor of .00059 was selected from Table 11.19.2-2 for Tertiary Crushing (Controlled).

Maximum Operating Capacity-Total Emissions

100 tons/hour x 24 hours x 365 days = 876,000 tons
876,000 tons x .00059 = 517 lbs./year

The maximum operating capacity emissions total of 517 lbs./year calculated above is well below the maximum allowable limit of 5 tons/year. The actual emissions total for each of our projects will be calculated to ensure compliance with the Mecklenburg County Air Pollution Control Ordinance.

We would like to work very closely with your office by providing our operating schedule to you on all projects in Mecklenburg County. As we are informed of new projects, we will send you a project description including type of material to be processed, project location, and estimated start and completion dates. We appreciate your assistance and look forward to developing a long lasting relationship with you and the county.

Sincerely,

Larry Eilers

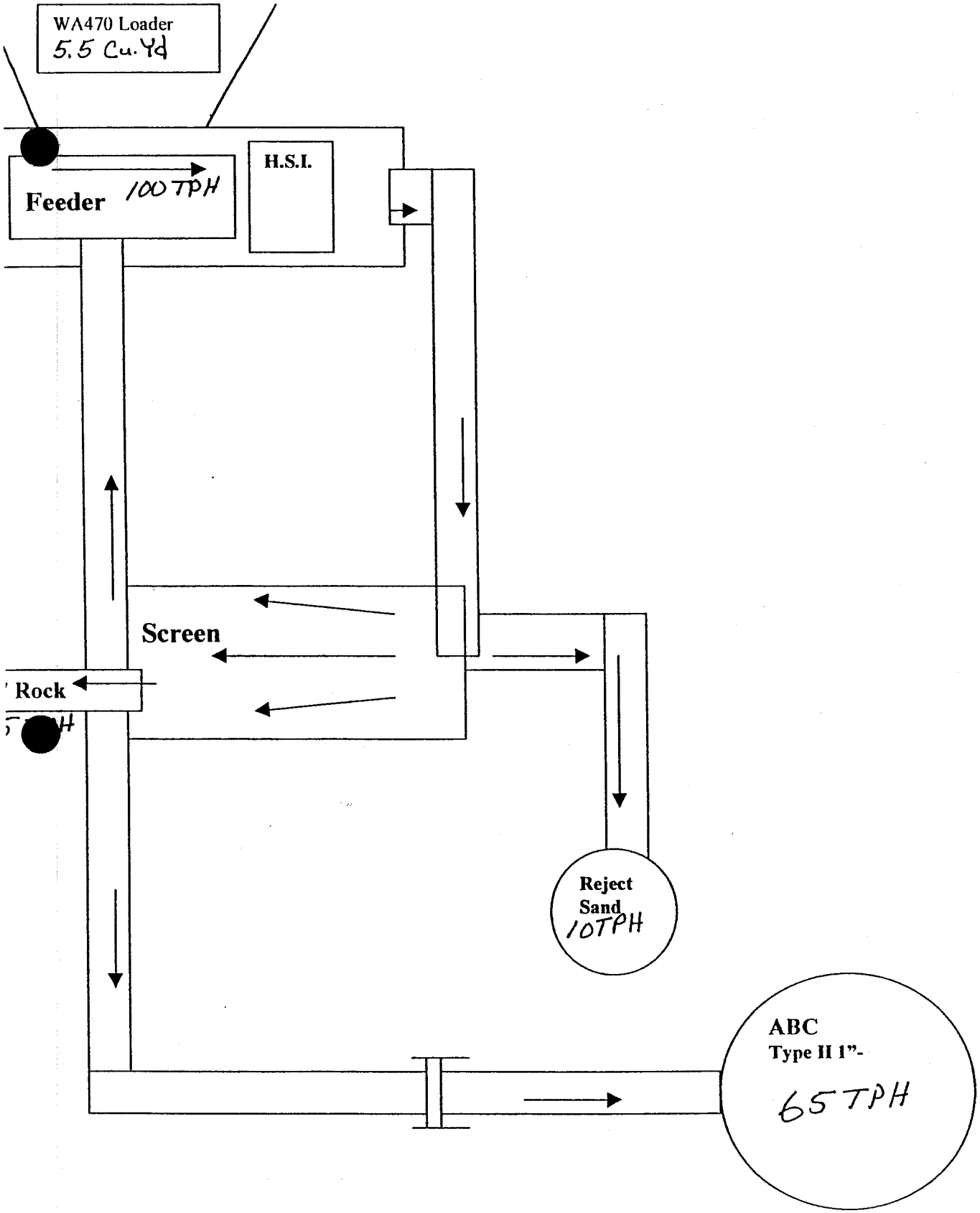

Custom Crushing, Inc.

Flow Diagram

North Carolina Department of Environment
and Natural Resources
Division of Air Quality

Michael F. Easley, Governor
William G. Ross Jr., Secretary
Alan W. Klimek, P.E., Director

NCDENR

June 19, 2001

Mr. Ron Gilkerson
Griffin Brothers Companies
19109 W Catawba Avenue
Suite 118
Cornelius, North Carolina 28031-5613

Subject: Air Quality Permit Determination
Griffin Brothers Companies
Cornelius, North Carolina

Dear Mr. Gilkerson:

This Office is in receipt of your fax received June 11, 2001, in which you requested that this Office determine whether an Air Quality Permit is necessary for the construction and operation of a mobile crusher and associated diesel-fired engine to be operated by Griffin Brothers Companies.

Personnel of the Division of Air Quality of this Office have reviewed your letter relative to applicability to Air Quality Permits, and our determinations are listed as follows:

North Carolina Administrative Code 15A 2Q, which was amended on July 1, 2000, includes Section .0102, "Activities Exempted from Permit Requirement" (one copy is enclosed). Paragraph .0102(c)(2) states in part: "The following activities do not need a permit ...because of size or production rate:.... (B) combustion and heat transfer equipment: (iv) emergency use generators and other internal combustion engines not regulated by rules adopted under Title II of the Federal Clean Air Act, except self-propelled vehicles, that have a rated capacity of no more than...(III)...410 horsepower for diesel-fired or kerosene-fired engines."

Based upon the information submitted in your fax received on June 11, 2001, it appears that the diesel-fired engine has a heat input rating of 325 horsepower which is below the 410 horsepower limit in the above referenced Section of the new rules.

Furthermore, Paragraph .0102(c)(2)(E)(ii) states: "any facility whose actual emissions of particulate, sulfur dioxide, nitrogen oxides, volatile organic compounds, or carbon monoxide before air pollution control devices, i.e., uncontrolled emissions, are each less than five tons per year, whose potential emissions of all hazardous air pollutant are below their lesser quantity cutoff emission rate:"

Based upon the information submitted in your fax received on June 11, 2001, it appears that

the mobile crusher and associated diesel-fired engine actual PM/SO_2/NOx/VOC/CO emissions are each less than the five ton per year exemption levels in the above referenced Section of the new rules and that the potential emissions of all hazardous air pollutants are below their lesser quantity cutoff emission rates.

Therefore, this Office has determined that an Air Quality Permit is NOT required for the construction and operation of the mobile crusher and associated diesel-fired engine to be operated by Griffin Brothers Companies. It should be noted that this exemption from the permitting requirement does not exempt Griffin Brothers Companies, from complying with the applicable emission control standards, including 15A NCAC 2D .0521, "Control of Visible Emissions". Furthermore, should you decide to modify the process such that the result is an increase of emissions of any air pollutants including toxic air pollutants, an Air Quality Permit modification may be required and Griffin Brothers Companies should submit a permit application (one copy is enclosed) to this Office 90 days prior to such actions.

It should also be noted that future Regulations including Federal Maximum Achievable Control Technology (MACT) for hazardous air pollutant (HAP) may be promulgated and adopted by the Division which apply to this type of manufacturing facility. If so, Griffin Brothers Companies may be required to apply for an Air Permit modification at that date. The Division will attempt to notify you of any Regulation changes that would require your facility to obtain an Air Permit modification.

This exemption from the permitting requirement is based upon your statement that this source will be operated under the threshold levels as outlined in the Regulation. If you have any questions with reference to the above matter, please do not hesitate to contact Angela Hall or me at (704) 663-1699.

Sincerely,

Jamie Watkins for

Michael S. Landis
Regional Supervisor

ADH:adh

c: Central files

Attachments

G:\DEM\AQ\WPDATA\COUNTIES\GASTON\MISC\GRIFFINB.LET

(iii) not to violate any applicable emission control standard when operating at maximum design capacity or maximum operating rate, whichever is greater.

(c) Because an activity is exempted from being required to have a permit does not mean that the activity is exempted from any applicable requirement or that the owner or operator of the source is exempted from demonstrating compliance with any applicable requirement.

(d) Emissions from stationary source activities identified in Paragraph (b) of this Rule shall be included in determining compliance with the toxic air pollutant requirements under 15A NCAC 2D .1100 or 2Q .0700 according to 15A NCAC 2Q .0702 (exemptions from air toxic permitting).

(e) The owner or operator of a facility or source claiming an exemption under Paragraph (b) of this Rule shall provide the Director documentation upon request that the facility or source is qualified for that exemption.

History Note: Filed as a Temporary Adoption Eff. March 8, 1994 for a period of 180 days or until the permanent rule becomes effective, whichever is sooner;
Authority G.S. 143-215.3(a)(1); 143-215.107(a)(4); 143-215.108;
Eff. July 1, 1994;
Amended Eff. April 1, 1999; July 1, 1998; July 1, 1997; November 1, 1996;
Filed as a Temporary Amendment Eff. December 1, 1999 for a period of 180 days or until the permanent rule becomes effective, whichever is sooner.

.0103 DEFINITIONS

For the purposes of this Subchapter, the definitions in G.S. 143-212 and 143-213 and the following definitions apply:

(1) "Air Pollutant" means an air pollution agent or combination of such agents, including any physical, chemical, biological, radioactive substance or matter which is emitted into or otherwise enters the ambient air. Water vapor is not considered to be an air pollutant.

(2) "Allowable emissions" mean the maximum emissions allowed by the applicable rules contained in 15A NCAC 2D or by permit conditions if the permit limits emissions to a lesser amount.

(3) "Alter or change" means to make a modification.

(4) "Applicable requirements" means:

(a) any requirement of Section .0500 of this Subchapter;

(b) any standard or other requirement provided for in the implementation plan approved or promulgated by EPA through rulemaking under Title I of the federal Clean Air Act that implements the relevant requirements of the federal Clean Air Act including any revisions to 40 CFR Part 52;

(E) miscellaneous:

(i) any source whose emissions would not violate any applicable emissions standard and whose potential emissions of particulate, sulfur dioxide, nitrogen oxides, volatile organic compounds, and carbon monoxide before air pollution control devices, i.e., potential uncontrolled emissions, are each no more than five tons per year and whose potential emissions of hazardous air pollutants are below their lessor quantity cutoff except:

(I) storage tanks,

(II) fuel combustion equipment,

(III) space heaters burning waste oil,

(IV) generators, excluding emergency generators, or other non-self-propelled internal combustion engines,

(V) bulk gasoline plants,

(VI) printing, paint spray booths, or other painting or coating operations,

(VII) sawmills,

(VIII) perchloroethylene dry cleaners, or

(IX) electrostatic dry powder coating operations,

provided that the total potential emissions of particulate, sulfur dioxide, nitrogen oxides, volatile organic compounds, and carbon monoxide from the facility are each less than 40 tons per year and the total potential emissions of all hazardous air pollutants are below their lesser quantity cutoff emission rates or provided that the facility has an air quality permit;

(ii) any facility whose actual emissions of particulate, sulfur dioxide, nitrogen oxides, volatile organic compounds, or carbon monoxide before air pollution control devices, i.e., uncontrolled emissions, are each less than five tons per year, whose potential emissions of all hazardous air pollutants are below their lesser quantity cutoff emission rate:

(iii) any source that only emits hazardous air pollutants that are not also a particulate or a volatile organic compound and whose potential emissions of hazardous air pollutants are below their lesser quantity cutoff emission rates; or

(iv) any incinerator covered under Subparagraph (c)(4) of 15A NCAC 2D .1201;

(F) case-by-case exemption: activities that the applicant demonstrates to the satisfaction of the Director:

(i) to be negligible in their air quality impacts,

(ii) not to have any air pollution control device, and

(III) The combustion gases from the heater are vented to the ambient air;

(iv) emergency use generators and other internal combustion engines not regulated by rules adopted under Title II of the federal Clean Air Act, except self-propelled vehicles, that have a rated capacity of no more than:

(I) 310 kilowatts (electric) or 460 horsepower for natural gas-fired engines,

(II) 830 kilowatts (electric) or 1150 horsepower for liquefied petroleum gas-fired engines,

(III) 270 kilowatts (electric) or 410 horsepower for diesel-fired or kerosene-fired engines, or

(IV) 21 kilowatts (electric) or 31 horsepower for gasoline-fired engines;

(v) portable generators and other portable equipment with internal combustion engines not regulated by rules adopted under Title II of the federal Clean Air Act, except self-propelled vehicles, that operate at the facility no more than a combined 350 hours for any 365-day period provided the generators or engines have a rated capacity of no more than 750 kilowatt (electric) or 1100 horsepower each and provided records are maintained to verify the hours of operation;

(vi) peak shaving generators that produce no more than 325,000 kilowatt-hours of electrical energy for any 12-month period provided records are maintained to verify the energy production on a monthly basis and on a 12-month basis;

(C) gasoline distribution: bulk gasoline plants with an average daily throughput of less than 4000 gallons;

(D) processes:

(i) graphic arts operations, paint spray booths or other painting or coating operations without air pollution control devices (water wash and filters that are an integral part of the paint spray booth are not considered air pollution control devices), and solvent cleaning operations located at a facility whose facility-wide actual emissions of:

volatile organic compounds are less than five tons per year

(Graphic arts operations, coating operations, and solvent cleaning operations are defined in 15A NCAC 2Q .0803);

(ii) sawmills that saw no more than 2,000,000 board feet per year provided only green wood is sawed;

(iii) perchloroethylene dry cleaners that emit less than 13,000 pounds of perchloroethylene per year;

(iv) electrostatic dry powder coating operations with filters or powder recovery systems including electrostatic dry powder coating operations equipped with curing ovens with a heat input of less than 10,000,000 Btu per hour;

protection, except those units used as or in conjunction with air pollution control equipment;

(viii) equipment not vented to the outdoor atmosphere with the exception of equipment that emits volatile organic compounds;

(ix) equipment that does not emit any regulated air pollutants;

(x) facilities subject only to a requirement under 40 CFR Part 63 (This Subpart does not apply when a control device is used to meet a MACT or GACT emission standard.);

(xi) sources for which there are no applicable requirements

(xii) animal operations not required to have control technology under 15A NCAC 2D .1800 (If an animal operation is required to have control technology, it shall be required to have a permit under this Subchapter).

(2) activities exempted because of size or production rate:

(A) storage tanks:

(i) above-ground storage tanks with a storage capacity of no more than 1100 gallons storing organic liquids with a true vapor pressure of no more than 10.8 pounds per square inch absolute at 70°F; or

(ii) underground storage tanks with a storage capacity of no more than 2500 gallons storing organic liquids with a true vapor pressure of no more than 10.8 psi absolute at 70°F;

(B) combustion and heat transfer equipment:

(i) fuel combustion equipment, except for internal combustion engines, firing exclusively kerosene, No. 1 fuel oil, No. 2 fuel oil, equivalent unadulterated fuels, or a mixture of these fuels or one or more of these fuels mixed of with natural gas or liquefied petroleum gas with a heat input of less than:

(I) 10 million Btu per hour for which construction, modification, or reconstruction commenced after June 9, 1989; or

(II) 30 million Btu per hour for which construction, modification, or reconstruction commenced before June 10, 1989;

(ii) fuel combustion equipment, except for internal combustion engines, firing exclusively natural gas or liquefied petroleum gas or a mixture of these fuels with a heat input rating less than 65 million Btu per hour;

(iii) space heaters burning waste oil if:

(I) The heater burns only oil that the owner or operator generates or used oil from do-it-yourself oil changers who generate used oil as household wastes;

(II) The heater is designed to have a maximum capacity of not more than 500,000 Btu per hour; and

(F) wastewater treatment processes: industrial wastewater treatment processes or municipal wastewater treatment processes for which there are no applicable requirements;

(G) gasoline distribution: gasoline service stations or gasoline dispensing facilities;

(H) dispensing equipment: equipment used solely to dispense diesel fuel, kerosene, lubricants or cooling oils;

(I) solvent recycling: portable solvent distillation systems used for on-site solvent recycling if:

(i) The portable solvent distillation system is not:

(I) owned by the faciiity, and

(II) operated at the facility for more than seven consecutive days; and

(ii) The material recycled is

recycled at the site of origin;

(J) processes:

(i) small electric motor burn-out ovens with secondary combustion chambers or afterburners;

(ii) small electric motor bake-on ovens;

(iii) burn-off ovens for paint-line hangers with afterburners;

(iv) hosiery knitting machines and associated lint screens, hosiery dryers and associated lint screens, and hosiery dyeing processes where bleach or solvent dyes are not used;

(v) blade wood planers planing only green wood;

(K) solid waste landfills: municipal solid waste landfills (This Part does not apply to flares and other sources of combustion at solid waste landfills.);

(L) miscellaneous:

(i) motor vehicles, aircraft, marine vessels, locomotives, tractors or other self-propelled vehicles with internal combustion engines;

(ii) non-self-propelled non-road engines, except generators, regulated by rules adopted under Title II of the federal Clean Air Act;

(iii) equipment used for the preparation of food for direct on-site human consumption;

(iv) a source whose emissions are regulated only under Section 112(r) or Title VI of the federal Clean Air Act;

(v) exit gases from in-line process analyzers;

(vi) stacks or vents to prevent escape of sewer gases from domestic waste through plumbing traps;

(vii) refrigeration equipment that is consistent with Section 601 through 618 of Title VI (Stratospheric Ozone Protection) of the federal Clean Air Act, 40 CFR Part 82, and any other regulations promulgated by EPA under Title VI for stratospheric ozone

(iv) use of fire fighting equipment;

(v) paving parking lots; or

(vi) replacement of existing equipment with equipment of the same size, type, and function that does not result in an increase to the actual or potential emission of regulated air pollutants and that does not affect the compliance status, and with replacement equipment that fits the description of the existing equipment in the permit, including the application, such that the replacement equipment can be operated under that permit without any changes in the permit;

(B) air conditioning or ventilation: comfort air conditioning or comfort ventilating systems which do not transport, remove, or exhaust regulated air pollutants to the atmosphere;

(C) laboratory activities:

(i) bench-scale, on-site equipment used exclusively for chemical or physical analysis for quality control purposes, staff instruction, water or wastewater analyses, or non-production environmental compliance assessments;

(ii) bench-scale experimentation, chemical or physical analyses, training or instruction from not-for-profit, non-production educational laboratories;

(iii) bench-scale experimentation, chemical or physical analyses, training or instruction from hospitals or health laboratories pursuant to the determination or diagnoses of illness; or

(iv) research and development laboratory activities that are not required to be permitted under Section .0500 of this Subchapter provided the activity produces no commercial product or feedstock material;

(D) storage tanks:

(i) storage tanks used solely to store fuel oils, kerosene, diesel, crude oil, used motor oil, lubricants, cooling oils, natural gas or liquefied petroleum gas;

(ii) storage tanks used to store gasoline for which there are no applicable requirements except Stage I controls under 15A NCAC 2D .0928;

(iii) storage tanks used solely to store inorganic liquids; or

(iv) storage tanks or vessels used for the temporary containment of materials resulting from an emergency response to an unanticipated release of hazardous materials;

(E) combustion and heat transfer equipment:

(i) space heaters burning distillate oil, kerosene, natural gas, or liquefied petroleum gas operating by direct heat transfer and used solely for comfort heat;

(ii) residential wood stoves, heaters, or fireplaces;

(iii) hot water heaters which are used for domestic purposes only and are not used to heat process water;

.0102 ACTIVITIES EXEMPTED FROM PERMIT REQUIREMENTS

(a) This Rule does not apply to facilities required to have a permit under Section .0500 of this Subchapter. This Rule applies only to permits issued under Section .0300 of this Subchapter.

(b) If a source is subject to any of the following rules, then the source is not exempted from permit requirements, and the exemptions in Paragraph (b) of this Rule do not apply:

(1) new source performance standards under 15A NCAC 2D .0524 or 40 CFR Part 60, except:

(A) 40 CFR Part 60, Subpart Dc, industrial, commercial, and institutional steam generating units;

(B) 40 CFR Part 60, Subparts K, Ka, or Kb, volatile organic liquid storage vessels;

(C) 40 CFR Part 60, Subpart AAA, new residential wood heaters; or

(D) 40 CFR Part 60, Subpart WWW, municipal solid waste landfills;

(2) national emission standards for hazardous air pollutants under 15A NCAC 2D .1110 or 40 CFR Part 61, except asbestos demolition and renovation activities;

(3) prevention of significant deterioration under 15A NCAC 2D .0530;

(4) new source review under 15A NCAC 2D .0531 or .0532;

(5) sources of volatile organic compounds subject to the requirements of 15A NCAC 2D .0900 that are located in Mecklenburg County in accordance with 15A NCAC 2D .0902;

(6) sources required to apply maximum achievable control technology (MACT) for hazardous air pollutants under 15A NCAC 2D .1109, .1111, .1112, or 40 CFR Part 63 that are required to have a permit under Section .0500 of this Subchapter;

(7) sources at facilities subject to 15A NCAC 2D .1100. (If a source does not emit a toxic air pollutant for which the facility at which it is located has been modeled, it shall be exempted from needing a permit if it qualifies for one of the exemptions in Paragraph (b) of this Rule).

(c) The following activities do not need a permit or permit modification under Section .0300 of this Subchapter; however, the Director may require the owner or operator of these activities to register them under 15A NCAC 2D .0200:

(1) activities exempted because of category:

(A) maintenance, upkeep, and replacement:

(i) maintenance, structural changes, or repairs which do not change the capacity of such process, fuel-burning, refuse-burning, or control equipment, and do not involve any change in quality or nature or increase in quantity of emission of regulated air pollutants;

(ii) housekeeping activities or building maintenance procedures, including painting buildings, resurfacing floors, roof repair, washing, portable vacuum cleaners, sweeping, use and associated storage of janitorial products, or insulation removal;

(iii) use of office supplies, supplies to maintain copying equipment, or blueprint machines;

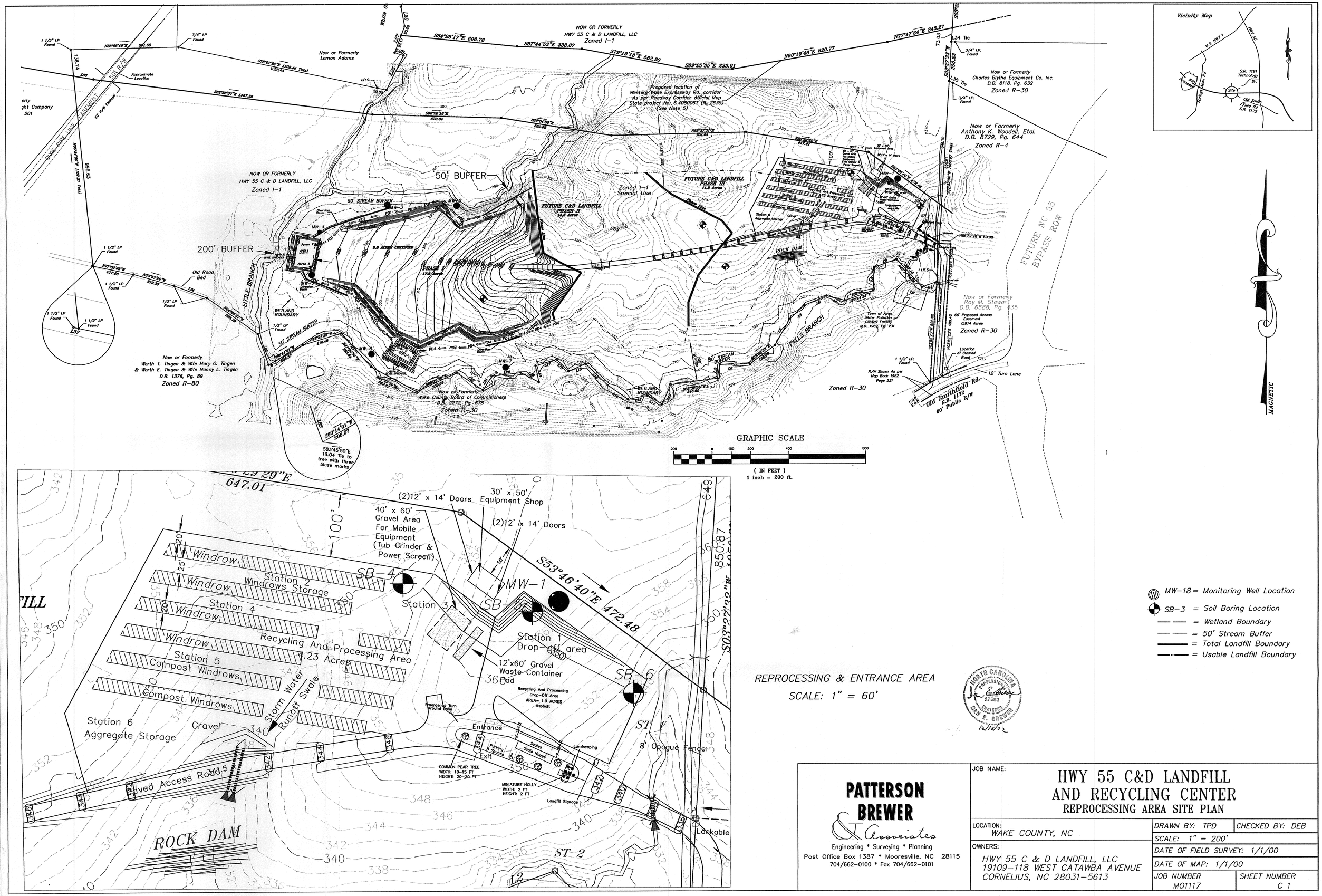
Vicinity Map
U.S. HWY 1
HWY 55
S.R. 1191 Technology Dr.
Old Smith Field Rd S.R. 1172
Site
NOW OR FORMERLY
HWY 55 C & D LANDFILL, LLC
Zoned I-1
Now or Formerly
Lamon Adams
Proposed location of
Western Wake Expressway Rd. corridor
As per Roadway Corridor Official Map
State project No. 6.4080061 (R-2635)
(See Note 5)
Now or Formerly
Charles Blythe Equipment Co. Inc.
D.B. 8118, Pg. 632
Zoned R-30
Now or Formerly
Anthony K. Woodell, Etal.
D.B. 8729, Pg. 644
Zoned R-4
50' BUFFER
200' BUFFER
50' STREAM BUFFER
FUTURE C&D LANDFILL PHASE II
FUTURE C&D LANDFILL PHASE III
Zoned I-1 Special Use
ROCK DAM
FUTURE NC 55 BYPASS ROW
Now or Formerly
Roy M. Stewart
D.B. 6588, Pg. 235
Zoned R-30
Now or Formerly
Worth T. Tingen & Wife Mary G. Tingen
& Worth E. Tingen & Wife Nancy L. Tingen
D.B. 1376, Pg. 89
Zoned R-80
Now or Formerly
Wake County Board of Commisioners
D.B. 2277, Pg. 678
Zoned R-30
Old Smithfield Rd.
S.R. 1172
60' Public R/W
12' Turn Lane
WETLAND BOUNDARY
LITTLE BRANCH
FALLS BRANCH
Old Road Bed
Town of Apex Water Pollution Control Facility
M.B. 1982, Pg. 231
R/W Shown As per Map Book 1982 Page 231
Location of Cleared Road
GRAPHIC SCALE
(IN FEET)
1 inch = 200 ft.
MAGNETIC
647.01
(2)12' x 14' Doors
30' x 50' Equipment Shop
40' x 60' Gravel Area For Mobile Equipment (Tub Grinder & Power Screen)
S53°46'40"E 472.48
Windrow
Station 2 Windrows Storage
Station 4
Recycling And Processing Area 4.23 Acres
Station 5 Compost Windrows
Station 6 Aggregate Storage
Gravel
Storm Water Runoff Swale
Station 3
Station 1 Drop-off area
12'x60' Gravel Waste Container Pad
Recycling And Processing Drop-Off Area AREA= 1.0 ACRES Asphalt
Emergency Turn Around Zone
Entrance
Exit
Parking & Signage
Scales
Scale House
Landscaping
COMMON PEAR TREE WIDTH: 10-15 FT HEIGHT: 20-30 FT
MINIATURE HOLLY WIDTH: 2 FT HEIGHT: 2 FT
Landfill Signage
8' Opaque Fence
Lockable
Paved Access Road
ROCK DAM
ST 1
ST 2
MW-18 = Monitoring Well Location
SB-3 = Soil Boring Location
= Wetland Boundary
= 50' Stream Buffer
= Total Landfill Boundary
= Usable Landfill Boundary
REPROCESSING & ENTRANCE AREA
SCALE: 1" = 60'
NORTH CAROLINA PROFESSIONAL ENGINEER SEAL 17862 DAN E. BREWER
12/16/02
PATTERSON BREWER & Associates
Engineering * Surveying * Planning
Post Office Box 1387 * Mooresville, NC 28115
704/662-0100 * Fax 704/662-0101
JOB NAME:
HWY 55 C&D LANDFILL AND RECYCLING CENTER
REPROCESSING AREA SITE PLAN
LOCATION: WAKE COUNTY, NC
OWNERS: HWY 55 C & D LANDFILL, LLC 19109-118 WEST CATAWBA AVENUE CORNELIUS, NC 28031-5613
DRAWN BY: TPD
CHECKED BY: DEB
SCALE: 1" = 200'
DATE OF FIELD SURVEY: 1/1/00
DATE OF MAP: 1/1/00
JOB NUMBER M01117
SHEET NUMBER C 1

Proposed Hwy 55 C & D Landfill and Recycling Center
1/4 Mile Radius Survey Map

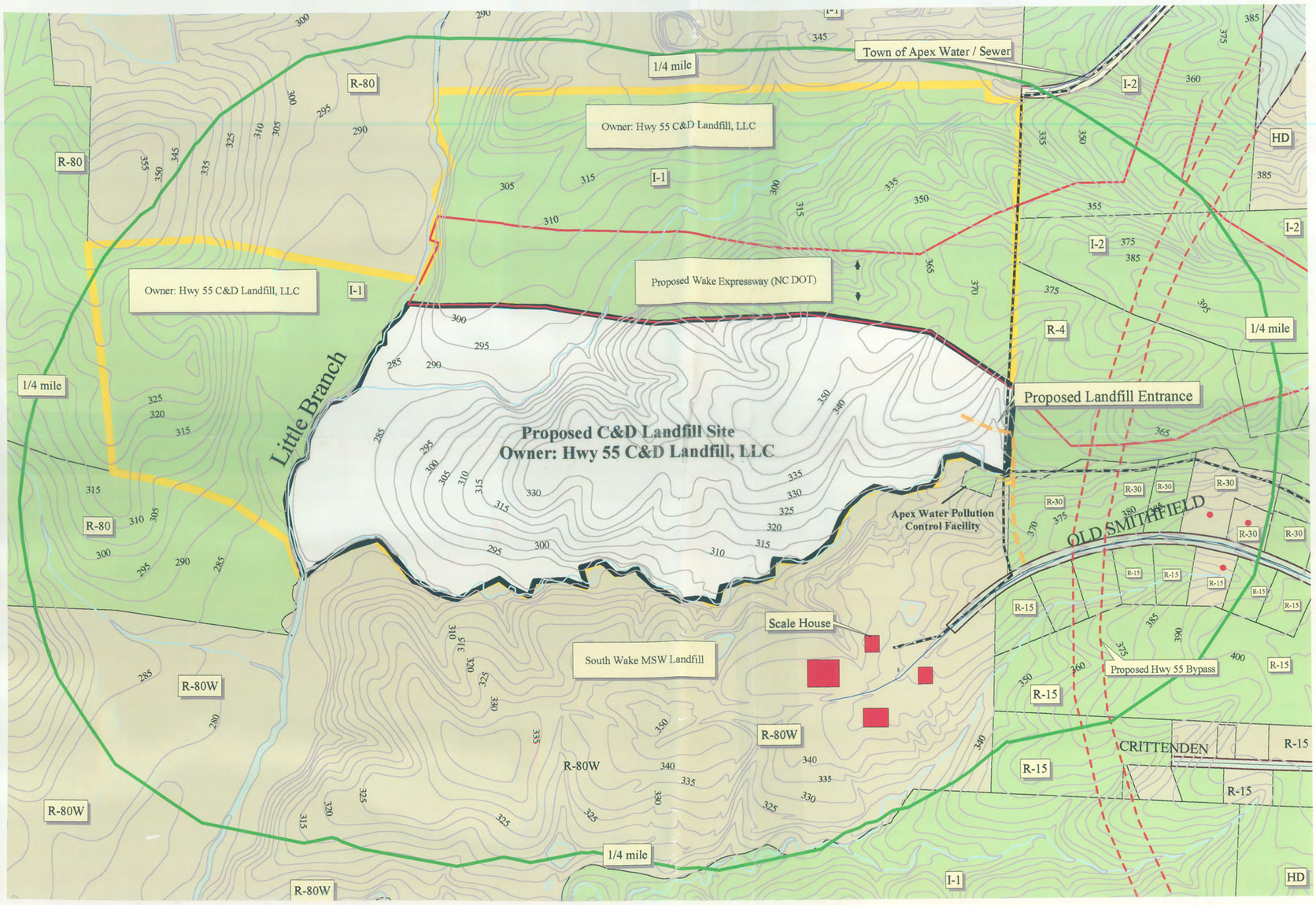

Map Legend

Apex / Holly Springs Utilities
- Sewer
- Water
- Hydrology
- Topo
- Proposed Expressway Corridor
- Proposed Hwy 55 Bypass
- Houses
- Buildings
- Developed Parcels
- Undeveloped Parcels
- Tax Parcel Boundaries
- Proposed C&D Landfill Site
- Hwy 55 C&D Landfill, LLC owned land

Zoning Codes

R80 & R-80W(critical watershed) - 50 du/acre
R-40 & R-40W(critical watershed) - 1 du/acre
R-30 - 1.45 du/acre
R-20 - 2.17 du/acre
R-15 - 2.90 du/acre
R-10 - 4.35 du/acre
R-5 - 8.7 du/acre
HD - Highway District (1.45 du/acre)
OI - Office & Institutional
GB - General Business District
HC - Heavy Commercial District
I1 - Industrial District
I2 - Industrial District 2
RA - Research Applications District

Note: No Schools, Airports, or private drinking wells within a 1/4 mile radius of proposed landfill site.

Wake County does not distribute FEMA 100yr Floodplain data in a GIS format to the public.

N

0 400 Feet

Map Scale 1 : 4800
1 inch = 400 feet

Figure 4

Proposed Hwy 55 C & D Landfill and Recycling Center
1/4 Mile Radius Aerial Photograph

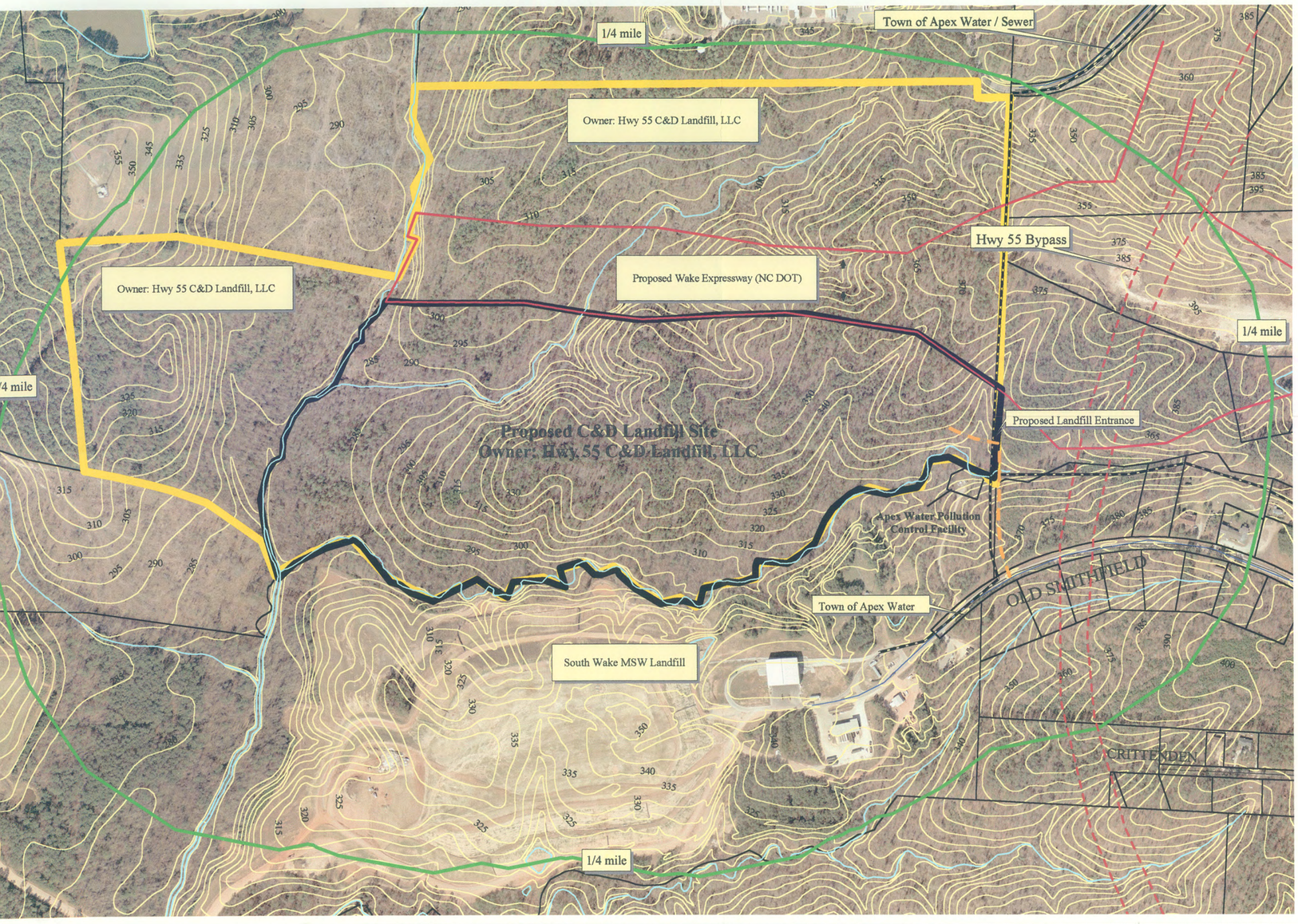

Map Legend

Apex / Holly Springs Utilities
- Sewer
- Water
- Hydrology
- Topo
- Proposed Expressway Corridor
- Proposed Hwy 55 Bypass
- Tax Parcel Boundaries
- Proposed C&D Landfill Site
- Hwy 55 C&D Landfill, LLC owned land

Note: No Schools, Airports, or private drinking wells within a 1/4 mile radius of proposed landfill site.

Wake County does not distribute FEMA 100yr Floodplain data in a GIS format to the public.

N

0 400 Feet

Map Scale 1 : 4800
1 inch = 400 feet

Figure 3