DIN 19436 86-02 & 86-06 Rec.5/2/2013

# SURRY COUNTY
# MOUNT AIRY LANDFILL
## (SOLID WASTE PERMIT #86-06)

# LFG COLLECTION AND CONTROL SYSTEM OPERATION PLAN

## MAY 2013

*Prepared for:*

**Surry County,**
**North Carolina**

**Surry County**
**118 Hamby Road**
**Dobson, NC 27030**

*Prepared by:*


CHA
8720 Red Oak Boulevard, Suite 505
Charlotte, North Carolina 28217
N.C. License No. F-1165


**Project Number 22177**

NORTH CAROLINA PROFESSIONAL SEAL 20390 ENGINEER ROBERT C. SALLACH
5/1/13

# TABLE OF CONTENTS

**SECTION** **PAGE**


**1.0 INTRODUCTION ..... 1**
1.1 Purpose ..... 1
1.1.1 Regulatory Requirements ..... 1
1.2 System Summary ..... 1
1.3 Operational Responsibility and Facility Contacts ..... 2
1.4 LFG Basics ..... 2
1.4.1 LFG Generation ..... 2
1.4.2 LFG Generation Variables ..... 3
1.4.3 Physical and Chemical Characteristics ..... 3
**2.0 LFG SYSTEM EQUIPMENT AND PARTS ..... 3**
2.1 Equipment ..... 3
2.2 Spare Parts ..... 4
**3.0 LFG COLLECTION SYSTEM ..... 5**
3.1 Vertical LFG Extraction Wells ..... 5
3.1.1 Vertical LFG Extraction Wells ..... 6
3.2 Wellhead Monitoring Assemblies ..... 6
3.3 LFG Header Pipes and Transmission Line ..... 6
**4.0 GENERATOR AND BLOWER STATION ..... 7**
4.1 Blower Skid ..... 7
4.1.1 Condensate Knock-Out Pot ..... 7
4.1.2 Generator Inlet Control ..... 8
4.1.3 LFG Blower ..... 8
4.1.4 Generator ..... 8
4.1.5 Air Compressor ..... 9
4.1.6 Blower Controls ..... 9
4.1.6.1 Auto Alarm ..... 9
4.1.6.2 System Shut-Down on Power Failure ..... 9
4.1.6.3 LFG Flow Meter ..... 10
4.1.6.4 Blower Flow Control and Vacuum Control ..... 10
4.1.6.5 LFG Digital Chart Recorder ..... 10
4.1.6.6 LFG Inlet Header Pressure Transmitter ..... 10
**5.0 CONDENSATE MANAGEMENT SYSTEM ..... 10**
5.1 Condensate Knock-Out Pot ..... 11
5.2 Condensate Sumps ..... 11
5.3 Condensate Pump ..... 11
5.4 Pump Controllers ..... 11
**6.0 LFG BLOWER SYSTEM OPERATING PROCEDURES ..... 12**
6.1 Modes of Operation ..... 12
6.2 Prestart-Up ..... 12
6.3 Start-Up Procedure ..... 12
6.4 Start-Up and Operation after Failure Shutdown ..... 13
**7.0 CONDENSATE MANAGEMENT SYSTEM OPERATION ..... 13**
7.1 Condensate Collection System – Initial Start-up ..... 14
7.2 Routine Condensate Collection System Operation ..... 14

# TABLE OF CONTENTS

SECTION PAGE


**8.0 LFG EXTRACTION MONITORING AND BALANCING ..... 14**
8.1 Purpose ..... 15
8.1.1 Regulatory Requirements ..... 15
8.1.1.1 New Source Performance Standards (NSPS) ..... 15
8.2 Factors Affecting Field Performance ..... 15
8.2.1 LFG Withdrawal Rate ..... 16
8.2.2 Landfill Cover ..... 16
8.2.3 Construction Activities ..... 17
8.2.4 Barometric Pressure ..... 17
8.2.5 Weather ..... 17
8.2.6 Settlement ..... 18
8.2.7 Refuse Moisture ..... 18
8.3 Monitoring Parameters ..... 18
8.3.1 Pressure ..... 18
8.3.2 LFG Composition ..... 19
8.4 LFG Extraction Monitoring Procedures ..... 19
8.5 LFG Well Adjustment ..... 20
8.5.1 Minimizing LFG Over-Extraction ..... 21
8.6 Instrumentation ..... 22
8.7 Frequency ..... 22
8.8 GCCS Operating Requirements ..... 22
8.9 Basic Landfill Health and Safety ..... 22
8.10 Sub-Surface Refuse Fires ..... 23
8.11 Records and Recordkeeping ..... 24
**9.0 MAINTENANCE ..... 24**
9.1 Purpose ..... 24
9.2 LFG Collection System ..... 24
9.2.1 General Inspection ..... 25
9.2.2 Routine Preventive Maintenance ..... 25
9.3 Blower Station ..... 26
9.3.1 Blower Station Knock-Out Pot ..... 26
9.3.2 Pneumatic Blower Recirculation Valve ..... 26
9.3.3 Blower ..... 26
9.3.4 Instrumentation ..... 27
9.4 Condensate Collection System Operation ..... 27
9.4.1 LFG Transmission Pipe Condensate Collection System ..... 27
9.4.2 Condensate Pumps ..... 27
9.5 Maintenance Records ..... 27
**10.0 TROUBLESHOOTING ..... 28**
10.1 LFG Collection System ..... 28
10.2 Blower Station ..... 29
10.3 LFG Transmission Pipeline ..... 30
10.4 Condensate Collection System ..... 30

## TABLE OF CONTENTS

**SECTION** **PAGE**

APPENDIX A – GLOSSARY OF LFG TERMS

APPENDIX B – DRAWINGS (Record Drawings will be provided upon final completion)

APPENDIX C – MONITORING FORMS

APPENDIX D – AIR PERMIT

# 1.0 INTRODUCTION

This operations manual is the primary reference intended for use by Surry County and Barnabas LLC (gas collection control operator) as a source of information for managing operation of the landfill gas (LFG) gas collection and control system (GCCS) at Surry County's Mount Airy Landfill. This manual contains pertinent data about the physical systems, its operation, limitations, monitoring, recordkeeping, emergency responses, and recommended maintenance.

This manual is one component of the operations and maintenance (O&M) resource information available for the GCCS. The record drawings, the specifications, and the equipment manufacturer's O&M manual(s) should also be thoroughly consulted. A glossary of LFG terms is provided in Appendix A. No work of any kind should be attempted without having read the information contained in these documents. In addition, hands-on training may also be necessary before operating or maintaining the referenced GCCS equipment.

## 1.1 Purpose

The primary purpose of the GCCS at the Mount Airy Landfill is to recover LFG for renewal energy generation and to protect the environment and public health from the hazards of LFG and condensate, in compliance with applicable regulations. The installation and operation of the GCCS is in accordance with the North Carolina Department of Environmental and Natural Resources (NCDENR), Division of Air Quality (DAQ), Air Quality Rules, 15A NCAC 2D and 2Q; Division of Waste Management (DWM), Solid Waste Management Rules, 15A NCAC 13B; and in accordance with the New Source Performance Standards (NSPS) requirements per 40 Code of Federal Regulations (CFR) Part 60.1 through 60.18, 40 CFR 60.750 through 60.759, and 40 CFR 63.1930 through 63.1990.

### 1.1.1 Regulatory Requirements

The current regulations governing the operation of landfills and LFG systems require the following:

- Control of sub-surface LFG migration off-site.
- Control of LFG accumulation in facilities and structures.
- Control of landfill surface LFG emissions and leaks.
- Control of LFG collection and conveyance system leaks.
- Efficient control of the collected LFG.

## 1.2 System Summary

The Mount Airy Landfill GCCS consists of three major components:

- The LFG collection (well field) and transmission system.
- Extraction blower.

- The condensate management system.

## 1.3 Operational Responsibility and Facility Contacts

The GCCS operator has responsibility for the following tasks:

- Operation and monitoring of the well field.
- Operation and monitoring of the blower station.
- Operation and monitoring of the condensate management system.
- Review of compliance data.
- Preparation of required monitoring reports for the GCCS.
- O&M of the GCCS in accordance with manufacturer's recommendations permit conditions and applicable regulations.

The primary contacts for this facility are:

Wayne Marshall
Petra Engineering
PO Box 659
Huntersville, NC 28070
(704) 987-1406
wmarshall@petraeng.com

Dennis Bledsoe, Director
Surry County Public Works Department
PO Box 342
Dobson, NC 27017
(910) 401-8376
bledsoed@co.surry.nc.us

## 1.4 LFG Basics

The following section provides the reader with a general overview of LFG, how it is generated, and its physical and chemical characteristics.

### 1.4.1 LFG Generation

Typical LFG is generated when refuse decomposes in anaerobic (without oxygen) conditions. During anaerobic decomposition, complex organic wastes are broken down into simple molecules, such as methane and carbon dioxide, by microorganisms. Only wastes containing readily decomposable organic material (such as food wastes, yard wastes, paper, wood wastes, etc.) can supply the medium, or substrate, for the microorganisms. Inorganic materials (such as metal, rock, and glass) cannot be biodegraded.

In early stages of degradation, prior to full oxygen depletion and cooling of the high temperature generating aerobic (with oxygen) degradation, refuse is degraded and hydrogen and carbon dioxide are generated. With depletion of oxygen and cooling of the landfill, the microorganisms that generate the hydrogen and carbon dioxide yield to those that generate methane and carbon dioxide.

### 1.4.2 LFG Generation Variables

Many variables strongly influence the generation of LFG, the most significant being control of air intrusion into the landfill, refuse moisture content, and temperature. Air intrusion is controlled by sealing avenues of intrusion by engineered controls and an adequate landfill cover where air could enter the refuse mass. Moisture content may vary widely throughout the interior of a landfill, ranging from an average of 25 percent to completely saturated zones of 40 to 50 percent moisture by weight. High moisture content and temperatures up to 130 degrees Fahrenheit (°F) typically encourage increased LFG generation. Other important variables include refuse placement methods, degree of compaction, refuse composition, and internal and external temperatures.

### 1.4.3 Physical and Chemical Characteristics

Methane and carbon dioxide, the principal components of undiluted LFG, are present in approximately equal portions. If carbon dioxide migrates off site, it may affect groundwater quality and surface vegetation; but impacts to human health and safety are negligible. Methane, like carbon dioxide, is non-toxic to humans. However, it is a combustible gas when present between 5 and 15 percent by volume in air. Both carbon dioxide and methane are classified as simple asphyxiants as they can displace oxygen in a confined space.

In addition to methane and carbon dioxide, LFG may contain numerous trace gaseous constituents, depending on refuse composition. Some constituents may be toxic and may constitute health hazards even in trace amounts. Extracted LFG is usually fully saturated with moisture (i.e., the relative humidity within the gas collection pipe is 100 percent). LFG temperatures inside a landfill can range from ambient to 140°F, depending on refuse depth and the rate of biological activity. As the gas cools after extraction, the saturated moisture will condense on the inner walls of the gas collection pipes, forming a liquid known as LFG condensate.

Condensate is composed primarily (greater than 95 percent) of water. Trace amounts of particulate and soluble compounds can also be present. Landfill condensate is usually distinguishable from landfill leachate in composition and appearance. Condensate is fairly clear and usually has few dissolved inorganics, whereas leachate usually has significant concentrations of dissolved inorganics and is often brown or black in color.

# 2.0 LFG SYSTEM EQUIPMENT AND PARTS

## 2.1 Equipment

The following tables list the equipment components of the blower skid and the condensate management system. The purpose of these equipment lists is to provide a quick reference to the manufacturer or responsible sales representative. In the case of equipment failure, please refer to the manufacturer's operating and troubleshooting instructions for details. These equipment lists should be used as a supplement to the manufacturer-provided O&M manuals.

**TABLE 2-1**
**LFGS Utility Blower and Skid Equipment List**

| Equipment Description | Manufacturer and Model Number | Contact Phone No. |
|---|---|---|
| Blower Skid | Glauber | 704-650-8415 |
| Blower | Roots 59 URAI-G | 877-393-7668 |
| Pressure Indicators | Ashcroft Type 1259 | 336-776-1885 |
| Temperature Indicator | Ashcroft EI | 336-776-1885 |
| KNOCKOUT TANK | | |
| Maintenance Procedures | | 704-650-8415 |
| Knockout Tank Drawing | Glauber 1087108-301 | 704-650-8415 |
| Hand Valves | ABZ 919 | 704-650-8415 |
| Level Switch | Rosemount 2120 | 704-650-8415 |
| ELECTRICAL | | |
| Control Panel Enclosure | Saginaw<br>Enclosure CSD363016<br>Back panel CP3630<br>Enclosure MTG Feet C-MFk<br>Pad Lockable Handle CWHPTO | 704-650-8415 |
| Disconnect Switch | ABB OT 12SF | 704-650-8415 |
| Circuit Breakers | ABB 0530FAJ12 | 704-650-8415 |
| DC Power Supply | Cutler Hammer PSS55A | 704-650-8415 |
| Step-Down Transformer | Cutler Hammer S20N11S03N | 704-650-8415 |
| VFDs | ABB ACH 55 | 704-650-8415 |
| Panel Lights/ Pushbuttons/Switches | ABB MP1; ABB MLT-100 | 704-650-8415 |
| Panel Heaters | PFANNENBERG | 704-650-8415 |

**TABLE 2-2**
**Condensate Management Equipment List**

| Equipment Description | Manufacturer and Model Number | Contact Phone No. |
|---|---|---|
| Condensate System | | |
| Sump Pump | QED AP-4+ Short Stroke | |
| Check valves | Flexi-Hinge 518-4310 | |
| Quick disconnect coupler | Stainless Steel Pitless Adapters #5-20 | |
| Air Compressor | Jenny-Marathon HVE 145TTFR4027AEP | |

## 2.2 Spare Parts

To minimize long-duration system shutdowns and optimize performance, an adequate supply of spare parts should be maintained. Each manufacturer's instructional literature typically contains standard recommended spare parts and supplies for various pieces of major equipment. The following table lists recommended spare parts for the GCCS and blower station.

**TABLE 2-3**
**LFG Collection System Spare Parts List**

| Item | Quantity* | Type |
|---|---|---|
| HDPE SDR-17 | 40 FT | 6-inch |
| HDPE SDR-17 | 40 FT | 4-inch |
| HDPE Flange Sets, w/gasket and hardware | 2 | 6-inch |
| HDPE Blind Flanges, w/gasket | 4 | 6-inch and 4-inch |
| PVC Labcock Valves | 12 | 1/4 inch |
| Condensate Pump | 1 | QED AP-4 Short |
| LFG Well Head | 2 | 2-inch Landfill Gas Specialties |
| SS Hose Clamps | 6 | 2-inch, 4-inch, 6-inch |
| Flexible Hose | 20 FT | 2-inch Kanaflex |
| Pressure Gauge/Blower Skid | 1 | |
| Temperature Gauge/Blower Skid | 1 | |
| Vacuum Gauge/Blower Skid | 1 | LFGS PFG100-0H2OV |
| Air Regulator | 1 | For pneumatic condensate pumps |
| Blower Bearing Grease | 1 case | Roots blower |
| *Recommended minimum quantities to keep on hand. | | |

# 3.0 LFG COLLECTION SYSTEM

This section describes the LFG collection system at the Mount Airy Landfill. The purpose of the collection system is to extract sufficient flow of acceptable quality LFG from all areas of the landfill and to maintain environmental compliance for renewable energy generation. The system includes all LFG conveyance components installed in the landfill – from the LFG extraction wells to the inlet of the condensate knock-out pot (KOP) on the blower skid. These components include the following:

- Vertical LFG extraction wells.
- Leachate cleanout extraction assemblies.
- Wellhead monitoring assemblies.
- LFG lateral piping connecting wells to header piping.
- Header piping and transmission line.
- Header isolation valves.
- Main header inlet shut-off valve.

A vacuum applied to the extraction well field by a blower causes LFG to move from the refuse into the gas extraction wells, through the wellhead monitoring assembly and LFG lateral piping, and finally into LFG main header pipes.

## 3.1 Vertical LFG Extraction Wells

The LFG extraction well field currently includes 20 vertical LFG extraction wells and 5 connections to the primary leachate collection system. The vertical LFG wells were installed at approximately

200-foot spacing across the top deck of the Phase 1 Subtitle D Municipal Solid Waste Landfill (MSWLF) unit (new) and the closed pre-1998 MSWLF unit (old). Refer to record drawings in Appendix B for well locations and installation data.

### 3.1.1 Vertical LFG Extraction Wells

A typical LFG extraction well consists of a lower (perforated) and upper casing (solid) of 6-inch polyvinyl chloride (PVC) pipe. The perforated pipe has 1/8- to 1/2-inch perforations in four rows, 90 degrees apart on the pipe circumference, and spaced 4 inches center to center.

The lower casing of the vertical extraction well is surrounded by 1- to 3-inch diameter, rounded stone or gravel to a minimum of 1 foot above the perforated casing. A minimum 2-foot-thick layer of hydrated bentonite is placed above the gravel backfill, followed by on-site soil to within 3 feet of the surface grade. The remaining depth of the well borehole is filled with an additional 2-foot-thick layer bentonite and 1-foot-thick layer of cover soil to the top of the existing cover.

Future LFG extraction wells will be installed as required to increase LFG collection efficiency and to maintain regulatory compliance.

## 3.2 Wellhead Monitoring Assemblies

Each vertical well casing is fitted with a 2-inch wellhead monitoring assembly connected to a 6-inch diameter, high density polyethylene (HDPE) vacuum riser pipe that conveys LFG to the main header pipe (see drawings in Appendix B for pipe sizes and layout). Each wellhead monitoring assembly includes a 2-inch PVC gate valve for LFG flow control, multiple hose barbs and/or “quick-connect” fittings for LFG monitoring, and a flexible hose connection to the 4-inch HDPE lateral. The quick-connect or hose barb fittings enable connection of monitoring instruments for measurement of LFG composition, temperature, flow, static pressure, impact pressure, and system pressure. Pitot tubes internal to the LFG Specialty’s wellheads are used to measure differential pressure within the wellhead and to calculate flow at each wellhead.

The flexible hose connection to the HDPE lateral isolates the well and monitoring assembly from forces exerted by the lateral pipe, and allows a limited amount of differential movement to occur.

## 3.3 LFG Header Pipes and Transmission Line

The LFG HDPE main header pipe forms a loop system to collect the gas from the well laterals and convey it to the utility blower station. Manually operated butterfly valves are installed on various LFG lateral piping runs to allow for entire sections of the well field to be isolated as necessary.

A shut-off butterfly valve is also installed at the termination of the LFG main header at the inlet to the transmission line for total system shut-down. A combination labcock and/or access port is provided near each butterfly valve, to allow monitoring of header vacuum and LFG parameters. Refer to drawings (Appendix B) for the location of the header pipes and transmission line.

# 4.0 GENERATOR AND BLOWER STATION

The LFG control device consists of a Caterpillar GC3520 engine generator located adjacent to the old landfill near the County's existing maintenance building. The generator is permitted for operation to generate electricity and maintain LFG emissions control within regulatory compliance through destruction of the LFG by thermal combustion. Refer to air permit in Appendix D. The generator has its own comprehensive O&M Manual and operating procedures, which are not repeated within this GCCS O&M manual for brevity. The following focuses on the blower station, which includes the following major components:

- Prefabricated blower skid including:
  - Condensate KOP.
  - Suction blowers.
  - Blower control and monitoring instrumentation.
- Compressed air supply including:
  - Condensate trap.
  - Desiccant dryer.
  - Coalescing and particulate filters.
  - Reciprocating air compressor.

Each of the major blower skid components is described in the following sections.

## 4.1 Blower Skid

A detailed list of equipment and components is provided in Table 2-1. For detailed operational procedures, consult the Blower Operations Manual, which is incorporated by reference. The major components are described below, according to sequence in the LFG process flow.

### 4.1.1 Condensate Knock-Out Pot

The purpose of the condensate KOP is to remove excessive moisture and large particles from the LFG flow stream, which might otherwise impact the blower, other sensitive components on the blower skid, or the generator. The KOP consists of a stainless steel vessel that provides a directional change and a decrease in LFG velocity, in addition to a stainless steel demister pad with approximately 10-micron filtration capability. A 1-inch diameter liquid drain is provided at the bottom of the KOP and is connected to the blower station condensate sump via 1-inch HDPE gravity drain line. The KOP has a level switch to allow indication of high condensate level in the KOP. The KOP drain line is heat-traced to prevent freezing of liquid in cold temperatures.

### 4.1.2 Generator Inlet Control

The purpose of the generator inlet control valve on the gas train is to provide pressure regulated LFG flow to the generator and to provide fail-safe shutdown of LFG flow to the generator during shutdown or alarm conditions programmed into the generator controls. Under most conditions, the inlet valve will remain open when generator and blower operation permissives are energized. The blower is equipped with an automated recirculation loop to maintain gas flow and provide unit start-up and shut-down control.

The generator features Caterpillar's Total Electronic Management (TEM) control system. This flexible control system is designed to optimize the performance of the generator set while being powerful enough to control generator performance and operation of the blower skid. The system can be adjusted to specific project conditions and requirements. This single master control operates many accessories, such as the fuel monitoring systems, blower, and downstream electrical distribution systems from a single, common touchscreen interface. The TEM system has a wide range of remote access options, allowing user control from a single touchscreen panel in the control room or internet-connected personal computer.

### 4.1.3 LFG Blower

The blower skid includes one LFG blower and provisions for a future backup to supply LFG to the generator. The purpose of the LFG blowers is to provide the vacuum and pressure required to extract the LFG from the landfill and convey it to the generator. The LFG blower is Roots, model number 69-U-RAI, directly coupled to a 30 horsepower (hp) motor with VFD drive. The blower has a maximum capacity of 500 standard cubic feet per minute (scfm) LFG with 40 inches of water column (w.c.) vacuum and 5 psig discharge pressure. A check valve and a manual butterfly valve are located at the blower discharge line and outlets for LFG isolation. LFG flow rate and pressure are controlled by the generator inlet pressure control valve and blower recirculation loop.

The blowers' power supply and PLC controls are located in the blower motor control center mounted on a rack assembly in the control building.

### 4.1.4 Generator

The generator is a Caterpillar GC3520 series engineered for efficiency and reliability and includes a 20-cylinder configuration that delivers electrical outputs ranging from 1000 to 1600 kWe. This unit is specifically designed to operate on low Btu biogas fuels like landfill gas. The small footprint and high power output make it ideal as a containerized power plant. The air-fuel mixture inlet section and the pre-chamber spark plugs have been optimized – improving combustion and increasing engine efficiency. The proprietary exhaust system is designed to reduce pollutant emissions. As previously noted, the generator has its own comprehensive O&M Manual and operating procedures, which are not repeated within this GCCS O&M Manual for brevity.

### 4.1.5 Air Compressor

The air compressor is a Jenny-Marathon HVE rated for 7.5 scfm with a 2 hp motor. Its purpose is to provide the pressure needed to control the pneumatic valve on the blower recirculation loop and to supply air to the pneumatic condensate pump stations. In the event of a power outage or system malfunction, the air compressor will shut down and cease to provide pressure until the issue has been resolved. Upon power restoration, the compressor will automatically restart.

The air compressor includes an air drying system for air supplied to the pneumatic control value on the blower recirculation loop.

### 4.1.6 Blower Controls

The blower can be operated in either manual or an automatic pressure controlled mode when the generator is in operation. The blower should only be operated in manual mode for short periods and only when trained personnel are in attendance. In automatic mode, the following controls are activated and provide redundant safeguards.

#### 4.1.6.1 Auto Alarm

An automatic alarm function within the blower PLC system will generate and email notification of system failures and warning alarms to designated remote addresses. This PLC alarm will send up to three email addresses to report a generator shut-down condition, and will indicate the reason for the shutdown.

The auto-alarm will be programmed to contact GCCS operator personnel and is programmed with the following channels:

- Generator shutdown .
- High KOP level.
- High blower bearing temperature.
- After cooler over pressurization.
- Air compressor low pressure.
- Blower fail.
- High oxygen concentration.

The blower will normally be operated and controlled from an integrated PLC-based-control system interconnected to the generator ISO and control system. This system is web based for remote control and monitoring of the blower and generator by GCCS operations' personal.

#### 4.1.6.2 System Shut-Down on Power Failure

In the event of an electrical power failure, the blower operations will cease; and the generator pressure control valve will close to prevent a point source discharge of LFG. Upon the

restoration of electrical power, the blower will be manually restarted in conjunction with the generator start-up procedures.

#### 4.1.6.3 LFG Flow Meter

An LFG flow meter is installed in the blower discharge line that feeds the generator gas train to allow LFG flow measurement, indication, totalizing, and recording. The flow meter output is integrated over time, and both continuous flow rate and total flow are recorded by the blower PLC located in the control building.

#### 4.1.6.4 Blower Flow Control and Vacuum Control

The blower operations can be set to control the flow rate of LFG extracted from the various MSWLF units or to control the overall collection system vacuum. In either operating condition, the flow can be limited to a programmed set point to ensure that prescribed limits are not exceeded. PLC-based continuous monitoring and control enables blower and generator operations to be controlled in a "integrated pressure/maximum flow rate" mode, where the LFG extraction flow rate from the landfill to the generator and the maximum vacuum on the collection system are automatically controlled (limited) by manually input blower speed and LFG flow rate set points functions.

#### 4.1.6.5 LFG Digital Chart Recorder

A Yokogawa DX1012 digital continuous chart recorder is installed at the control panel for monitoring a variety of parameters including but not limited to:

- Methane concentration.
- Oxygen concentration.
- Carbon dioxide concentration.
- LFG flow rate to the generator.
- Blower inlet vacuum.

#### 4.1.6.6 LFG Inlet Header Pressure Transmitter

A pressure transmitter is located on the inlet to the KOP to monitor the vacuum applied to the well field. Additionally, this pressure or vacuum reading is monitored by the blower PLC, which enables the blower operations to be put into "vacuum control," which will maintain a constant vacuum on the well field. This setting is particularly useful while balancing and tuning the well field and making adjustments to individual wells.

# 5.0 CONDENSATE MANAGEMENT SYSTEM

The purpose of the condensate management system is to minimize LFG flow obstructions by capturing and removing all free liquid from the LFG flow stream for disposal. The condensate collection system for the LFG system includes the following components:

- A KOP located prior to the inlet of the blowers.
- Four on-site condensate sumps and one extraction well with QED AP-4 short stroke pneumatic pumps.
- 2-inch diameter HDPE force main.

## 5.1 Condensate Knock-Out Pot

The purpose of the KOP is to remove condensate from the LFG prior to the LFG entering the blower and generator gas train. The KOP contains a demister pad, which promotes the condensing of liquids.

Liquid that condenses within the LFG collection pipes will drain by gravity flow to the condensate sumps at the blower station and in the transmission line prior to the KOP. A 1-inch diameter drain line is provided at the bottom of the KOP and is connected to the blower station condensate sump via 1-inch diameter HDPE gravity drain piping.

## 5.2 Condensate Sumps

The condensate management system contains four condensate sumps located at low points along the 12-inch gas transmission line to the blower station. The purpose of the sumps is to collect condensate that flows in the LFG transmission piping to the blower station prior to the KOP. The condensate sumps consists of a 12-inch diameter HDPE riser with a sealed cap at the bottom and a blind flange at the top of the riser for access to the sump and connection of the air supply and discharge hose.

The condensate enters the sump through a drip leg (12-inch tee) from the transmission line. The condensate level rises in the sump until the float mechanism internal to the QED AP-4 pneumatic pump triggers the pump to actuate and dewater the sump. Condensate is pumped from the sump through a dedicated 2-inch HDPE force main connected to an on-site LCRS riser (Clean Out #3) on the southwest slope of the Phase 1 Subtitle D landfill. See Appendix B for drawings.

## 5.3 Condensate Pump

A QED AP-4 short stroke pneumatic pump is hung at the bottom of the sump for pumping the collected condensate into the LCRS riser. The pump is made of a combination of a fiberglass body with 304 stainless steel and Teflon internal parts to withstand corrosion from the slightly acidic condensate.

## 5.4 Pump Controllers

The QED AP-4 contains an internal float, which activates air pressure to displace liquid that enters the pump. The pump is activated when the float riser mechanism engages the air pressure actuator. When the condensate level in the sump is pumped down, the float ceases to rise and the pump operations are discontinued.

# 6.0 LFG BLOWER SYSTEM OPERATING PROCEDURES

## 6.1 Modes of Operation

Under normal operating conditions, the LFG will be extracted from the landfill and conveyed to the blower via a network of LFG collection pipes and a 12-inch transmission line. Blowers at the generator site will provide a vacuum to the collection system to convey LFG to the generator for combustion.

When operating the landfill blower system, the vacuum required to extract the specified LFG flow from the landfill is adjusted by increasing or reducing the blower speed to adjust the overall vacuum applied to the collection system and then by opening or closing the gate valves at the individual wellheads in the field to adjust the vacuum applied at each extraction point (well or leachate cleanout).

The design flow rate for the blower is 500 scfm. The maximum blower pressure (inlet vacuum) available to transport the LFG flow from the well field to the blower is rated at 40 in w.c.

The following operating procedures are provided as guidelines for start-up, operation, and normal shutdown of the blower system. The procedures described below assume that all equipment and controls have been tested and adjusted, and are functioning properly.

## 6.2 Prestart-Up

Prestart up checks consist of:

1. Check the condensate drain at the base of the KOP. Inspect the KOP for any liquids present and drain if necessary.
2. Verify that compressed air is being supplied to the pneumatic valve and condensate pumping system. Verify that the air pressure on the blower recirculation control valve regulator is at least 90 psi.
3. Verify that the blower discharge pressure and maximum speed control set points are set to the desired values.
4. Verify the that the blower manual inlet isolation valve and after-cooler outlet isolation valve are open.
5. Verify that the recirculation loop manual isolation valves are open.
6. Ensure that the 8-inch blower discharge line (vertical leg) to the generator gas train is empty of condensation.

## 6.3 Start-Up Procedure

Normal blower system start-up is summarized below. For the detailed generator Start-up Procedures, consult the Caterpillar operations manual.

1. Check all circuit breakers to ensure that they are in the "on" position.
2. Set the operation mode feature in the PLC controller to "Auto" and initiate start-up with permissive signal from the generator TEM. The PLC will then automatically start the blower in a recirculation mode. The blower speed will be ramped up to meet the generator inlet gas pressure set point. As the generator is brought up to full load, the blower speed and recirculation valve setting will be automatically adjusted by the PLC to maintain a constant blower discharge pressure. The maximum blower speed set point will be pre-adjusted to prevent over pulling of the vacuum on the well field. The after cooler fans will be automatically programmed to maintain discharge gas temperature and will start based upon the temperature set point.

### 6.4 Start-Up and Operation after Failure Shutdown

If the blower system was automatically shut down for an unknown reason, the entire system should be inspected before repeating the start-up procedure to determine the reason for the shutdown.

1. Inspect the blower station equipment and piping for any obvious physical failure (i.e., leaks, pipeline breaks, etc.).
2. Check the blower controls Human-Machine Interface (HMI) screen for information about the operating status of the blower, the LFG delivery, and user operation. Typical information provided on alarm screen includes:
   - System status.
   - Faults.
   - Warnings.
   - User logon/logoff.
   - Alarm history and reasons.
   - Page navigation.
   - Set point adjustment(s).
3. Inspect the blower housing and shaft for binding or excessive looseness.
4. Investigate the possibility of power interruption if no other cause is indicated.

To prevent repeated failure alarms, repair any deficient conditions before attempting to restart the system. If none of the above appears to have caused the shutdown, contact the Caterpillar representative for troubleshooting and service associated with respect to the generator operation.

## 7.0 CONDENSATE MANAGEMENT SYSTEM OPERATION

In general, after initial start-up, the condensate collection system will be operating whenever the LFG collection system is operating, and should not require any operational modifications. Condensate will be collected in the KOP and condensate sumps, and then pumped to the LCRS riser. The following

details the steps required to initially start up the condensate collection system, followed by a general conformational checklist for routine operations.

### 7.1 Condensate Collection System – Initial Start-up

The purpose of this section is to outline the procedures for initial start-up of the components of the condensate management system:

1. Check the condensate drain valve at the base of the KOP. The condensate drain valve should be open at all times except when checking the operation of the level switch and when checking for leaks.
2. If not completed during initial startup and testing, fill the KOP to the level below the outlet suction line with clean water. With the KOP valve closed, verify that the KOP level switch shows the presence of water.
3. Trigger the level controls in the KOP. Verify that the programmed emergency call-outs are approximately made by the system auto-alarm.
4. Open the KOP drain and verify the KOP drains to the blower station sump.

### 7.2 Routine Condensate Collection System Operation

This section summarizes procedures to be used periodically to confirm proper performance of the condensate collection system.

1. Check for (and release) any condensate accumulation in the blower outlet and discharge piping to the generator.
2. Check the condensate drain valve at the base of the KOP. The condensate drain valve should be open.
3. Verify drain to condensate sump is functioning properly.
4. Inspect transmission line sump pumps to determine if they are functioning properly and discharge lines are not obstructed.

## 8.0 LFG EXTRACTION MONITORING AND BALANCING

The purpose of this section is to describe the factors, procedures, and processes proposed for the operator to successfully monitor and adjust the LFG collection system. Well field balancing is the task of adjusting the applied vacuum at the LFG extraction wells to obtain optimum LFG flow from all areas of the landfill containing the GCCS. This section also describes the physical, operational, and meteorological factors that affect LFG collection system performance and cause the need for periodic rebalancing.

The principal components of the LFG collection system that are involved in the balancing process are the vertical extraction wells, leachate clean out extraction assemblies, pitot access ports, header

isolation valves, and the LFG blower. The parameters of primary concern, and the typical tools used for measurement are:

- LFG composition → Infra-red LFG analyzer (Landtec GEM 2000 or equivalent).
- LFG pressure or vacuum → GEM 2000 or pressure gauge or digital manometer.
- LFG wellhead temperature → Thermometer or digital temperature probe on GEM 2000.
- LFG flow → GEM 2000 or thermal anemometer.

## 8.1 Purpose

The primary purpose of LFG extraction monitoring and balancing is to maximize LFG extraction, to minimize the amount of landfill surface air infiltration, and control the oxygen and nitrogen levels in the LFG (e.g., maximize the quantity and quality of gas extracted from the waste mass).

### 8.1.1 Regulatory Requirements

#### 8.1.1.1 New Source Performance Standards (NSPS)

The LFG extraction must be optimized to meet generator fuel demand and applicable regulatory requirements. The following summarizes the requirements for control of landfill emissions. The primary objective is to minimize untreated emissions of non-methane organic compounds (NMOCs) – the trace components of LFG. NMOCs are effectively destroyed by thermal combustion. At a minimum, the gas collection system shall:

- Collect LFG at a sufficient rate so as to minimize sub-surface lateral migration and surface emissions of LFG.
- Be constructed to prevent oxygen intrusion or overdraw that can cause fires or damage the collection system.

To meet these requirements, the GCCS is sized and installed to provide sufficient collection elements, transmission piping, and blowers for the estimated maximum flow rate of LFG. LFG will be collected at a sufficient rate, which, per the definition in 40 CFR 60.751, means to maintain a negative [gage] pressure vacuum at all wellheads without causing air infiltration. Application of a negative gage pressure and minimization of air infiltration will be verified by monitoring the static pressure and nitrogen or oxygen concentrations of the LFG at the extraction points.

Each extraction point will be monitored on a monthly basis in accordance with 40 CFR 60.753 (b) and (c), at a minimum. Monitoring will be performed for pressure, temperature, methane, oxygen, carbon dioxide, and balance gas.

## 8.2 Factors Affecting Field Performance

This section describes key physical, operational, and meteorological factors that may affect LFG extraction system performance.

### 8.2.1 LFG Withdrawal Rate

The rate of LFG generation varies over time within a landfill. For most MSW landfills, LFG generation peaks within several years after waste placement ends. Subsequently, LFG generation declines as the amount of decomposable organics diminishes.

The bacteria that produce LFG thrive in the oxygen-free environment found inside a landfill. These bacteria are called anaerobic bacteria. Because oxygen is toxic to anaerobic bacteria, its presence in a landfill can cause die-off of these bacteria. If LFG is withdrawn faster than it is generated, oxygen (in the form of air) could be drawn into the refuse through the landfill surface or from the surrounding soils (overdraw). If enough oxygen is introduced into the landfill, it not only will kill the anaerobic bacteria, it will encourage the proliferation of aerobic bacteria, those that thrive in the presence of oxygen. This disrupts anaerobic refuse decomposition. The presence of oxygen in the landfill may also accelerate decomposition and stabilization, as well as reducing both present and future methane production.

Refuse decomposition generates large amounts of heat. Vacuum sufficient to cause air intrusion may cause a problem as the addition of oxygen can ignite an underground landfill fire in which the refuse smolders beneath the surface. Underground fires are difficult to extinguish, can cause operational problems with the LFG collection system, and form significant surface depressions located in the area of the fire. They can also destroy extraction wells and thereby reduce the LFG generation as well as its delivery that could be used to generate power at the LFG control device.

The key to efficient operation of any LFG extraction system is to withdraw the gas from the individual wells at approximately the same rate as it is generated. An empirical and practical way to judge the amount of gas that can be extracted from an LFG extraction system is to treat each well or collector independently. The quantity and quality of LFG produced within any given landfill varies from area to area and time to time. The quantity of gas withdrawn from a particular well or collector is based on monitoring the methane and oxygen content of the extracted gas. The total available flow rate is based on the sum of the optimized amounts of gas extracted from each well.

Methane, carbon dioxide, and oxygen concentrations sufficient to maintain anaerobic conditions vary depending on the type of well or collector drawn upon. Gas composition criteria for determining well adjustments are presented in Section 8.3.

### 8.2.2 Landfill Cover

Landfill cover consists of on-site soils placed and compacted over the refuse. Erosion, cracks, or other breaches of the landfill cover system may have a significant impact on the gas extraction system operation. A sudden breach in the cover system can cause oxygen to be drawn into the refuse. On a minor scale, this reduces gas efficiency from the well(s) or collector(s) adjacent to the breach. Any such breach may be detected by a sudden decrease in the methane concentration or increase in the oxygen or nitrogen content as the gas being

drawn from the well or collector. On a major scale, an underground refuse fire could begin, and well casings could melt and be rendered non- or only partially functional.

It is extremely important, therefore, to consider the potential consequences of any activities that may compromise the integrity of the landfill cover and allow air to be drawn into the landfill. Managers and operators should review any proposed landfill cover modifications to assess the potential impacts. The cover should be inspected regularly for evidence of erosion, slippage, significant differential settlement, cracking, or other breaches allowing air to be drawn into the refuse. Operators should also note changes in the gas composition of wells or collectors that may indicate a breach in the landfill cover.

### 8.2.3 Construction Activities

Damage to system components during landfill operations could impact performance. This is most likely to occur during construction activity by contractors unfamiliar with LFG extraction system, particularly its underground components. GCCS managers or operators should attend preconstruction meetings to brief contractors whenever necessary.

### 8.2.4 Barometric Pressure

High barometric pressure (30 inches of mercury and above) tends to temporarily increase the quality (methane content), and sometimes the quantity, of LFG drawn by the collection system. Since migration control is generally more critical in the deeper regions of the landfill, and oxygen intrusion is undesirable, a balanced collection system usually has minimal gas extraction influence immediately beneath the landfill surface. The small quantities of gas from this area generally vent through the surface and disperse undetected into the atmosphere. When the barometric pressure is high, the heavier atmosphere exerts pressure on the ground, restricting natural LFG venting through the landfill surface. More gas becomes available for extraction than the current extraction rate. A slight increase in quantity and quality of LFG is sometimes noticed. However, there is also the potential for greater LFG migration through the soils under these conditions.

Low barometric pressure reduces the pressure exerted on the ground, enabling LFG to move more freely from the landfill and increasing the potential for gas escape by surface emission.

A slight natural diurnal decrease in barometric pressure typically occurs daily between morning and afternoon hours. This generally has minimal impact on the system other than a minute change in methane quality.

### 8.2.5 Weather

Besides barometric pressure, other weather phenomena can affect the gas extraction system performance. Rainfall runoff can greatly reduce the soil permeability at the edges of the landfill. Snow and ice can seal the soils in the same manner as can large amounts of surface water. This reduced soil permeability has the same effect on the surface venting of the gas as

changes in barometric pressure. Based on site-specific conditions, failure to compensate for this condition may increase gas volumes and pressure in these particular locations.

Periods of warm, dry weather can dry out the surrounding soils at the perimeter of the landfill. Resulting higher permeability of surface cracks may allow air (oxygen) intrusion into the landfill, or more rapid leakage of LFG resulting in lower gas collection efficiency.

### 8.2.6 Settlement

Landfill settlement may be attributed to biological decomposition of organic materials, collapse of hollow objects, or compression due to overburden. Major long-term settlement may cause low points in the piping that accumulate condensate, ultimately restricting of blocking the flow of gas. Settlement problems may be visible during routine inspections of aboveground connections, or may show up in monitoring data as increased oxygen in the gas, indicating a possible break in a well or pipe, or reduced or fluctuating flow due to condensate accumulation or blockage.

### 8.2.7 Refuse Moisture

Refuse moisture content is one of the most important variables influencing LFG production. Generally, refuse with higher moisture content generates more LFG. For this reason, gas flow rates from wells or collectors may differ significantly from area to area in the same landfill.

## 8.3 Monitoring Parameters

### 8.3.1 Pressure

Pressure in an LFG pipe is measured to indicate the magnitude of the driving force available to move the LFG to the blower station. Pressure can be negative (vacuum) or positive, relative to atmospheric pressure. For practical purposes, the atmospheric pressure is referenced as zero, although atmospheric pressure is approximately 14.7 pounds per square inch atmospheric (psia) or 406.8 in w.c. Most pressure meters display zero at atmospheric pressure and hence read negative values for vacuum and positive values for pressure.

Pressure is measured at individual extraction wells and extraction points to determine the resistance to LFG flow through the refuse. Concentration and flow being equal, a high vacuum measured at an extraction well indicates that the permeability of the refuse to LFG flow is much lower than typical. High vacuum combined with low methane quality indicates that LFG is being extracted at too great of a rate and may be drawing air into the refuse.

Positive pressure is usually present at LFG wells when LFG is being produced in the refuse but is not being extracted sufficiently (e.g., from a well with a closed valve). If a well is fully closed, there should be a slight positive pressure within the well and collection lateral. Negative pressure may be measured in a well, even when the adjustment valve is closed, if the well is within the area of influence of another well under active vacuum.

Because of the variability of LFG generation in landfills, there are no set criteria for determining operational pressure settings for wells or header pipes. In wet climates, initial vacuum settings could be as high as 10 to 12 in. w.c. The vacuum in the main header piping should vary gradually with distance from the blower, and be greatest at the blower inlet and lowest at the farthest monitoring point of the gas collection system.

### 8.3.2 LFG Composition

LFG is composed primarily of methane and carbon dioxide. Nitrogen and oxygen are also commonly found in LFG and result from atmospheric air being drawn into the landfill. A monitoring device, such as a Landtec GEM 2000 analyzer, is designed to measure methane, carbon dioxide, and oxygen. The balance gas indicated by this analyzer represents the remaining percentage of gas not consisting of methane (or flammables), carbon dioxide, and oxygen, which is typically assumed to be primarily nitrogen and a minor amount of trace organic compounds.

Methane constitutes the combustible portion of LFG. Under static (non-extraction) conditions, the methane content of LFG typically is between 50 and 70 percent, by volume. If the applied vacuum to the wells is decreased, the methane content will tend to increase as the extraction rate drops below the generation rate. Opening the well valve and increasing the vacuum are usually accompanied by a gradual decrease in the methane content. Periodic monitoring and adjustments are required to maintain optimum LFG quality.

Monitoring the nitrogen (balance gas) content is also useful to determine the proper withdrawal rate from a well. The amount of LFG withdrawn from an extraction well can be increased until balance gas is detected. The withdrawal rate is then adjusted to maintain a maximum allowable concentration of 15 percent nitrogen in the gas (lower concentrations (0.0 to 5 percent) are preferred).

Oxygen concentrations at wells should be held to 1.5 percent or below. Oxygen should never be allowed to exceed 2 percent. High oxygen concentrations usually indicate an air leak. Moderate oxygen concentrations, less than 1.5 percent, usually indicate air intrusion or a poor, well-bore seal.

## 8.4 LFG Extraction Monitoring Procedures

The following typical monitoring procedures are used periodically to evaluate the operating conditions at each well and to manage LFG emissions and migration. Record weather observations (clear, sunny, overcast, rainy, etc.).

1. Calibrate the field monitoring equipment.
2. Record system flow rate, vacuum, LFG composition, and LFG temperature at the inlet to the blower skid KOP.
3. Record vacuum at the blower inlet.

4. Measure pressure (positive or negative) and LFG composition (methane, oxygen, carbon dioxide, and balance gas) at each extraction well without making adjustments.
5. Measure pressure and LFG concentration at each header monitoring port without making adjustments.
6. Evaluate data, begin well field monitoring and tuning as needed, and return to field to make adjustments to wells.

General inspections, which should be performed during routine monitoring include:

1. Check condition of landfill cover for differential settlement, penetrations, or erosion.
2. Check for landfill odors, indicating LFG emission points.
3. Check piping for leaking condensate or LFG.
4. Check piping for missing or open sampling valves or plugs, which could cause oxygen leaks.

## 8.5 LFG Well Adjustment

The key to efficient operation of the LFG collection system is to extract LFG from individual extraction wells at approximately the same rate as it is generated. It is also important not to attempt to extract significantly more LFG than is generated, as this induces air intrusion into the refuse. Oxygen in the intruding air changes the anaerobic environment needed by the microorganisms to live and produce methane gas.

Intrusion of air into the refuse also increases the risk of igniting a sub-surface fire, when certain temperature and chemical conditions are also available. The potential of over- or under-extraction can be minimized by proper periodic monitoring and adjusting of the collection field.

The quantity and quality of LFG generated within a landfill varies from area to area and time to time. A practical way to determine the amount of LFG that can be extracted from the entire LFG collection system is to optimize each well or collector independently. The quantity of LFG withdrawn from a particular well or collector is determined based on monitoring the concentrations of the extracted LFG and maintaining the methane in a suitable range. The total baseline flow rate is the sum of the optimized amounts of LFG extracted from each well.

During start-up monitoring, frequent adjustments should be made to the well vacuums to attain an acceptable equilibrium gas concentration. The well adjustment guidelines in Table 8-1 are proposed to obtain optimum methane composition (48 to 52 percent by volume) in the total flow and at each well, and to manage LFG emissions and migration.

The following table provides general guidelines for adjusting individual wells and extraction points. This table should be refined based upon actual data and adjustment results from the well field.

**TABLE 8-1**
**LFG Well System Adjustment Guidelines**

| Oxygen (%V) | Balance (%V) | Methane (%V) | Action | Condition |
|---|---|---|---|---|
| <0.1 | <2.0 | >60 | Open valve to increase vacuum by 20% | Significant under-extraction |
| <0.3 | <5.0 | >54 | Open valve to increase vacuum by 10% | Minor under-extraction |
| <0.5 | <7.0 | <54 but >50 | Maintain same pressure | Optimum conditions; do not adjust. |
| <0.5, <1.5 | <15 | <50 but >47 | Close valve to reduce vacuum by 10% | Air intrusion may be impacting methane generation, reduce extraction |
| >1.5 | <20 | <47 but >40 | Close valve to reduce vacuum by 75% | Well over-drawn, close valve. |
| >2.0 | <25 | <40 | Close valve to allow positive pressure build-up | Well stress, close value until composition improves. |

### 8.5.1 Minimizing LFG Over-Extraction

The NSPS requires implementing procedures to minimize over-extraction of LFG. Overextraction of LFG can be minimized by:

- In general, attempt to maintain similar vacuums at all wells constructed to similar depths, in a localized area. This provides more even distribution of vacuum in the refuse, and more efficient LFG extraction.
- Observe monitoring data trends in LFG well temperature, balance gas concentrations, and methane/carbon dioxide ratios. If temperature or balance gas increases suddenly, or the methane/carbon dioxide ration decreases suddenly, over-extraction may be introducing oxygen into the waste.
- Avoiding drastic increases in the extraction rate of LFG from the entire LFG system and individual wells.
- When adjusting a well, increase applied vacuum and flow rate in gradual increments. Avoid increasing the vacuum at a well by more than 20 percent during any single day. As an example, if the pressure at a well is -5 in w.c., do not increase the vacuum to greater than -6 in w.c. (i.e., + 20 percent) during any single day.
- Do not increase vacuum to all wells in a given area, simultaneously. If additional extraction is needed from a large area, increase flow rates at non-adjacent wells on one day and the middle wells on another day.
- When well vacuum is increased, pay particular attention to these wells during the next monitoring round to ensure the well is not being over-pulled.

## 8.6 Instrumentation

A variety of instruments can be used for the measurement of gas composition. Some of the common measuring devices used are the Gastech, Landtec GEM 2000, and Siemens Ultramat 23 analyzers. Pressure alone can be measured by using manometers, Magnehelic gauges, or the Zephyr monitors.

The following instruments are examples of monitoring instruments for various parameters:

- Landtec GEM 2000 → LFG composition and pressure.
- Zephyr → Velocity meter.
- Dwyer Magnehelic gauge → Back-up pressure meter.
- Flame Ionization Detector (FID) → Landfill surface sweeps.
- Siemens Ultramat 23 → LFG composition (up to 3 gases).

## 8.7 Frequency

During the initial system start-up and balancing phase, the LFG composition from the wells should be monitored and adjusted as needed (typically daily then weekly), except in the event of an upset. After the system has stabilized, monitoring and system adjustments should be done at least one time per month based on operating reliability, gas quality, and any off-site migration. LFG pressure at each operating main header shall be monitored and recorded monthly to assess system performance.

## 8.8 GCCS Operating Requirements

The GCCS will be operated, monitored, and maintained in accordance with the operational procedures listed below:

- Measure and record temperature, gauge pressure, methane, carbon dioxide, oxygen, and temperature at each active gas collection (well head) system on a monthly basis.
- Continuously measure and record temperature, methane, and oxygen at the blower discharge.
- Record flow to the generator every five minutes.
- Measure and record other gas constituents as determined necessary for generator operation or permit compliance.
- Maintain all supporting information, data, calculations, sample reports, and measurements used to calculate emissions in a permanent form suitable for inspection for at least five years from the date of such records.

## 8.9 Basic Landfill Health and Safety

The Mount Airy landfill site is an operating landfill with significant personnel and equipment activity. The site has potential hazards typically associated with a large active, construction site. Basic health and safety measures associated with operation of the landfill will be followed.

The following is a list of some of the potential site-specific hazards that may be encountered:

- Exposure to LFG, hydrogen sulphide, condensate, and/or leachate.
- Frequent heavy earthmoving equipment operations and other vehicle traffic.
- Confined spaces, which may contain LFG or oxygen deficient atmospheres.
- Motors, blowers, pumps, and other rotating equipment.
- Control panels and other energized electrical devices.
- Pressurized (with compressed air) pipelines and processing equipment.

In general, personnel should use common sense and good judgment as around any industrial or commercial site. Monitoring personnel should avoid breathing LFG. Personnel shall wear protective gloves, goggles, and clothing when handling condensate pumps or working with condensate or leachate generated from the landfill. In addition, monitoring personnel should be completely familiar with this operations manual, as well as the applicable equipment manufacturers' literature, before attempting any operations.

## 8.10 Sub-Surface Refuse Fires

Sub-surface refuse fires are caused by over-extraction of LFG from the refuse and infiltration of oxygen into the refuse. Every landfill is different, so it is impossible to predict the likelihood of a landfill fire being started due to air intrusion. Some fires may start from oxidation or other physical changes that might occur within the refuse, but all fires require an oxygen source to continue. If oxygen and balance gas concentrations within the landfill are minimized, fire potential can also be minimized. Indications of sub-surface refuse fires include:

- Smoke emitting from landfill cover openings.
- Extra-ordinary and rapid subsidence of a localized landfill area.
- Presence of carbon monoxide in the extracted LFG.

To test for the existence and extent of a sub-surface refuse fire:

- Measure the temperature of the LFG being extracted from the wells near the suspected fire area. (In general, LFG well temperatures should not exceed 130°F during normal operation.).
- Measure the temperature of the ground in the suspected fire area. (Ground temperature should not exceed ambient air temperature by more than a few degrees Fahrenheit).
- Monitor the extracted LFG for carbon monoxide using a Draeger-type calorimetric indicator tube or a carbon monoxide meter. (LFG typically will not contain detectable carbon monoxide unless a fire is present nearby. Carbon monoxide concentrations near a sub-surface fire may vary from 100 to 1,000 parts per million by volume in air [ppmv].)

If an active sub-surface refuse fire is confirmed, the LFG flow from the wells in the area of the fire (for a minimum radius of 300 feet) must be temporarily shut-off to minimize further oxygen infiltration into the refuse.

Immediately notify the Surry County Public Works Director if a subsurface refuse fire is suspected and follow proper protocols for notification of fire officials and the NCDENR Solid Waste Section.

### 8.11 Records and Recordkeeping

Comprehensive and clearly organized records are important for the following activities:

- Evaluation of extraction system performance.
- Proper design of modifications.
- Construction records.
- Training and guidance of new operators.
- Budgeting purposes.
- Regulatory agency review.

Recordkeeping forces an operator to ask the "what," "when," "how," and "why," questions about the collection system, allowing the most reliable and efficient operation. Keeping an operations log is an excellent practice followed by many operators. The log, contributed to by all operators, is a place to record daily events, maintenance activities, discussions with regulatory personnel, summary descriptions of adjustments made, problems encountered, etc. It allows new or temporary operators coming on duty to review earlier activities, maintenance, and adjustment history.

## 9.0 MAINTENANCE

### 9.1 Purpose

The LFG system includes piping, equipment, and instrumentation that must be periodically inspected and properly maintained to provide reliable and continuous operation. The purpose of this section is to provide general guidance for inspecting and maintaining the piping system and specific major equipment and instrumentation. This guide provides the procedures for routine work only, and is intended to complement more detailed procedures provided in equipment manufacturer's guidelines.

To maintain warranty protection, in the case of any conflicts, the manufacturers' specific instructions take precedence and must be consulted and read before any routine or nonroutine monitoring or maintenance is performed. In addition to routine maintenance, the manufacturers' instructions contain critical information on installing, operating, adjusting, calibrating, testing, monitoring, and troubleshooting.

### 9.2 LFG Collection System

Because there are few moving parts, there are simularly only a few maintenance procedures associated with the LFG collection system. Although the collection system is constructed from relatively durable materials, normal wear and tear occurs due to weathering, landfill settlement and temperature stresses.

### 9.2.1 General Inspection

After the start-up transition period, once the LFG collection system operation is stabilized, all collection system piping and wells should be inspected monthly. This can be done in conjunction with routine LFG monitoring and extraction balancing procedures, although it is often more efficient when performed separately, to allow for immediate implementation of minor repairs. If performed separately, it is best to schedule the inspection and repairs at least two to three days before the monitoring and balancing to allow the LFG collection system to equilibrate to any modifications made.

The following conditions should be inspected for and scheduled for repair if required:

- Well heads, which have shifted due to landfill or cover movement.
- Well bore backfill, which has settled, should be backfilled to slightly above grade, and the well bore seal should be adjusted if required.
- Wells with increasing vacuum requirements, indicating liquid accumulation or other interference with the well casing perforations.
- Abnormal decreases in available pipeline vacuum, indicating a downstream obstruction.
- Pipe alignments which have shifted or pipe supports, which have been disturbed.
- Pipe locations with sounds of gurgling or surging water, indicating poor condensate drainage.
- Condensate or LFG pipe leaks.
- Missing or open labcock valves or access ports.

In conjunction with routine LFG collection system inspection, the following general landfill conditions should also be noted:

- Condition of landfill cover (dead vegetation, holes, burrows, unusual settlement, or erosion).
- Landfill odors.

### 9.2.2 Routine Preventive Maintenance

The following checklist provides effective measures to prevent conditions that may cause breaks or other emergency failures:

- Transition from wellhead to lateral piping. (Any observed stress points and misalignments should be scheduled for correction as soon as possible.)
- Wellhead control valves, labcock fittings, and flex hose connections should be replaced when damage is evident.
- Cracks in pipes, fittings, valves, or joints should be repaired immediately.

- Cracks and depressions that develop on the landfill surface should be filled with soil, compacted, and graded as soon as they appear to prevent air and water from entering the landfill.

## 9.3 Blower Station

All blower station equipment, controls, and instrumentation must be maintained in compliance with manufacturer's recommendations. The following are general maintenance activities required to maintain effectiveness of the blower station's major components and do not supersede the procedure's outlined in the manufacturer's instructions.

### 9.3.1 Blower Station Knock-Out Pot

- Periodically, check for liquid accumulation in the KOP. Clear any drainage line obstructions, if required.
- Periodically monitor pressure drop across the KOP. Clean or replace the demister when the pressure drop has increased to twice the normal pressure drop for the clean condition.

### 9.3.2 Pneumatic Blower Recirculation Valve

- The pneumatic valve actuator on the recirculation loop valve at the blower skid has a nominal operating pressure requirement of 90 psig and a maximum operating pressure of 125 psi. Note the air pressure at the regulator gauge on every O&M service visit. Adjust, if required, so as not to exceed valve actuator pressure rating.
- Check for leaks in the air supply line, solenoid valve, and actuator cylinder seals. Repair leaks and replace seals as required.
- Lubricate actuator and valve mechanism as recommended by the manufacturer.

### 9.3.3 Blower

- Rotate the blowers weekly (if spare) to ensure even wear and to prevent motor or bearing freeze-up.
- Inspect each blower operation during normal operation, listening for unusual noises and feeling for abnormal vibrations. Check the shaft-bearing housings to detect an overheating bearing, which may indicate high friction and imminent failure.
- Lubricate the bearings once every 1,500 to 2,000 hours of normal operation and every 750 to 1,000 hours of severe operation. Use only lubricants recommended by the manufacturer's instructions. Do not over-lubricate. Over-lubrication and consequent seal damage is the most frequent cause of bearing failure. Check manufacturer's recommendation for lubrication procedures.
- If an unusual noise or vibration is detected, consult the Roots User Manual. The cause of the noise or vibration must be mitigated in accordance with the instructions.

### 9.3.4 Instrumentation

- Calibrate the flow meter annually in accordance with manufacturer recommendations. Carbon credit monetization may require more frequent calibration (refer to CAR protocol).
- Periodically inspect control panels and test indicator lights for correct operation. Replace indicator bulbs if required.
- Periodically test the auto-dialer response and phone line for correct operation.

## 9.4 Condensate Collection System Operation

### 9.4.1 LFG Transmission Pipe Condensate Collection System

- Inspect the GCCS for low points along the laterals and headers to prevent condensate accumulation.
- Inspect the laterals and headers for any cracks or leaks.

### 9.4.2 Condensate Pumps

- At least monthly, check pump cycling on the condensate sump pumps to ensure proper operation. Check the air supply and adjust in accordance with manufacturer recommendations. Pull and inspect the inlet screen for debris and blockages. Clean as necessary.
- If the pump fails to run properly, consult the manufacturers troubleshooting guide. Be sure that the air supply to the pump is off and at 0 psi before performing repairs to the equipment.

## 9.5 Maintenance Records

The LFG control system maintenance records should be comprehensive and clearly organized. A good set of records and the following practices will enhance successful long-term operation of the systems and facilitate regulatory compliance:

- Periodic independent evaluation of the systems' overall condition and performance.
- Scheduling maintenance or repair before failures occur.
- Advance budgeting of funds for maintenance and repairs.
- Thorough training of maintenance personnel.
- Annual review of requirements, documentation, site conditions, and performance with regulatory agencies.

# 10.0 TROUBLESHOOTING

Troubleshooting is the process by which operational problems can be quickly identified and rectified thus reducing the system downtime. Based on experience with similar LFG systems, the following generic troubleshooting checklists have been developeled to assist the GCCS operations staff. These checklists relate symptoms frequently identified in the field to a specific cause. The recommendations in the checklist are intended to enable the operator to identify the possible location and cause of a problem and resolve simple problems. The troubleshooting checklist is divided into four sections:

- LFG collection system.
- Blower station.
- Transmission pipeline.
- Condensate collection system.

## 10.1 LFG Collection System

The LFG collection system consists of the LFG extraction wells, LFG lateral and header piping, fittings, and control valves. Table 10-1 presents the most commonly occurring problems and solutions for these problems.

**TABLE 10-1**
**LFG Collection System Troubleshooting Checklist**

| Observation | Possible Symptom and Cause | Solution |
|---|---|---|
| Vertical extraction well high oxygen concentration | 1. Leaky sample port connection.<br>▪ Quick connect fitting is damaged or does not provide a positive seal.<br>▪ Labcock port is enlarged; threads are damaged.<br>2. Bad or loose hose connection with meter.<br>▪ Old and worn out hose.<br>3. Break in well lateral upstream of sample port.<br>▪ Test by monitoring the sample port at wellhead.<br>4. Bad bore seal.<br>5. None of the above causes were found.<br>▪ Overdrawing on the well.<br>6. Damaged well head | 1. Plug, redrill sample port and utilize Teflon tape on threads.<br>2. Fix hose connection, replace every 12 months or sooner.<br>3. Repair lateral with coupler or by cutting out broken pipe and refusing a new piece.<br>4. Replace bore seal.<br>5. Adjust valve setting lower or shutoff to prevent air intrusion.<br>6. Replace well head. |
| Low methane concentration (<48%) | 1. Air leak.<br>▪ See high oxygen concentration troubleshooting.<br>2. Over drawing on the well.<br>▪ Check well's historical vacuums. | 1. Check for:<br>▪ Instrument performance and accuracy.<br>▪ Sample port positive seal.<br>▪ Inspect piping for breaks.<br>2. Adjust valve setting lower. |

**TABLE 10-1**
**LFG Collection System Troubleshooting Checklist**

| Observation | Possible Symptom and Cause | Solution |
|---|---|---|
| High Nitrogen/ Balance gas (>16%) | 1. Air leak.<br>▪ See high oxygen concentration troubleshooting.<br>2. Over drawing on the well.<br>▪ Check well's historical vacuums. | 1. Check for:<br>▪ Instrument performance and accuracy.<br>▪ Sample port positive seal.<br>▪ Inspect piping for breaks.<br>2. Adjust valve setting lower. |
| Fluctuating pressure readings | 1. Partial condensate blockage in lateral.<br>▪ Listen to well lateral for surging of gas or gargling of condensate.<br>2. Main header pipe partially blocked by condensate.<br>▪ Listen to well lateral for surging of gas or gargling of condensate. | 1. If significant, shut off well at valve and drain condensate.<br>2. Check operation of condensate sump.<br>3. Realign piping for drainage of condensate if necessary. |

## 10.2 Blower Station

The blower station encompasses all equipment associated with the blower and after cooler and its operation. Table 10-2 presents the common symptoms and fixes associated with the blower and its operation.

**TABLE 10-2**
**Blower Station Troubleshooting Checklist**

| Observation | Possible Symptom and Cause | Solution |
|---|---|---|
| Blower will not start | 1. Low LFG flow.<br>2. Power failure.<br>▪ Check controller fuses and power circuit breakers.<br>3. VFD - NO VFD "ON".<br>4. Alarm sensor malfunction | 1. Reset alarms and follow start-up procedure.<br>2. Check Generator permissives.<br>3. Switch "ON"<br>4. Check sensor outputs. |
| Blower failure light ON | 1. Electrical failure.<br>▪ Electrical power outage.<br>2. Vibration.<br>▪ Anchor bolts loose.<br>▪ Unbalanced rotor.<br>3. Bearings or drive coupling.<br>▪ Worn out bearings or coupling.<br>4. Motor not operational.<br>▪ No LFG flow due to closed valve or pipe obstruction<br>▪ Current overload<br>▪ Bearings worn | 1. Reset alarms and follow start-up procedure.<br>2. Tighten or replace anchor bolts. Repair or replace rotor.<br>3. Replace blower bearings or coupling.<br>4. Check and restore LFG flow. Call electrician to troubleshoot motor or supply wiring. |

## 10.3 LFG Transmission Pipeline

The LFG transmission pipeline consists of the LFG conveyance pipe between LFG wells and the blower station, associated fittings, control valves, and access vaults. Table 10-3 presents the most commonly occurring problems and solutions for these problems.

**TABLE 10-3**
**LFG Pipeline Troubleshooting Checklist**

| Observation | Possible Symptom and Cause | Solution |
|---|---|---|
| High oxygen concentration | 1. Leaky sample port connection.<br>▪ Quick-connect port damaged.<br>▪ Labcock port is enlarged; threads are damaged.<br>2. Bad or loose hose connection with meter.<br>▪ Old and worn out hose.<br>3. Break in pipe upstream of sample port.<br>▪ Test by monitoring next upstream sample port.<br>4. Bad flange joint.<br>▪ Bad/leaky gasket.<br>5. None of the above causes were found.<br>▪ Overdrawing on the collection field. | 1. Plug, redrill sample port and utilize Teflon tape on threads. Replace quick-connect port<br>2. Fix hose connection, replace every 12 months or sooner.<br>3. Repair with patch or new pipe section.<br>4. Replace gasket.<br>5. Rebalance collection field wells. |
| Low methane concentration (<48%) | 1. Air leak.<br>▪ See high oxygen concentration troubleshooting.<br>2. Over drawing on the collection field.<br>▪ Check well's historical vacuums. | 1. Check for:<br>▪ Instrument performance and accuracy.<br>▪ Sample port positive seal.<br>▪ Inspect piping for breaks.<br>2. Adjust valve setting lower. |
| High Nitrogen/ Balance gas (>16%) | 1. Air leak.<br>▪ See high oxygen concentration troubleshooting.<br>2. Over drawing on the collection field.<br>▪ Check well's historical vacuums. | 1. Check for:<br>▪ Instrument performance and accuracy.<br>▪ Sample port positive seal.<br>▪ Inspect piping for breaks.<br>2. Adjust valve setting lower. |
| Fluctuating pressure Readings | 1. Partial condensate blockage.<br>▪ Listen to pipe for surging of gas or gargling of condensate. | 1. Isolate pipeline for 30 minutes,<br>2. Determine if liquid clears, by gravity flow.<br>3. Check operation of nearest condensate sump, may need to regrade header, change velocity, or clear condensate sump obstruction. |

## 10.4 Condensate Collection System

The condensate collection system includes the KOP, inlet sump, and pump. Table 10-4 presents the troubleshooting checklist for the condensate collection system.

**TABLE 10-4**
**Condensate Collection System Troubleshooting Checklist**

| Observation | Possible Symptom and Cause | Solution |
|---|---|---|
| KOP not draining | 1. KOP discharge blocked.<br>▪ Check history of condensate volume. | 1. Check valve open.<br>2. Clean discharge.<br>3. Inspect drain line and fittings to sump.<br>4. Snake/blow out drain line |
| Sump Pump Not Pumping | 1. Insufficient air supply.<br>2. Float stuck<br>3. Inlet clogged<br>4. Vacuum lock | 1. Check air supply<br>2. Pull pump, shake, reinstall.<br>3. Inspect inlet for clog. Clean.<br>4. Replace pump with spare. |

# APPENDIX A

# Glossary of LFG Terms

# APPENDIX A

## Glossary of LFG Terms

A glossary of common words and terms used in LFG collection is included in this section to assist any readers unfamiliar with the LFG industry.

| | |
|---|---|
| Aerobic | Requiring the presence of air or free oxygen for life. |
| Anaerobic | Living in the absence of air or free oxygen. |
| Asphyxiates | Chemicals or compounds that displace air or remove oxygen, potentially rendering a person unconscious from the lack of oxygen in the blood or causing suffocation. |
| Auto | Automatic. |
| Bar-hole Survey | A method of investigating gas migration in soils by using a 3/8-inch diameter, 5-foot-long steel rod to form a narrow hole in the soil. An explosimeter probe is then inserted into the hole to sample the soil gases. |
| Biodegradable | Capable of decaying and being absorbed by the environment as a result of microbial activity. |
| Breakthrough | The condition where air is drawn into refuse due to excessive vacuum from a collection well. Breakthrough can be dangerous since oxygen introduced into refuse can initiate a landfill fire. |
| Btu | British thermal unit; a measure of the amount of heat needed to raise one pound of water by 1 DegF. One cubic foot of methane releases 1,068 BTUs when burned. |
| Bypass | An arrangement of electrical or piping circuits enabling passage around a certain appurtenance or its components. |
| CFR | Code of Federal Regulations |
| $CH_4$ | Chemical formula for methane, expressed as percent by volume or read in LEL (see definition) range. |
| CO | Chemical formula for carbon monoxide. |
| $CO_2$ | Chemical formula for carbon dioxide. |
| Condensate | The liquid that forms in LFG piping as the moisture in LFG cools and condenses. |
| Efficiency | The result of any operation compared with the effort required to achieve the results. It is the ratio of the total output to the total input expressed as a percentage. |
| Explosimeter | A device used to measure the combustible gas and oxygen concentrations by volume for a given sample. |

| | |
|---|---|
| Fahrenheit | A temperature scale in which 32 DegF marks the freezing point and 212 DegF marks the boiling point of water at 760 millimeters (mm) barometric pressure (1 ATM). DegF = 5/9(DegC-32). |
| Gas Migration | The movement of gas from the interior of a landfill outward and upward through the voids of the refuse and surrounding soils. |
| GCCS | Landfill gas collection and control system. |
| gpd | U.S. gallons per day. |
| gph | U.S. gallons per hour. |
| gpm | U.S. gallons per minute. |
| HDPE | High Density Polyethylene – A plastic pipe material resistant to most organic chemicals and less rigid than PVC pipe. HDPE pipe is manufactured according to its SDR size. |
| Header | A main pipeline from which gas collection laterals branch off. |
| Head Loss | The decrease in energy head between two points. It can result from friction in bends, pipe length, valves, obstructions, or other causes. It is the difference between the total heads at two points in a hydraulic system. |
| HMI | Human-Machine Interface |
| hp | horsepower |
| HOA | Hand-Off-Auto (switch control for electrical systems such as pumps and blowers). |
| Inches of Water Column | Units of pressure. The pressure at the bottom of a vertical column of water is equal to the height of that column. One psi is equal to 27.7 in. w.c. at standard temperature and pressure. |
| ISO | Instrumentation System Output |
| KOP | Knock-Out Pot |
| kWe | Kilowatt |
| Labcock | A small ball valve with a barbed fitting used to sample gas conditions within a pipe. It is also called a petcock. |
| Landfill Fire | Combustion that occurs when oxygen is introduced in warm areas of refuse within a landfill. Landfill fires are usually sub-surface smoldering conditions noted by surface depressions caused by material consumed underneath. |
| LCRS | Leachate Collection and Removal System |
| LEL | Lower explosion limit (LEL), which, for methane, is 5 percent by volume. This represents the minimum concentration of a fuel (by volume) necessary to sustain combustion. |
| LFG | Landfill gas |

| | |
|---|---|
| Manometer | An instrument for measuring pressure. Manometers are manufactured either as gauges or as electronic devices. |
| MCC | Motor control center. |
| Methanogenic | Microbial activity that produces methane. |
| Monitoring | The measurement, sometimes continuous, of LFG parameters such as flow, percent CH4, percent $O_2$, and pressure. |
| MSW | Municipal Solid Waste |
| MSWLF | Municipal Solid Waste Landfill |
| NCDENR | North Carolina Department of Environment and Natural Resources. |
| NCDENR - DAQ | Division of Air Quality |
| NCDENR - DWM | Division of Waste Management |
| NMOCs | Non-Methane Organic Compounds |
| NSPS | New Source Performance Standards |
| $O_2$ | Chemical formula for oxygen. |
| O&M | Operations and Maintenance. |
| Passive System | Gas collection without vacuum pressure otherwise provided by mechanical means. |
| Petcock | A small ball valve with a barbed fitting used to sample gas conditions within a pipe. It is also called a labcock. |
| Pitot Tube | A flow measuring device consisting of an L-shaped tube inserted into the gas stream of a pipe. The difference in pressure between the top two leads of the pitot tube corresponds to the flow of gas through the pipe. |
| PLC | Programmable Logic Controller |
| Probes | Gas probes are narrow pipes bored into soils, usually adjacent to the landfill, used as conduits to detect gas in the soil. |
| psia | Pounds per square inch atmospheric |
| PSIG | Pounds per square inch gage |
| PVC | Polyvinyl chloride. It is a common rigid plastic pipe material resistant to most acids and organic compounds. PVC pipe is generally manufactured in two wall thicknesses: Schedule 40 PVC and Schedule 80 PVC. |
| Radius of Influence | The distance that vacuum from a LFG collection well or trench is available in the surrounding refuse. Theoretically the limit of influence is circular around a well. Since refuse is heterogeneous, however, the radius of influence can vary greatly around individual wells or trenches. |

| | |
|---|---|
| Saturated | Saturated refers to LFG holding the maximum amount of water vapor at a particular temperature and pressure. Vapor will condense and precipitate out as the temperature decreases or the pressure increases. |
| scfm | Standard cubic feet per minute at standard temperature and pressure. (A measure of the rate of flow.) |
| Scrubber | A device used to reduce the amount of particulate in the stream flow of a gas. A scrubber consists of a chamber much larger than the inlet diameter. The gas stream enters the chamber tangentially and exits axially or radially. Particulates drop out of the stream flow because they impinge on the side of the scrubber and slow down in the large space of the scrubber chamber. |
| SDR | Standard Dimension Ratio. The ratio of the outer diameter of a pipe to its thickness (SDR = OD/t). SDR is used as a measurement of size for HDPE pipe. Note that the higher the SDR number, the thinner the pipe wall will be. |
| Pressure | Pressure is indicated by a measuring device that moves with the flow or by a device that causes no change in velocity. A conventional method for measuring pressure is by means of a hole drilled through the flow conduit. The hole must be located normal to the well surface; it is connected to a manometer or pressure gauge in reference to the outside ambient pressure. |
| TEFC | Totally enclosed, fan-cooled (refers to types of electric motors). |
| Thermal Anemometer | An electric gauge used to measure the velocity of a gas stream by sensing the cooling effect as the flow passes over the heated sensor of the anemometer. |
| UEL | Upper explosion limit in air; methane is 15 percent by volume. It is the maximum concentration of a fuel by the volume necessary to sustain combustion. For LFG, half of which is composed of methane, the methane UEL is 15 percent. |
| USEPA | United States Environmental Protection Agency. |
| UV | Ultraviolet light. It is the length of light rays given off when methane is burned. |
| Velocity Pressure | Measured using a pitot tube. Velocity pressure is used to determine the flow rate within a conduit or pipe. |
| VFD | Variable Frequency Drive |

# APPENDIX B

## Drawings

**(Record Drawings will be provided upon final completion)**

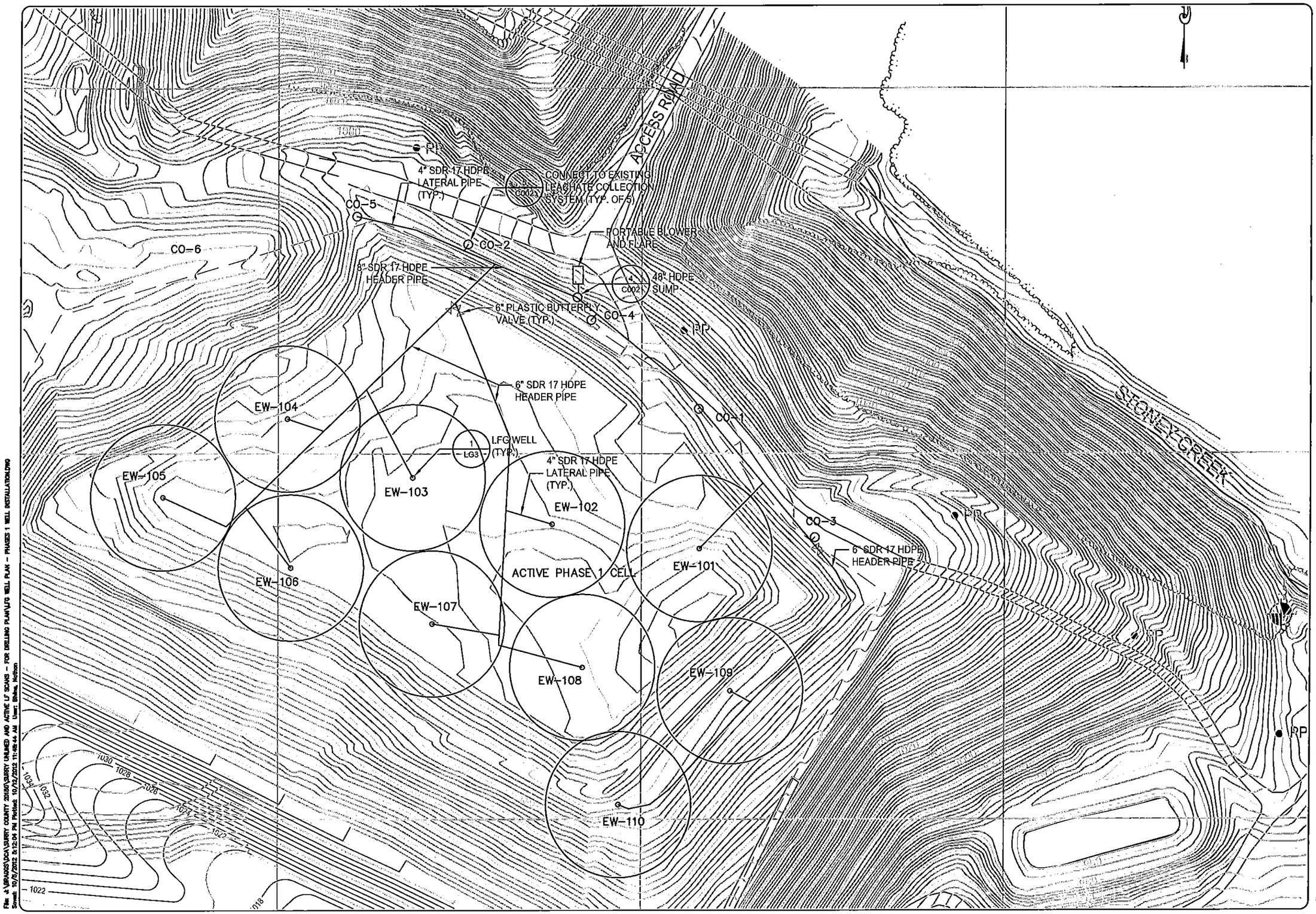


| No. | Submittal / Revision | Appd | By | Date |
|---|---|---|---|---|
| 1 | ISSUED FOR CONSTRUCTION | RCS | NTB | 9-20-12 |

SITE PLAN

NORTH CAROLINA PROFESSIONAL ENGINEER SEAL 20350 ROBERT C. SALLSON

APPROVED ALTERATION OR ADDITION TO THIS DOCUMENT IS PROHIBITED WITHOUT THE WRITTEN CONSENT OF THE ENGINEER IN RESPONSIBLE CHARGE

Drawing Copyright © 2010

CHA

6720 Fred Olds Boulevard, Suite 508 - Charlotte, NC 28217-4938
Main: (704) 527-0227 - www.chacompanies.com

Designed: RCS | Drawn: NTB | Checked: RCS

SURRY COUNTY
NORTH CAROLINA

PHASE 1 LFG TEST
WELL INSTALLATION

Issue Date: 9/2012 | Project No.: 21420 | Scale: AS SHOWN

C001

File: J:\SRVADOS\DCA\SURRY COUNTY 20350\SURRY UNLINED AND ACTIVE LF SCANS - FOR DRILLING PLAN\LFG WELL PLAN - PHASE 1 WELL INSTALLATION.DWG
Saved: 10/5/2012 5:12:04 PM Plotted: 10/5/2012 11:49:44 AM User: Bishop, Nathan

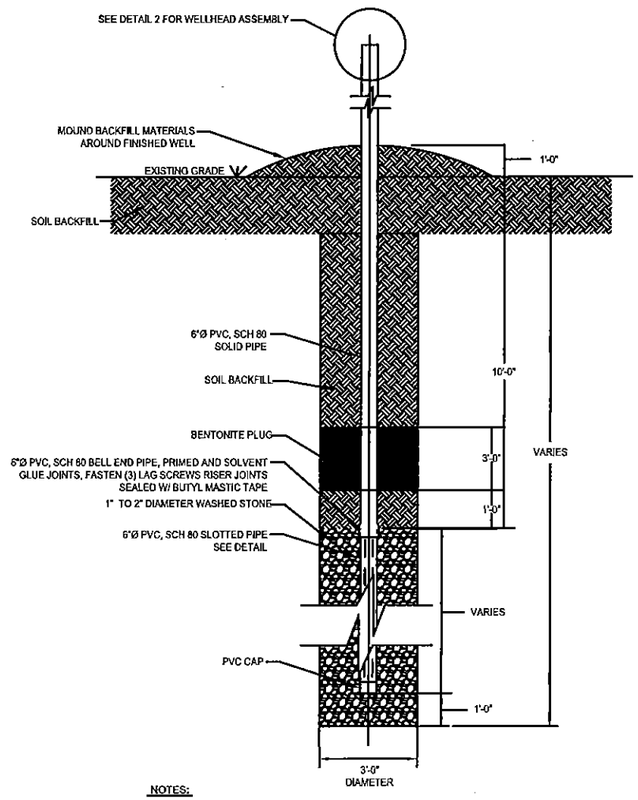


NOTES:

1. SOIL BACKFILL SHALL BE PLACED AND COMPACTED IN 8-12 IN LIFTS USING A METHOD APPROVED BY ENGINEER.
2. WELL BORING DEPTH WILL BE ADJUSTED IN FIELD AS REQUIRED..

GAS WELL DETAIL (1 / C002)
SCALE: N.T.S.

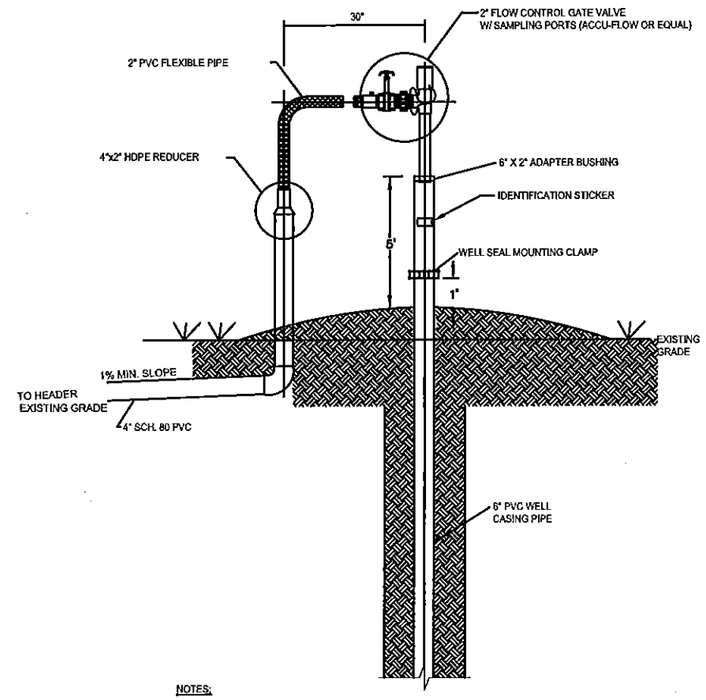


NOTES:

1. RESTORE ALL AREAS DISTURBED DURING CONSTRUCTION.

TYPICAL WELLHEAD ASSEMBLY AND PIPING DETAIL (2 / C002)
SCALE: N.T.S

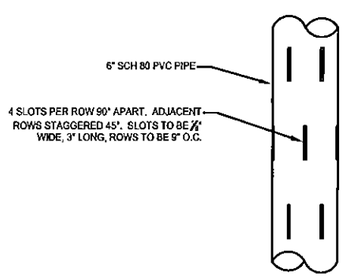


SLOTTED PIPE DETAIL (3 / C002)
SCALE: N.T.S.

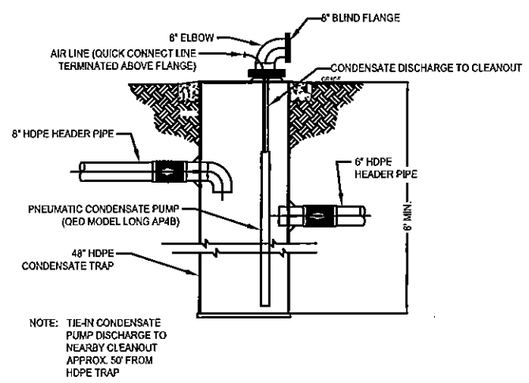


NOTE: TIE-IN CONDENSATE PUMP DISCHARGE TO NEARBY CLEANOUT APPROX. 50' FROM HDPE TRAP

CONDENSATE TRAP (4 / C002)
SCALE: N.T.S.

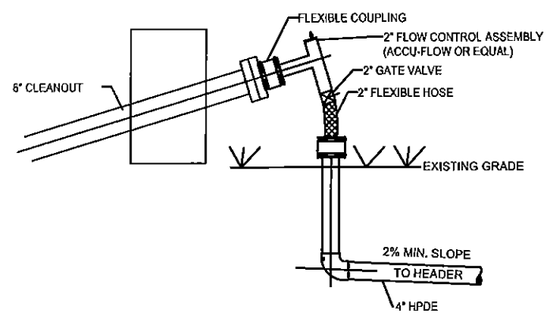


TYPICAL CLEANOUT ASSEMBLY AND PIPING (5 / C002)
SCALE: N.T.S.

| No. | Submittal / Revision | App'd | By | Date |
|---|---|---|---|---|
| 1 | ISSUED FOR CONSTRUCTION | RCS | NTB | 9-20-12 |

DETAILS

NORTH CAROLINA PROFESSIONAL ENGINEER SEAL 030 ROBERT C. SALLECH

UNAUTHORIZED ALTERATION OR ADDITION TO THIS DOCUMENT IS IN VIOLATION OF THE PROFESSIONAL ENGINEER SEAL ACT, PER GENERAL LAW.

CHA
8720 Red Oak Boulevard, Suite 509 - Charlotte, NC 28217-4008
Main: (704) 527-5227 - www.chacompanies.com

Drawing Copyright © 2010

Designed: RCS | Drawn: NTB | Checked: RCS

SURRY COUNTY
NORTH CAROLINA

PHASE 1 LFG TEST
WELL INSTALLATION

Issue Date: 6/2011 | Project No.: 21420 | Scale: AS SHOWN

C002

File: J:\BRANCH\DCA\SURRY COUNTY 2010\SURRY UNLINED AND ACTIVE LF SCANS - FOR DRILLING PLAN\LFG WELL PLAN - PHASES 1 WELL INSTALLATION.DWG
Saved: 10/5/2012 5:12:04 PM Plotted: 10/12/2012 11:49:14 AM User: Blake, Nathan

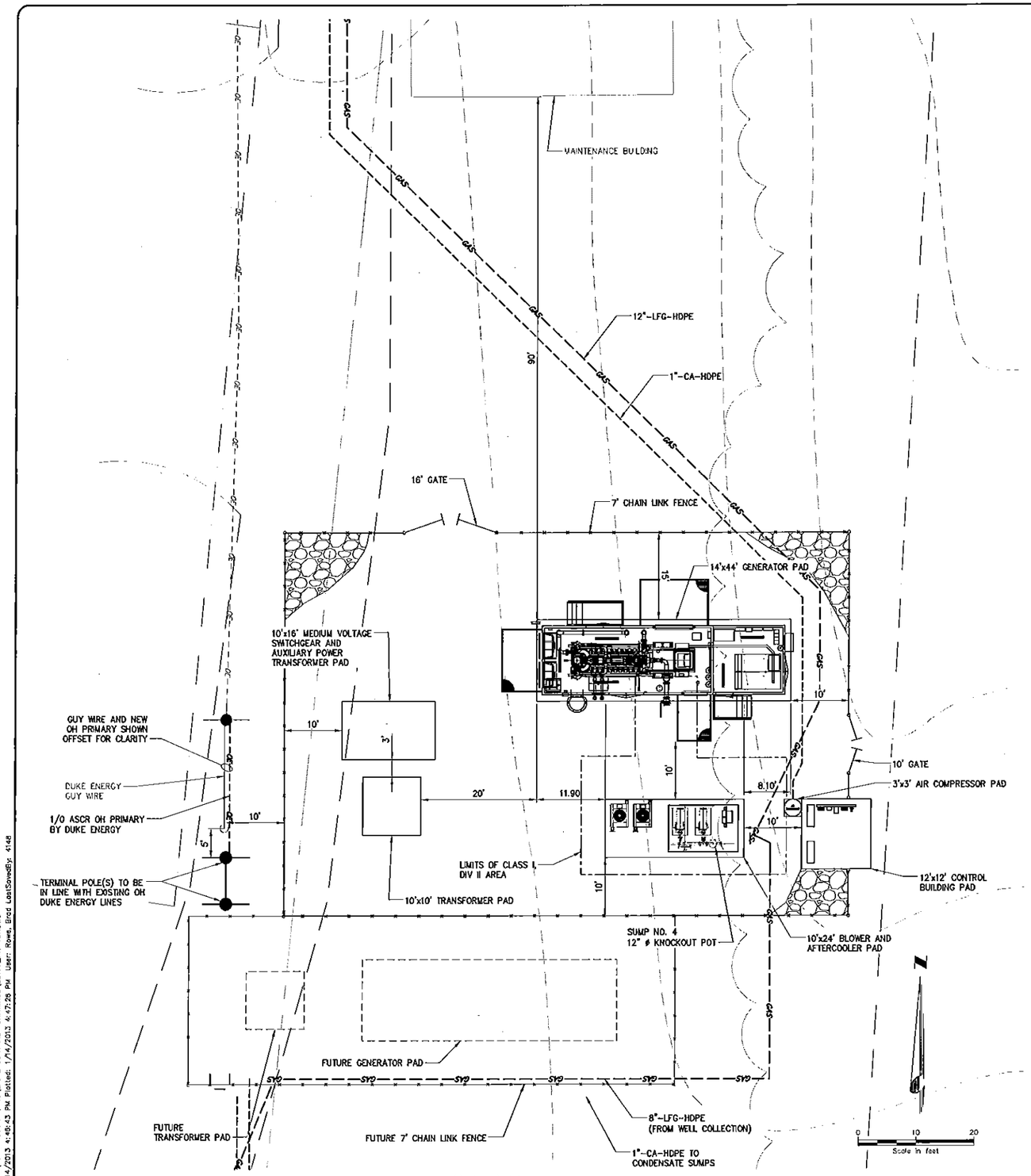


SITE PLAN
SCALE: 1"=10'-0"

## INDEX OF DRAWINGS – FOUNDATIONS PACKAGE


| DRAWING NO. | TITLE |
|---|---|
| PR-101 | GENSET SITE PLAN |
| PR-102 | FOUNDATION PLANS AND DETAILS |
| PR-103 | FOUNDATION DETAILS |


## LEGEND

PROPOSED

FUTURE

## PROJECT INFORMATION

SITE LOCATION: 237 LANDFILL ROAD
MT. AIRY, NORTH CAROLINA

OWNER: BARNABAS INVESTMENT GROUP, LLC


OWNER'S REPRESENTATIVE: GEORGE IRWIN
PETRA ENGINEERING, INC.
PHONE: 704-965-7918
EMAIL: girwin@petraeng.com


## GENERAL NOTES:

1. CONTRACTOR SHALL FIELD VERIFY ALL EXISTING SITE CONDITIONS PRIOR TO COMMENCING WORK AND SHALL IMMEDIATELY NOTIFY OWNER OF ANY DISCREPANCIES.
2. CONTRACTOR SHALL CONFINE ALL CONSTRUCTION ACTIVITIES ASSOCIATED WITH OR INCIDENTAL TO THE WORK SPECIFIED AND SHOWN AS PART OF THIS PROJECT TO THOSE AREAS WITHIN THE LIMITS OF CONSTRUCTION UNLESS OTHERWISE APPROVED BY OWNER.
3. CONTRACTOR SHALL BE SOLELY RESPONSIBLE FOR SITE SAFETY AND FOR COMPLIANCE WITH ALL FEDERAL, STATE AND LOCAL HEALTH AND SAFETY CODES, LAWS, REGULATIONS AND ORDINANCES INCLUDING, BUT NOT LIMITED TO THE OCCUPATIONAL SAFETY AND HEALTH ADMINISTRATION (OSHA).
4. CONTRACTOR SHALL RESTORE ALL AREAS DISTURBED BY CONSTRUCTION, INCLUDING ACCESS AND SITE ROADWAYS, DITCHES, DRAINAGE STRUCTURES AND OTHER EXISTING FEATURES TO THEIR ORIGINAL CONDITION OR TO A CONDITION SATISFACTORY TO OWNER.
5. ALL REQUIRED TEMPORARY EROSION AND SEDIMENT CONTROL MEASURES SHALL BE INSTALLED AND MAINTAINED BY THE CONTRACTOR IN ACCORDANCE WITH THE APPROVED SEDIMENT AND EROSION CONTROL PLAN.
6. CONTRACTOR SHALL OBTAIN ALL REQUIRED PERMITS AND PAY ALL FEES OF SUCH PRIOR TO COMMENCING ANY WORK.
7. CONTRACTOR SHALL BE RESPONSIBLE FOR THE STAKING AND LAYOUT OF ALL WORK.
8. CONTRACTOR SHALL CONFIRM ALL CONNECTIONS AND TIE-POINTS OF PROPOSED WORK WITH EXISTING AND PROPOSED FACILITIES INCLUDING ALL STRUCTURAL, MECHANICAL, PLUMBING, HVAC, AND ELECTRICAL SYSTEMS.
9. CONTRACTOR SHALL VERIFY ALL EQUIPMENT LAYOUTS, DIMENSIONS, FIT-UP AND CONTROL REQUIREMENTS.
10. CONTRACTOR SHALL BE RESPONSIBLE TO PROVIDE ALL LABOR, TEMPORARY WORK AND UTILITY SERVICES.
11. CONTINUOUS OPERATION OF THE EXISTING LANDFILL AND RECYCLING SYSTEMS TO BE MAINTAINED DURING CONSTRUCTION AND INSTALLATION OF THE PROPOSED LFGTE PROJECT COMPONENTS.
12. ACCESS TO ALL EXISTING COUNTY SOLID WASTE MANAGEMENT AND MAINTENANCE FACILITIES LOCATED AT THE SITE MUST BE MAINTAINED IN A MANOR SUITABLE FOR PUBLIC USE AND SAFETY.

| No. | Submittal / Revision | Appd | By | Date |
|---|---|---|---|---|
| 1 | BUILDING INSPECTION REVIEW | RCS | BSR | 12-2012 |

SURRY COUNTY, NORTH CAROLINA

NORTH CAROLINA PROFESSIONAL SEAL 20190 ENGINEER ROBERT C. SALLACH

Drawing Copyright © 2011


CHA
8720 Red Oak Boulevard, Suite 306 · Charlotte, NC 28217-4928
Main: (704) 527-5222 · www.chacompanies.com


Designed: RCS | Drawn: BSR | Checked: RCS

LANDFILL GAS TO ENERGY PROJECT

GENSET SITE PLAN

Issue Date: 01-2013 | Project No: 22177 | Scale: AS SHOWN

PR-101

File: I:\DWG\SURRY COUNTY, NC\LFGTE CONTRACT DRAWINGS\22177_PR-101.DWG
Saved: 1/14/2013 4:49:43 PM Plotted: 1/14/2013 4:47:26 PM User: Rowe, Brad LastSavedBy: 4148

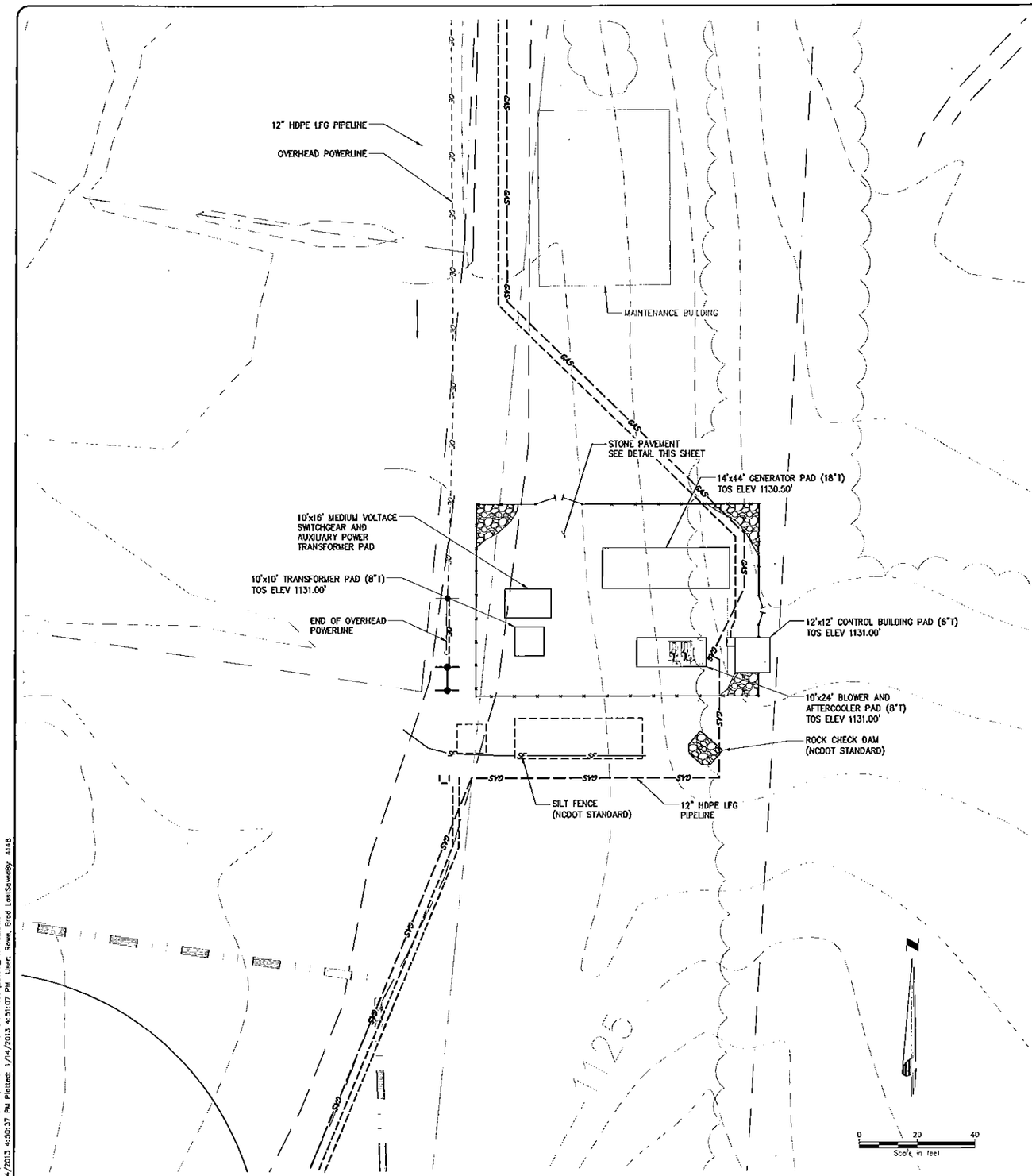


SITE PLAN
SCALE: 1"=20'-0"

## GENERAL NOTES:

1. CONTRACTOR SHALL FIELD VERIFY ALL EXISTING SITE CONDITIONS PRIOR TO COMMENCING WORK AND SHALL IMMEDIATELY NOTIFY OWNER OF ANY DISCREPANCIES.
2. LIMITS OF CONSTRUCTION FOR FOUNDATION PACKAGE SHALL BE SAME AS PROPOSED FENCE LOCATION WITH EXCEPTION OF PROPOSED SEDIMENT AND EROSION CONTROL MEASURES. CONTRACTOR SHALL COORDINATE OTHER LAYDOWN AND STAGING AREAS WITH THE COUNTY.
3. ALL REQUIRED TEMPORARY EROSION AND SEDIMENT CONTROL MEASURES SHALL BE INSTALLED AND MAINTAINED BY THE CONTRACTOR. SEE REQUIREMENTS ON SHEET PR-101.
4. PROOF-ROLL ALL SLAB SUBGRADES PRIOR TO PLACEMENT OF STONE. METHOD TO BE DETERMINED BY ENGINEER.
5. SEE TYPICAL STONE PAVEMENT DETAIL THIS SHEET FOR ALL AREAS WITHIN FENCING LIMITS.
6. SEE DRAWING PR-103 FOR SLAB AND CONDUIT DETAILS.
7. MATERIALS:
   A. CONCRETE: f c = 5000 PSI MIX DESIGN WITH HIGH EARLY STRENGTH ADDITIVE. MIX TO BE APPROVED BY ENGINEER
   B. REINFORCING BARS: ASTM A615 GRADE 60, Fy = 60 KSI
8. PROVIDE CONCRETE WORK CONFORMING TO THE REQUIREMENTS OF ACI301-99, SPECIFICATIONS FOR STRUCTURAL CONCRETE.
9. PROVIDE 4-6% AIR ENTRAINMENT FOR ALL CONCRETE.
10. VERIFY SIZE AND LOCATION OF ALL OPENINGS, SLEEVES, CONDUITS OR OTHER INSERTS WITH OWNER'S SITE REPRESENTATIVE.
11. PROVIDE ¾ CHAMFER ON ALL EXPOSED CONCRETE CORNERS WHERE WORK OF OTHER TRADES IS NOT ATTACHED.

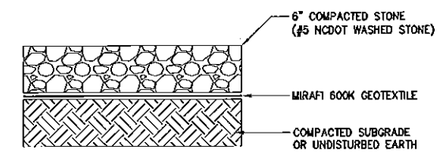


1 TYPICAL PAVEMENT DETAIL
GENERATOR FACILITY
NOT TO SCALE

| No. | Submittal / Revision | Appd | By | Date |
|---|---|---|---|---|
| 1 | BUILDING INSPECTION REVIEW | RCS | BSR | 12-2012 |

SURRY COUNTY, NORTH CAROLINA

NORTH CAROLINA PROFESSIONAL ENGINEER SEAL 030 12/18/12 ROBERT C. SALLICH

Drawing Copyright ©2011

CHA
8720 Red Oak Boulevard, Suite 500 - Charlotte, NC 28217-4535
Main: (704) 527-5227 - www.chacompanies.com

Designed: RCS | Drawn: BSR | Checked: RCS

LANDFILL GAS TO ENERGY PROJECT

FOUNDATION PLAN AND DETAILS

Issue Date: 01-2013 | Project No.: 22177 | Scale: AS SHOWN

**PR-102**

File: I:\DWG\SURRY COUNTY, NC\LFGTE CONTRACT DRAWINGS\22177_PR-102.DWG
Saved: 1/14/2013 4:50:37 PM Plotted: 1/14/2013 4:51:07 PM User: Rowe, Brad LastSavedBy: 4148

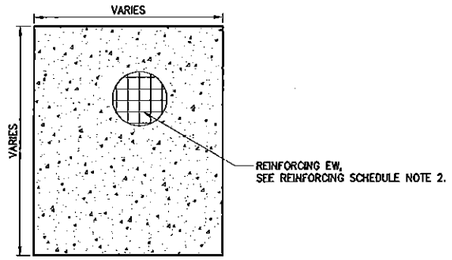


## TYPICAL SLAB PLAN
NOT TO SCALE

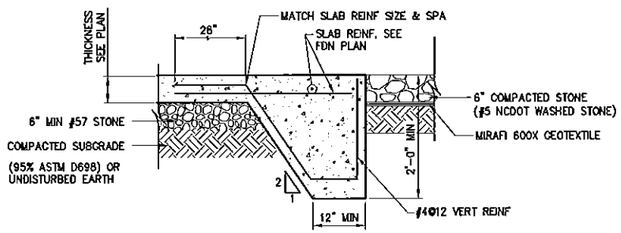


## 1 TYPICAL TURNED DOWN SLAB DETAIL
NOT TO SCALE

NOTES:

1. SEE PLAN SHEET LAYOUT FOR REQUIRED SLAB THICKNESS.
2. REINFORCING SCHEDULE: 6" THICK SLABS – #4 @ 10" EW
   8" THICK SLABS – #5 @ 10" EW

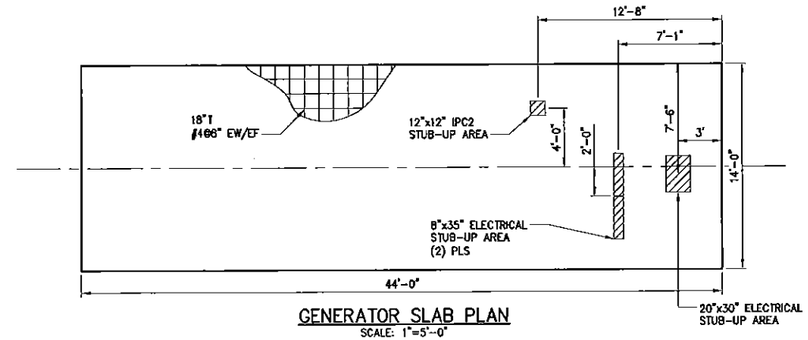


## GENERATOR SLAB PLAN
SCALE: 1"=5'-0"
(SEE GENERATOR CONDUIT PLAN BELOW)

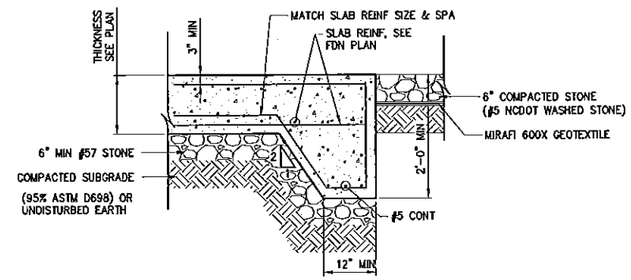


## 2 GENERATOR TURNED DOWN SLAB DETAIL
NOT TO SCALE

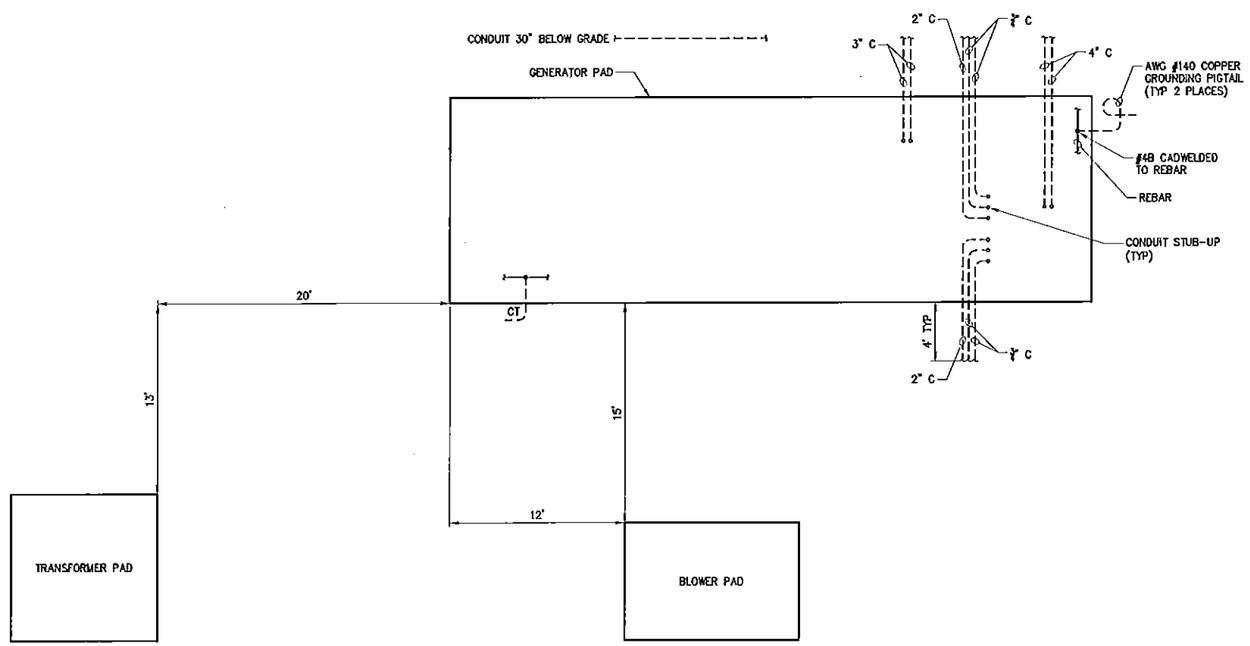


## GENERATOR CONDUIT PLAN
SCALE: 1"=5'-0"

| No. | Submittal / Revision | Appd | By | Date |
|---|---|---|---|---|
| 1 | BUILDING INSPECTION REVIEW | RCS | BSR | 12-2012 |

SURRY COUNTY, NORTH CAROLINA

NORTH CAROLINA PROFESSIONAL ENGINEER SEAL 5310 RICHARD C. MILLS

NORTH CAROLINA PROFESSIONAL ENGINEER SEAL 20360 12/6/12 ROBERT C. SALLACH

Drawing Copyright © 2011

CHA
8723 Red Oak Boulevard, Suite 303 · Charlotte, NC 28217-4608
Main: (704) 527-7227 · www.chaenergy@aol.com

Designed: RCS | Drawn: BSR | Checked: RCS

LANDFILL GAS TO ENERGY PROJECT

FOUNDATION DETAILS

Issue Date: 01-2013 | Project No.: 22177 | Scale: AS SHOWN

**PR-103**

File: I:\DWG\SURRY COUNTY, NC\LFGTE CONTRACT DRAWINGS\22177_PR-103.DWG
Saved: 12/20/2012 11:32:39 AM Plotted: 1/14/2013 4:52:35 PM User: Rowe, Brad (aalSomedBy: 414B

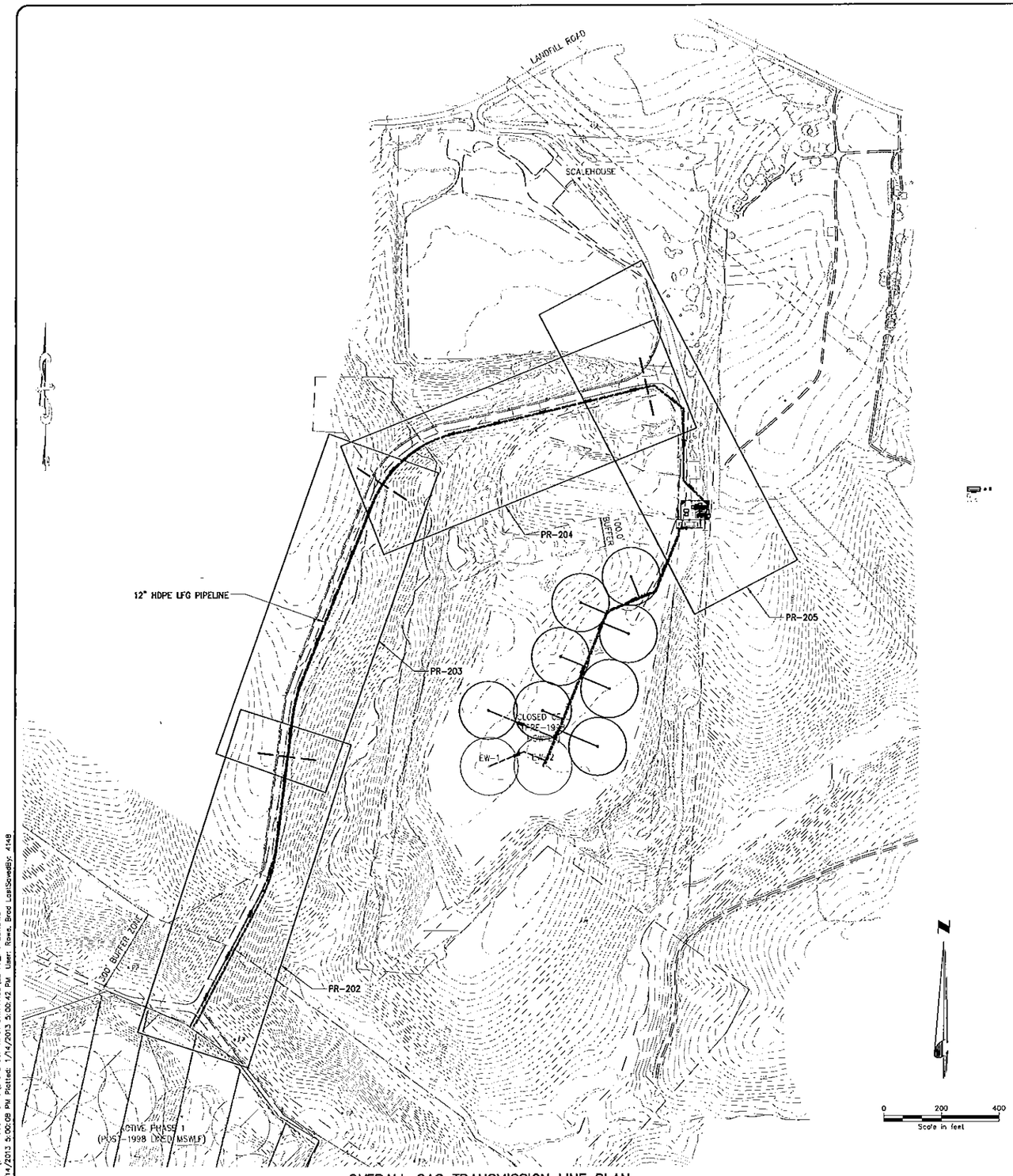


OVERALL GAS TRANSMISSION LINE PLAN
SCALE: 1"=200'-0"

## INDEX OF DRAWINGS – TRANSMISSION LINE PACKAGE

| DRAWING NO. | TITLE |
|---|---|
| PR-201 | OVERALL GAS TRANSMISSION LINE PLAN |
| PR-202 | GAS TRANSMISSION LINE PLAN AND PROFILE |
| PR-203 | GAS TRANSMISSION LINE PLAN AND PROFILE |
| PR-204 | GAS TRANSMISSION LINE PLAN AND PROFILE |
| PR-205 | GAS TRANSMISSION LINE PLAN AND PROFILE |

## LEGEND

PROPOSED GAS TRANSMISSION MAIN — — — GAS — — —
EXISTING GAS LINE — — — GAS — — —
EXISTING FORCEMAIN — — — FM — — —

## PROJECT INFORMATION

SITE LOCATION: 237 LANDFILL ROAD
MT. AIRY, NORTH CAROLINA

OWNER: BARNABAS INVESTMENT GROUP, LLC

OWNER'S REPRESENTATIVE: GEORGE IRWIN
PETRA ENGINEERING, INC.
PHONE: 704-965-7918
EMAIL: girwin@petraeng.com

## GENERAL NOTES:

1. CONTRACTOR SHALL FIELD VERIFY ALL EXISTING SITE CONDITIONS PRIOR TO COMMENCING WORK AND SHALL IMMEDIATELY NOTIFY OWNER OF ANY DISCREPANCIES.
2. CONTRACTOR SHALL CONFINE ALL CONSTRUCTION ACTIVITIES ASSOCIATED WITH OR INCIDENTAL TO THE WORK SPECIFIED AND SHOWN AS PART OF THIS PROJECT TO THOSE AREAS WITHIN THE LIMITS OF CONSTRUCTION UNLESS OTHERWISE APPROVED BY OWNER.
3. CONTRACTOR SHALL BE SOLELY RESPONSIBLE FOR SITE SAFETY AND FOR COMPLIANCE WITH ALL FEDERAL, STATE AND LOCAL HEALTH AND SAFETY CODES, LAWS, REGULATIONS AND ORDINANCES INCLUDING, BUT NOT LIMITED TO THE OCCUPATIONAL SAFETY AND HEALTH ADMINISTRATION (OSHA).
4. CONTRACTOR SHALL RESTORE ALL AREAS DISTURBED BY CONSTRUCTION, INCLUDING ACCESS AND SITE ROADWAYS, DITCHES, DRAINAGE STRUCTURES AND OTHER EXISTING FEATURES TO THEIR ORIGINAL CONDITION OR TO A CONDITION SATISFACTORY TO OWNER.
5. ALL REQUIRED TEMPORARY EROSION AND SEDIMENT CONTROL MEASURES SHALL BE INSTALLED AND MAINTAINED BY THE CONTRACTOR IN ACCORDANCE WITH THE APPROVED SEDIMENT AND EROSION CONTROL PLAN.
6. CONTRACTOR SHALL OBTAIN ALL REQUIRED PERMITS AND PAY ALL FEES OF SUCH PRIOR TO COMMENCING ANY WORK.
7. CONTRACTOR SHALL BE RESPONSIBLE FOR THE STAKING AND LAYOUT OF ALL WORK.
8. CONTRACTOR SHALL CONFIRM ALL CONNECTIONS AND TIE-POINTS OF PROPOSED WORK WITH EXISTING AND PROPOSED FACILITIES INCLUDING ALL STRUCTURAL, MECHANICAL, PLUMBING, HVAC, AND ELECTRICAL SYSTEMS.
9. CONTRACTOR SHALL BE RESPONSIBLE TO PROVIDE ALL LABOR, TEMPORARY WORK AND UTILITY SERVICES.
10. CONTINUOUS OPERATION OF THE EXISTING LANDFILL AND RECYCLING SYSTEMS TO BE MAINTAINED DURING CONSTRUCTION AND INSTALLATION OF THE PROPOSED LFGTE PROJECT COMPONENTS.
11. ACCESS TO ALL EXISTING COUNTY SOLID WASTE MANAGEMENT AND MAINTENANCE FACILITIES LOCATED AT THE SITE MUST BE MAINTAINED IN A MANOR SUITABLE FOR PUBLIC USE AND SAFETY.

| No. | Submittal / Revision | App'd | By | Date |
|---|---|---|---|---|
| | | | | |

SURRY COUNTY, NORTH CAROLINA

NORTH CAROLINA PROFESSIONAL ENGINEER SEAL 22390 01/14/13 ROBERT C. SALLACH

Drawing Copyright © 2011

CHA
8720 Red Oak Boulevard, Suite 505 · Charlotte, NC 28217-4538
Main: (704) 527-5227 · www.chaenvironmental.com

Designed: RCS | Drawn: BSR | Checked: RCS

LANDFILL GAS TO ENERGY PROJECT

OVERALL GAS TRANSMISSION LINE PLAN

Issue Date: 01-2013 | Project No.: 22177 | Scale: AS SHOWN

PR-201

File: I:\DWG\SURRY COUNTY, NC\LFGTE CONTRACT DRAWINGS\22177_PR-201.DWG
Saved: 1/14/2013 5:06:08 PM Plotted: 1/14/2013 5:00:42 PM User: Rowe, Brad LastSavedBy: 4148

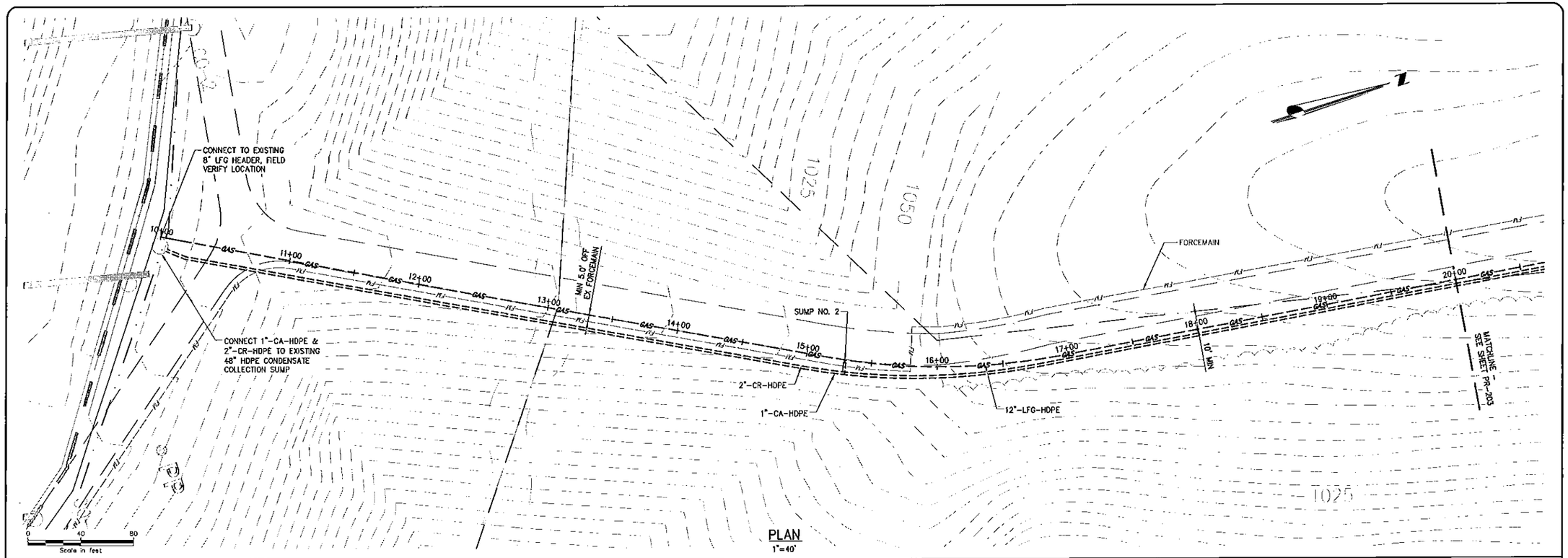


PLAN
1"=40'

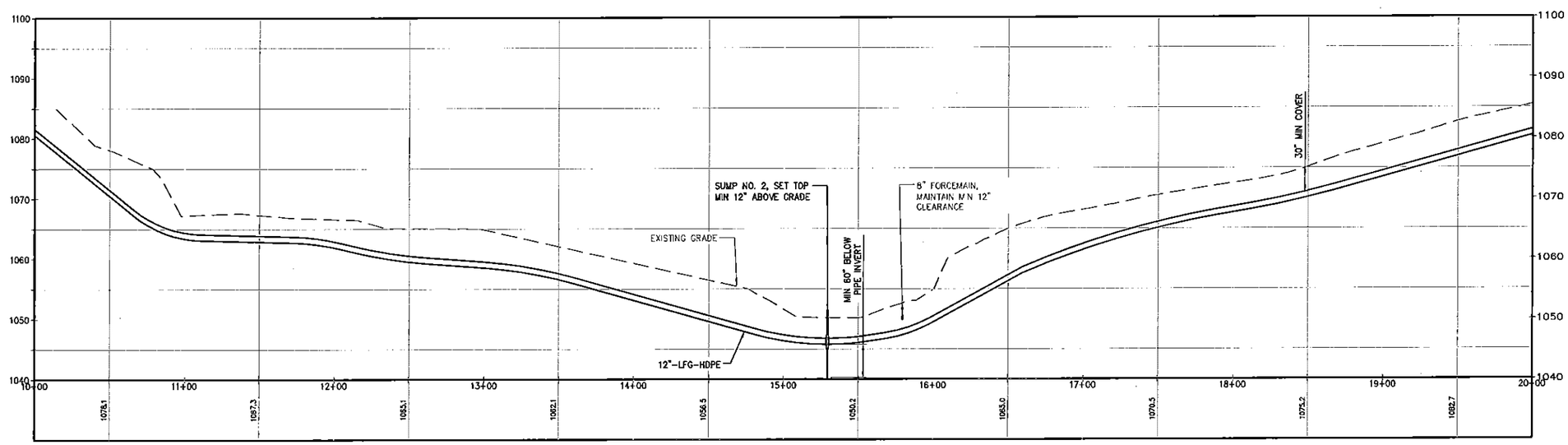


PROFILE
H: 1"=40', V: 1"=10'

File: I:\DWG\SURRY COUNTY, NC\LFGTE CONTRACT DRAWINGS\22177_PR-202.DWG
Saved: 1/7/2013 3:31:02 PM Plotted: 1/14/2013 3:02:45 PM User: Rowe, Brad LastSavedBy: 4148

| No. | Submittal / Revision | App'd | By | Date |
|---|---|---|---|---|
| | | | | |

SURRY COUNTY, NORTH CAROLINA

NORTH CAROLINA PROFESSIONAL ENGINEER SEAL 025330 01/14/13 ROBERT C. SALLACK

Drawing Copyright © 2011

CHA
8720 Red Oak Boulevard, Suite 300 - Charlotte, NC 28217-4208
Main: (704) 527-3227 - www.chacompanies.com

Designed: RCS | Drawn: BSR | Checked: RCS

LANDFILL GAS TO ENERGY PROJECT

GAS TRANSMISSION LINE PLAN AND PROFILE

Issue Date: 01-2013 | Project No.: 22177 | Scale: AS SHOWN

PR-202

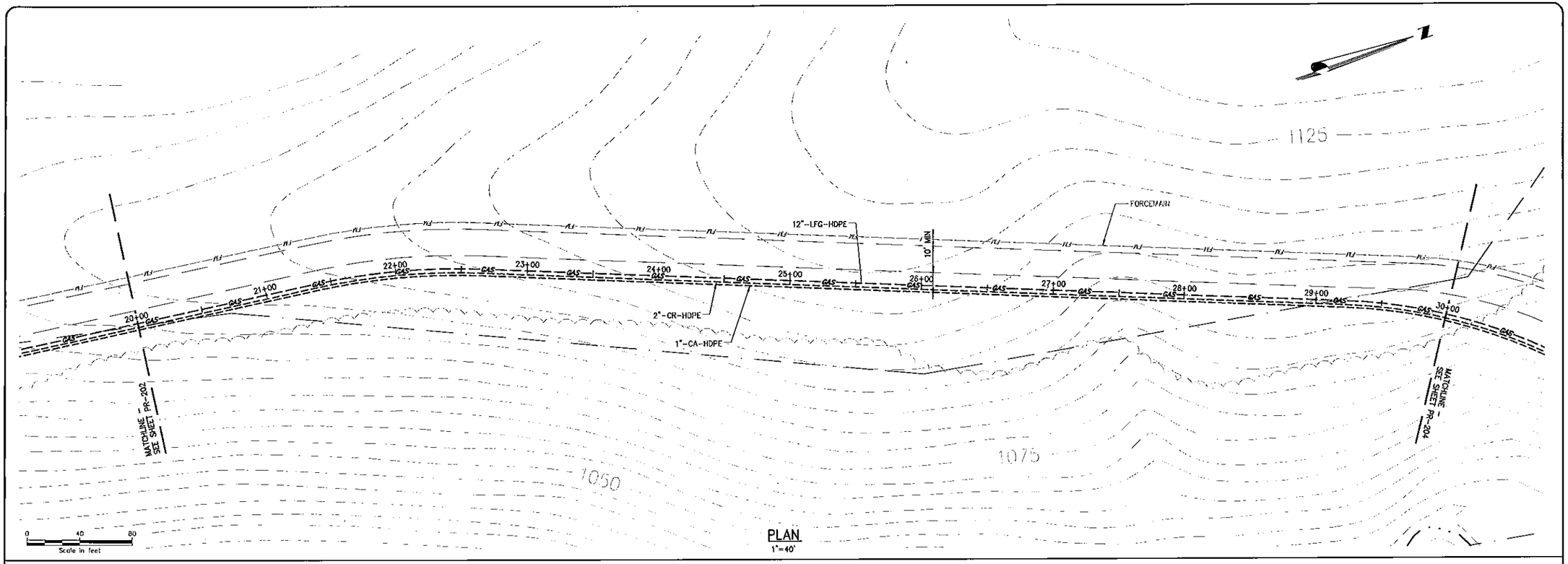


PLAN
1"=40'

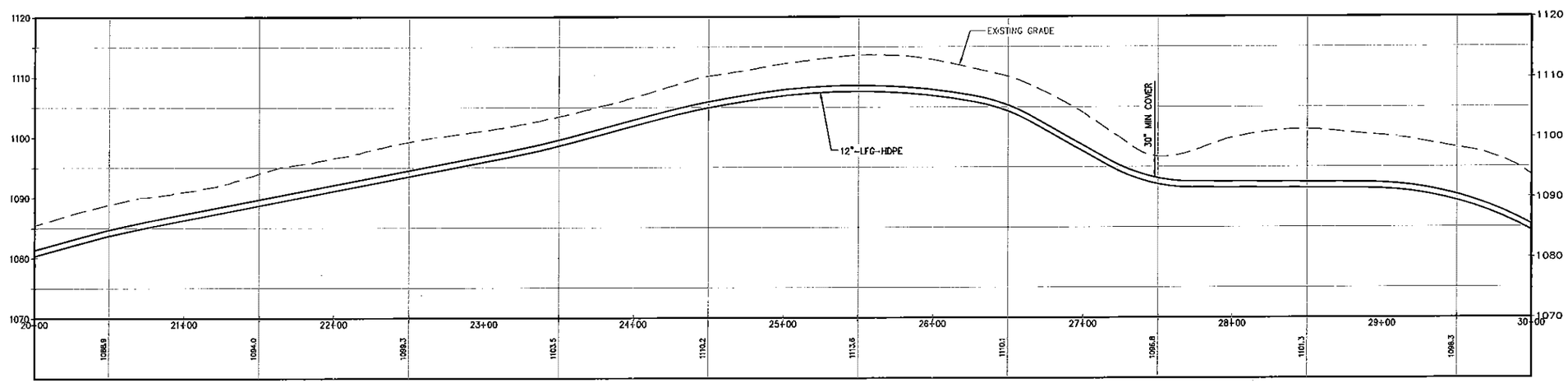


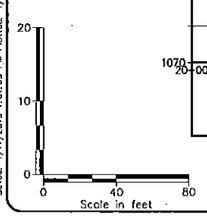


PROFILE
H: 1"=40', V: 1"=10'

| No. | Submittal / Revision | Appd | By | Date |
|---|---|---|---|---|
| | | | | |

SURRY COUNTY, NORTH CAROLINA

NORTH CAROLINA PROFESSIONAL ENGINEER SEAL 030390 ROBERT C. SALLICH 01/16/13

Drawing Copyright © 2011

CHA
8720 Red Oak Boulevard, Suite 505 - Charlotte, NC 28217-4038
Main: (704) 527-3227 - www.chacompanies.com

Designed: XXX | Drawn: XXX | Checked: XXX

LANDFILL GAS TO ENERGY PROJECT

GAS TRANSMISSION LINE PLAN AND PROFILE

Issue Date: 01-2013 | Project No.: 22177 | Scale: AS SHOWN

# PR-203

File: I:\DWG\SURRY COUNTY, NC\LFGTE CONTRACT DRAWINGS\22177_PR-203.DWG
Saved: 1/11/2013 11:01:03 PM Plotted: 1/14/2013 5:04:26 PM User: Rowe, Brad LastSavedBy: 4145

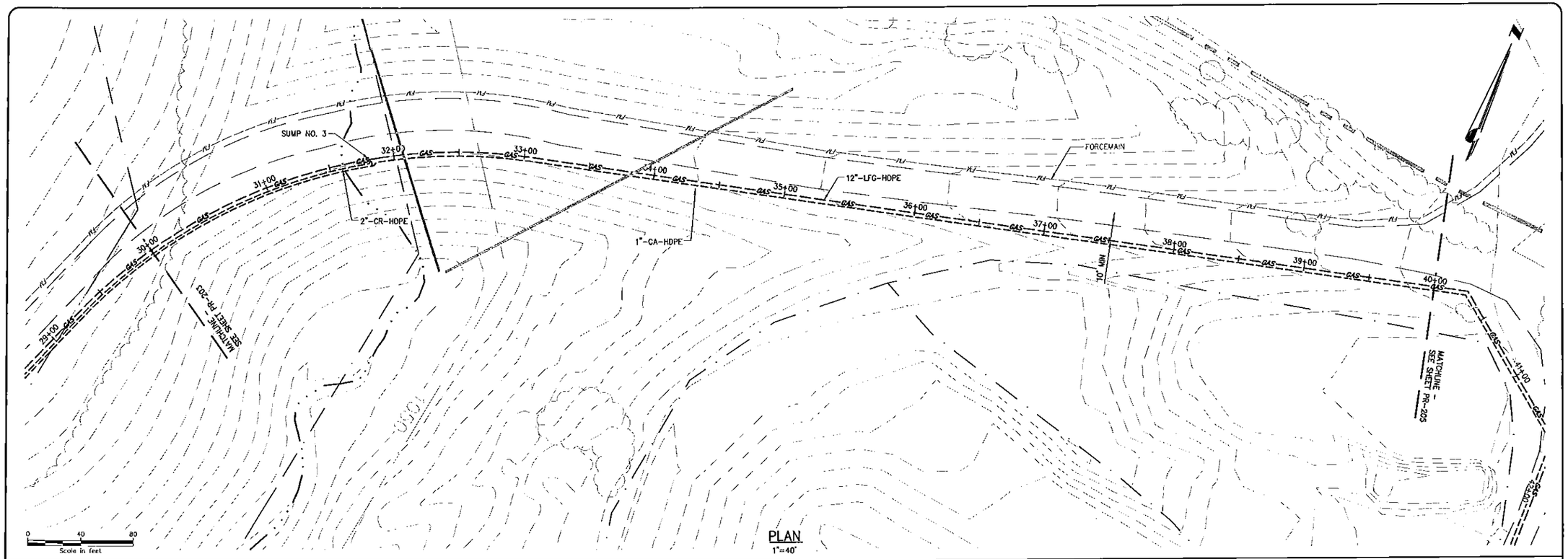


PLAN
1"=40'

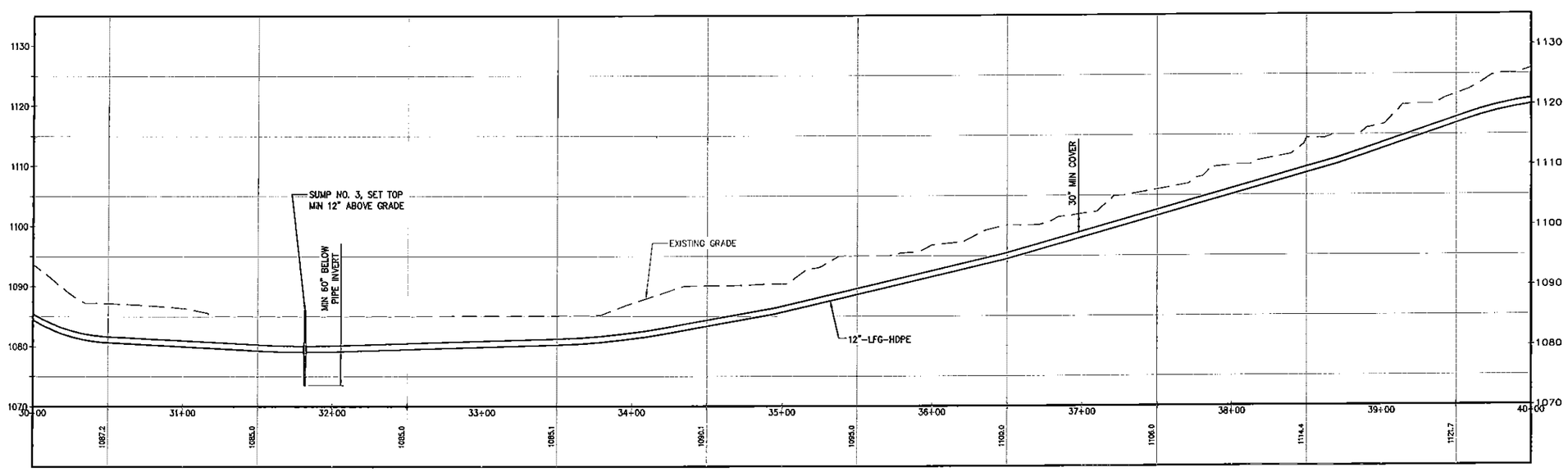


PROFILE
H: 1"=40', V: 1"=10'

| No. | Submittal / Revision | App'd | By | Date |
|---|---|---|---|---|
| | | | | |

SURRY COUNTY, NORTH CAROLINA

NORTH CAROLINA PROFESSIONAL SEAL 019390 ENGINEER ROBERT C. SALLECH 07/4/13

Drawing Copyright © 2011

CHA
8720 Red Oak Boulevard, Suite 306 - Charlotte, NC 28217-4038
Main: (704) 527-7227 - www.chacompanies.com

Designed: RCS | Drawn: BSR | Checked: RCS

LANDFILL GAS TO ENERGY PROJECT

GAS TRANSMISSION LINE PLAN AND PROFILE

Issue Date: 01-2013 | Project No.: 22177 | Scale: AS SHOWN

PR-204

File: I:\DWG\SURRY COUNTY, NC\LFGTE CONTRACT DRAWINGS\22177_PR-204.DWG
Saved: 1/7/2013 3:31:05 PM Plotted: 1/14/2013 5:06:04 PM User: Rowe, Brad LastSavedBy: 4149

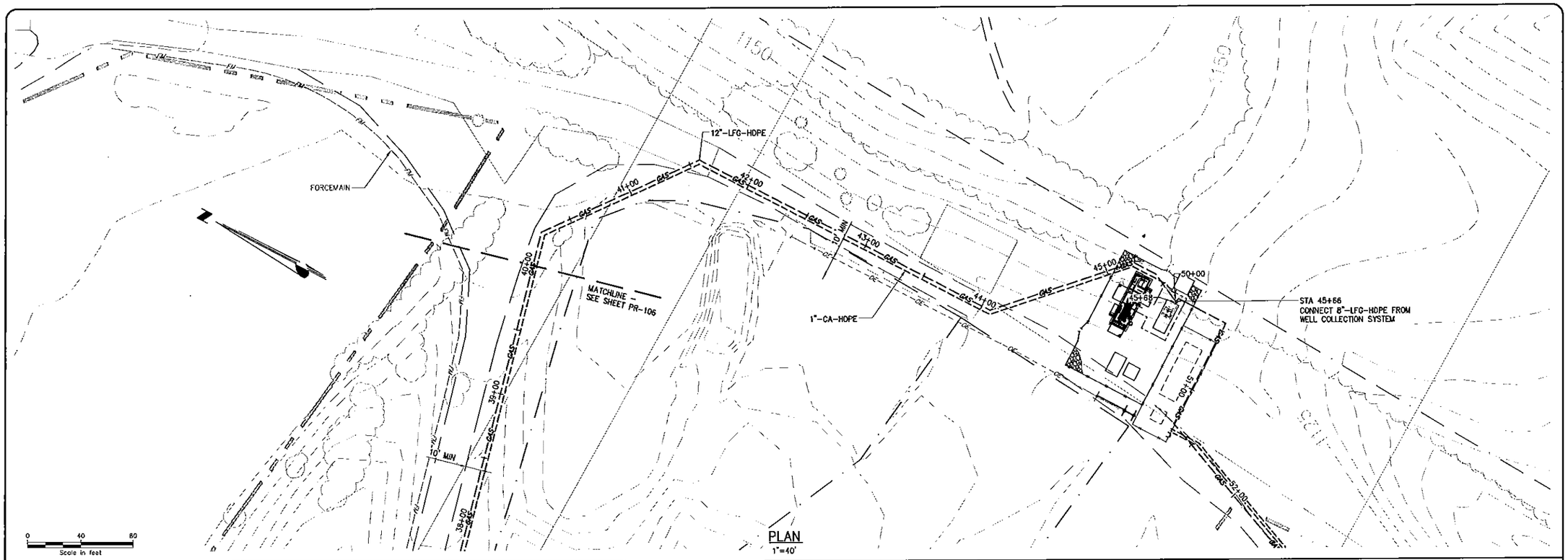


PLAN
1"=40'

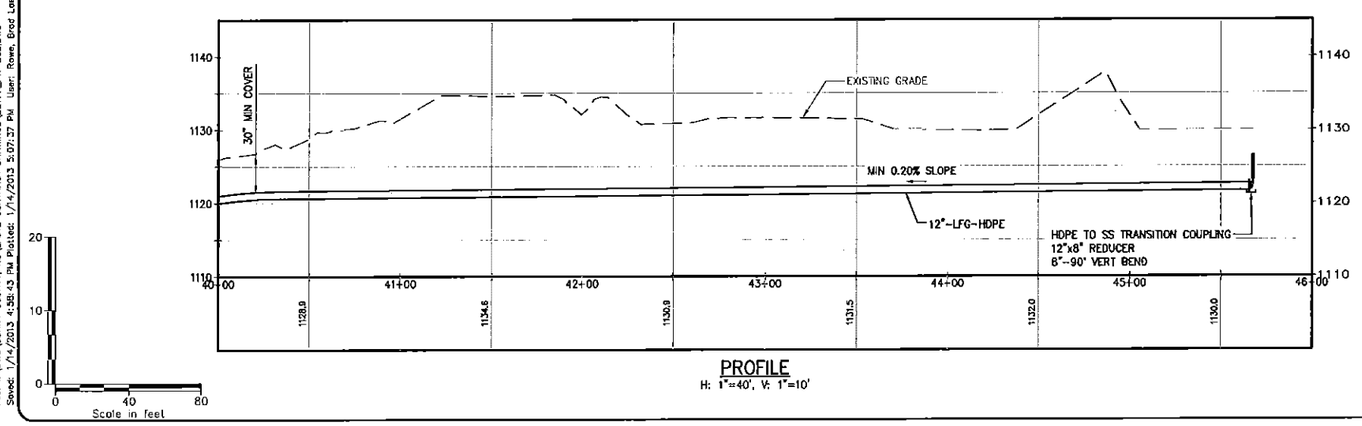


PROFILE
H: 1"=40', V: 1"=10'

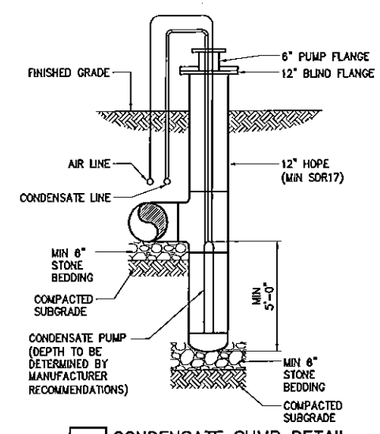


1 CONDENSATE SUMP DETAIL
SCALE: 1/2"=1'-0"

| No. | Submittal / Revision | Appd | By | Date |
|---|---|---|---|---|
| | | | | |

SURRY COUNTY, NORTH CAROLINA

Drawing Copyright © 2011

CHA
8720 Red Oak Boulevard, Suite 505 - Charlotte, NC 28217-4928
Main: (704) 527-5277 - www.chacompanies.com

Designed: RCS | Drawn: BSR | Checked: RCS

LANDFILL GAS TO
ENERGY PROJECT

GAS TRANSMISSION LINE
PLAN AND PROFILE

Issue Date: 01-2013 | Project No.: 22177 | Scale: AS SHOWN

PR-205

File: I:\DWG\SURRY COUNTY, NC\LFGTE CONTRACT DRAWINGS\22177_PR-225.DWG
Saved: 1/14/2013 4:38:43 PM Plotted: 1/14/2013 5:07:37 PM User: Rowe, Brad LastSavedBy: 4148

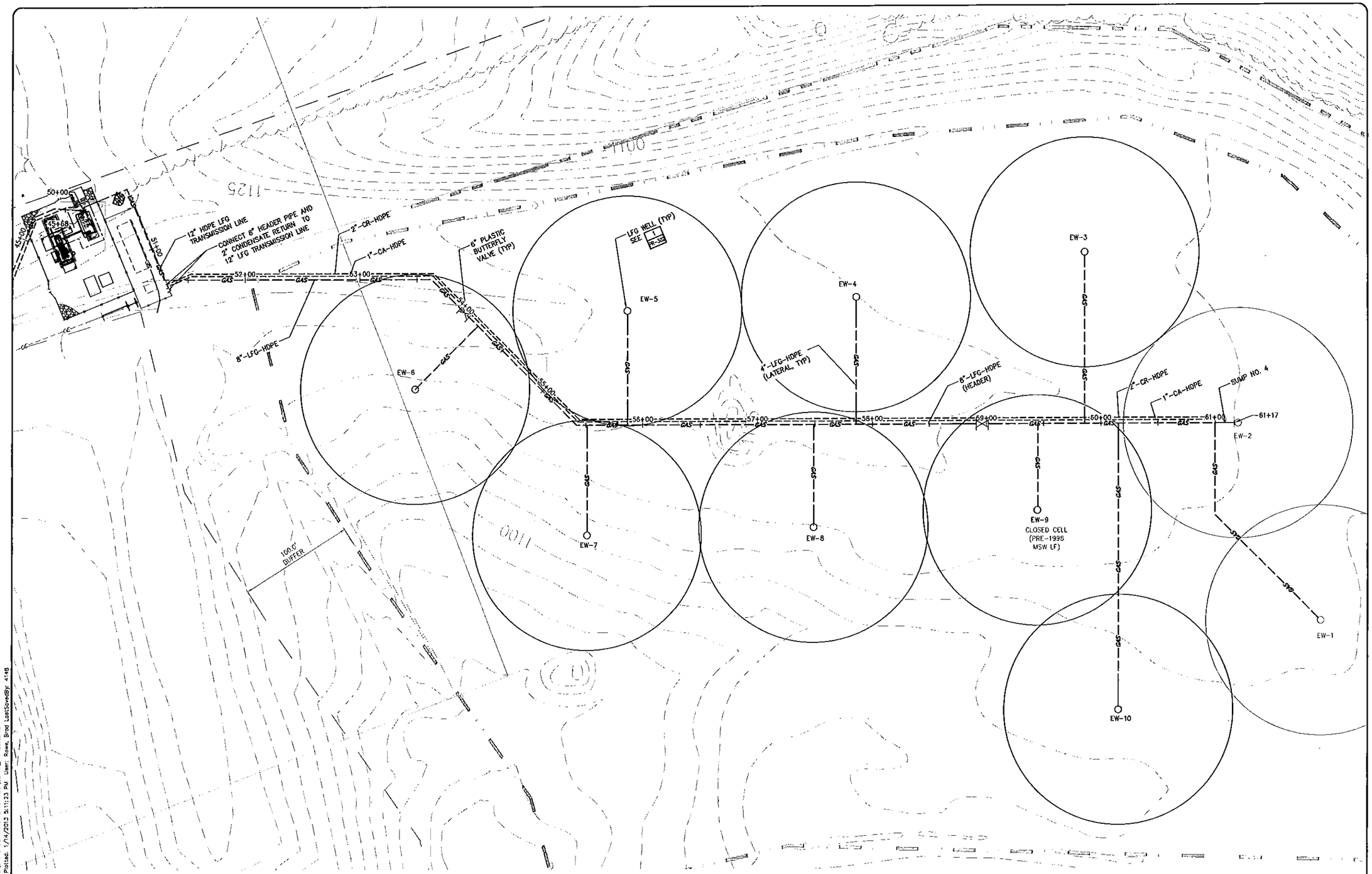


LFG COLLECTION SYSTEM PLAN
SCALE: 1"=50'

| No. | Submittal / Revision | App'd | by | Date |
|---|---|---|---|---|
| | | | | |

SURRY COUNTY, NORTH CAROLINA

NORTH CAROLINA PROFESSIONAL SEAL 022390 ENGINEER ROBERT C. SALLICK 2/14/13

Drawing Copyright © 2011

CHA
8720 Red Oak Boulevard, Suite 505 · Charlotte, NC 28217-4938
Main: (704) 527-5227 · www.chacompanies.com

Designed: RCS | Drawn: BSR | Checked: RCS

LANDFILL GAS TO ENERGY PROJECT

LFG COLLECTION SYSTEM PLAN

Issue Date: 01-2013 | Project No.: 22177 | Scale: AS SHOWN

PR-301

File: I:\DWG\SURRY COUNTY, NC\LFGTE CONTRACT DRAWINGS\22177_PR-301.DWG
Saved: 1/14/2013 2:14:21 PM Plotted: 1/14/2013 5:11:23 PM User: Rowe, Brad LastSavedBy: 4148

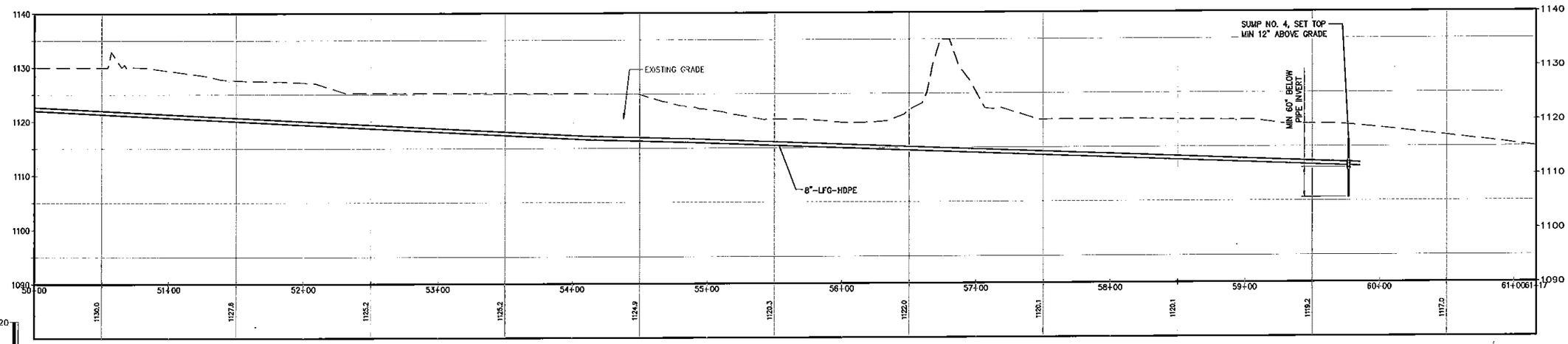


PROFILE
H: 1"=40', V: 1"=10'

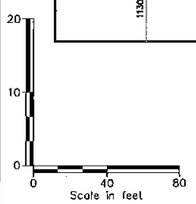


| No. | Submittal / Revision | Appd. | By | Date |
|---|---|---|---|---|
| | | | | |

SURRY COUNTY, NORTH CAROLINA

Drawing Copyright © 2011

CHA
8720 Red Oak Boulevard, Suite 555 - Charlotte, NC 28217-4928
Main: (704) 377-3277 - www.chacompanies.com

Designed: RCS | Drawn: BSR | Checked: RCS

LANDFILL GAS TO
ENERGY PROJECT

LFG COLLECTION SYSTEM PROFILE

Issue Date: 01-2013 | Project No.: 22177 | Scale: AS SHOWN

**PR-302**

File: I:\DWG\SURRY COUNTY, NC\LFGTE CONTRACT DRAWINGS\22177_PR-302.DWG
Saved: 1/14/2013 3:13:09 PM Plotted: 1/14/2013 3:13:38 PM User: Rowe, Brad LastSavedBy: 4148

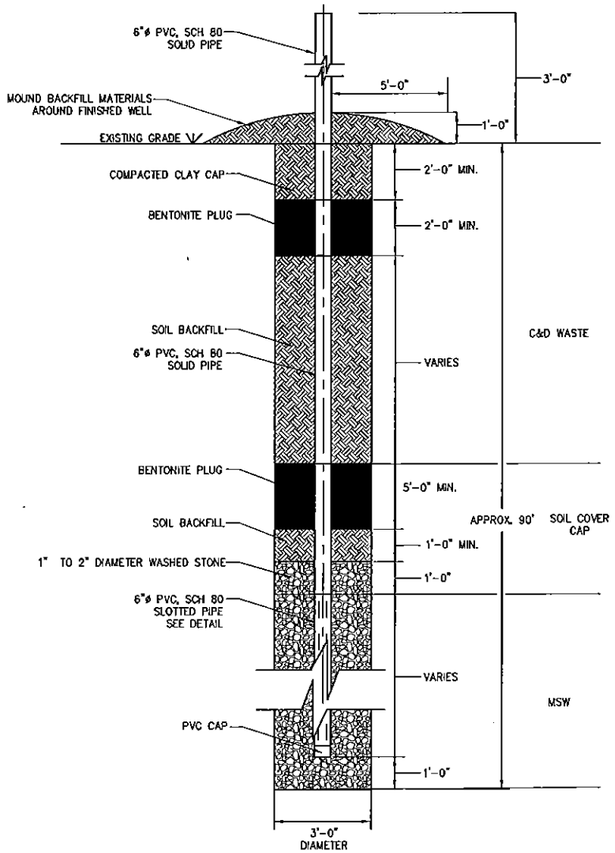


NOTES:

1. SOIL BACKFILL SHALL BE PLACED AND COMPACTED IN 8-12 IN LIFTS USING A METHOD APPROVED BY ENGINEER.
2. WELL BORING DEPTH WILL BE ADJUSTED IN FIELD AS REQUIRED.
3. WELLS SHALL BE BORED TO BOTTOM OF WASTE AND SHALL BE BACKFILLED WITH PELLETIZED BENTONITE UP 5' FROM THE BOTTOM OF THE BOREHOLE.
4. TEST WELL EW-1 LOCATED IN THE CLOSED MSW UNIT.

1 GAS WELL DETAIL
PR-302 NOT TO SCALE

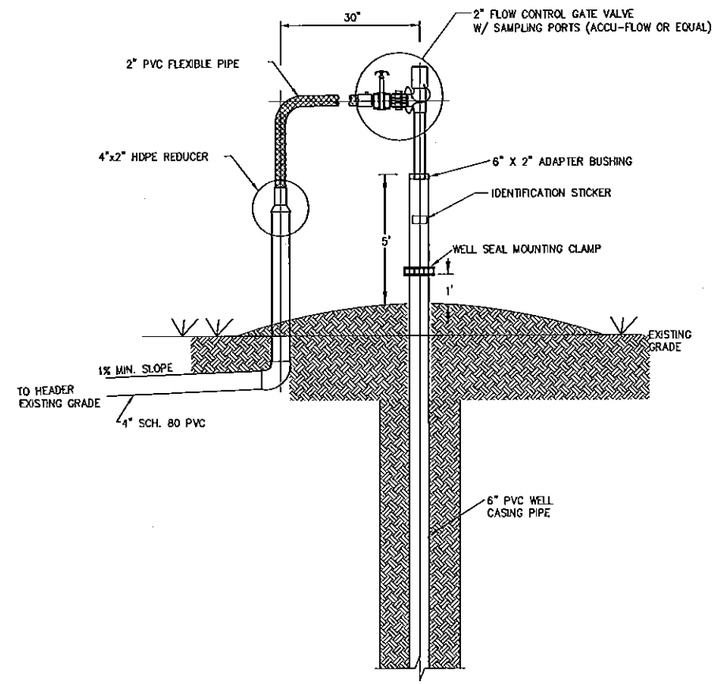


NOTES:

1. RESTORE ALL AREAS DISTURBED DURING CONSTRUCTION.

2 TYPICAL WELLHEAD ASSEMBLY AND PIPING DETAIL
NOT TO SCALE

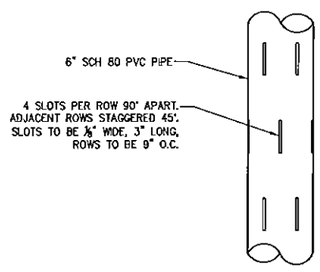


3 SLOTTED PIPE DETAIL
NOT TO SCALE

| No. | Submittal / Revision | Appd. | By | Date |
|---|---|---|---|---|

SURRY COUNTY, NORTH CAROLINA

NORTH CAROLINA PROFESSIONAL SEAL 24930 ENGINEER ROBERT C. BALLICH

Drawing Copyright © 2014
CHA
8720 Red Oak Boulevard, Suite 555 - Charlotte, NC 28217-4539
Main: (704) 527-0277 - www.chacompanies.com

Designed: RCS | Drawn: BSR | Checked: RCS

LANDFILL GAS TO ENERGY PROJECT

DETAILS

Issue Date: 01-2013 | Project No.: 22177 | Scale: AS SHOWN

PR-303

File: I:\DWG\SURRY COUNTY, NC\LFGTE CONTRACT DRAWINGS\22177_PR-303.DWG
Saved: 1/11/2013 12:50:53 PM Plotted: 1/14/2013 5:15:10 PM User: Rowe, Brad LastSavedBy: 4148

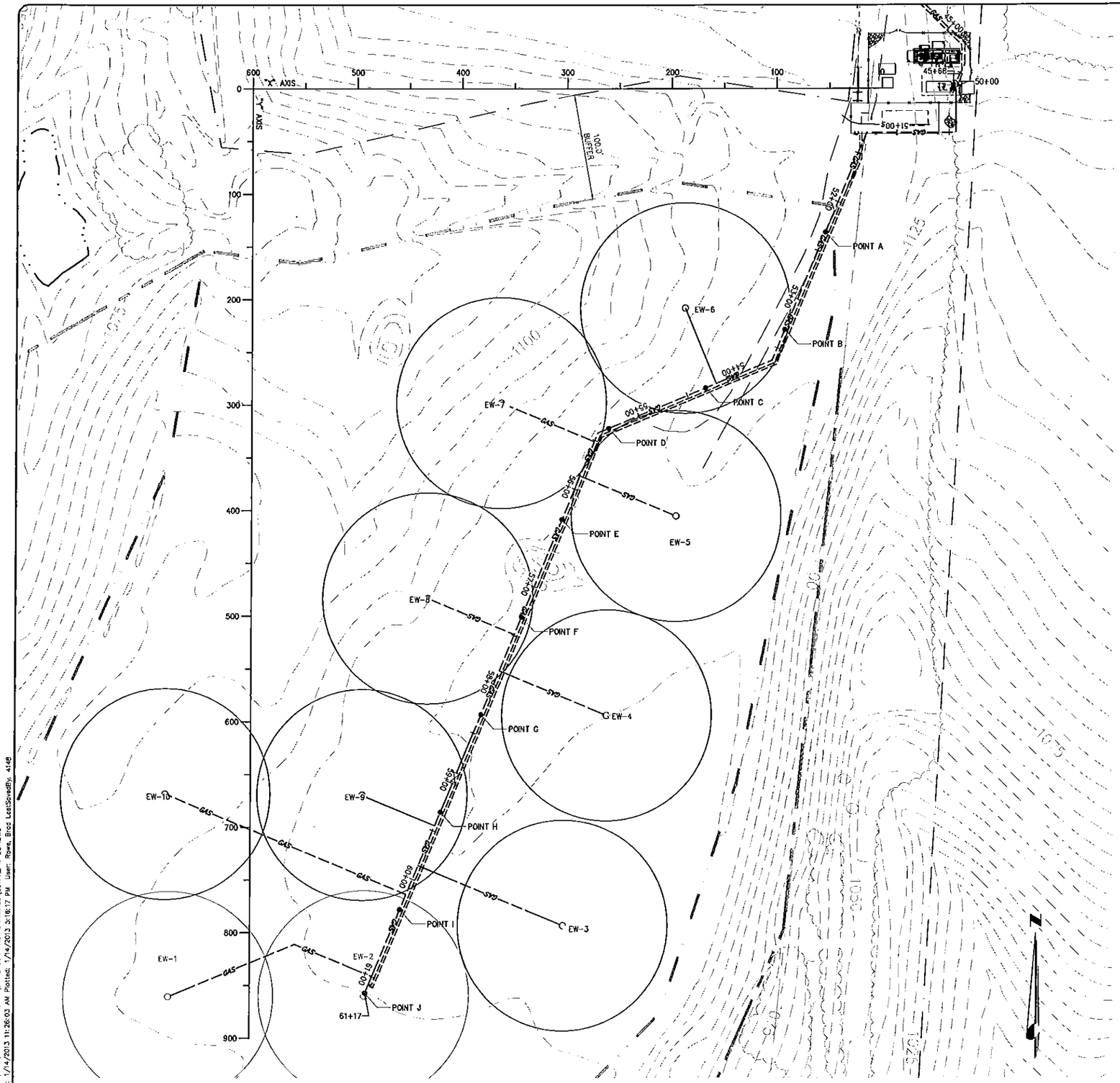


COLLECTION SYSTEM PLAN
SCALE: 1"=50'-0"

| COLLECTION SYSTEM FIELD TIES | | |
|---|---|---|
| POINT NO. | "X" | "Y" |
| A | 54.1' | 136.1' |
| B | 92.3' | 228.5' |
| C | 167.7' | 283.8' |
| D | 260.0' | 322.1' |
| E | 304.4' | 408.4' |
| F | 342.7' | 500.8' |
| G | 380.9' | 593.2' |
| H | 419.2' | 685.6' |
| I | 457.5' | 778.0' |
| J | 490.3' | 857.2' |

| No. | Submittal / Revision | App'd | By | Date |
|---|---|---|---|---|
| | | | | |

SURRY COUNTY, NORTH CAROLINA

Drawing Copyright © 2011

CHA
8720 Red Oak Boulevard, Suite 608 - Charlotte, NC 28217-4039
Main: (704) 527-7227 - www.chacompanies.com

Designed: RCS | Drawn: BSR | Checked: RCS

LANDFILL GAS TO ENERGY PROJECT

GAS COLLECTION SYSTEM ELEVATION GRID

Issue Date: 01-2013 | Project No.: 22177 | Scale: AS SHOWN

PR-304

File: I:\DWG\SURRY COUNTY, NC\LFGTE CONTRACT DRAWINGS\22177_PR-304.DWG
Saved: 1/14/2013 11:26:03 AM Plotted: 1/14/2013 3:16:17 PM User: Rowe, Brad LastSavedBy: 4148

## INDEX OF DRAWINGS – MECHANICAL AND ELECTRICAL PACKAGE


| DRAWING NO. | TITLE |
|---|---|
| PR-401 | PROCESS AND INSTRUMENTATION DIAGRAM |
| PR-402 | GENSET LAYOUT PLAN |
| PR-403 | ELECTRICAL SITE PLAN |
| PR-404 | ELECTRICAL ONE LINE DIAGRAMS AND DETAILS |
| PR-405 | ELECTRICAL SCHEDULES |


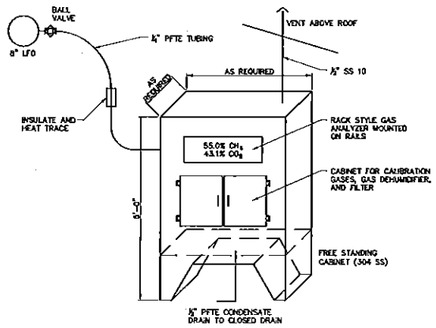


1 GAS ANALYZER DETAIL
NOT TO SCALE

## PROJECT INFORMATION

SITE LOCATION: 237 LANDFILL ROAD
MT. AIRY, NORTH CAROLINA

OWNER: BARNABAS INVESTMENT GROUP, LLC

OWNER'S REPRESENTATIVE: GEORGE IRWIN
PETRA ENGINEERING, INC.
PHONE: 704-965-7918
EMAIL: girwin@petraeng.com

## GENERAL NOTES:

1. CONTRACTOR SHALL FIELD VERIFY ALL EXISTING SITE CONDITIONS PRIOR TO COMMENCING WORK AND SHALL IMMEDIATELY NOTIFY OWNER OF ANY DISCREPANCIES.
2. CONTRACTOR SHALL CONFINE ALL CONSTRUCTION ACTIVITIES ASSOCIATED WITH OR INCIDENTAL TO THE WORK SPECIFIED AND SHOWN AS PART OF THIS PROJECT TO THOSE AREAS WITHIN THE LIMITS OF CONSTRUCTION UNLESS OTHERWISE APPROVED BY OWNER.
3. CONTRACTOR SHALL BE SOLELY RESPONSIBLE FOR SITE SAFETY AND FOR COMPLIANCE WITH ALL FEDERAL, STATE AND LOCAL HEALTH AND SAFETY CODES, LAWS, REGULATIONS AND ORDINANCES INCLUDING, BUT NOT LIMITED TO THE OCCUPATIONAL SAFETY AND HEALTH ADMINISTRATION (OSHA).
4. CONTRACTOR SHALL RESTORE ALL AREAS DISTURBED BY CONSTRUCTION, INCLUDING ACCESS AND SITE ROADWAYS, DITCHES, DRAINAGE STRUCTURES AND OTHER EXISTING FEATURES TO THEIR ORIGINAL CONDITION OR TO A CONDITION SATISFACTORY TO OWNER.
5. ALL REQUIRED TEMPORARY EROSION AND SEDIMENT CONTROL MEASURES SHALL BE INSTALLED AND MAINTAINED BY THE CONTRACTOR IN ACCORDANCE WITH THE APPROVED SEDIMENT AND EROSION CONTROL PLAN.
6. CONTRACTOR SHALL OBTAIN ALL REQUIRED PERMITS AND PAY ALL FEES OF SUCH PRIOR TO COMMENCING ANY WORK.
7. CONTRACTOR SHALL BE RESPONSIBLE FOR THE STAKING AND LAYOUT OF ALL WORK.
8. CONTRACTOR SHALL CONFIRM ALL CONNECTIONS AND TIE-POINTS OF PROPOSED WORK WITH EXISTING AND PROPOSED FACILITIES INCLUDING ALL STRUCTURAL, MECHANICAL, PLUMBING, HVAC, AND ELECTRICAL SYSTEMS.
9. CONTRACTOR SHALL BE RESPONSIBLE TO PROVIDE ALL LABOR, TEMPORARY WORK AND UTILITY SERVICES.
10. CONTINUOUS OPERATION OF THE EXISTING LANDFILL AND RECYCLING SYSTEMS TO BE MAINTAINED DURING CONSTRUCTION AND INSTALLATION OF THE PROPOSED LFGTE PROJECT COMPONENTS.
11. ACCESS TO ALL EXISTING COUNTY SOLID WASTE MANAGEMENT AND MAINTENANCE FACILITIES LOCATED AT THE SITE MUST BE MAINTAINED IN A MANOR SUITABLE FOR PUBLIC USE AND SAFETY.

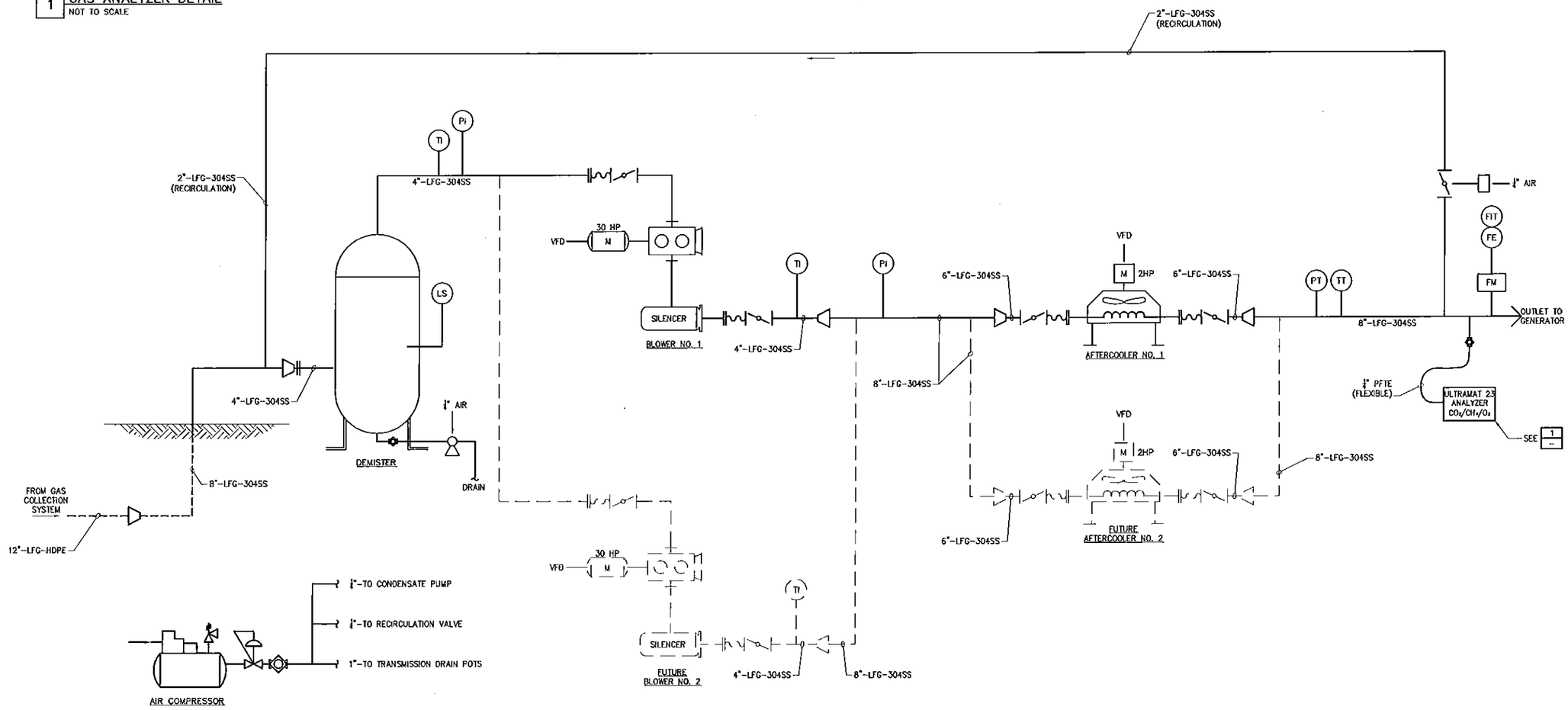


SYSTEM P&ID
NOT TO SCALE

| No. | Submittal / Revision | App'd | By | Date |
|---|---|---|---|---|
| | | | | |

SURRY COUNTY, NORTH CAROLINA

NORTH CAROLINA PROFESSIONAL ENGINEER SEAL 22812 ROBERT C. BALLARD


CHA
6720 Rea Oak Boulevard, Suite 105B · Charlotte, NC 28217-4539
Main: (704) 377-5277 · www.chaconsultants.com


Drawing Copyright © 2011

Designed: RCS | Drawn: BSR | Checked: RCS

LANDFILL GAS TO ENERGY PROJECT

PROCESS AND INSTRUMENTATION DIAGRAM

Issue Date: 01-2013 | Project No.: 22177 | Scale: AS SHOWN

PR-401

File: I:\DWG\SURRY COUNTY, NC\LFGTE CONTRACT DRAWINGS\22177_PR-401.DWG
Saved: 12/31/2012 2:57:29 PM Plotted: 1/14/2013 2:17:41 PM User: Rowe, Brad LastSavedBy: 4148

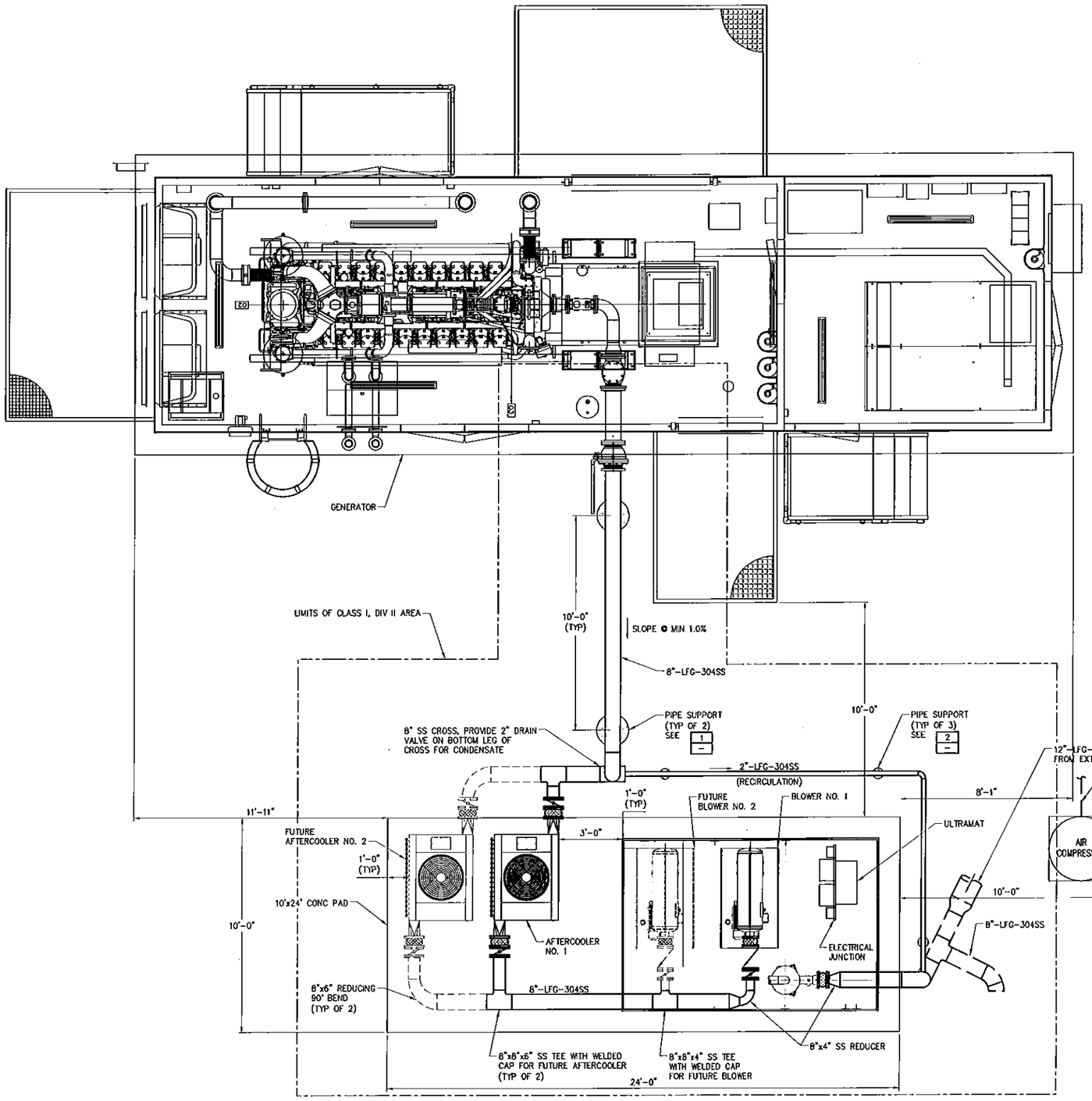


LAYOUT PLAN
SCALE: 3/8"=1'-0"

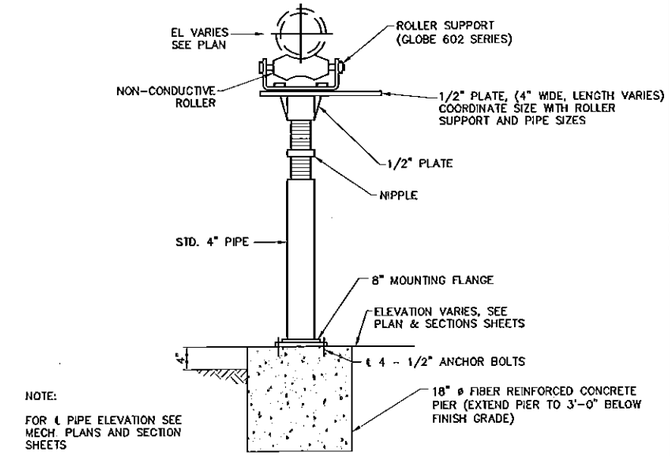


NOTE:

FOR ℄ PIPE ELEVATION SEE MECH PLANS AND SECTION SHEETS

1 METAL PIPE SUPPORT DETAIL
NOT TO SCALE

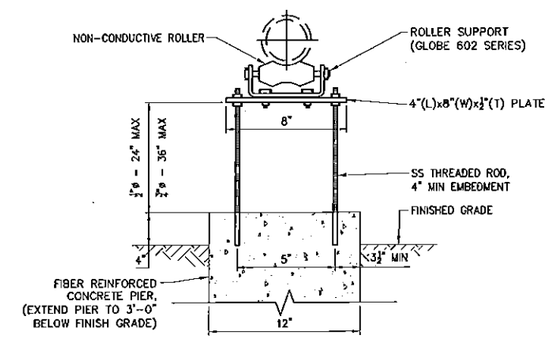


2 PIPE SUPPORT DETAIL
NOT TO SCALE

| No. | Submittal / Revision | Appd | By | Date |
|---|---|---|---|---|
| | | | | |

SURRY COUNTY, NORTH CAROLINA

NORTH CAROLINA PROFESSIONAL SEAL 22050 ENGINEER ROBERT C. SALLACH

Drawing Copyright © 2011

CHA
8720 Red Oak Boulevard, Suite 555 - Charlotte, NC 28217-4928
Main: (704) 527-2277 - www.chacompanies.com

Designed: RCS | Drawn: BSR | Checked: RCS

LANDFILL GAS TO ENERGY PROJECT

GENSET LAYOUT PLAN

Issue Date: 01-2013 | Project No.: 22177 | Scale: AS SHOWN

PR-402

File: I:\DWG\SURRY COUNTY, NC\LFGTE CONTRACT DRAWINGS\22177_PR-402.DWG
Saved: 1/14/2013 3:22:16 PM Plotted: 1/14/2013 3:23:52 PM User: Rowe, Brad LastSavedBy: 4148

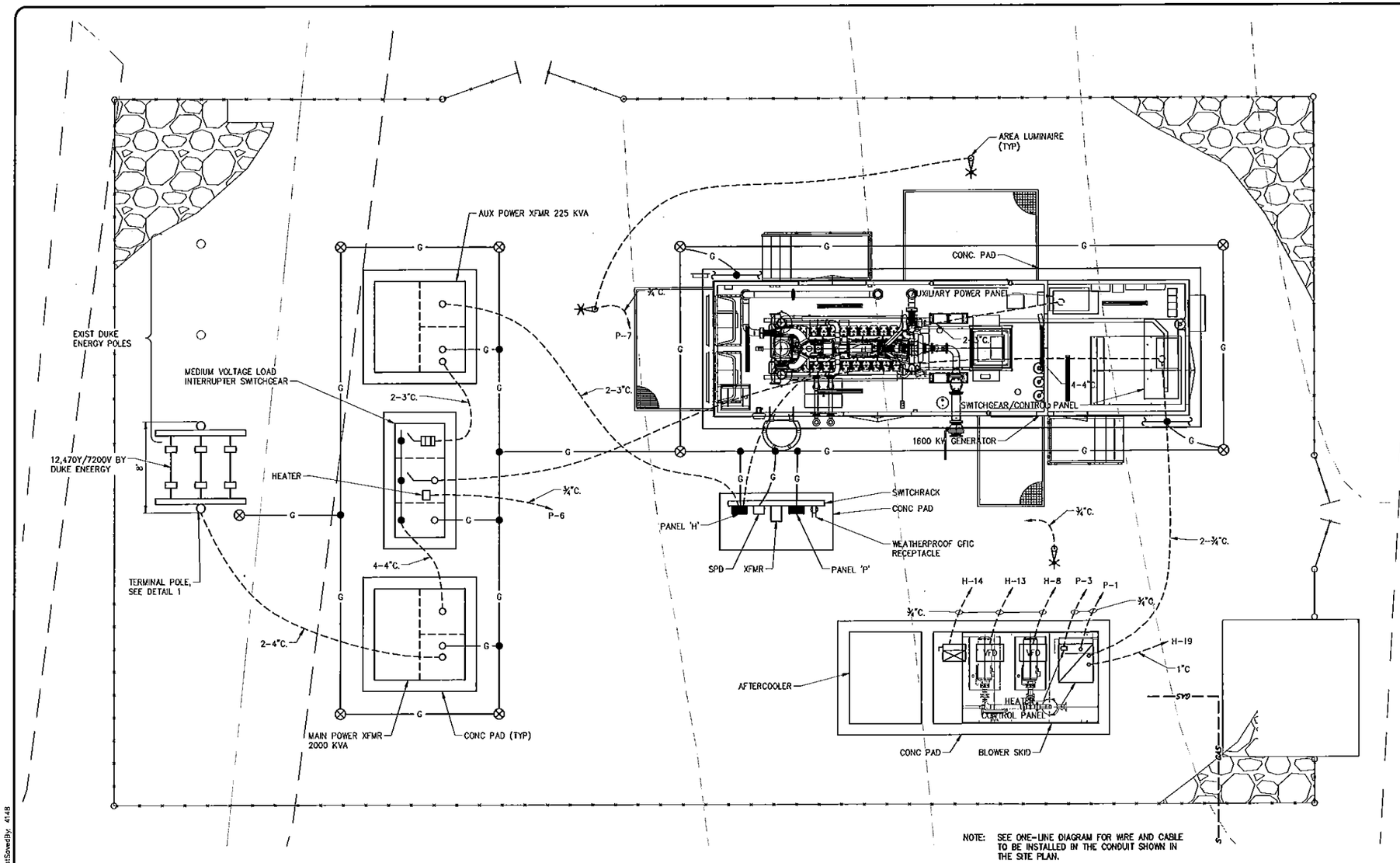


NOTE: SEE ONE-LINE DIAGRAM FOR WIRE AND CABLE TO BE INSTALLED IN THE CONDUIT SHOWN IN THE SITE PLAN.

## ELECTRICAL SITE PLAN

SCALE: 1"=5'-0"

ELECTRICAL LEGEND

- CONDUIT BELOW GRADE
- G — AWG#4/0 COPPER GROUND 30" BELOW GRADE
- HOME RUN TO PANEL
- 10FT x ¾" DIA COPPERWELD GROUND ROD
- CIRCUIT BREAKER PANELBOARD
- CONTROL PANEL
- FUSE
- FUSED CUTOUT, 13 KV
- AREA LUMINAIRE
- WEATHERPROOF RECEPTACLE
- VFD — VARIABLE FREQUENCY DRIVE IN NEMA 4X SST ENCLOSURE
- COMBINATION MOTOR STARTER, MAGNETIC, IN NEMA 4X SST ENCLOSURE
- 100/3 — MOLDED CASE CIRCUIT BREAKER, AMPS/NO. POLES INDICATED
- MEDIUM VOLTAGE CABLE TERMINATOR
- TRANSFORMER
- SPD — SURGE PROTECTIVE DEVICE
- EARTH GROUNDING ELECTRODE CONNECTION
- SST — STAINLESS STEEL
- NEU — NEUTRAL
- GND — GROUND
- XFMR — TRANSFORMER
- P — PANELBOARD 'P'
- H — PANELBOARD 'H'

NOTES:

1. ELECTRICAL EQUIPMENT, MATERIALS, AND INSTALLATION SHALL BE IN ACCORDANCE WITH THE LATEST VERSIONS OF THE NATIONAL ELECTRICAL CODE, AND THE NATIONAL ELECTRICAL SAFETY CODE.
2. EQUIPMENT AND MATERIAL SHALL BE UL LABELED.
3. EQUIPMENT GROUNDING SHALL BE CONTINUOUS AND SECURE USING SEPARATE COPPER, GREEN TW INSULATED, GROUND CONDUCTORS INSTALLED IN THE CONDUIT WITH THE CIRCUIT CONDUCTORS.
4. CONCRETE PAD SIZES SHOWN ARE APPROXIMATE. PADS SHALL BE SIZED FOR THE EQUIPMENT TO BE INSTALLED ON THE PAD. LEAVE 6 INCHES OF CONCRETE ALL AROUND THE EQUIPMENT.
5. SEAL AROUND THE CABLE AND WIRE EXITING STUBUPS FROM THE GROUND TO EXCLUDE THE MIGRATION OF LANDFILL GAS INTO THE EQUIPMENT. LIKEWISE, SEAL SPARE CONDUITS.
6. PROVIDE ELASTIMOLD ELBOWS WHERE REQUIRED FOR TRANSFORMER CONNECTIONS.
7. PANELBOARDS SHALL HAVE COPPER BUS WITH BOLT-ON CIRCUIT BREAKERS, AND WITH COPPER NEUTRAL BUS AND GROUND BUS.
8. AREA LUMINAIRES SHALL BE PHOTOCELL CONTROLLED 250 W HPS MOUNTED 25 FEET ABOVE GRADE ON TREATED CLASS 7 POLES.
9. THE SURGE PROTECTIVE DEVICE (SPD) SHALL BE EQUAL TO ADVANCED PROTECTION TECHNOLOGIES CAT. NO. TE4XGA4XSC.

| No. | Submittal / Revision | Appd | By | Date |
|---|---|---|---|---|
| 1 | BUILDING INSPECTION REVIEW | RCS | BSR | 12-2012 |

SURRY COUNTY, NORTH CAROLINA

NORTH CAROLINA PROFESSIONAL SEAL 19390 ENGINEER ROBERT C. BALLICH 12/18/12

NORTH CAROLINA PROFESSIONAL SEAL 6340 ENGINEER RICHARD C. MILLER 12/18/12

Drawing Copyright © 2011

CHA
9725 Red Oak Boulevard, Suite 505 • Charlotte, NC 28217-4639
Main: (704) 527-5227 • www.chacompanies.com

Designed: RM | Drawn: CDH | Checked: RCS

LANDFILL GAS TO ENERGY PROJECT

ELECTRICAL SITE PLAN

Issue Date: 12-2012 | Project No.: 22177 | Scale: AS SHOWN

PR-403

File: I:\DWG\SURRY COUNTY, NC\LFGTE CONTRACT DRAWINGS\22177_PR-403.DWG
Saved: 12/31/2012 11:36:41 AM Plotted: 12/31/2012 11:37:28 AM User: Rowe, Brad LastSaved By: 4148

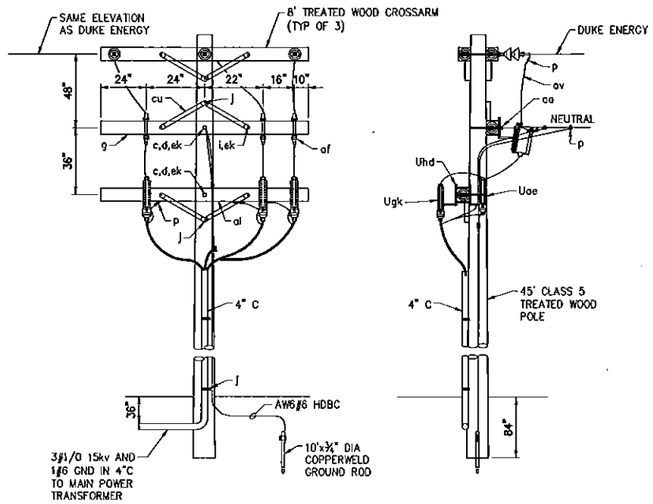


| ITEM | QTY. | MATERIAL |
|---|---|---|
| c | 2 | Bolt, machine, ⅝" x required length. |
| d | 2 | Washer, square 2¼" |
| g | 2 | Crossarm, 3½" x 4⅝" x 8'-0" |
| l | 4 | Bolt, carriage, ⅝" x 4½" |
| j | | Screw, lag ½" x 4" as required |
| p | | Connectors, as required |
| | | |
| aa | 1 | Eyenut, ⅝" |
| af | 3 | Cutout with 100A fuses |
| al | | Staples, as required |
| av | | Jumpers, as required |
| cu | 4 | Brace, wood, 28" |
| ek | 6 | Locknuts, as required |
| | | |
| Uae | 3 | Surge arrester |
| Ugc | 1 | Cable riser shield. Length as required. |
| Ugk | 3 | Cable termination. |
| Uhc | 3 | Cable support. |
| Uhd | 2 | Crossarm mounting bracket. |

NOTES:
1. TOTAL ARRESTER LEAD LENGTH MUST BE UNDER 3'.
2. NO BENDS PERMITTED WITHIN 6" OF CABLE TERMINAL BASE.
3. ALL MATERIALS SHALL BE AS LISTED IN PUBLICATION 202-1 "LIST OF MATERIALS ACCEPTABLE FOR USE ON SYSTEMS OF USDA RURAL DEVELOPMENT ELECTRICAL BORROWERS," JULY 2012

1 THREE PHASE CABLE TERMINAL POLE 12.47/7.2 kv
NOT TO SCALE

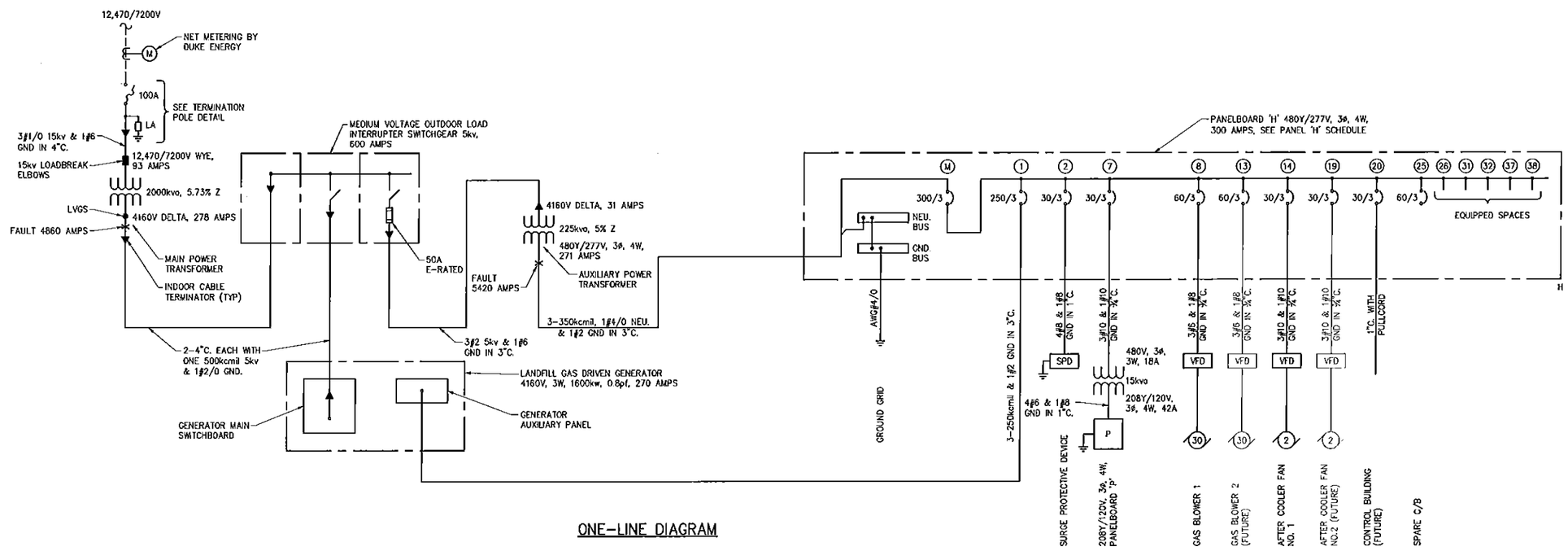


ONE-LINE DIAGRAM

| No. | Submittal / Revision | Appvd | By | Date |
|---|---|---|---|---|
| | | | | |

SURRY COUNTY, NORTH CAROLINA

NORTH CAROLINA PROFESSIONAL ENGINEER SEAL 5340 12/7/12 RICHARD C. MILLER

NORTH CAROLINA PROFESSIONAL ENGINEER SEAL 22690 12/7/12 ROBERT C. SALLACH

CHA
8729 Red Oak Boulevard, Suite 505 • Charlotte, NC 28217-4608
Main: (704) 527-6227 • www.chaconsultants.com

Drawing Copyright © 2011

Designed: RCM | Drawn: CDH | Checked: RCM

LANDFILL GAS TO ENERGY PROJECT

ELECTRICAL ONE LINE DIAGRAMS AND DETAILS

Issue Date: 12-2012 | Project No.: 22177 | Scale: AS SHOWN

PR-404

File: I:\DWG\SURRY COUNTY, NC\CFGTE CONTRACT DRAWINGS\22177_PR-404.DWG
Saved: 12/31/2012 10:34:50 AM Plotted: 12/31/2012 11:38:36 AM User: Rose, Brad LastSavedBy: 3771

PANEL DESIGNATION: H
VOLTAGE: 480Y/277V, 3ø, 4W
AMPERES: 300A

LOCATION: SWITCHRACK
MAIN: 300/3 MCB
PANEL MOUNTING: NEMA 3R

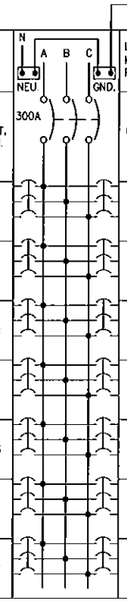


| LOAD SERVED | CONNECTED LOAD (KVA) A | B | C | CIRCUIT BREAKER AMPS | POLES | CKT. NO. | CKT. NO. | CIRCUIT BREAKER AMPS | POLES | CONNECTED LOAD (KVA) A | B | C | LOAD SERVED |
|---|---|---|---|---|---|---|---|---|---|---|---|---|---|
| GENERATOR AUXILIARY PANEL | 25 | 25 | 25 | 250 | 3 | 1 | 2 | 30 | 3 | - | - | - | SURGE PROTECTIVE DEVICE |
| PANEL 'P' VIA 15kva XFMR | 5 | 5 | 5 | 30 | 3 | 7 | 8 | 60 | 3 | 9 | 9 | 9 | GAS BLOWER NO. 1 |
| GAS BLOWER NO. 2 | 9 | 9 | 9 | 60 | 3 | 13 | 14 | 30 | 3 | 3 | 3 | 3 | AFTERCOOLER FAN |
| CHILLER | 4 | 4 | 4 | 40 | 3 | 19 | 20 | 60 | 3 | 5 | 5 | 5 | CONTROL BLDG (FUTURE) |
| SPARE | | | | 60 | 3 | 25 | 26 | | 3 | | | | EQUIPPED SPACE |
| EQUIPPED SPACE | | | | | 3 | 31 | 32 | | 3 | | | | EQUIPPED SPACE |
| EQUIPPED SPACE | | | | | 3 | 37 | 38 | | 3 | | | | EQUIPPED SPACE |
| SUB-TOTAL | 43 | 43 | 43 | | | | | | | 17 | 17 | 17 | SUB-TOTAL |

L1: 60 KVA
L2: 60 KVA
L3: 60 KVA

TOTAL CONNECTED LOAD= 180 KVA

INTERRUPTING RATING AT 480V VOLTS: 14,000 AMPS

PANEL DESIGNATION: P
VOLTAGE: 208Y/120V, 3ø, 4W
AMPERES: 60A

LOCATION: SWITCHRACK
MAIN: 60/3 MCB
PANEL MOUNTING: NEMA 3R

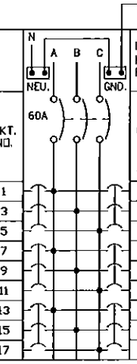


| LOAD SERVED | CONNECTED LOAD (KVA) A | B | C | CIRCUIT BREAKER AMPS | POLES | CKT. NO. | CKT. NO. | CIRCUIT BREAKER AMPS | POLES | CONNECTED LOAD (KVA) A | B | C | LOAD SERVED |
|---|---|---|---|---|---|---|---|---|---|---|---|---|---|
| BLOWER CONTROL PANEL | 1.2 | | | 20 | 1 | 1 | 2 | 20 | 1 | | | | SPARE |
| BLOWER PANEL HEATER | | 0.2 | | 20 | 1 | 3 | 4 | 20 | 1 | | | | SPARE |
| SPARE | | | | 20 | 1 | 5 | 6 | 20 | 1 | | | 0.2 | SWITCHGEAR HEATER |
| AREA LUMINAIRES | 0.6 | | | 20 | 1 | 7 | 8 | 20 | 1 | | | | SPARE |
| AREA LUMINAIERS | | 0.3 | | 20 | 1 | 9 | 10 | 20 | 1 | | | | SPARE |
| RECEPTACLE | | | 0.5 | 20 | 1 | 11 | 12 | 20 | 1 | | | | SPARE |
| EQUIPPED SPACE | | | | | 1 | 13 | 14 | | 1 | | | | EQUIPPED SPACE |
| EQUIPPED SPACE | | | | | 1 | 15 | 16 | | 1 | | | | EQUIPPED SPACE |
| EQUIPPED SPACE | | | | | 1 | 17 | 18 | | 1 | | | | EQUIPPED SPACE |
| SUB-TOTAL | 1.8 | 0.5 | 0.5 | | | | | | | 0.0 | 0.0 | 0.0 | SUB-TOTAL |

L1: 1.8 KVA
L2: 0.5 KVA
L3: 0.7 KVA

TOTAL CONNECTED LOAD= 2.0 KVA

INTERRUPTING RATING AT 240V VOLTS: 10,000 AMPS

NORTH CAROLINA PROFESSIONAL ENGINEER 5340 RICHARD C. MILLS JR.

NORTH CAROLINA PROFESSIONAL SEAL 0791 ENGINEER 12/19/12 ROBERT C. SALLACH

| No. | Submittal / Revision | Appd. | By | Date |
|---|---|---|---|---|
| | | | | |

SURRY COUNTY, NORTH CAROLINA

Drawing Copyright © 2011

CHA
8720 Red Oak Boulevard, Suite 505 - Charlotte, NC 28217-4308
Main: (704) 527-5027 • www.chacompanies.com

Designed: RCS | Drawn: BSR | Checked: RCS

LANDFILL GAS TO ENERGY PROJECT

ELECTRICAL SCHEDULES

Issue Date: 12-2012 | Project No.: 22177 | Scale: AS SHOWN

PR-405

File: I:\DWG\SURRY COUNTY, NC\LFGTE CONTRACT DRAWINGS\22177_PR-405.DWG
Saved: 12/31/2012 9:01:29 AM Plotted: 12/31/2012 11:39:32 AM User: Rowe, Brad LastSavedBy: 4148

# APPENDIX C

## Monitoring Forms

# MOUNT AIRY LANDFILL
# GAS WELL MONITORING LOG

DATE: _____

TECHNICIAN: _____

START TIME: _____

END TIME: _____

BAROMETRIC PRESSURE: _____

| Well No./Line Location | | | | |
|---|---|---|---|---|
| Temp (DegF) | | | | |
| $CH_4$ (%) | | | | |
| $CO_2$ (%) | | | | |
| $O_2$ (%) | | | | |
| Balance Gas (%) | | | | |
| System Vacuum (in w.c.) | | | | |
| Well Pressure (in w.c.) | | | | |
| Gas Flow Rate (scfm) | | | | |
| Valve Adjustment | | | | |
| Flow Rate Adjustment (scfm) | | | | |
| Vacuum Adjustment (in w.c.) | | | | |
| Water Level (feet): | | | | |

Comments:

_____

_____

_____

_____

_____

_____

_____

_____

_____

_____

_____

_____

# MOUNT AIRY LANDFILL
# WELL FIELD MAINTENANCE LOG

DATE: _____

SITE: _____

TECHNICIAN: _____

| Well ID | Maintenance Problem | Problem Repaired | | | Parts Needed | | Parts Needed? |
|---|---|---|---|---|---|---|---|
| | | Yes | No | Date | Yes | No | |
| | | | | | | | |
| | | | | | | | |
| | | | | | | | |
| | | | | | | | |
| | | | | | | | |
| | | | | | | | |
| | | | | | | | |
| | | | | | | | |
| | | | | | | | |
| | | | | | | | |
| | | | | | | | |
| | | | | | | | |
| | | | | | | | |
| | | | | | | | |
| | | | | | | | |
| | | | | | | | |
| | | | | | | | |
| | | | | | | | |
| | | | | | | | |
| | | | | | | | |

# MOUNT AIRY LANDFILL
# BLOWER STATION READINGS

BY: _____

TECHNICIAN: _____

MONTH: _____

| Date / Time | | | | |
|---|---|---|---|---|
| Inlet Sample | | | | |
| $CH_4$ (%) - GEM | | | | |
| $CO_2$ (%) - GEM | | | | |
| $O_2$ (%) - GEM | | | | |
| Balance Gas (%) - GEM | | | | |
| $CH_4$ (%) - Continuous Analyzer | | | | |
| $CO_2$ (%) - Continuous Analyzer | | | | |
| $O_2$ (%) - Continuous Analyzer | | | | |
| System Vacuum (in w.c.) | | | | |
| Flow (scfm) | | | | |
| Flow Total | | | | |
| Vacuum (inches w.c.) | | | | |
| Inlet Temperature (DegF) | | | | |
| Outlet Temperature (DegF) | | | | |
| Outlet Pressure (inches w.c.) | | | | |
| Current Blower in use (#) | | | | |
| VFD Setpoint (%) | | | | |
| Vac Control Setting | | | | |
| Flow Control Setting (if applicable) | | | | |
| Control Panel Alarm (yes/no) | | | | |
| Blower #____hours | | | | |
| Blower #____hours | | | | |
| Change Yokogawa Media Card? | | | | |
| Yokogawa recording? | | | | |
| Knock-Out Pot (KOP) and CS Storage Tank | | | | |
| KOP Differential Pressure (inches w.c.) | | | | |
| Compressor | | | | |
| Pressure (psi) | | | | |
| Oil Level | | | | |
| Current Run Hours | | | | |
| Service Warning Lights | | | | |

Comments:

_____

_____

_____

_____

# MOUNT AIRY LANDFILL
# SITE INSPECTION REPORT

DATE: _____

LOCATION: _____

TECHNICIAN: _____

| Cover & Vegetation | Yes | No | Comments |
|---|---|---|---|
| Settling of cap or depressions | | | |
| Erosion on cap system | | | |
| Erosion on sideslopes | | | |
| Ponding of water on cap | | | |
| Surface cracking | | | |
| Dead vegetation | | | |
| Acceptable vegetation | | | |
| Waste limit interface separation | | | |
| Exposed waste | | | |

| REPAIR AREAS | | | |
|---|---|---|---|
| GPS Coordinates | | Date of Repair | Comments |
| Northing | Easting | | |
| | | | |
| | | | |
| | | | |
| | | | |
| | | | |
| | | | |
| | | | |
| | | | |
| | | | |
| | | | |
| | | | |
| | | | |
| | | | |
| | | | |
| | | | |
| | | | |
| | | | |
| | | | |
| | | | |
| | | | |
| | | | |
| | | | |

# APPENDIX D

## Air Permit

NCDENR
North Carolina Department of Environment and Natural Resources
**Division of Air Quality**

Beverly Eaves Perdue
Governor

Sheila C. Holman
Director

Dee Freeman
Secretary

December 13, 2012

Dennis Bledsoe
Interim Public Works Director
Surry County Landfill
P.O. Box 342
Dobson, NC 27017

Subject: Air Permit No. 10275R00
Surry County Landfill
Mount Airy, Surry County, North Carolina
Permit Class: Small
Facility ID# 8600170

Dear Mr. Bledsoe:

In accordance with your completed application received December 3, 2012, we are forwarding herewith Permit No. 10275R00 to Surry County Landfill, Mount Airy, Surry County, North Carolina for the construction and operation of air emissions sources or air cleaning devices and appurtenances. Additionally, any emissions activities determined from your air permit application as meeting the exemption requirements contained in 15A NCAC 2Q .0102 have been listed for information purposes as an "ATTACHMENT" to the enclosed air permit. Please note the records retention requirements are contained in General Condition 2 of the General Conditions and Limitations.

If any parts, requirements, or limitations contained in this permit are unacceptable to you, you have the right to request a formal adjudicatory hearing within 30 days following receipt of this permit, identifying the specific issues to be contested. Such a request will stay the effectiveness of the entire permit. This hearing request must be in the form of a written petition, conforming to G.S. 150B-23 of the North Carolina General Statutes, and filed with the Office of Administrative Hearings, 6714 Mail Service Center, Raleigh, NC 27699-6714. The form for requesting a formal adjudicatory hearing may be obtained upon request from the Office of Administrative Hearings. Unless a request for a hearing is made pursuant to G.S. 150B-23, this air permit shall be final and binding.

You may request modification of your air permit through informal means pursuant to G.S. 150B-22. This request must be submitted in writing to the Director and must identify the specific

provisions or issues for which the modification is sought. Please note that the permit will become final and binding regardless of a request for informal modification unless a request for a hearing is also made under G.S. 150B-23.

Unless exempted by a condition of this permit or the regulations, construction of new air pollution sources or air cleaning devices, or modifications to the sources or air cleaning devices described in this permit must be covered under a permit issued by the Division of Air Quality prior to construction. Failure to do so is a violation of G.S. 143-215.108 and may subject the Permittee to civil or criminal penalties as described in G.S. 143-215.114A and 143-215.114B.

For PSD increment tracking purposes, $NO_x$ emissions due to this new permit are increased by 2.46 pounds per hour.

This permit shall be effective from December 13, 2012 until November 30, 2017, is nontransferable to future owners and operators, and shall be subject to the conditions and limitations as specified therein.

The Permittee is responsible for carefully reading the entire permit and evaluating the requirements of each permit stipulation. The Permittee shall comply with all terms, conditions, requirements, limitations and restrictions set forth in this permit. Noncompliance with any permit condition is grounds for enforcement action, for permit termination, revocation and reissuance, or modification, or for denial of a permit renewal application.

The facility's landfill gas-fired engine-generator set (1,600 ekW; 2,233 bhp) (ID No. ES-01) is subject to 40 CFR Part 60, Subpart JJJJ - Standards of Performance for Stationary Spark Ignition Internal Combustion Engines (please see Permit Condition A.5). Additional information on this federal rule may be found on the EPA's web site at http://www.epa.gov/ttn/atw/nsps/sinsps/sinspspg.html or on the DAQ's web site at http://www.ncair.org/permits/insig/. Hard copies will be provided by the regional office upon request.

Should you have any questions concerning this matter, please contact Christopher W. Lewter, P.E. at (336) 771-5000.

Sincerely,

Margaret A. Love

Margaret A. Love, P.E.
Regional Air Quality Supervisor

CWL
Enclosures

c: Winston-Salem Regional Office
Connie Horne, Cover letter only

NORTH CAROLINA ENVIRONMENTAL MANAGEMENT COMMISSION

DEPARTMENT OF ENVIRONMENT AND NATURAL RESOURCES

DIVISION OF AIR QUALITY

**AIR PERMIT NO. 10275R00**

Issue Date: December 13, 2012 | Effective Date: December 13, 2012
Expiration Date: November 30, 2017 | Replaces Permit: (new)

---

To construct and operate air emission source(s) and/or air cleaning device(s), and for the discharge of the associated air contaminants into the atmosphere in accordance with the provisions of Article 21B of Chapter 143, General Statutes of North Carolina (NCGS) as amended, and other applicable Laws, Rules and Regulations,

Surry County Landfill
237 Landfill Road
Mount Airy, Surry County, North Carolina
Permit Class: Small
Facility ID# 8600170

(the Permittee) is hereby authorized to construct and operate the air emissions sources and/or air cleaning devices and appurtenances described below:

| Emissions Source ID | Emissions Source Description | Control System ID | Control System Description |
|---|---|---|---|
| ES-01 (*NSPS JJJJ & NESHAP ZZZZ*) | Landfill gas-fired engine-generator set (1,600 ekW; 2,233 bhp) | N/A | N/A |

in accordance with the completed application 8600170.12A received December 3, 2012 including any plans, specifications, previous applications, and other supporting data, all of which are filed with the Department of Environment and Natural Resources, Division of Air Quality (DAQ) and are incorporated as part of this permit.

This permit is subject to the following specified conditions and limitations including any TESTING, REPORTING, OR MONITORING REQUIREMENTS:

## A. SPECIFIC CONDITIONS AND LIMITATIONS

1. Any air emission sources or control devices authorized to construct and operate above must be operated and maintained in accordance with the provisions contained herein. The Permittee shall comply with applicable Environmental Management Commission Regulations, including Title 15A North Carolina Administrative Code (NCAC), Subchapter 2D .0202, 2D .0516, 2D .0521, 2D .0524 (40 CFR Part 60, Subpart JJJJ), 2D .0535, 2D .0540 and 2D .1806.

2. PERMIT RENEWAL AND EMISSION INVENTORY REQUIREMENT - The Permittee, at least 90 days prior to the expiration date of this permit, shall request permit renewal by letter in accordance with 15A NCAC 2Q .0304(d) and (f). Pursuant to 15A NCAC 2Q .0203(i), no permit application fee is required for renewal of an existing air permit (without a modification request). The renewal request (with AA application form) should be submitted to the Regional Supervisor, DAQ. Also, at least 90 days prior to the expiration date of this permit, the Permittee shall submit the air pollution emission inventory report (with Certification Sheet) in accordance with 15A NCAC 2D .0202, pursuant to N.C. General Statute 143 215.65. The report shall be submitted to the Regional Supervisor, DAQ and shall document air pollutants emitted for the 2016 calendar year.

3. SULFUR DIOXIDE CONTROL REQUIREMENT - As required by 15A NCAC 2D .0516 "Sulfur Dioxide Emissions from Combustion Sources," sulfur dioxide emissions from the combustion sources shall not exceed 2.3 pounds per million Btu heat input.

4. VISIBLE EMISSIONS CONTROL REQUIREMENT - As required by 15A NCAC 2D .0521 "Control of Visible Emissions," visible emissions from the emission sources, manufactured after July 1, 1971, shall not be more than 20 percent opacity when averaged over a six-minute period, except that six-minute periods averaging not more than 87 percent opacity may occur not more than once in any hour nor more than four times in any 24-hour period. However, sources which must comply with 15A NCAC 2D .0524 "New Source Performance Standards" or .1110 "National Emission Standards for Hazardous Air Pollutants" must comply with applicable visible emissions requirements contained therein.

5. 15A NCAC 2D .0524 "NEW SOURCE PERFORMANCE STANDARDS" - For the following equipment, the Permittee shall comply with all applicable provisions, including the notification, testing, reporting, recordkeeping, and monitoring requirements contained in Environmental Management Commission Standard 15A NCAC 2D .0524 "New Source Performance Standards" (NSPS) as promulgated in the 40 CFR Part 60, Subpart indicated below, and including Subpart A "General Provisions."

| Affected Source(s) | Regulation |
|---|---|
| Landfill gas-fired engine-generator set (1,600 ekW; 2,233 bhp) (ID No. ES-01) | Subpart JJJJ – Standards of Performance for Stationary Spark Ignition Combustion Engines (SI ICE) |

a. NSPS Emissions Standards - The following emissions limits shall not be exceeded:

i. The SI ICE must meet the emissions standards as listed in the following table;[60.4233(e)] and

| Engine type and fuel | Maximum engine power | Manufacture date | Emissions standards | | | | | |
|---|---|---|---|---|---|---|---|---|
| | | | g/HP-hr | | | ppmvd at 15% $O_2$ | | |
| | | | $NO_x$ | CO | VOC | $NO_x$ | CO | VOC |
| Landfill/Digester Gas | HP≥500 | 7/1/2010 | 2.0 | 5.0 | 1.0 | 150 | 610 | 80 |

ii. Owners and operators of stationary SI ICE must operate and maintain stationary SI ICE that achieve the emission standards as required in 40 CFR 60.4233 over the entire life of the engine.[60.4234]

b. NSPS Other Requirements - In accordance with 40 CFR 60.4236(b), after July 1, 2009, the Permittee may not install a stationary SI ICE with a maximum engine power of greater than or equal to 500 HP that does not meet the applicable requirements at 40 CFR 60.4233.

c. NSPS Compliance Requirements - As required by 15A NCAC 2D .0524, the following compliance requirements shall apply:

i. If your stationary SI ICE must comply with the emission standards specified in 40 CFR 60.4233(d) or (e), you must demonstrate compliance according to the following method.[60.4243(b)]

A. Purchasing a non-certified engine and demonstrating compliance with the emission standards specified in 40 CFR 60.4233(d) or (e) and according to the requirements specified in 40 CFR 60.4244, as applicable, and according to the following:[60.4243(b)(2)]

I. If your stationary SI ICE is greater than 500 HP, you must keep a maintenance plan and records of conducted maintenance and must, to the extent practicable, maintain and operate the engine in a manner consistent with good air pollution control practice for minimizing emissions. In addition, you must conduct an initial performance test and conduct subsequent performance testing every 8,760 hours or 3 years, whichever comes first, thereafter to demonstrate compliance.[60.4243(b)(2)(ii)]

ii. It is expected that air-to-fuel ratio controllers will be used with the operation of three-way catalysts/non-selective catalytic reduction. If applicable, the AFR controller must be maintained and operated appropriately in order to ensure proper operation of the engine and control device to minimize emissions at all times.[60.4243(g)]

d. NSPS Performance Testing Requirements - The Permittee shall conduct performance testing as follows.[40 CFR 60.4244]

i. Each performance test must be conducted within 10 percent of 100 percent peak (or the highest achievable) load and according to the requirements at 40 CFR 60.8 and under the specific conditions that are specified by Table 2 to this subpart.[40 CFR 60.4244(a)]

ii. The Permittee may not conduct performance tests during periods of startup, shutdown, or malfunction, as specified at 40 CFR 60.8(c). If the stationary SI ICE is non-operational, the Permittee does not need to startup the engine solely to conduct a performance test; however, the Permittee must conduct

the performance test immediately upon startup of the engine.[40 CFR 60.4244(b)]

iii. The Permittee must conduct three separate test runs for each performance test required in this section, as specified at 40 CFR 60.8(f). Each test run must be conducted within 10 percent of 100 percent peak (or the highest achievable) load and last at least 1 hour.[40 CFR 60.4244(c)]

iv. To determine compliance with the $NO_x$ mass per unit output emissions limitation, convert the concentration of $NO_x$ in the engine exhaust using Equation 1 of 60.4244(d).

v. To determine compliance with the CO mass per unit output emissions limitation, convert the concentration of CO in the engine exhaust using Equation 2 of 60.4244(e).

vi. To determine compliance with the VOC mass per unit output emissions limitation, convert the concentration of VOC in the engine exhaust using Equation 3 of 60.4244(f). For purposes of this subpart, when calculating emissions of VOC, emissions of ethane, formaldehyde, and methane should not be included.

vii. If the Permittee chooses to measure VOC emissions using either Method 18 of 40 CFR Part 60, Appendix A, or Method 320 of 40 CFR Part 63, Appendix A, then the Permittee has the option of correcting the measured VOC emissions to account for the potential differences in measured values between these methods and Method 25A. The results from Method 18 and Method 320 can be corrected for response factor differences using Equations 4 and 5 of 60.4244(g). The corrected VOC concentration can then be placed on a propane basis using Equation 6 of 60.4244(g).

viii. At least 45 days prior to performing any required emissions testing, the Permittee must submit a testing protocol to the Regional Supervisor, DAQ for review and approval. All testing protocols must be approved by the DAQ prior to performing such tests.

ix. To afford the Regional Supervisor, DAQ, the opportunity to have an observer present, the Permittee shall PROVIDE the Regional Office, in WRITING, at least 15 days notice of any required performance test(s).

x. The performance testing shall be conducted within 60 days after achieving the maximum production rate at which the affected facility will be operated, but not later than 180 days after initial startup.

xi. This permit may be revoked, with proper notice to the Permittee, or enforcement procedures initiated, if the results of the test(s) indicate that the facility does not meet applicable limitations.

xii. All associated testing costs are the responsibility of the Permittee.

e. NSPS Notification Requirements - Owners and operators of stationary SI ICE greater than or equal to 500 HP that have not been certified by an engine manufacturer to meet the emission standards in 40 CFR 60.4231 must submit an initial notification as required in 40 CFR 60.7(a)(1). The notification must include the information in paragraphs (i) through (v) of this section.[60.4245(c)]

   i. Name and address of the owner or operator;[60.4245(c)(1)]

   ii. The address of the affected source;[60.4245(c)(2)]

   iii. Engine information including make, model, engine family, serial number, model year, maximum engine power, and engine displacement;[60.4245(c)(3)]

   iv. Emission control equipment;[60.4245(c)(4)] and

   v. Fuel used.[60.4245(c)(5)]

f. NSPS Recordkeeping Requirements - As required by 15A NCAC 2D .0524, the following recordkeeping requirements shall apply:

   i. The Permittee must keep records as follows:[60.4245]

      A. All notifications submitted to comply with this subpart and all documentation supporting any notification.[60.4245(a)(1)]

      B. Maintenance conducted on the engine.[60.4245(a)(2)]

      C. If the stationary SI ICE is not a certified engine or is a certified engine operating in a non-certified manner and subject to 40 CFR 60.4243(a)(2), documentation that the engine meets the emission standards.[60.4245(a)(4)]

   ii. All records required under this section shall be maintained for a period of two years following the date of such record. All records shall be kept on-site and made available to DAQ personnel upon request. The Permittee shall be deemed in noncompliance with 15A NCAC 2D .0524 if recordkeeping requirements are not maintained.[40 CFR 60.7(f)]

g. NSPS Reporting Requirement - As required by 15A NCAC 2D .0524, the following reporting requirement shall apply:

   i. The Permittee must submit a copy of each performance test within 60 days after the test has been completed.[60.4245(d)]

6. NOTIFICATION REQUIREMENT - As required by 15A NCAC 2D .0535, the Permittee of a source of excess emissions that last for more than four hours and that results from a malfunction, a breakdown of process or control equipment or any other abnormal conditions, shall:

a. Notify the Director or his designee of any such occurrence by 9:00 a.m. Eastern time of the Division's next business day of becoming aware of the occurrence and describe:

   i. The name and location of the facility;

   ii. The nature and cause of the malfunction or breakdown;

   iii. The time when the malfunction or breakdown is first observed;

   iv. The expected duration; and

   v. An estimated rate of emissions.

b. Notify the Director or his designee immediately when the corrective measures have been accomplished.

This reporting requirement does not allow the operation of the facility in excess of Environmental Management Commission Regulations.

7. FUGITIVE DUST CONTROL REQUIREMENT - As required by 15A NCAC 2D .0540 "Particulates from Fugitive Dust Emission Sources," the Permittee shall not cause or allow fugitive dust emissions to cause or contribute to substantive complaints or excess visible emissions beyond the property boundary. If substantive complaints or excessive fugitive dust emissions from the facility are observed beyond the property boundaries for six minutes in any one hour (using Reference Method 22 in 40 CFR, Appendix A), the owner or operator may be required to submit a fugitive dust plan as described in 2D .0540(f).

   "Fugitive dust emissions" means particulate matter that does not pass through a process stack or vent and that is generated within plant property boundaries from activities such as: unloading and loading areas, process areas stockpiles, stock pile working, plant parking lots, and plant roads (including access roads and haul roads).

8. CONTROL AND PROHIBITION OF ODOROUS EMISSIONS - As required by 15A NCAC 2D .1806 "Control and Prohibition of Odorous Emissions," the Permittee shall not operate the facility without implementing management practices or installing and operating odor control equipment sufficient to prevent odorous emissions from the facility from causing or contributing to objectionable odors beyond the facility's boundary.

9. GENERALLY AVAILABLE CONTROL TECHNOLOGY - For the following source(s), the Permittee shall comply with all applicable provisions as promulgated in the 40 CFR Part 63, Subpart below, including Subpart A "General Provisions."

| Affected Source(s) | Regulation |
|---|---|
| Landfill gas-fired engine-generator set (1,600 ekW; 2,233 bhp) (ID No. ES-01) | Subpart ZZZZ - Reciprocating Internal Combustion Engines |

a. Per 40 CFR 63.6590(c), an affected source that is a new or reconstructed stationary RICE located at an area source must meet the requirements of this part by meeting the requirements of 40 CFR Part 60, Subpart JJJJ for spark ignition engines. No further requirements apply for such engines under this part.

10. NC SENATE BILL 3 BEST AVAILABLE CONTROL TECHNOLOGY (BACT) - The pollutants covered under the State BACT are Carbon Monoxide (CO), Nitrogen Oxides (NOx), Particulate Matter (PM10/PM2.5), Volatile Organic Compounds (VOCs), Sulfur Dioxide ($SO_2$), Lead (Pb), and Mercury (Hg). BACT shall be applied to emissions resulting from biomass combustion on a per pollutant basis.

    a. Best Available Control Technology:

        i. In order to comply with the best available control technology (BACT) determination pursuant to GS 62.133.7 (g) for Carbon Monoxide:

            A. Carbon Monoxide emissions shall not exceed 2.75 g/hp-hr.

        ii. In order to comply with the best available control technology (BACT) determination pursuant to GS 62.133.7 (g) for Nitrogen Oxide:

            A. Nitrogen Oxide emissions shall not exceed 0.50 g/hp-hr.

        iii. In order to comply with the best available control technology (BACT) determination pursuant to GS 62.133.7 (g) for PM10/PM2.5:

            A. PM10/PM2.5 emissions shall not exceed 0.15 g/hp-hr.

        iv. In order to comply with the best available control technology (BACT) determination pursuant to GS 62.133.7 (g) for Sulfur Dioxide:

            A. Sulfur Dioxide shall be controlled from each engine using good combustion practices and the burning of landfill gas in the engine.

        v. In order to comply with the best available control technology (BACT) determination pursuant to GS §62.133.7 (g) for Volatile Organic Compounds:

            A. Volatile Organic Compounds shall be controlled from each engine using good combustion practices and the burning of landfill gas in the engine.

        vi. In order to comply with the best available control technology (BACT) determination pursuant to GS 62.133.7 (g) for Mercury:

            A. Mercury shall be controlled from each engine using good combustion practices and the burning of landfill gas in the engine.

        vii. In order to comply with the best available control technology (BACT) determination pursuant to GS 62.133.7 (g) for Lead:

A. Lead shall be controlled from each engine using good combustion practices and the burning of landfill gas in the engine.

b. If emission testing is required, the testing shall be performed in accordance with 15A NCAC 2D .2602. If the results of this test are above the applicable limit, the Permittee shall be deemed in noncompliance with GS §62-133.7(g).

c. The Permittee shall perform inspections and maintenance as recommended by the manufacturer. In addition to the manufacturer's inspection and maintenance recommendations, or if there is no manufacturer's inspection and maintenance recommendations, as a minimum, the inspection and maintenance requirement shall include the following:

i. The Permittee shall perform an annual inspection (for each 12 month period following the initial inspection) to ensure the engine is operating properly.

ii. The results of inspection and maintenance shall be maintained in a logbook (written or electronic format) on-site and made available to an authorized representative upon request. The logbook shall record the following:

A. The date and time of each recorded action;

B. The results of each inspection;

C. The results of any maintenance performed on the engine; and

D. Any variance from manufacturer's recommendations, if any, and the corrections made.

d. Reporting Requirements - The Permittee shall maintain a monthly summary report, acceptable to the Regional Air Quality Supervisor, of monitoring and recordkeeping listed above and shall submit the results within 30 days of a written request by the DAQ.

## B. GENERAL CONDITIONS AND LIMITATIONS

1. TWO COPIES OF ALL DOCUMENTS, REPORTS, TEST DATA, MONITORING DATA, NOTIFICATIONS, REQUESTS FOR RENEWAL, AND ANY OTHER INFORMATION REQUIRED BY THIS PERMIT shall be submitted to the:

Regional Air Quality Supervisor
North Carolina Division of Air Quality
Winston-Salem Regional Office
585 Waughtown Street
Winston-Salem, NC 27107
(336) 771-5000

For identification purposes, each submittal should include the facility name as listed on the permit, the facility identification number, and the permit number.

2. RECORDS RETENTION REQUIREMENT - Any records required by the conditions of this permit shall be kept on site and made available to DAQ personnel for inspection upon request. These records shall be maintained in a form suitable and readily available for expeditious inspection and review. These records must be kept on site for a minimum of 2 years, unless another time period is otherwise specified.

3. ANNUAL FEE PAYMENT - Pursuant to 15A NCAC 2Q .0203(a), the Permittee shall pay the annual permit fee within 30 days of being billed by the DAQ. Failure to pay the fee in a timely manner will cause the DAQ to initiate action to revoke the permit.

4. EQUIPMENT RELOCATION - A new air permit shall be obtained by the Permittee prior to establishing, building, erecting, using, or operating the emission sources or air cleaning equipment at a site or location not specified in this permit.

5. REPORTING REQUIREMENT - Any of the following that would result in previously unpermitted, new, or increased emissions must be reported to the Regional Supervisor, DAQ:

    a. Changes in the information submitted in the application regarding facility emissions;

    b. Changes that modify equipment or processes of existing permitted facilities; or

    c. Changes in the quantity or quality of materials processed.

    If appropriate, modifications to the permit may then be made by the DAQ to reflect any necessary changes in the permit conditions. In no case are any new or increased emissions allowed that will cause a violation of the emission limitations specified herein.

6. This permit is subject to revocation or modification by the DAQ upon a determination that information contained in the application or presented in the support thereof is incorrect, conditions under which this permit was granted have changed, or violations of conditions contained in this permit have occurred. The facility shall be properly operated and maintained at all times in a manner that will effect an overall reduction in air pollution. Unless otherwise specified by this permit, no emission source may be operated without the concurrent operation of its associated air cleaning device(s) and appurtenances.

7. This permit is nontransferable by the Permittee. Future owners and operators must obtain a new air permit from the DAQ.

8. This issuance of this permit in no way absolves the Permittee of liability for any potential civil penalties which may be assessed for violations of State law which have occurred prior to the effective date of this permit.

9. This permit does not relieve the Permittee of the responsibility of complying with all applicable requirements of any Federal, State, or Local water quality or land quality control authority.

10. Reports on the operation and maintenance of the facility shall be submitted by the Permittee to the Regional Supervisor, DAQ at such intervals and in such form and detail as may be

required by the DAQ. Information required in such reports may include, but is not limited to, process weight rates, firing rates, hours of operation, and preventive maintenance schedules.

11. A violation of any term or condition of this permit shall subject the Permittee to enforcement pursuant to G.S. 143-215.114A, 143-215.114B, and 143-215.114C, including assessment of civil and/or criminal penalties.

12. Pursuant to North Carolina General Statute 143-215.3(a)(2), no person shall refuse entry or access to any authorized representative of the DAQ who requests entry or access for purposes of inspection, and who presents appropriate credentials, nor shall any person obstruct, hamper, or interfere with any such representative while in the process of carrying out his official duties. Refusal of entry or access may constitute grounds for permit revocation and assessment of civil penalties.

13. The Permittee must comply with any applicable Federal, State, or Local requirements governing the handling, disposal, or incineration of hazardous, solid, or medical wastes, including the Resource Conservation and Recovery Act (RCRA) administered by the Division of Waste Management.

14. PERMIT RETENTION REQUIREMENT - The Permittee shall retain a current copy of the air permit at the site. The Permittee must make available to personnel of the DAQ, upon request, the current copy of the air permit for the site.

15. CLEAN AIR ACT SECTION 112(r) REQUIREMENTS - Pursuant to 15A NCAC 2D .2100 "Risk Management Program," if the Permittee is required to develop and register a risk management plan pursuant to Section 112(r) of the Federal Clean Air Act, then the Permittee is required to register this plan with the USEPA in accordance with 40 CFR Part 68.

16. PREVENTION OF ACCIDENTAL RELEASES - GENERAL DUTY - Pursuant to Title I Part A Section 112(r)(1) of the Clean Air Act "Hazardous Air Pollutants - Prevention of Accidental Releases - Purpose and General Duty," although a risk management plan may not be required, if the Permittee produces, processes, handles, or stores any amount of a listed hazardous substance, the Permittee has a general duty to take such steps as are necessary to prevent the accidental release of such substance and to minimize the consequences of any release. This condition is federally-enforceable only.

17. GENERAL EMISSIONS TESTING AND REPORTING REQUIREMENTS - If emissions testing is required by this permit, or the DAQ, or if the Permittee submits emissions testing to the DAQ in support of a permit application or to demonstrate compliance, the Permittee shall perform such testing in accordance with 15A NCAC 2D .2600 and follow all DAQ procedures including protocol approval, regional notification, report submittal, and test results approval.

Permit issued this the 13th of December, 2012.

NORTH CAROLINA ENVIRONMENTAL MANAGEMENT COMMISSION

Margaret A. Love

Margaret A. Love, P.E.
Regional Air Quality Supervisor
By Authority of the Environmental Management Commission

Air Permit No. 10275R00

**Insignificant / Exempt Activities**

| Source(s) | Exemption Regulation | Source of TAPs? | Source of Title V Pollutants? |
|---|---|---|---|
| IES-01 – Leachate/storm water treatment process | 2Q .0102(c)(1)(F) | No | No |

1. Because an activity is exempted from being required to have a permit or permit modification does not mean that the activity is exempted from an applicable requirement or that the owner or operator of the source is exempted from demonstrating compliance with any applicable requirement.

2. When applicable, emissions from stationary source activities identified above shall be included in determining compliance with the permit requirements for toxic air pollutants under 15A NCAC 2D .1100 "Control of Toxic Air Pollutants" or 2Q .0711 "Emission Rates Requiring a Permit."