P.O. Box 129
Morrisville, NC 27560

919-467-1239

MacCONNELL
& ASSOCIATES, P.C.

1903 North Harrison Avenue
Suite 102
Cary, NC 27513

Fax 919-319-6510

December 12, 2013

Ms. Donna J. Wilson
Environmental Engineer
Composting and Land Application Branch
NCDENR - Division of Waste Management
Solid Waste Section
1646 Mail Service Center
Raleigh, North Carolina 27699-1646

Received
DEC 2013
Waste
Management

Re: Craven Ag Services Compost Facility
Comment Responses October 16th
MacConnell & Associates, P.C. Project No.: A45201.00

Dear Ms. Wilson:

In response to your email dated October 16, 2013, relative to the above referenced project, the following additional information and responses are provided. Per Christine Ritter's email dated October 16, 2013, proposed monitoring well #2 is removed from Plan Sheets C-101, C-102, and C-103. On future correspondence please cite the rule for all comments. One hard copy and one electronic copy of the revised information is provided for your review to the address above.

1. The coal ash that is to be used for the soil texture modification should be tested for total metals again to ensure consistency of the analysis.

   Response: Please see attached Memo from A. R. Rubin. Billy Dunham with Craven Ag Services is planning to retest the coal ash.

2. Please provide a table listing the loading amount and metals concentration for the ash to be used for the soil texture modification, similar to Bob Rubin's email dated 10-2-12.

   Response: Please see attached Memo from A. R. Rubin.

3. How will the reworked areas be tested/soil classified to ensure that the modified soil texture meets the requirements of 1404(a)(10)(B), that is, finer than loamy sand? What is the process? How many samples will be taken for soil classification? It should be stated that all three areas will be tested.

   Response: Please see attached Memo from A. R. Rubin.

4. Please add a description of the vegetated buffers to the text of the application, in addition to, or instead of, the description on Drawing C-102. As was discussed with Mr. Dunham, the descriptions should state that the buffer areas will receive a layer of compost (provide thickness), disked in, before being seeded.

   Response: Please see last paragraph on page 7 for vegetative buffer description.

5. Please provide an update to the Sedimentation and Erosion Control permit application.

   Response: Permit was issued by Division of Energy, Mineral, and Land Resources on September 9, 2013. Please see attached copy.

6. Please provide analytical data for the DAF skimmings from Maola.

   Response: DAF Skimmings from Maola will be tested by Craven Ag Services. Table 1 on page 11 is revised to show applicable data from other facilities.

7. Operations Guide – Page 1, Location – Please add the physical site address for the compost operation. I believe it is 5391 River Road, Vanceboro.

   Response: Please see revised Page #2 of the Operations Guide.

8. Operations Guide - Page 8 (Section 1.2, second paragraph) - Please change "bin" to "mixer" or "mix pad." I assumed "bin" was a storage container or bunker.

   Response: Please see revised Page 8 of the Operations Guide, "bin" is changed to "compost mix pad."

9. Section 2.4 – Please remove references to leachate sink and liquid collection basin.

   Response: Please see revised item #7 in Section 2.4 of the Operations Guide.

10. The mixing pad detail drawing, 7/D-102, is confusing in that it appears that the mixing area, intended for compost, will be filled in with concrete.

    Response: Existing concrete pad details provides a section cut that shows the push wall. This push wall is made of concrete block or poured in place concrete and is hatched to appear as concrete. Detail provided is typical of current industry standards and is unchanged.

11. Drawing D101 - The distance between curing and finished pile storage should be at least 6 to 8 feet to allow access to firefighting equipment in the event of a fire.

    Response: Please see revised chart on detail 1, Sheet D-101.

12. If all compost finished product is mixed with wood ash, then the marketing distribution sheet should provide information to the public on the ash, and note any restrictions.

    Response: Please see attached "CAS Compost Quality, Distribution, and Use" Guide that will be distributed to customers.

13. The application should contain engineer's signature and seal.

    Response: Please see signature and seal on revised Operations Guide Cover Page.

If you have any questions please call me or Zachary L. Fuller, PE at (919) 467-1239. Thank you for your assistance.

Sincerely,

Gary S. MacConnell, PE
President

A. R. Rubin

Enclosures

cc: J. W. (Billy) Dunham – Craven Ag Services

Craven Ag Service, Inc. Compost Facility Operations Guide For Large Type III Facility

November 2013

Prepared for: Craven Ag Service, Inc.
Compost Site Located at
5391 River Road
Vanceboro, NC

Developed by: J. W. (Billy) Dunham, Craven Ag Service
Dr. A. R. Rubin,
Gary MacConnell, P.E., and
Zach Fuller, P.E.

NORTH CAROLINA PROFESSIONAL SEAL 17069 ENGINEER GARY S. MACCONNELL 11/21/13

Craven Ag Service, Inc.; Large Type III Compost Facility Information

Owner: J. W. (Billy) Dunham

Location: Site Location: 5391 River Road
Vanceboro, NC

Office Location:
2115 W. Highway 55
New Bern NC

Permit: Pending

Primary Contact: J. W. (Billy) Dunham

Office: 252 663 5334 (CAS Office, Highway 55 – NO office is located on the site, but a shed will be provided for equipment, supplies and shelter)
Cell: 252 670 8530

Regulatory Agency Emergency Contact:

NCDWM, Eastern Region: Ray Williams (2529483955)

Hours of Operation:

Monday to Friday: 7:00 AM – 7:00 PM
Saturday: 7:00 am – 3:00PM
Sunday: Closed

Prohibited Feedstocks:

Hazardous waste
Infectious waste

Craven Ag Service Compost Facility - Operations Guide

1.0 Introduction

The Craven Ag Service Compost Facility is located in the northern part of Craven County, North Carolina, near the intersection of River Road and Highway 4, approximately 5 miles southwest of Vanceboro, NC. This facility currently operates in accordance with a demonstration permit, and will be permitted by NCDENR-DWM as a Large Type 3 composting operation. The purpose of this operations guide is to comply with Section 1406 of the DWM regulations. Key personnel involved in the production of compost at this facility will acknowledge reading of this manual (below) to assure a basic understanding of the policies and procedures contained herein.

NAME:	DATE:
NAME:	DATE
NAME:	DATE:

Site management personnel will receive training as provided by the U.S. Compost Council, NC DWM, NCSU and the training activities shall be documented. The site owner is certified through DWQ as a residuals Land Applicator and through DWM a Septage Land Applier.

The raw feedstock materials for the composting operation will come from permitted sources. Please see Table 3-1 (Section G, Part 3 - Raw Materials, Proposed Feedstock Volumes and Protocol For Compost) in the Application.

Materials composted must be permitted in the DWM permit. New feedstocks will be tested (typically by NCDA) and approved by consultants to Craven Ag Service or DWM prior to receipt.

The composting operation will be conducted in open windrows specifically designed for compost production. Feedstock storage and final composting/curing will occur on compacted soil based pads. The windrows are fed from a concrete mixing pad and fresh compost is discharged following the PFRP and VAR compliance stage of the windrow process to a second portion of the compacted soil pad. The Concrete mix/blend pad will be developed as soon as permitted. The pad consists of a mix/blend area located in Area 1. The concrete pad consists of a reinforced concrete pad as designed. The pad contains a sloping bottom mix/blend area and a flat storage/receiving area as specified on the attached drawing. The mixed/blended materials will be transported to the active compost production pads located as shown on the site plan for composting. These areas will be slowly permeable pads.

Construction assurance for the concrete area will be documented by the design team and certified by the project team to DWM. Should documentation be required for the current compacted soil pads that will be provided by the team to DWM. The compacted pads help prevent introduction of undesirable material such as stones into the compost. Liquid or leachate generated during the compost feedstock mixing will be collected in a tanker, reused as a moisture source in compost, or transported off site to an approved wastewater facility.

1.1 Composting Requirements and General Operations

Compost is defined by the U.S. Composting Council as "the product resulting from the controlled biological decomposition of organic matter that has been sanitized through the generation of heat and stabilized to the point that it is beneficial to plant growth." Composting is accomplished by mixing an energy source (carbonaceous material) with a nutrient source (nitrogen and phosphorus containing materials) in a prescribed manner to meet microbial requirements necessary to support metabolic processes. Moisture levels, solids levels, and nutrient levels in the compost feedstocks are controlled to assure the process reaches the required temperatures for the time prescribed by rule (15 days above 131 degrees F with 5 turnings in that 15 day time). The process is carried out under specific moisture and temperature conditions for a specified period of time. Critical steps and procedures are necessary to ensure that the composting process proceeds properly with a minimum of odors, adverse environmental impacts, and other process related problems. This O and M Manual is intended to enumerate many of these steps and procedures.

The facility will be divided into four (4) distinct areas. A process flow diagram is provided in the attachment to this report. These processes are accomplished in the areas as listed herein: receiving area, active composting area, curing area, and storage area.

Receiving area (mix pad): Here raw materials are received, this does include the concrete mix pad at the entrance to the process; here incoming materials are mixed and blended in preparation for subsequent placement in the windrows and these materials are inspected visually to assure only permitted products are present (unpermitted materials will be removed placed in a small 8 to 10 cubic yard dumpster and transported to a MSW landfill). Mixing, blending and measures will be accomplished on a "by volume" basis. Weight measures may be accomplished at the various sources, but compost operations will be based on volumetric assessments. Wood waste, wood chip, and yard waste will be chipped prior to use as feedstock.

Active Composting (Windrow) area: here the mixed/blended materials from the mix pad are placed into the long windrows for compost operations and where PFRP and VAR compliance will take place;

Curing area: here composted materials stored or cured, screened and prepared for distribution; and

Storage and final processing area: here finished, screened materials are stored prior to distribution and marketing or transport off site. This is a compacted, exterior storage area where finish compost is field stored and awaiting transport to various markets.

Materials permitted for receipt at the facility will be received in the receiving area. Solid and Semi Dry materials from off-site sources (litter, shavings, etc) will be stored for short times to prevent addition of moisture on the compacted pad or the concrete pad waiting blending with the dewatered septage and FOG. If necessary, dry materials will be covered with a tarp to prevent moisture accumulation. Dewatered Grease Trap and Septic Waste which has been processed through the Dewatering box at the Craven Ag Dewatering facility off Highway 55 will be placed

onto the concrete mixing pad for proper mixing with the dry bulking materials using the loader bucket and the lift and drop mix method. The dewatered materials will be stored at the CAS Dewatering site and will be transported to the compost area only for processing into compost; NO FOG/septage will be stored on the compost site. The dewatered material from the dewatering site will be transported to the compost site in 20 cubic yard leak proof boxes as currently accomplished for immediate mixing and blending – NO dewatered material storage is proposed. All putrescible materials will be mixed and blended during a workday. Prior to daily closing, mixed/blended material will be placed into a windrow. NO putrescible will be stored overnight without blending as a compost feedstock.

A volume of wood shavings or litter equal to the volume of dewatered material will be placed on the pad. The material volumes are determined by loader scoop volume (typically 2 cubic yards per loader). The dewatered material and the dry bulking material will be mixed together for approximately 10 to 20 minutes to assure complete mixing. This process is not intended to generate excess liquid. Should liquid be generated during this initial mixing, it will be collected by gravity flow to the base of the pad and discharged to the dry bulking materials for subsequent use or be collected in a tanker for subsequent use as liquid; any excess moisture can be transported to Kinston for processing, but that is not anticipated. Materials will not be accepted at the site during inclement weather since ingress and egress is difficult.

Prior to blending or transport into the compost windrows area, all materials will be examined to assure proper moisture level (upon firm squeezing, material will release a thin film of water to hand or a few drops of water). If material is too wet, additional bulking material will be added to dry the mixture; if too dry, liquid from the tanker described above will be added to the mixture to provide moisture. Dry materials will be mixed or blended at the proprietary mix or blend ratios developed at Craven Ag Service for various compost end uses and markets.

Materials will be formed into the windrows using the loader-mixer buckets or by dump truck. Feedstock materials will be transported to the windrows and placed carefully in windrows by lifting and dropping materials to provide final mixing and blending, preliminary aeration, and minimal compaction prior to windrow activities. Windrow dimensions shall be as shown in the chart below. Material placed in this manner should heat adequately to assure PFRP compliance. Temperatures will be monitored and recorded daily to demonstrate compliance with PFRP and VAR requirements. Windrow areas are designated on the facility permit and all windrows will be marked with date of formation and dates of turning.

Windrow/Pile Type	Maximum Height	Maximum Width	Average Windrow Spacing
Active	6 feet	15 feet	8 feet
Curing	20 feet	25 feet	4 feet
Finished Product	30 feet	50 feet	4 feet
Dry Feedstocks	30 feet	50 feet	N/A

The windrow compost process achieves the VAR and PFRP compliance. Demonstrated compliance with VAR requires temperatures exceeding 104 degrees F for 14 days or longer, and averaging 114 degrees F or higher for the 14 day period. This is the minimum temperature

required and this is intended as PFRP, not PSRP consequently the higher temperature/longer time is required.

Compliance with PFRP requires maintaining temperatures above 131 degrees F for 15 days with at least 5 turnings of the windrows. The intent of this activity is to expose all particles in the windrow to the high PFRP temperatures. These PFRP temperatures have consistently been exceeded in the VAR area of windrow operations and a PFRP windrow is a "de facto" VAR. Material will be moved through the active compost production area (area 2) using a front-end-loader bucket to lift and drop or windrow turner (as available) until material has achieved required VAR and PFRP compliance and has been rotated in the windrow for a minimum of 60 days to cure unless a row crop operation has a need for the PFRP compliant product.

Temperatures will be monitored during active composting at specified locations located every 25 feet along each windrow and at depths of 24" and 36" into the windrow at each of these locations. Temperature monitoring will be accomplished Monday through Saturday. Once compliance with all PFRP and VAR requirements has been established through the time/temperature monitoring, the compost shall be moved to area 3 for curing and screening. Materials not meeting the required time/temperature standard will be transported to a permitted MSW facility, applied to a permitted septage site, or returned to the head of a windrow for reprocessing.

The curing/screening area is intended as the portion of the site where the compost matures and is prepared for distribution. Compost in the curing area will be turned approximately once per week. This process is important in developing stable compost suitable for a wide variety of end-use applications. The stability and maturity of the compost will be assessed through the Solvita test. Once a material has met standards for the Solvita test, curing is complete and the material is mature compost suitable for any use. Compost material can be used any time following compliance with the 15 day, 5 turning, temperature over 131 degrees F if a suitable receiver crop is available. Typically this fresh compost is best suited to row crop applications.

Once ready for distribution, the compost will be transported by loader to a screening operation collocated with storage in the storage area. The screen separates fine material from coarse material. The fines are placed into the final stage of the operation while the larger materials are recycled back through the compost operation by transport back to the initial mix pad area in dump-truck or loader to feedstock storage/mix/blend area. Here these coarse materials are mixed and blended with incoming material and returned to compost windrows as "seed". Undesirable materials removed during screening will be collected on site in a small dumpster and transported to a MSW landfill for disposal as required. These undesirable materials will be stored in a small dumpster located near the screen until sufficient volume is available for MSW disposal.

A quality assurance/quality control program will be instituted at Craven Ag Service. This process will help to assure:

A. Compliance with appropriate rules and regulations
B. Product quality consistent with specified or designated end use
C. Trained personnel remain available to manufacture quality compost

The QA/QC effort will involve the compliance testing and monitoring including: routine temperature monitoring and recording, nutrient and regulated metals testing, foreign material content and bacteriologic sampling. Nutrient sampling will be conducted by NCDA. The compliance testing for regulated metals and bacteria will be conducted by a private certified laboratory. Sampling will be conducted initially for every 10,000 tons of material produced or four times (3 month intervals) per year to assure compliance with rule and adequate QA/QC is in place. This is more rigid than current rule and is deemed necessary to demonstrate compliance. Annual calibration will be required on temperature probes. An annual report submitted to DWM is required as a part of the QA/QC program.

In the event that an additional raw material stream becomes available to be added to the composting operation, the material will be submitted for review and approval by the DWM-Solid Waste Section or to this consultant prior to use as a feedstock. The following procedure will be utilized to submit raw materials for approval to the Solid Waste Section:

1. A sample of the raw material will be taken according to the protocol detailed in Section 5.2 of this manual.
2. The sample will be analyzed for the parameters listed in Table 2, Section 5.3 of this manual.
3. A report of the analysis results and a written request for inclusion of the raw material, including proposed handling instructions for the raw material, will be submitted to the Solid Waste Section. The request will include: source, volume, and assurance that the volume proposed will not facilitate permit violation.
4. Upon notification of approval of the raw material by the Solid Waste Section, the raw material may be incorporated into the process used for compost production.

Incoming or raw material will be inspected visually prior to and during the initial mix/blend operation by the facility operator to assure unwanted trash is not present, that no material received is prohibited by permit, and that the material received is authorized under the permit. This will occur as material is placed on the mix pad and as material is placed in the mixer. As stated, undesirable materials will be transported to a MSW landfill or returned to the generator where possible.

During periods of excessive rainfall, runoff will result. The vegetated buffers down gradient of the site are intended to treat this runoff and allow infiltration. Vegetative buffers will be covered in one inch of compost, lightly disked, and planted with fescue. A soil test will determine the optimum nutrient requirements. The soil material present above the water-table is well suited to runoff during the infiltration process. Groundwater monitoring wells will be installed as recommended by Cpec Environmental, Inc.

1.2 Moisture

Appropriate moisture is necessary to compliment the biological processes of the microorganisms responsible for the degradation of organic matter and stabilization of compost. Composting is a naturally occurring aerobic process. Consequently, the moisture content is influenced by the necessity of supplying oxygen and venting off-gasses. As moisture increases, the particles in the compost become denser and air spaces shrink, limiting the supply of oxygen and the ability to off-gas. If oxygen supply drops to below 8%, the process becomes anaerobic and slows dramatically. The results are foul odors, and the need to restore the aerobic conditions, which will delay the processing time and reduce production rates.

Experience has shown that oxygen consumption in compost operations increase at moisture levels above 40% and reaches a maximum at 60%. Based on the proposed ratio of materials, the initial moisture content will be reduced from approximately 70% to the optimum initial moisture level of 60 % by mixing the wetter feedstocks with dry materials. The initial moisture levels encountered of near 70% will possibly slow the degradation process of the compost materials until moisture reduces to approximately 60%. As a consequence, the wetter feedstocks will be mixed with dry materials on a 50/50 volume ratio to increase solids levels and reduce moisture levels to a more optimum level prior to feeding the materials onto the compost mix pad. The optimum moisture content for compost materials transported to the windrow is 60% to 65%. This is the target for this operation and it will be met by the 50/50 mix (by loader bucket volume) using the front-end-loader to lift and drop, mix and blend feedstocks. All blending of feedstocks will occur on the concrete pad located at the end of the initial receiving area and in the mix pit collocated with the pad.

The composting process may also be inhibited when moisture levels fall below 40%. Moisture levels will be maintained such that compost materials are thoroughly wetted without being waterlogged or dripping excess water. As a rule of thumb, the compost materials are too wet if water can be squeezed out of a handful and too dry if the handful does not feel moist to the touch or if firm squeezing does not result in a film of water on the hand or gloved hand. A moisture meter, similar to that described in the Equipment Specifications (Appendix 2), would provide a more accurate determination of the initial moisture content of the compost material, but is not considered necessary for operation of the facility.

No additional moisture is needed for the compost process, should excessively hot and dry weather prevail and supplemental moisture is required, it will be supplied from a potable system and the time temperature requirements will restart. The basic compost materials, with the exception of the sawdust, litter, cotton wastes or gin trash and corncobs, are wet and therefore it is unlikely that very much additional moisture will be needed. In all likelihood, the material will normally compost "as-is" as achieved through blending with semi-solid and dry feedstock materials.

Given that multiple windows are presently used, excess moisture can be managed by simply allowing the initial heating cycle to rise, or by turning the windrows frequently to drive water vapor off by venting excess moisture to the atmosphere. The higher the heat generated in the process will also have the additional beneficial effect of killing off potentially pathogenic

organisms such as coliform or salmonella, helminthes eggs or cysts, or inactivating viruses and other organisms regulated in waste treatment processes.

Particle size and structure are also important when determining the optimum moisture content. Generally, the smaller the particles the more available the surface area for microorganism habitat and the greater the microbial activity. This is only the case if sufficient oxygen is available. Insufficient oxygen presents the same problem described earlier with too much moisture. A combination of excessive moisture and small particles is doubly detrimental. A typical target for particles 15 mm (1/2 inch) in diameter or larger is to keep the compost mixture content at 55-65% moisture. If the particles are 5-15 mm (less than ½ inch), a 45-55% moisture content is recommended. If particles are too small and/or wet, bulking materials such as sawdust, ground corn stover or ground wall-board can be added. This is also subject to variation depending on the specific materials available for the compost

1.3 Temperature

Temperature should be monitored closely every 25 feet along the windrow length in all active windrows and recorded daily. Metabolic or biological activity increases with increasing temperature. The optimum temperature range for composting and pathogen reduction is between 131° F (54.4° C) and 160° F (71.1° C) once the process has begun. As stated in the North Carolina Solid Waste Compost Rules section .1406, the facility shall maintain the compost process at a temperature above 131° F (55° C) for 15 consecutive days or longer, with 5 turnings to ensure the highest level of pathogen reduction. If pile temperature falls significantly during the composting period, odors may develop. If the pile material does not reach operating temperature, investigate piles for moisture content, porosity, and thoroughness of mixing. Compost managed at the required temperatures will favor destruction of pathogens.

Monitor temperature of the compost windrows **daily – except Sunday.** Appendix 1 provides a Temperature Record form. The system operator should monitor temperatures at specified monitoring locations along the windrow. Temperature monitoring locations are every 25 feet along active windrows. The temperature monitoring probes consist of 36 inch to 48 inch long dial stem thermometers. Temperature monitoring shall be accomplished at the 24 to 30 inch depth at each monitoring location. The temperature probes must be calibrated annually to assure they are reading temperatures accurately.

1.4 Mixing and Process Time

Mixing the compost with the loader bucket turner method is necessary to ensure that all particles are exposed to the high temperatures required to inactivate potentially pathogenic microorganisms. The mixing redistributes air pockets to insure proper oxygen levels for the composting process. The mixing is accomplished by the rotation of the composting mass. Mixing in the windrow with the lift and drop loader bucket turning method assures that all particles in the compost mass are exposed to the required temperatures for the required time. Pathogen reduction (PFRP) is achieved in the active compost windrow. Should any batch of material fail the PFRP requirement it will be reprocessed to achieve the 131 degree for 15 day with 5 turning requirement, transported to an approved MSW facility or applied to a permitted

land receive site in accordance with septage/FOG land treatment rules. The operator recognizes this will reduce the volume of septage and FOG which can be applied and the nutrient management plan will be adjusted accordingly. Records indicate NO "off spec" material has been produced during the CAS demonstration and the "recipe" for success is well established.

Mixing of raw materials with the loader is done to evenly distribute additives and bulk materials throughout the composting material. Feedstock mixing and blending shall be done on the concrete pad proposed; the pad is shown on the drawing attached. Feedstock mixing and blending prior to composting shall be done by mixing approximately 50% by volume active materials such as the dewatered septage and grease trap wastes with approximately 50% by volume wood chip/sawdust, 50% yard and leaf waste, etc. The pre-compost mixing shall be accomplished by successive scooping, lifting and dropping of materials with a 5 to 8 cubic yard front-end-loader bucket. At least three scoop/lift/fall cycles will be required to mix materials adequately. Liquids will be placed in the mass of material by creating a "v" shaped trough in the dry materials prior to adding the liquid materials.

The PFRP compliance temperature is achieved in the compost windrow area, and the curing stage follows the active compost phase. The curing phase will require between 60 days and 270 days of storage in the windrow. Curing time depends on end use; agricultural use is typically a 60 day cure time while horticultural uses may require up to 270 days of curing. Materials processed in the curing area will be tested using a Solvita test to assure adequate curing. Materials may be bagged or moved to bulk outside storage at off-site locations following finishing in the storage area. Disposition of compost following compliance depends on market outlets. The finished product is normally dark brown to black in color with a 60%-65% solids composition based on analysis. The odor is slightly earthy or musty and texture is loose. The volume is roughly half of the original volume.

Composting time required is primarily a function of the amount of air supplied. The efficiency can be increased and composting time decreased with added aeration by forced air or increasing turning cycles. This also produces a cooling effect which must be monitored. Once the most active of the composting processes is complete (as measured by PFRP Compliance), the compost can be stockpiled without further temperature monitoring until used.

1.5 Carbon:Nitrogen Ratio (C:N)

The carbon to nitrogen ratio is the most important chemical consideration in compost. The C:N ration desired is between 25:1 and 40:1. Other nutrients are generally contained in sufficient ratios for composting in most organic wastes. Carbon and nitrogen are consumed in the decomposition process at a rate which is proportional to one another.

The main goal is to produce compost which will not deprive soil of its natural nitrogen due to a nitrogen deficiency in the compost. A low carbon to nitrogen ratio during decomposition will result in ammonia volatilization. A high carbon to nitrogen ratio reduces the efficiency of the process, because more microbial activity is required to reduce the C:N ratio. The optimum C:N ratio for finished compost is between 25:1 and 40:1 (carbon to nitrogen). The NCDA tests (waste

analysis) will be used to assess C:N ratios. To assure levels are appropriate, C:N ratios will be assessed through routine sampling and when new feedstocks are added to the system.

1.6 Compost Recipes

Ongoing analysis has produced several compost recipes with potential for use at the composting facility. These recipes assume a "Plug Flow" batch of compost. The process time for the compost batch is normally 30 days in a windrow to comply with VAR and PFRP requirements and another 60 to 270 days in the Curing Pile prior to being screened and ready for market. Once cured and compliant with a Solvita test, the process can be considered a finish product and is suitable for distribution and beneficial use. The finish product may be moved off site and stocked for ultimate use. Typical chemical and moisture characteristics of common raw materials used in composting operations are shown in the following table.

Table 1. Raw Material Characteristics

Raw Material[1]	% N	C:N Ratio	% Moisture Content
Vegetable Waste	4.2	10:1	82
Dewatered Septage	3	25:1	70
Dewatered FOG	1.5	50-60:1	70
DAF Skimmings (est)	0.75 to 1.0	100 to 150:1	90
Hardwood Sawdust	0.09	560:1	25
Sawdust Bedding	0.24	442:1	40
Ground Corn Cobs	.6	98:1	15
Ash	<0.5	400:1	5
Gin trash/cotton waste	.5	120:1	10
Tobacco Dust	0.75 to 1.5	40:1	15
Ground Yard Waste	.9	80:1	40
Land Clearing Debris	.09	560:1	--

[1]Nitrogen and Carbon Information based on data from "On-Farm Composting Handbook" or testing on-site materials

2.0 Operations

The Craven Ag Service Compost Facility will be operated daily, from 7:00 am until 7:00 pm Monday through Friday and 7:00 am through 3:00 PM on Saturday. Additional hours of operation may occur during periods of high demand for the finished compost material; however, no Sunday operations are planned and these will be accomplished on a strict as needed basis.

Operations will proceed according to the requirements and procedures detailed in this operations manual.

2.1 Personnel Duties and Requirements

1. Compost Facility Operator - This individual is responsible for overall operation of the Compost facility. He is responsible for loading the proper amount of the selected raw material into the mixer to insure a good quality finished compost. In addition, the facility operator is responsible for maintaining all the temperature monitoring logs and collecting samples of the finished compost for analysis.

2. Assistant Facility Operator(s) - This individual will assist the facility operator, as necessary, and additionally will be responsible for upkeep and clean up around the compost facility. This individual will perform routine preventative maintenance on the composting equipment. This position will be filled as required, and may require more than one person.

3. Maintenance crew - These personnel will be provided from the on-site Craven Ag Service staff available to Craven Ag Environmental or from other operations as maintenance staff required to perform major maintenance or repairs on the equipment required for the composting activities.

4. Equipment crew - These personnel will be responsible for screening and custom blending the finished compost material, and for loading trucks for delivery.

5. Transport - These personnel will operate over-the-road transfer trucks. The compost will either be trucked to the final destination by over-the-road trucks, or may be removed by vendor trucks as well, depending on size of the order. It is anticipated that direct sale of bulk material to local contractors would be accommodated by direct loading of the buyer vehicles (private trucks or trailers).

2.2 Compost Testing Needs

In addition to the routine testing of the compost material every 10,000 tons or every 3 months for the parameters specified in Section 5 of this manual, and the 6 day/wk monitoring of the composting process for temperature, it may be advantageous to test compost material for carbon, nitrogen, moisture, and pH should compost fail to reach desired temperature or if odor problems develop. The finished compost material will be monitored every 3 months or 10,000 tons of compost processed (the smaller of the two) for nutrients and regulated metals tested by the North Carolina Department of Agriculture. More frequent testing will be accomplished as additional feedstock is added or as process optimization begins, to ensure that the composting process has been successful and that the NC Solid Waste Section annual reporting requirements have been met. Testing may be accomplished on a more frequent basis than required by rule as varying feedstocks are added to the compost and as end users require test product quality information. New feedstocks will be tested by NCDA Waste Analysis prior to incorporation.

2.3 Storage

Storage of finished compost should be limited to 4 to 6 months after completion of the process depending on market needs. Compost should be utilized within this time period if at all possible. Storage will be provided in either open areas of the on-site storage area in the area designated, immediately south of the processing area, on land out of the flood-plain or at off site locations awaiting disposition and use.

2.4 Maintenance Practices and Cleanliness

In order to optimize the composting process, proper maintenance of the facility and equipment is recommended. Listed below are some maintenance practices that can be implemented to ensure the productivity of the facility.

1. Do not allow any equipment that exceeds design load limits on or within twenty feet of the concrete pad.

2. Maintain all electrical and mechanical equipment in good operating condition by following electrical codes and manufacturers' recommendations. Inspect and repair grounding rods, switches, wiring, and all vehicles and equipment involved in the process.

3. Fences, railing, roofing, and/or warning signs must be maintained to provide warning and prevent unauthorized entry.

4. Repair any vehicular, vandalism or animal damage. Inspect and maintain runoff control structures.

5. Keep the area around the composting facility mowed and free of tall weeds and brush.

6. Clean, shovel, or dry sweep compost production and bagging areas as required to maintain pleasant work environment. Clean and dry any oil spills, wet material spills immediately to sustain reasonably safe work environment.

7. The stormwater section from DWQ has determined no runoff is generated in design rain events which may exit the site to surface water. In an emergency, liquid collected from the site will be transferred to the City of Kinston, NC WWTP. Any liquid addition to compost occurring following storm events will restart the PFRP Process at the time liquid is added to windrows.

The following is a list of practices that will reduce the potential of odors being emitted from the Compost Site. Where practical, some or all of these practices may be utilized. The odor management practices include:

1. Avoid overly wet feedstocks and compost. The use of relatively coarse co-composting materials that allow oxygen diffusion into the pile can help avoid odor problems.

2. Activities such as mixing and movement of odorous raw materials shall be scheduled to minimize the impact of odors. Accomplish these activities only early in the work day to take advantage of rising air currents. Avoid doing these activities on hot, still days or holidays and weekends. Windy conditions or early morning hours are better times to conduct such activities. Monitor the wind direction and postpone activities that may release significant odors when the wind is blowing toward the most sensitive neighbors.

3. Prevent puddles and standing water on the compost pad.

4. Minimize dust, which can transport odor by spraying a fine mist over roads and other surfaces.

5. Ensure that proper aeration, pH, and temperature control is maintained during the composting process.

6. Covering the upper third of the windrow with either 3 to 6 inches of finished compost, 3 to 6 inches of a stable, carbon rich material such as wood chip, or covering the area with a heavy (20 ml) plastic sheet or tarp.

2.5 Seasonal and Weather Management

Composting can continue year round, even during cold weather. Seasonal and weather variations may require operational adjustments that compensate for the change in weather conditions. The insulation layer covering the windrows should sufficiently buffer the mass of materials in the windrow against temperature variation, and changes in the operation should not be required.

Cold weather can slow the composting process by increasing the heat transfer rate from the composting operation into the atmosphere, but the insulation layer should mitigate this transfer. The lower air temperatures reduce the microbial activity, especially near the surface. This, in turn, decreases the amount of heat generated.

Warm weather enhances water loss due to evaporation from the windrows. Water or recovered leachate should be added if materials become too dry (moisture content drops below 40%). Again, the loss should not be excessive from the windrow, and controls can be implemented by scheduling turning operations or adding moisture as required.

In event excess liquid accumulates on the site because of wet weather or other adverse conditions, that excess liquid (runoff) will be treated by the vegetated buffers located along site boundaries.

2.6 Contingency Plans

1. Equipment Breakdown

In the event of a breakdown of the compost equipment (mixer, loader, screens, etc.), delivery of raw materials from the Craven Ag Service septage/FOG dewatering facility will be suspended until the equipment is repaired or replaced and material passes all VAR and PFRP requirements.

2. Fire

In the case of a fire, immediately notify the local fire department. If employee safety is not compromised, the company pump truck may be utilized to extinguish the fire.

3. Freezing Conditions

Operation in freezing conditions requires inspection of system components to assure cold weather will not produce safety hazards. Additional caution in operation of the loader is necessary during conditions where ice may have formed on the site. Frozen raw materials should not be added to the bulk mixer (Knight) due to the possibility of damaging the mixer blades and auger.

4. Extended Power Failure

Operations during an extended power failure may be accomplished by the use of a portable generator for any system components requiring electricity. No critical process equipment requires electricity and a power loss will not impact operation of the equipment either on the site or proposed. Temperature monitoring of the composting windrows during a power failure must be continued, and any compost which does not meet the temperature criteria must be re-processed. Again, no critical equipment requires electricity.

5. Windy Conditions

Windy conditions should have little effect on the composting operation since windrows are located in open areas surrounded by trees. However, during excessively windy conditions (over 25 MPH) special attention must be given while turning the windrows and during the loading of raw materials (especially light materials such as sawdust) which could tend to "blow off" the composting area. It is anticipated that the local vegetation (tree line) will tend to block a great deal of the wind from the facility. However, if windy conditions are demonstrated to have a detrimental effect on the continued processing of the compost, consideration will be given to planting additional windbreaks.

6. Disposal or Re-Processing of Poor Quality Products

The design team anticipates that the compost produced at this facility will easily meet the standards for Class A compost. In the event that a batch of compost does not meet the requirements for Class A compost, several options exist. An initial option would be to re-process the batch in an attempt to meet the Class A compost requirements. This option would be selected if the controlling factor indicating poor quality was pathogen reduction.

Compost materials which do not meet Class A compost requirements but meet the Class B or PSRP compost may be land applied under specific circumstances in accordance with a separate permit. Specifically, these materials could be applied to agricultural land, provided the land is used for silvicultural or non-food chain related production, or the material could be used for land reclamation projects. Compost which does not meet either Class A or Class B criteria, and is deemed undesirable for any attempt at re-processing, will be disposed of in an appropriate approved, sub-part D landfill site such as CRSWMA.

3.0 Equipment Specifications

The equipment required to operate the Craven Ag Service Composting Site can be characterized as either processing or monitoring equipment.

3.1 Processing Equipment

The primary processing equipment currently utilized at the site for composting is a Loader to serve as a Compost Windrow Turner, a mixer to assure feedstocks are properly mixed prior to placement in the windrow and a screen to assure high quality end product is generated. The windrow turning is achieved by lifting and cascading compost to allow reaeration. Equipment may change with time, but basic functions associated with each will remain as critical to the process. Equipment may be replaced with like equipment and new equipment will be reported to NCDWM as it is obtained.

A rubber tired Loader and a dump truck will be used to transport the raw compost mix to the windrows. Finished compost shall be transported by loader or dump truck to the curing area and ultimately to the finish product storage area (Area 4) and segregated into batches in the storage area. Final screening will be accomplished in a rotating screen as material is transported off site or as finished/cured material is placed into storage. Large screened particles (over 1.5 inch diameter) will be reused in the compost operation as bulking material. This coarse material will be moved to the initial mix/blend area and reused to inoculate incoming material and facilitate aeration in the process.

3.2 Monitoring Equipment

A probe-type dial stem thermometer (as manufactured by REOTEMP) with a 36" stainless steel stem is currently used to measure the temperature of the compost in the windrows or compost piles in the active compost production area (area 2). The thermometer has a temperature range of 0-200 degrees Fahrenheit. CAS has several thermometers available on site. These will be calibrated annually and replacement thermometers will be purchased as needed. Calibration of all thermometers shall be accomplished annually.

An additional, optional device that can prove very useful in the production of compost is a moisture meter. This device is more accurate than the "hand squeeze" method of moisture determination. REOTEMP Instrument Corporation has developed a moisture meter which determines moisture levels via a sensor that measures electrical conductivity of the raw materials. The device is available in lengths of 36", 48", and 60". CAS has purchased this process monitoring device and has been using it throughout the demonstration process.

Equipment specifications for the equipment discussed above can be found in Appendix 2.

4.0 Nutrient Management Plan

The majority of the compost produced by the Composting Facility will ideally be sold as a soil amendment. Additional or excess compost will be sold in bulk to local greenhouses and landscape contractors for use as a soil amendment or to the NCDOT for use in highway landscape projects.

In the event of a long term market decline, it may be desirable to land apply some compost off-site. In this case, the material must be a Class A product, or an approval from the NCDWM must be obtained. Land application to agricultural cropland may be used as long as appropriate records are maintained. Compost application rates will vary depending on the agronomic needs of the crop and whether the compost is being used as a primary nutrient source. If the finished compost is used as a primary nutrient source, it should be spread following agronomic practices used for spreading manure. However, compost is generally spread onto land at a thickness of 0.5 to 1 inch. If it is applied at a rate greater than this, it becomes too difficult to incorporate into the soil. Conventional manure spreaders are ideal for handling and spreading compost. The distribution and marketing guide described as CAS Compost Quality and Use should be followed by end users.

5.0 Compost Record Keeping, Analysis and Reporting Requirements

The compost produced at the Craven Ag Service Compost Facility will be routinely analyzed to insure quality control is maintained. Analysis shall be conducted by the North Carolina Department of Agriculture (NCDA), Soil Test Laboratory on Blue Ridge Road in Raleigh, or by a certified analytical laboratory (A and L, Prism Laboratories, Southern Testing, etc.). The compost will be monitored for temperature daily to insure vector and pathogen reduction compliance (see record keeping forms in Appendix 1). An annual report will be submitted to the

NC Solid Waste Section by August 1st of each year, in compliance with NCAC 13B Section .1408 (c). All records will be kept on site.

5.1 Daily Record Keeping

The compost facility will maintain daily (except Sunday) temperature, compost processing length and daily volume of compost processed records for the composting operation. In addition, the volumes of the various feedstocks will be recorded to ascertain the optimum mix and blend ratios for the continued operation at this facility. Each day's production will be flagged as it is transported from the mix/blend area to the windrow. Each section of windrow will be identified with the day of mixing and placement and these areas will be tracked through the entire process. Each area within the windrows will be monitored for temperature and turn date to assure the 15 day/131 degree/5 turning requirements are met. In addition, once a windrow is completed, similar records will be developed until the time requirement is met for the entire windrow. The existing recordkeeping program has indicated the PFRP compliance is addressed by the ongoing program.

5.2 Routine Compost Sampling Procedure

The compost must be sampled at intervals of once per every 20,000 tons of compost produced or every six (6) months, whichever comes first; for purposes of this project more frequent testing shall be accomplished (every 10,000 T) and every quarter. Composite samples are to be collected through the sample period and composited for final testing. A minimum of three 100 Ml composites will be through the period, refrigerated and composited for nutrient and metal analysis. Bacteria samples will be collected in accord with test laboratory procedures. The sample tested is to be a representative sample of the compost produced during the compost cycle.

The samples will be obtained in a sterile manner according to the following procedure. The sample will be obtained from the batch of finished compost from piles, immediately prior to the screening and bagging equipment. The sample will consist of a multiple position composite grab sample. A minimum of 5 discrete locations within the finished compost pile in Area 3, immediately prior to the screening /bagging and bulk loading processing of the pile, will be sampled as a composite sample.

These sample locations will be taken from within the finished pile, and will represent a "cross section" of the pile, not just the "surface". The sampling will be conducted wearing latex or nitrile gloves, and the composite samples will be well mixed to insure a representative sample is tested. Samples will be refrigerated immediately or placed in sealed containers in a cooler for transport to the laboratory. Collected composite samples will be placed in sterile bags provided by the laboratory when pathogen samples are to be run on the material. Samples shall be delivered to the laboratory within 24 hours if pathogen testing is to be performed. It is essential to coordinate with the laboratory ahead of sampling to insure that the proper "hold times" for the various parameters to be tested are not exceeded. It may be desirable to run intermediate nutrient and heavy metal content samples at a more frequent interval than the once every 20,000 tons as specified by regulation and CAS has agreed to accomplish testing at a more frequent basis.

5.3 Routine Compost Analysis

The analysis must include the parameters listed in Table 2. Metal testing must comply with measurements less than the regulatory limits in 40 CFR part 503, Table 3 based on dry weight (mg/kg). Testing shall be conducted by private certified laboratories for regulated metals and bacteria. NCDA testing is adequate for nutrients, metals as process (non-compliance) values and foreign matter can be tested by trained personnel.

Foreign matter testing will be determined as follows. The compost material will be dried (EPA Method 160.3), weighed and passed through a one quarter inch (1/4") screen. All materials remaining on the screen will be visually inspected and all foreign material (glass, plastic, metal, etc.) will be removed and weighed. The weight of the removed foreign material, divided by the weight of the total dried sample, multiplied by 100% will be recorded and reported as the percentage foreign material observed in the sample.

Table 2. Routine Compost Analysis Requirements

Parameter	Reporting Unit	Test Method
Foreign Matter	%	As described in Subparagraph (5) of 13B Section .1408
Cadmium	mg/kg dry weight basis	EPA Standard Methods 3050/3051
Copper	mg/kg dry weight basis	"
Lead	mg/kg dry weight basis	"
Nickel	mg/kg dry weight basis	"
Zinc	mg/kg dry weight basis	"
Pathogens (Fecal Coliform)	MPN/1000 grams of Sample	Standard Methods for the Examination of Water and Wastewater, Part 9221 E or Part 9222 D
Total Kjeldahl Nitrogen*	%	NCDA
Phosphorus*	%	NCDA
Potassium*	%	NCDA
Salts*		NCDA Standard Analysis

* Not required by statute, but these analyses provide useful information on product quality

5.4 Annual Report

Craven Ag Service will submit an annual report to the NC Solid Waste Section by August 1st of each year, in compliance with NCAC 13B Section .1408 (c). The annual report will contain the facility name, address, permit number, a summary of the total quantities of raw material received at the facility, the total quantity of compost produced by the facility, and the total quantity of compost removed from the facility (marketed or disposed of off-site). The annual report will also include temperature monitoring records and the results of the required analysis for metals, pathogen reduction analysis (fecal coliform), and for the percentage of foreign matter in the finished compost.

6.0 Safety & Health

Proper attention to health and safety at composting facilities can prevent most occupational risks. The safety concerns in composting relate primarily to the use of equipment. If front-end loaders or other standard farm equipment is used, eye and ear protection should be used. Normal safety precautions, such as those provided with the equipment, should be followed. The Farm Safety Association has developed a fact sheet (No. F-017 - Agricultural Machinery Hazards - See Appendix 3) which should be reviewed by all personnel operating or working near machinery.

Fires are rarely a problem in outdoor composting, as properly moist composting material does not readily burn. However, if material does dry out and if storage piles are too large, spontaneous combustion becomes a possibility. This phenomenon occurs at moisture contents approximately between 25% and 45%. In piles over 12 feet high, it is possible for the internal heat of the compost to initiate chemical reactions, which then lead to spontaneous combustion. Proper attention to moisture, temperature, and pile size is the best protection against this problem. An accessible water supply is a valuable safety precaution.

Human health concerns relating to compost depend both on the individual and on the material being composted. While few pathogenic organisms found in farm animal manures or vegetative wastes affect humans, normal sanitary measures are important (such as washing hands before touching food, eyes, etc.). Some individuals may be hyper-sensitive to some of the organisms in compost. The high population of many of the species of mold and fungi in an active compost process can cause allergic reactions in sensitive individuals. Simple precautions, such as wearing dust masks or even half-mask respirators with disposable cartridges, can help limit human exposure to organisms that may cause allergic reactions. Conditions which may predispose individuals to an infection or allergic response include allergies, asthma, such medication conditions such as antibiotics, punctured eardrum, weakened immune system, adrenal cortical hormones, etc. Workers with any of these conditions should not be assigned to a composting operation. If a worker does develop an allergic reaction to compost, it is important to recognize the problem promptly so that it does not develop into a chronic condition. To prevent health concerns during particularly dry and dusty conditions, a dust mask or half mask respirators should be worn.

Blood borne pathogen testing should be accomplished on employees of the compost operation as a part of the annual physical.

With proper knowledge, equipment, caution, and precautions, these sources of harm can be removed or limited, and injuries, illnesses, and deaths can be prevented.

Memo from: A. R. Rubin

Subject: CAS permit requests from Donna Wilson

To: Zach Fuller and Billy Dunham

Ms. Wilson requested additional information to complete the permit. I have included a table listing the characteristic of the ash and the metal load with a 2 inch lift of the ash applied per acre. I have also described the procedure to follow with the ash and fine compost incorporation to achieve the "finer than fine sand" designation required. Lastly, I have made required changes to the operations manual.

Coal ash and associated metal loading Criteria:

The coal ash collected on the site was tested to determine the levels of regulated metal and the TCLP metal levels as required. The total regulated metal levels are higher than the TCLP metal levels simply because the rigor of the test is greater for a total metal analysis than for a TCLP extraction. For purposes of creating a layer of material "finer than fine sand" a layer of ash approximately 2 inches thick and a layer of fine compost between 1 and 2 inches thick will be added to the compost windrow areas designated in the application.

For purposes of this application, the weight of the ash is 80 pounds per cubic foot. The ash load required to apply a lift 2 inches in dept to an acre of pad area is calculated as:

a. Each cubic yard of ash applied to achieve a 2 inch lift will cover an area of –
    1. Each cubic foot of ash applied as a 2 inch lift will cover 6 square feet
    2. Each cubic yard of ash will cover 27 ft cu/yd x 6 ft sq/ft cu = 162 square ft/yd
    3. Each acre of pad area will require 43560 sq ft/ac/162 ft sq/yd = 269 yds cu/ac or 295 tons/ac at a density of 80 lb/ft cu.
b. Testing indicates the metal concentrations are low. Based on the MicroBac test results utilized previously the metal loading in a 295 ton/ac application is provided in the table below.

Coal Ash Metal testing and Loading if applied at 295 T/Ac– Craven Ag

Metal	EPA Clean	EPA Load (lb/ac)	Coal Ash Level	Mass (lb)/T	Metal load @ 295 T/A*
As	41	37	2.1	0.004	1.18
Cd	39	35	0.2	0.0004	0.12
Cr	1200	2678	2.2	0.004	1.18
Cu	1500	1339	7.4	0.015	4.43
Pb	300	268	2.1	0.004	1.18
Hg	17	15	0.04	0.0001	0.03
Ni	420	375	6	0.012	3.54
Se	36	89	0.96	0.002	0.59
Zn	2800	2500	2.9	0.006	1.77

Clearly all metal loadings are well below the cumulative metal loading allowed in the EPA Rules and in NC DWM Rule. Metal loadings are not a limitation in the design of the pad system required to create a soil texture finer than fine sand.

Incorporation of compost fines and coal ash

The site to be used as the compost pad is listed as the 1.8 acre area intended to store incoming feedstock and potentially serve as an initial compost production area and the large 4.7 acre area intended to support the bulk of the compost activity. The 4.7 acre area constitutes that portion of the overall site on which windrows will be constructed and managed to achieve the PFRP and VAR designation required in rule.

These areas have been tested previously and were found to contain soil characterized as fine sand; rule requires soil material classified as finer than fine sand. To achieve that both compost fines and coal ash will be added to the site in accord with the following procedure:

a. Compost fines will be applied to the site in a lift of 1 to 2 inches and these compost fines will be incorporated into the topsoil to a depth of approximately 6 inches using standard implements – disk, plow, roto-tiller.
b. Once the compost fines are incorporated to the recommended depth, layers or lifts of the coal ash will be placed on the soil surface and incorporated into the soil to a depth of 6 inches using standard implements-disk, plow, roto-tiller. The lift proposed in a series of two operations, each applying and incorporating a 1 inch lift.
c. Once these fine materials are incorporated, soil material will be assessed by sampling the soil to a depth of 12 inches and determining soil texture using ASTM procedure (D 422.63). A series of 20 sub-samples will be collected from each acre prepared to serve as a compost pad. Each subsample will be collected randomly from the site with a minimum distance between samples of 25 feet. Sub-samples will be composited and tested at the Soil Science Department at NCSU or an approved laboratory.

NCDENR
North Carolina Department of Environment and Natural Resources
Division of Energy, Mineral, and Land Resources
Land Quality Section

Tracy E. Davis, PE, CPM
Director

Pat McCrory, Governor
John E. Skvarla, III, Secretary

September 9, 2013

LETTER OF APPROVAL WITH MODIFICATIONS

RECEIVED 9-10-13

Craven Ag Services, LLC
ATTN: Mr. John W. Dunham, President
2155 West Highway 55
New Bern, North Carolina 28562

RE: Erosion and Sedimentation Control Plan No. Crave-2012-003
Project Name: Craven Ag Services Composting Facility
Location: River Road (SR 1400) County: Craven
River Basin: Neuse
Date Received by LQS: August 27, 2013
Acres Approved: 7.9 Project Type: Revised
Project Description: Grading associated with the development of a composting facility, as shown on the plan received by this office on August 27, 2013.

Dear Sir:

This office has reviewed the subject erosion and sedimentation control plan. We find the plan to be acceptable and hereby issue this Letter of Approval with Modifications. The modifications required for approval are listed on the attached pages. This plan approval shall expire three (3) years following the date of approval, if no land-disturbing activity has been undertaken, as required by 15A NCAC 4B.0129, unless modified by other legislation.

Please be advised that 15A NCAC 4B.0118(a) requires that a copy of the approved erosion and sedimentation control plan be on file at the job site. Also, you should consider this letter as giving the Notice required by G.S. 113A-61.1(a) of our right of periodic inspection to ensure compliance with the approved plan.

North Carolina's Sedimentation Pollution Control Program is performance oriented, requiring protection of existing natural resources and adjoining properties. If, following the commencement of this project, it is determined that the erosion and sedimentation control plan is inadequate to meet the requirements of the Sedimentation Pollution Control Act of 1973 (G.S. 113A-51 through 66), this office may require revisions to the plan and implementation of the revisions to ensure compliance with the Act.

Acceptance and approval of this plan is conditioned upon your compliance with Federal and State water quality laws, regulations and rules. In addition, local city or county ordinances or rules may also apply to this land-disturbing activity. This approval does not supersede any other permit or approval.

Please note that this approval is based in part on the accuracy of the information provided in the Financial Responsibility/Ownership Form, which you have submitted. You are required to file an amended form if there is any change in the information included on the form. NOTE: Neither this approval nor the financial responsibility/liability cited in it automatically transfer with a change in project ownership. In addition, 15A NCAC 4B.0127(c) requires that you notify this office of the proposed starting date for this project (using the enclosed Project Information Sheet). Please notify us if you plan to have a preconstruction conference.

Please be advised that a rule to protect and maintain existing buffers along watercourses in the Neuse River Basin became effective on July 22, 1997. The Neuse River Riparian Area Protection and Maintenance Rule (15A NCAC 2B.0233) applies to the 50-foot wide zone directly adjacent to surface waters (intermittent streams, perennial streams, lakes, ponds, and estuaries) in the Neuse River Basin. For more information about this riparian area rule, please contact the Division of Water Quality's Wetland/401 Unit at 919-807-6300, or DWQ in our regional office at 252-946-6481.

Please be aware that your project will be covered by the enclosed NPDES General Stormwater Permit NCG010000 (Construction Activities). You should first become familiar with all of the requirements for compliance with the enclosed permit.

Sincerely,

Richard Peed, CPESC
Assistant Regional Engineer

Enclosures

cc w/o enc: Gary S. MacConnell, P.E., MacConnell & Associates, P.C.
WaRO Water Quality Supervisor, Division of Water Resources

1. **AS THE DECLARED RESPONSIBLE PARTY, YOUR LEGAL RESPONSIBILITY** is to understand the Act and comply with the following minimum requirements of the Act:

   A. In the event of a conflict between the requirements of the Sedimentation Pollution Control Act, the submitted plan and/or the contract specifications, the more restrictive requirement shall prevail;

   B. The land-disturbing activity shall be conducted in accordance with the approved erosion and sedimentation control plan;

   C. The **LATEST APPROVED** erosion and sediment control plan will be used during periodic unannounced inspections to determine compliance and a copy of the plan must be on file at the job site. If it is determined that the implemented plan is inadequate, this office may require the installation of additional measures and/or that the plan be revised to comply with state law;

   D. All revisions, including those required by other local, state or federal agencies, which affect site layout, drainage patterns, limits of disturbance and/or disturbed acreage must be submitted to this office for approval a minimum of 15 days prior to the start of construction;

   E. Revisions exceeding the approved scope of this project without prior approval of the plan showing the changes can be considered a violation. Failure to comply with any part of the approved plan or with any requirements of this program could result in appropriate legal action (civil or criminal) against the financially responsible party. Legal actions include Stop Work Orders and the assessing of a civil penalty of up to $5000 for the initial violation plus an additional penalty of up to $5000 per day for each day the site is out of compliance;

   F. The **CERTIFICATE OF PLAN APPROVAL must be posted** at the primary entrance to the job site and remain until the site is permanently stabilized;

   G. In cases of natural disaster related changes to the proposed land disturbing activity, all appropriate actions and adequate measure installations may be performed to prevent sediment damage, prior to submitting and receiving approval of the revised plan. A revised plan must be submitted for approval as soon as possible, but no later than 15 days after all emergency actions have been performed;

H. Erosion and sediment control measures or devices are to be constructed and/or installed to safely withstand the runoff resulting from a 10 year storm event (25 year storm event in High Quality Zones). The 10 year storm event is generally equivalent to a storm producing 6.5 - 7 inches of rain in 24 hours or at the rate of 6.5 - 7 inches of rain in 1 hour, depending on the location of the project within the region;

I. No earthen material is to be brought on or removed from the project site, until the off-site borrow and/or disposal sites are identified as part of the erosion control plan. If an off-site borrow and/or disposal site is to be utilized, prior to the start of construction submit the name and identification number (E&SCP # or Mine Permit #) using the enclosed Project Information Sheet;

J. Buffer zone, sufficient to restrain visible sedimentation within the 25% of the width closest to the land disturbance, must be provided and maintained between the land-disturbing activity and any adjacent property or watercourse;

K. In order to comply with the intent of the Act, the scheduling of the land-disturbing activities is to be such that both the area of exposure and the time between the land disturbance and the providing of a ground cover is minimized;

L. Unless a temporary, manufactured, lining material has been specified, a clean straw mulch must be applied, at the minimum rate of 2 tons/acre, to all seeded areas. The mulch must cover at least 75% of the seeded area after it is either tacked, with an acceptable tacking material, or crimped in place;

M. New or affected cut or filled slopes must be at an angle that can be retained by vegetative cover, AND **must be provided with a ground cover** sufficient to restrain erosion **within 21 calendar days of completion of any phase (rough or final) of grading** (**ANNUAL RYE GRASS IS NOT** in the **APPROVED** seeding specifications **NOR** is it an **ACCEPTABLE** substitute for the providing of a temporary ground cover);

N. A **permanent ground cover**, sufficient restrain erosion, **must be provided** within the shorter of 15 working or 90 calendar days (if in a High Quality Zone, the shorter of 15 working or 60 calendar days) after completion of construction or development on any portion of the tract (**ANNUAL RYE GRASS IS NOT** in the **APPROVED** seeding specifications **NOR** is it an **ACCEPTABLE** substitute for the providing of a nurse cover for the permanent grass cover);

O. All sediment and erosion control details for this project must conform to the standards as shown in the current Erosion & Sediment Control Planning and Design Manual; these details must be utilized for construction and incorporated in the plan. The manual can be found online at http://portal.ncdenr.org/web/lr/publications

2. Adequate and appropriate measures must be properly installed downstream, within the limits of disturbance, of any land disturbing activity to prevent sediment from leaving the limits of disturbance, entering existing drainage systems, impacting an on-site natural watercourse or adjoining property.

PROJECT INFORMATION SHEET

APPROVAL DATE: September 9, 2013

RESPONSIBLE PARTY: Craven Ag Services, LLC

PROJECT NAME: Craven Ag Services Composting Facility

COUNTY: Craven NO.: Crave-2012-003

OFF-SITE BORROW
AND/OR DISPOSAL SITE: NO.:

START-UP DATE:

CONTRACTOR:

ON-SITE CONTACT:

ON-SITE PHONE NO.:

OFFICE PHONE NO.:

COMPLETE & RETURN THIS FORM
PRIOR TO THE START OF CONSTRUCTION TO:

N.C.D.E.N.R.
LAND QUALITY SECTION
ATTN: *Allison Ward*
943 WASHINGTON SQUARE MALL
WASHINGTON, NORTH CAROLINA 27889

CERTIFICATE OF PLAN APPROVAL

The posting of this certificate certifies that an erosion and sedimentation control plan has been approved for this project by the North Carolina Department of Environment and Natural Resources in accordance with North Carolina General Statute 113A – 57 (4) and 113A – 54 (d) (4) and North Carolina Administrative Code, Title 15A, Chapter 4B.0107 (c). This certificate must be posted at the primary entrance of the job site before construction begins and until establishment of permanent groundcover as required by North Carolina Administrative Code, Title 15A, Chapter 4B.0127 (b).

SR 1400 - CRAVEN AG COMPOSTING FACILITY - CRAVEN COUNTY

Project Name and Location

9/9/2013

Date of Plan Approval

NCDENR

P.H. McLAIN

Regional Engineer

CRAVE-2012-003

CAS Compost Quality, Distribution and Use

Feedstock materials: Craven Ag Service has been producing high quality compost from a variety of waste or by product materials generated in the Coastal Plain of North Carolina. The feedstocks utilized in the compost include regulated waste materials (septage and fats, oils and grease), agribusiness wastes, and yard waste. The compost is tested and monitored and all sampling indicates the compost produced meets the most stringent regulatory requirements imposed by federal and state agencies and the end product is suited for broad use. The end product meets all criteria established in rule for unrestricted use. Unrestricted use does mean that the product is utilized at appropriate rates. Appropriate rate is dependent on the site and soil conditions, the crop to be grown, the season when the compost is used and whether the compost is applied onto the soil surface or lightly incorporated into soil. For most uses, the recommended loading is as described below. For higher applications, a nutrient plan should be developed.

Sample testing: CAS samples the composted material daily to assure compliance with regulatory requirements. Temperatures are important in compost production and all temperature monitoring accomplished indicates the temperatures within the compost windrows exceed 140 degrees F. This assures pathogens and weed seeds are eliminated.

Testing indicates nutrient levels as presented in the table below.

	Test results	Pounds per ton
Nitrogen	3.0%	30 (allows 50% for mineralization)
Phosphorus	0.5%	10
Potassium	1%	20

Typical loadings for the compost should supply nutrients required for specific cropping systems and should be based on soil test data. In general, 3 to 5 tons of compost applied per acre will provide required nutrients for crops typical in the Coastal Plain.

Compost generated at Craven Ag is suitable for use in gardens, landscaped areas, lawn and turf settings, or agricultural production – any application where organic matter or nutrients are required to support plant growth or improve soil quality. If the compost is used in garden settings, the loading is as described above – 3 to 5 tons per acre; this is equivalent to 25 pounds per 100 square feet in garden settings. If used in gardens the compost should be spread uniformly onto the soil surface using a fertilizer spreader and lightly tilled into the soil. Home gardeners are encouraged to test soil annually and add amendments as recommended. The NCDA provides outstanding soil test service and the local or county office of the Extension Service can assist with any garden questions.

If the compost is applied to agricultural lands, the application should be based on a nutrient management plan incorporating information on specific crops and site specific soils information. Assistance with development of a nutrient plan is available through the local Extension Service Office.

CRAVEN AG SERVICES, INC.

COMPOST FACILITY

CRAVEN COUNTY, NC

PROJECT No. A45201.00

VICINITY MAP

SCHEDULE OF DRAWINGS:

	COVER SHEET
C-101	SITE PLAN
C-102	SITE LAYOUT
C-103	STORMWATER/SEDIMENTATION & EROSION CONTROL PLAN LAYOUT 1 OF 2
C-104	STORMWATER/SEDIMENTATION & EROSION CONTROL PLAN LAYOUT 2 OF 2
D-101	DETAILS
D-102	MIXING PAD DETAILS

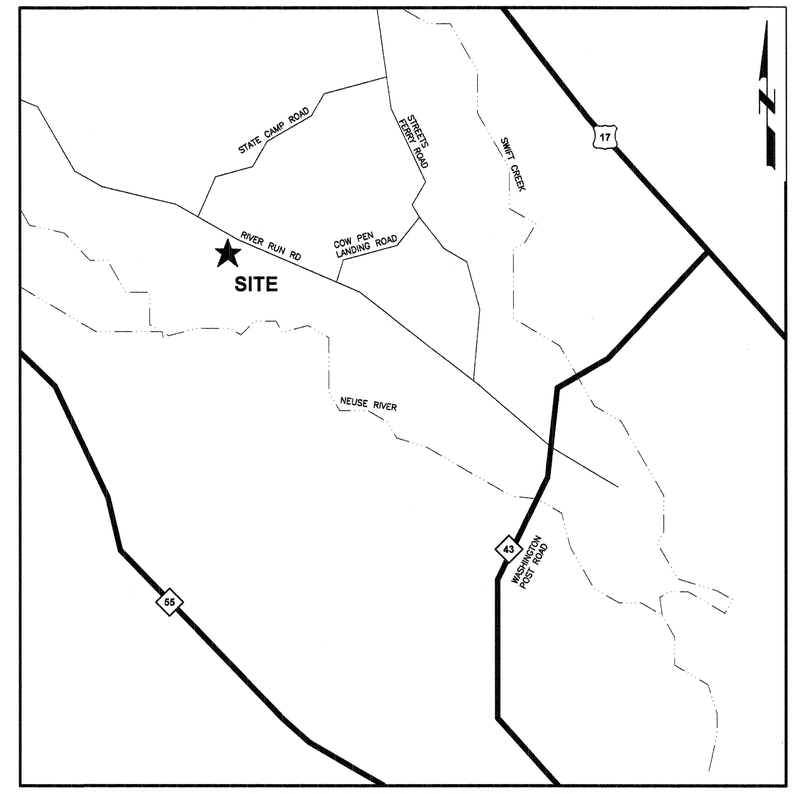

LOCATION MAP

A. R. Rubin, Ed.D.
President

A. R. Rubin and Associates
sustainable environmental solutions

192 fearrington post
pittsboro, nc, 27312

919 545 3066
919 270 0344

MacCONNELL
& Associates, P. C.
1903 NORTH HARRISON AVE., SUITE 102
CARY, NC 27513
P. O. BOX 129
MORRISVILLE, NC 27560
TEL: (919) 467-1239 FAX: (919) 319-6510

NORTH CAROLINA PROFESSIONAL SEAL 17069 ENGINEER GARY S. MacCONNELL 11/21/13

PROJECT MANAGEMENT

COPYRIGHT © 2011

JUNE 28, 2011

REVISIONS

NO.	DATE	DESCRIPTION	SHEET
1	08/08/11	REV. PER LQS	ALL
2	02/29/12	REV. PER SWS	ALL
3	12/03/12	REV. PER SWS	ALL
4	08/14/13	REV. PER LQS, SWS	C-101,2,3,4 D-101
5	11/21/13	REV. PER SWS	C-101,2,3,D-101

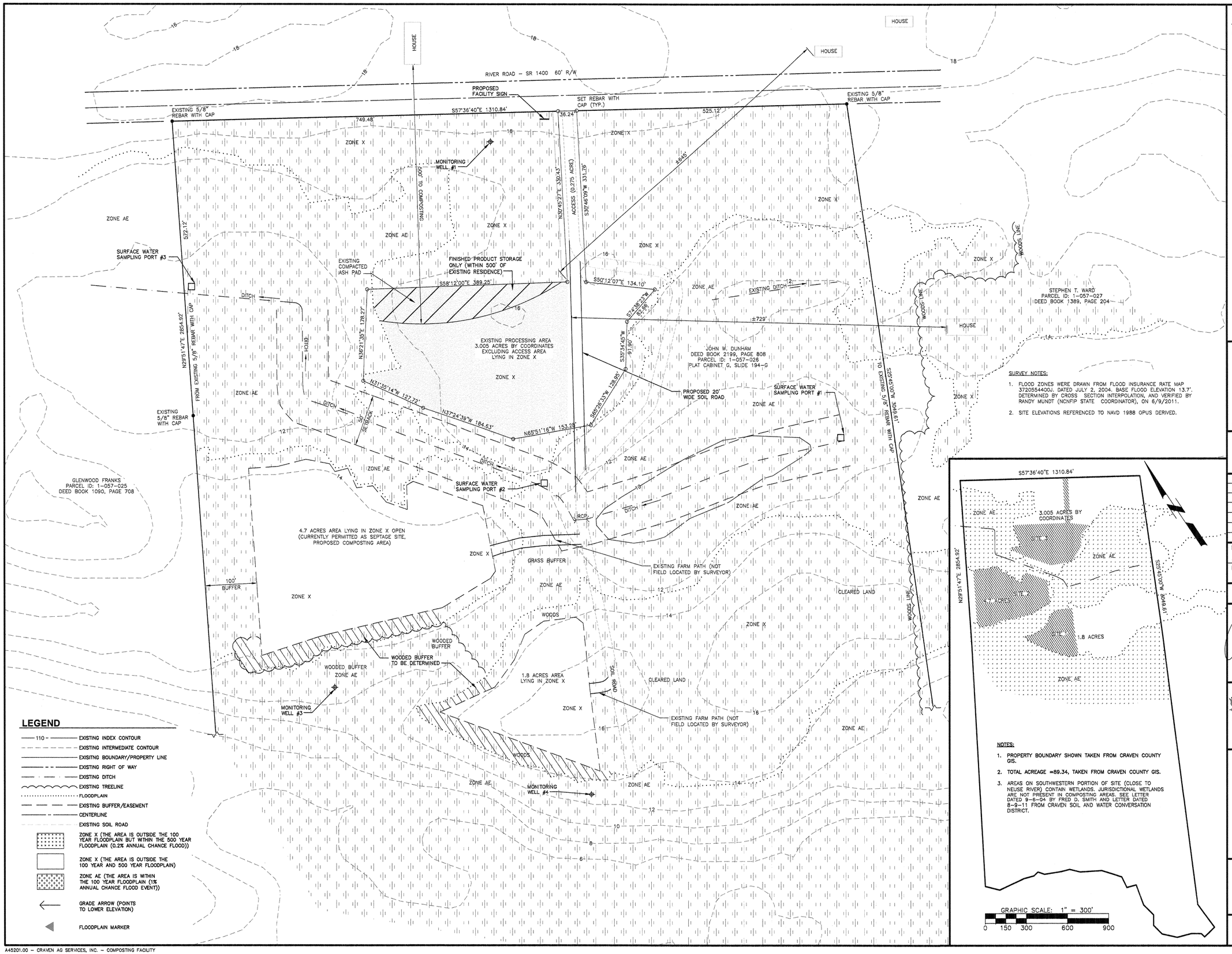

LEGEND

- 110 — EXISTING INDEX CONTOUR
- EXISTING INTERMEDIATE CONTOUR
- EXISITNG BOUNDARY/PROPERTY LINE
- EXISTING RIGHT OF WAY
- EXISTING DITCH
- EXISTING TREELINE
- FLOODPLAIN
- EXISTING BUFFER/EASEMENT
- CENTERLINE
- EXISTING SOIL ROAD
- ZONE X (THE AREA IS OUTSIDE THE 100 YEAR FLOODPLAIN BUT WITHIN THE 500 YEAR FLOODPLAIN (0.2% ANNUAL CHANCE FLOOD))
- ZONE X (THE AREA IS OUTSIDE THE 100 YEAR AND 500 YEAR FLOODPLAIN)
- ZONE AE (THE AREA IS WITHIN THE 100 YEAR FLOODPLAIN (1% ANNUAL CHANCE FLOOD EVENT))
- GRADE ARROW (POINTS TO LOWER ELEVATION)
- FLOODPLAIN MARKER

NOTES

1. SURVEY PROVIDED BY:
   MAYO & ASSOCIATES, P.A. LAND SURVEYING
   10121 US HWY 17 SOUTH
   VANCEBORO, NC 28586
   DATED: JUNE 17, 2011
2. TOPOGRAPHY TAKEN FROM NCDOT LIDAR.
3. MACCONNELL & ASSOCIATES UTILIZED THE DATA AND THE EQUIPMENT INFORMATION TO DESIGN SITE DETAILS FOR THIS FACILITY. CONTRACTOR SHALL VERIFY ALL DIMENSIONS, ELEVATIONS, AND UTILITIES BEFORE BEGINNING ANY CONSTRUCTION.
4. CONTRACTOR SHALL COMPLY WITH ALL APPLICABLE SOIL EROSION AND SEDIMENTATION CONTROL REQUIREMENTS OF THE COUNTY AND STATE.
5. CONTRACTOR SHALL COMPLY WITH ALL APPLICABLE OSHA AND SAFETY REQUIREMENTS OF THE COUNTY AND STATE.
6. ADJACENT RESIDENCE LOCATIONS ARE APPROXIMATE AND WERE LOCATED USING THE CRAVEN COUNTY GIS WEBSITE.

COPYRIGHT © 2011

A. R. Rubin, Ed.D.
President

A. R. Rubin and Associates
sustainable environmental solutions

192 fearrington post
pittsboro, nc, 27312
919 545 3066
919 270 0344

SURVEY NOTES:

1. FLOOD ZONES WERE DRAWN FROM FLOOD INSURANCE RATE MAP 3720554400J, DATED JULY 2, 2004. BASE FLOOD ELEVATION 13.7', DETERMINED BY CROSS SECTION INTERPOLATION, AND VERIFIED BY RANDY MUNDT (NCNFIP STATE COORDINATOR), ON 5/9/2011.
2. SITE ELEVATIONS REFERENCED TO NAVD 1988 OPUS DERIVED.

GRAPHIC SCALE: 1" = 80'
0 40 80 160 240

NOTES:

1. PROPERTY BOUNDARY SHOWN TAKEN FROM CRAVEN COUNTY GIS.
2. TOTAL ACREAGE =89.34, TAKEN FROM CRAVEN COUNTY GIS.
3. AREAS ON SOUTHWESTERN PORTION OF SITE (CLOSE TO NEUSE RIVER) CONTAIN WETLANDS. JURISDICTIONAL WETLANDS ARE NOT PRESENT IN COMPOSTING AREAS. SEE LETTER DATED 9-6-04 BY FRED D. SMITH AND LETTER DATED 8-9-11 FROM CRAVEN SOIL AND WATER CONVERSATION DISTRICT.

GRAPHIC SCALE: 1" = 300'
0 150 300 600 900

REVISIONS

NO.	DATE	DESCRIPTION
1	08/08/11	PER LQS
2	02/29/12	PER SWS
3	12/03/12	PER SWS
4	08/14/13	PER LQS, SWS
5	11/21/13	PER SWS

PROJECT MANAGER:	PROJECT ENGINEER:
GSM	ZLF
DRAWN BY: MAE	CHECKED BY: GSM

DATE: JUNE 28, 2011

NORTH CAROLINA PROFESSIONAL SEAL 17069 ENGINEER GARY S. MacCONNELL 11/21/13

MacCONNELL & Associates, P. C.
1903 NORTH HARRISON AVE., SUITE 102
CARY, NORTH CAROLINA 27513
P. O. BOX 129
MORRISVILLE, NORTH CAROLINA 27560
TEL: (919) 467-1239 FAX: (919) 319-6510

CRAVEN AG SERVICES, INC.

COMPOSTING FACILITY

CRAVEN COUNTY, NC

SITE PLAN

PROJECT NUMBER	DRAWING NUMBER
A45201.00	C-101

A45201.00 – CRAVEN AG SERVICES, INC. – COMPOSTING FACILITY

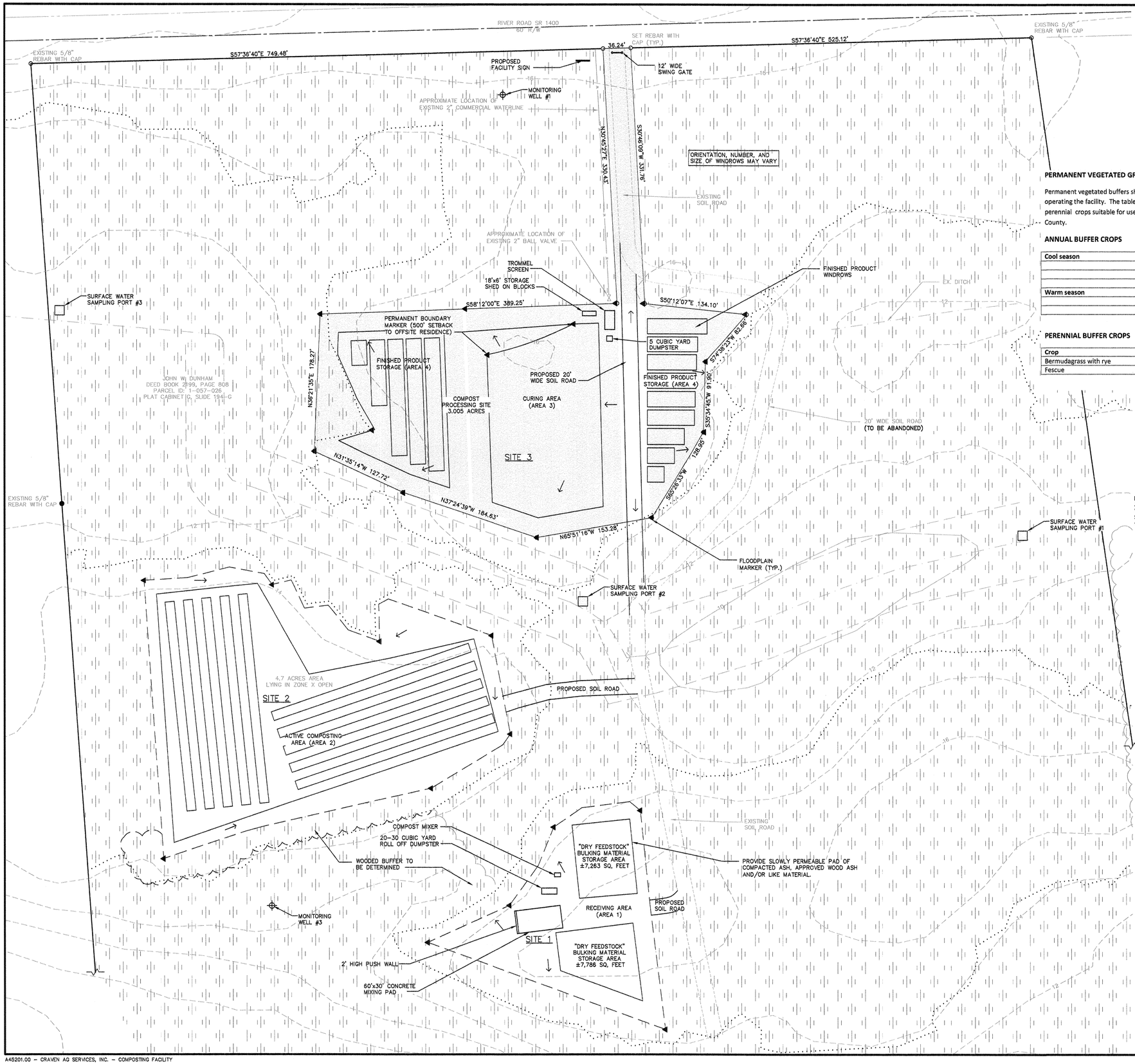

PERMANENT VEGETATED GRASS BUFFERS

Permanent vegetated buffers shall be established downslope of the compost production site prior to operating the facility. The table below lists a variety of cool season and warm season annual and perennial crops suitable for use in the buffer areas and the recommended seeding rate for Craven County.

ANNUAL BUFFER CROPS

Cool season	Crop	Seeding Recommendation
	Annual rye	Broadcast @ 20 lb/ac, drill @10 lb/ac
	Wheat	40 lb/ac
	Oats	Broadcast@ 110 lb/ac, drill @ 80 lb/ac
Warm season		
	Sudan/sorghum	30 lb/ac
	Millet	Broadcast @20 lb/ac, drill @ 10 lb/ac

PERENNIAL BUFFER CROPS

Crop	Seeding Recommendation
Bermudagrass with rye	Bermuda broadcast @ 8 lb/ac, drill @ 5 lb/ac, rye as above
Fescue	Broadcast @ 15 lb/ac, drill @ 10 lb/ac

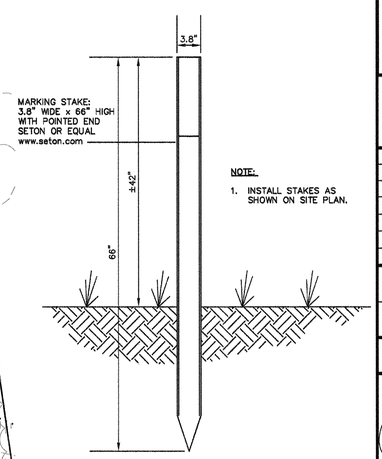

MARKING STAKE:
3.8" WIDE x 66" HIGH
WITH POINTED END
SETON OR EQUAL
www.seton.com

NOTE:

1. INSTALL STAKES AS SHOWN ON SITE PLAN.

FLOODPLAIN AND BOUNDARY MARKER

1 / C-102 SCALE: NTS

LEGEND

- 110 — EXISTING INDEX CONTOUR
- EXISTING INTERMEDIATE CONTOUR
- EXISITNG BOUNDARY/PROPERTY LINE
- EXISTING RIGHT OF WAY
- EXISTING DITCH
- EXISTING TREELINE
- FLOODPLAIN
- EXISTING BUFFER/EASEMENT
- CENTERLINE
- EXISTING SOIL ROAD
- ZONE X (THE AREA IS OUTSIDE THE 100 YEAR FLOODPLAIN BUT WITHIN THE 500 YEAR FLOODPLAIN (0.2% ANNUAL CHANCE FLOOD))
- ZONE X (THE AREA IS OUTSIDE THE 100 YEAR AND 500 YEAR FLOODPLAIN)
- ZONE AE (THE AREA IS WITHIN THE 100 YEAR FLOODPLAIN (1% ANNUAL CHANCE FLOOD EVENT))
- GRADE ARROW (POINTS TO LOWER ELEVATION)
- FLOODPLAIN MARKER

NOTES

1. SEE C-101 FOR GENERAL NOTES.
2. DISTURBED AREAS NOT COVERED BY SLOWLY PERMEABLE PAD OR CONCRETE SHALL BE SEEDED WITH COASTAL BERMUDA, RYE GRASS, OR NATURAL GRASS.
3. FACILITY SIGN SHALL BE A MINIMUM 2'x3' AND INCLUDE THE PERMIT NUMBER, PROHIBITED MATERIALS, AND EMERGENCY CONTACT INFORMATION.
4. BLEND 2"-3" OF COMPOST FINES, 2"-3" OF ASH, WITH NATIVE SOIL FOR A TOTAL THICKNESS OF 6"-9" WITHIN THE ENTIRE BOUNDARIES OF SITES 1, 2, AND 3. MODIFIED SOIL TEXTURE SHALL BE FINER THAN LOAMY SAND IN ACCORDANCE WITH RULE .1404 (c) (10) (B).
5. COMPOST WINDROWS WILL BE ORIENTED TO PROVIDE SHEET FLOW TO RUNOFF PER FINAL GRADING WITH ASH MIXTURE.
6. FLOODPLAIN AND BOUNDARY MARKERS SHALL BE MAINTAINED AT SITE.
7. PROVIDE 50' MINIMUM VEGETATED BUFFER (WOODLAND OR CROPS) AROUND PERIMETER OF SITES 1, 2, AND 3.

COPYRIGHT © 2011

A. R. Rubin, Ed.D.
President

A. R. Rubin and Associates
sustainable environmental solutions

192 fearrington post
pittsboro, nc, 27312
919 545 3066
919 270 0344

GRAPHIC SCALE: 1" = 60'
0 30 60 120 180

REVISIONS

NO.	DATE	DESCRIPTION
1	08/08/11	PER LQS
2	02/29/12	PER SWS
3	12/03/12	PER SWS
4	08/14/13	PER LQS, SWS
5	11/21/13	PER SWS

PROJECT MANAGER:	PROJECT ENGINEER:
GSM	ZLF
DRAWN BY:	CHECKED BY:
MAE	GSM

DATE:
JUNE 28, 2011

NORTH CAROLINA PROFESSIONAL SEAL 17069 ENGINEER GARY S. MacCONNELL
11/21/13

MacCONNELL & Associates, P. C.
1903 NORTH HARRISON AVE., SUITE 102
CARY, NORTH CAROLINA 27513
P. O. BOX 129
MORRISVILLE, NORTH CAROLINA 27560
TEL: (919) 467-1239 FAX: (919) 319-6510

CRAVEN AG SERVICES, INC.

COMPOSTING FACILITY

CRAVEN COUNTY, NC

SITE LAYOUT

PROJECT NUMBER	DRAWING NUMBER
A45201.00	C-102

A45201.00 – CRAVEN AG SERVICES, INC. – COMPOSTING FACILITY

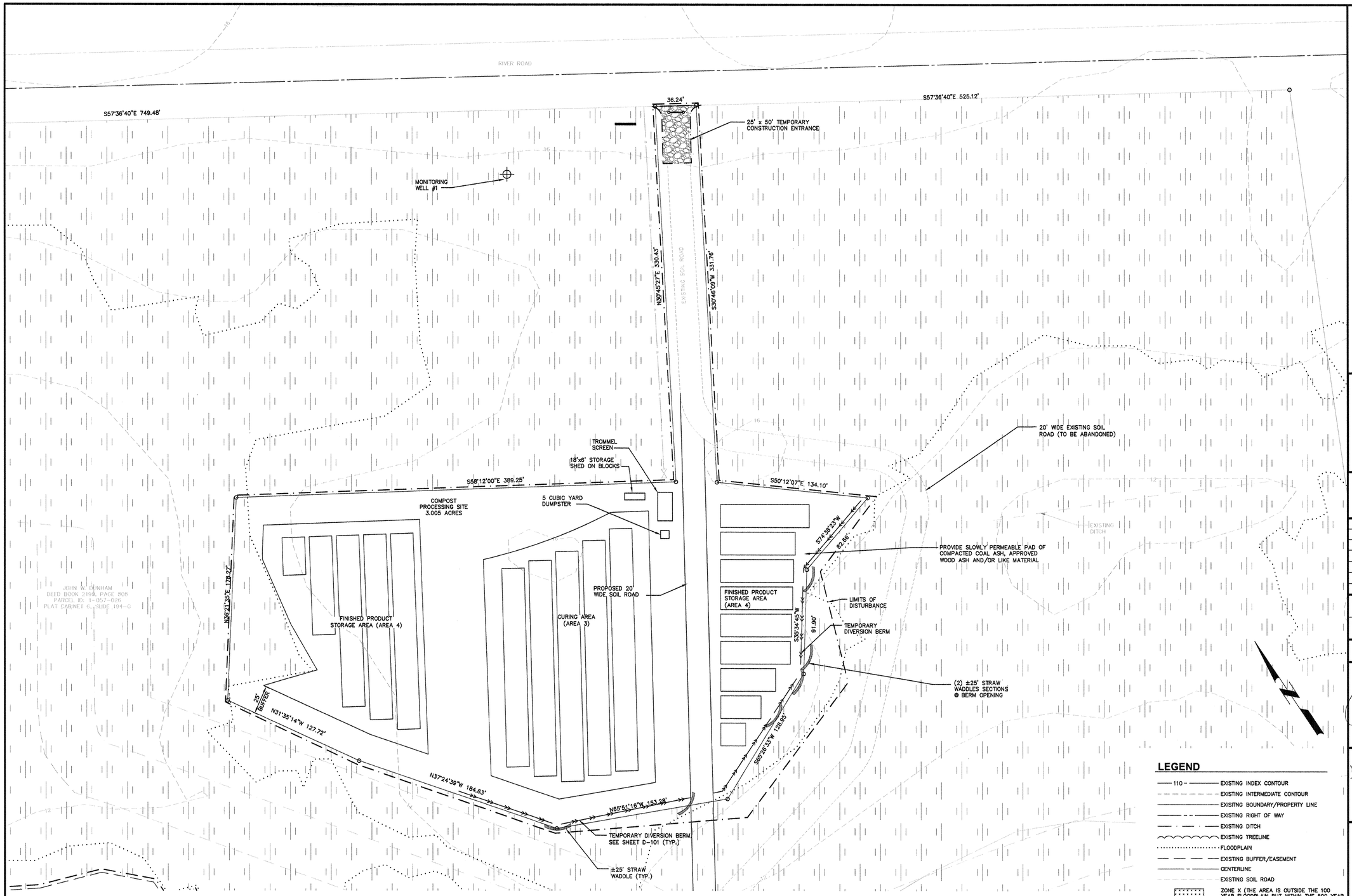

NOTES

1. SEE C-101 FOR GENERAL NOTES.
2. ALL DISTURBED SOILS WILL BE USED FOR CONSTRUCTION OF DIVERSION BERMS AND GRADING OF COMPOST PAD.
3. HAY BALES (OPTIONAL) MAY BE PLACED DOWN SLOPE (OUTSIDE) OF STRAW WADDLES.
4. LOCATION OF STRAW WADDLE OUTLETS IN TEMPORARY DIVERSION BERM MAY BE ADJUSTED AS REQUIRED TO MEET SITE CONDITIONS.

S & EC LEGEND

- LIMITS OF GRADING/DISTURBANCE
- TEMPORARY DIVERSION BERM
- STRAW WADDLE
- CONSTRUCTION ENTRANCE/EXIT

LEGEND

- 110 — EXISTING INDEX CONTOUR
- EXISTING INTERMEDIATE CONTOUR
- EXISITNG BOUNDARY/PROPERTY LINE
- EXISTING RIGHT OF WAY
- EXISTING DITCH
- EXISTING TREELINE
- FLOODPLAIN
- EXISTING BUFFER/EASEMENT
- CENTERLINE
- EXISTING SOIL ROAD
- ZONE X (THE AREA IS OUTSIDE THE 100 YEAR FLOODPLAIN BUT WITHIN THE 500 YEAR FLOODPLAIN (0.2% ANNUAL CHANCE FLOOD))
- ZONE X (THE AREA IS OUTSIDE THE 100 YEAR AND 500 YEAR FLOODPLAIN)
- ZONE AE (THE AREA IS WITHIN THE 100 YEAR FLOODPLAIN (1% ANNUAL CHANCE FLOOD EVENT))
- GRADE ARROW (POINTS TO LOWER ELEVATION)
- FLOODPLAIN MARKER

A. R. Rubin, Ed.D.
President

A. R. Rubin and Associates
sustainable environmental solutions

192 fearrington post
pittsboro, nc, 27312

919 545 3066
919 270 0344

GRAPHIC SCALE: 1" = 40'
0 20 40 80 120

REVISIONS

NO.	DATE	DESCRIPTION
1	08/08/11	PER LQS
2	02/29/12	PER SWS
3	12/03/12	PER SWS
4	08/14/13	PER LQS, SWS
5	11/21/13	PER SWS

PROJECT MANAGER:	PROJECT ENGINEER:
GSM	ZLF
DRAWN BY: MAE	CHECKED BY: GSM

DATE:
JUNE 28, 2011

NORTH CAROLINA PROFESSIONAL SEAL 17069 ENGINEER ZACHARY L. MacCONNELL

MacCONNELL & Associates, P. C.
1903 NORTH HARRISON AVE., SUITE 102
CARY, NORTH CAROLINA 27513
P. O. BOX 129
MORRISVILLE, NORTH CAROLINA 27560
TEL: (919) 467-1239 FAX: (919) 319-6510

CRAVEN AG SERVICES, INC.

COMPOSTING FACILITY

CRAVEN COUNTY, NC

STORMWATER/ SEDIMENTATION & EROSION CONTROL PLAN LAYOUT 1 OF 2

PROJECT NUMBER	DRAWING NUMBER
A45201.00	C-103

COPYRIGHT © 2011

A45201.00 – CRAVEN AG SERVICES, INC. – COMPOSTING FACILITY

NOTES

1. SEE C-101 FOR GENERAL NOTES.
2. ALL DISTURBED SOILS WILL BE USED FOR CONSTRUCTION OF DIVERSION BERMS AND GRADING OF COMPOST PAD.
3. HAY BALES (OPTIONAL) MAY BE PLACED DOWN SLOPE (OUTSIDE) OF STRAW WADDLES.
4. LOCATION OF STRAW WADDLE OUTLETS IN TEMPORARY DIVERSION BERM MAY BE ADJUSTED AS REQUIRED TO MEET SITE CONDITIONS.

COPYRIGHT © 2011

S & EC LEGEND

- LIMITS OF GRADING/DISTURBANCE
- TEMPORARY DIVERSION BERM
- STRAW WADDLE
- CONSTRUCTION ENTRANCE/EXIT

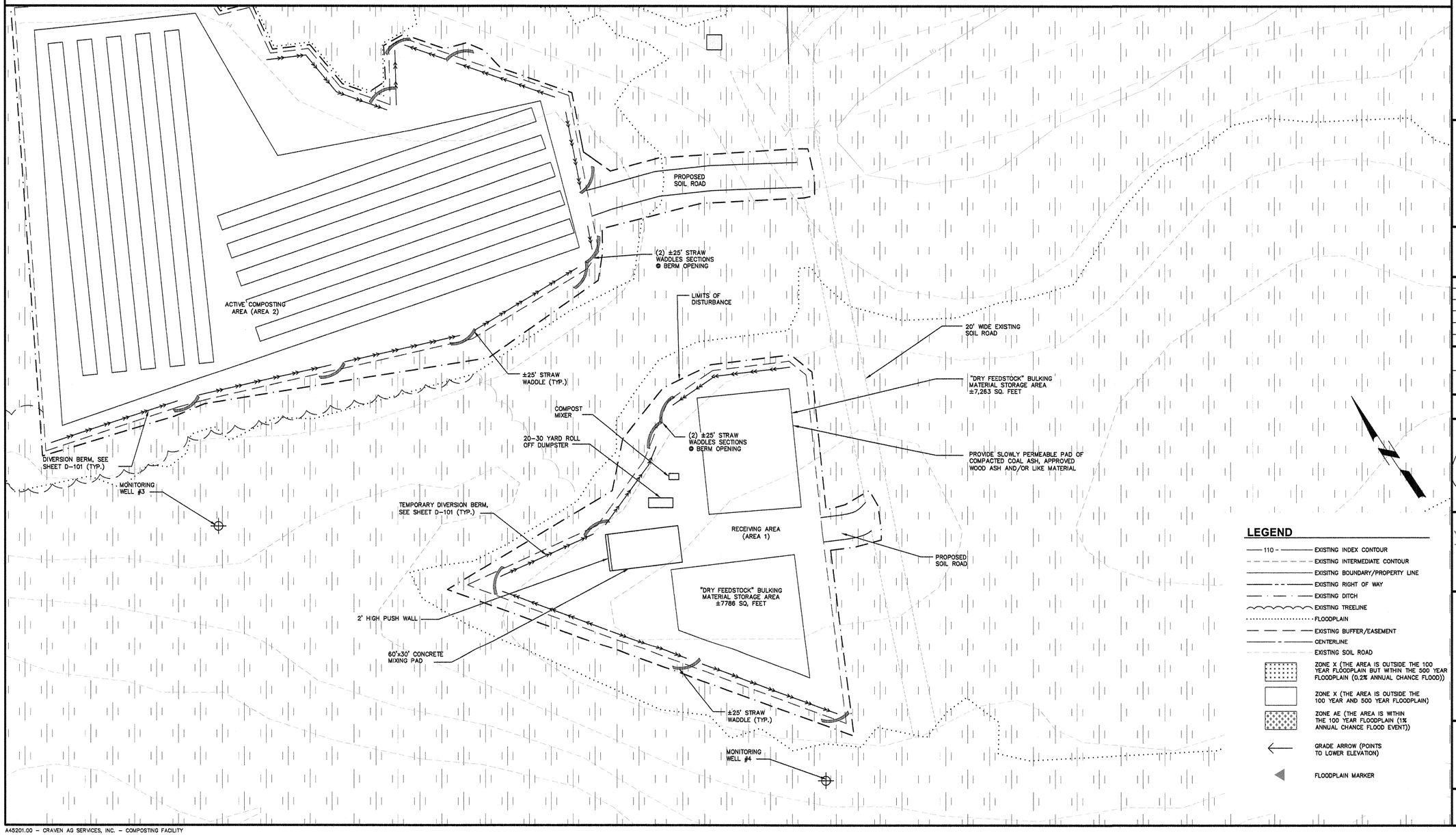

LEGEND

- 110 — EXISTING INDEX CONTOUR
- EXISTING INTERMEDIATE CONTOUR
- EXISTING BOUNDARY/PROPERTY LINE
- EXISTING RIGHT OF WAY
- EXISTING DITCH
- EXISTING TREELINE
- FLOODPLAIN
- EXISTING BUFFER/EASEMENT
- CENTERLINE
- EXISTING SOIL ROAD
- ZONE X (THE AREA IS OUTSIDE THE 100 YEAR FLOODPLAIN BUT WITHIN THE 500 YEAR FLOODPLAIN (0.2% ANNUAL CHANCE FLOOD))
- ZONE X (THE AREA IS OUTSIDE THE 100 YEAR AND 500 YEAR FLOODPLAIN)
- ZONE AE (THE AREA IS WITHIN THE 100 YEAR FLOODPLAIN (1% ANNUAL CHANCE FLOOD EVENT))
- GRADE ARROW (POINTS TO LOWER ELEVATION)
- FLOODPLAIN MARKER

A. R. Rubin, Ed.D.
President

A. R. Rubin and Associates
sustainable environmental solutions

192 fearrington post
pittsboro, nc, 27312

919 545 3066
919 270 0344

GRAPHIC SCALE: 1" = 40'
0 20 40 80 120

REVISIONS

NO.	DATE	DESCRIPTION
1	08/08/11	PER LQS
2	02/29/12	PER SWS
3	12/03/12	PER SWS
4	08/14/13	PER LQS, SWS

PROJECT MANAGER:	PROJECT ENGINEER:
GSM	ZLF
DRAWN BY: MAE	CHECKED BY: GSM

DATE: JUNE 28, 2011

NORTH CAROLINA PROFESSIONAL SEAL 17069 ENGINEER LARRY S. MacCONNELL 8/14/13

MacCONNELL & Associates, P. C.
1903 NORTH HARRISON AVE., SUITE 102
CARY, NORTH CAROLINA 27513
P. O. BOX 129
MORRISVILLE, NORTH CAROLINA 27560
TEL: (919) 467-1239 FAX: (919) 319-6510

CRAVEN AG SERVICES, INC.

COMPOSTING FACILITY

CRAVEN COUNTY, NC

STORMWATER/ SEDIMENTATION & EROSION CONTROL PLAN LAYOUT 2 OF 2

PROJECT NUMBER	DRAWING NUMBER
A45201.00	C-104

A45201.00 – CRAVEN AG SERVICES, INC. – COMPOSTING FACILITY

SEEDING SPECIFICATIONS

1. PERMANENT SEEDING: PERMANENT SEEDING IS REQUIRED FOR ALL AREAS DISTURBED BY CONSTRUCTION EXCEPT FOR AREAS COVERED BY STRUCTURES, PAVEMENTS, ETC.

2. TEMPORARY SEEDING: TEMPORARY SEEDING IS REQUIRED FOR THOSE AREAS DISTURBED BY CONSTRUCTION AND LEFT EXPOSED FOR PERIODS OF 15 DAYS OR MORE BEFORE BEING BROUGHT TO FINAL GRADE AND PERMANENTLY SEEDED. THE FORCE MAIN SHALL BE SEEDED AT THE END OF EACH WORKING DAY TO MINIMIZE CONSTRUCTION DISTURBANCE ACTIVITIES.

*PRODUCTS:

MATERIALS:

1. FERTILIZER: PROVIDE 10-10-10 COMMERCIAL FERTILIZER CONFORMING TO STATUTORY REQUIREMENTS AND ALL RULES AND REGULATIONS ADOPTED BY THE NORTH CAROLINA DEPARTMENT OF AGRICULTURE.

2. LIMESTONE: PROVIDE LIMESTONE CONFORMING TO ALL STATUTORY REQUIREMENTS AND ALL RULES AND REGULATIONS ADOPTED BY THE NORTH CAROLINA DEPARTMENT OF AGRICULTURE.

3. SEEDING: PROVIDE SEED CONFORMING TO ALL STATUTORY REQUIREMENTS AND ALL RULES AND REGULATIONS ADOPTED BY THE NORTH CAROLINA DEPARTMENT OF AGRICULTURE. PROVIDE SEED MIXTURES AS TABULATED BELOW. DELIVER SEED TO THE SITE IN ORIGINAL CONTAINERS BEARING THE APPROPRIATE GUARANTEED MIXTURES. SEED SHALL SHOW A PURITY OF NOT LESS THAN 90 PERCENT AND GERMINATION QUALITY OF NOT LESS THAN 85 PERCENT.

3A. TEMPORARY MIXTURE:

A. FOR DECEMBER 1st THROUGH APRIL 15th, THE MIXTURE SHALL CONSIST OF 120 lbs./ac. RYE (GRAIN) AND 50 lbs./ac. KOBE.

B. FOR APRIL 15th THROUGH AUGUST 15th, THE MIXTURE SHALL CONSIST OF 40 lbs./ac. GERMAN MILLET.

C. FOR AUGUST 15th THROUGH DECEMBER 30th, THE MIXTURE SHALL CONSIST OF 120 lbs./ac. RYE (GRAIN).

3B. PERMANENT MIXTURE:

A. THE PERMANENT SEED MIXTURE FOR GENERAL AREAS SHALL CONSIST OF MINIMUM RATE OF 50 lbs./ac. PENSACOLA BAHIAGRASS, 30 lbs./ac. SERICEA LESPEDEZA, 10 lbs./ac. COMMON BERMUDA GRASS, AND 10 lbs./ac. GERMAN MILLET. THE BEST SEEDING DATES FOR THIS MIXTURE ARE FROM APRIL 1st TO JULY 15th.

B. OTHER MIXTURES: OTHER MIXTURES, AS APPROVED OR RECOMMENDED BY THE SOIL CONSERVATION SERVICE OR THE NORTH CAROLINA AGRICULTURAL EXTENSION OFFICE MAY BE USED.

4. MULCH: MULCH ALL SEEDED AREAS, EXCEPT WHERE JUTE MESH IS REQUIRED AND DURING PERMANENT SEEDING. USE UNDAMAGED, AIR-DRIED, THRESHED SMALL GRAIN STRAW FREE OF UNDESIRABLE WEED SEED. ANCHOR STRAW BY TACKING WITH ASPHALT, NETTING, BY ROVING, OR THROUGH USE OF A MULCH ANCHORING TOOL

*EXECUTION

1. FOLLOW PROCEDURES SET FORTH IN THE PUBLICATION "GUIDE FOR SEDIMENT CONTROL ON CONSTRUCTION SITES IN NORTH CAROLINA" BY THE SOIL CONSERVATION SERVICE OF THE UNITED STATES DEPARTMENT OF AGRICULTURE, AND AS SPECIFIED HEREIN.

2. SPREAD A MINIMUM OF FOUR (4) INCHES OF TOP SOIL OVER ALL DISTURBED AREAS TO THE FINISHED GRADE.

3. REMOVE ALL GRASS AND WEEDS AND SHAPE THE OVERALL AREA TO EVEN OUT HIGH AND LOW SPOTS.

4. SCARIFY SOIL TO A DEPTH OF THREE (3) INCHES AND WORK INTO A SATISFACTORY SEED BED BY DISKING OR THROUGH THE USE OF CULTIPACKERS, HARROWS, DRAGS, OR OTHER APPROVED MEANS.

5. THE PREPARATION OUTLINED ABOVE SHALL NOT BE DONE WHEN THE SOIL IS FROZEN, WET, OR OTHERWISE IN AN UNFAVORABLE CONDITION.

6. BEGIN AND COMPLETE SEEDING OPERATIONS, AS OUTLINED BELOW, AS SOON AS POSSIBLE AFTER FINAL OR INTERMEDIATE GRADING IS COMPLETED.

7. DISTRIBUTE LIME AND FERTILIZER, AS REQUIRED, UNIFORMLY OVER THE SEED BED. HARROW RAKE OR OTHERWISE WORK THESE ADDITIONS INTO THE SEED BED.

8. DISTRIBUTE SEED UNIFORMLY OVER THE ESTABLISHED SEED BED. LIGHTLY RAKE THE SURFACE OF THE SEED BED IN ORDER TO COVER SEED TO A MAXIMUM DEPTH OF 0.25 INCH.

9. COMPACT THE SEED BED WITH AN APPROVED ROLL OR DRAG AFTER COVERING THE SEED.

10. NO LIME, FERTILIZER, OR SEED SHALL BE APPLIED DURING A STRONG WIND, WHEN THE SOIL IS WET, OR WHEN THE SOIL IS OTHERWISE UNWORKABLE. SHOULD RAIN FOLLOW SEEDING BEFORE ROLLING IS INITIATED, THE SEED BED SHALL NOT BE ROLLED.

11. NO RIP-RAP IS TO BE PLACED ALONG THE BANKS OF NEW FILL. MAINTAIN THE AREA AND REPAIR ANY EROSION DAMAGE UNTIL A PERMANENT GROUND COVER IS ESTABLISHED. USE MULCH OR MESH AS REQUIRED.

*APPLICATION

TEMPORARY SEEDING: FOR DECEMBER 1st THROUGH AUGUST 15th:

1. APPLY LIME ACCORDING TO THE SOIL TESTS OR AT A RATE OF 2000 lbs./ac. BEFORE SEEDING.

2. APPLY FERTILIZER ACCORDING TO THE SOIL TESTS OR AT A RATE OF 750 lbs./ac.

3. SEED THE SEED BED WITH THE SPECIFIED SEED MIXTURE AT THE SPECIFIED RATE FOR THE RECOMMENDED PLANTING SEASON.

4. APPLY GRAIN STRAW AT A RATE OF 4000 lbs./ac. OR PROVIDE EQUIVALENT COVER OF ANOTHER SUITABLE COVER. MULCH SHALL BE ANCHORED IN A SUITABLE WAY. WHERE JUTE MESH IS REQUIRED, APPLY THE PRODUCT ACCORDING TO THE MANUFACTURER'S RECOMMENDATIONS AND ANCHOR WITH STEEL HAIRPIN-SHAPED WIRE STAPLES.

5. REFERTILIZE SEED BED IF GROWTH IS NOT FULLY ADEQUATE, AS DETERMINED BY THE ENGINEER. RE-SEED, FERTILIZE, AND MULCH ALL DAMAGED, BARE, AND ERODED AREAS IMMEDIATELY AND UNTIL A SUITABLE COVER IS ESTABLISHED.

TEMPORARY SEEDING: FOR AUGUST 15th THROUGH DECEMBER 30th:

1. APPLY LIME ACCORDING TO THE SOIL TESTS OR AT A RATE OF 2000 lbs./ac. BEFORE SEEDING.

2. APPLY FERTILIZER ACCORDING TO THE SOIL TESTS OR AT A RATE OF 1000 lbs./ac.

3. SEED THE SEED BED WITH THE SPECIFIED SEED MIXTURE AT THE SPECIFIED RATE FOR THE RECOMMENDED PLANTING SEASON.

4. APPLY GRAIN STRAW AT A RATE OF 4000 lbs./ac. OR PROVIDE EQUIVALENT COVER OF ANOTHER SUITABLE COVER. MULCH SHALL BE SUITABLY ANCHORED. WHERE JUTE MESH IS REQUIRED, APPLY THE PRODUCT ACCORDING TO THE MANUFACTURER'S RECOMMENDATIONS AND ANCHOR WITH STEEL HAIRPIN-SHAPED WIRE STAPLES.

5. REFERTILIZE SEED BED IF GROWTH IS NOT FULLY ADEQUATE, AS DETERMINED BY THE ENGINEER. RE-SEED, FERTILIZE, AND MULCH ALL DAMAGED, BARE, AND ERODED AREAS IMMEDIATELY AND UNTIL A SUITABLE COVER IS ESTABLISHED.

PERMANENT SEEDING: APPLICATION OF LIME, FERTILIZER, SEED, AND MULCH:

1. WHERE A NEAT APPEARANCE IS DESIRED, OMIT SERICEA.

2. USE COMMON BERMUDAGRASS ONLY ON ISOLATED SITES WHERE IT CANNOT BECOME A PEST. BERMUDAGRASS MAY BE REPLACED WITH 5 lbs./ac. CENTIPEDEGRASS.

3. SOIL AMENDMENTS: APPLY LIME AND FERTILIZER ACCORDING TO SOIL TESTS, OR APPLY 3000 lbs./ac. GROUND AGRICULTURAL LIMESTONE AND 500 lbs./ac. 10-10-10 FERTILIZER.

4. SEED THE SEED BED WITH THE SPECIFIED SEED MIXTURE AT THE SPECIFIED RATE DURING RECOMMENDED PLANTING SEASONS. IF GRADING IS COMPLETED AT TIMES OTHER THAN THE RECOMMENDED SEASON, PROVIDE TEMPORARY SEEDING OR OTHER EROSION AND SEDIMENTATION PROTECTION APPROVED BY THE ENGINEER UNTIL THE APPROPRIATE PLANTING SEASON BEGINS.

5. MULCH: APPLY 4000 lbs./ac. GRAIN STRAW OR EQUIVALENT COVER OF ANOTHER SUITABLE MULCH. ANCHOR BY TACKING ASPHALT, ROVING, OR NETTING OR BY CRIMPING WITH A MULCH ANCHORING TOOL. A DISC WITH BLADES SET NEARLY STRAIGHT MAY BE USED AS A MULCH ANCHORING TOOL.

6. MAINTENANCE: REFERTILIZE THE FOLLOWING APRIL WITH 50 lbs./ac. NITROGEN. REPEAT AS GROWTH REQUIRES. MOW ONLY ONCE PER YEAR. WHERE A NEAT APPEARANCE IS DESIRED, OMIT SERICEA AND MOW AS OFTEN AS NEEDED.

CONSTRUCTION SCHEDULE

THE CONTRACTOR MUST COMPLY WITH THE REQUIREMENTS HEREIN:

1. INSTALL EROSION CONTROL MEASURES AS REQUIRED, SUCH AS THE CONSTRUCTION ENTRANCE, DIVERSION BERMS, AND STRAW WADDLES.

2. CLEAR AND GRUB ANY WOODED AREAS TO BE DEVELOPED WITHIN LIMITS OF DISTURBANCE. STOCKPILE TOPSOIL AND SUITABLE FILL MATERIAL IN AREAS DESIGNATED AS STOCKPILES.

3. BEGIN GRADING ACTIVITIES AFTER ALL REQUIRED EROSION CONTROL MEASURES HAVE BEEN INSTALLED AND CONSTRUCTED. SALVAGE ANY TOPSOIL THAT MAY BE USED AFTER CONSTRUCTION.

4. SEED TEMPORARY AREAS THAT HAVE BEEN LEFT DORMANT FOR LONGER THAN 15 DAYS.

5. ALL EROSION AND SEDIMENTATION CONTROL MEASURES SHALL BE INSPECTED WEEKLY AND AFTER EACH HEAVY RUNOFF PRODUCING RAINFALL. NEEDED REPAIRS SHALL BE MADE IMMEDIATELY.

6. AFTER CONSTRUCTION REMOVE ALL TEMPORARY STRUCTURES AND ENSURE ALL SEEDING IS COMPLETED FOR AREAS DISTURBED.

MAINTENANCE PLAN

1. ALL EROSION AND SEDIMENTATION CONTROL MEASURES SHALL BE INSPECTED WEEKLY AND AFTER EACH HEAVY STORMWATER-PRODUCING RAINFALL. ALL NEEDED REPAIRS SHALL BE MADE IMMEDIATELY TO PREVENT FURTHER DAMAGE AND EROSION. STRUCTURES THAT WILL BE MAINTAINED WILL INCLUDE:

   CONSTRUCTION ENTRANCE/EXIT: INSPECT CONSTRUCTION ROAD SURFACE REGULARLY, MAINTAIN IN A CONDITION TO PREVENT SEDIMENT FROM LEAVING THE SITE, AND TOP-DRESS WHEN NEEDED. SEDIMENT TRANSPORTED TO PUBLIC ROADS SHALL BE REMOVED DAILY.

   STRAW WADDLE: CLEAN OUT SEDIMENT, STRAW, LIMBS, OR OTHER DEBRIS WHEN NEEDED. ANTICIPATE SUBMERGENCE AND DEPOSITION ABOVE THE STRAW WADDLE AND EROSION FROM HIGH FLOWS AROUND THE EDGES OF THE STRAW WADDLE. CORRECT ALL DAMAGE IMMEDIATELY. IF SIGNIFICANT EROSION OCCURS BETWEEN STRAW WADDLES, ADDITIONAL MEASURES CAN BE TAKEN SUCH AS, INSTALLING ADDITIONAL WADDLES AT BERM OUTLETS.

   SEEDING, FERTILIZING, AND MULCHING: SEEDED AREAS SHALL BE INSPECTED FOR FAILURE AND NECESSARY REPAIRS SHALL BE MADE WITHIN THE SAME SEASON, IF POSSIBLE.

2. THE ANGLE FOR GRADED SLOPES AND FILLS SHALL BE NO GREATER THAN THE ANGLE THAT CAN BE RETAINED BY VEGETATIVE COVER OR OTHER ADEQUATE EROSION CONTROL DEVICES OR STRUCTURES. IN ANY EVENT, SLOPES LEFT EXPOSED WILL, WITHIN 21 CALENDAR DAYS OF COMPLETION OF ANY PHASE OF GRADING, BE PLANTED OR OTHERWISE PROVIDED WITH TEMPORARY GROUND COVER, DEVICES OR STRUCTURES SUFFICIENT TO RESTRAIN EROSION. PERMANENT GROUND COVER SHALL BE PROVIDED FOR ALL DISTURBED AREAS WITHIN 15 WORKING DAYS OR NO MORE THAN 90 CALENDAR DAYS.

TOTAL DISTURBED AREA: 7.95 AC.

WINDROW TYPE	AVERAGE HEIGHT	AVERAGE WIDTH	AVERAGE SPACING
ACTIVE	6'	10'	8'
CURING	15'	20'	6'-8'
FINISHED PRODUCT	30'	50' (MAX)	6'-8'

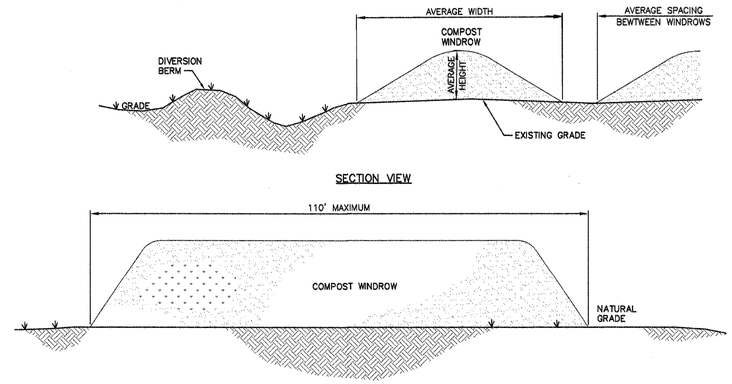

1 / D-101 **COMPOST WINDROW**
NTS

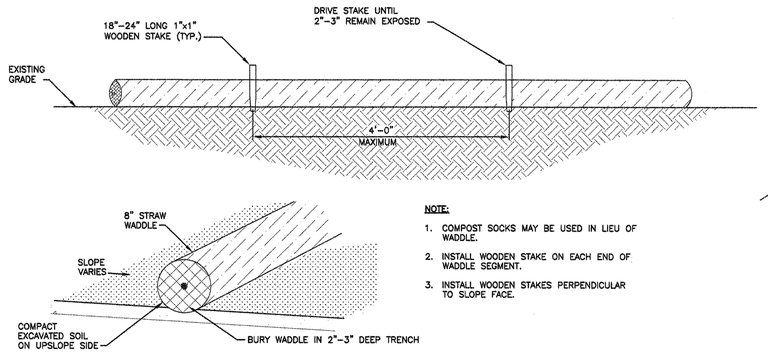

NOTE:

1. COMPOST SOCKS MAY BE USED IN LIEU OF WADDLE.
2. INSTALL WOODEN STAKE ON EACH END OF WADDLE SEGMENT.
3. INSTALL WOODEN STAKES PERPENDICULAR TO SLOPE FACE.

2 / D-101 **STRAW WADDLE DETAIL**
NTS

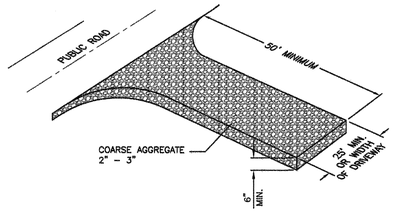

NOTES:

1. GRAVEL PAD TO BE 25'-0" x 50'-0" AND 6" THICK MINIMUM
2. TURNING RADIUS SUFFICIENT TO ACCOMMODATE LARGE TRUCKS IS TO BE PROVIDED.
3. ENTRANCE(S) SHOULD BE LOCATED TO PROVIDE FOR MAXIMUM UTILITY BY ALL CONSTRUCTION VEHICLES.
4. MUST BE MAINTAINED IN A CONDITION WHICH WILL PREVENT TRACKING OR DIRECT FLOW OF MUD ONTO STREETS. PERIODIC TOP DRESSING WITH STONE SHALL BE NECESSARY.
5. ANY MATERIAL DEPOSITED ONTO THE ROAD MUST BE CLEANED UP IMMEDIATELY.
6. APPLICABLE AT ALL POINTS OF INGRESS AND EGRESS UNTIL SITE IS STABILIZED. FREQUENT CHECKS AND TIMELY MAINTENANCE OF THIS DEVICE MUST BE PROVIDED.

3 / D-101 **TEMPORARY CONSTRUCTION ENTRANCE**
NTS

NOTE:

1. HAY BALES (OPTIONAL) MAY BE PLACED DOWN SLOPE (OUTSIDE) OF BERM.

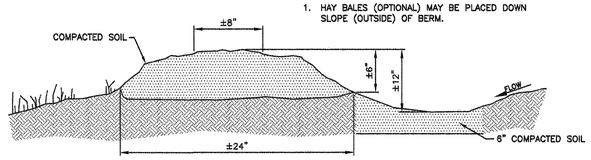

4 / D-101 **DIVERSION BERM**
NTS

NOTES

1. SEE C-101 FOR ALL GENERAL NOTES.

A. R. Rubin, Ed.D.
President

A. R. Rubin and Associates
sustainable environmental solutions

192 fearrington post
pittsboro, nc. 27312

919 545 3066
919 270 0344

REVISIONS

NO.	DATE	DESCRIPTION
1	08/08/11	PER LQS
2	02/29/12	PER SWS
3	12/03/12	PER SWS
4	08/14/13	PER LWQ, SWS
5	11/21/13	PER SWS

PROJECT MANAGER: GSM	PROJECT ENGINEER: ZLF
DRAWN BY: MAE	CHECKED BY: GSM

DATE: JUNE 28, 2011

NORTH CAROLINA PROFESSIONAL SEAL 17069 ENGINEER GARY S. MacCONNELL 11/21/13

MacCONNELL & Associates, P. C.
1903 NORTH HARRISON AVE., SUITE 102
CARY, NORTH CAROLINA 27513
P. O. BOX 129
MORRISVILLE, NORTH CAROLINA 27560
TEL: (919) 467-1239 FAX: (919) 319-6510

CRAVEN AG SERVICE, INC.

COMPOSTING FACILITY

CRAVEN COUNTY, NC

DETAILS

PROJECT NUMBER	DRAWING NUMBER
A45201.00	D-101

COPYRIGHT © 2011

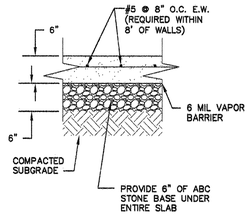

1 / D-102 TYPICAL CONCRETE PAD DETAIL
NTS

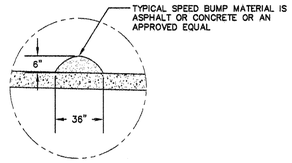

3 / D-102 SPEED BUMP DETAIL
NTS

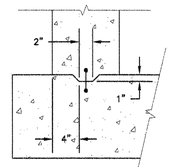

4 / D-102 KEY DETAIL
NTS

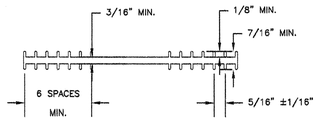

2 / D-102 6" FLATSTRIP WATERSTOP
NTS

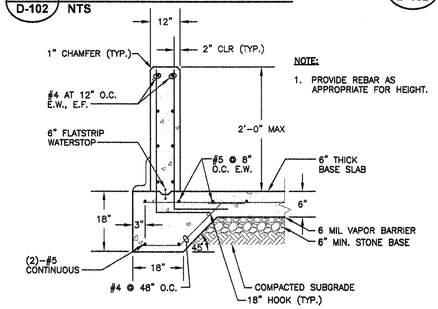

NOTE:
1. PROVIDE REBAR AS APPROPRIATE FOR HEIGHT.

5 / D-102 WALL POURED SECTION
NTS

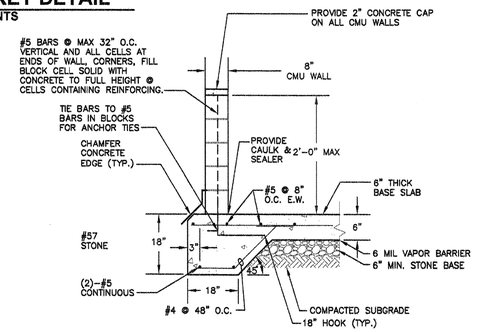

6 / D-102 TYPICAL SLAB AND CMU WALL DETAIL
NTS

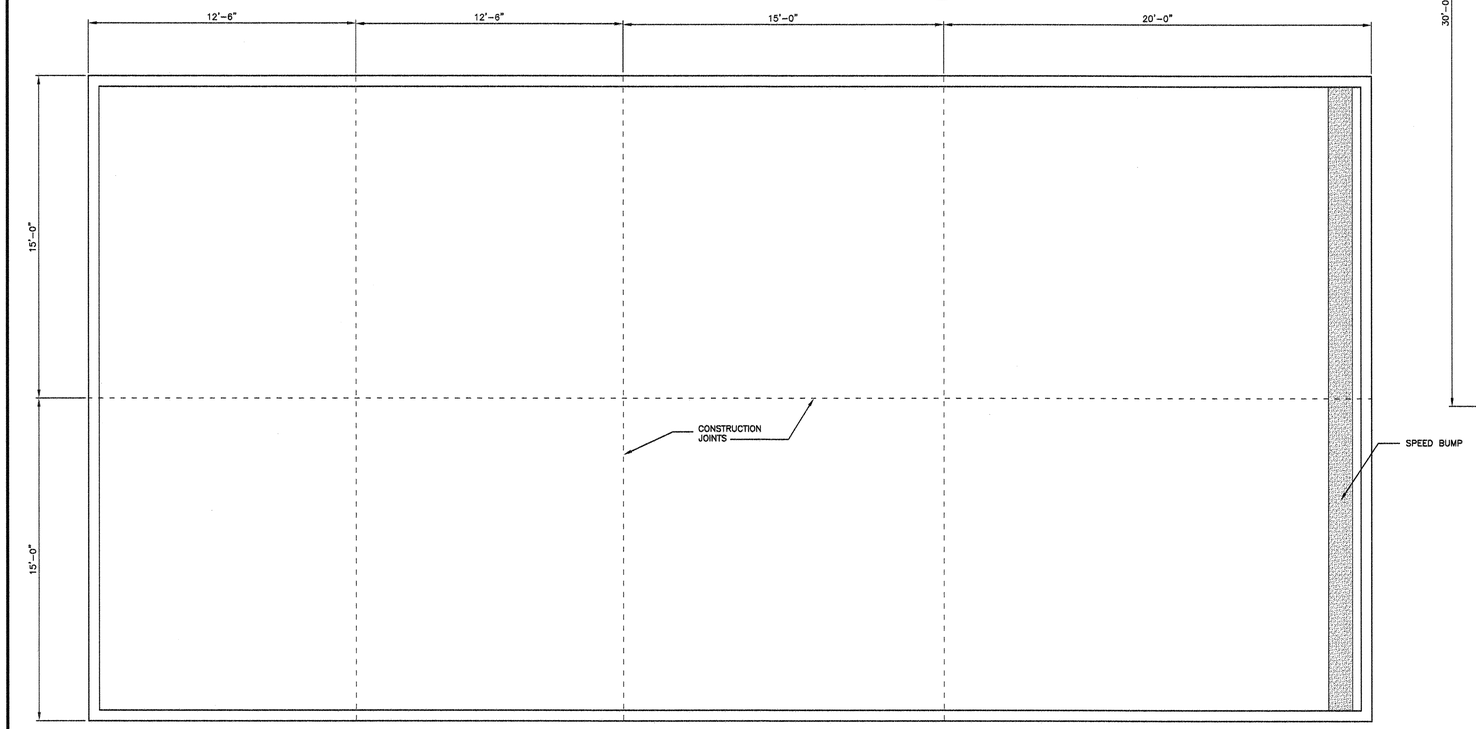

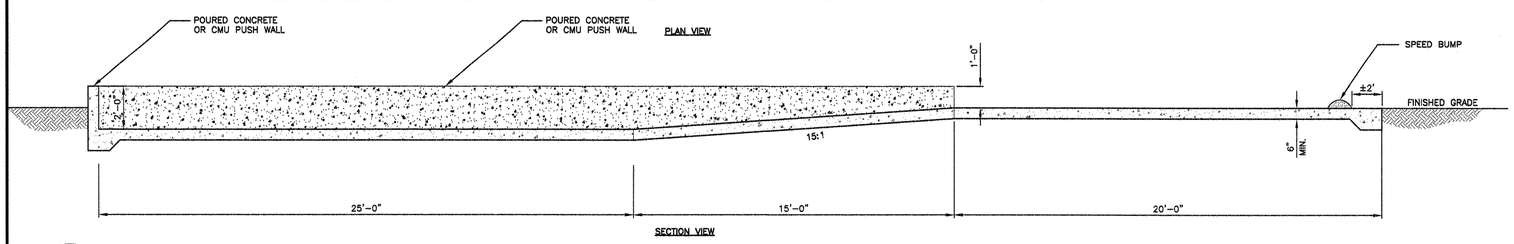

7 / D-102 MIXING PAD DETAIL
NTS

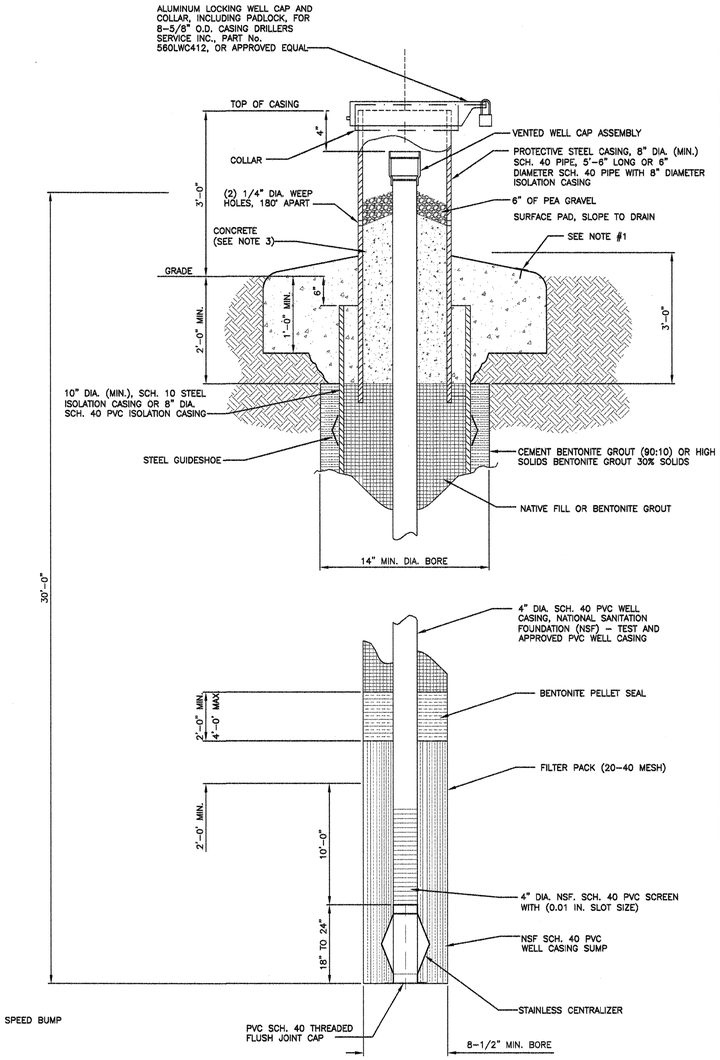

NOTES:

1. SUB-CONTRACTOR SHALL STAMP WELL NUMBER (MIN. OF 1/2" SIZE LETTERS) IN BRASS PLATE. BRASS PLATE SHALL BE DOMED SURVEY MARKER 3" DIA. LIETZNUMBER 8134-18 OR APPROVED EQUAL.
2. PROTECTIVE CASING SHALL BE CLEANED ACCORDING TO SSPC-SP6 AND PRIMED WITH TNEMEC SERIES 37-77W @ 3-5 MILS AND FINISHED WITH TNEMEC SERIES 82-BW56 @ 2-3 MILS, OR CONTRACTOR ACCEPTED EQUAL.
3. CONCRETE FOR PAD FOR PROTECTIVE WELL CASINGS SHALL BE MIN. 2500 PSI @ 28 DAYS.
4. ISOLATION CASING TO BE INSTALLED IN CONFINING LAYER ABOVE GROUNDWATER.
5. FIELD INSTALL SPACERS ON PADLOCK SHACKLE AS REQUIRED TO MINIMIZE CAP OPENING ACCESS. PADLOCKS AND SPACERS SHALL BE SUPPLIED BY THE CONTRACTOR.
6. EACH PROTECTIVE CASING SHALL BE LABELED WITH BLACK LETTERS. LABEL SHALL INCLUDE THE PREFIX MW FOR MONITORING WELLS, THE PREFIX PZ FOR PIEZOMETERS AND THE NUMBER ASSIGNED BY THE CONTRACTOR. LETTERS SHALL BE A MINIMUM OF 3 INCHES HIGH.

8 / D-102 GROUNDWATER MONITORING WELL
NTS

NOTES

1. SEE C-101 FOR ALL GENERAL NOTES.

COPYRIGHT © 2011

A. R. Rubin, Ed.D.
President

A. R. Rubin and Associates
sustainable environmental solutions

192 fearrington post
pittsboro, nc, 27312
919 545 3066
919 270 0344

REVISIONS

NO.	DATE	DESCRIPTION
2	02/29/12	PER SWS
3	12/03/12	PER SWS

PROJECT MANAGER: GSM	PROJECT ENGINEER: ZLF
DRAWN BY: MAE	CHECKED BY: GSM

DATE: JUNE 28, 2011

NORTH CAROLINA PROFESSIONAL SEAL 17069 ENGINEER GARY S. MacCONNELL 8/14/13

MacCONNELL & Associates, P. C.
1903 NORTH HARRISON AVE., SUITE 102
CARY, NORTH CAROLINA 27513
P. O. BOX 129
MORRISVILLE, NORTH CAROLINA 27560
TEL: (919) 467-1239 FAX: (919) 319-6510

CRAVEN AG SERVICE, INC.

COMPOSTING FACILITY

CRAVEN COUNTY, NC

MIXING PAD DETAILS

PROJECT NUMBER	DRAWING NUMBER
A45201.00	D-102

A45201.00 – CRAVEN AG SERVICES, INC. – COMPOSTING FACILITY