SMITH + GARDNER
ENGINEERS

ADDRESS 14 N. Boylan Avenue, Raleigh NC 27603 | TEL 919.828.0577 | WEB www.smithgardnerinc.com

Permit No.	Date	Document ID No.
96-06	**August 20, 2012**	**17085**

Received via an e- mail
Date: **August 20, 2012**
Solid Waste Section
Raleigh Central Office

August 20, 2012

Mr. Ming-Tai Chao, P.E., Engineer
North Carolina DENR, Division of Waste Management
217 West Jones Street
Raleigh, North Carolina 27603

RE: **Landfill Gas Collection & Control System Design Plan**
MP Wayne, LLC – Wayne County MSW Landfill - Permit No. 96-01 and 96-06
Dudley, Wayne County, North Carolina

Dear Mr. Chao:

Smith Gardner, Inc. (S+G), formerly Richardson Smith Gardner & Associates, would like to submit this Landfill Gas Collection & Control System (GCCS) Design Plan (Plan) for your information on behalf of Wayne County and Methane Power (DBA MP and Wayne LLC). This Plan covers three (3) units located at the Wayne County Municipal Solid Waste (MSW) Landfill.

This Plan modifies a previous GCCS design plan prepared by Municipal Engineering Services, dated September 2001, originally designed for Units 1 and 2 and a more recent "GCCS Expansion and LFGTE Drawing Plans" dated September 16, 2010 prepared by Carlson Environmental Consultants.

As you are aware, this project is a collaboration between the County and Methane Power. As such, the generating facility is already under a separate air permit from the wellfield and collection system under a permit to the County.

Should you have any questions or require clarification, please contact us at (919) 828-0577 or by email below.

Sincerely,
SMITH GARDNER, INC.

Don M. Misenheimer
Project Scientist, ext. 224
don@smithgardnerinc.com

Stacey A. Smith, P.E.
Principal, President, ext. 127
stacey@smithgardnerinc.com

NORTH CAROLINA PROFESSIONAL SEAL 023002 ENGINEER STACEY A. SMITH
8-20-12

CC: Tim Rogers, Wayne County
Simon Haworth, Methane Power
Rebecca Pedreira, Methane Power
Bob Gettys, Methane Power
Ryan Hennessy, Methane Power
Henry King, Methane Power
David Bird, Methane Power
Matt Lamb, Smith Gardner
File

H:\Projects\Methane Power\CHANDLER 11-1 (Wayne Co. CQA)\Record Report\Letter Report Wayne Co LFGGCCS_072712.docx

Landfill Gas Collection & Control System Design Plan

Wayne County MSW Landfill

Dudley, North Carolina

NORTH CAROLINA SOLID WASTE FACILITY PERMIT SWP-96-06

Prepared for:

CH4POWER smart energy

121 Edinburgh South Drive, Suite 207
Cary, NC 27511

July 2012

Prepared by:

RICHARDSON SMITH GARDNER & ASSOCIATES
ENGINEERING & GEOLOGICAL SERVICES

PRINTED ON 100% RECYCLED PAPER

Landfill Gas Collection & Control System Design Plan

Wayne County MSW Landfill
Dudley, North Carolina

Prepared for:

CH4POWER
smart energy

121 Edinburgh South Drive, Suite 207
Cary, NC 27511

RSG Project No: MPW-10-3

NORTH CAROLINA PROFESSIONAL SEAL 023002 ENGINEER STACEY A. SMITH

Stacey A. Smith, P.E.
President, Senior Engineer

Lori Ann Phillips, P.E.
Project Engineer

July 2012

RICHARDSON SMITH GARDNER & ASSOCIATES
ENGINEERING & GEOLOGICAL SERVICES
14 N. BOYLAN AVENUE
RALEIGH, NORTH CAROLINA 27603
NC. LIC. NO. C0828 (ENGINEERING)

PRINTED ON 100% RECYCLED PAPER

WAYNE COUNTY MSW LANDFILL FACILITY
NORTH CAROLINA SOLID WASTE FACILITY PERMIT SWP- 96-06

LANDFILL GAS COLLECTION & CONTROL SYSTEM DESIGN PLAN

Table of Contents

1.0 NARRATIVE 1
1.1 Project Description 1
1.2 Contact Information 1
1.2.1 Landfill 1
1.2.2 Developer 1
1.2.3 Engineer 1
1.2.4 Air Quality Regulatory Agency 2
1.2.5 Solid Waste Regulatory Agency 2
1.3 Existing Site Conditions 2
1.4 Regulatory Status 3
2.0 DESIGN GUIDELINES & PROCEDURES 4
2.1 General Information and Background 4
2.2 Operations and Maintenance 4
2.3 Variances from Design and Operational Guidelines 5
3.1 Waste Acceptance Rates 6
3.2 CH_4 Generation Rate Constant (k) 6
3.3 Potential CH_4 Generation Capacity (Lo) 6
3.4 Landfill Gas Generation Rate 7
4.0 LANDFILL GAS COLLECTION SYSTEM 8
4.1 System Design Approach 8
4.2 System Components 8
4.2.1 Extraction Wells 9
4.2.2 Horizontal/Radial Collectors 9
4.2.3 Wellheads 9
4.2.4 Transmission Piping 9
4.2.5 Condensate Management 10
4.2.6 Back-up Flare System 10
4.2.7 Treatment and Conditioning System 10
4.2.8 Gensets 11
4.2.9 Final Cover 11
4.2.10 Leachate Cleanout Pipes 11
5.0 MONITORING & MAINTENANCE 12
5.1 Wellhead Monitoring 12
5.2 Genset System Monitoring 12
5.3 Back-up Flare System Monitoring 12
5.4 Subsurface Migration Monitoring 12
5.5 GCCS Maintenance 13
6.0 REFERENCES 14

WAYNE COUNTY MSW LANDFILL FACILITY
NORTH CAROLINA SOLID WASTE FACILITY PERMIT SWP- 96-06

LANDFILL GAS COLLECTION & CONTROL SYSTEM DESIGN PLAN

Table of Contents

FIGURE 1 ……..7

TABLES

Table 1 Federal Air Regulations Compliance Matrix
Table 2 North Carolina Air and Solid Waste Regulations Compliance Matrix

APPENDICES

Appendix A Calculations
Appendix B Technical Specifications
Appendix C Landfill Gas Collection & Control System Drawings

WAYNE COUNTY MUNICIPAL SOLID WASTE LANDFILL
NORTH CAROLINA SOLID WASTE FACILITY PERMIT SWP- 96-06

LANDFILL GAS COLLECTION & CONTROL SYSTEM DESIGN PLAN

1.0 NARRATIVE

1.1 Project Description

This Landfill Gas Collection & Control System (GCCS) Design Plan (Plan) has been prepared by Richardson Smith Gardner & Associates, Inc. (RSG) to present the design of a system to collect and control landfill gas (LFG) generated from decomposition of municipal solid waste (MSW) at the Wayne County Municipal Solid Waste Landfill (North Carolina Solid Waste Facility Permit SWP- 96-06). An active GCCS is proposed and designed with the primary objective of capturing LFG for delivery to LFG-fired engine-generator sets (gensets) and a back-up flare. The development of this energy project is by a third party developer, MP Wayne, LLC. This Plan is designed to meet standards to collect and control landfill gas regulated under the Federal Clean Air Act contained in 40 CFR Subpart WWW and includes a network of extraction wells, transmission lines, and condensate management features.

1.2 Contact Information

1.2.1 Landfill

Wayne County Municipal Solid Waste Landfill
460 B Landfill Road
Dudley, NC 28333
Phone: (919) 689-2994

Contact: Mr. Tim Rodgers, Solid Waste Manager

1.2.2 Developer

MP Wayne, LLC
121 Edinburgh South Drive
Cary, NC 27511

Contacts: Mr. Ryan Hennessy, President
Phone: (919) 297-7206

1.2.3 Engineer

Richardson Smith Gardner & Associates, Inc.
14 N. Boylan Avenue
Raleigh, North Carolina 27603
Phone: (919) 828-0577

Contacts: Mr. Matthew S. Lamb, Project Scientist
Ms. Lori Ann Phillips, P.E., Project Engineer

1.2.4 Air Quality Regulatory Agency

North Carolina Department of Environment and Natural Resources
Division of Air Quality
1641 Mail Service Center
Raleigh, NC 27699
Phone: (919) 715-6248

Contact: Mr. Booker Pullen, Permit Engineer

1.2.5 Solid Waste Regulatory Agency

North Carolina Department of Environment and Natural Resources
Division of Waste Management
217 West Jones Street
Raleigh, NC 27603
Phone: (919) 727-8200

Contact: Mr. Ming-Tai Chao, P.E., Engineer

1.3 Existing Site Conditions

The Wayne County Municipal Solid Waste (MSW) Landfill is located in Dudley, Wayne County, North Carolina. The landfill has a total of three (3) units, as permitted by Solid Waste Permit Nos. 96-06, 96-01, and Air Permit 08885T03. Units 1 and 2 are closed units with final clay cap in place. Unit 1 receives construction and demolition (C&D) debris on top of the closure area. Unit 3 consists of existing Phases 1 and 2 and future Phase 3, and receives MSW at a rate of approximately 90,000 tons per year.

Units 1 and 2 have an existing LFG collection system designed by others, which is modified under this plan. The original Gas Collection and Control System Plan for Units 1 and 2 was prepared by Municipal Engineering Services, September 2001.

In the permitted landfill area, the existing ground (waste) surface elevations vary from approximately elevation 138 feet to approximately 192 feet. The in-place waste thicknesses vary up to approximately 40 feet across the landfill area.

For the near-term installation, the GCCS will be installed over Units 1 through 3 (approximately 120.3 acres), with expansion over any additional areas as they are constructed and filled. Waste placement began in 1974 (Unit 1), and is expected to continue to approximately 2032 (Unit 3). Phases 1 and 2 of Unit 3 currently have a minimum of 1-foot of intermediate cover soil in place. An existing conditions drawing (Drawing No. S1) is included in **Appendix C**.

1.4 Regulatory Status

The Wayne County Municipal Solid Waste Landfill is regulated by the Subpart WWW-Standards of Performance for Municipal Solid Waste Landfill (Landfill NSPS) (Reference 1), due to maximum design capacity more than 2.5 million megagrams (Mg). Air emissions from the landfill are regulated under Title V Operating Permit 08885T03 issued by the North Carolina Division of Air Quality. The GCCS is designed in accordance with this permit and according to specifications from active collection systems included in the NSPS, as listed in **Table 1**.

The MP Wayne, LLC Facility is currently permitted separately from the landfill under Title V Operating Permit No. 10054R01. The gensets and backup flare are permitted as emission sources under this permit. In accordance with Subpart WWW, due to the presence of a LFG treatment system which filters, compresses, and dewaters the LFG, these emission sources are not considered control devices for the landfill emission sources permitted under Title V Operating Permit 08885T03 and therefore are not subject to source testing.

The gensets are regulated under Subpart ZZZZ – National Emission Standards for Hazardous Air Pollutants (NESHAP) for Reciprocating Internal Combustion Engines (**Reference 2**). Since MP Wayne, LLC is not a major source for hazardous air pollutants (HAPs), Subpart ZZZZ requires compliance with Subpart JJJJ – Standards of Performance for Stationary Spark Ignition Internal Combustion Engines (**Reference 3**) (SI NSPS). Subpart JJJJ requires initial and annual source testing of emissions from these gensets, as directed by the North Carolina Department of Environment and Natural Resources (NC DENR) Division of Air Quality (DAQ).

All regulatory requirements included in the Landfill NSPSa re listed in **Table 1**.

2.0 DESIGN GUIDELINES & PROCEDURES

The GCCS design was prepared based on guidelines and procedures as set forth in the references listed in **Section 6.0**.

The GCCS is designed to collect landfill gas (LFG or gas) at a sufficient rate to minimize LFG fugitive emissions to the atmosphere. The design capacity of the GCCS is based on the LFG generation rates calculated using the LandGEM model plus a reasonable amount of surplus capacity. At a minimum, the GCCS is designed to collect LFG generated from the entire permitted MSW landfill area (Units 1 through 3).

Regulatory compliance matrices are provided in **Tables 1 & 2** to outline Federal air regulatory requirements and North Carolina air and solid waste regulatory requirements, respectively.

2.1 General Information and Background

As a general note, developing a landfill gas collection and control system over either active or closed landfills includes several factors that must be acknowledged and managed. One factor is landfill settlement, either general or differential; which may result in condensate accumulation points in the header line, fractured well casings, or well boot tears/ruptures. Other factors to be cognizant of include filling sequences, traffic patterns, or cell construction considerations. Therefore, this design plan includes reasonable estimates for pipe design and installation for a desired range ("design basis") of landfill gas flow. The Design Engineer (in consultation with the Owner) has utilized the best available practices, experience and judgment to develop this plan. However, the system will likely require maintenance and retrofits (modifications, expansions, etc.) over time to accommodate changing landfill gas generation, either increasing or decreasing (based on factors presented in this document).

2.2 Operations and Maintenance

Landfill gas collection and control systems require skilled, knowledgeable operators to function safely and effectively, regardless of design. Although this plan does not include an operations and maintenance (O&M) plan, a site-specific plan has been developed by the Owner. It is recommended that the operator(s) be trained in the operations and management of landfill gas systems and consult such references as Landfill Gas Operation & Maintenance Manual of Practice prepared by the Solid Waste Association of North America (SWANA). Additionally, operations may be outsourced to service firms experienced in the operations of landfill gas systems, at the Owner's direction.

Any plan addressing landfill gases should prominently recognize the hazards associated with management of explosive gases. All operational staff should be specifically trained in the management and response to situations such as fire or explosion, confined space, drilling and overhead hazards, or any other mechanical hazards addressed by the equipment manufacturer's literature.

The O&M plan should also address the main sections of the GCCS, including extraction wells, header lines, blower/flare skid, and any treatment systems in place. A trained operator should inspect and "tune" the system, as needed, on a routine basis. Additionally, the interaction of the sections addressed above with the day-to-day operation of the landfill should be discussed in the

O&M plan. At landfills which continue to operate in areas after the collection system is installed (such as the Wayne County MSW Landfill), special attention and care should be given to all exposed components within the active areas, and near hauling/access roads. Additionally, collected data should be analyzed to identify potential damage to components below grade that may not be visible.

2.3 Variances from Design and Operational Guidelines

The design and operations of the GCCS are generally in accordance with the design and operational guidelines presented in **Sections 4 and 5**, including the ability to monitor oxygen, nitrogen, pressure, and temperature at each well head, and to maintain these parameters within the following:

1. Oxygen less than 5% and nitrogen less than 20%;
2. Pressure less than 0.0 inches water column; and
3. Temperature less than 55°C (131°F).

However, it is recognized that several conditions present at this site may create challenges to maintaining these parameters. These conditions include the fact that this system is operated to maximize collection of LFG to provide a renewable fuel source for a landfill gas to energy facility. Additionally, several collectors are installed in the interior areas of the landfill that are not at final grade and may be covered with waste at some point in the future.

For these reasons, this Plan maintains the flexibility to request variances, as needed, in order to exceed oxygen, nitrogen, pressure, and/or temperature parameters, if it can be demonstrated through monitoring data that doing so will not inhibit the methanogenic processes within the landfill or create conditions that could cause a subsurface fire. Any such requests will be made in writing to the Division of Air Quality of the North Carolina Department of Environment and Natural Resources (NCDENR), and will be accompanied by supporting data and previous determinations as available from the U.S. EPA Clean Air Act Applicability Determination Index (ADI), available on-line at http://cfpub.epa.gov/adi/. All approved variances will be incorporated into the Design Plan.

3.0 LANDFILL GAS GENERATION

Landfill gas production is determined from methane (CH_4) generation rates. CH_4 generation is affected by factors including:

- Waste acceptance rates;
- CH_4 generation rate constant (k); and
- Potential CH_4 generation capacity (L_o).

These factors, as discussed below, were utilized in the EPA's Landfill Gas Emissions Model (LandGEM) to develop a LFG generation estimate for use in this plan.

3.1 Waste Acceptance Rates

Waste acceptance rates were provided by the landfill from historic scale records for the Wayne County MSW Landfill, which began accepting waste in 1974. As shown in **Appendix A**, historic acceptance records indicate that approximately **3,015,932 tons** of MSW are in place in the landfill (as of June 30, 2010). For planning purposes, future acceptance rates are conservatively estimated to remain constant at **90,000 tons per year** until closure, which is estimated to occur in **2032**.

3.2 CH_4 Generation Rate Constant (k)

The CH_4 generation rate constant (k) determines the rate of landfill gas generation and is a function of moisture content in the waste, nutrients available to methanogenic bacteria, pH, and temperature. The default k values typically used in generation modeling are 0.05 yr^{-1}, and 0.04 yr^{-1}, and are provided in the New Source Performance Standards (NSPS) (Reference 1), and the EPA's AP-42 (Reference 4), respectively. EPA's mandatory Greenhouse Gas (GHG) Reporting Rule (Reference 5) also uses a k value of 0.057 for landfills that recirculate leachate, or receive 40 inches or more of precipitation annually.

User specified values can also be modeled if more specific information, such as waste characteristics or moisture content, is known. Based on consultations with previous engineers involved in estimating LFG flow from this landfill, and considering the relatively high moisture content of the waste due to the landfill design, the site-specific value of **0.055 yr^{-1}** is used. Factors such as increased moisture content of the waste may increase the rate of decay and, thus, accelerate the rate of LFG generation.

3.3 Potential CH_4 Generation Capacity (Lo)

The potential CH_4 generation capacity (L_o) represents the volume of LFG that will be generated per mass unit of waste. This value depends mainly on the amount and ratios of cellulose, hemi-cellulose, and lignin of the waste, which is determined by the types of waste accepted. Two typical values include:

- 170 m^3/Mg (NSPS), and
- 100 m^3/Mg (AP-42).

An intermediate value of **147 m^3/Mg** is used based on available waste type data and consultations with previous engineers involved in estimating LFG flow from this landfill. This higher value is assumed to be more conservative for the purposes of this study.

3.4 Landfill Gas Generation Rate

Based on these parameters, modeling was performed (see **Appendix A**) to determine facility-wide CH_4 generation rates. Total LFG generation amounts are based on the concentration of CH_4 in the LFG. RSG assumed a CH_4 concentration of **50%**, which is supported by field sampling results. LFG generation rates, as well as collection rates based on collection efficiencies determined in the following section are presented in the chart below.

It is noted that modeled generation rates are estimated based on data collected from several landfills across the country, and as such, present an average generation rate per landfill. Generation at individual landfills may be higher or lower than modeled rates.

Figure 1: Wayne County Landfill Gas Generation and Collection Estimate

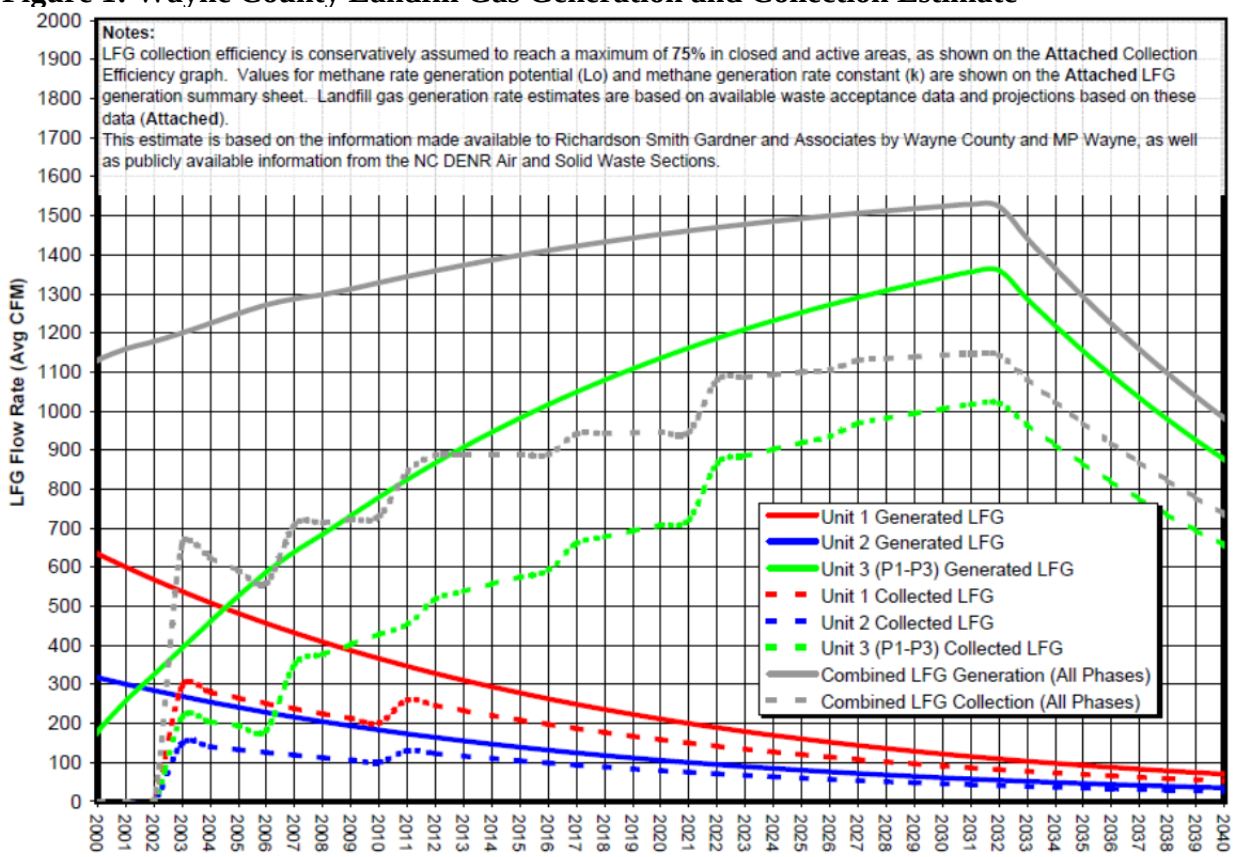

4.0 LANDFILL GAS COLLECTION SYSTEM

4.1 System Design Approach

The landfill gas collection system design includes approximately 64 extraction wells in Units 1, 2, and 3 of the landfill, and 17 radial collectors, as shown in **Drawing D4** in **Appendix C**. The blower is sized to accommodate a maximum gas generation rate of **1,600 SCFM**, which is approximately 5% greater than anticipated maximum generation rate of **1,529 SCFM** (as calculated with LandGEM) for the final development of the landfill. The flare is sized to match the blower capacity. Condensate force mains convey pumped condensate from sumps located in low points of the system to two different locations; Some condensate goes to the condensate knockout pot at the blower skid, where it is then piped under South Landfill Road to the municipal sewer system, and the rest is pumped to the leachate lagoon.

4.2 System Components

The LFG is collected through a series of vertical extraction wells and radial/horizontal collectors and is conveyed through transmission piping for delivery to three (3) 1,059 kW LFG-fired gensets to generate renewable energy. Depending on available LFG, two (2) additional gensets may be installed in the future. The system also includes one (1) LFG-fired open type backup flare with a maximum rated flow rate of 1,600 SCFM. Components of the system include:

- extraction wells and radial collectors;
- wellheads;
- transmission piping;
- condensate management system;
- back-up flare system;
- gensets;
- final cover; and
- leachate cleanout pipes.

Technical specifications for GCCS components are provided in **Appendix B**. Construction quality assurance (CQA) requirements for installation of the GCCS will follow the currently approved CQA Plan for the landfill. The following drawings are provided in **Appendix C** that show the planned location and details of system components:

- S1 – Existing Conditions
- S2 – Site Development Plan
- S3 – Unit 1 Proposed System Expansion
- S4 – Unit 2 Proposed System Expansion
- S5 – Unit 3 Proposed System Expansion
- S6 – Flare and Generator Area
- D1 – Landfill GCCS Details (Sheet 1 of 4)
- D2 – Landfill GCCS Details (Sheet 2 of 4)
- D3 – Landfill GCCS Details (Sheet 3 of 4)
- D4 – Landfill GCCS Details (Sheet 4 of 4)

4.2.1 Extraction Wells

Extraction wells are typically installed at a spacing of approximately one (1) well per acre, such that assumed 100-foot radii of influence (ROI) (as typical of landfills with waste depths equal to or greater than 50 feet) are tangential to each other. However, the shallow depth of waste at this facility significantly reduces this ROI, making this spacing difficult to maintain. Although vertical extraction wells are not viewed as the most effective means of LFG collection at this point, as waste thickness increases in Unit 3, additional wells may be installed. Extraction well borings in the lined Unit 3 will be terminated at an elevation at least 10 feet above the as-built survey elevation of the operational/protective cover layer of the landfill. In unlined areas (i.e., Units 1 and 2), extraction well borings may be extended to the approximate base grade. Each extraction well will consist of 6 or 8-inch diameter SCH 80 PVC pipe placed in a 36-inch diameter boring. The top 10 to 15 feet of pipe below the top of the intermediate cover will be solid to minimize the possibility of air intrusion. The remaining length within the waste will be perforated to maximize capture efficiency. The specified stone of other suitable porous material, as appropriate, will be used as backfill in the perforated zone of the well. Well casings will extend approximately three (3) feet above final cover for visibility and monitoring access.

4.2.2 Horizontal/Radial Collectors

The horizontal/radial collectors typically consist of five substantially horizontal "spokes" around a central hub. More than one layer of up to five "spokes" may be installed around a single hub, where the landfill has sufficient depth. The details of the horizontal/radial collectors are shown on **Drawing D4** in **Appendix C**.

4.2.3 Wellheads

Prefabricated wellheads will be placed on top of each extraction well and horizontal spoke to provide the system operator with a means of monitoring gas for the following:

- gas quality (i.e., $\%O_2$, $\%CH_4$, etc.);
- static pressure (vacuum pressure at the well);
- differential pressure;
- flow; and
- temperature.

A flexible hose will be used to connect each wellhead to the gas transmission lines. Each wellhead will also be equipped with a valve assembly to adjust flow from the extraction well to the transmission piping.

4.2.4 Transmission Piping

The gas transmission piping will consist of smooth-walled HDPE piping with a maximum dimension ratio (DR), (i.e., outside diameter / wall thickness) of 17. The transmission piping is designed based on low velocity (<3,000 FPM) constraints. All piping will be fusion welded with the exception of valves and connections to the wellheads which may be fusion welded or mechanically connected. All piping within the

limits of waste disposal areas will be installed at a minimum slope of 3% to account for anticipated settlement of the waste.

4.2.5 Condensate Management

Condensate pumping stations will be placed at the low points in the transmission piping to remove condensate from the system. The collected condensate will be pumped through a force main into the Unit 3 leachate collection system. An additional condensate pump station will be installed adjacent to the condensate knockout pot at the blower skid. A condensate force main will extend from there under South Landfill Road to the municipal sewer system.

4.2.6 Back-up Flare System

The back-up flare system includes a flare stack rated for 1,600 SCFM and a control panel. The flare includes temperature sensing thermocouples that automatically shut down gas flow from the system in the event that temperature falls below the design temperature established during initial performance testing. Flare operational and monitoring components include:

- Condensate knockout;
- Hand-Off-Automatic controls via Programmable Logic Control (PLC);
- Pressure valves;
- Vacuum gauges;
- Flare pilot fuel system for automatic start and re-start;
- Air compressor for fail-safe shutoff valve;
- Flow meter;
- Flow and temperature recorder; and
- Flame arrester.

The flare system is located in the generator area. Access to the flare will be controlled by a locking gate and fence.

In the event that the gensets cannot utilize the gases from the landfill, the conditioning system will enter a stand-by mode where landfill gases are recirculated. For long-term shutdowns, the gases will be discharged through the back-up flare system. The flare system is designed to comply with the requirements contained in 40 CFR 60.18 to reduce non-methane organic compounds (NMOCs) by at least 98 weight-percent when operated within the design flow rate.

4.2.7 Treatment and Conditioning System

The treatment and conditioning system prepares the gas for combustion by filtration, compression, refrigeration and dehydration. The treatment and conditioning equipment is located adjacent to the gensets within the flare and generator area south of Unit 2.

4.2.8 Gensets

MP Wayne plans to install up to five (5) reciprocating internal combustion engines (RICE) to produce electricity from the collected landfill gases. Initially, three (3) low NOx Jenbacher gensets, manufactured by GE Energy, having an electrical output of 1,059 kW each have been installed.

4.2.9 Final Cover

Inactive areas of the landfill are covered with a minimum of 12 inches of intermediate cover soil, with final cover to be placed incrementally as areas reach the final design grades. The final cover system, which includes a geomembrane as the barrier component, will be as described in the currently approved Closure and Post-Closure Plan for the landfill.

The inclusion of the geomembrane as a barrier layer improves the collection efficiency of the system and reduces surface emissions. Therefore, it is considered an indirect element of the collection system and an enhancement.

4.2.10 Leachate Cleanout Pipes

Leachate cleanout pipes may be utilized to receive condensate from the collection system header pipes as it drains via gravity to traps located at low points in the system. Condensate will continue to drain via gravity to leachate cleanout pipes, where it will enter the leachate collection system. Leachate cleanout pipes may also be retrofitted with wellheads and isolation valves to enable collection of landfill gas that has entered the leachate collection system.

5.0 MONITORING & MAINTENANCE

The GCCS requires routine monitoring and maintenance to keep up system efficiency, minimize surface emissions from the landfill area, and (in the case of subsurface migration monitoring) meet regulatory requirements. The GCCS is designed to incorporate monitoring points at critical locations and to provide metering systems to both monitor landfill gas quality and quantity. Each critical monitoring point is discussed in this section.

5.1 Wellhead Monitoring

At each wellhead, monitoring will be performed on a monthly basis in accordance with §60.756(a) for the following parameters (at a minimum) to demonstrate compliance with the applicable thresholds:

- Gauge pressure in the gas collection header will be negative;
- Balance Gas (assumed to be nitrogen) will be less than 20%, or Oxygen will be less than 5% concentration; and
- Temperature will not exceed 55°C (131°F), unless an alternate threshold is approved by EPA.

Due to the design and interconnected nature all the arms associated with each radial collector, it is noted that sufficient vacuum may be applied through one (1) or more wellheads to control the entire radial collector. This may result in compliant readings at the wellhead(s) where vacuum is applied, while showing readings that appear to be exceedances at the remaining wellhead(s) for that specific radial collector. This may result in temporary closing of these wellheads exceeding the above parameters, but does not qualify as an actual "decommissioning" of a collection device, as defined in Subpart WWW, since LFG collection can occur through all arms, with vacuum only applied at one (1) arm.

5.2 Genset System Monitoring

For the genset system, electrical output and hours of operation will be continuously monitored by MP Wayne, LLC and the utility for billing purposes.

5.3 Back-up Flare System Monitoring

To the extent that the back-up flare system is operated, flame temperature and LFG flow will be continuously monitored through automated recording equipment, at a minimum frequency of 15 minutes. In addition, monitoring will be performed by personnel monthly, at a minimum, to maintain efficient operations and will include the following parameters (at a minimum):

- flame temperature;
- gas flow rate; and
- fail-safe shutoff valve operation.

5.4 Subsurface Migration Monitoring

As required by solid waste management regulations and in accordance with the currently

approved landfill gas monitoring plan, routine monitoring will be performed to identify (if any) subsurface migration of methane. This monitoring will be performed by Wayne County MSW Landfill personnel.

5.5 GCCS Maintenance

In addition to system monitoring, periodic maintenance will be conducted in accordance with the manufacturer's recommendations for each of the system components and in accordance with the facility closure and post-closure plan. Information from the various manufacturers of the system components will be compiled in the record documentation for the construction. The information will include, but not necessarily be limited to, suppliers and recommended maintenance for flare and/or blower components such as the flow meter, flow recorder, thermocouple, or other items. Additional maintenance is to be expected at the condensate traps, which will require periodic inspection and re-filling with water. Piping repairs may be required due to damage by equipment or because of localized settlement that causes condensate to accumulate in low-points of the system, potentially restricting or blocking the flow of LFG. Specific maintenance and repair procedures will be presented in the Operations and Maintenance Manual for the GCCS.

It is expected that, at various times during the life of the system, condensate blockages will develop due to settlement in pipes installed at small slopes over waste. In such cases, the affected pipes need to be excavated and low spots need to be identified and raised to provide continuous slope toward a condensate removal feature.

It is recommended that the Operator be trained in the operations and management of landfill gas systems and consult such references as Landfill Gas Operation & Maintenance Manual of Practice prepared by the Solid Waste Association of North America (SWANA) or other service firms specifically qualified in the operation of landfill gas systems.

6.0 REFERENCES

1. Standards of Performance for New Stationary Sources and Guidelines for Existing Sources: Municipal Solid Waste Landfills; Final Rule (NSPS); Federal Register Vol. 61, p. 9919, March 12, 1996, revisions through April 10, 2000, United States Environmental Protection Agency (EPA).

2. National Emission Standards for Hazardous Air Pollutants for Stationary Reciprocating Internal Combustion Engines; Final Rule (NESHAPs); Federal Register Vol. 75, p. 51588, August 20, 2010, revisions through March 9, 2011, EPA.

3. Standards of Performance for Stationary Spark Ignition Internal Combustion Engines; Final Rule (NSPS); Federal Register Vol. 73, p. 3591, January 18, 2008, revisions through June 28, 2011, EPA.

4. Compilation of Air Pollutant Emission Factors, Document AP-42, Fifth Edition, Section 2.4, Municipal Solid Waste Landfills, revised November 1998, EPA.

5. Mandatory Greenhouse Gas Reporting Rule; Federal Register Vol. 74, p. 56259, October 30, 2009, EPA.

6. Landfill Gas System Engineering Design - A Practical Approach - Based on a Decade of Experience, CES-LANDTEC Company, 2002, Colton, California.

7. Landfill Gas Emissions Model (LandGEM), V. 3.02, EPA, May 2005.

8. Pipe 2008, (Modeling Software for fluid flow in pipe networks), KY Pipe, LLC, Lexington, KY.

TABLE 1
Federal Air Regulations Compliance Matrix

Regulatory Citation	Regulatory Requirement	Plan Reference
•60.752(b)(2)(i)	Submit a collection and control system design plan prepared by a professional engineer to the Administrator within 1 year [of the calculated NMOC emission rate equaling or exceeding 50 megagrams per year].	Landfill Gas Collection & Control System Plan: Due date not applicable.
•60.752(b)(2)(i)(A)	The collection and control system shall meet the design requirements of paragraph (b)(2)(ii) of this section.	Section 2.0 ▪ Design Guidelines & Procedures: Plan conforms.
•60.752(b)(2)(i)(B)	The collection and control system design plan shall include any alternatives to the operational standards, test methods, procedures, compliance measures, monitoring, recordkeeping or reporting provisions of •60.753 through 60.758 proposed by the owner or operator.	Section 4.0 - Landfill Gas Collection System: No alternatives are proposed. Plan conforms.
•60.752(b)(2)(i)(C)	The collection and control system design plan shall either conform with specifications for active collection systems in •60.759 or include a demonstration to the Administrator•s satisfaction of the sufficiency of the alternative provisions to •60.759.	Section 4.0 ▪ Landfill Gas Collection System: An active system is proposed. Plan conforms.
•60.752(b)(2)(i)(D)	The Administrator shall review the information submitted under paragraphs (b)(2)(i) (A),(B) and (C) of this section and either approve it, disapprove it, or request that additional information be submitted. Because of the many site-specific factors involved with landfill gas system design, alternative systems may be necessary. A wide variety of system designs are possible, such as vertical wells, combination vertical and horizontal collection systems, or horizontal trenches only, leachate collection components, and passive systems.	Section 2.0 ▪ Design Guidelines & Procedures, and Section 4.0 ▪ Landfill Gas Collection System:
•60.752(b)(2)(ii)	Install a collection and control system that captures the gas generated within the landfill as required by paragraphs (b)(2)(ii)(A) or (B) and (b)(2)(iii) of this section within 30 months after the first annual report in which the emission rate equals or exceeds 50 megagrams per year, unless Tier 2 or Tier 3 sampling demonstrates that the emission rate is less than 50 megagrams per year, as specified in •60.757(c)(1) or (2).	Section 4.0 ▪ Landfill Gas Collection System: System installation due date is not applicable.

TABLE 1
Federal Air Regulations Compliance Matrix

Regulatory Citation	Regulatory Requirement	Plan Reference
•60.752(b)(2)(ii)(A)(1)	An active collection system shall be designed to handle the maximum expected gas flow rate from the entire area of the landfill that warrants control over the intended use period of the gas control or treatment system equipment;	Section 2.0 ▪ Design Guidelines & Procedures: Plan conforms.
•60.752(b)(2)(ii)(A)(2)	[An active collection system shall] collect gas from each area, cell, or group of cells in the landfill in which the initial solid waste has been placed for a period of: (i) 5 years or more if active; or (ii) 2 years or more if closed or at final grade.	Section 2.0 ▪ Design Guidelines & Procedures: Plan conforms.
•60.752(b)(2)(ii)(A)(3)	[An active collection system shall] collect gas at a sufficient extraction rate.	Section 2.0 ▪ Design Guidelines & Procedures Plan conforms.
•60.752(b)(2)(ii)(A)(4)	[An active collection system shall] be designed to minimize off-site migration of subsurface gas.	Section 2.0 ▪ Design Guidelines & Procedures: Plan conforms.
•60.752(b)(2)(iii)(A)	[Route all the collected gas to] an open flare designed and operated in accordance with •60.18;	Section 4.2.5 ▪ Flare System: Plan conforms.
•60.752(b)(2)(iii)(B)	[Route all the collected gas to] A control system designed and operated to reduce NMOC by 98 weight-percent, or, when an enclosed combustion device is used for control, to either reduce NMOC by 98 weight percent or reduce the outlet NMOC concentration to less than 20 parts per million by volume, dry basis as hexane at 3 percent oxygen.	Section 4.2.5 ▪ Flare System: Plan conforms in accordance with •60.752(b)(2)(iii)(C)
•60.752(b)(2)(iii)(B) *continued*	The reduction efficiency or parts per million by volume shall be established by an initial performance test to be completed no later than 180 days after the initial startup of the approved control system using the test methods specified in •60.754(d).	Not Applicable: Plan conforms in accordance with •60.752(b)(2)(iii)(C)
•60.752(b)(2)(iii)(B)(1)	If a boiler or process heater is used as the control device, the landfill gas stream shall be introduced into the flame zone.	Not Applicable.
•60.752(b)(2)(iii)(B)(2)	The control device shall be operated within the parameter ranges established during the initial or most recent performance test. The operating parameters to be monitored are specified in •60.756.	Section 5.2 ▪ Flare System Monitoring: Plan conforms.

TABLE 1
Federal Air Regulations Compliance Matrix

Regulatory Citation	Regulatory Requirement	Plan Reference
•60.752(b)(2)(iii)(C)	Route the collected gas to a treatment system that processes the collected gas for subsequent sale or use. All emissions from any atmospheric vent from the gas treatment system shall be subject to the requirements of paragraph (b)(2)(iii) (A) or (B) of this section.	4.2.5 ▪ Flare System: Plan conforms.
•60.759(a)	Each owner or operator seeking to comply with •60.752(b)(2)(i) shall site active collection wells, horizontal collectors, surface collectors, or other extraction devices at a sufficient density throughout all gas producing areas using the following procedures unless alternative procedures have been approved by the Administrator as provided in •60.752(b)(2)(i)(C) and (D):	Section 4.2.1 ▪ Extraction Wells: Plan conforms.
•60.759(a)(1)	The collection devices within the interior and along the perimeter areas shall be certified to achieve comprehensive control of surface gas emissions by a professional engineer. The following issues shall be addressed in the design:	Not applicable. No certification required at this time.
	Depths of refuse;	Section 4.2.1 ▪ Extraction Wells: Plan conforms.
	Refuse gas generation rates and flow characteristics;	Section 3.0 ▪ Landfill Gas Generation: Plan conforms.
	Cover properties;	Section 4.2.6 ▪ Final Cover: Plan conforms.
	Gas system expandability;	Section 4.0 ▪ Landfill Gas Collection System: Plan conforms.
	Leachate and condensate management;	Section 4.2.4 ▪ Condensate Management: Plan conforms.
	Accessibility; compatibility with filling operations; and integration with closure end use;	Section 5.0 ▪ Monitoring and Maintenance: Plan conforms.
	Air intrusion control;	Section 4.2.1 ▪ Extraction Wells, and Section 4.2.6 ▪ Final Cover: Plan conforms.
	Corrosion resistance;	Section 4.2 ▪ System Components: Plan conforms.

TABLE 1
Federal Air Regulations Compliance Matrix

Regulatory Citation	Regulatory Requirement	Plan Reference
•60.759(a)(1) *continued*	Fill settlement; and	Section 4.2.3 ▪ Transmission Piping: Plan conforms.
	Resistance to the refuse decomposition heat.	Section 4.2 ▪ System Components: Plan conforms.
•60.759(a)(2)	The sufficient density of gas collection devices determined in paragraph (a)(1) of this section shall address landfill gas migration issues and augmentation of the collection system through the use of active or passive systems at the landfill perimeter or exterior.	Section 5.3 ▪ Subsurface Migration Monitoring: Plan conforms.
•60.759(a)(3)	The placement of gas collection devices determined in paragraph (a)(1) of this section shall control all gas producing areas, except as provided by paragraphs (a)(3)(i) and (a)(3)(ii) of this section.	Section 1.3 ▪ Existing Site Conditions: Plan conforms.
•60.759(a)(3)(i)	Any segregated area of asbestos or nondegradable material may be excluded from collection if documented as provided under •60.758(d). The documentation shall provide the nature, date of deposition, location and amount of asbestos or nondegradable material deposited in the area, and shall be provided to the Administrator upon request.	Section 1.3 ▪ Existing Site Conditions: Plan conforms.
•60.759(a)(3)(ii)	Any nonproductive area of the landfill may be excluded from control, provided that the total of all excluded areas can be shown to contribute less than 1 percent of the total amount of NMOC emissions from the landfill.	Not Applicable.
•60.759(b)	Each owner or operator seeking to comply with •60.752(b)(2)(i)(A) shall construct the gas collection devices using the following equipment or procedures:	See the following:

TABLE 1
Federal Air Regulations Compliance Matrix

Regulatory Citation	Regulatory Requirement	Plan Reference
•60.759(b)(1)	The landfill gas extraction components shall be constructed of polyvinyl chloride (PVC), high density polyethylene (HDPE) pipe, fiberglass, stainless steel, or other nonporous corrosion resistant material of suitable dimensions to: convey projected amounts of gases; withstand installation, static, and settlement forces; and withstand planned overburden or traffic loads. The collection system shall extend as necessary to comply with emission and migration standards. Collection devices such as wells and horizontal collectors shall be perforated to allow gas entry without head loss sufficient to impair performance across the intended extent of control. Perforations shall be situated with regard to the need to prevent excessive air infiltration.	Section 4.2.1 ▪ Extraction Wells; Section 4.2.2 ▪ Wellheads; Section 4.2.3 ▪ Transmission Piping; Section 4.2.4 ▪ Condensate Management; and Section 4.2.5 ▪ Flare System: Plan conforms.
•60.759(b)(2)	Vertical wells shall be placed so as not to endanger underlying liners and shall address the occurrence of water within the landfill. Holes and trenches constructed for piped wells and horizontal collectors shall be of sufficient cross-section so as to allow for their proper construction and completion including, for example, centering of pipes and placement of gravel backfill. Collection devices shall be designed so as not to allow indirect short circuiting of air into the cover or refuse into the collection system or gas into the air. Any gravel used around pipe perforations should be of a dimension so as not to penetrate or block perforations.	Section 4.2.1 ▪ Extraction Wells; and Section 4.2.6 ▪ Final Cover: Plan conforms.
•60.759(b)(3)	Collection devices may be connected to the collection header pipes below or above the landfill surface. The connector assembly shall include a positive closing throttle valve, any necessary seals and couplings, access couplings, and at least one sampling port. The collection devices shall be constructed of PVC, HDPE, fiberglass, stainless steel, or other nonporous material of suitable thickness.	Section 4.2.2 ▪ Wellheads: Plan conforms.

TABLE 1
Federal Air Regulations Compliance Matrix

Regulatory Citation	Regulatory Requirement	Plan Reference
•60.759(c)	Each owner or operator seeking to comply with •60.752(b)(2)(i)(A) shall convey the landfill gas to a control system in compliance with •60.752(b)(2)(iii) through the collection header pipe(s). The gas mover equipment shall be sized to handle the maximum gas generation flow rate expected over the intended use period of the gas moving equipment using the following procedures:	Section 4.2.3 ▪ Transmission Piping; and Section 4.2.5 ▪ Flare System: Plan conforms.
•60.759(c)(1)	For existing collection systems, the flow data shall be used to project the maximum flow rate. If no flow data exists, the procedures in paragraph (c)(2) of this section shall be used.	See the following condition.
•60.759(c)(2)	For new collection systems, the maximum flow rate shall be in accordance with •60.755(a)(1).	Section 3.4 ▪ Landfill Gas Generation Rate: Plan conforms.

TABLE 2
State Air and Solid Waste Regulations Compliance Matrix

Regulatory Citation	Regulatory Requirement	Plan Reference
15A NCAC 2D .0516	Sulfur dioxide emissions from the flare shall not exceed 2.3 pounds per million Btu heat input.	Section 5.3 ▪ Back-up Flare System Monitoring Plan conforms.
15A NCAC 2D .0521	Visible emissions from the flare shall not be more than 20 percent opacity when averaged over a six-minute period.	Section 5.3 ▪ Back-up Flare System Monitoring Plan conforms..
15A NCAC 2D .0524	NMOC emissions shall be controlled by a gas collection and control system that routes gas to an open flare designed in accordance with 40 CFR 60.18, or routes the landfill gas to a treatment system in accordance with 40 CFR 60.752(b)2(2)(iii)(C). Submit a gas collection and control design plan for a landfill having a design capacity equal or greater than 2.5 million megagrams by mass and 2.5 million cubic meters, and with a calculated NMOC emission rate equal to or greater than 50 megagrams per year. Monitoring shall include measuring the gauge pressure in the gas collection header, oxygen concentration in the landfill gas, and temperature on a monthly basis. Surface concentrations of methane along the entire perimeter of the collection area shall be measured on a quarterly basis. Semi-annual monitoring and recordkeeping activities reports shall be submitted to NC DAQ. All records related to the monitoring, maintenance, and reporting requirements shall be kept for at least five years.	Section 4.0 ▪ Landfill gas collection system. Plan conforms.
15A NCAC 2D .1111 (40 CFR 63, Subpart AAAA)	The landfill shall comply with all MACT and NESHAPs requirements. Compliance with Subpart AAAA is determined in accordance with the NSPS Subpart WWW rules. The facility must develop and implement a written Start-up/Shutdown/Malfunction plan according to 40 CFR 63.6(e)(3).	Section 5.0 ▪ Monitoring and Maintenance Plan conforms.
15A NCAC 2D .1111 (40 CFR 63, Subpart ZZZZ)	Owners and operators of new stationary RICE at area sources of HAP emissions shall meet the requirements of the final spark ignition NSPS (40 CFR 60, Subpart JJJJ).	Section 5.0 ▪ Monitoring and Maintenance Plan conforms.
15A NCAC 2D .1806	The Permittee shall not operate the facility without implementing management practices or installing and operating odor control equipment sufficient to prevent odorous emissions from the facility from causing or contributing to objectionable odors beyond the	Section 5.0 ▪ Monitoring and Maintenance Plan conforms.

TABLE 2
State Air and Solid Waste Regulations Compliance Matrix

	facility's boundary.	
15A NCAC 2Q .0705	Through an air toxic compliance demonstration, the facility must not exceed permit limits for toxic air pollutants as set forth in the permit document.	Section 5.0 ▪ Monitoring and Maintenance Plan conforms.

APPENDIX A

CALCULATIONS

WAYNE COUNTY LANDFILL

LANDFILL GAS SYSTEM CALCULATIONS

TABLE OF CONTENTS

1.0 Landfill Gas Emissions Model, Version 3.02

2.0 Blower and Wellfield Analysis

3.0 Radial Collector Analysis

4.0 Pressure Distribution
- 4.1 Existing
- 4.2 Proposed Carlson Design
- 4.3 Radial Collector

1.0 LANDFILL GAS EMISSIONS MODEL

MP Wayne, LLC - Wayne County Landfill
Landfill Gas Generation and Collection Estimate

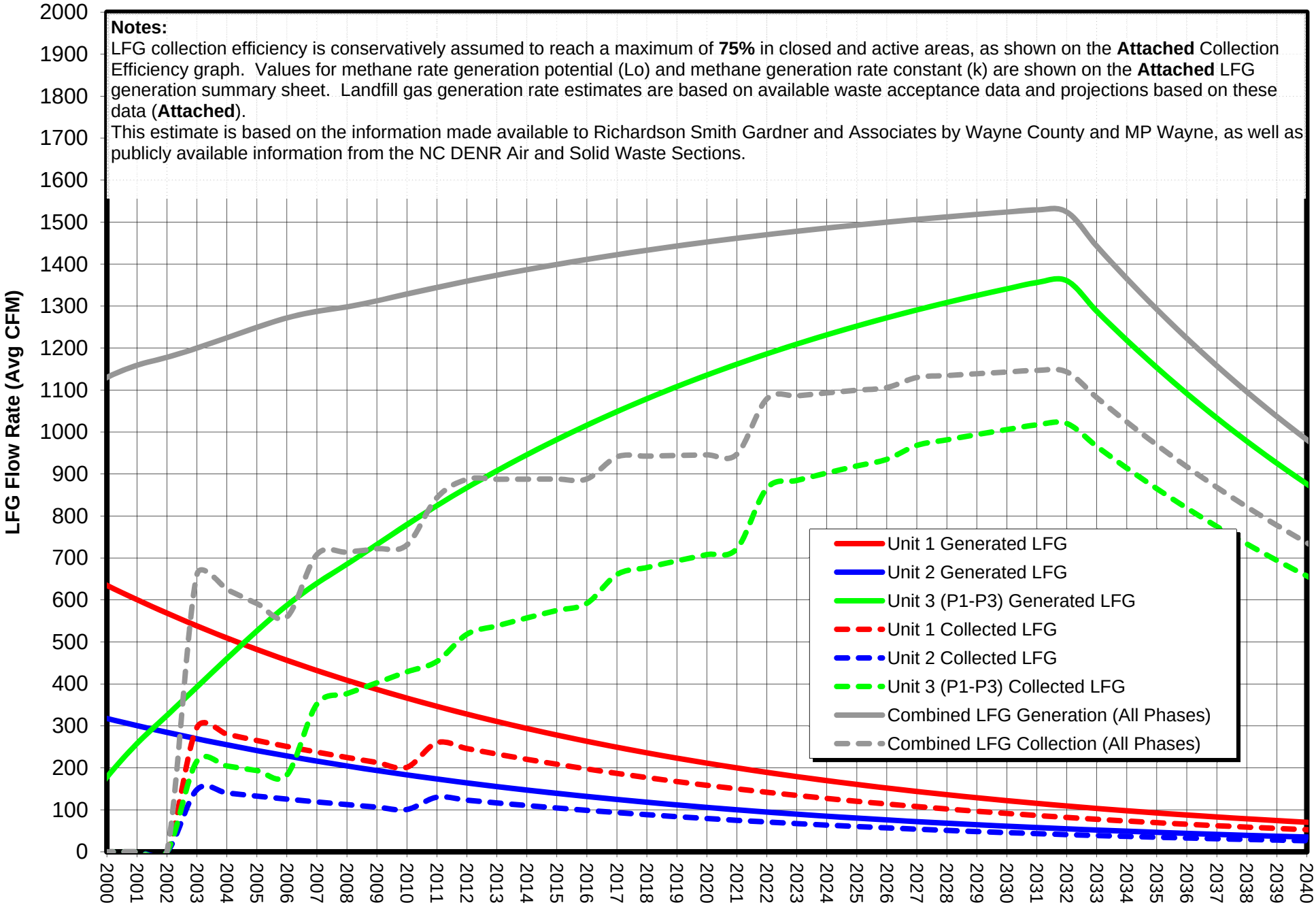

MP Wayne, LLC - Wayne County Landfill
Landfill Gas Collection Efficiency Estimate

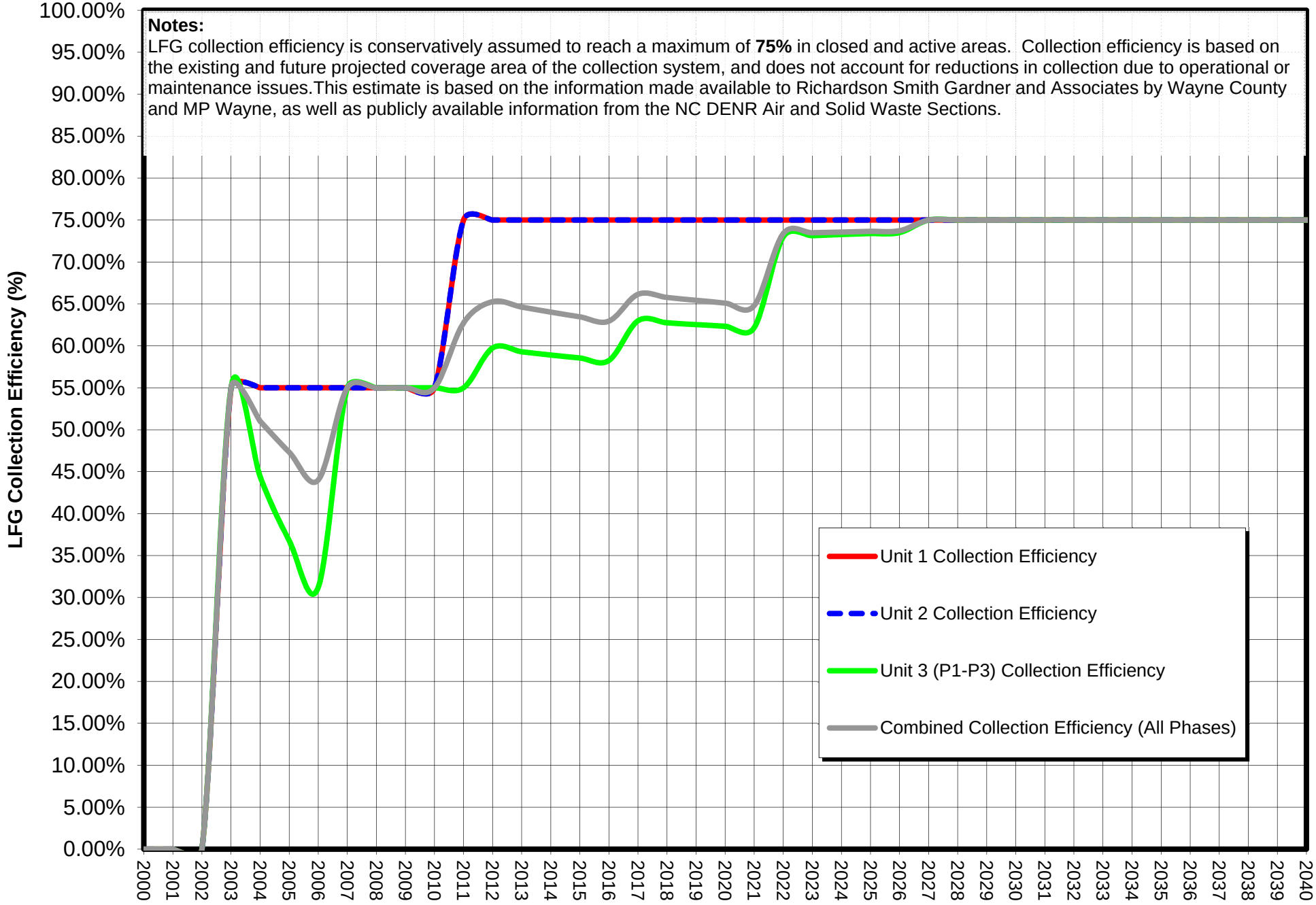

MP Wayne, LLC - Wayne County Landfill Gas Generation Summary Sheet k= 0.055 Lo= 147

	Unit 1				Unit 2				Unit 3 Phase 1				Unit 3 Phase 2				Unit 3 Phase 3				Unit 3 Phases 1-3				All Phases			
Year	Generated LFG (cf/yr)	Generated LFG (cfm)	Collected LFG (cfm)	Collection Efficiency	Generated LFG (cf/yr)	Generated LFG (cfm)	Collected LFG (cfm)	Collection Efficiency	Generated LFG (cf/yr)	Generated LFG (cfm)	Collected LFG (cfm)	Collection Efficiency	Generated LFG (cf/yr)	Generated LFG (cfm)	Collected LFG (cfm)	Collection Efficiency	Generated LFG (cf/yr)	Generated LFG (cfm)	Collected LFG (cfm)	Collection Efficiency	Generated LFG (cf/yr)	Generated LFG (cfm)	Collected LFG (cfm)	Collection Efficiency	Generated LFG (cf/yr)	Generated LFG (cfm)	Collected LFG (cfm)	Collection Efficiency
1973	0	0	0	0.00%	0	0	0	0%	0	0	0	0%	0	0	0	0%	0	0	0	0%	0	0	0	0%	0	0	0	0%
1974	39,651,074	75	0	0.00%	0	0	0	0%	0	0	0	0%	0	0	0	0%	0	0	0	0%	0	0	0	0%	0	75	0	0%
1975	77,180,227	147	0	0.00%	0	0	0	0%	0	0	0	0%	0	0	0	0%	0	0	0	0%	0	0	0	0%	0	147	0	0%
1976	112,701,012	214	0	0.00%	0	0	0	0%	0	0	0	0%	0	0	0	0%	0	0	0	0%	0	0	0	0%	0	214	0	0%
1977	146,320,908	278	0	0.00%	0	0	0	0%	0	0	0	0%	0	0	0	0%	0	0	0	0%	0	0	0	0%	0	278	0	0%
1978	178,141,641	339	0	0.00%	0	0	0	0%	0	0	0	0%	0	0	0	0%	0	0	0	0%	0	0	0	0%	0	339	0	0%
1979	208,259,491	396	0	0.00%	0	0	0	0%	0	0	0	0%	0	0	0	0%	0	0	0	0%	0	0	0	0%	0	396	0	0%
1980	236,765,589	450	0	0.00%	0	0	0	0%	0	0	0	0%	0	0	0	0%	0	0	0	0%	0	0	0	0%	0	450	0	0%
1981	224,095,114	426	0	0.00%	0	0	0	0%	0	0	0	0%	0	0	0	0%	0	0	0	0%	0	0	0	0%	0	426	0	0%
1982	212,102,697	404	0	0.00%	0	75	0	0%	0	0	0	0%	0	0	0	0%	0	0	0	0%	0	0	0	0%	0	479	0	0%
1983	200,752,053	382	0	0.00%	0	147	0	0%	0	0	0	0%	0	0	0	0%	0	0	0	0%	0	0	0	0%	0	529	0	0%
1984	190,008,836	362	0	0.00%	0	214	0	0%	0	0	0	0%	0	0	0	0%	0	0	0	0%	0	0	0	0%	0	576	0	0%
1985	179,840,541	342	0	0.00%	0	278	0	0%	0	0	0	0%	0	0	0	0%	0	0	0	0%	0	0	0	0%	0	621	0	0%
1986	170,216,401	324	0	0.00%	0	339	0	0%	0	0	0	0%	0	0	0	0%	0	0	0	0%	0	0	0	0%	0	663	0	0%
1987	161,107,296	307	0	0.00%	0	396	0	0%	0	0	0	0%	0	0	0	0%	0	0	0	0%	0	0	0	0%	0	703	0	0%
1988	152,485,663	290	0	0.00%	0	450	0	0%	0	0	0	0%	0	0	0	0%	0	0	0	0%	0	0	0	0%	0	741	0	0%
1989	144,325,415	275	0	0.00%	0	502	0	0%	0	0	0	0%	0	0	0	0%	0	0	0	0%	0	0	0	0%	0	776	0	0%
1990	192,969,052	367	0	0.00%	0	550	0	0%	0	0	0	0%	0	0	0	0%	0	0	0	0%	0	0	0	0%	0	918	0	0%
1991	232,059,298	442	0	0.00%	0	521	0	0%	0	0	0	0%	0	0	0	0%	0	0	0	0%	0	0	0	0%	0	962	0	0%
1992	271,254,339	516	0	0.00%	0	493	0	0%	0	0	0	0%	0	0	0	0%	0	0	0	0%	0	0	0	0%	0	1009	0	0%
1993	303,698,621	578	0	0.00%	0	467	0	0%	0	0	0	0%	0	0	0	0%	0	0	0	0%	0	0	0	0%	0	1044	0	0%
1994	331,501,351	631	0	0.00%	0	442	0	0%	0	0	0	0%	0	0	0	0%	0	0	0	0%	0	0	0	0%	0	1072	0	0%
1995	359,852,364	685	0	0.00%	0	418	0	0%	0	0	0	0%	0	0	0	0%	0	0	0	0%	0	0	0	0%	0	1103	0	0%
1996	392,912,616	748	0	0.00%	0	396	0	0%	0	0	0	0%	0	0	0	0%	0	0	0	0%	0	0	0	0%	0	1143	0	0%
1997	393,385,992	748	0	0.00%	196,842,749	375	0	0%	0	0	0	0%	0	0	0	0%	0	0	0	0%	0	0	0	0%	0	1123	0	0%
1998	372,333,998	708	0	0.00%	186,308,739	354	0	0.00%	0	0	0	0.00%	0	0	0	0.00%	0	0	0	0.00%	0	0	0	#DIV/0!	558,642,737	1063	0	0.00%
1999	352,408,600	670	0	0.00%	176,338,454	335	0	0.00%	43,918,006	84	0	0.00%	0	0	0	0.00%	0	0	0	0.00%	43,918,006	84	0	0.00%	572,665,060	1090	0	0.00%
2000	333,549,505	635	0	0.00%	166,901,728	318	0	0.00%	93,520,402	178	0	0.00%	0	0	0	0.00%	0	0	0	0.00%	93,520,402	178	0	0.00%	593,971,635	1130	0	0.00%
2001	315,699,653	601	0	0.00%	157,970,007	301	0	0.00%	135,483,151	258	0	0.00%	0	0	0	0.00%	0	0	0	0.00%	135,483,151	258	0	0.00%	609,152,811	1159	0	0.00%
2002	298,805,033	569	0	0.00%	149,516,265	284	0	0.00%	170,715,827	325	0	0.00%	0	0	0	0.00%	0	0	0	0.00%	170,715,827	325	0	0.00%	619,037,125	1178	0	0.00%
2003	282,814,526	538	296	55.00%	141,514,924	269	148	55.00%	206,374,693	393	216	55.00%	0	0	0	0.00%	0	0	0	0.00%	206,374,693	393	216	55.00%	630,704,143	1200	660	55.00%
2004	267,679,748	509	280	55.00%	133,941,774	255	140	55.00%	195,369,652	372	204	55.00%	46,533,436	89	0	0.00%	0	0	0	0.00%	241,903,088	460	204	44.42%	643,524,610	1224	625	51.02%
2005	253,354,906	482	265	55.00%	126,773,900	241	133	55.00%	184,951,461	352	194	55.00%	91,588,128	174	0	0.00%	0	0	0	0.00%	276,539,588	526	194	36.78%	656,668,394	1249	591	47.33%
2006	239,796,656	456	251	55.00%	119,989,613	228	126	55.00%	175,088,825	333	183	55.00%	133,644,688	254	0	0.00%	0	0	0	0.00%	308,733,512	587	183	31.19%	668,519,782	1272	560	44.00%
2007	226,963,973	432	238	55.00%	113,568,387	216	119	55.00%	165,752,119	315	173	55.00%	170,434,879	324	178	55.00%	0	0	0	0.00%	336,186,998	640	352	55.00%	676,719,358	1288	708	55.00%
2008	214,818,030	409	225	55.00%	107,490,792	205	112	55.00%	156,913,299	299	164	55.00%	203,027,635	386	212	55.00%	0	0	0	0.00%	359,940,934	685	377	55.00%	682,249,755	1298	714	55.00%
2009	203,322,075	387	213	55.00%	101,738,438	194	106	55.00%	148,545,813	283	155	55.00%	236,147,861	449	247	55.00%	0	0	0	0.00%	384,693,674	732	403	55.00%	689,754,186	1312	722	55.00%
2010	192,441,324	366	201	55.00%	96,293,920	183	101	55.00%	140,624,528	268	147	55.00%	269,095,705	512	282	55.00%	0	0	0	0.00%	409,720,233	780	429	55.00%	698,455,477	1329	731	55.00%
2011	182,142,855	347	260	75.00%	91,140,765	173	130	75.00%	133,125,649	253	139	55.00%	300,280,350	571	314	55.00%	0	0	0	0.00%	433,406,000	825	454	55.00%	706,689,620	1345	843	62.73%
2012	172,395,507	328	246	75.00%	86,263,381	164	123	75.00%	126,026,653	240	144	60.00%	307,003,523	584	350	60.00%	22,792,631	43	24	55.00%	455,822,807	867	518	59.75%	714,481,695	1359	887	65.27%
2013	163,169,787	310	233	75.00%	81,647,009	155	117	75.00%	119,306,214	227	136	60.00%	290,574,275	553	332	60.00%	67,158,149	128	70	55.00%	477,038,638	908	538	59.30%	721,855,434	1373	888	64.62%
2014	154,437,780	294	220	75.00%	77,277,681	147	110	75.00%	112,944,146	215	129	60.00%	275,024,236	523	314	60.00%	109,149,453	208	114	55.00%	497,117,834	946	557	58.90%	728,833,296	1387	888	64.02%
2015	146,173,065	278	209	75.00%	73,142,177	139	104	75.00%	106,921,339	203	122	60.00%	260,306,354	495	297	60.00%	148,893,598	283	156	55.00%	516,121,291	982	575	58.56%	735,436,534	1399	888	63.46%
2016	138,350,635	263	197	75.00%	69,227,985	132	99	75.00%	101,219,701	193	116	60.00%	246,376,098	469	281	60.00%	186,510,841	355	195	55.00%	534,106,641	1016	592	58.25%	741,685,261	1411	888	62.94%
2017	130,946,821	249	187	75.00%	65,523,259	125	93	75.00%	95,822,107	182	119	65.00%	233,191,318	444	288	65.00%	222,115,003	423	254	60.00%	551,128,428	1049	660	62.98%	747,598,508	1422	941	66.14%
2018	123,939,222	236	177	75.00%	62,016,792	118	88	75.00%	90,712,341	173	112	65.00%	220,712,119	420	273	65.00%	255,813,814	487	292	60.00%	567,238,274	1079	677	62.75%	753,194,288	1433	943	65.77%
2019	117,306,632	223	167	75.00%	58,697,972	112	84	75.00%	85,875,057	163	106	65.00%	208,900,743	397	258	65.00%	287,709,238	547	328	60.00%	582,485,037	1108	693	62.53%	758,489,642	1443	944	65.42%
2020	111,028,985	211	158	75.00%	55,556,759	106	79	75.00%	81,295,724	155	101	65.00%	197,721,450	376	245	65.00%	317,897,783	605	363	60.00%	596,914,957	1136	708	62.34%	763,500,701	1453	946	65.10%
2021	105,087,286	200	150	75.00%	52,583,647	100	75	75.00%	76,960,586	146	95	65.00%	187,140,416	356	231	65.00%	346,470,792	659	396	60.00%	610,571,794	1162	722	62.16%	768,242,727	1462	947	64.80%
2022	99,463,555	189	142	75.00%	49,769,641	95	71	75.00%	72,856,621	139	97	70.00%	177,125,624	337	236	70.00%	373,514,721	711	533	75.00%	623,496,966	1186	866	73.00%	772,730,163	1470	1079	73.38%
2023	94,140,778	179	134	75.00%	47,106,226	90	67	75.00%	68,971,503	131	92	70.00%	167,646,773	319	223	70.00%	399,111,398	759	570	75.00%	635,729,674	1210	885	73.14%	776,976,678	1478	1086	73.48%
2024	89,102,848	170	127	75.00%	44,585,343	85	64	75.00%	65,293,560	124	87	70.00%	158,675,181	302	211	70.00%	423,338,273	805	604	75.00%	647,307,014	1232	902	73.27%	780,995,205	1486	1093	73.57%
2025	84,334,522	160	120	75.00%	42,199,365	80	60	75.00%	61,811,746	118	82	70.00%	150,183,702	286	200	70.00%	446,268,650	849	637	75.00%	658,264,098	1252	919	73.39%	784,797,986	1493	1100	73.65%
2026	79,821,373	152	114	75.00%	39,941,073	76	57	75.00%	58,515,602	111	78	70.00%	142,146,643	270	189	70.00%	467,971,911	890	668	75.00%	668,634,156	1272	935	73.50%	788,396,602	1500	1106	73.73%
2027	75,549,744	144	108	75.00%	37,803,632	72	54	75.00%	55,395,226	105	79	75.00%	134,539,687	256	192	75.00%	488,513,726	929	697	75.00%	678,448,638	1291	968	75.00%	791,802,014	1506	1130	75.00%
2028	71,506,710	136	102	75.00%	35,780,576	68	51	75.00%	52,441,246	100	75	75.00%	127,339,815	242	182	75.00%	507,956,248	966	725	75.00%	687,737,309	1308	981	75.00%	795,024,596	1513	1134	75.00%
2029	67,680,039	129	97	75.00%	33,865,784	64	48	75.00%	49,644,788	94	71	75.00%	120,525,244	229	172	75.00%	526,358,307	1001	751	75.00%	696,528,339	1325	994	75.00%	798,074,162	1518	1139	75.00%
2030	64,058,152	122	91	75.00%	32,053,462	61	46	75.00%	46,997,453	89	67	75.00%	114,075,353	217	163	75.00%	543,775,582	1035	776	75.00%	704,848,389	1341	1006	75.00%	800,960,002	1524	1143	75.00%
2031	60,630,090	115	87	75.00%	30,338,125	58	43	75.00%	44,491,289	85	63	75.00%	107,970,628	205	154	75.00%	560,260,775	1066	799	75.00%	712,722,691	1356	1017	75.00%	803,690,906	1529	1147	75.00%
2032	57,385,479	109	82	75.00%	28,714,585	55	41	75.00%	42,118,767	80	60	75.00%	102,192,595	194	146	75.00%	570,709,591	1086	814	75.00%	715,020,953	1360	1020	75.00%	801,121,017	1524	1143	75.00%
2033	54,314,504	103	78	75.00%	27,177,928	52	39	75.00%	39,872,761	76	57	75.00%	96,723,774	184	138	75.00%	540,168,151	1028	771	75.00%	676,764,686	1288	966	75.00%	758,257,118	1443	1082	75.00%
2034	51,407,871	98	73	75.00%	25,723,505	49	37	75.00%	37,746,525	72	54	75.00%	91,547,615	174	131	75.00%	511,261,133	973	730	75.00%	640,555,273	1219	914	75.00%	717,686,650	1365	1024	75.00%
2035	48,656,787	93	69	75.00%	24,346,916	46	35	75.00%	35,733,671	68	51	75.00%	86,648,458	165	124	75.00%	483,901,069	921	690	75.00%	606,283,198	1154	865	75.00%	679,286,901	1292	969	75.00%
2036	46,052,926	88	66	75.00%	23,043,994	44	33	75.00%	33,828,154	64	48	75.00%	82,011,479	156	117	75.00%	458,005,175	871	654	75.00%	573,844,808	1092	819	75.00%	642,941,728	1223	917	75.00%
2037	43,588,410	83	62	75.00%	21,810,798	41	31	75.00%	32,024,250	61	46	75.00%	77,622,647	148	111	75.00%	433,495,096	825	619	75.00%	543,141,992	1033	775	75.00%	608,541,200	1158	868	75.00%
2038	41,255,783	78	59	75.00%	20,643,597	39	29	75.00%	30,316,539	58	43	75.00%	73,468,682	140	105	75.00%	410,296,670	781	585	75.00%	514,081,891	978	734	75.00%	575,981,271	1096	822	75.00%
2039	39,047,986	74	56	75.00%	19,538,858	37	28	75.00%	28,699,894	55	41	75.00%	69,537,017	132	99	75.00%	388,339,704	739	554	75.00%	486,576,614	926	694	75.00%	545,163,458	1037	778	75.00%
2040	36,958,339	70	53	75.00%	18,493,239	35	26	75.00%	27,169,456	52	39	75.00%	65,815,753	125	94	75.00%	367,557,762	699	524	75.00%	460,542,972	876	657	75.00%	515,994,549	982	736	75.00%
2041	34,980,519	67	50	75.00%	17,503,576	33	25	75.00%	25,720,631	49	37	75.00%	62,293,633	119	89	75.00%	347,887,963	662	496	75.00%	435,902,227	829	622	75.00%	488,386,321	929	697	75.00%
2042	33,108,541	63	47	75.00%	16,566,874	32	24	75.00%	24,349,064	46	35	75.00%	58,959,999	112	84	75.00%	329,270,790	626	470	75.00%	412,579,853	785	589	75.00%	462,255,269	879	660	75.00%
2043	31,336,743	60	45	75.00%	15,680,301	30	22	75.00%	23,050,637	44	33	75.00%	55,804,763	106	80	75.00%	311,649,912	593	445	75.00%	390,505,313	743	557	75.00%	437,522,356	832	624	75.00%
2044	29,659,762	56	42	75.00%	14,841,172	28	21	75.00%	21,821,450	42	31	75.00%	52,818,379	100	75	75.00%	294,972,014	561	421	75.00%	369,611,843	703	527	75.00%	414,112,776	788	591	75.00%
2045	28,072,524	53	40	75.00%	14,046,949	27	20	75.00%	20,657,809	39	29	75.00%	49,991,812	95	71	75.00%	279,186,630	531	398	75.00%	349,836,251	666	499	75.00%	391,955,723	746	559	75.00%
2046	26,570,227	51	38	75.00%	13,295,228	25	19	75.00%	19,556,220	37	28	75.00%	47,316,507	90	68	75.00%	264,245,999	503	377	75.00%	331,118,726	630	472	75.00%	370,984,181	706	529	75.00%
2047	25,148,325	48	36	75.00%	12,583,736	24	18	75.00%	18,513,374	35	26	75.00%	44,784,371	85	64	75.00%	250,104,913	476	357	75.00%	313,402,659	596	447	75.00%	351,134,720	668	501	75.00%
2048	23,802,516	45	34	75.00%	11,910,319	23	17	75.00%	17,526,139	33	25	75.00%	42,387,742	81	60	75.00%	236,720,586	450	338	75.00%	296,634,467	564	423	75.00%	332,347,302	632	474	75.00%
2049	22,528,728	43	32	75.00%	11,272,940	21	16	75.00%	16,591,548	32	24	75.00%	40,119,369	76	57	75.00%	224,052,519	426	320	75.00%	280,763,435	534	401	75.00%	314,565,104	598	449	75.00%
2050	21,323,106	41	30	75.00%	10,669,671	20	15	75.00%	15,706,795	30	22	75.00%	37,972,386	72	54	75.00%	212,062,381	403	303	75.00%	265,741,563	506	379	75.00%	297,734,340	566	425	75.00%
2051	20,182,004	38	29	75.00%	10,098,685	19	14	75.00%	14,869,222	28	21	75.00%	35,940,300	68	51	75.00%	200,713,894	382	286	75.00%	251,523,416	479	359	75.00%	281,804,104	536	402	75.00%
2052	19,101,967	36	27	75.00%	9,558,255	18	14	75.00%	14,076,312	27	20	75.00%	34,016,960	65	49	75.00%	189,972,720	361	271	75.00%	238,065,992	453	340	75.00%	266,726,214	507	381	75.00%
2053	18,079,728	34	26	75.00%	9,046,746	17	13	75.00%	13,325,686	25	19	75.00%	32,196,547	61	46	75.00%	179,806,358	342	257	75.00%	225,328,591	429	322	75.00%	252,455,065	480	360	75.00%

MP Wayne, LLC - Wayne County Landfill Gas Generation Summary Sheet k= 0.055 Lo= 147

	Unit 1				Unit 2				Unit 3 Phase 1				Unit 3 Phase 2				Unit 3 Phase 3				Unit 3 Phases 1-3				All Phases			
Year	Generated LFG (cf/yr)	Generated LFG (cfm)	Collected LFG (cfm)	Collection Efficiency	Generated LFG (cf/yr)	Generated LFG (cfm)	Collected LFG (cfm)	Collection Efficiency	Generated LFG (cf/yr)	Generated LFG (cfm)	Collected LFG (cfm)	Collection Efficiency	Generated LFG (cf/yr)	Generated LFG (cfm)	Collected LFG (cfm)	Collection Efficiency	Generated LFG (cf/yr)	Generated LFG (cfm)	Collected LFG (cfm)	Collection Efficiency	Generated LFG (cf/yr)	Generated LFG (cfm)	Collected LFG (cfm)	Collection Efficiency	Generated LFG (cf/yr)	Generated LFG (cfm)	Collected LFG (cfm)	Collection Efficiency
2054	17,112,194	33	24	75.00%	8,562,611	16	12	75.00%	12,615,086	24	18	75.00%	30,473,554	58	43	75.00%	170,184,047	324	243	75.00%	213,272,687	406	304	75.00%	238,947,492	455	341	75.00%
2055	16,196,437	31	23	75.00%	8,104,384	15	12	75.00%	11,942,380	23	17	75.00%	28,842,766	55	41	75.00%	161,076,673	306	230	75.00%	201,861,819	384	288	75.00%	226,162,641	430	323	75.00%
2056	15,329,687	29	22	75.00%	7,670,679	15	11	75.00%	11,305,546	22	16	75.00%	27,299,250	52	39	75.00%	152,456,679	290	218	75.00%	191,061,475	364	273	75.00%	214,061,841	407	305	75.00%
2057	14,509,321	28	21	75.00%	7,260,184	14	10	75.00%	10,702,672	20	15	75.00%	25,838,335	49	37	75.00%	144,297,982	275	206	75.00%	180,838,989	344	258	75.00%	202,608,494	385	289	75.00%
2058	13,732,857	26	20	75.00%	6,871,656	13	10	75.00%	10,131,946	19	14	75.00%	24,455,600	47	35	75.00%	136,575,897	260	195	75.00%	171,163,443	326	244	75.00%	191,767,957	365	274	75.00%
2059	12,997,945	25	19	75.00%	6,503,921	12	9	75.00%	9,591,655	18	14	75.00%	23,146,862	44	33	75.00%	129,267,058	246	184	75.00%	162,005,575	308	231	75.00%	181,507,441	345	259	75.00%
2060	12,302,362	23	18	75.00%	6,155,864	12	9	75.00%	9,080,175	17	13	75.00%	21,908,161	42	31	75.00%	122,349,351	233	175	75.00%	153,337,686	292	219	75.00%	171,795,913	327	245	75.00%
2061	11,644,003	22	17	75.00%	5,826,434	11	8	75.00%	8,595,969	16	12	75.00%	20,735,749	39	30	75.00%	115,801,843	220	165	75.00%	145,133,562	276	207	75.00%	162,603,999	309	232	75.00%
2062	11,020,876	21	16	75.00%	5,514,633	10	8	75.00%	8,137,585	15	12	75.00%	19,626,079	37	28	75.00%	109,604,725	209	156	75.00%	137,368,388	261	196	75.00%	153,903,898	293	220	75.00%
2063	10,431,095	20	15	75.00%	5,219,519	10	7	75.00%	7,703,644	15	11	75.00%	18,575,792	35	27	75.00%	103,739,244	197	148	75.00%	130,018,680	247	186	75.00%	145,669,294	277	208	75.00%
2064	9,872,877	19	14	75.00%	4,940,197	9	7	75.00%	7,292,843	14	10	75.00%	17,581,711	33	25	75.00%	98,187,654	187	140	75.00%	123,062,208	234	176	75.00%	137,875,282	262	197	75.00%
2065	9,344,531	18	13	75.00%	4,675,823	9	7	75.00%	6,903,948	13	10	75.00%	16,640,828	32	24	75.00%	92,933,156	177	133	75.00%	116,477,932	222	166	75.00%	130,498,287	248	186	75.00%
2066	8,844,460	17	13	75.00%	4,425,597	8	6	75.00%	6,535,791	12	9	75.00%	15,750,297	30	22	75.00%	87,959,852	167	126	75.00%	110,245,940	210	157	75.00%	123,515,997	235	176	75.00%
2067	8,371,150	16	12	75.00%	4,188,762	8	6	75.00%	6,187,267	12	9	75.00%	14,907,422	28	21	75.00%	83,252,693	158	119	75.00%	104,347,382	199	149	75.00%	116,907,294	222	167	75.00%
2068	7,923,169	15	11	75.00%	3,964,601	8	6	75.00%	5,857,327	11	8	75.00%	14,109,654	27	20	75.00%	78,797,438	150	112	75.00%	98,764,419	188	141	75.00%	110,652,189	211	158	75.00%
2069	7,499,162	14	11	75.00%	3,752,436	7	5	75.00%	5,544,982	11	8	75.00%	13,354,578	25	19	75.00%	74,580,605	142	106	75.00%	93,480,165	178	133	75.00%	104,731,763	199	149	75.00%
2070	7,097,846	14	10	75.00%	3,551,625	7	5	75.00%	5,249,293	10	7	75.00%	12,639,909	24	18	75.00%	70,589,435	134	101	75.00%	88,478,637	168	126	75.00%	99,128,108	189	141	75.00%
2071	6,718,005	13	10	75.00%	3,361,560	6	5	75.00%	4,969,372	9	7	75.00%	11,963,487	23	17	75.00%	66,811,852	127	95	75.00%	83,744,710	159	119	75.00%	93,824,275	179	134	75.00%
2072	6,358,492	12	9	75.00%	3,181,667	6	5	75.00%	4,704,377	9	7	75.00%	11,323,262	22	16	75.00%	63,236,425	120	90	75.00%	79,264,065	151	113	75.00%	88,804,224	169	127	75.00%
2073	6,018,219	11	9	75.00%	3,011,400	6	4	75.00%	4,453,514	8	6	75.00%	10,717,300	20	15	75.00%	59,852,337	114	85	75.00%	75,023,151	143	107	75.00%	84,052,770	160	120	75.00%
2074	5,696,154	11	8	75.00%	2,850,246	5	4	75.00%	4,216,028	8	6	75.00%	10,143,765	19	14	75.00%	56,649,348	108	81	75.00%	71,009,141	135	101	75.00%	79,555,541	151	114	75.00%
2075	5,391,326	10	8	75.00%	2,697,715	5	4	75.00%	3,991,206	8	6	75.00%	9,600,923	18	14	75.00%	53,617,767	102	77	75.00%	67,209,895	128	96	75.00%	75,298,936	143	107	75.00%
2076	5,102,810	10	7	75.00%	2,553,347	5	4	75.00%	3,778,373	7	5	75.00%	9,087,131	17	13	75.00%	50,748,420	97	72	75.00%	63,613,923	121	91	75.00%	71,270,080	136	102	75.00%
2077	4,829,734	9	7	75.00%	2,416,705	5	3	75.00%	3,576,889	7	5	75.00%	8,600,834	16	12	75.00%	48,032,626	91	69	75.00%	60,210,349	115	86	75.00%	67,456,788	128	96	75.00%
2078	4,571,271	9	7	75.00%	2,287,376	4	3	75.00%	3,386,149	6	5	75.00%	8,140,562	15	12	75.00%	45,462,167	86	65	75.00%	56,988,878	108	81	75.00%	63,847,525	121	91	75.00%
2079	4,326,640	8	6	75.00%	2,164,967	4	3	75.00%	3,205,581	6	5	75.00%	7,704,921	15	11	75.00%	43,029,266	82	61	75.00%	53,939,768	103	77	75.00%	60,431,375	115	86	75.00%
2080	4,095,101	8	6	75.00%	2,049,109	4	3	75.00%	3,034,642	6	4	75.00%	7,292,593	14	10	75.00%	40,726,561	77	58	75.00%	51,053,796	97	73	75.00%	57,198,006	109	82	75.00%
2081	3,875,952	7	6	75.00%	1,939,451	4	3	75.00%	2,872,818	5	4	75.00%	6,902,331	13	10	75.00%	38,547,085	73	55	75.00%	48,322,234	92	69	75.00%	54,137,638	103	77	75.00%
2082	3,668,531	7	5	75.00%	1,835,662	3	3	75.00%	2,719,623	5	4	75.00%	6,532,954	12	9	75.00%	36,484,244	69	52	75.00%	45,736,821	87	65	75.00%	51,241,014	97	73	75.00%
2083	3,472,210	7	5	75.00%	1,737,427	3	2	75.00%	2,574,598	5	4	75.00%	6,183,344	12	9	75.00%	34,531,795	66	49	75.00%	43,289,737	82	62	75.00%	48,499,374	92	69	75.00%
2084	3,286,395	6	5	75.00%	1,644,449	3	2	75.00%	2,437,306	5	3	75.00%	5,852,443	11	8	75.00%	32,683,831	62	47	75.00%	40,973,580	78	58	75.00%	45,904,424	87	66	75.00%
2085	3,110,524	6	4	75.00%	1,556,446	3	2	75.00%	2,307,336	4	3	75.00%	5,539,251	11	8	75.00%	30,934,760	59	44	75.00%	38,781,347	74	55	75.00%	43,448,317	83	62	75.00%
2086	2,944,065	6	4	75.00%	1,473,153	3	2	75.00%	2,184,296	4	3	75.00%	5,242,818	10	7	75.00%	29,279,291	56	42	75.00%	36,706,405	70	52	75.00%	41,123,624	78	59	75.00%
2087	2,786,514	5	4	75.00%	1,394,318	3	2	75.00%	2,067,817	4	3	75.00%	4,962,250	9	7	75.00%	27,712,414	53	40	75.00%	34,742,481	66	50	75.00%	38,923,313	74	56	75.00%
2088	2,637,394	5	4	75.00%	1,319,701	3	2	75.00%	1,957,549	4	3	75.00%	4,696,696	9	7	75.00%	26,229,389	50	37	75.00%	32,883,634	63	47	75.00%	36,840,729	70	53	75.00%
2089	2,496,254	5	4	75.00%	1,249,077	2	2	75.00%	1,853,162	4	3	75.00%	4,445,353	8	6	75.00%	24,825,727	47	35	75.00%	31,124,242	59	44	75.00%	34,869,573	66	50	75.00%
2090	2,362,668	4	3	75.00%	1,182,233	2	2	75.00%	1,754,341	3	3	75.00%	4,207,460	8	6	75.00%	23,497,182	45	34	75.00%	29,458,983	56	42	75.00%	33,003,884	63	47	75.00%
2091	2,236,230	4	3	75.00%	1,118,966	2	2	75.00%	1,660,790	3	2	75.00%	3,982,299	8	6	75.00%	22,239,733	42	32	75.00%	27,882,822	53	40	75.00%	31,238,018	59	45	75.00%
2092	2,116,558	4	3	75.00%	1,059,085	2	2	75.00%	1,572,228	3	2	75.00%	3,769,187	7	5	75.00%	21,049,577	40	30	75.00%	26,390,991	50	38	75.00%	29,566,635	56	42	75.00%
2093	2,003,291	4	3	75.00%	1,002,408	2	1	75.00%	1,488,388	3	2	75.00%	3,567,479	7	5	75.00%	19,923,112	38	28	75.00%	24,978,979	48	36	75.00%	27,984,678	53	40	75.00%
2094	1,896,085	4	3	75.00%	948,764	2	1	75.00%	1,409,019	3	2	75.00%	3,376,566	6	5	75.00%	18,856,930	36	27	75.00%	23,642,515	45	34	75.00%	26,487,364	50	38	75.00%
2095	1,794,616	3	3	75.00%	897,991	2	1	75.00%	1,333,882	3	2	75.00%	3,195,870	6	5	75.00%	17,847,804	34	25	75.00%	22,377,556	43	32	75.00%	25,070,163	48	36	75.00%
2096	1,698,578	3	2	75.00%	849,935	2	1	75.00%	1,262,752	2	2	75.00%	3,024,843	6	4	75.00%	16,892,682	32	24	75.00%	21,180,277	40	30	75.00%	23,728,790	45	34	75.00%
2097	1,607,679	3	2	75.00%	804,451	2	1	75.00%	1,195,415	2	2	75.00%	2,862,969	5	4	75.00%	15,988,672	30	23	75.00%	20,047,056	38	29	75.00%	22,459,186	43	32	75.00%
2098	1,521,644	3	2	75.00%	761,401	1	1	75.00%	1,131,669	2	2	75.00%	2,709,758	5	4	75.00%	15,133,041	29	22	75.00%	18,974,467	36	27	75.00%	21,257,513	40	30	75.00%
2099	1,440,213	3	2	75.00%	720,655	1	1	75.00%	1,071,322	2	2	75.00%	2,564,745	5	4	75.00%	14,323,198	27	20	75.00%	17,959,266	34	26	75.00%	20,120,134	38	29	75.00%
2100	1,363,141	3	2	75.00%	682,089	1	1	75.00%	1,014,193	2	1	75.00%	2,427,493	5	3	75.00%	13,556,694	26	19	75.00%	16,998,381	32	24	75.00%	19,043,611	36	27	75.00%
2101	1,290,192	2	2	75.00%	645,587	1	1	75.00%	960,111	2	1	75.00%	2,297,586	4	3	75.00%	12,831,210	24	18	75.00%	16,088,907	31	23	75.00%	18,024,687	34	26	75.00%
2102	1,221,148	2	2	75.00%	611,039	1	1	75.00%	908,912	2	1	75.00%	2,174,631	4	3	75.00%	12,144,550	23	17	75.00%	15,228,094	29	22	75.00%	17,060,280	32	24	75.00%

RICHARDSON SMITH GARDNER & ASSOCIATES
ENGINEERING & GEOLOGICAL SERVICES

DATE: 03-Jun-10
BY: MSL
JOB NO: MPW-10-2
CHECKED BY:
PAGE NO: ____of___

Methane Power - Wayne County Landfill
MSW Tonnages - Recorded and Projected

Waste Acceptance (tons)							
Fiscal Year	96-01 (Note 1)	96-06 (Note 2)	Cal. Year (Note 3)	Unit 1	Unit 3 Ph 1 (Note 4)	Unit 3 Ph 2	Unit 3 Ph 3 (Notes 5, 6)
93-94	92,545	0	1993	46,273	0	0	0
94-95	86,820	0	1994	89,683	0	0	0
95-96	90,833	0	1995	88,827	0	0	0
96-97	103,103	0	1996	96,968	0	0	0
97-98	49,159	37,216	1997	76,131	0	0	0
98-99	0	99,601	1998	24,580	87,017	0	0
99-00	0	106,239	1999	0	102,920	0	0
00-01	0	79,809	2000	0	93,024	0	0
01-02	0	88,437	2001	0	84,123	0	0
02-03	0	88,943	2002	0	88,690	0	0
03-04	0	94,800	2003	0	0	91,872	0
04-05	0	92,938	2004	0	0	93,869	0
05-06	0	92,481	2005	0	0	92,710	0
06-07	0	81,030	2006	0	0	86,756	0
07-08	0	83,682	2007	0	0	82,356	0
08-09	0	90,000	2008	0	0	86,841	0
09-10	0	90,000	2009	0	0	90,000	0
10-11	0	90,000	2010	0	0	90,000	0
11-12	0	90,000	2011	0	0	45,000	45,000
12-13	0	90,000	2012	0	0	0	90,000
13-14	0	90,000	2013	0	0	0	90,000
14-15	0	90,000	2014	0	0	0	90,000
15-16	0	90,000	2015	0	0	0	90,000
16-17	0	90,000	2016	0	0	0	90,000
17-18	0	90,000	2017	0	0	0	90,000
18-19	0	90,000	2018	0	0	0	90,000
19-20	0	90,000	2019	0	0	0	90,000
20-21	0	90,000	2020	0	0	0	90,000
21-22	0	90,000	2021	0	0	0	90,000
22-23	0	90,000	2022	0	0	0	90,000
23-24	0	90,000	2023	0	0	0	90,000
24-25	0	90,000	2024	0	0	0	90,000
25-26	0	90,000	2025	0	0	0	90,000
26-27	0	90,000	2026	0	0	0	90,000
27-28	0	90,000	2027	0	0	0	90,000
28-29	0	90,000	2028	0	0	0	90,000
29-30	0	90,000	2029	0	0	0	90,000
30-31	0	90,000	2030	0	0	0	90,000
31-32	0	34,824	2031	0	0	0	79,824
Total	422,460	3,050,000	Total	422,460	455,774	759,403	1,834,824
						Phases 1-3 Total	3,050,000

Note 1: 96-01 (Unit 1) waste tonnages by fiscal year are taken from North Carolina Solid Waste Annual Reports.
Note 2: 96-06 (Unit 3) waste tonnages by fiscal year are taken from North Carolina Solid Waste Annual Reports. Projected tonnages are assumed to be 90,000 tons per year.
Note 3: Calendar year waste tonnages assume half of the waste from the prior and current fiscal years are placed during the current calendar year, with the exception of Unit 3 Phase 1. Since the Permit to
Construct No. 96-06 is dated October 30, 1997, it is assumed Phase 1 did not accept waste in 1997.
Note 4: Dates of waste filling for Phases 2 and 3 are estimated based on Annual MSW Landfill Capacity Reports from NC DENR.
Total capacity for Phases
Note 5: Phase 3 is assumed to begin accepting waste on July 1, 2011.
Note 6: Total capacity for phases 1, 2,and 3 is estmated based on the Permit to Construct No. 96-06, and the compaction density factor of 0.61 tcy from the FY07-08 MSW Landfill Capacity Report.

UNIT 1

Unit 1 waste From NC DAQ File review of permit docs. Input into LandGEM V.3.02

TABLE 2. CALCULATED LFG GENERATION/EMISSION RATES - UNIT 1
WAYNE COUNTY LANDFILL - DUDLEY, NC

Year	Waste Disposal Rate (tons/yr)	Waste In-Place (tons)	Waste Disposal Rate (Mg/yr)	Waste In-Place (Mg)	Methane Generation Rates (m^3/yr)	LFG Generation Rates (cfm)	LFG Collection Rates (cfm)	LFG Fugitive Rates (cfm)
1974	78,284	0	71,018	0	0.000E+00	0	0	0
1975	78,284	78,284	71,018	71,018	2.841E+05	38	29	10
1976	78,284	156,568	71,018	142,036	5.570E+05	75	56	19
1977	78,284	234,852	71,018	213,054	8.192E+05	110	83	28
1978	78,284	313,136	71,018	284,072	1.071E+06	144	108	36
1979	78,284	391,420	71,018	355,090	1.313E+06	176	132	44
1980	78,284	469,703	71,018	426,108	1.546E+06	208	156	52
1981	0	547,987	0	497,126	1.769E+06	238	178	59
1982	0	547,987	0	497,126	1.700E+06	228	171	57
1983	0	547,987	0	497,126	1.633E+06	219	165	55
1984	0	547,987	0	497,126	1.569E+06	211	158	53
1985	0	547,987	0	497,126	1.508E+06	203	152	51
1986	0	547,987	0	497,126	1.449E+06	195	146	49
1987	0	547,987	0	497,126	1.392E+06	187	140	47
1988	0	547,987	0	497,126	1.337E+06	180	135	45
1989	0	547,987	0	497,126	1.285E+06	173	129	43
1990	111,287	547,987	100,958	497,126	1.234E+06	166	124	41
1991	97,565	659,274	88,509	598,084	1.590E+06	214	160	53
1992	101,902	756,839	92,444	686,593	1.882E+06	253	190	63
1993	92,715	858,741	84,109	779,037	2.178E+06	293	219	73
1994	86,979	951,455	78,906	863,146	2.429E+06	326	245	82
1995	90,999	1,038,434	82,553	942,052	2.649E+06	356	267	89
1996	103,292	1,129,433	93,705	1,024,604	2.875E+06	386	290	97
1997	42,448	1,232,725	38,508	1,118,309	3.137E+06	422	316	105
1998	0	1,275,173	0	1,156,817	3.168E+06	426	319	106
1999	0	1,275,173	0	1,156,817	3.044E+06	409	307	102
2000	0	1,275,173	0	1,156,817	2.925E+06	393	295	98
2001	0	1,275,173	0	1,156,817	2.810E+06	378	283	94
2002	0	1,275,173	0	1,156,817	2.700E+06	363	272	91
2003	0	1,275,173	0	1,156,817	2.594E+06	349	261	87
2004	0	1,275,173	0	1,156,817	2.492E+06	335	251	84
2005	0	1,275,173	0	1,156,817	2.395E+06	322	241	80
2006	0	1,275,173	0	1,156,817	2.301E+06	309	232	77
2007	0	1,275,173	0	1,156,817	2.211E+06	297	223	74
2008	0	1,275,173	0	1,156,817	2.124E+06	285	214	71
2009	0	1,275,173	0	1,156,817	2.041E+06	274	206	69
2010	0	1,275,173	0	1,156,817	1.961E+06	263	[illegible]	66
2011	0	1,275,173	0	1,156,817	1.884E+06	253	190	63
2012	0	1,275,173	0	1,156,817	1.810E+06	243	182	61
2013	0	1,275,173	0	1,156,817	1.739E+06	234	175	58
2014	0	1,275,173	0	1,156,817	1.671E+06	225	168	56
2015	0	1,275,173	0	1,156,817	1.605E+06	216	162	54
2016	0	1,275,173	0	1,156,817	1.542E+06	207	155	52
2017	0	1,275,173	0	1,156,817	1.482E+06	199	149	50
2018	0	1,275,173	0	1,156,817	1.424E+06	191	143	48
2019	0	1,275,173	0	1,156,817	1.368E+06	184	138	46
2020	0	1,275,173	0	1,156,817	1.314E+06	177	132	44
2021	0	1,275,173	0	1,156,817	1.263E+06	170	127	42
2022	0	1,275,173	0	1,156,817	1.213E+06	163	122	41
2023	0	1,275,173	0	1,156,817	1.166E+06	157	117	39
2024	0	1,275,173	0	1,156,817	1.120E+06	150	113	38
2025	0	1,275,173	0	1,156,817	1.076E+06	145	108	36
2026	0	1,275,173	0	1,156,817	1.034E+06	139	104	35
2027	0	1,275,173	0	1,156,817	9.933E+05	133	100	33
2028	0	1,275,173	0	1,156,817	9.543E+05	128	96	32
2029	0	1,275,173	0	1,156,817	9.169E+05	123	92	31
2030	0	1,275,173	0	1,156,817	8.809E+05	118	89	30
2031	0	1,275,173	0	1,156,817	8.464E+05	114	85	28
2032	0	1,275,173	0	1,156,817	8.132E+05	109	82	27
2033	0	1,275,173	0	1,156,817	7.813E+05	105	79	26
2034	0	1,275,173	0	1,156,817	7.507E+05	101	76	25

← maximum

35. AP-42 DEFAULT NMOC CONCENTRATION IN LFG:	595 ppmv	- NMOC
36. ASSUMED METHANE CONTENT OF LFG:	~~50%~~	
AP-42 COLLECTION EFFICIENCY OF LFG SYSTEM:	75%	
37. AP-42 DECAY RATE CONSTANT:	0.04	~ K
38. AP-42 ULTIMATE METHANE RECOVERY RATE:	3,203.7 ft3/ton	
METRIC EQUIVALENT:	100 cu m/Mg	~0

Conversions:

35.314667	cu ft per cu m
1.1023113	ton per Mg
32.037	cu ft/ton per cu m/Mg

Notes:
1. Waste disposal for years 1974-1997 taken from CY2003 Emissions Inventory provided by Municipal Engineering.
2. Unit 2 was in operation during the years of 1981 - 1989.
3. Unit 3 has been in operation since 1998.

UNIT 2

TABLE 5. CALCULATED LFG GENERATION/EMISSION RATES - UNIT 2
WAYNE COUNTY LANDFILL - DUDLEY, NC

Year	Waste Disposal Rate (tons/yr)	Waste In-Place (tons)	Waste Disposal Rate (Mg/yr)	Waste In-Place (Mg)	Methane Generation Rates (m^3/yr)	LFG Generation Rates (cfm)	LFG Collection Rates (cfm)	LFG Fugitive Rates (cfm)
1974	0	0	0	0	0.000E+00	0	0	0
1975	0	0	0	0	0.000E+00	0	0	0
1976	0	0	0	0	0.000E+00	0	0	0
1977	0	0	0	0	0.000E+00	0	0	0
1978	0	0	0	0	0.000E+00	0	0	0
1979	0	0	0	0	0.000E+00	0	0	0
1980	0	0	0	0	0.000E+00	0	0	0
1981	78,284	0	71,018	0	0.000E+00	0	0	0
1982	78,284	78,284	71,018	71,018	2.841E+05	38	29	10
1983	78,284	156,568	71,018	142,036	5.570E+05	75	56	19
1984	78,284	234,852	71,018	213,054	8.192E+05	110	83	28
1985	78,284	313,136	71,018	284,072	1.071E+06	144	108	36
1986	78,284	391,420	71,018	355,090	1.313E+06	176	132	44
1987	78,284	469,703	71,018	426,108	1.546E+06	208	156	52
1988	78,284	547,987	71,018	497,126	1.769E+06	238	178	59
1989	78,284	626,271	71,018	568,144	1.984E+06	267	200	67
1990	0	704,555	0	639,162	2.190E+06	294	221	74
1991	0	704,555	0	639,162	2.104E+06	283	212	71
1992	0	704,555	0	639,162	2.022E+06	272	204	68
1993	0	704,555	0	639,162	1.943E+06	261	196	65
1994	0	704,555	0	639,162	1.866E+06	251	188	63
1995	0	704,555	0	639,162	1.793E+06	241	181	60
1996	0	704,555	0	639,162	1.723E+06	232	174	58
1997	0	704,555	0	639,162	1.655E+06	222	167	56
1998	0	704,555	0	639,162	1.590E+06	214	160	53
1999	0	704,555	0	639,162	1.528E+06	205	154	51
2000	0	704,555	0	639,162	1.468E+06	197	148	49
2001	0	704,555	0	639,162	1.411E+06	190	142	47
2002	0	704,555	0	639,162	1.355E+06	182	137	46
2003	0	704,555	0	639,162	1.302E+06	175	131	44
2004	0	704,555	0	639,162	1.251E+06	168	126	42
2005	0	704,555	0	639,162	1.202E+06	162	121	40
2006	0	704,555	0	639,162	1.155E+06	155	116	39
2007	0	704,555	0	639,162	1.110E+06	149	112	37
2008	0	704,555	0	639,162	1.066E+06	143	107	36
2009	0	704,555	0	639,162	1.024E+06	138	103	34
2010	0	704,555	0	639,162	9.842E+05	132	98	33
2011	0	704,555	0	639,162	9.456E+05	127	95	32
2012	0	704,555	0	639,162	9.085E+05	122	92	31
2013	0	704,555	0	639,162	8.729E+05	117	88	29
2014	0	704,555	0	639,162	8.386E+05	113	85	28
2015	0	704,555	0	639,162	8.058E+05	108	81	27
2016	0	704,555	0	639,162	7.742E+05	104	78	26
2017	0	704,555	0	639,162	7.438E+05	100	75	25
2018	0	704,555	0	639,162	7.146E+05	96	72	24
2019	0	704,555	0	639,162	6.866E+05	92	69	23
2020	0	704,555	0	639,162	6.597E+05	89	66	22
2021	0	704,555	0	639,162	6.338E+05	85	64	21
2022	0	704,555	0	639,162	6.090E+05	82	61	20
2023	0	704,555	0	639,162	5.851E+05	79	59	20
2024	0	704,555	0	639,162	5.622E+05	76	57	19
2025	0	704,555	0	639,162	5.401E+05	73	54	18
2026	0	704,555	0	639,162	5.189E+05	70	52	17
2027	0	704,555	0	639,162	4.986E+05	67	50	17
2028	0	704,555	0	639,162	4.790E+05	64	48	16
2029	0	704,555	0	639,162	4.603E+05	62	46	15
2030	0	704,555	0	639,162	4.422E+05	59	45	15
2031	0	704,555	0	639,162	4.249E+05	57	43	14
2032	0	704,555	0	639,162	4.082E+05	55	41	14
2033	0	704,555	0	639,162	3.922E+05	53	40	13
2034	0	704,555	0	639,162	3.768E+05	51	38	13

Unit 2 Waste from NC DAQ File review of permit docs Input into LandGEM V.3.02

← maximum

AP-42 DEFAULT NMOC CONCENTRATION IN LFG:	595	ppmv
ASSUMED METHANE CONTENT OF LFG:	50%	
AP-42 COLLECTION EFFICIENCY OF LFG SYSTEM:	75%	
AP-42 DECAY RATE CONSTANT:	0.04	
AP-42 ULTIMATE METHANE RECOVERY RATE:	3,203.7	ft3/ton
METRIC EQUIVALENT:	100	cu m/Mg

Conversions:	**35.314667**	**cu ft per cu m**
	1.1023113	**ton per Mg**
	32.037	**cu ft/ton per cu m/Mg**

Notes:
1. Waste disposal for years 1974-1997 taken from CY2003 Emissions Inventory provided by Municipal Engineering.
2. Waste disposal in years 1974-1980 and years 1990-1997 in Unit 1.
3. Waste disposal in years 1998-present in Unit 3.

RECD AIR DEPARTMENT OCT 10 05

UNIT 3

Unit 3 Waste projections are significantly higher than those used in LandGEM modeling.

TABLE 8. CALCULATED LFG GENERATION/EMISSION RATES - UNIT 3
WAYNE COUNTY LANDFILL - DUDLEY, NC

Year	Waste Disposal Rate (tons/yr)	Waste In-Place (tons)	Waste Disposal Rate (Mg/yr)	Waste In-Place (Mg)	Methane Generation Rates (m^3/yr)	LFG Generation Rates (cfm)	LFG Collection Rates (cfm)	LFG Fugitive Rates (cfm)
1998	82,624	0	74,955	0	0.000E+00	0	0	0
1999	111,693	82,624	101,326	74,955	2.998E+05	40	30	10
2000	88,247	194,317	80,056	176,281	6.934E+05	93	70	23
2001	86,017	282,564	78,033	256,337	9.864E+05	133	99	33
2002	105,931	368,580	96,099	334,370	1.260E+06	169	127	42
2003	104,807	474,511	95,079	430,469	1.595E+06	214	161	54
2004	92,601	579,318	84,006	525,549	1.913E+06	257	193	64
2005	93,527	671,919	84,846	609,555	2.174E+06	292	219	73
2006	94,462	765,446	85,695	694,401	2.428E+06	326	245	82
2007	95,407	859,909	86,552	780,096	2.675E+06	360	270	90
2008	96,361	955,315	87,417	866,648	2.917E+06	392	294	98
2009	97,325	1,051,676	88,291	954,065	3.152E+06	424	318	106
2010	98,298	1,149,001	89,174	1,042,356	3.382E+06	454	341	114
2011	99,281	1,247,299	90,066	1,131,531	3.606E+06	485	363	121
2012	100,274	1,346,580	90,967	1,221,597	3.825E+06	514	385	128
2013	101,276	1,446,853	91,876	1,312,563	4.038E+06	543	407	136
2014	102,289	1,548,130	92,795	1,404,440	4.248E+06	571	428	143
2015	103,312	1,650,419	93,723	1,497,235	4.452E+06	598	449	150
2016	104,345	1,753,731	94,660	1,590,958	4.653E+06	625	469	156
2017	105,389	1,858,076	95,607	1,685,618	4.849E+06	652	489	163
2018	106,442	1,963,464	96,563	1,781,225	5.041E+06	677	508	169
2019	107,507	2,069,907	97,529	1,877,788	5.230E+06	703	527	176
2020	108,582	2,177,414	98,504	1,975,317	5.415E+06	728	546	182
2021	109,668	2,285,996	99,489	2,073,820	5.596E+06	752	564	188
2022	110,764	2,395,664	100,484	2,173,309	5.775E+06	776	582	194
2023	111,872	2,506,428	101,489	2,273,793	5.950E+06	800	600	200
2024	112,991	2,618,300	102,504	2,375,282	6.123E+06	823	617	206
2025	114,121	2,731,291	103,529	2,477,785	6.293E+06	846	634	211
2026	115,262	2,845,412	104,564	2,581,314	6.460E+06	868	651	217
2027	116,415	2,960,674	105,610	2,685,878	6.625E+06	890	668	223
2028	117,579	3,077,088	106,666	2,791,487	6.788E+06	912	684	228
2029	118,754	3,194,667	107,732	2,898,153	6.948E+06	934	700	233
2030	119,942	3,313,421	108,810	3,005,885	7.107E+06	955	716	239
2031	121,141	3,433,363	109,898	3,114,695	7.264E+06	976	732	244
2032	122,353	3,554,505	110,997	3,224,593	7.418E+06	997	748	249
2033	123,576	3,676,858	112,107	3,335,589	7.571E+06	1,017	763	254
2034	124,812	3,800,434	113,228	3,447,696	7.723E+06	1,038	778	259
2035	126,060	3,925,246	114,360	3,560,923	7.873E+06	1,058	793	264
2036	127,321	4,051,306	115,504	3,675,283	8.022E+06	1,078	808	269
2037	128,594	4,178,627	116,659	3,790,787	8.169E+06	1,098	823	274
2038	**0**	**4,307,221**	**0**	**3,907,446**	**8.316E+06**	**1,117**	**838**	**279** ← maximum
2039	0	4,307,221	0	3,907,446	7.990E+06	1,074	805	268
2040	0	4,307,221	0	3,907,446	7.676E+06	1,032	774	258
2041	0	4,307,221	0	3,907,446	7.375E+06	991	743	248
2042	0	4,307,221	0	3,907,446	7.086E+06	952	714	238
2043	0	4,307,221	0	3,907,446	6.808E+06	915	686	229
2044	0	4,307,221	0	3,907,446	6.541E+06	879	659	220
2045	0	4,307,221	0	3,907,446	6.285E+06	845	633	211
2046	0	4,307,221	0	3,907,446	6.038E+06	811	609	203
2047	0	4,307,221	0	3,907,446	5.802E+06	780	585	195
2048	0	4,307,221	0	3,907,446	5.574E+06	749	562	187
2049	0	4,307,221	0	3,907,446	5.356E+06	720	540	180
2050	0	4,307,221	0	3,907,446	5.146E+06	691	519	173
2051	0	4,307,221	0	3,907,446	4.944E+06	664	498	166
2052	0	4,307,221	0	3,907,446	4.750E+06	638	479	160
2053	0	4,307,221	0	3,907,446	4.564E+06	613	460	153
2054	0	4,307,221	0	3,907,446	4.385E+06	589	442	147
2055	0	4,307,221	0	3,907,446	4.213E+06	566	425	142
2056	0	4,307,221	0	3,907,446	4.048E+06	544	408	136
2057	0	4,307,221	0	3,907,446	3.889E+06	523	392	131
2058	0	4,307,221	0	3,907,446	3.736E+06	502	377	126

Waste density = 0.86 tcy at permitted volume of 5 million cy

AP-42 DEFAULT NMOC CONCENTRATION IN LFG:	595	ppmv
ASSUMED METHANE CONTENT OF LFG:	50%	
AP-42 COLLECTION EFFICIENCY OF LFG SYSTEM:	75%	
AP-42 DECAY RATE CONSTANT:	0.04	
AP-42 ULTIMATE METHANE RECOVERY RATE:	3,203.7	ft3/ton
METRIC EQUIVALENT:	100	cu m/Mg

Conversions:	**35.314667**	**cu ft per cu m**
	1.1023113	**ton per Mg**
	32.037	**cu ft/ton per cu m/Mg**

Notes:
1. Waste disposal for years 1974-1997 placed in Units 1 and 2.
2. Waste disposal amounts for years 1998 - 2004 provided by Municipal Engineering.
3. Waste disposal for years 2005-2037 assumed to have 1 percent annual waste increase per year.

Summary Report

Landfill Name or Identifier: MPW-Wayne Co. Unit 1

Date: Monday, June 14, 2010

Description/Comments:

About LandGEM:

First-Order Decomposition Rate Equation:

$$Q_{CH_4} = \sum_{i=1}^{n} \sum_{j=0.1}^{1} k L_o \left(\frac{M_i}{10} \right) e^{-k t_{ij}}$$

Where,

Q_{CH4} = annual methane generation in the year of the calculation (*m^3/year*)
i = 1-year time increment
n = (year of the calculation) - (initial year of waste acceptance)
j = 0.1-year time increment
k = methane generation rate (*$year^{-1}$*)
L_o = potential methane generation capacity (*m^3/Mg*)

M_i = mass of waste accepted in the ith year (*Mg*)
t_{ij} = age of the jth section of waste mass M_i accepted in the ith year (*decimal years*, e.g., 3.2 years)

LandGEM is based on a first-order decomposition rate equation for quantifying emissions from the decomposition of landfilled waste in municipal solid waste (MSW) landfills. The software provides a relatively simple approach to estimating landfill gas emissions. Model defaults are based on empirical data from U.S. landfills. Field test data can also be used in place of model defaults when available. Further guidance on EPA test methods, Clean Air Act (CAA) regulations, and other guidance regarding landfill gas emissions and control technology requirements can be found at http://www.epa.gov/ttnatw01/landfill/landflpg.html.

LandGEM is considered a screening tool — the better the input data, the better the estimates. Often, there are limitations with the available data regarding waste quantity and composition, variation in design and operating practices over time, and changes occurring over time that impact the emissions potential. Changes to landfill operation, such as operating under wet conditions through leachate recirculation or other liquid additions, will result in generating more gas at a faster rate. Defaults for estimating emissions for this type of operation are being developed to include in LandGEM along with defaults for convential landfills (no leachate or liquid additions) for developing emission inventories and determining CAA applicability. Refer to the Web site identified above for future updates.

Input Review

LANDFILL CHARACTERISTICS

Landfill Open Year	**1974**	
Landfill Closure Year (with 80-year limit)	**1997**	
Actual Closure Year (without limit)	***1997***	
Have Model Calculate Closure Year?	**No**	
Waste Design Capacity	**1,275,175**	*short tons*

MODEL PARAMETERS

Methane Generation Rate, k	**0.055**	*year^{-1}*
Potential Methane Generation Capacity, L_o	**147**	*m^3/Mg*
NMOC Concentration	**140**	*ppmv as hexane*
Methane Content	**50**	*% by volume*

GASES / POLLUTANTS SELECTED

Gas / Pollutant #1:	**Total landfill gas**
Gas / Pollutant #2:	**Methane**
Gas / Pollutant #3:	**Carbon dioxide**
Gas / Pollutant #4:	**NMOC**

WASTE ACCEPTANCE RATES

Year	Waste Accepted		Waste-In-Place	
	(Mg/year)	*(short tons/year)*	*(Mg)*	*(short tons)*
1974	71,167	78,284	0	0
1975	71,167	78,284	71,167	78,284
1976	71,167	78,284	142,335	156,568
1977	71,167	78,284	213,502	234,852
1978	71,167	78,284	284,669	313,136
1979	71,167	78,284	355,836	391,420
1980	71,167	78,284	427,004	469,704
1981	0	0	498,171	547,988
1982	0	0	498,171	547,988
1983	0	0	498,171	547,988
1984	0	0	498,171	547,988
1985	0	0	498,171	547,988
1986	0	0	498,171	547,988
1987	0	0	498,171	547,988
1988	0	0	498,171	547,988
1989	0	0	498,171	547,988
1990	101,170	111,287	498,171	547,988
1991	88,695	97,565	599,341	659,275
1992	92,638	101,902	688,036	756,840
1993	84,286	92,715	780,675	858,742
1994	79,072	86,979	864,961	951,457
1995	82,726	90,999	944,033	1,038,436
1996	93,902	103,292	1,026,759	1,129,435
1997	38,589	42,448	1,120,661	1,232,727
1998	0	0	1,159,250	1,275,175
1999	0	0	1,159,250	1,275,175
2000	0	0	1,159,250	1,275,175
2001	0	0	1,159,250	1,275,175
2002	0	0	1,159,250	1,275,175
2003	0	0	1,159,250	1,275,175
2004	0	0	1,159,250	1,275,175
2005	0	0	1,159,250	1,275,175
2006	0	0	1,159,250	1,275,175
2007	0	0	1,159,250	1,275,175
2008	0	0	1,159,250	1,275,175
2009	0	0	1,159,250	1,275,175
2010	0	0	1,159,250	1,275,175
2011	0	0	1,159,250	1,275,175
2012	0	0	1,159,250	1,275,175
2013	0	0	1,159,250	1,275,175

Pollutant Parameters

		Gas / Pollutant Default Parameters:		User-specified Pollutant Parameters:	
	Compound	Concentration (*ppmv*)	Molecular Weight	Concentration (*ppmv*)	Molecular Weight
Gases	Total landfill gas		0.00		
	Methane		16.04		
	Carbon dioxide		44.01		
	NMOC	4,000	86.18		
Pollutants	1,1,1-Trichloroethane (methyl chloroform) - HAP	0.48	133.41		
	1,1,2,2-Tetrachloroethane - HAP/VOC	1.1	167.85		
	1,1-Dichloroethane (ethylidene dichloride) - HAP/VOC	2.4	98.97		
	1,1-Dichloroethene (vinylidene chloride) - HAP/VOC	0.20	96.94		
	1,2-Dichloroethane (ethylene dichloride) - HAP/VOC	0.41	98.96		
	1,2-Dichloropropane (propylene dichloride) - HAP/VOC	0.18	112.99		
	2-Propanol (isopropyl alcohol) - VOC	50	60.11		
	Acetone	7.0	58.08		
	Acrylonitrile - HAP/VOC	6.3	53.06		
	Benzene - No or Unknown Co-disposal - HAP/VOC	1.9	78.11		
	Benzene - Co-disposal - HAP/VOC	11	78.11		
	Bromodichloromethane - VOC	3.1	163.83		
	Butane - VOC	5.0	58.12		
	Carbon disulfide - HAP/VOC	0.58	76.13		
	Carbon monoxide	140	28.01		
	Carbon tetrachloride - HAP/VOC	4.0E-03	153.84		
	Carbonyl sulfide - HAP/VOC	0.49	60.07		
	Chlorobenzene - HAP/VOC	0.25	112.56		
	Chlorodifluoromethane	1.3	86.47		
	Chloroethane (ethyl chloride) - HAP/VOC	1.3	64.52		
	Chloroform - HAP/VOC	0.03	119.39		
	Chloromethane - VOC	1.2	50.49		
	Dichlorobenzene - (HAP for para isomer/VOC)	0.21	147		
	Dichlorodifluoromethane	16	120.91		
	Dichlorofluoromethane - VOC	2.6	102.92		
	Dichloromethane (methylene chloride) - HAP	14	84.94		
	Dimethyl sulfide (methyl sulfide) - VOC	7.8	62.13		
	Ethane	890	30.07		
	Ethanol - VOC	27	46.08		

Pollutant Parameters (Continued)

	Compound	Gas / Pollutant Default Parameters: Concentration (*ppmv*)	Molecular Weight	User-specified Pollutant Parameters: Concentration (*ppmv*)	Molecular Weight
Pollutants	Ethyl mercaptan (ethanethiol) - VOC	2.3	62.13		
	Ethylbenzene - HAP/VOC	4.6	106.16		
	Ethylene dibromide - HAP/VOC	1.0E-03	187.88		
	Fluorotrichloromethane - VOC	0.76	137.38		
	Hexane - HAP/VOC	6.6	86.18		
	Hydrogen sulfide	36	34.08		
	Mercury (total) - HAP	2.9E-04	200.61		
	Methyl ethyl ketone - HAP/VOC	7.1	72.11		
	Methyl isobutyl ketone - HAP/VOC	1.9	100.16		
	Methyl mercaptan - VOC	2.5	48.11		
	Pentane - VOC	3.3	72.15		
	Perchloroethylene (tetrachloroethylene) - HAP	3.7	165.83		
	Propane - VOC	11	44.09		
	t-1,2-Dichloroethene - VOC	2.8	96.94		
	Toluene - No or Unknown Co-disposal - HAP/VOC	39	92.13		
	Toluene - Co-disposal - HAP/VOC	170	92.13		
	Trichloroethylene (trichloroethene) - HAP/VOC	2.8	131.40		
	Vinyl chloride - HAP/VOC	7.3	62.50		
	Xylenes - HAP/VOC	12	106.16		

Results

Year	Total landfill gas			Methane		
	(Mg/year)	*(m^3/year)*	*(av ft^3/min)*	*(Mg/year)*	*(m^3/year)*	*(av ft^3/min)*
1974	0	0	0	0	0	0
1975	1.402E+03	1.123E+06	7.544E+01	3.745E+02	5.614E+05	3.772E+01
1976	2.729E+03	2.185E+06	1.468E+02	7.290E+02	1.093E+06	7.342E+01
1977	3.985E+03	3.191E+06	2.144E+02	1.065E+03	1.596E+06	1.072E+02
1978	5.174E+03	4.143E+06	2.784E+02	1.382E+03	2.072E+06	1.392E+02
1979	6.300E+03	5.044E+06	3.389E+02	1.683E+03	2.522E+06	1.695E+02
1980	7.365E+03	5.897E+06	3.962E+02	1.967E+03	2.949E+06	1.981E+02
1981	8.373E+03	6.704E+06	4.505E+02	2.236E+03	3.352E+06	2.252E+02
1982	7.925E+03	6.346E+06	4.264E+02	2.117E+03	3.173E+06	2.132E+02
1983	7.500E+03	6.006E+06	4.035E+02	2.003E+03	3.003E+06	2.018E+02
1984	7.099E+03	5.685E+06	3.819E+02	1.896E+03	2.842E+06	1.910E+02
1985	6.719E+03	5.380E+06	3.615E+02	1.795E+03	2.690E+06	1.808E+02
1986	6.360E+03	5.092E+06	3.422E+02	1.699E+03	2.546E+06	1.711E+02
1987	6.019E+03	4.820E+06	3.239E+02	1.608E+03	2.410E+06	1.619E+02
1988	5.697E+03	4.562E+06	3.065E+02	1.522E+03	2.281E+06	1.533E+02
1989	5.392E+03	4.318E+06	2.901E+02	1.440E+03	2.159E+06	1.451E+02
1990	5.104E+03	4.087E+06	2.746E+02	1.363E+03	2.043E+06	1.373E+02
1991	6.824E+03	5.464E+06	3.671E+02	1.823E+03	2.732E+06	1.836E+02
1992	8.206E+03	6.571E+06	4.415E+02	2.192E+03	3.286E+06	2.208E+02
1993	9.592E+03	7.681E+06	5.161E+02	2.562E+03	3.840E+06	2.580E+02
1994	1.074E+04	8.600E+06	5.778E+02	2.869E+03	4.300E+06	2.889E+02
1995	1.172E+04	9.387E+06	6.307E+02	3.131E+03	4.693E+06	3.154E+02
1996	1.273E+04	1.019E+07	6.847E+02	3.399E+03	5.095E+06	3.423E+02
1997	1.389E+04	1.113E+07	7.476E+02	3.711E+03	5.563E+06	3.738E+02
1998	1.391E+04	1.114E+07	7.485E+02	3.716E+03	5.570E+06	3.742E+02
1999	1.317E+04	1.054E+07	7.084E+02	3.517E+03	5.272E+06	3.542E+02
2000	1.246E+04	9.979E+06	6.705E+02	3.329E+03	4.990E+06	3.352E+02
2001	1.180E+04	9.445E+06	6.346E+02	3.151E+03	4.722E+06	3.173E+02
2002	1.116E+04	8.940E+06	6.006E+02	2.982E+03	4.470E+06	3.003E+02
2003	1.057E+04	8.461E+06	5.685E+02	2.822E+03	4.231E+06	2.843E+02
2004	1.000E+04	8.008E+06	5.381E+02	2.671E+03	4.004E+06	2.690E+02
2005	9.466E+03	7.580E+06	5.093E+02	2.528E+03	3.790E+06	2.546E+02
2006	8.959E+03	7.174E+06	4.820E+02	2.393E+03	3.587E+06	2.410E+02
2007	8.480E+03	6.790E+06	4.562E+02	2.265E+03	3.395E+06	2.281E+02
2008	8.026E+03	6.427E+06	4.318E+02	2.144E+03	3.213E+06	2.159E+02
2009	7.596E+03	6.083E+06	4.087E+02	2.029E+03	3.041E+06	2.044E+02
2010	7.190E+03	5.757E+06	3.868E+02	1.921E+03	2.879E+06	1.934E+02
2011	6.805E+03	5.449E+06	3.661E+02	1.818E+03	2.725E+06	1.831E+02
2012	6.441E+03	5.158E+06	3.465E+02	1.720E+03	2.579E+06	1.733E+02
2013	6.096E+03	4.882E+06	3.280E+02	1.628E+03	2.441E+06	1.640E+02
2014	5.770E+03	4.620E+06	3.104E+02	1.541E+03	2.310E+06	1.552E+02
2015	5.461E+03	4.373E+06	2.938E+02	1.459E+03	2.187E+06	1.469E+02
2016	5.169E+03	4.139E+06	2.781E+02	1.381E+03	2.070E+06	1.391E+02
2017	4.892E+03	3.918E+06	2.632E+02	1.307E+03	1.959E+06	1.316E+02
2018	4.631E+03	3.708E+06	2.491E+02	1.237E+03	1.854E+06	1.246E+02
2019	4.383E+03	3.510E+06	2.358E+02	1.171E+03	1.755E+06	1.179E+02
2020	4.148E+03	3.322E+06	2.232E+02	1.108E+03	1.661E+06	1.116E+02
2021	3.926E+03	3.144E+06	2.112E+02	1.049E+03	1.572E+06	1.056E+02
2022	3.716E+03	2.976E+06	1.999E+02	9.926E+02	1.488E+06	9.997E+01
2023	3.517E+03	2.816E+06	1.892E+02	9.395E+02	1.408E+06	9.462E+01

Results (Continued)

Year	Total landfill gas			Methane		
	(Mg/year)	*(m^3/year)*	*(av ft^3/min)*	*(Mg/year)*	*(m^3/year)*	*(av ft^3/min)*
2024	3.329E+03	2.666E+06	1.791E+02	8.892E+02	1.333E+06	8.956E+01
2025	3.151E+03	2.523E+06	1.695E+02	8.416E+02	1.262E+06	8.476E+01
2026	2.982E+03	2.388E+06	1.605E+02	7.966E+02	1.194E+06	8.023E+01
2027	2.823E+03	2.260E+06	1.519E+02	7.540E+02	1.130E+06	7.593E+01
2028	2.672E+03	2.139E+06	1.437E+02	7.136E+02	1.070E+06	7.187E+01
2029	2.529E+03	2.025E+06	1.360E+02	6.754E+02	1.012E+06	6.802E+01
2030	2.393E+03	1.916E+06	1.288E+02	6.393E+02	9.582E+05	6.438E+01
2031	2.265E+03	1.814E+06	1.219E+02	6.051E+02	9.070E+05	6.094E+01
2032	2.144E+03	1.717E+06	1.154E+02	5.727E+02	8.584E+05	5.768E+01
2033	2.029E+03	1.625E+06	1.092E+02	5.420E+02	8.125E+05	5.459E+01
2034	1.921E+03	1.538E+06	1.033E+02	5.130E+02	7.690E+05	5.167E+01
2035	1.818E+03	1.456E+06	9.781E+01	4.856E+02	7.278E+05	4.890E+01
2036	1.721E+03	1.378E+06	9.257E+01	4.596E+02	6.889E+05	4.629E+01
2037	1.629E+03	1.304E+06	8.762E+01	4.350E+02	6.520E+05	4.381E+01
2038	1.541E+03	1.234E+06	8.293E+01	4.117E+02	6.171E+05	4.147E+01
2039	1.459E+03	1.168E+06	7.849E+01	3.897E+02	5.841E+05	3.925E+01
2040	1.381E+03	1.106E+06	7.429E+01	3.688E+02	5.529E+05	3.715E+01
2041	1.307E+03	1.047E+06	7.032E+01	3.491E+02	5.233E+05	3.516E+01
2042	1.237E+03	9.905E+05	6.655E+01	3.304E+02	4.953E+05	3.328E+01
2043	1.171E+03	9.375E+05	6.299E+01	3.127E+02	4.688E+05	3.150E+01
2044	1.108E+03	8.873E+05	5.962E+01	2.960E+02	4.437E+05	2.981E+01
2045	1.049E+03	8.399E+05	5.643E+01	2.802E+02	4.199E+05	2.822E+01
2046	9.927E+02	7.949E+05	5.341E+01	2.652E+02	3.975E+05	2.671E+01
2047	9.396E+02	7.524E+05	5.055E+01	2.510E+02	3.762E+05	2.528E+01
2048	8.893E+02	7.121E+05	4.785E+01	2.375E+02	3.561E+05	2.392E+01
2049	8.417E+02	6.740E+05	4.529E+01	2.248E+02	3.370E+05	2.264E+01
2050	7.967E+02	6.379E+05	4.286E+01	2.128E+02	3.190E+05	2.143E+01
2051	7.540E+02	6.038E+05	4.057E+01	2.014E+02	3.019E+05	2.028E+01
2052	7.137E+02	5.715E+05	3.840E+01	1.906E+02	2.857E+05	1.920E+01
2053	6.755E+02	5.409E+05	3.634E+01	1.804E+02	2.705E+05	1.817E+01
2054	6.393E+02	5.120E+05	3.440E+01	1.708E+02	2.560E+05	1.720E+01
2055	6.051E+02	4.846E+05	3.256E+01	1.616E+02	2.423E+05	1.628E+01
2056	5.727E+02	4.586E+05	3.082E+01	1.530E+02	2.293E+05	1.541E+01
2057	5.421E+02	4.341E+05	2.917E+01	1.448E+02	2.170E+05	1.458E+01
2058	5.131E+02	4.109E+05	2.761E+01	1.371E+02	2.054E+05	1.380E+01
2059	4.856E+02	3.889E+05	2.613E+01	1.297E+02	1.944E+05	1.306E+01
2060	4.596E+02	3.681E+05	2.473E+01	1.228E+02	1.840E+05	1.236E+01
2061	4.350E+02	3.484E+05	2.341E+01	1.162E+02	1.742E+05	1.170E+01
2062	4.118E+02	3.297E+05	2.215E+01	1.100E+02	1.649E+05	1.108E+01
2063	3.897E+02	3.121E+05	2.097E+01	1.041E+02	1.560E+05	1.048E+01
2064	3.689E+02	2.954E+05	1.985E+01	9.853E+01	1.477E+05	9.923E+00
2065	3.491E+02	2.796E+05	1.878E+01	9.326E+01	1.398E+05	9.392E+00
2066	3.304E+02	2.646E+05	1.778E+01	8.827E+01	1.323E+05	8.889E+00
2067	3.128E+02	2.504E+05	1.683E+01	8.354E+01	1.252E+05	8.414E+00
2068	2.960E+02	2.370E+05	1.593E+01	7.907E+01	1.185E+05	7.963E+00
2069	2.802E+02	2.244E+05	1.507E+01	7.484E+01	1.122E+05	7.537E+00
2070	2.652E+02	2.124E+05	1.427E+01	7.083E+01	1.062E+05	7.134E+00
2071	2.510E+02	2.010E+05	1.350E+01	6.704E+01	1.005E+05	6.752E+00
2072	2.376E+02	1.902E+05	1.278E+01	6.346E+01	9.512E+04	6.391E+00
2073	2.249E+02	1.801E+05	1.210E+01	6.006E+01	9.003E+04	6.049E+00
2074	2.128E+02	1.704E+05	1.145E+01	5.685E+01	8.521E+04	5.725E+00

Results (Continued)

Year	Carbon dioxide			NMOC		
	(Mg/year)	*(m^3/year)*	*(av ft^3/min)*	*(Mg/year)*	*(m^3/year)*	*(av ft^3/min)*
1974	0	0	0	0	0	0
1975	1.028E+03	5.614E+05	3.772E+01	5.634E-01	1.572E+02	1.056E-02
1976	2.000E+03	1.093E+06	7.342E+01	1.097E+00	3.060E+02	2.056E-02
1977	2.921E+03	1.596E+06	1.072E+02	1.601E+00	4.468E+02	3.002E-02
1978	3.792E+03	2.072E+06	1.392E+02	2.079E+00	5.801E+02	3.897E-02
1979	4.617E+03	2.522E+06	1.695E+02	2.531E+00	7.062E+02	4.745E-02
1980	5.397E+03	2.949E+06	1.981E+02	2.959E+00	8.256E+02	5.547E-02
1981	6.136E+03	3.352E+06	2.252E+02	3.364E+00	9.386E+02	6.307E-02
1982	5.808E+03	3.173E+06	2.132E+02	3.184E+00	8.884E+02	5.969E-02
1983	5.497E+03	3.003E+06	2.018E+02	3.014E+00	8.408E+02	5.650E-02
1984	5.203E+03	2.842E+06	1.910E+02	2.853E+00	7.958E+02	5.347E-02
1985	4.924E+03	2.690E+06	1.808E+02	2.700E+00	7.533E+02	5.061E-02
1986	4.661E+03	2.546E+06	1.711E+02	2.556E+00	7.129E+02	4.790E-02
1987	4.411E+03	2.410E+06	1.619E+02	2.419E+00	6.748E+02	4.534E-02
1988	4.175E+03	2.281E+06	1.533E+02	2.289E+00	6.387E+02	4.291E-02
1989	3.952E+03	2.159E+06	1.451E+02	2.167E+00	6.045E+02	4.062E-02
1990	3.740E+03	2.043E+06	1.373E+02	2.051E+00	5.722E+02	3.844E-02
1991	5.001E+03	2.732E+06	1.836E+02	2.742E+00	7.650E+02	5.140E-02
1992	6.014E+03	3.286E+06	2.208E+02	3.298E+00	9.200E+02	6.181E-02
1993	7.030E+03	3.840E+06	2.580E+02	3.855E+00	1.075E+03	7.225E-02
1994	7.871E+03	4.300E+06	2.889E+02	4.316E+00	1.204E+03	8.089E-02
1995	8.591E+03	4.693E+06	3.154E+02	4.711E+00	1.314E+03	8.830E-02
1996	9.326E+03	5.095E+06	3.423E+02	5.113E+00	1.427E+03	9.585E-02
1997	1.018E+04	5.563E+06	3.738E+02	5.583E+00	1.558E+03	1.047E-01
1998	1.020E+04	5.570E+06	3.742E+02	5.590E+00	1.560E+03	1.048E-01
1999	9.650E+03	5.272E+06	3.542E+02	5.291E+00	1.476E+03	9.918E-02
2000	9.133E+03	4.990E+06	3.352E+02	5.008E+00	1.397E+03	9.387E-02
2001	8.645E+03	4.722E+06	3.173E+02	4.740E+00	1.322E+03	8.884E-02
2002	8.182E+03	4.470E+06	3.003E+02	4.486E+00	1.252E+03	8.409E-02
2003	7.744E+03	4.231E+06	2.843E+02	4.246E+00	1.185E+03	7.959E-02
2004	7.330E+03	4.004E+06	2.690E+02	4.019E+00	1.121E+03	7.533E-02
2005	6.937E+03	3.790E+06	2.546E+02	3.804E+00	1.061E+03	7.130E-02
2006	6.566E+03	3.587E+06	2.410E+02	3.600E+00	1.004E+03	6.748E-02
2007	6.215E+03	3.395E+06	2.281E+02	3.408E+00	9.506E+02	6.387E-02
2008	5.882E+03	3.213E+06	2.159E+02	3.225E+00	8.998E+02	6.045E-02
2009	5.567E+03	3.041E+06	2.044E+02	3.053E+00	8.516E+02	5.722E-02
2010	5.269E+03	2.879E+06	1.934E+02	2.889E+00	8.060E+02	5.416E-02
2011	4.987E+03	2.725E+06	1.831E+02	2.735E+00	7.629E+02	5.126E-02
2012	4.721E+03	2.579E+06	1.733E+02	2.588E+00	7.221E+02	4.852E-02
2013	4.468E+03	2.441E+06	1.640E+02	2.450E+00	6.834E+02	4.592E-02
2014	4.229E+03	2.310E+06	1.552E+02	2.319E+00	6.469E+02	4.346E-02
2015	4.003E+03	2.187E+06	1.469E+02	2.195E+00	6.122E+02	4.114E-02
2016	3.788E+03	2.070E+06	1.391E+02	2.077E+00	5.795E+02	3.893E-02
2017	3.586E+03	1.959E+06	1.316E+02	1.966E+00	5.485E+02	3.685E-02
2018	3.394E+03	1.854E+06	1.246E+02	1.861E+00	5.191E+02	3.488E-02
2019	3.212E+03	1.755E+06	1.179E+02	1.761E+00	4.913E+02	3.301E-02
2020	3.040E+03	1.661E+06	1.116E+02	1.667E+00	4.650E+02	3.125E-02
2021	2.878E+03	1.572E+06	1.056E+02	1.578E+00	4.402E+02	2.957E-02
2022	2.724E+03	1.488E+06	9.997E+01	1.493E+00	4.166E+02	2.799E-02
2023	2.578E+03	1.408E+06	9.462E+01	1.413E+00	3.943E+02	2.649E-02

Results (Continued)

Year	Carbon dioxide			NMOC		
	(Mg/year)	*(m^3/year)*	*(av ft^3/min)*	*(Mg/year)*	*(m^3/year)*	*(av ft^3/min)*
2024	2.440E+03	1.333E+06	8.956E+01	1.338E+00	3.732E+02	2.508E-02
2025	2.309E+03	1.262E+06	8.476E+01	1.266E+00	3.532E+02	2.373E-02
2026	2.186E+03	1.194E+06	8.023E+01	1.198E+00	3.343E+02	2.246E-02
2027	2.069E+03	1.130E+06	7.593E+01	1.134E+00	3.164E+02	2.126E-02
2028	1.958E+03	1.070E+06	7.187E+01	1.074E+00	2.995E+02	2.012E-02
2029	1.853E+03	1.012E+06	6.802E+01	1.016E+00	2.835E+02	1.905E-02
2030	1.754E+03	9.582E+05	6.438E+01	9.617E-01	2.683E+02	1.803E-02
2031	1.660E+03	9.070E+05	6.094E+01	9.103E-01	2.539E+02	1.706E-02
2032	1.571E+03	8.584E+05	5.768E+01	8.616E-01	2.404E+02	1.615E-02
2033	1.487E+03	8.125E+05	5.459E+01	8.154E-01	2.275E+02	1.529E-02
2034	1.408E+03	7.690E+05	5.167E+01	7.718E-01	2.153E+02	1.447E-02
2035	1.332E+03	7.278E+05	4.890E+01	7.305E-01	2.038E+02	1.369E-02
2036	1.261E+03	6.889E+05	4.629E+01	6.914E-01	1.929E+02	1.296E-02
2037	1.194E+03	6.520E+05	4.381E+01	6.544E-01	1.826E+02	1.227E-02
2038	1.130E+03	6.171E+05	4.147E+01	6.194E-01	1.728E+02	1.161E-02
2039	1.069E+03	5.841E+05	3.925E+01	5.862E-01	1.636E+02	1.099E-02
2040	1.012E+03	5.529E+05	3.715E+01	5.549E-01	1.548E+02	1.040E-02
2041	9.578E+02	5.233E+05	3.516E+01	5.252E-01	1.465E+02	9.844E-03
2042	9.066E+02	4.953E+05	3.328E+01	4.971E-01	1.387E+02	9.317E-03
2043	8.581E+02	4.688E+05	3.150E+01	4.705E-01	1.313E+02	8.819E-03
2044	8.121E+02	4.437E+05	2.981E+01	4.453E-01	1.242E+02	8.347E-03
2045	7.687E+02	4.199E+05	2.822E+01	4.215E-01	1.176E+02	7.900E-03
2046	7.275E+02	3.975E+05	2.671E+01	3.989E-01	1.113E+02	7.477E-03
2047	6.886E+02	3.762E+05	2.528E+01	3.776E-01	1.053E+02	7.077E-03
2048	6.518E+02	3.561E+05	2.392E+01	3.574E-01	9.970E+01	6.699E-03
2049	6.169E+02	3.370E+05	2.264E+01	3.382E-01	9.436E+01	6.340E-03
2050	5.839E+02	3.190E+05	2.143E+01	3.201E-01	8.931E+01	6.001E-03
2051	5.526E+02	3.019E+05	2.028E+01	3.030E-01	8.453E+01	5.680E-03
2052	5.231E+02	2.857E+05	1.920E+01	2.868E-01	8.001E+01	5.376E-03
2053	4.951E+02	2.705E+05	1.817E+01	2.714E-01	7.573E+01	5.088E-03
2054	4.686E+02	2.560E+05	1.720E+01	2.569E-01	7.167E+01	4.816E-03
2055	4.435E+02	2.423E+05	1.628E+01	2.432E-01	6.784E+01	4.558E-03
2056	4.198E+02	2.293E+05	1.541E+01	2.302E-01	6.421E+01	4.314E-03
2057	3.973E+02	2.170E+05	1.458E+01	2.178E-01	6.077E+01	4.083E-03
2058	3.760E+02	2.054E+05	1.380E+01	2.062E-01	5.752E+01	3.865E-03
2059	3.559E+02	1.944E+05	1.306E+01	1.951E-01	5.444E+01	3.658E-03
2060	3.369E+02	1.840E+05	1.236E+01	1.847E-01	5.153E+01	3.462E-03
2061	3.188E+02	1.742E+05	1.170E+01	1.748E-01	4.877E+01	3.277E-03
2062	3.018E+02	1.649E+05	1.108E+01	1.655E-01	4.616E+01	3.102E-03
2063	2.856E+02	1.560E+05	1.048E+01	1.566E-01	4.369E+01	2.936E-03
2064	2.703E+02	1.477E+05	9.923E+00	1.482E-01	4.135E+01	2.778E-03
2065	2.559E+02	1.398E+05	9.392E+00	1.403E-01	3.914E+01	2.630E-03
2066	2.422E+02	1.323E+05	8.889E+00	1.328E-01	3.704E+01	2.489E-03
2067	2.292E+02	1.252E+05	8.414E+00	1.257E-01	3.506E+01	2.356E-03
2068	2.170E+02	1.185E+05	7.963E+00	1.190E-01	3.319E+01	2.230E-03
2069	2.053E+02	1.122E+05	7.537E+00	1.126E-01	3.141E+01	2.110E-03
2070	1.944E+02	1.062E+05	7.134E+00	1.066E-01	2.973E+01	1.997E-03
2071	1.840E+02	1.005E+05	6.752E+00	1.009E-01	2.814E+01	1.891E-03
2072	1.741E+02	9.512E+04	6.391E+00	9.546E-02	2.663E+01	1.789E-03
2073	1.648E+02	9.003E+04	6.049E+00	9.035E-02	2.521E+01	1.694E-03
2074	1.560E+02	8.521E+04	5.725E+00	8.552E-02	2.386E+01	1.603E-03

Summary Report

Landfill Name or Identifier: MPW-Wayne Co. Unit 2

Date: Monday, June 14, 2010

Description/Comments:

About LandGEM:

First-Order Decomposition Rate Equation:

$$Q_{CH_4} = \sum_{i=1}^{n} \sum_{j=0.1}^{1} k L_o \left(\frac{M_i}{10} \right) e^{-k t_{ij}}$$

Where,

Q_{CH4} = annual methane generation in the year of the calculation ($m^3/year$)
i = 1-year time increment
n = (year of the calculation) - (initial year of waste acceptance)
j = 0.1-year time increment
k = methane generation rate ($year^{-1}$)
L_o = potential methane generation capacity (m^3/Mg)

M_i = mass of waste accepted in the ith year (Mg)
t_{ij} = age of the jth section of waste mass M_i accepted in the ith year (*decimal years*, e.g., 3.2 years)

LandGEM is based on a first-order decomposition rate equation for quantifying emissions from the decomposition of landfilled waste in municipal solid waste (MSW) landfills. The software provides a relatively simple approach to estimating landfill gas emissions. Model defaults are based on empirical data from U.S. landfills. Field test data can also be used in place of model defaults when available. Further guidance on EPA test methods, Clean Air Act (CAA) regulations, and other guidance regarding landfill gas emissions and control technology requirements can be found at http://www.epa.gov/ttnatw01/landfill/landflpg.html.

LandGEM is considered a screening tool — the better the input data, the better the estimates. Often, there are limitations with the available data regarding waste quantity and composition, variation in design and operating practices over time, and changes occurring over time that impact the emissions potential. Changes to landfill operation, such as operating under wet conditions through leachate recirculation or other liquid additions, will result in generating more gas at a faster rate. Defaults for estimating emissions for this type of operation are being developed to include in LandGEM along with defaults for convential landfills (no leachate or liquid additions) for developing emission inventories and determining CAA applicability. Refer to the Web site identified above for future updates.

Input Review

LANDFILL CHARACTERISTICS

Landfill Open Year	**1981**	
Landfill Closure Year (with 80-year limit)	**1989**	
Actual Closure Year (without limit)	***1989***	
Have Model Calculate Closure Year?	**No**	
Waste Design Capacity	**704,556**	*short tons*

MODEL PARAMETERS

Methane Generation Rate, k	**0.055**	*year^{-1}*
Potential Methane Generation Capacity, L_o	**147**	*m^3/Mg*
NMOC Concentration	**140**	*ppmv as hexane*
Methane Content	**50**	*% by volume*

GASES / POLLUTANTS SELECTED

Gas / Pollutant #1:	**Total landfill gas**
Gas / Pollutant #2:	**Methane**
Gas / Pollutant #3:	**Carbon dioxide**
Gas / Pollutant #4:	**NMOC**

WASTE ACCEPTANCE RATES

Year	Waste Accepted		Waste-In-Place	
	(Mg/year)	*(short tons/year)*	*(Mg)*	*(short tons)*
1981	71,167	78,284	0	0
1982	71,167	78,284	71,167	78,284
1983	71,167	78,284	142,335	156,568
1984	71,167	78,284	213,502	234,852
1985	71,167	78,284	284,669	313,136
1986	71,167	78,284	355,836	391,420
1987	71,167	78,284	427,004	469,704
1988	71,167	78,284	498,171	547,988
1989	71,167	78,284	569,338	626,272
1990	0	0	640,505	704,556
1991	0	0	640,505	704,556
1992	0	0	640,505	704,556
1993	0	0	640,505	704,556
1994	0	0	640,505	704,556
1995	0	0	640,505	704,556
1996	0	0	640,505	704,556
1997	0	0	640,505	704,556
1998	0	0	640,505	704,556
1999	0	0	640,505	704,556
2000	0	0	640,505	704,556
2001	0	0	640,505	704,556
2002	0	0	640,505	704,556
2003	0	0	640,505	704,556
2004	0	0	640,505	704,556
2005	0	0	640,505	704,556
2006	0	0	640,505	704,556
2007	0	0	640,505	704,556
2008	0	0	640,505	704,556
2009	0	0	640,505	704,556
2010	0	0	640,505	704,556
2011	0	0	640,505	704,556
2012	0	0	640,505	704,556
2013	0	0	640,505	704,556
2014	0	0	640,505	704,556
2015	0	0	640,505	704,556
2016	0	0	640,505	704,556
2017	0	0	640,505	704,556
2018	0	0	640,505	704,556
2019	0	0	640,505	704,556
2020	0	0	640,505	704,556

Pollutant Parameters

		Gas / Pollutant Default Parameters:		User-specified Pollutant Parameters:	
	Compound	Concentration (*ppmv*)	Molecular Weight	Concentration (*ppmv*)	Molecular Weight
Gases	Total landfill gas		0.00		
	Methane		16.04		
	Carbon dioxide		44.01		
	NMOC	4,000	86.18		
Pollutants	1,1,1-Trichloroethane (methyl chloroform) - HAP	0.48	133.41		
	1,1,2,2-Tetrachloroethane - HAP/VOC	1.1	167.85		
	1,1-Dichloroethane (ethylidene dichloride) - HAP/VOC	2.4	98.97		
	1,1-Dichloroethene (vinylidene chloride) - HAP/VOC	0.20	96.94		
	1,2-Dichloroethane (ethylene dichloride) - HAP/VOC	0.41	98.96		
	1,2-Dichloropropane (propylene dichloride) - HAP/VOC	0.18	112.99		
	2-Propanol (isopropyl alcohol) - VOC	50	60.11		
	Acetone	7.0	58.08		
	Acrylonitrile - HAP/VOC	6.3	53.06		
	Benzene - No or Unknown Co-disposal - HAP/VOC	1.9	78.11		
	Benzene - Co-disposal - HAP/VOC	11	78.11		
	Bromodichloromethane - VOC	3.1	163.83		
	Butane - VOC	5.0	58.12		
	Carbon disulfide - HAP/VOC	0.58	76.13		
	Carbon monoxide	140	28.01		
	Carbon tetrachloride - HAP/VOC	4.0E-03	153.84		
	Carbonyl sulfide - HAP/VOC	0.49	60.07		
	Chlorobenzene - HAP/VOC	0.25	112.56		
	Chlorodifluoromethane	1.3	86.47		
	Chloroethane (ethyl chloride) - HAP/VOC	1.3	64.52		
	Chloroform - HAP/VOC	0.03	119.39		
	Chloromethane - VOC	1.2	50.49		
	Dichlorobenzene - (HAP for para isomer/VOC)	0.21	147		
	Dichlorodifluoromethane	16	120.91		
	Dichlorofluoromethane - VOC	2.6	102.92		
	Dichloromethane (methylene chloride) - HAP	14	84.94		
	Dimethyl sulfide (methyl sulfide) - VOC	7.8	62.13		
	Ethane	890	30.07		
	Ethanol - VOC	27	46.08		

Pollutant Parameters (Continued)

	Compound	Gas / Pollutant Default Parameters: Concentration (*ppmv*)	Molecular Weight	User-specified Pollutant Parameters: Concentration (*ppmv*)	Molecular Weight
Pollutants	Ethyl mercaptan (ethanethiol) - VOC	2.3	62.13		
	Ethylbenzene - HAP/VOC	4.6	106.16		
	Ethylene dibromide - HAP/VOC	1.0E-03	187.88		
	Fluorotrichloromethane - VOC	0.76	137.38		
	Hexane - HAP/VOC	6.6	86.18		
	Hydrogen sulfide	36	34.08		
	Mercury (total) - HAP	2.9E-04	200.61		
	Methyl ethyl ketone - HAP/VOC	7.1	72.11		
	Methyl isobutyl ketone - HAP/VOC	1.9	100.16		
	Methyl mercaptan - VOC	2.5	48.11		
	Pentane - VOC	3.3	72.15		
	Perchloroethylene (tetrachloroethylene) - HAP	3.7	165.83		
	Propane - VOC	11	44.09		
	t-1,2-Dichloroethene - VOC	2.8	96.94		
	Toluene - No or Unknown Co-disposal - HAP/VOC	39	92.13		
	Toluene - Co-disposal - HAP/VOC	170	92.13		
	Trichloroethylene (trichloroethene) - HAP/VOC	2.8	131.40		
	Vinyl chloride - HAP/VOC	7.3	62.50		
	Xylenes - HAP/VOC	12	106.16		

Results

Year	Total landfill gas			Methane		
	(Mg/year)	*(m^3/year)*	*(av ft^3/min)*	*(Mg/year)*	*(m^3/year)*	*(av ft^3/min)*
1981	0	0	0	0	0	0
1982	1.402E+03	1.123E+06	7.544E+01	3.745E+02	5.614E+05	3.772E+01
1983	2.729E+03	2.185E+06	1.468E+02	7.290E+02	1.093E+06	7.342E+01
1984	3.985E+03	3.191E+06	2.144E+02	1.065E+03	1.596E+06	1.072E+02
1985	5.174E+03	4.143E+06	2.784E+02	1.382E+03	2.072E+06	1.392E+02
1986	6.300E+03	5.044E+06	3.389E+02	1.683E+03	2.522E+06	1.695E+02
1987	7.365E+03	5.897E+06	3.962E+02	1.967E+03	2.949E+06	1.981E+02
1988	8.373E+03	6.704E+06	4.505E+02	2.236E+03	3.352E+06	2.252E+02
1989	9.327E+03	7.468E+06	5.018E+02	2.491E+03	3.734E+06	2.509E+02
1990	1.023E+04	8.192E+06	5.504E+02	2.732E+03	4.096E+06	2.752E+02
1991	9.682E+03	7.753E+06	5.209E+02	2.586E+03	3.877E+06	2.605E+02
1992	9.164E+03	7.338E+06	4.931E+02	2.448E+03	3.669E+06	2.465E+02
1993	8.674E+03	6.946E+06	4.667E+02	2.317E+03	3.473E+06	2.333E+02
1994	8.210E+03	6.574E+06	4.417E+02	2.193E+03	3.287E+06	2.208E+02
1995	7.770E+03	6.222E+06	4.181E+02	2.076E+03	3.111E+06	2.090E+02
1996	7.354E+03	5.889E+06	3.957E+02	1.964E+03	2.945E+06	1.978E+02
1997	6.961E+03	5.574E+06	3.745E+02	1.859E+03	2.787E+06	1.873E+02
1998	6.588E+03	5.276E+06	3.545E+02	1.760E+03	2.638E+06	1.772E+02
1999	6.236E+03	4.993E+06	3.355E+02	1.666E+03	2.497E+06	1.677E+02
2000	5.902E+03	4.726E+06	3.175E+02	1.577E+03	2.363E+06	1.588E+02
2001	5.586E+03	4.473E+06	3.006E+02	1.492E+03	2.237E+06	1.503E+02
2002	5.287E+03	4.234E+06	2.845E+02	1.412E+03	2.117E+06	1.422E+02
2003	5.004E+03	4.007E+06	2.692E+02	1.337E+03	2.004E+06	1.346E+02
2004	4.737E+03	3.793E+06	2.548E+02	1.265E+03	1.896E+06	1.274E+02
2005	4.483E+03	3.590E+06	2.412E+02	1.197E+03	1.795E+06	1.206E+02
2006	4.243E+03	3.398E+06	2.283E+02	1.133E+03	1.699E+06	1.141E+02
2007	4.016E+03	3.216E+06	2.161E+02	1.073E+03	1.608E+06	1.080E+02
2008	3.801E+03	3.044E+06	2.045E+02	1.015E+03	1.522E+06	1.023E+02
2009	3.598E+03	2.881E+06	1.936E+02	9.610E+02	1.440E+06	9.678E+01
2010	3.405E+03	2.727E+06	1.832E+02	9.096E+02	1.363E+06	9.160E+01
2011	3.223E+03	2.581E+06	1.734E+02	8.609E+02	1.290E+06	8.670E+01
2012	3.050E+03	2.443E+06	1.641E+02	8.148E+02	1.221E+06	8.206E+01
2013	2.887E+03	2.312E+06	1.553E+02	7.712E+02	1.156E+06	7.767E+01
2014	2.733E+03	2.188E+06	1.470E+02	7.299E+02	1.094E+06	7.351E+01
2015	2.586E+03	2.071E+06	1.392E+02	6.909E+02	1.036E+06	6.958E+01
2016	2.448E+03	1.960E+06	1.317E+02	6.539E+02	9.801E+05	6.586E+01
2017	2.317E+03	1.855E+06	1.247E+02	6.189E+02	9.277E+05	6.233E+01
2018	2.193E+03	1.756E+06	1.180E+02	5.858E+02	8.781E+05	5.900E+01
2019	2.076E+03	1.662E+06	1.117E+02	5.544E+02	8.311E+05	5.584E+01
2020	1.965E+03	1.573E+06	1.057E+02	5.248E+02	7.866E+05	5.285E+01
2021	1.859E+03	1.489E+06	1.000E+02	4.967E+02	7.445E+05	5.002E+01
2022	1.760E+03	1.409E+06	9.469E+01	4.701E+02	7.047E+05	4.735E+01
2023	1.666E+03	1.334E+06	8.962E+01	4.450E+02	6.669E+05	4.481E+01
2024	1.577E+03	1.263E+06	8.483E+01	4.211E+02	6.313E+05	4.241E+01
2025	1.492E+03	1.195E+06	8.029E+01	3.986E+02	5.975E+05	4.014E+01
2026	1.412E+03	1.131E+06	7.599E+01	3.773E+02	5.655E+05	3.800E+01
2027	1.337E+03	1.070E+06	7.192E+01	3.571E+02	5.352E+05	3.596E+01
2028	1.265E+03	1.013E+06	6.808E+01	3.380E+02	5.066E+05	3.404E+01
2029	1.198E+03	9.590E+05	6.443E+01	3.199E+02	4.795E+05	3.222E+01
2030	1.133E+03	9.076E+05	6.098E+01	3.028E+02	4.538E+05	3.049E+01

Results (Continued)

Year	Total landfill gas			Methane		
	(Mg/year)	*(m^3/year)*	*(av ft^3/min)*	*(Mg/year)*	*(m^3/year)*	*(av ft^3/min)*
2031	1.073E+03	8.591E+05	5.772E+01	2.866E+02	4.295E+05	2.886E+01
2032	1.015E+03	8.131E+05	5.463E+01	2.712E+02	4.065E+05	2.732E+01
2033	9.611E+02	7.696E+05	5.171E+01	2.567E+02	3.848E+05	2.585E+01
2034	9.096E+02	7.284E+05	4.894E+01	2.430E+02	3.642E+05	2.447E+01
2035	8.610E+02	6.894E+05	4.632E+01	2.300E+02	3.447E+05	2.316E+01
2036	8.149E+02	6.525E+05	4.384E+01	2.177E+02	3.263E+05	2.192E+01
2037	7.713E+02	6.176E+05	4.150E+01	2.060E+02	3.088E+05	2.075E+01
2038	7.300E+02	5.846E+05	3.928E+01	1.950E+02	2.923E+05	1.964E+01
2039	6.909E+02	5.533E+05	3.717E+01	1.846E+02	2.766E+05	1.859E+01
2040	6.540E+02	5.237E+05	3.519E+01	1.747E+02	2.618E+05	1.759E+01
2041	6.190E+02	4.956E+05	3.330E+01	1.653E+02	2.478E+05	1.665E+01
2042	5.858E+02	4.691E+05	3.152E+01	1.565E+02	2.346E+05	1.576E+01
2043	5.545E+02	4.440E+05	2.983E+01	1.481E+02	2.220E+05	1.492E+01
2044	5.248E+02	4.203E+05	2.824E+01	1.402E+02	2.101E+05	1.412E+01
2045	4.967E+02	3.978E+05	2.673E+01	1.327E+02	1.989E+05	1.336E+01
2046	4.702E+02	3.765E+05	2.530E+01	1.256E+02	1.882E+05	1.265E+01
2047	4.450E+02	3.563E+05	2.394E+01	1.189E+02	1.782E+05	1.197E+01
2048	4.212E+02	3.373E+05	2.266E+01	1.125E+02	1.686E+05	1.133E+01
2049	3.986E+02	3.192E+05	2.145E+01	1.065E+02	1.596E+05	1.072E+01
2050	3.773E+02	3.021E+05	2.030E+01	1.008E+02	1.511E+05	1.015E+01
2051	3.571E+02	2.860E+05	1.921E+01	9.539E+01	1.430E+05	9.607E+00
2052	3.380E+02	2.707E+05	1.819E+01	9.028E+01	1.353E+05	9.093E+00
2053	3.199E+02	2.562E+05	1.721E+01	8.545E+01	1.281E+05	8.606E+00
2054	3.028E+02	2.425E+05	1.629E+01	8.088E+01	1.212E+05	8.146E+00
2055	2.866E+02	2.295E+05	1.542E+01	7.655E+01	1.147E+05	7.710E+00
2056	2.713E+02	2.172E+05	1.459E+01	7.245E+01	1.086E+05	7.297E+00
2057	2.567E+02	2.056E+05	1.381E+01	6.858E+01	1.028E+05	6.907E+00
2058	2.430E+02	1.946E+05	1.307E+01	6.491E+01	9.729E+04	6.537E+00
2059	2.300E+02	1.842E+05	1.237E+01	6.143E+01	9.208E+04	6.187E+00
2060	2.177E+02	1.743E+05	1.171E+01	5.815E+01	8.716E+04	5.856E+00
2061	2.060E+02	1.650E+05	1.109E+01	5.503E+01	8.249E+04	5.543E+00
2062	1.950E+02	1.562E+05	1.049E+01	5.209E+01	7.808E+04	5.246E+00
2063	1.846E+02	1.478E+05	9.931E+00	4.930E+01	7.390E+04	4.965E+00
2064	1.747E+02	1.399E+05	9.399E+00	4.666E+01	6.994E+04	4.700E+00
2065	1.653E+02	1.324E+05	8.896E+00	4.417E+01	6.620E+04	4.448E+00
2066	1.565E+02	1.253E+05	8.420E+00	4.180E+01	6.266E+04	4.210E+00
2067	1.481E+02	1.186E+05	7.969E+00	3.957E+01	5.931E+04	3.985E+00
2068	1.402E+02	1.123E+05	7.543E+00	3.745E+01	5.613E+04	3.772E+00
2069	1.327E+02	1.063E+05	7.139E+00	3.544E+01	5.313E+04	3.570E+00
2070	1.256E+02	1.006E+05	6.757E+00	3.355E+01	5.028E+04	3.379E+00
2071	1.189E+02	9.519E+04	6.396E+00	3.175E+01	4.759E+04	3.198E+00
2072	1.125E+02	9.009E+04	6.053E+00	3.005E+01	4.505E+04	3.027E+00
2073	1.065E+02	8.527E+04	5.729E+00	2.844E+01	4.264E+04	2.865E+00
2074	1.008E+02	8.071E+04	5.423E+00	2.692E+01	4.035E+04	2.711E+00
2075	9.540E+01	7.639E+04	5.133E+00	2.548E+01	3.820E+04	2.566E+00
2076	9.029E+01	7.230E+04	4.858E+00	2.412E+01	3.615E+04	2.429E+00
2077	8.546E+01	6.843E+04	4.598E+00	2.283E+01	3.422E+04	2.299E+00
2078	8.089E+01	6.477E+04	4.352E+00	2.161E+01	3.239E+04	2.176E+00
2079	7.656E+01	6.130E+04	4.119E+00	2.045E+01	3.065E+04	2.060E+00
2080	7.246E+01	5.802E+04	3.899E+00	1.936E+01	2.901E+04	1.949E+00
2081	6.858E+01	5.492E+04	3.690E+00	1.832E+01	2.746E+04	1.845E+00

Results (Continued)

Year	Carbon dioxide			NMOC		
	(Mg/year)	*(m^3/year)*	*(av ft^3/min)*	*(Mg/year)*	*(m^3/year)*	*(av ft^3/min)*
1981	0	0	0	0	0	0
1982	1.028E+03	5.614E+05	3.772E+01	5.634E-01	1.572E+02	1.056E-02
1983	2.000E+03	1.093E+06	7.342E+01	1.097E+00	3.060E+02	2.056E-02
1984	2.921E+03	1.596E+06	1.072E+02	1.601E+00	4.468E+02	3.002E-02
1985	3.792E+03	2.072E+06	1.392E+02	2.079E+00	5.801E+02	3.897E-02
1986	4.617E+03	2.522E+06	1.695E+02	2.531E+00	7.062E+02	4.745E-02
1987	5.397E+03	2.949E+06	1.981E+02	2.959E+00	8.256E+02	5.547E-02
1988	6.136E+03	3.352E+06	2.252E+02	3.364E+00	9.386E+02	6.307E-02
1989	6.835E+03	3.734E+06	2.509E+02	3.748E+00	1.046E+03	7.025E-02
1990	7.497E+03	4.096E+06	2.752E+02	4.111E+00	1.147E+03	7.705E-02
1991	7.096E+03	3.877E+06	2.605E+02	3.891E+00	1.085E+03	7.293E-02
1992	6.716E+03	3.669E+06	2.465E+02	3.683E+00	1.027E+03	6.903E-02
1993	6.357E+03	3.473E+06	2.333E+02	3.485E+00	9.724E+02	6.533E-02
1994	6.017E+03	3.287E+06	2.208E+02	3.299E+00	9.203E+02	6.184E-02
1995	5.695E+03	3.111E+06	2.090E+02	3.122E+00	8.711E+02	5.853E-02
1996	5.390E+03	2.945E+06	1.978E+02	2.955E+00	8.245E+02	5.540E-02
1997	5.102E+03	2.787E+06	1.873E+02	2.797E+00	7.803E+02	5.243E-02
1998	4.829E+03	2.638E+06	1.772E+02	2.647E+00	7.386E+02	4.963E-02
1999	4.570E+03	2.497E+06	1.677E+02	2.506E+00	6.991E+02	4.697E-02
2000	4.326E+03	2.363E+06	1.588E+02	2.372E+00	6.617E+02	4.446E-02
2001	4.094E+03	2.237E+06	1.503E+02	2.245E+00	6.262E+02	4.208E-02
2002	3.875E+03	2.117E+06	1.422E+02	2.125E+00	5.927E+02	3.983E-02
2003	3.668E+03	2.004E+06	1.346E+02	2.011E+00	5.610E+02	3.769E-02
2004	3.471E+03	1.896E+06	1.274E+02	1.903E+00	5.310E+02	3.568E-02
2005	3.286E+03	1.795E+06	1.206E+02	1.801E+00	5.026E+02	3.377E-02
2006	3.110E+03	1.699E+06	1.141E+02	1.705E+00	4.757E+02	3.196E-02
2007	2.943E+03	1.608E+06	1.080E+02	1.614E+00	4.502E+02	3.025E-02
2008	2.786E+03	1.522E+06	1.023E+02	1.527E+00	4.261E+02	2.863E-02
2009	2.637E+03	1.440E+06	9.678E+01	1.446E+00	4.033E+02	2.710E-02
2010	2.496E+03	1.363E+06	9.160E+01	1.368E+00	3.817E+02	2.565E-02
2011	2.362E+03	1.290E+06	8.670E+01	1.295E+00	3.613E+02	2.428E-02
2012	2.236E+03	1.221E+06	8.206E+01	1.226E+00	3.420E+02	2.298E-02
2013	2.116E+03	1.156E+06	7.767E+01	1.160E+00	3.237E+02	2.175E-02
2014	2.003E+03	1.094E+06	7.351E+01	1.098E+00	3.064E+02	2.058E-02
2015	1.896E+03	1.036E+06	6.958E+01	1.039E+00	2.900E+02	1.948E-02
2016	1.794E+03	9.801E+05	6.586E+01	9.837E-01	2.744E+02	1.844E-02
2017	1.698E+03	9.277E+05	6.233E+01	9.311E-01	2.598E+02	1.745E-02
2018	1.607E+03	8.781E+05	5.900E+01	8.813E-01	2.459E+02	1.652E-02
2019	1.521E+03	8.311E+05	5.584E+01	8.341E-01	2.327E+02	1.563E-02
2020	1.440E+03	7.866E+05	5.285E+01	7.895E-01	2.202E+02	1.480E-02
2021	1.363E+03	7.445E+05	5.002E+01	7.472E-01	2.085E+02	1.401E-02
2022	1.290E+03	7.047E+05	4.735E+01	7.072E-01	1.973E+02	1.326E-02
2023	1.221E+03	6.669E+05	4.481E+01	6.694E-01	1.867E+02	1.255E-02
2024	1.156E+03	6.313E+05	4.241E+01	6.336E-01	1.768E+02	1.188E-02
2025	1.094E+03	5.975E+05	4.014E+01	5.997E-01	1.673E+02	1.124E-02
2026	1.035E+03	5.655E+05	3.800E+01	5.676E-01	1.583E+02	1.064E-02
2027	9.797E+02	5.352E+05	3.596E+01	5.372E-01	1.499E+02	1.007E-02
2028	9.273E+02	5.066E+05	3.404E+01	5.084E-01	1.418E+02	9.531E-03
2029	8.777E+02	4.795E+05	3.222E+01	4.812E-01	1.343E+02	9.021E-03
2030	8.307E+02	4.538E+05	3.049E+01	4.555E-01	1.271E+02	8.538E-03

Results (Continued)

Year	Carbon dioxide			NMOC		
	(Mg/year)	*(m^3/year)*	*(av ft^3/min)*	*(Mg/year)*	*(m^3/year)*	*(av ft^3/min)*
2031	7.863E+02	4.295E+05	2.886E+01	4.311E-01	1.203E+02	8.081E-03
2032	7.442E+02	4.065E+05	2.732E+01	4.080E-01	1.138E+02	7.648E-03
2033	7.044E+02	3.848E+05	2.585E+01	3.862E-01	1.077E+02	7.239E-03
2034	6.667E+02	3.642E+05	2.447E+01	3.655E-01	1.020E+02	6.852E-03
2035	6.310E+02	3.447E+05	2.316E+01	3.460E-01	9.652E+01	6.485E-03
2036	5.972E+02	3.263E+05	2.192E+01	3.275E-01	9.135E+01	6.138E-03
2037	5.653E+02	3.088E+05	2.075E+01	3.099E-01	8.647E+01	5.810E-03
2038	5.350E+02	2.923E+05	1.964E+01	2.933E-01	8.184E+01	5.499E-03
2039	5.064E+02	2.766E+05	1.859E+01	2.776E-01	7.746E+01	5.204E-03
2040	4.793E+02	2.618E+05	1.759E+01	2.628E-01	7.331E+01	4.926E-03
2041	4.536E+02	2.478E+05	1.665E+01	2.487E-01	6.939E+01	4.662E-03
2042	4.294E+02	2.346E+05	1.576E+01	2.354E-01	6.568E+01	4.413E-03
2043	4.064E+02	2.220E+05	1.492E+01	2.228E-01	6.216E+01	4.177E-03
2044	3.846E+02	2.101E+05	1.412E+01	2.109E-01	5.884E+01	3.953E-03
2045	3.641E+02	1.989E+05	1.336E+01	1.996E-01	5.569E+01	3.742E-03
2046	3.446E+02	1.882E+05	1.265E+01	1.889E-01	5.271E+01	3.541E-03
2047	3.261E+02	1.782E+05	1.197E+01	1.788E-01	4.989E+01	3.352E-03
2048	3.087E+02	1.686E+05	1.133E+01	1.692E-01	4.722E+01	3.172E-03
2049	2.922E+02	1.596E+05	1.072E+01	1.602E-01	4.469E+01	3.003E-03
2050	2.765E+02	1.511E+05	1.015E+01	1.516E-01	4.230E+01	2.842E-03
2051	2.617E+02	1.430E+05	9.607E+00	1.435E-01	4.003E+01	2.690E-03
2052	2.477E+02	1.353E+05	9.093E+00	1.358E-01	3.789E+01	2.546E-03
2053	2.345E+02	1.281E+05	8.606E+00	1.286E-01	3.586E+01	2.410E-03
2054	2.219E+02	1.212E+05	8.146E+00	1.217E-01	3.394E+01	2.281E-03
2055	2.100E+02	1.147E+05	7.710E+00	1.152E-01	3.213E+01	2.159E-03
2056	1.988E+02	1.086E+05	7.297E+00	1.090E-01	3.041E+01	2.043E-03
2057	1.882E+02	1.028E+05	6.907E+00	1.032E-01	2.878E+01	1.934E-03
2058	1.781E+02	9.729E+04	6.537E+00	9.765E-02	2.724E+01	1.830E-03
2059	1.686E+02	9.208E+04	6.187E+00	9.242E-02	2.578E+01	1.732E-03
2060	1.595E+02	8.716E+04	5.856E+00	8.747E-02	2.440E+01	1.640E-03
2061	1.510E+02	8.249E+04	5.543E+00	8.279E-02	2.310E+01	1.552E-03
2062	1.429E+02	7.808E+04	5.246E+00	7.836E-02	2.186E+01	1.469E-03
2063	1.353E+02	7.390E+04	4.965E+00	7.417E-02	2.069E+01	1.390E-03
2064	1.280E+02	6.994E+04	4.700E+00	7.020E-02	1.958E+01	1.316E-03
2065	1.212E+02	6.620E+04	4.448E+00	6.644E-02	1.854E+01	1.245E-03
2066	1.147E+02	6.266E+04	4.210E+00	6.289E-02	1.754E+01	1.179E-03
2067	1.086E+02	5.931E+04	3.985E+00	5.952E-02	1.661E+01	1.116E-03
2068	1.027E+02	5.613E+04	3.772E+00	5.634E-02	1.572E+01	1.056E-03
2069	9.725E+01	5.313E+04	3.570E+00	5.332E-02	1.488E+01	9.995E-04
2070	9.205E+01	5.028E+04	3.379E+00	5.047E-02	1.408E+01	9.460E-04
2071	8.712E+01	4.759E+04	3.198E+00	4.777E-02	1.333E+01	8.954E-04
2072	8.246E+01	4.505E+04	3.027E+00	4.521E-02	1.261E+01	8.475E-04
2073	7.805E+01	4.264E+04	2.865E+00	4.279E-02	1.194E+01	8.021E-04
2074	7.387E+01	4.035E+04	2.711E+00	4.050E-02	1.130E+01	7.592E-04
2075	6.992E+01	3.820E+04	2.566E+00	3.833E-02	1.069E+01	7.186E-04
2076	6.617E+01	3.615E+04	2.429E+00	3.628E-02	1.012E+01	6.801E-04
2077	6.263E+01	3.422E+04	2.299E+00	3.434E-02	9.581E+00	6.437E-04
2078	5.928E+01	3.239E+04	2.176E+00	3.250E-02	9.068E+00	6.093E-04
2079	5.611E+01	3.065E+04	2.060E+00	3.076E-02	8.583E+00	5.767E-04
2080	5.311E+01	2.901E+04	1.949E+00	2.912E-02	8.123E+00	5.458E-04
2081	5.026E+01	2.746E+04	1.845E+00	2.756E-02	7.689E+00	5.166E-04

Summary Report

Landfill Name or Identifier: MPW-Wayne Co. Unit 3 Phase 1

Date: Monday, June 14, 2010

Description/Comments:

About LandGEM:

First-Order Decomposition Rate Equation:

$$Q_{CH_4} = \sum_{i=1}^{n} \sum_{j=0.1}^{1} k L_o \left(\frac{M_i}{10} \right) e^{-k t_{ij}}$$

Where,

Q_{CH4} = annual methane generation in the year of the calculation ($m^3/year$)
i = 1-year time increment
n = (year of the calculation) - (initial year of waste acceptance)
j = 0.1-year time increment
k = methane generation rate ($year^{-1}$)
L_o = potential methane generation capacity (m^3/Mg)

M_i = mass of waste accepted in the ith year (Mg)
t_{ij} = age of the jth section of waste mass M_i accepted in the ith year (*decimal years*, e.g., 3.2 years)

LandGEM is based on a first-order decomposition rate equation for quantifying emissions from the decomposition of landfilled waste in municipal solid waste (MSW) landfills. The software provides a relatively simple approach to estimating landfill gas emissions. Model defaults are based on empirical data from U.S. landfills. Field test data can also be used in place of model defaults when available. Further guidance on EPA test methods, Clean Air Act (CAA) regulations, and other guidance regarding landfill gas emissions and control technology requirements can be found at http://www.epa.gov/ttnatw01/landfill/landflpg.html.

LandGEM is considered a screening tool — the better the input data, the better the estimates. Often, there are limitations with the available data regarding waste quantity and composition, variation in design and operating practices over time, and changes occurring over time that impact the emissions potential. Changes to landfill operation, such as operating under wet conditions through leachate recirculation or other liquid additions, will result in generating more gas at a faster rate. Defaults for estimating emissions for this type of operation are being developed to include in LandGEM along with defaults for convential landfills (no leachate or liquid additions) for developing emission inventories and determining CAA applicability. Refer to the Web site identified above for future updates.

Input Review

LANDFILL CHARACTERISTICS

Landfill Open Year	**1998**	
Landfill Closure Year (with 80-year limit)	**2002**	
Actual Closure Year (without limit)	***2002***	
Have Model Calculate Closure Year?	**No**	
Waste Design Capacity	**455,774**	*short tons*

MODEL PARAMETERS

Methane Generation Rate, k	**0.055**	*$year^{-1}$*
Potential Methane Generation Capacity, L_o	**147**	*m^3/Mg*
NMOC Concentration	**140**	*ppmv as hexane*
Methane Content	**50**	*% by volume*

GASES / POLLUTANTS SELECTED

Gas / Pollutant #1:	**Total landfill gas**
Gas / Pollutant #2:	**Methane**
Gas / Pollutant #3:	**Carbon dioxide**
Gas / Pollutant #4:	**NMOC**

WASTE ACCEPTANCE RATES

Year	Waste Accepted		Waste-In-Place	
	(Mg/year)	*(short tons/year)*	*(Mg)*	*(short tons)*
1998	79,106	87,017	0	0
1999	93,564	102,920	79,106	87,017
2000	84,567	93,024	172,670	189,937
2001	76,475	84,123	257,237	282,961
2002	80,627	88,690	333,713	367,084
2003	0	0	414,340	455,774
2004	0	0	414,340	455,774
2005	0	0	414,340	455,774
2006	0	0	414,340	455,774
2007	0	0	414,340	455,774
2008	0	0	414,340	455,774
2009	0	0	414,340	455,774
2010	0	0	414,340	455,774
2011	0	0	414,340	455,774
2012	0	0	414,340	455,774
2013	0	0	414,340	455,774
2014	0	0	414,340	455,774
2015	0	0	414,340	455,774
2016	0	0	414,340	455,774
2017	0	0	414,340	455,774
2018	0	0	414,340	455,774
2019	0	0	414,340	455,774
2020	0	0	414,340	455,774
2021	0	0	414,340	455,774
2022	0	0	414,340	455,774
2023	0	0	414,340	455,774
2024	0	0	414,340	455,774
2025	0	0	414,340	455,774
2026	0	0	414,340	455,774
2027	0	0	414,340	455,774
2028	0	0	414,340	455,774
2029	0	0	414,340	455,774
2030	0	0	414,340	455,774
2031	0	0	414,340	455,774
2032	0	0	414,340	455,774
2033	0	0	414,340	455,774
2034	0	0	414,340	455,774
2035	0	0	414,340	455,774
2036	0	0	414,340	455,774
2037	0	0	414,340	455,774

Pollutant Parameters

		Gas / Pollutant Default Parameters:		User-specified Pollutant Parameters:	
	Compound	Concentration (*ppmv*)	Molecular Weight	Concentration (*ppmv*)	Molecular Weight
Gases	Total landfill gas		0.00		
	Methane		16.04		
	Carbon dioxide		44.01		
	NMOC	4,000	86.18		
Pollutants	1,1,1-Trichloroethane (methyl chloroform) - HAP	0.48	133.41		
	1,1,2,2-Tetrachloroethane - HAP/VOC	1.1	167.85		
	1,1-Dichloroethane (ethylidene dichloride) - HAP/VOC	2.4	98.97		
	1,1-Dichloroethene (vinylidene chloride) - HAP/VOC	0.20	96.94		
	1,2-Dichloroethane (ethylene dichloride) - HAP/VOC	0.41	98.96		
	1,2-Dichloropropane (propylene dichloride) - HAP/VOC	0.18	112.99		
	2-Propanol (isopropyl alcohol) - VOC	50	60.11		
	Acetone	7.0	58.08		
	Acrylonitrile - HAP/VOC	6.3	53.06		
	Benzene - No or Unknown Co-disposal - HAP/VOC	1.9	78.11		
	Benzene - Co-disposal - HAP/VOC	11	78.11		
	Bromodichloromethane - VOC	3.1	163.83		
	Butane - VOC	5.0	58.12		
	Carbon disulfide - HAP/VOC	0.58	76.13		
	Carbon monoxide	140	28.01		
	Carbon tetrachloride - HAP/VOC	4.0E-03	153.84		
	Carbonyl sulfide - HAP/VOC	0.49	60.07		
	Chlorobenzene - HAP/VOC	0.25	112.56		
	Chlorodifluoromethane	1.3	86.47		
	Chloroethane (ethyl chloride) - HAP/VOC	1.3	64.52		
	Chloroform - HAP/VOC	0.03	119.39		
	Chloromethane - VOC	1.2	50.49		
	Dichlorobenzene - (HAP for para isomer/VOC)	0.21	147		
	Dichlorodifluoromethane	16	120.91		
	Dichlorofluoromethane - VOC	2.6	102.92		
	Dichloromethane (methylene chloride) - HAP	14	84.94		
	Dimethyl sulfide (methyl sulfide) - VOC	7.8	62.13		
	Ethane	890	30.07		
	Ethanol - VOC	27	46.08		

Pollutant Parameters (Continued)

	Compound	Gas / Pollutant Default Parameters: Concentration (*ppmv*)	Molecular Weight	User-specified Pollutant Parameters: Concentration (*ppmv*)	Molecular Weight
Pollutants	Ethyl mercaptan (ethanethiol) - VOC	2.3	62.13		
	Ethylbenzene - HAP/VOC	4.6	106.16		
	Ethylene dibromide - HAP/VOC	1.0E-03	187.88		
	Fluorotrichloromethane - VOC	0.76	137.38		
	Hexane - HAP/VOC	6.6	86.18		
	Hydrogen sulfide	36	34.08		
	Mercury (total) - HAP	2.9E-04	200.61		
	Methyl ethyl ketone - HAP/VOC	7.1	72.11		
	Methyl isobutyl ketone - HAP/VOC	1.9	100.16		
	Methyl mercaptan - VOC	2.5	48.11		
	Pentane - VOC	3.3	72.15		
	Perchloroethylene (tetrachloroethylene) - HAP	3.7	165.83		
	Propane - VOC	11	44.09		
	t-1,2-Dichloroethene - VOC	2.8	96.94		
	Toluene - No or Unknown Co-disposal - HAP/VOC	39	92.13		
	Toluene - Co-disposal - HAP/VOC	170	92.13		
	Trichloroethylene (trichloroethene) - HAP/VOC	2.8	131.40		
	Vinyl chloride - HAP/VOC	7.3	62.50		
	Xylenes - HAP/VOC	12	106.16		

Results

Year	Total landfill gas			Methane		
	(Mg/year)	*(m^3/year)*	*(av ft^3/min)*	*(Mg/year)*	*(m^3/year)*	*(av ft^3/min)*
1998	0	0	0	0	0	0
1999	1.553E+03	1.244E+06	8.356E+01	4.148E+02	6.218E+05	4.178E+01
2000	3.307E+03	2.648E+06	1.779E+02	8.834E+02	1.324E+06	8.897E+01
2001	4.791E+03	3.836E+06	2.578E+02	1.280E+03	1.918E+06	1.289E+02
2002	6.037E+03	4.834E+06	3.248E+02	1.613E+03	2.417E+06	1.624E+02
2003	7.298E+03	5.844E+06	3.926E+02	1.949E+03	2.922E+06	1.963E+02
2004	6.909E+03	5.532E+06	3.717E+02	1.845E+03	2.766E+06	1.859E+02
2005	6.540E+03	5.237E+06	3.519E+02	1.747E+03	2.619E+06	1.759E+02
2006	6.192E+03	4.958E+06	3.331E+02	1.654E+03	2.479E+06	1.666E+02
2007	5.861E+03	4.694E+06	3.154E+02	1.566E+03	2.347E+06	1.577E+02
2008	5.549E+03	4.443E+06	2.985E+02	1.482E+03	2.222E+06	1.493E+02
2009	5.253E+03	4.206E+06	2.826E+02	1.403E+03	2.103E+06	1.413E+02
2010	4.973E+03	3.982E+06	2.676E+02	1.328E+03	1.991E+06	1.338E+02
2011	4.708E+03	3.770E+06	2.533E+02	1.257E+03	1.885E+06	1.266E+02
2012	4.457E+03	3.569E+06	2.398E+02	1.190E+03	1.784E+06	1.199E+02
2013	4.219E+03	3.378E+06	2.270E+02	1.127E+03	1.689E+06	1.135E+02
2014	3.994E+03	3.198E+06	2.149E+02	1.067E+03	1.599E+06	1.074E+02
2015	3.781E+03	3.028E+06	2.034E+02	1.010E+03	1.514E+06	1.017E+02
2016	3.579E+03	2.866E+06	1.926E+02	9.561E+02	1.433E+06	9.629E+01
2017	3.389E+03	2.713E+06	1.823E+02	9.051E+02	1.357E+06	9.115E+01
2018	3.208E+03	2.569E+06	1.726E+02	8.568E+02	1.284E+06	8.629E+01
2019	3.037E+03	2.432E+06	1.634E+02	8.111E+02	1.216E+06	8.169E+01
2020	2.875E+03	2.302E+06	1.547E+02	7.679E+02	1.151E+06	7.734E+01
2021	2.722E+03	2.179E+06	1.464E+02	7.269E+02	1.090E+06	7.321E+01
2022	2.576E+03	2.063E+06	1.386E+02	6.882E+02	1.032E+06	6.931E+01
2023	2.439E+03	1.953E+06	1.312E+02	6.515E+02	9.765E+05	6.561E+01
2024	2.309E+03	1.849E+06	1.242E+02	6.167E+02	9.244E+05	6.211E+01
2025	2.186E+03	1.750E+06	1.176E+02	5.839E+02	8.751E+05	5.880E+01
2026	2.069E+03	1.657E+06	1.113E+02	5.527E+02	8.285E+05	5.567E+01
2027	1.959E+03	1.569E+06	1.054E+02	5.232E+02	7.843E+05	5.270E+01
2028	1.854E+03	1.485E+06	9.977E+01	4.953E+02	7.425E+05	4.989E+01
2029	1.756E+03	1.406E+06	9.445E+01	4.689E+02	7.029E+05	4.723E+01
2030	1.662E+03	1.331E+06	8.942E+01	4.439E+02	6.654E+05	4.471E+01
2031	1.573E+03	1.260E+06	8.465E+01	4.203E+02	6.299E+05	4.232E+01
2032	1.489E+03	1.193E+06	8.013E+01	3.978E+02	5.963E+05	4.007E+01
2033	1.410E+03	1.129E+06	7.586E+01	3.766E+02	5.645E+05	3.793E+01
2034	1.335E+03	1.069E+06	7.182E+01	3.565E+02	5.344E+05	3.591E+01
2035	1.264E+03	1.012E+06	6.799E+01	3.375E+02	5.059E+05	3.399E+01
2036	1.196E+03	9.579E+05	6.436E+01	3.195E+02	4.789E+05	3.218E+01
2037	1.132E+03	9.068E+05	6.093E+01	3.025E+02	4.534E+05	3.046E+01
2038	1.072E+03	8.585E+05	5.768E+01	2.864E+02	4.292E+05	2.884E+01
2039	1.015E+03	8.127E+05	5.460E+01	2.711E+02	4.063E+05	2.730E+01
2040	9.608E+02	7.693E+05	5.169E+01	2.566E+02	3.847E+05	2.585E+01
2041	9.095E+02	7.283E+05	4.894E+01	2.429E+02	3.642E+05	2.447E+01
2042	8.610E+02	6.895E+05	4.633E+01	2.300E+02	3.447E+05	2.316E+01
2043	8.151E+02	6.527E+05	4.386E+01	2.177E+02	3.264E+05	2.193E+01
2044	7.717E+02	6.179E+05	4.152E+01	2.061E+02	3.090E+05	2.076E+01
2045	7.305E+02	5.850E+05	3.930E+01	1.951E+02	2.925E+05	1.965E+01
2046	6.916E+02	5.538E+05	3.721E+01	1.847E+02	2.769E+05	1.860E+01
2047	6.547E+02	5.242E+05	3.522E+01	1.749E+02	2.621E+05	1.761E+01

Results (Continued)

Year	Total landfill gas			Methane		
	(Mg/year)	*(m^3/year)*	*(av ft^3/min)*	*(Mg/year)*	*(m^3/year)*	*(av ft^3/min)*
2048	6.198E+02	4.963E+05	3.335E+01	1.655E+02	2.481E+05	1.667E+01
2049	5.867E+02	4.698E+05	3.157E+01	1.567E+02	2.349E+05	1.578E+01
2050	5.554E+02	4.448E+05	2.988E+01	1.484E+02	2.224E+05	1.494E+01
2051	5.258E+02	4.210E+05	2.829E+01	1.404E+02	2.105E+05	1.414E+01
2052	4.978E+02	3.986E+05	2.678E+01	1.330E+02	1.993E+05	1.339E+01
2053	4.712E+02	3.773E+05	2.535E+01	1.259E+02	1.887E+05	1.268E+01
2054	4.461E+02	3.572E+05	2.400E+01	1.192E+02	1.786E+05	1.200E+01
2055	4.223E+02	3.382E+05	2.272E+01	1.128E+02	1.691E+05	1.136E+01
2056	3.998E+02	3.201E+05	2.151E+01	1.068E+02	1.601E+05	1.075E+01
2057	3.785E+02	3.031E+05	2.036E+01	1.011E+02	1.515E+05	1.018E+01
2058	3.583E+02	2.869E+05	1.928E+01	9.570E+01	1.435E+05	9.638E+00
2059	3.392E+02	2.716E+05	1.825E+01	9.060E+01	1.358E+05	9.124E+00
2060	3.211E+02	2.571E+05	1.728E+01	8.577E+01	1.286E+05	8.638E+00
2061	3.040E+02	2.434E+05	1.635E+01	8.119E+01	1.217E+05	8.177E+00
2062	2.878E+02	2.304E+05	1.548E+01	7.687E+01	1.152E+05	7.741E+00
2063	2.724E+02	2.181E+05	1.466E+01	7.277E+01	1.091E+05	7.328E+00
2064	2.579E+02	2.065E+05	1.388E+01	6.889E+01	1.033E+05	6.938E+00
2065	2.441E+02	1.955E+05	1.314E+01	6.521E+01	9.775E+04	6.568E+00
2066	2.311E+02	1.851E+05	1.243E+01	6.173E+01	9.254E+04	6.217E+00
2067	2.188E+02	1.752E+05	1.177E+01	5.844E+01	8.760E+04	5.886E+00
2068	2.071E+02	1.659E+05	1.114E+01	5.533E+01	8.293E+04	5.572E+00
2069	1.961E+02	1.570E+05	1.055E+01	5.238E+01	7.851E+04	5.275E+00
2070	1.856E+02	1.486E+05	9.987E+00	4.958E+01	7.432E+04	4.994E+00
2071	1.757E+02	1.407E+05	9.455E+00	4.694E+01	7.036E+04	4.727E+00
2072	1.664E+02	1.332E+05	8.950E+00	4.444E+01	6.661E+04	4.475E+00
2073	1.575E+02	1.261E+05	8.473E+00	4.207E+01	6.305E+04	4.237E+00
2074	1.491E+02	1.194E+05	8.021E+00	3.982E+01	5.969E+04	4.011E+00
2075	1.411E+02	1.130E+05	7.594E+00	3.770E+01	5.651E+04	3.797E+00
2076	1.336E+02	1.070E+05	7.189E+00	3.569E+01	5.350E+04	3.594E+00
2077	1.265E+02	1.013E+05	6.805E+00	3.379E+01	5.064E+04	3.403E+00
2078	1.197E+02	9.588E+04	6.442E+00	3.198E+01	4.794E+04	3.221E+00
2079	1.134E+02	9.077E+04	6.099E+00	3.028E+01	4.539E+04	3.049E+00
2080	1.073E+02	8.593E+04	5.774E+00	2.866E+01	4.297E+04	2.887E+00
2081	1.016E+02	8.135E+04	5.466E+00	2.714E+01	4.067E+04	2.733E+00
2082	9.617E+01	7.701E+04	5.174E+00	2.569E+01	3.851E+04	2.587E+00
2083	9.104E+01	7.290E+04	4.898E+00	2.432E+01	3.645E+04	2.449E+00
2084	8.619E+01	6.902E+04	4.637E+00	2.302E+01	3.451E+04	2.319E+00
2085	8.159E+01	6.534E+04	4.390E+00	2.179E+01	3.267E+04	2.195E+00
2086	7.724E+01	6.185E+04	4.156E+00	2.063E+01	3.093E+04	2.078E+00
2087	7.312E+01	5.855E+04	3.934E+00	1.953E+01	2.928E+04	1.967E+00
2088	6.922E+01	5.543E+04	3.724E+00	1.849E+01	2.772E+04	1.862E+00
2089	6.553E+01	5.248E+04	3.526E+00	1.750E+01	2.624E+04	1.763E+00
2090	6.204E+01	4.968E+04	3.338E+00	1.657E+01	2.484E+04	1.669E+00
2091	5.873E+01	4.703E+04	3.160E+00	1.569E+01	2.351E+04	1.580E+00
2092	5.560E+01	4.452E+04	2.991E+00	1.485E+01	2.226E+04	1.496E+00
2093	5.263E+01	4.215E+04	2.832E+00	1.406E+01	2.107E+04	1.416E+00
2094	4.983E+01	3.990E+04	2.681E+00	1.331E+01	1.995E+04	1.340E+00
2095	4.717E+01	3.777E+04	2.538E+00	1.260E+01	1.889E+04	1.269E+00
2096	4.465E+01	3.576E+04	2.402E+00	1.193E+01	1.788E+04	1.201E+00
2097	4.227E+01	3.385E+04	2.274E+00	1.129E+01	1.693E+04	1.137E+00
2098	4.002E+01	3.204E+04	2.153E+00	1.069E+01	1.602E+04	1.077E+00

Results (Continued)

Year	Carbon dioxide			NMOC		
	(Mg/year)	*(m^3/year)*	*(av ft^3/min)*	*(Mg/year)*	*(m^3/year)*	*(av ft^3/min)*
1998	0	0	0	0	0	0
1999	1.138E+03	6.218E+05	4.178E+01	6.241E-01	1.741E+02	1.170E-02
2000	2.424E+03	1.324E+06	8.897E+01	1.329E+00	3.707E+02	2.491E-02
2001	3.511E+03	1.918E+06	1.289E+02	1.925E+00	5.371E+02	3.609E-02
2002	4.424E+03	2.417E+06	1.624E+02	2.426E+00	6.768E+02	4.547E-02
2003	5.349E+03	2.922E+06	1.963E+02	2.933E+00	8.181E+02	5.497E-02
2004	5.063E+03	2.766E+06	1.859E+02	2.776E+00	7.745E+02	5.204E-02
2005	4.793E+03	2.619E+06	1.759E+02	2.628E+00	7.332E+02	4.926E-02
2006	4.538E+03	2.479E+06	1.666E+02	2.488E+00	6.941E+02	4.664E-02
2007	4.296E+03	2.347E+06	1.577E+02	2.355E+00	6.571E+02	4.415E-02
2008	4.067E+03	2.222E+06	1.493E+02	2.230E+00	6.221E+02	4.180E-02
2009	3.850E+03	2.103E+06	1.413E+02	2.111E+00	5.889E+02	3.957E-02
2010	3.645E+03	1.991E+06	1.338E+02	1.998E+00	5.575E+02	3.746E-02
2011	3.450E+03	1.885E+06	1.266E+02	1.892E+00	5.278E+02	3.546E-02
2012	3.266E+03	1.784E+06	1.199E+02	1.791E+00	4.996E+02	3.357E-02
2013	3.092E+03	1.689E+06	1.135E+02	1.695E+00	4.730E+02	3.178E-02
2014	2.927E+03	1.599E+06	1.074E+02	1.605E+00	4.477E+02	3.008E-02
2015	2.771E+03	1.514E+06	1.017E+02	1.519E+00	4.239E+02	2.848E-02
2016	2.623E+03	1.433E+06	9.629E+01	1.438E+00	4.013E+02	2.696E-02
2017	2.483E+03	1.357E+06	9.115E+01	1.362E+00	3.799E+02	2.552E-02
2018	2.351E+03	1.284E+06	8.629E+01	1.289E+00	3.596E+02	2.416E-02
2019	2.226E+03	1.216E+06	8.169E+01	1.220E+00	3.404E+02	2.287E-02
2020	2.107E+03	1.151E+06	7.734E+01	1.155E+00	3.223E+02	2.165E-02
2021	1.995E+03	1.090E+06	7.321E+01	1.094E+00	3.051E+02	2.050E-02
2022	1.888E+03	1.032E+06	6.931E+01	1.035E+00	2.888E+02	1.941E-02
2023	1.788E+03	9.765E+05	6.561E+01	9.801E-01	2.734E+02	1.837E-02
2024	1.692E+03	9.244E+05	6.211E+01	9.278E-01	2.588E+02	1.739E-02
2025	1.602E+03	8.751E+05	5.880E+01	8.783E-01	2.450E+02	1.646E-02
2026	1.517E+03	8.285E+05	5.567E+01	8.315E-01	2.320E+02	1.559E-02
2027	1.436E+03	7.843E+05	5.270E+01	7.872E-01	2.196E+02	1.476E-02
2028	1.359E+03	7.425E+05	4.989E+01	7.452E-01	2.079E+02	1.397E-02
2029	1.287E+03	7.029E+05	4.723E+01	7.055E-01	1.968E+02	1.322E-02
2030	1.218E+03	6.654E+05	4.471E+01	6.678E-01	1.863E+02	1.252E-02
2031	1.153E+03	6.299E+05	4.232E+01	6.322E-01	1.764E+02	1.185E-02
2032	1.092E+03	5.963E+05	4.007E+01	5.985E-01	1.670E+02	1.122E-02
2033	1.033E+03	5.645E+05	3.793E+01	5.666E-01	1.581E+02	1.062E-02
2034	9.783E+02	5.344E+05	3.591E+01	5.364E-01	1.496E+02	1.005E-02
2035	9.261E+02	5.059E+05	3.399E+01	5.078E-01	1.417E+02	9.518E-03
2036	8.767E+02	4.789E+05	3.218E+01	4.807E-01	1.341E+02	9.011E-03
2037	8.300E+02	4.534E+05	3.046E+01	4.551E-01	1.270E+02	8.530E-03
2038	7.857E+02	4.292E+05	2.884E+01	4.308E-01	1.202E+02	8.075E-03
2039	7.438E+02	4.063E+05	2.730E+01	4.078E-01	1.138E+02	7.645E-03
2040	7.041E+02	3.847E+05	2.585E+01	3.861E-01	1.077E+02	7.237E-03
2041	6.666E+02	3.642E+05	2.447E+01	3.655E-01	1.020E+02	6.851E-03
2042	6.310E+02	3.447E+05	2.316E+01	3.460E-01	9.653E+01	6.486E-03
2043	5.974E+02	3.264E+05	2.193E+01	3.275E-01	9.138E+01	6.140E-03
2044	5.655E+02	3.090E+05	2.076E+01	3.101E-01	8.651E+01	5.812E-03
2045	5.354E+02	2.925E+05	1.965E+01	2.935E-01	8.189E+01	5.502E-03
2046	5.068E+02	2.769E+05	1.860E+01	2.779E-01	7.753E+01	5.209E-03
2047	4.798E+02	2.621E+05	1.761E+01	2.631E-01	7.339E+01	4.931E-03

Results (Continued)

Year	Carbon dioxide			NMOC		
	(Mg/year)	*(m^3/year)*	*(av ft^3/min)*	*(Mg/year)*	*(m^3/year)*	*(av ft^3/min)*
2048	4.542E+02	2.481E+05	1.667E+01	2.490E-01	6.948E+01	4.668E-03
2049	4.300E+02	2.349E+05	1.578E+01	2.358E-01	6.577E+01	4.419E-03
2050	4.071E+02	2.224E+05	1.494E+01	2.232E-01	6.227E+01	4.184E-03
2051	3.854E+02	2.105E+05	1.414E+01	2.113E-01	5.895E+01	3.961E-03
2052	3.648E+02	1.993E+05	1.339E+01	2.000E-01	5.580E+01	3.749E-03
2053	3.454E+02	1.887E+05	1.268E+01	1.894E-01	5.283E+01	3.549E-03
2054	3.269E+02	1.786E+05	1.200E+01	1.793E-01	5.001E+01	3.360E-03
2055	3.095E+02	1.691E+05	1.136E+01	1.697E-01	4.734E+01	3.181E-03
2056	2.930E+02	1.601E+05	1.075E+01	1.607E-01	4.482E+01	3.011E-03
2057	2.774E+02	1.515E+05	1.018E+01	1.521E-01	4.243E+01	2.851E-03
2058	2.626E+02	1.435E+05	9.638E+00	1.440E-01	4.017E+01	2.699E-03
2059	2.486E+02	1.358E+05	9.124E+00	1.363E-01	3.802E+01	2.555E-03
2060	2.353E+02	1.286E+05	8.638E+00	1.290E-01	3.600E+01	2.419E-03
2061	2.228E+02	1.217E+05	8.177E+00	1.221E-01	3.408E+01	2.290E-03
2062	2.109E+02	1.152E+05	7.741E+00	1.156E-01	3.226E+01	2.168E-03
2063	1.997E+02	1.091E+05	7.328E+00	1.095E-01	3.054E+01	2.052E-03
2064	1.890E+02	1.033E+05	6.938E+00	1.036E-01	2.891E+01	1.943E-03
2065	1.789E+02	9.775E+04	6.568E+00	9.810E-02	2.737E+01	1.839E-03
2066	1.694E+02	9.254E+04	6.217E+00	9.287E-02	2.591E+01	1.741E-03
2067	1.604E+02	8.760E+04	5.886E+00	8.792E-02	2.453E+01	1.648E-03
2068	1.518E+02	8.293E+04	5.572E+00	8.323E-02	2.322E+01	1.560E-03
2069	1.437E+02	7.851E+04	5.275E+00	7.879E-02	2.198E+01	1.477E-03
2070	1.360E+02	7.432E+04	4.994E+00	7.459E-02	2.081E+01	1.398E-03
2071	1.288E+02	7.036E+04	4.727E+00	7.061E-02	1.970E+01	1.324E-03
2072	1.219E+02	6.661E+04	4.475E+00	6.685E-02	1.865E+01	1.253E-03
2073	1.154E+02	6.305E+04	4.237E+00	6.328E-02	1.766E+01	1.186E-03
2074	1.093E+02	5.969E+04	4.011E+00	5.991E-02	1.671E+01	1.123E-03
2075	1.034E+02	5.651E+04	3.797E+00	5.671E-02	1.582E+01	1.063E-03
2076	9.792E+01	5.350E+04	3.594E+00	5.369E-02	1.498E+01	1.006E-03
2077	9.270E+01	5.064E+04	3.403E+00	5.083E-02	1.418E+01	9.527E-04
2078	8.776E+01	4.794E+04	3.221E+00	4.812E-02	1.342E+01	9.019E-04
2079	8.308E+01	4.539E+04	3.049E+00	4.555E-02	1.271E+01	8.538E-04
2080	7.865E+01	4.297E+04	2.887E+00	4.312E-02	1.203E+01	8.083E-04
2081	7.445E+01	4.067E+04	2.733E+00	4.082E-02	1.139E+01	7.652E-04
2082	7.048E+01	3.851E+04	2.587E+00	3.865E-02	1.078E+01	7.244E-04
2083	6.673E+01	3.645E+04	2.449E+00	3.658E-02	1.021E+01	6.858E-04
2084	6.317E+01	3.451E+04	2.319E+00	3.463E-02	9.662E+00	6.492E-04
2085	5.980E+01	3.267E+04	2.195E+00	3.279E-02	9.147E+00	6.146E-04
2086	5.661E+01	3.093E+04	2.078E+00	3.104E-02	8.659E+00	5.818E-04
2087	5.359E+01	2.928E+04	1.967E+00	2.938E-02	8.197E+00	5.508E-04
2088	5.073E+01	2.772E+04	1.862E+00	2.782E-02	7.760E+00	5.214E-04
2089	4.803E+01	2.624E+04	1.763E+00	2.633E-02	7.347E+00	4.936E-04
2090	4.547E+01	2.484E+04	1.669E+00	2.493E-02	6.955E+00	4.673E-04
2091	4.304E+01	2.351E+04	1.580E+00	2.360E-02	6.584E+00	4.424E-04
2092	4.075E+01	2.226E+04	1.496E+00	2.234E-02	6.233E+00	4.188E-04
2093	3.857E+01	2.107E+04	1.416E+00	2.115E-02	5.900E+00	3.965E-04
2094	3.652E+01	1.995E+04	1.340E+00	2.002E-02	5.586E+00	3.753E-04
2095	3.457E+01	1.889E+04	1.269E+00	1.895E-02	5.288E+00	3.553E-04
2096	3.273E+01	1.788E+04	1.201E+00	1.794E-02	5.006E+00	3.363E-04
2097	3.098E+01	1.693E+04	1.137E+00	1.699E-02	4.739E+00	3.184E-04
2098	2.933E+01	1.602E+04	1.077E+00	1.608E-02	4.486E+00	3.014E-04

Summary Report

Landfill Name or Identifier: MPW-Wayne Co. Unit 3 Phase 2

Date: Monday, June 14, 2010

Description/Comments:

About LandGEM:

First-Order Decomposition Rate Equation:

$$Q_{CH_4} = \sum_{i=1}^{n} \sum_{j=0.1}^{1} k L_o \left(\frac{M_i}{10} \right) e^{-k t_{ij}}$$

Where,

Q_{CH4} = annual methane generation in the year of the calculation ($m^3/year$)
i = 1-year time increment
n = (year of the calculation) - (initial year of waste acceptance)
j = 0.1-year time increment
k = methane generation rate ($year^{-1}$)
L_o = potential methane generation capacity (m^3/Mg)

M_i = mass of waste accepted in the ith year (Mg)
t_{ij} = age of the jth section of waste mass M_i accepted in the ith year (*decimal years*, e.g., 3.2 years)

LandGEM is based on a first-order decomposition rate equation for quantifying emissions from the decomposition of landfilled waste in municipal solid waste (MSW) landfills. The software provides a relatively simple approach to estimating landfill gas emissions. Model defaults are based on empirical data from U.S. landfills. Field test data can also be used in place of model defaults when available. Further guidance on EPA test methods, Clean Air Act (CAA) regulations, and other guidance regarding landfill gas emissions and control technology requirements can be found at http://www.epa.gov/ttnatw01/landfill/landflpg.html.

LandGEM is considered a screening tool — the better the input data, the better the estimates. Often, there are limitations with the available data regarding waste quantity and composition, variation in design and operating practices over time, and changes occurring over time that impact the emissions potential. Changes to landfill operation, such as operating under wet conditions through leachate recirculation or other liquid additions, will result in generating more gas at a faster rate. Defaults for estimating emissions for this type of operation are being developed to include in LandGEM along with defaults for convential landfills (no leachate or liquid additions) for developing emission inventories and determining CAA applicability. Refer to the Web site identified above for future updates.

Input Review

LANDFILL CHARACTERISTICS

Landfill Open Year	**2003**	
Landfill Closure Year (with 80-year limit)	**2011**	
Actual Closure Year (without limit)	***2011***	
Have Model Calculate Closure Year?	**No**	
Waste Design Capacity	**759,403**	*short tons*

MODEL PARAMETERS

Methane Generation Rate, k	**0.055**	*$year^{-1}$*
Potential Methane Generation Capacity, L_o	**147**	*m^3/Mg*
NMOC Concentration	**140**	*ppmv as hexane*
Methane Content	**50**	*% by volume*

GASES / POLLUTANTS SELECTED

Gas / Pollutant #1:	**Total landfill gas**
Gas / Pollutant #2:	**Methane**
Gas / Pollutant #3:	**Carbon dioxide**
Gas / Pollutant #4:	**NMOC**

WASTE ACCEPTANCE RATES

Year	Waste Accepted		Waste-In-Place	
	(Mg/year)	*(short tons/year)*	*(Mg)*	*(short tons)*
2003	83,520	91,872	0	0
2004	85,335	93,869	83,520	91,872
2005	84,282	92,710	168,855	185,741
2006	78,869	86,756	253,137	278,451
2007	74,869	82,356	332,006	365,207
2008	78,946	86,841	406,875	447,563
2009	81,818	90,000	485,822	534,404
2010	81,818	90,000	567,640	624,404
2011	40,909	45,000	649,458	714,404
2012	0	0	690,367	759,404
2013	0	0	690,367	759,404
2014	0	0	690,367	759,404
2015	0	0	690,367	759,404
2016	0	0	690,367	759,404
2017	0	0	690,367	759,404
2018	0	0	690,367	759,404
2019	0	0	690,367	759,404
2020	0	0	690,367	759,404
2021	0	0	690,367	759,404
2022	0	0	690,367	759,404
2023	0	0	690,367	759,404
2024	0	0	690,367	759,404
2025	0	0	690,367	759,404
2026	0	0	690,367	759,404
2027	0	0	690,367	759,404
2028	0	0	690,367	759,404
2029	0	0	690,367	759,404
2030	0	0	690,367	759,404
2031	0	0	690,367	759,404
2032	0	0	690,367	759,404
2033	0	0	690,367	759,404
2034	0	0	690,367	759,404
2035	0	0	690,367	759,404
2036	0	0	690,367	759,404
2037	0	0	690,367	759,404
2038	0	0	690,367	759,404
2039	0	0	690,367	759,404
2040	0	0	690,367	759,404
2041	0	0	690,367	759,404
2042	0	0	690,367	759,404

Pollutant Parameters

		Gas / Pollutant Default Parameters:		User-specified Pollutant Parameters:	
	Compound	Concentration (*ppmv*)	Molecular Weight	Concentration (*ppmv*)	Molecular Weight
Gases	Total landfill gas		0.00		
	Methane		16.04		
	Carbon dioxide		44.01		
	NMOC	4,000	86.18		
Pollutants	1,1,1-Trichloroethane (methyl chloroform) - HAP	0.48	133.41		
	1,1,2,2-Tetrachloroethane - HAP/VOC	1.1	167.85		
	1,1-Dichloroethane (ethylidene dichloride) - HAP/VOC	2.4	98.97		
	1,1-Dichloroethene (vinylidene chloride) - HAP/VOC	0.20	96.94		
	1,2-Dichloroethane (ethylene dichloride) - HAP/VOC	0.41	98.96		
	1,2-Dichloropropane (propylene dichloride) - HAP/VOC	0.18	112.99		
	2-Propanol (isopropyl alcohol) - VOC	50	60.11		
	Acetone	7.0	58.08		
	Acrylonitrile - HAP/VOC	6.3	53.06		
	Benzene - No or Unknown Co-disposal - HAP/VOC	1.9	78.11		
	Benzene - Co-disposal - HAP/VOC	11	78.11		
	Bromodichloromethane - VOC	3.1	163.83		
	Butane - VOC	5.0	58.12		
	Carbon disulfide - HAP/VOC	0.58	76.13		
	Carbon monoxide	140	28.01		
	Carbon tetrachloride - HAP/VOC	4.0E-03	153.84		
	Carbonyl sulfide - HAP/VOC	0.49	60.07		
	Chlorobenzene - HAP/VOC	0.25	112.56		
	Chlorodifluoromethane	1.3	86.47		
	Chloroethane (ethyl chloride) - HAP/VOC	1.3	64.52		
	Chloroform - HAP/VOC	0.03	119.39		
	Chloromethane - VOC	1.2	50.49		
	Dichlorobenzene - (HAP for para isomer/VOC)	0.21	147		
	Dichlorodifluoromethane	16	120.91		
	Dichlorofluoromethane - VOC	2.6	102.92		
	Dichloromethane (methylene chloride) - HAP	14	84.94		
	Dimethyl sulfide (methyl sulfide) - VOC	7.8	62.13		
	Ethane	890	30.07		
	Ethanol - VOC	27	46.08		

Pollutant Parameters (Continued)

	Compound	Gas / Pollutant Default Parameters: Concentration (*ppmv*)	Molecular Weight	User-specified Pollutant Parameters: Concentration (*ppmv*)	Molecular Weight
Pollutants	Ethyl mercaptan (ethanethiol) - VOC	2.3	62.13		
	Ethylbenzene - HAP/VOC	4.6	106.16		
	Ethylene dibromide - HAP/VOC	1.0E-03	187.88		
	Fluorotrichloromethane - VOC	0.76	137.38		
	Hexane - HAP/VOC	6.6	86.18		
	Hydrogen sulfide	36	34.08		
	Mercury (total) - HAP	2.9E-04	200.61		
	Methyl ethyl ketone - HAP/VOC	7.1	72.11		
	Methyl isobutyl ketone - HAP/VOC	1.9	100.16		
	Methyl mercaptan - VOC	2.5	48.11		
	Pentane - VOC	3.3	72.15		
	Perchloroethylene (tetrachloroethylene) - HAP	3.7	165.83		
	Propane - VOC	11	44.09		
	t-1,2-Dichloroethene - VOC	2.8	96.94		
	Toluene - No or Unknown Co-disposal - HAP/VOC	39	92.13		
	Toluene - Co-disposal - HAP/VOC	170	92.13		
	Trichloroethylene (trichloroethene) - HAP/VOC	2.8	131.40		
	Vinyl chloride - HAP/VOC	7.3	62.50		
	Xylenes - HAP/VOC	12	106.16		

Results

Year	Total landfill gas			Methane		
	(Mg/year)	*(m^3/year)*	*(av ft^3/min)*	*(Mg/year)*	*(m^3/year)*	*(av ft^3/min)*
2003	0	0	0	0	0	0
2004	1.646E+03	1.318E+06	8.853E+01	4.395E+02	6.588E+05	4.427E+01
2005	3.239E+03	2.593E+06	1.743E+02	8.651E+02	1.297E+06	8.713E+01
2006	4.726E+03	3.784E+06	2.543E+02	1.262E+03	1.892E+06	1.271E+02
2007	6.027E+03	4.826E+06	3.243E+02	1.610E+03	2.413E+06	1.621E+02
2008	7.180E+03	5.749E+06	3.863E+02	1.918E+03	2.875E+06	1.931E+02
2009	8.351E+03	6.687E+06	4.493E+02	2.231E+03	3.343E+06	2.246E+02
2010	9.516E+03	7.620E+06	5.120E+02	2.542E+03	3.810E+06	2.560E+02
2011	1.062E+04	8.503E+06	5.713E+02	2.836E+03	4.251E+06	2.857E+02
2012	1.086E+04	8.693E+06	5.841E+02	2.900E+03	4.347E+06	2.921E+02
2013	1.028E+04	8.228E+06	5.528E+02	2.745E+03	4.114E+06	2.764E+02
2014	9.726E+03	7.788E+06	5.233E+02	2.598E+03	3.894E+06	2.616E+02
2015	9.205E+03	7.371E+06	4.953E+02	2.459E+03	3.685E+06	2.476E+02
2016	8.712E+03	6.977E+06	4.688E+02	2.327E+03	3.488E+06	2.344E+02
2017	8.246E+03	6.603E+06	4.437E+02	2.203E+03	3.302E+06	2.218E+02
2018	7.805E+03	6.250E+06	4.199E+02	2.085E+03	3.125E+06	2.100E+02
2019	7.387E+03	5.915E+06	3.975E+02	1.973E+03	2.958E+06	1.987E+02
2020	6.992E+03	5.599E+06	3.762E+02	1.868E+03	2.799E+06	1.881E+02
2021	6.618E+03	5.299E+06	3.561E+02	1.768E+03	2.650E+06	1.780E+02
2022	6.264E+03	5.016E+06	3.370E+02	1.673E+03	2.508E+06	1.685E+02
2023	5.928E+03	4.747E+06	3.190E+02	1.584E+03	2.374E+06	1.595E+02
2024	5.611E+03	4.493E+06	3.019E+02	1.499E+03	2.247E+06	1.509E+02
2025	5.311E+03	4.253E+06	2.857E+02	1.419E+03	2.126E+06	1.429E+02
2026	5.027E+03	4.025E+06	2.704E+02	1.343E+03	2.013E+06	1.352E+02
2027	4.758E+03	3.810E+06	2.560E+02	1.271E+03	1.905E+06	1.280E+02
2028	4.503E+03	3.606E+06	2.423E+02	1.203E+03	1.803E+06	1.211E+02
2029	4.262E+03	3.413E+06	2.293E+02	1.138E+03	1.706E+06	1.147E+02
2030	4.034E+03	3.230E+06	2.170E+02	1.078E+03	1.615E+06	1.085E+02
2031	3.818E+03	3.057E+06	2.054E+02	1.020E+03	1.529E+06	1.027E+02
2032	3.614E+03	2.894E+06	1.944E+02	9.653E+02	1.447E+06	9.722E+01
2033	3.420E+03	2.739E+06	1.840E+02	9.136E+02	1.369E+06	9.201E+01
2034	3.237E+03	2.592E+06	1.742E+02	8.647E+02	1.296E+06	8.709E+01
2035	3.064E+03	2.454E+06	1.649E+02	8.185E+02	1.227E+06	8.243E+01
2036	2.900E+03	2.322E+06	1.560E+02	7.747E+02	1.161E+06	7.802E+01
2037	2.745E+03	2.198E+06	1.477E+02	7.332E+02	1.099E+06	7.384E+01
2038	2.598E+03	2.080E+06	1.398E+02	6.940E+02	1.040E+06	6.989E+01
2039	2.459E+03	1.969E+06	1.323E+02	6.568E+02	9.845E+05	6.615E+01
2040	2.327E+03	1.864E+06	1.252E+02	6.217E+02	9.318E+05	6.261E+01
2041	2.203E+03	1.764E+06	1.185E+02	5.884E+02	8.820E+05	5.926E+01
2042	2.085E+03	1.670E+06	1.122E+02	5.569E+02	8.348E+05	5.609E+01
2043	1.973E+03	1.580E+06	1.062E+02	5.271E+02	7.901E+05	5.309E+01
2044	1.868E+03	1.496E+06	1.005E+02	4.989E+02	7.478E+05	5.025E+01
2045	1.768E+03	1.416E+06	9.511E+01	4.722E+02	7.078E+05	4.756E+01
2046	1.673E+03	1.340E+06	9.002E+01	4.469E+02	6.699E+05	4.501E+01
2047	1.584E+03	1.268E+06	8.521E+01	4.230E+02	6.341E+05	4.260E+01
2048	1.499E+03	1.200E+06	8.065E+01	4.004E+02	6.001E+05	4.032E+01
2049	1.419E+03	1.136E+06	7.633E+01	3.790E+02	5.680E+05	3.817E+01
2050	1.343E+03	1.075E+06	7.225E+01	3.587E+02	5.376E+05	3.612E+01
2051	1.271E+03	1.018E+06	6.838E+01	3.395E+02	5.089E+05	3.419E+01
2052	1.203E+03	9.632E+05	6.472E+01	3.213E+02	4.816E+05	3.236E+01

Results (Continued)

Year	Total landfill gas			Methane		
	(Mg/year)	*(m^3/year)*	*(av ft^3/min)*	*(Mg/year)*	*(m^3/year)*	*(av ft^3/min)*
2053	1.139E+03	9.117E+05	6.126E+01	3.041E+02	4.558E+05	3.063E+01
2054	1.078E+03	8.629E+05	5.798E+01	2.878E+02	4.315E+05	2.899E+01
2055	1.020E+03	8.167E+05	5.488E+01	2.724E+02	4.084E+05	2.744E+01
2056	9.654E+02	7.730E+05	5.194E+01	2.579E+02	3.865E+05	2.597E+01
2057	9.137E+02	7.317E+05	4.916E+01	2.441E+02	3.658E+05	2.458E+01
2058	8.648E+02	6.925E+05	4.653E+01	2.310E+02	3.462E+05	2.326E+01
2059	8.185E+02	6.554E+05	4.404E+01	2.186E+02	3.277E+05	2.202E+01
2060	7.747E+02	6.204E+05	4.168E+01	2.069E+02	3.102E+05	2.084E+01
2061	7.333E+02	5.872E+05	3.945E+01	1.959E+02	2.936E+05	1.973E+01
2062	6.940E+02	5.557E+05	3.734E+01	1.854E+02	2.779E+05	1.867E+01
2063	6.569E+02	5.260E+05	3.534E+01	1.755E+02	2.630E+05	1.767E+01
2064	6.217E+02	4.979E+05	3.345E+01	1.661E+02	2.489E+05	1.673E+01
2065	5.885E+02	4.712E+05	3.166E+01	1.572E+02	2.356E+05	1.583E+01
2066	5.570E+02	4.460E+05	2.997E+01	1.488E+02	2.230E+05	1.498E+01
2067	5.272E+02	4.221E+05	2.836E+01	1.408E+02	2.111E+05	1.418E+01
2068	4.990E+02	3.995E+05	2.684E+01	1.333E+02	1.998E+05	1.342E+01
2069	4.723E+02	3.782E+05	2.541E+01	1.261E+02	1.891E+05	1.270E+01
2070	4.470E+02	3.579E+05	2.405E+01	1.194E+02	1.790E+05	1.202E+01
2071	4.231E+02	3.388E+05	2.276E+01	1.130E+02	1.694E+05	1.138E+01
2072	4.004E+02	3.206E+05	2.154E+01	1.070E+02	1.603E+05	1.077E+01
2073	3.790E+02	3.035E+05	2.039E+01	1.012E+02	1.517E+05	1.020E+01
2074	3.587E+02	2.872E+05	1.930E+01	9.581E+01	1.436E+05	9.650E+00
2075	3.395E+02	2.719E+05	1.827E+01	9.069E+01	1.359E+05	9.133E+00
2076	3.213E+02	2.573E+05	1.729E+01	8.583E+01	1.287E+05	8.645E+00
2077	3.041E+02	2.435E+05	1.636E+01	8.124E+01	1.218E+05	8.182E+00
2078	2.879E+02	2.305E+05	1.549E+01	7.689E+01	1.153E+05	7.744E+00
2079	2.725E+02	2.182E+05	1.466E+01	7.278E+01	1.091E+05	7.330E+00
2080	2.579E+02	2.065E+05	1.387E+01	6.888E+01	1.033E+05	6.937E+00
2081	2.441E+02	1.955E+05	1.313E+01	6.520E+01	9.773E+04	6.566E+00
2082	2.310E+02	1.850E+05	1.243E+01	6.171E+01	9.250E+04	6.215E+00
2083	2.187E+02	1.751E+05	1.176E+01	5.841E+01	8.755E+04	5.882E+00
2084	2.070E+02	1.657E+05	1.113E+01	5.528E+01	8.286E+04	5.567E+00
2085	1.959E+02	1.569E+05	1.054E+01	5.232E+01	7.843E+04	5.269E+00
2086	1.854E+02	1.485E+05	9.975E+00	4.952E+01	7.423E+04	4.987E+00
2087	1.755E+02	1.405E+05	9.441E+00	4.687E+01	7.026E+04	4.721E+00
2088	1.661E+02	1.330E+05	8.936E+00	4.436E+01	6.650E+04	4.468E+00
2089	1.572E+02	1.259E+05	8.458E+00	4.199E+01	6.294E+04	4.229E+00
2090	1.488E+02	1.191E+05	8.005E+00	3.974E+01	5.957E+04	4.003E+00
2091	1.408E+02	1.128E+05	7.577E+00	3.762E+01	5.638E+04	3.788E+00
2092	1.333E+02	1.067E+05	7.171E+00	3.560E+01	5.337E+04	3.586E+00
2093	1.262E+02	1.010E+05	6.787E+00	3.370E+01	5.051E+04	3.394E+00
2094	1.194E+02	9.561E+04	6.424E+00	3.189E+01	4.781E+04	3.212E+00
2095	1.130E+02	9.050E+04	6.080E+00	3.019E+01	4.525E+04	3.040E+00
2096	1.070E+02	8.565E+04	5.755E+00	2.857E+01	4.283E+04	2.878E+00
2097	1.012E+02	8.107E+04	5.447E+00	2.704E+01	4.053E+04	2.724E+00
2098	9.582E+01	7.673E+04	5.156E+00	2.560E+01	3.837E+04	2.578E+00
2099	9.070E+01	7.262E+04	4.880E+00	2.423E+01	3.631E+04	2.440E+00
2100	8.584E+01	6.874E+04	4.619E+00	2.293E+01	3.437E+04	2.309E+00
2101	8.125E+01	6.506E+04	4.371E+00	2.170E+01	3.253E+04	2.186E+00
2102	7.690E+01	6.158E+04	4.137E+00	2.054E+01	3.079E+04	2.069E+00
2103	7.278E+01	5.828E+04	3.916E+00	1.944E+01	2.914E+04	1.958E+00

Results (Continued)

Year	Carbon dioxide			NMOC		
	(Mg/year)	*(m^3/year)*	*(av ft^3/min)*	*(Mg/year)*	*(m^3/year)*	*(av ft^3/min)*
2003	0	0	0	0	0	0
2004	1.206E+03	6.588E+05	4.427E+01	6.612E-01	1.845E+02	1.239E-02
2005	2.374E+03	1.297E+06	8.713E+01	1.301E+00	3.631E+02	2.440E-02
2006	3.464E+03	1.892E+06	1.271E+02	1.899E+00	5.298E+02	3.560E-02
2007	4.417E+03	2.413E+06	1.621E+02	2.422E+00	6.757E+02	4.540E-02
2008	5.262E+03	2.875E+06	1.931E+02	2.885E+00	8.049E+02	5.408E-02
2009	6.120E+03	3.343E+06	2.246E+02	3.356E+00	9.362E+02	6.290E-02
2010	6.974E+03	3.810E+06	2.560E+02	3.824E+00	1.067E+03	7.168E-02
2011	7.782E+03	4.251E+06	2.857E+02	4.267E+00	1.190E+03	7.998E-02
2012	7.957E+03	4.347E+06	2.921E+02	4.363E+00	1.217E+03	8.177E-02
2013	7.531E+03	4.114E+06	2.764E+02	4.129E+00	1.152E+03	7.740E-02
2014	7.128E+03	3.894E+06	2.616E+02	3.908E+00	1.090E+03	7.326E-02
2015	6.746E+03	3.685E+06	2.476E+02	3.699E+00	1.032E+03	6.934E-02
2016	6.385E+03	3.488E+06	2.344E+02	3.501E+00	9.767E+02	6.563E-02
2017	6.044E+03	3.302E+06	2.218E+02	3.314E+00	9.244E+02	6.211E-02
2018	5.720E+03	3.125E+06	2.100E+02	3.136E+00	8.750E+02	5.879E-02
2019	5.414E+03	2.958E+06	1.987E+02	2.968E+00	8.281E+02	5.564E-02
2020	5.124E+03	2.799E+06	1.881E+02	2.810E+00	7.838E+02	5.267E-02
2021	4.850E+03	2.650E+06	1.780E+02	2.659E+00	7.419E+02	4.985E-02
2022	4.591E+03	2.508E+06	1.685E+02	2.517E+00	7.022E+02	4.718E-02
2023	4.345E+03	2.374E+06	1.595E+02	2.382E+00	6.646E+02	4.465E-02
2024	4.112E+03	2.247E+06	1.509E+02	2.255E+00	6.290E+02	4.227E-02
2025	3.892E+03	2.126E+06	1.429E+02	2.134E+00	5.954E+02	4.000E-02
2026	3.684E+03	2.013E+06	1.352E+02	2.020E+00	5.635E+02	3.786E-02
2027	3.487E+03	1.905E+06	1.280E+02	1.912E+00	5.334E+02	3.584E-02
2028	3.300E+03	1.803E+06	1.211E+02	1.809E+00	5.048E+02	3.392E-02
2029	3.124E+03	1.706E+06	1.147E+02	1.713E+00	4.778E+02	3.210E-02
2030	2.956E+03	1.615E+06	1.085E+02	1.621E+00	4.522E+02	3.039E-02
2031	2.798E+03	1.529E+06	1.027E+02	1.534E+00	4.280E+02	2.876E-02
2032	2.648E+03	1.447E+06	9.722E+01	1.452E+00	4.051E+02	2.722E-02
2033	2.507E+03	1.369E+06	9.201E+01	1.374E+00	3.834E+02	2.576E-02
2034	2.373E+03	1.296E+06	8.709E+01	1.301E+00	3.629E+02	2.438E-02
2035	2.246E+03	1.227E+06	8.243E+01	1.231E+00	3.435E+02	2.308E-02
2036	2.125E+03	1.161E+06	7.802E+01	1.165E+00	3.251E+02	2.184E-02
2037	2.012E+03	1.099E+06	7.384E+01	1.103E+00	3.077E+02	2.068E-02
2038	1.904E+03	1.040E+06	6.989E+01	1.044E+00	2.913E+02	1.957E-02
2039	1.802E+03	9.845E+05	6.615E+01	9.881E-01	2.757E+02	1.852E-02
2040	1.706E+03	9.318E+05	6.261E+01	9.352E-01	2.609E+02	1.753E-02
2041	1.614E+03	8.820E+05	5.926E+01	8.852E-01	2.470E+02	1.659E-02
2042	1.528E+03	8.348E+05	5.609E+01	8.378E-01	2.337E+02	1.570E-02
2043	1.446E+03	7.901E+05	5.309E+01	7.930E-01	2.212E+02	1.486E-02
2044	1.369E+03	7.478E+05	5.025E+01	7.505E-01	2.094E+02	1.407E-02
2045	1.296E+03	7.078E+05	4.756E+01	7.104E-01	1.982E+02	1.332E-02
2046	1.226E+03	6.699E+05	4.501E+01	6.724E-01	1.876E+02	1.260E-02
2047	1.161E+03	6.341E+05	4.260E+01	6.364E-01	1.775E+02	1.193E-02
2048	1.099E+03	6.001E+05	4.032E+01	6.023E-01	1.680E+02	1.129E-02
2049	1.040E+03	5.680E+05	3.817E+01	5.701E-01	1.590E+02	1.069E-02
2050	9.841E+02	5.376E+05	3.612E+01	5.396E-01	1.505E+02	1.011E-02
2051	9.315E+02	5.089E+05	3.419E+01	5.107E-01	1.425E+02	9.573E-03
2052	8.816E+02	4.816E+05	3.236E+01	4.834E-01	1.349E+02	9.061E-03

Results (Continued)

Year	Carbon dioxide			NMOC		
	(Mg/year)	*(m^3/year)*	*(av ft^3/min)*	*(Mg/year)*	*(m^3/year)*	*(av ft^3/min)*
2053	8.344E+02	4.558E+05	3.063E+01	4.575E-01	1.276E+02	8.576E-03
2054	7.898E+02	4.315E+05	2.899E+01	4.330E-01	1.208E+02	8.117E-03
2055	7.475E+02	4.084E+05	2.744E+01	4.099E-01	1.143E+02	7.683E-03
2056	7.075E+02	3.865E+05	2.597E+01	3.879E-01	1.082E+02	7.271E-03
2057	6.696E+02	3.658E+05	2.458E+01	3.672E-01	1.024E+02	6.882E-03
2058	6.338E+02	3.462E+05	2.326E+01	3.475E-01	9.695E+01	6.514E-03
2059	5.999E+02	3.277E+05	2.202E+01	3.289E-01	9.176E+01	6.165E-03
2060	5.678E+02	3.102E+05	2.084E+01	3.113E-01	8.685E+01	5.836E-03
2061	5.374E+02	2.936E+05	1.973E+01	2.947E-01	8.220E+01	5.523E-03
2062	5.086E+02	2.779E+05	1.867E+01	2.789E-01	7.780E+01	5.228E-03
2063	4.814E+02	2.630E+05	1.767E+01	2.640E-01	7.364E+01	4.948E-03
2064	4.557E+02	2.489E+05	1.673E+01	2.498E-01	6.970E+01	4.683E-03
2065	4.313E+02	2.356E+05	1.583E+01	2.365E-01	6.597E+01	4.432E-03
2066	4.082E+02	2.230E+05	1.498E+01	2.238E-01	6.244E+01	4.195E-03
2067	3.864E+02	2.111E+05	1.418E+01	2.118E-01	5.910E+01	3.971E-03
2068	3.657E+02	1.998E+05	1.342E+01	2.005E-01	5.594E+01	3.758E-03
2069	3.461E+02	1.891E+05	1.270E+01	1.898E-01	5.294E+01	3.557E-03
2070	3.276E+02	1.790E+05	1.202E+01	1.796E-01	5.011E+01	3.367E-03
2071	3.101E+02	1.694E+05	1.138E+01	1.700E-01	4.743E+01	3.187E-03
2072	2.935E+02	1.603E+05	1.077E+01	1.609E-01	4.489E+01	3.016E-03
2073	2.778E+02	1.517E+05	1.020E+01	1.523E-01	4.249E+01	2.855E-03
2074	2.629E+02	1.436E+05	9.650E+00	1.441E-01	4.021E+01	2.702E-03
2075	2.488E+02	1.359E+05	9.133E+00	1.364E-01	3.806E+01	2.557E-03
2076	2.355E+02	1.287E+05	8.645E+00	1.291E-01	3.602E+01	2.420E-03
2077	2.229E+02	1.218E+05	8.182E+00	1.222E-01	3.410E+01	2.291E-03
2078	2.110E+02	1.153E+05	7.744E+00	1.157E-01	3.227E+01	2.168E-03
2079	1.997E+02	1.091E+05	7.330E+00	1.095E-01	3.054E+01	2.052E-03
2080	1.890E+02	1.033E+05	6.937E+00	1.036E-01	2.891E+01	1.942E-03
2081	1.789E+02	9.773E+04	6.566E+00	9.808E-02	2.736E+01	1.839E-03
2082	1.693E+02	9.250E+04	6.215E+00	9.283E-02	2.590E+01	1.740E-03
2083	1.603E+02	8.755E+04	5.882E+00	8.787E-02	2.451E+01	1.647E-03
2084	1.517E+02	8.286E+04	5.567E+00	8.316E-02	2.320E+01	1.559E-03
2085	1.436E+02	7.843E+04	5.269E+00	7.871E-02	2.196E+01	1.475E-03
2086	1.359E+02	7.423E+04	4.987E+00	7.450E-02	2.078E+01	1.396E-03
2087	1.286E+02	7.026E+04	4.721E+00	7.051E-02	1.967E+01	1.322E-03
2088	1.217E+02	6.650E+04	4.468E+00	6.674E-02	1.862E+01	1.251E-03
2089	1.152E+02	6.294E+04	4.229E+00	6.317E-02	1.762E+01	1.184E-03
2090	1.090E+02	5.957E+04	4.003E+00	5.979E-02	1.668E+01	1.121E-03
2091	1.032E+02	5.638E+04	3.788E+00	5.659E-02	1.579E+01	1.061E-03
2092	9.768E+01	5.337E+04	3.586E+00	5.356E-02	1.494E+01	1.004E-03
2093	9.246E+01	5.051E+04	3.394E+00	5.069E-02	1.414E+01	9.502E-04
2094	8.751E+01	4.781E+04	3.212E+00	4.798E-02	1.339E+01	8.994E-04
2095	8.283E+01	4.525E+04	3.040E+00	4.541E-02	1.267E+01	8.513E-04
2096	7.839E+01	4.283E+04	2.878E+00	4.298E-02	1.199E+01	8.057E-04
2097	7.420E+01	4.053E+04	2.724E+00	4.068E-02	1.135E+01	7.626E-04
2098	7.023E+01	3.837E+04	2.578E+00	3.851E-02	1.074E+01	7.218E-04
2099	6.647E+01	3.631E+04	2.440E+00	3.644E-02	1.017E+01	6.832E-04
2100	6.291E+01	3.437E+04	2.309E+00	3.449E-02	9.623E+00	6.466E-04
2101	5.955E+01	3.253E+04	2.186E+00	3.265E-02	9.108E+00	6.120E-04
2102	5.636E+01	3.079E+04	2.069E+00	3.090E-02	8.621E+00	5.792E-04
2103	5.334E+01	2.914E+04	1.958E+00	2.925E-02	8.160E+00	5.482E-04

Summary Report

Landfill Name or Identifier: MPW-Wayne Co. Unit 3 Phase 3

Date: Monday, June 14, 2010

Description/Comments:

About LandGEM:

First-Order Decomposition Rate Equation:

$$Q_{CH_4} = \sum_{i=1}^{n} \sum_{j=0.1}^{1} k L_o \left(\frac{M_i}{10} \right) e^{-k t_{ij}}$$

Where,

Q_{CH4} = annual methane generation in the year of the calculation (*m^3/year*)
i = 1-year time increment
n = (year of the calculation) - (initial year of waste acceptance)
j = 0.1-year time increment
k = methane generation rate (*$year^{-1}$*)
L_o = potential methane generation capacity (*m^3/Mg*)

M_i = mass of waste accepted in the ith year (*Mg*)
t_{ij} = age of the jth section of waste mass M_i accepted in the ith year (*decimal years*, e.g., 3.2 years)

LandGEM is based on a first-order decomposition rate equation for quantifying emissions from the decomposition of landfilled waste in municipal solid waste (MSW) landfills. The software provides a relatively simple approach to estimating landfill gas emissions. Model defaults are based on empirical data from U.S. landfills. Field test data can also be used in place of model defaults when available. Further guidance on EPA test methods, Clean Air Act (CAA) regulations, and other guidance regarding landfill gas emissions and control technology requirements can be found at http://www.epa.gov/ttnatw01/landfill/landflpg.html.

LandGEM is considered a screening tool — the better the input data, the better the estimates. Often, there are limitations with the available data regarding waste quantity and composition, variation in design and operating practices over time, and changes occurring over time that impact the emissions potential. Changes to landfill operation, such as operating under wet conditions through leachate recirculation or other liquid additions, will result in generating more gas at a faster rate. Defaults for estimating emissions for this type of operation are being developed to include in LandGEM along with defaults for convential landfills (no leachate or liquid additions) for developing emission inventories and determining CAA applicability. Refer to the Web site identified above for future updates.

Input Review

LANDFILL CHARACTERISTICS

Landfill Open Year	**2011**	
Landfill Closure Year (with 80-year limit)	**2031**	
Actual Closure Year (without limit)	***2031***	
Have Model Calculate Closure Year?	**Yes**	
Waste Design Capacity	**1,834,824**	*short tons*

MODEL PARAMETERS

Methane Generation Rate, k	**0.055**	*year^{-1}*
Potential Methane Generation Capacity, L_o	**147**	*m^3/Mg*
NMOC Concentration	**140**	*ppmv as hexane*
Methane Content	**50**	*% by volume*

GASES / POLLUTANTS SELECTED

Gas / Pollutant #1:	**Total landfill gas**
Gas / Pollutant #2:	**Methane**
Gas / Pollutant #3:	**Carbon dioxide**
Gas / Pollutant #4:	**NMOC**

WASTE ACCEPTANCE RATES

Year	Waste Accepted		Waste-In-Place	
	(Mg/year)	*(short tons/year)*	*(Mg)*	*(short tons)*
2011	40,909	45,000	0	0
2012	81,818	90,000	40,909	45,000
2013	81,818	90,000	122,727	135,000
2014	81,818	90,000	204,545	225,000
2015	81,818	90,000	286,364	315,000
2016	81,818	90,000	368,182	405,000
2017	81,818	90,000	450,000	495,000
2018	81,818	90,000	531,818	585,000
2019	81,818	90,000	613,636	675,000
2020	81,818	90,000	695,455	765,000
2021	81,818	90,000	777,273	855,000
2022	81,818	90,000	859,091	945,000
2023	81,818	90,000	940,909	1,035,000
2024	81,818	90,000	1,022,727	1,125,000
2025	81,818	90,000	1,104,545	1,215,000
2026	81,818	90,000	1,186,364	1,305,000
2027	81,818	90,000	1,268,182	1,395,000
2028	81,818	90,000	1,350,000	1,485,000
2029	81,818	90,000	1,431,818	1,575,000
2030	81,818	90,000	1,513,636	1,665,000
2031	72,567	79,824	1,595,455	1,755,000
2032	0	0	1,668,022	1,834,824
2033	0	0	1,668,022	1,834,824
2034	0	0	1,668,022	1,834,824
2035	0	0	1,668,022	1,834,824
2036	0	0	1,668,022	1,834,824
2037	0	0	1,668,022	1,834,824
2038	0	0	1,668,022	1,834,824
2039	0	0	1,668,022	1,834,824
2040	0	0	1,668,022	1,834,824
2041	0	0	1,668,022	1,834,824
2042	0	0	1,668,022	1,834,824
2043	0	0	1,668,022	1,834,824
2044	0	0	1,668,022	1,834,824
2045	0	0	1,668,022	1,834,824
2046	0	0	1,668,022	1,834,824
2047	0	0	1,668,022	1,834,824
2048	0	0	1,668,022	1,834,824
2049	0	0	1,668,022	1,834,824
2050	0	0	1,668,022	1,834,824

Pollutant Parameters

		Gas / Pollutant Default Parameters:		User-specified Pollutant Parameters:	
	Compound	Concentration (*ppmv*)	Molecular Weight	Concentration (*ppmv*)	Molecular Weight
Gases	Total landfill gas		0.00		
	Methane		16.04		
	Carbon dioxide		44.01		
	NMOC	4,000	86.18		
Pollutants	1,1,1-Trichloroethane (methyl chloroform) - HAP	0.48	133.41		
	1,1,2,2-Tetrachloroethane - HAP/VOC	1.1	167.85		
	1,1-Dichloroethane (ethylidene dichloride) - HAP/VOC	2.4	98.97		
	1,1-Dichloroethene (vinylidene chloride) - HAP/VOC	0.20	96.94		
	1,2-Dichloroethane (ethylene dichloride) - HAP/VOC	0.41	98.96		
	1,2-Dichloropropane (propylene dichloride) - HAP/VOC	0.18	112.99		
	2-Propanol (isopropyl alcohol) - VOC	50	60.11		
	Acetone	7.0	58.08		
	Acrylonitrile - HAP/VOC	6.3	53.06		
	Benzene - No or Unknown Co-disposal - HAP/VOC	1.9	78.11		
	Benzene - Co-disposal - HAP/VOC	11	78.11		
	Bromodichloromethane - VOC	3.1	163.83		
	Butane - VOC	5.0	58.12		
	Carbon disulfide - HAP/VOC	0.58	76.13		
	Carbon monoxide	140	28.01		
	Carbon tetrachloride - HAP/VOC	4.0E-03	153.84		
	Carbonyl sulfide - HAP/VOC	0.49	60.07		
	Chlorobenzene - HAP/VOC	0.25	112.56		
	Chlorodifluoromethane	1.3	86.47		
	Chloroethane (ethyl chloride) - HAP/VOC	1.3	64.52		
	Chloroform - HAP/VOC	0.03	119.39		
	Chloromethane - VOC	1.2	50.49		
	Dichlorobenzene - (HAP for para isomer/VOC)	0.21	147		
	Dichlorodifluoromethane	16	120.91		
	Dichlorofluoromethane - VOC	2.6	102.92		
	Dichloromethane (methylene chloride) - HAP	14	84.94		
	Dimethyl sulfide (methyl sulfide) - VOC	7.8	62.13		
	Ethane	890	30.07		
	Ethanol - VOC	27	46.08		

Pollutant Parameters (Continued)

	Compound	Gas / Pollutant Default Parameters: Concentration (*ppmv*)	Molecular Weight	User-specified Pollutant Parameters: Concentration (*ppmv*)	Molecular Weight
Pollutants	Ethyl mercaptan (ethanethiol) - VOC	2.3	62.13		
	Ethylbenzene - HAP/VOC	4.6	106.16		
	Ethylene dibromide - HAP/VOC	1.0E-03	187.88		
	Fluorotrichloromethane - VOC	0.76	137.38		
	Hexane - HAP/VOC	6.6	86.18		
	Hydrogen sulfide	36	34.08		
	Mercury (total) - HAP	2.9E-04	200.61		
	Methyl ethyl ketone - HAP/VOC	7.1	72.11		
	Methyl isobutyl ketone - HAP/VOC	1.9	100.16		
	Methyl mercaptan - VOC	2.5	48.11		
	Pentane - VOC	3.3	72.15		
	Perchloroethylene (tetrachloroethylene) - HAP	3.7	165.83		
	Propane - VOC	11	44.09		
	t-1,2-Dichloroethene - VOC	2.8	96.94		
	Toluene - No or Unknown Co-disposal - HAP/VOC	39	92.13		
	Toluene - Co-disposal - HAP/VOC	170	92.13		
	Trichloroethylene (trichloroethene) - HAP/VOC	2.8	131.40		
	Vinyl chloride - HAP/VOC	7.3	62.50		
	Xylenes - HAP/VOC	12	106.16		

Results

Year	Total landfill gas			Methane		
	(Mg/year)	*(m^3/year)*	*(av ft^3/min)*	*(Mg/year)*	*(m^3/year)*	*(av ft^3/min)*
2011	0	0	0	0	0	0
2012	8.060E+02	6.454E+05	4.336E+01	2.153E+02	3.227E+05	2.168E+01
2013	2.375E+03	1.902E+06	1.278E+02	6.344E+02	9.508E+05	6.389E+01
2014	3.860E+03	3.091E+06	2.077E+02	1.031E+03	1.545E+06	1.038E+02
2015	5.265E+03	4.216E+06	2.833E+02	1.406E+03	2.108E+06	1.416E+02
2016	6.595E+03	5.281E+06	3.549E+02	1.762E+03	2.641E+06	1.774E+02
2017	7.855E+03	6.290E+06	4.226E+02	2.098E+03	3.145E+06	2.113E+02
2018	9.046E+03	7.244E+06	4.867E+02	2.416E+03	3.622E+06	2.434E+02
2019	1.017E+04	8.147E+06	5.474E+02	2.718E+03	4.073E+06	2.737E+02
2020	1.124E+04	9.002E+06	6.048E+02	3.003E+03	4.501E+06	3.024E+02
2021	1.225E+04	9.811E+06	6.592E+02	3.273E+03	4.905E+06	3.296E+02
2022	1.321E+04	1.058E+07	7.106E+02	3.528E+03	5.288E+06	3.553E+02
2023	1.411E+04	1.130E+07	7.593E+02	3.770E+03	5.651E+06	3.797E+02
2024	1.497E+04	1.199E+07	8.054E+02	3.999E+03	5.994E+06	4.027E+02
2025	1.578E+04	1.264E+07	8.491E+02	4.215E+03	6.318E+06	4.245E+02
2026	1.655E+04	1.325E+07	8.904E+02	4.420E+03	6.626E+06	4.452E+02
2027	1.728E+04	1.383E+07	9.294E+02	4.614E+03	6.917E+06	4.647E+02
2028	1.796E+04	1.438E+07	9.664E+02	4.798E+03	7.192E+06	4.832E+02
2029	1.861E+04	1.490E+07	1.001E+03	4.972E+03	7.452E+06	5.007E+02
2030	1.923E+04	1.540E+07	1.035E+03	5.136E+03	7.699E+06	5.173E+02
2031	1.981E+04	1.586E+07	1.066E+03	5.292E+03	7.932E+06	5.330E+02
2032	2.018E+04	1.616E+07	1.086E+03	5.391E+03	8.080E+06	5.429E+02
2033	1.910E+04	1.530E+07	1.028E+03	5.102E+03	7.648E+06	5.139E+02
2034	1.808E+04	1.448E+07	9.727E+02	4.829E+03	7.239E+06	4.864E+02
2035	1.711E+04	1.370E+07	9.207E+02	4.571E+03	6.851E+06	4.603E+02
2036	1.620E+04	1.297E+07	8.714E+02	4.326E+03	6.485E+06	4.357E+02
2037	1.533E+04	1.228E+07	8.248E+02	4.095E+03	6.138E+06	4.124E+02
2038	1.451E+04	1.162E+07	7.806E+02	3.876E+03	5.809E+06	3.903E+02
2039	1.373E+04	1.100E+07	7.389E+02	3.668E+03	5.498E+06	3.694E+02
2040	1.300E+04	1.041E+07	6.993E+02	3.472E+03	5.204E+06	3.497E+02
2041	1.230E+04	9.851E+06	6.619E+02	3.286E+03	4.925E+06	3.309E+02
2042	1.164E+04	9.324E+06	6.265E+02	3.110E+03	4.662E+06	3.132E+02
2043	1.102E+04	8.825E+06	5.929E+02	2.944E+03	4.412E+06	2.965E+02
2044	1.043E+04	8.353E+06	5.612E+02	2.786E+03	4.176E+06	2.806E+02
2045	9.873E+03	7.906E+06	5.312E+02	2.637E+03	3.953E+06	2.656E+02
2046	9.344E+03	7.483E+06	5.028E+02	2.496E+03	3.741E+06	2.514E+02
2047	8.844E+03	7.082E+06	4.758E+02	2.362E+03	3.541E+06	2.379E+02
2048	8.371E+03	6.703E+06	4.504E+02	2.236E+03	3.352E+06	2.252E+02
2049	7.923E+03	6.344E+06	4.263E+02	2.116E+03	3.172E+06	2.131E+02
2050	7.499E+03	6.005E+06	4.035E+02	2.003E+03	3.002E+06	2.017E+02
2051	7.098E+03	5.684E+06	3.819E+02	1.896E+03	2.842E+06	1.909E+02
2052	6.718E+03	5.379E+06	3.614E+02	1.794E+03	2.690E+06	1.807E+02
2053	6.358E+03	5.092E+06	3.421E+02	1.698E+03	2.546E+06	1.710E+02
2054	6.018E+03	4.819E+06	3.238E+02	1.608E+03	2.410E+06	1.619E+02
2055	5.696E+03	4.561E+06	3.065E+02	1.521E+03	2.281E+06	1.532E+02
2056	5.391E+03	4.317E+06	2.901E+02	1.440E+03	2.159E+06	1.450E+02
2057	5.103E+03	4.086E+06	2.745E+02	1.363E+03	2.043E+06	1.373E+02
2058	4.830E+03	3.867E+06	2.598E+02	1.290E+03	1.934E+06	1.299E+02
2059	4.571E+03	3.660E+06	2.459E+02	1.221E+03	1.830E+06	1.230E+02
2060	4.327E+03	3.465E+06	2.328E+02	1.156E+03	1.732E+06	1.164E+02

Results (Continued)

Year	Total landfill gas			Methane		
	(Mg/year)	*(m^3/year)*	*(av ft^3/min)*	*(Mg/year)*	*(m^3/year)*	*(av ft^3/min)*
2061	4.095E+03	3.279E+06	2.203E+02	1.094E+03	1.640E+06	1.102E+02
2062	3.876E+03	3.104E+06	2.085E+02	1.035E+03	1.552E+06	1.043E+02
2063	3.668E+03	2.938E+06	1.974E+02	9.799E+02	1.469E+06	9.869E+01
2064	3.472E+03	2.780E+06	1.868E+02	9.274E+02	1.390E+06	9.341E+01
2065	3.286E+03	2.632E+06	1.768E+02	8.778E+02	1.316E+06	8.841E+01
2066	3.110E+03	2.491E+06	1.674E+02	8.308E+02	1.245E+06	8.368E+01
2067	2.944E+03	2.357E+06	1.584E+02	7.864E+02	1.179E+06	7.920E+01
2068	2.786E+03	2.231E+06	1.499E+02	7.443E+02	1.116E+06	7.496E+01
2069	2.637E+03	2.112E+06	1.419E+02	7.045E+02	1.056E+06	7.095E+01
2070	2.496E+03	1.999E+06	1.343E+02	6.668E+02	9.994E+05	6.715E+01
2071	2.363E+03	1.892E+06	1.271E+02	6.311E+02	9.459E+05	6.356E+01
2072	2.236E+03	1.791E+06	1.203E+02	5.973E+02	8.953E+05	6.016E+01
2073	2.117E+03	1.695E+06	1.139E+02	5.653E+02	8.474E+05	5.694E+01
2074	2.003E+03	1.604E+06	1.078E+02	5.351E+02	8.021E+05	5.389E+01
2075	1.896E+03	1.518E+06	1.020E+02	5.065E+02	7.591E+05	5.101E+01
2076	1.795E+03	1.437E+06	9.655E+01	4.794E+02	7.185E+05	4.828E+01
2077	1.699E+03	1.360E+06	9.139E+01	4.537E+02	6.801E+05	4.569E+01
2078	1.608E+03	1.287E+06	8.650E+01	4.294E+02	6.437E+05	4.325E+01
2079	1.522E+03	1.218E+06	8.187E+01	4.064E+02	6.092E+05	4.093E+01
2080	1.440E+03	1.153E+06	7.749E+01	3.847E+02	5.766E+05	3.874E+01
2081	1.363E+03	1.092E+06	7.334E+01	3.641E+02	5.458E+05	3.667E+01
2082	1.290E+03	1.033E+06	6.941E+01	3.446E+02	5.166E+05	3.471E+01
2083	1.221E+03	9.778E+05	6.570E+01	3.262E+02	4.889E+05	3.285E+01
2084	1.156E+03	9.255E+05	6.218E+01	3.087E+02	4.627E+05	3.109E+01
2085	1.094E+03	8.760E+05	5.886E+01	2.922E+02	4.380E+05	2.943E+01
2086	1.035E+03	8.291E+05	5.571E+01	2.766E+02	4.145E+05	2.785E+01
2087	9.800E+02	7.847E+05	5.273E+01	2.618E+02	3.924E+05	2.636E+01
2088	9.275E+02	7.427E+05	4.990E+01	2.478E+02	3.714E+05	2.495E+01
2089	8.779E+02	7.030E+05	4.723E+01	2.345E+02	3.515E+05	2.362E+01
2090	8.309E+02	6.654E+05	4.471E+01	2.219E+02	3.327E+05	2.235E+01
2091	7.865E+02	6.298E+05	4.231E+01	2.101E+02	3.149E+05	2.116E+01
2092	7.444E+02	5.961E+05	4.005E+01	1.988E+02	2.980E+05	2.002E+01
2093	7.045E+02	5.642E+05	3.791E+01	1.882E+02	2.821E+05	1.895E+01
2094	6.668E+02	5.340E+05	3.588E+01	1.781E+02	2.670E+05	1.794E+01
2095	6.311E+02	5.054E+05	3.396E+01	1.686E+02	2.527E+05	1.698E+01
2096	5.974E+02	4.783E+05	3.214E+01	1.596E+02	2.392E+05	1.607E+01
2097	5.654E+02	4.527E+05	3.042E+01	1.510E+02	2.264E+05	1.521E+01
2098	5.351E+02	4.285E+05	2.879E+01	1.429E+02	2.143E+05	1.440E+01
2099	5.065E+02	4.056E+05	2.725E+01	1.353E+02	2.028E+05	1.363E+01
2100	4.794E+02	3.839E+05	2.579E+01	1.281E+02	1.919E+05	1.290E+01
2101	4.537E+02	3.633E+05	2.441E+01	1.212E+02	1.817E+05	1.221E+01
2102	4.295E+02	3.439E+05	2.311E+01	1.147E+02	1.719E+05	1.155E+01
2103	4.065E+02	3.255E+05	2.187E+01	1.086E+02	1.627E+05	1.093E+01
2104	3.847E+02	3.081E+05	2.070E+01	1.028E+02	1.540E+05	1.035E+01
2105	3.641E+02	2.916E+05	1.959E+01	9.726E+01	1.458E+05	9.796E+00
2106	3.447E+02	2.760E+05	1.854E+01	9.206E+01	1.380E+05	9.272E+00
2107	3.262E+02	2.612E+05	1.755E+01	8.713E+01	1.306E+05	8.775E+00
2108	3.087E+02	2.472E+05	1.661E+01	8.247E+01	1.236E+05	8.306E+00
2109	2.922E+02	2.340E+05	1.572E+01	7.806E+01	1.170E+05	7.861E+00
2110	2.766E+02	2.215E+05	1.488E+01	7.388E+01	1.107E+05	7.441E+00
2111	2.618E+02	2.096E+05	1.408E+01	6.993E+01	1.048E+05	7.042E+00

Results (Continued)

Year	Carbon dioxide			NMOC		
	(Mg/year)	*(m^3/year)*	*(av ft^3/min)*	*(Mg/year)*	*(m^3/year)*	*(av ft^3/min)*
2011	0	0	0	0	0	0
2012	5.907E+02	3.227E+05	2.168E+01	3.239E-01	9.036E+01	6.071E-03
2013	1.741E+03	9.508E+05	6.389E+01	9.543E-01	2.662E+02	1.789E-02
2014	2.829E+03	1.545E+06	1.038E+02	1.551E+00	4.327E+02	2.907E-02
2015	3.859E+03	2.108E+06	1.416E+02	2.116E+00	5.903E+02	3.966E-02
2016	4.834E+03	2.641E+06	1.774E+02	2.650E+00	7.394E+02	4.968E-02
2017	5.756E+03	3.145E+06	2.113E+02	3.156E+00	8.805E+02	5.916E-02
2018	6.630E+03	3.622E+06	2.434E+02	3.635E+00	1.014E+03	6.814E-02
2019	7.456E+03	4.073E+06	2.737E+02	4.088E+00	1.141E+03	7.663E-02
2020	8.239E+03	4.501E+06	3.024E+02	4.517E+00	1.260E+03	8.468E-02
2021	8.979E+03	4.905E+06	3.296E+02	4.923E+00	1.374E+03	9.229E-02
2022	9.680E+03	5.288E+06	3.553E+02	5.308E+00	1.481E+03	9.949E-02
2023	1.034E+04	5.651E+06	3.797E+02	5.671E+00	1.582E+03	1.063E-01
2024	1.097E+04	5.994E+06	4.027E+02	6.016E+00	1.678E+03	1.128E-01
2025	1.157E+04	6.318E+06	4.245E+02	6.341E+00	1.769E+03	1.189E-01
2026	1.213E+04	6.626E+06	4.452E+02	6.650E+00	1.855E+03	1.247E-01
2027	1.266E+04	6.917E+06	4.647E+02	6.942E+00	1.937E+03	1.301E-01
2028	1.316E+04	7.192E+06	4.832E+02	7.218E+00	2.014E+03	1.353E-01
2029	1.364E+04	7.452E+06	5.007E+02	7.480E+00	2.087E+03	1.402E-01
2030	1.409E+04	7.699E+06	5.173E+02	7.727E+00	2.156E+03	1.448E-01
2031	1.452E+04	7.932E+06	5.330E+02	7.961E+00	2.221E+03	1.492E-01
2032	1.479E+04	8.080E+06	5.429E+02	8.110E+00	2.262E+03	1.520E-01
2033	1.400E+04	7.648E+06	5.139E+02	7.676E+00	2.141E+03	1.439E-01
2034	1.325E+04	7.239E+06	4.864E+02	7.265E+00	2.027E+03	1.362E-01
2035	1.254E+04	6.851E+06	4.603E+02	6.876E+00	1.918E+03	1.289E-01
2036	1.187E+04	6.485E+06	4.357E+02	6.508E+00	1.816E+03	1.220E-01
2037	1.123E+04	6.138E+06	4.124E+02	6.160E+00	1.719E+03	1.155E-01
2038	1.063E+04	5.809E+06	3.903E+02	5.830E+00	1.627E+03	1.093E-01
2039	1.006E+04	5.498E+06	3.694E+02	5.518E+00	1.540E+03	1.034E-01
2040	9.526E+03	5.204E+06	3.497E+02	5.223E+00	1.457E+03	9.790E-02
2041	9.016E+03	4.925E+06	3.309E+02	4.943E+00	1.379E+03	9.266E-02
2042	8.534E+03	4.662E+06	3.132E+02	4.679E+00	1.305E+03	8.771E-02
2043	8.077E+03	4.412E+06	2.965E+02	4.429E+00	1.235E+03	8.301E-02
2044	7.645E+03	4.176E+06	2.806E+02	4.192E+00	1.169E+03	7.857E-02
2045	7.236E+03	3.953E+06	2.656E+02	3.967E+00	1.107E+03	7.436E-02
2046	6.848E+03	3.741E+06	2.514E+02	3.755E+00	1.048E+03	7.039E-02
2047	6.482E+03	3.541E+06	2.379E+02	3.554E+00	9.915E+02	6.662E-02
2048	6.135E+03	3.352E+06	2.252E+02	3.364E+00	9.384E+02	6.305E-02
2049	5.807E+03	3.172E+06	2.131E+02	3.184E+00	8.882E+02	5.968E-02
2050	5.496E+03	3.002E+06	2.017E+02	3.013E+00	8.407E+02	5.649E-02
2051	5.202E+03	2.842E+06	1.909E+02	2.852E+00	7.957E+02	5.346E-02
2052	4.923E+03	2.690E+06	1.807E+02	2.700E+00	7.531E+02	5.060E-02
2053	4.660E+03	2.546E+06	1.710E+02	2.555E+00	7.128E+02	4.789E-02
2054	4.411E+03	2.410E+06	1.619E+02	2.418E+00	6.747E+02	4.533E-02
2055	4.175E+03	2.281E+06	1.532E+02	2.289E+00	6.386E+02	4.290E-02
2056	3.951E+03	2.159E+06	1.450E+02	2.166E+00	6.044E+02	4.061E-02
2057	3.740E+03	2.043E+06	1.373E+02	2.050E+00	5.720E+02	3.844E-02
2058	3.540E+03	1.934E+06	1.299E+02	1.941E+00	5.414E+02	3.638E-02
2059	3.350E+03	1.830E+06	1.230E+02	1.837E+00	5.125E+02	3.443E-02
2060	3.171E+03	1.732E+06	1.164E+02	1.739E+00	4.850E+02	3.259E-02

Results (Continued)

Year	Carbon dioxide			NMOC		
	(Mg/year)	*(m^3/year)*	*(av ft^3/min)*	*(Mg/year)*	*(m^3/year)*	*(av ft^3/min)*
2061	3.001E+03	1.640E+06	1.102E+02	1.646E+00	4.591E+02	3.085E-02
2062	2.841E+03	1.552E+06	1.043E+02	1.557E+00	4.345E+02	2.919E-02
2063	2.689E+03	1.469E+06	9.869E+01	1.474E+00	4.113E+02	2.763E-02
2064	2.545E+03	1.390E+06	9.341E+01	1.395E+00	3.892E+02	2.615E-02
2065	2.409E+03	1.316E+06	8.841E+01	1.321E+00	3.684E+02	2.475E-02
2066	2.280E+03	1.245E+06	8.368E+01	1.250E+00	3.487E+02	2.343E-02
2067	2.158E+03	1.179E+06	7.920E+01	1.183E+00	3.300E+02	2.218E-02
2068	2.042E+03	1.116E+06	7.496E+01	1.120E+00	3.124E+02	2.099E-02
2069	1.933E+03	1.056E+06	7.095E+01	1.060E+00	2.957E+02	1.987E-02
2070	1.829E+03	9.994E+05	6.715E+01	1.003E+00	2.798E+02	1.880E-02
2071	1.732E+03	9.459E+05	6.356E+01	9.494E-01	2.649E+02	1.780E-02
2072	1.639E+03	8.953E+05	6.016E+01	8.986E-01	2.507E+02	1.684E-02
2073	1.551E+03	8.474E+05	5.694E+01	8.505E-01	2.373E+02	1.594E-02
2074	1.468E+03	8.021E+05	5.389E+01	8.050E-01	2.246E+02	1.509E-02
2075	1.390E+03	7.591E+05	5.101E+01	7.619E-01	2.126E+02	1.428E-02
2076	1.315E+03	7.185E+05	4.828E+01	7.211E-01	2.012E+02	1.352E-02
2077	1.245E+03	6.801E+05	4.569E+01	6.825E-01	1.904E+02	1.279E-02
2078	1.178E+03	6.437E+05	4.325E+01	6.460E-01	1.802E+02	1.211E-02
2079	1.115E+03	6.092E+05	4.093E+01	6.114E-01	1.706E+02	1.146E-02
2080	1.055E+03	5.766E+05	3.874E+01	5.787E-01	1.615E+02	1.085E-02
2081	9.990E+02	5.458E+05	3.667E+01	5.478E-01	1.528E+02	1.027E-02
2082	9.456E+02	5.166E+05	3.471E+01	5.184E-01	1.446E+02	9.718E-03
2083	8.950E+02	4.889E+05	3.285E+01	4.907E-01	1.369E+02	9.198E-03
2084	8.471E+02	4.627E+05	3.109E+01	4.644E-01	1.296E+02	8.706E-03
2085	8.017E+02	4.380E+05	2.943E+01	4.396E-01	1.226E+02	8.240E-03
2086	7.588E+02	4.145E+05	2.785E+01	4.161E-01	1.161E+02	7.799E-03
2087	7.182E+02	3.924E+05	2.636E+01	3.938E-01	1.099E+02	7.382E-03
2088	6.798E+02	3.714E+05	2.495E+01	3.727E-01	1.040E+02	6.987E-03
2089	6.434E+02	3.515E+05	2.362E+01	3.528E-01	9.842E+01	6.613E-03
2090	6.090E+02	3.327E+05	2.235E+01	3.339E-01	9.315E+01	6.259E-03
2091	5.764E+02	3.149E+05	2.116E+01	3.160E-01	8.817E+01	5.924E-03
2092	5.455E+02	2.980E+05	2.002E+01	2.991E-01	8.345E+01	5.607E-03
2093	5.163E+02	2.821E+05	1.895E+01	2.831E-01	7.898E+01	5.307E-03
2094	4.887E+02	2.670E+05	1.794E+01	2.680E-01	7.475E+01	5.023E-03
2095	4.626E+02	2.527E+05	1.698E+01	2.536E-01	7.075E+01	4.754E-03
2096	4.378E+02	2.392E+05	1.607E+01	2.400E-01	6.697E+01	4.500E-03
2097	4.144E+02	2.264E+05	1.521E+01	2.272E-01	6.338E+01	4.259E-03
2098	3.922E+02	2.143E+05	1.440E+01	2.150E-01	5.999E+01	4.031E-03
2099	3.712E+02	2.028E+05	1.363E+01	2.035E-01	5.678E+01	3.815E-03
2100	3.513E+02	1.919E+05	1.290E+01	1.926E-01	5.374E+01	3.611E-03
2101	3.325E+02	1.817E+05	1.221E+01	1.823E-01	5.087E+01	3.418E-03
2102	3.147E+02	1.719E+05	1.155E+01	1.726E-01	4.814E+01	3.235E-03
2103	2.979E+02	1.627E+05	1.093E+01	1.633E-01	4.557E+01	3.062E-03
2104	2.820E+02	1.540E+05	1.035E+01	1.546E-01	4.313E+01	2.898E-03
2105	2.669E+02	1.458E+05	9.796E+00	1.463E-01	4.082E+01	2.743E-03
2106	2.526E+02	1.380E+05	9.272E+00	1.385E-01	3.864E+01	2.596E-03
2107	2.391E+02	1.306E+05	8.775E+00	1.311E-01	3.657E+01	2.457E-03
2108	2.263E+02	1.236E+05	8.306E+00	1.241E-01	3.461E+01	2.326E-03
2109	2.142E+02	1.170E+05	7.861E+00	1.174E-01	3.276E+01	2.201E-03
2110	2.027E+02	1.107E+05	7.441E+00	1.111E-01	3.101E+01	2.083E-03
2111	1.919E+02	1.048E+05	7.042E+00	1.052E-01	2.935E+01	1.972E-03

2.0 BLOWER AND WELLFIELD ANALYSIS

RICHARDSON SMITH GARDNER & ASSOCIATES
ENGINEERING & GEOLOGICAL SERVICES

DATE: 16-Mar-12
BY: LAQ
JOB NO: MPW-10-2
CHKD:

Wayne County
Landfill Gas Collection System
Flare Station Blower & Piping Design

Objective: Determine blower and piping system parameters for the proposed landfill gas system.

Shaded cells require user entry of values.

Given:

1.	Current CH_4 Gas Generation Rate (2010):	662	SCFM	------>	Ref. 4
2.	Maximum CH_4 Gas Generation Rate, Q_{max}:	1,500	SCFM	------>	Ref. 4 ("Maximum" calculated using LandGEM software)
3.	Minimum Flow Velocity:	60	FPM	------>	Minimum to maintain turbulent flow conditions.
4.	Maximum Flow Velocity:	2,400	FPM	------>	"Rule of Thumb" *(1200 FPM for concurrent flow and 2400 FPM with current flow)*

Reference:

1. Design and As-Built Drawings for Wayne County Landfill
2. Driscopipe Design Manual
3. U.S. Army Corps of Engineers Manual EM 1110-1-4016
4. Landfill Gas Generation Calculations dated September 2010
5. "Landfill Gas System Engineering Design - A Practical Approach - Based on a Decade of Experience" by LANDTEC
6. Fluid Mechanics, Streeter and Wylie, 1985, McGraw Hill Publishing.
7. "Air Emissions from Municipal Solid Waste Landfills - Background Information for Proposed Standards and Guidelines," Document EPA-450/3-90-011a, USEPA, March 1991.
8. "Flow of Fluids - Through Valves, Fittings, and Pipe", Crane Technical Paper No. 410, Crane Valves, 1988.
9. "Design Manual for Lateral Drainage Systems, Richardson, Giroud, and Zhao, Tenax Corporation, 2000.
10. "The Hydrologic Evaluation of Landfill Performance (HELP) Model - Engineering Documentation for Version 3", Document EPA/600/R-94/168b, USEPA, September 1994

Calculations: The blowers will be designed for critical elements as follows:

* Piping Requirements
* Flow Requirements
* Radius of Influence
* Condensate Traps
* Blower Requirements

1. Piping Requirements

-------> Determine Nominal Header Piping Size

The Header Piping Size is sized for peak conditions for total Landfill Gas (LFG).

Estimated % concentration of CH_4 in LFG = ***50%*** ----> Typical gas concentration for similar systems.

Estimated maximum collection efficiency, η = ***75%*** ----> Upon Final cover system completion

Therefore, @ Peak Conditions, Qreq = 2,250 CFM

Equivalent heating value (HHV = 1,013 BTU's/CF) @ Peak Conditions = 2,279,250 BTU's/minute
Equivalent heating value (LHV = 915 BTU's/CF) @ Peak Conditions = 2,058,750 BTU's/minute

Nominal Blower Rate: **1,600** **SCFM** ---> Assumed design value for the system by Engineer.

RICHARDSON SMITH GARDNER & ASSOCIATES
ENGINEERING & GEOLOGICAL

DATE: 16-Mar-12
BY: LAQ
JOB NO: MPW-10-2
CHKD:

Wayne County
Landfill Gas Collection System
Flare Station Blower & Piping Design

-------> Determine Design Flow Rate, Q_{DES} under Actual flow conditions

Atmospheric pressure at project location:				14.6	PSI (atm) (based on site elev. of 150 ft)
Design Blower Inlet Pressure:	-50	IN of H_2O	=====>	12.8	PSI (atm) ----> See chart pressure chart below.
	-1.8	PSI (gauge)			

			Water Saturation Pressure at Actual T:	1.0	PSI (atm)
Standard temp.:	60	°F	Actual temperature:	100	°F --> Assumed for landfill gas.
Standard pressure:	14.696	PSI (atm)	Actual pressure:	12.8	PSI (atm)
Standard RH:	0%		Actual RH:	100%	--> Assumed saturated for landfill gas.
SCFM:	1,600	====>	ACFM:	2,146	

Atmospheric Pressure Chart at Site Elevation (MSL - Mean Sea Level)

Feet	PSIA
0	14.7
328	14.5
500	14.4
656	14.3
1,000	14.2
1,312	14.0
1,500	13.9
2,000	13.7
2,500	13.4
3,000	13.2
3,500	12.9
4,000	12.7
4,500	12.4
5,000	12.2
5,500	12.0
6,000	11.8
6,500	11.5
7,000	11.3
7,500	11.1
8,000	10.9
8,500	10.7

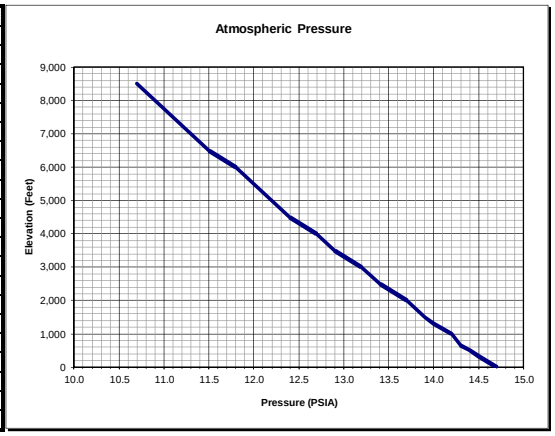

Design System Flow Rate, Q_{DES}: 2,146 ACFM

2. *Gas Density*

Determine gas vapor density at anticipated field conditions as follows:

Vapor Density, $\rho = (M_{air} * P_{gas})/(10.732 * T_{gas})$

where:
ρ = vapor density, PCF
M_{air} = molecular weight of air
P_{gas} = gas pressure, PSI-A
T_{gas} = temperature of gas, rankine (= temp °F +459.67)

Molecular weight of air, M_{air} =	29	Appendix A-8 for Air at 68°F and at atmospheric pressure., Ref. 8
Pressure of LFG, P_{gas} =	12.8	PSI-A
Temperature of LFG, T_{gas} =	100	°F
Vapor density, ρ =	6.18E-02	PCF

RICHARDSON SMITH GARDNER & ASSOCIATES
ENGINEERING & GEOLOGICAL SERVICES

DATE: 16-Mar-12
BY: LAQ
JOB NO: MPW-10-2
CHKD:

Wayne County
Landfill Gas Collection System
Flare Station Blower & Piping Design

3 Flow Requirements

Gas flow is desired in fully turbulent conditions. Therefore, minimum flow velocities will be determined by the Reynolds number, R.
The Reynolds, R, number is used to verify this condition in the main header pipe as follows:

Reynolds Number, $R_e = V*D*\rho / \mu$

Where:
V = velocity, FPS
D = pipe inside diameter, FT
ρ = density of LFG, PCF
μ = absolute viscosity, slugs/ft-sec = μ_o {(0.555T_o+C)/(0.555T+C)}*(T/T_o)^(3/2) * 2.09E-5

Minimum velocity, V =	1	FPS --->	**60.0 FPM**
Pipe Inside Diameter (I.D.) =	12.92	IN (diameter of header pipe)	
density of LFG, ρ =	0.0815	PCF ---->	Density of LFG = .0815 PCF (55% CO_2 & 45% CH_4) - Richardson, Giroud, & Zhao, Ref. 9
Temperature of LFG, T_{gas} =	560	^oR	
Southerland's Constant, C =	120	----->	Appendix A-5 for Air, Ref. 8
Absolute Temperature, T_o =	528	^oR	-----> Standard Air at 68^oF
standard viscosity, μ_o =	0.0183	cP	-----> Appendix A-5 for Air @ 70^oF, Ref. 8
calculated absolute viscosity, μ =	4.00E-07	slugs/ft-sec	----> Assume value = 8.14E-06 slugs/ft-sec ---> recommended, Ref. 5

Reynolds Number, Re = 10,777 > 10,000 OK -----> Full turbulent flow conditions exist at minimum velocity requirement

Density calculations assume compressibility is equal to 1. This is considered negligible at low (near ambient) temperatures and pressures with low Mach numbers (< 0.3) . Therefore, the Mach, M, number is used to verify this condition as follows:
As long as the fluid speed is sufficiently subsonic (*V* < mach 0.3), the incompressible Bernoulli's equation describes the flow reasonably well.

Mach Number, $M_A = V / sqrt(kRT)$

Where:
V = velocity, FPS
k = specific heat ratio (c_p/c_v)
R = specific gas constant,
T = absolute temperature for a perfect gas

Velocity, V =	347.00	FPS --->	**20,820 FPM ----> Flow is incompressible, use 1200 & 2400 FPM "Rule of Thumb"**
Specific heat ratio, k =	1.40	---->	Appendix A-8 for Air at 68^oF and atmospheric pressure, Ref. 8
specific gas constant, R_{AIR} =	1716.59	ft - lbs (force)/slug - ^oR	----> Appendix A-8 for Air at 68^oF and atmospheric pressure, Ref. 8 (53.3*32.2)
absolute temperature for a gas, T =	5.60E+02	^oR	

Mach Number, Ma = 0.299 < 0.3 OK -----> Flow is incompressible at maximum flow velocity requirement.

Therefore, the requirement for both turbulent and incompressible flow is achieved by Rule of Thumb (1,200 and 2,400 FPM) within velocities between 60 and 20820 FPS

-------> Determine Nominal Header Pipe Size:

Pipes are sized to keep flow velocities and pressure drops within GIVEN ranges.

Use the Continuity Equation for incompressible steady flow to determine flow velocity, Q = V*A

Where:
Q = Flowrate (cfs)
V = Velocity (fps)
A = Area (square feet)

Example Calculation:	16	inch main at flare station			
Number of Pipes	1	Flow Direction:	Current		
Standard Pipe Diameter (I.D.) =	12.916	inches	------>	DR	17
Nominal Pumping Rate, Q =	2,146	ACFM			
Area, A =	0.910	SF			
Velocity, V =	2359	FPM	< 2,400 FPM -----> OK!		

Additional pipe sizing and pressure distribution analysis is provided under the KYPipe Modelling software **attached**.

Wayne County
Landfill Gas Collection System
Flare Station Blower & Piping Design

4 Well Spacing

The well spacing is determined by the radius of influence for a corresponding design vacuum at the well.
Well spacing should generally not exceed twice the calculated radius of influence.

-------> Calculate required radius of influence and number of wells.

Radius of influence, R, is calculated according the following equation (Ref. 7):

$$R = \sqrt{\frac{Q_{well} M}{\pi L \rho_{waste} Q_{\max}}}$$

Where:
Q_{max} = maximum gas generation rate, SCFM
M = landfill design capacity, lbs
L = well depth, FT
ρ_{waste} = density of waste, PCF
Q_{well} = gas flow per well, CFS
Collection Efficiency: 75%

Q_{max} =	216	SCFM ---> maximum gas collection for Unit 3 Phase 1	
Area of collection =	23.25	AC ----> Based on Unit 3 Phase 1	
Number of wells =	12	-----> Adjusted for radius of influence and offset from perimeter.	
Gas flow per well, Q_{well} =	0.30	SCFS ----> (Q_{max} / Number of wells)	
Density of waste, ρ_{waste} =	0.6	TCY	
Landfill design capacity, M =	4.56E+05	TN ----> Ref. 4	
Average Well depth, L =	15	FT	Average length of perforated casing.
Minimum radius of influence, R =	**190**	**FT**	

Compare minimum required radius of influence with design radius of influence based on permeability and vacuum at each well.

-------> Calculate intrinsic permeability of waste.

Intrinsic permeability, K_{waste}, of waste is calculated by the following equation:

$K = k\mu/\gamma$ Where: k = horizontal hydraulic conductivity of waste
μ = dynamic viscosity of water, N-sec/m^2
γ = unit weight of water, N/m^3

Horizontal hydraulic conductivity, k =	1.00E-03	cm/sec ----> Table 4 for Municipal Waste, Ref. 10	
Dynamic or absolute viscosity of water, μ =	1.00E-03	N-sec/m^2 -----> Table C.1 for water at 20°C, Ref. 6	
Unit weight of water, γ =	998.2	N/m^3 -----> Table C.1 for water at 20°C, Ref. 6	
Intrinsic permeability of waste, K =	1.00E-11	m^2 ------>	**1.08E-10 ft^2**

Wayne County
Landfill Gas Collection System
Flare Station Blower & Piping Design

-------> Calculate radius of influence of a well based on pressure.

Radius of influence is determined by the following equation (Ref. 7):

$$\frac{P_{landfill}^2 - P^2{}_{vac}}{P_{vac}} = \frac{R^2 \mu_{LFG} \rho_{waste} Q_{\max}}{MK_{waste}(L/D)} \ln\left(\frac{R}{r}\right)$$

Where:
$P_{landfill}$ = allowable internal pressure in landfill, PSF-A
P_{vacuum} = pressure in gas well, PSF-A
R = radius of influence, FT
μ_{LFG} = dynamic viscosity of landfill gas, lbs-sec/SF
ρ_{waste} = density of waste, PCF
Q_{max} = maximum gas generation rate, CFS
M = landfill design capacity, lbs
K_{waste} = intrinsic permeability of waste, SF
L = well depth, FT
D = depth of waste, FT
r = radius of well, FT

Allowable internal pressure in landfill, $P_{landfill}$ =	14.6	PSI ------>	Atmospheric Pressure at the project site.
Vacuum applied at gas well, P_{well} =	20.0	IN of H_2O ---------->	0.7226 PSI
Pressure in gas well, P_{vacuum} =	13.88	PSI	
dynamic or absolute viscosity of landfill gas, μ_{LFG} =	8.14E-06	lbs-sec/SF	
Density of waste, ρ_{waste} =	0.6	TCY	
Maximum gas generation rate, Q_{max} =	3.60	SCFS	
Landfill design capacity, M =	4.56E+05	TN	
Intrinsic permeability of waste, K_{waste} =	1.08E-10	SF	
Average Well depth, L =	15	FT	
Average Depth of waste, D =	30	FT	
Radius of collection well, r =	1.5	FT	
R = radius of influence, FT	**49**	**FT**	
S = Optimal Well Spacing, = 1.7 * radius of influence, FT	**84**	**FT**	(Factor of 1.732 from Ref. 7, Fig. 4-5)

Due to the small waste thickness, calculated ROI is small, but it is not practical to space wells more closely.

Note in Unit 3 Phases 2 & 3, Horizontal Collectors are used.

Use the solver function below to vary the required vacuum applied at the gas well (P_{well}) and satisfy both sides of the equation.

$$\frac{P_{landfill}^2 - P^2{}_{vac}}{P_{vac}} = 213.527$$

$$\frac{R^2 \mu_{LFG} \rho_{waste} Q_{\max}}{MK_{waste}(L/D)} \ln\left(\frac{R}{r}\right) = 216.247$$

-2.720 *to solve, set equal to zero*

Wayne County
Landfill Gas Collection System
Flare Station Blower & Piping Design

4.1 Collection Trench Spacing

The trench spacing is determined by the radius of influence for a corresponding design vacuum at the trench.
Collection trench spacing should generally not exceed twice the calculated radius of influence. Apply approach to proposed radial collecto

-------> Calculate intrinsic permeability of waste.

Intrinsic permeability, K_{waste}, of waste is calculated by the following equation:

$K = k\mu/\gamma$ Where: k = horizontal hydraulic conductivity of waste
μ = dynamic viscosity of water, N-sec/m^2
γ = unit weight of water, N/m^3

Horizontal hydraulic conductivity, k =	1.00E-03	cm/sec ----> Table 4 for Municipal Waste, Ref. 10
Dynamic or absolute viscosity of water, μ =	1.00E-03	N-sec/m^2 -----> Table C.1 for water at 20°C, Ref. 6
Unit weight of water, γ =	998.200	N/m^3 -----> Table C.1 for water at 20°C, Ref. 6
Intrinsic permeability of waste, K =	1.00E-11	m^2 ------> **1.08E-10 ft^2**

-------> Calculate required radius of influence and number of trenches.

Radius of influence, R, is calculated according the following equation (Ref. 5):

$$S = 2\sqrt{\frac{8760k_{waste}\left(\frac{D_1}{D_2}\right)\left(\frac{1}{\rho}\right)*144*\left(p_{vacuum} - p_{landfill}\right)}{1.902588e\text{-}006*Q_{trench}(2000*\rho_{waste})}}$$

Where:
Q_{trench} = gas flow per trench, CFS
D_1 = depth of saturated gas flow, FT
D_2 = depth of waste, FT
ρ = vapor density, PCF
k_{waste} = coefficient of permeability of waste, ft/hr
$P_{landfill}$ = allowable internal pressure in landfill, PSF-A
P_{vacuum} = pressure in gas well, PSF-A
ρ_{waste} = Density of waste, PCF
S = trench spacing, FT

Horizontal hydraulic conductivity, k_{waste} =	1.181E-04	ft/hr ----> Table 4 for Municipal Waste, Ref. 10
D_1 = depth of saturated gas flow =	25	FT
D_2 = depth of waste =	30	FT
Vapor density, ρ =	8.14E-02	PCF
Allowable internal pressure in landfill, $P_{landfill}$ =	12.8	PSI ------> Atmospheric Pressure at Site Elevation
Vacuum applied at collection trench, P_{trench} =	10	IN of H_2O
Pressure in gas well, P_{vacuum} =	12.44	PSI
Gas flow per trench, Q_{trench} =	100	CFM
Density of waste, ρ_{waste} =	0.60	TCY
Trench spacing, S =	**98**	**FT**

Compare minimum required radius of influence with design radius of influence based on vacuum and flow for radial (spider) collector optic

Note that that three (3) options are considered both varying lengths, numbers, and perforations **attached**.

3.0 RADIAL COLLECTOR ANALYSIS

RICHARDSON SMITH GARDNER & ASSOCIATES
ENGINEERING & GEOLOGICAL SERVICES

SHEET:	/
JOB #:	MPW-10-2
DATE:	12/1/10
BY:	TBM
CHKD BY:	GGM

MP Wayne Gas Collection System Expansion
Radial Collector Analysis - 3 Zones (4 spokes) - Type A

Maximum Distance Between Spoke Tips [check that Dmax < 2R where R is collector radius of influence] [Assume R ~ 100 ft]

$$D_{max} = 2L\left(\sin\frac{\pi}{N}\right)$$

D_{max} (ft) = maximum distance between spoke ends
N = number of spokes around hub
L (ft) = length of spoke

Volume Influenced by an Interval of a Spoke [start with outermost interval]

$$V = H\frac{\pi}{N}\left(r_2^2 - r_1^2\right)$$

V (cf) = volume influenced by interval of spoke
H (ft) = vertical separation between spoke layers
r_1 (ft) = distance from hub at inner end of interval
r_2 (ft) = distance from hub at outer end of interval [r_2 = L for outermost interval]

Find Radius to Match a Given Volume [select inner intervals such that they influence volume equal to outer interval]

$$r_o = \sqrt{r_1^2 - \frac{VN}{H\pi}}$$

r_o (ft) = distance from hub at inner end of interval having r_1 as the outer end of the interval

Match Perforation Areas [use equal perforation areas to influence equal volumes]

PD1 = PD2 (L2/L1)

PDi (sf/ft) = perforation density of spoke interval i
Li (ft) = length of spoke interval i

Calculations

PD2 (sf/ft) = 0.0136 Perforation Density for Outermost Interval

	H (ft)	N (dimensionless)	L (ft)	D_{max} (ft)	r_1 (ft)	V_2=V_1 (cf)	r_o (ft)	PD1 (sf/ft)	V_o (cf)	PDo (sf/ft)
1	20	4	100	141	80	56,549	53	0.0101	43,982	0.0040
2	20	4	140	198	105	134,696	49	0.0086	38,485	0.0028
3	20	4	200	283	160	226,195	106	0.0101	175,929	0.0040

Perforation Calculator:

For Trial 2:

	Outer Interval		Middle Interval		Inner Interval	
Hole Diameter (d) =	0.5	inches	Perforation Density 1 =	0.0086	sf/ft	0.0028 sf/ft
No. of Holes Per Foot =	10		Hole Diameter (d) =	0.5	inches	0.5 inches
Perforation Density 2 =	0.0136	sf/ft	No. of Holes Per Foot =	6.3		2.0
L2=	35		L1=	56	Lo=	49
Total sf of holes	0.477238467		Total sf of holes	0.477238467	Total sf	0.136353848
sf of holes/cf of waste	3.54308E-06		sf of holes/cf of waste	3.54308E-06	sf/cf	3.54308E-06
Spacing between pairs of holes (in):	**2.4**			**3.8**		**11.9**

SHEET:	/
JOB #:	MPW-10-2
DATE:	12/1/10
BY:	TBM
CHKD BY:	GGM

MP Wayne Gas Collection System Expansion
Radial Collector Analysis - 3 Zones - Type B

Maximum Distance Between Spoke Tips [check that Dmax < 2R where R is collector radius of influence] [Assume R ~ 100 ft]

$$D_{max} = 2L\left(\sin\frac{\pi}{N}\right)$$

D_{max} (ft) = maximum distance between spoke ends
N = number of spokes around hub
L (ft) = length of spoke

Volume Influenced by an Interval of a Spoke [start with outermost interval]

$$V = H\frac{\pi}{N}\left(r_2^2 - r_1^2\right)$$

V (cf) = volume influenced by interval of spoke
H (ft) = vertical separation between spoke layers
r_1 (ft) = distance from hub at inner end of interval
r_2 (ft) = distance from hub at outer end of interval [r_2 = L for outermost interval]

Find Radius to Match a Given Volume [select inner intervals such that they influence volume equal to outer interval]

$$r_o = \sqrt{r_1^2 - \frac{VN}{H\pi}}$$

r_o (ft) = distance from hub at inner end of interval having r_1 as the outer end of the interval

Match Perforation Areas [use equal perforation areas to influence equal volumes]

PD1 = PD2 (L2/L1)

PDi (sf/ft) = perforation density of spoke interval i
Li (ft) = length of spoke interval i

Calculations

PD2 (sf/ft) = 0.0109 Perforation Density for Outermost Interval

	H (ft)	N (dimensionless)	L (ft)	D_{max} (ft)	r_1 (ft)	V_2=V_1 (cf)	r_o (ft)	PD1 (sf/ft)	V_o (cf)	PDo (sf/ft)
1	20	5	100	118	80	45,239	53	0.0081	35,186	0.0032
2	20	5	150	176	120	101,788	79	0.0081	79,168	0.0032
3	20	5	200	235	160	180,956	106	0.0081	140,743	0.0032

Perforation Calculator:

For Trial 2:

	Outer Interval		Middle Interval		Inner Interval	
Hole Diameter (d) =	0.5	inches	Perforation Density 1 =	0.0081	sf/ft	0.0032 sf/ft
No. of Holes Per Foot =	8		Hole Diameter (d) =	0.5	inches	0.5 inches
Perforation Density 2 =	0.0109	sf/ft	No. of Holes Per Foot =	5.9		2.4
L2=	30		L1=	41	Lo=	79
Total sf of holes	0.327249235		Total sf of holes	0.327249235	Total sf	0.254527183
sf of holes/cf of waste	3.21502E-06		sf of holes/cf of waste	3.21502E-06	sf/cf	3.21502E-06
Spacing between pairs of holes (in):	**3.0**			**4.1**		**10.2**

Perforation Design:

1 For 5 100-ft spokes - Use 2.5/ft for inner 53 ft; 6/ft for next 27 ft; 8/ft for outer 20 ft
2 For 5 150-ft spokes - Use 2.5/ft for inner 80 ft; 6/ft for next 40 ft; 8/ft for outer 30 ft
3 For 5 200-ft spokes - Use 2.5/ft for inner 100 ft; 6/ft for next 60 ft; 8/ft for outer 40 ft

SHEET:	/
JOB #:	MPW-10-2
DATE:	12/1/10
BY:	TBM
CHKD BY:	GGM

MP Wayne Gas Collection System Expansion
Radial Collector Analysis - Minimal Perforations (Type C)

Flow Rate Through a Perforation

$$q = C_f A \sqrt{\frac{2 \Delta P}{\rho}}$$

[assumes each perforation is analgous to an orifice flow meter]
[assumes incompressible steady flow, not necessarily valid]

q (cfs) = flow rate through perforation
Cf = dimensionless flow coefficient, ranges from 0.6 to 0.9 (assume Cf=0.6)
A (sf) = area of orifice
ΔP (psf) = pressure drop from landfill to pipe interior [1 in-w.c. = 5.202 psf]
ρ (pcf) = density of landfill gas

Inputs

Total Q per spoke (cfm) =	20	
ρ (pcf) =	0.07	Representative of landfill gas over 0 to 10 in-w.c. vacuum
Cf =	0.60	
Perf. Size (inch) =	0.50	
A (sf) =	1.364E-03	

Calculations

For decreasing vacuum:

	ΔP (psf)	q (cfs)	q (cfm)	Design q for FS=2	Interval L (ft)	Interval V	Interval Q (cfm)	Perf Spacing (ft)
Zone 1 (0 to 80)	52	0.0315	1.89	0.95	80	28%	5.6	13.5
Zone 2 (80 to 120)	26	0.0223	1.34	0.67	40	36%	7.2	3.7
Zone 3 (120 to 150)	1	0.0044	0.26	0.13	30	36%	7.2	0.5

For constant vacuum:

	ΔP (psf)	q (cfs)	q (cfm)	Design q for FS=2	Interval L (ft)	Interval V	Interval Q (cfm)	Perf Spacing (ft)
Zone 1 (0 to 80)	52	0.0315	1.89	0.95	80	28%	5.6	13.5
Zone 2 (80 to 120)	52	0.0315	1.89	0.95	40	36%	7.2	5.3
Zone 3 (120 to 150)	52	0.0315	1.89	0.95	30	36%	7.2	3.9

4.0 PRESSURE DISTRIBUTION

THIS PAGE INTENTIONALLY LEFT BLANK

4.1 PRESSURE DISTRIBUTION EXISTING

THIS PAGE INTENTIONALLY LEFT BLANK

Pre-Expansion Wayne County Landfill: -10 Well Demand, -50 Reservoir Demand

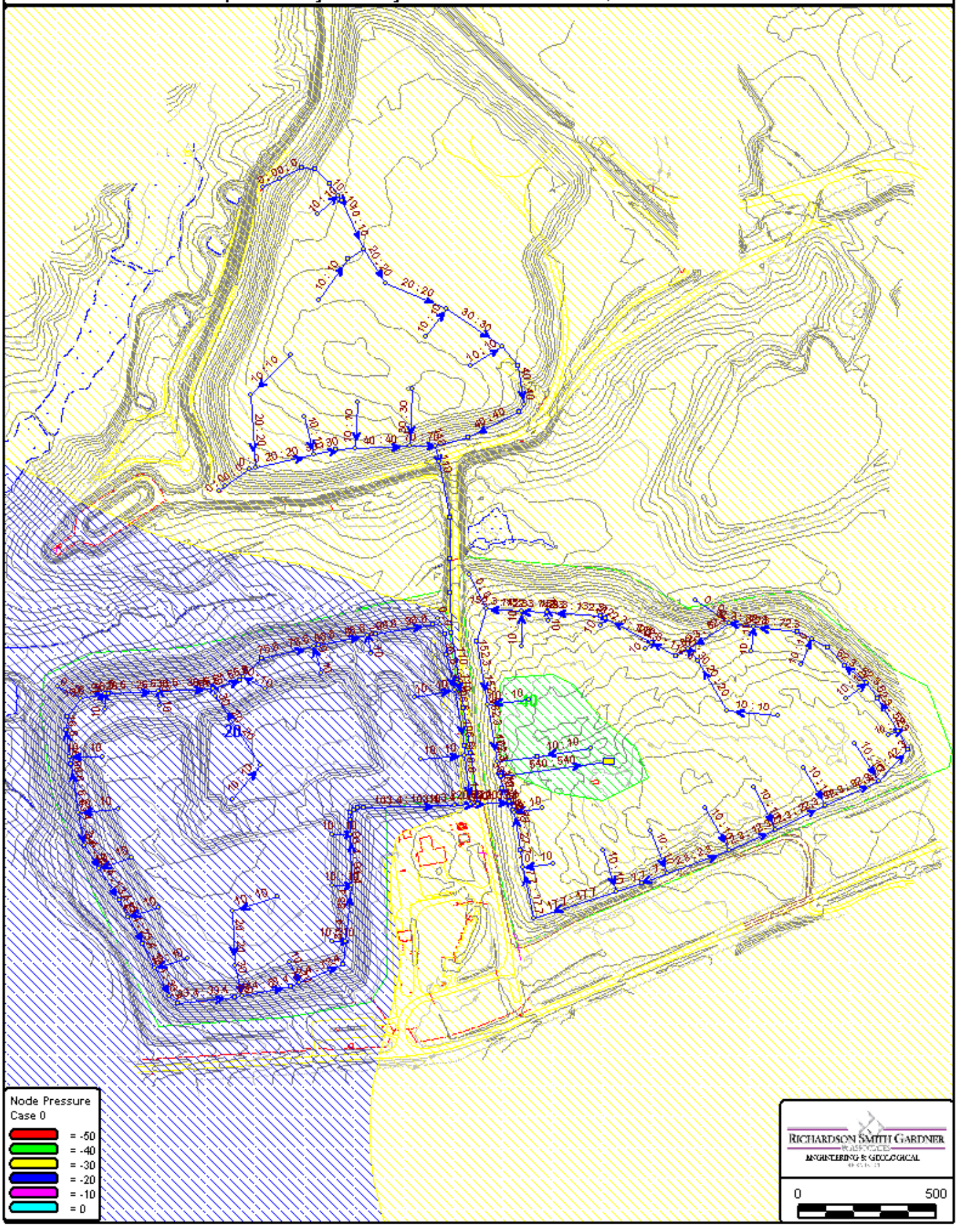

THIS PAGE INTENTIONALLY LEFT BLANK

```
***  GAS2008 Version 1.0 ***
GAS DISTRIBUTION NETWORK ANALYSIS
COPYRIGHT 2007 - DON J. WOOD, SRINI LINGIEDDY
LEXINGTON, KY
Updated March 2007


INPUT DATA FILE NAME FOR THIS SIMULATION  = C:\Users\ADMINI~1.RSG\DOCUME~1\KYPI
PE~1\User\Wayne_Co.DAT
OUTPUT DATA FILE NAME FOR THIS SIMULATION = C:\Users\ADMINI~1.RSG\DOCUME~1\KYPI
PE~1\User\Wayne_Co.OT2

DATE FOR THIS COMPUTER RUN       : 10-15-2010
START TIME FOR THIS COMPUTER RUN : 10:17:54:80


SUMMARY OF DISTRIBUTION SYSTEM CHARACTERISTICS:
-----------------------------------------------


NUMBER OF PIPES           =   126
NUMBER OF JUNCTION NODES  =   124

UNITS SPECIFIED           = ENGLISH



PROPERTIES OF THE GAS FOR THIS ANALYSIS ARE:

 OPERATING TEMPERATURE                =     100.00 DEGREES FAHRENHEIT
 REFERENCE DENSITY (@ STD. PRESSURE) =    .71E-01 POUNDS / CUBIC FOOT
 GAS MOLECULAR WEIGHT                =      28.97
 GAS SPECIFIC GRAVITY                =       1.00
 RATIO OF SPECIFIC HEATS             =       1.00
 GAS CONSTANT                        =      53.34
 ABSOLUTE VISCOSITY                  =    .88E-05 POUND SECONDS/SQUARE FOOT


USER SPECIFIED FLOW UNITS (USFU)     = SCF / MIN.
USER SPECIFIED PRESSURE UNITS (USPU) = INCHES OF WATER (GAUGE)


-------  SUMMARY OF PIPE NETWORK GEOMETRIC AND OPERATING DATA  -------
```

PIPE NAME	NODE #1	NODE #2	LENGTH (FT.)	DIAM. (IN.)	ROUGHNESS (MILLIFEET)	SUM-M FACT.	PUMP ID	ELEVATION CHANGE
P-1	J-1	J-16	253.0	6.0	******	.0	0	.0
P-3	J-3	J-4	239.0	8.0	******	.0	0	.0
P-4	J-4	J-5	126.0	6.0	******	.0	0	.0
P-5	J-4	J-6	244.0	8.0	******	.0	0	.0
P-6	J-6	J-7	136.0	6.0	******	.0	0	.0
P-7	J-6	J-37	234.0	8.0	******	.0	0	.0
P-8	J-8	J-8a	56.0	8.0	******	.0	0	.0

P-9	J-8	J-9	94.0	8.0	******	.0	0	.0
P-10	J-9	J-9a	204.0	6.0	******	.0	0	.0
P-11	J-9	J-10	197.0	8.0	******	.0	0	.0
P-12	J-10	J-11	165.0	6.0	******	.0	0	.0
P-13	J-10	J-13	156.0	8.0	******	.0	0	.0
P-14	J-13	J-12	144.0	6.0	******	.0	0	.0
P-15	J-13	J-14	213.0	8.0	******	.0	0	.0
P-16	J-14	J-38a	23.0	8.0	******	.0	0	.0
P-17	J-14	J-67	265.0	6.0	******	.0	0	.0
P-18	J-16	J-3	150.0	8.0	******	.0	0	.0
P-19	J-16	J-39a	191.0	8.0	******	.0	0	.0
P-20	J-18	J-19	100.0	6.0	******	.0	0	.0
P-21	J-18	J-21	267.0	4.0	******	.0	0	.0
P-41	J-37	J-8	363.0	8.0	******	.0	0	.0
P-43	J-21	J-25b	68.0	4.0	******	.0	0	.0
P-46	J-38a	J-15	109.0	4.0	******	.0	0	.0
P-47	J-39a	J-18	24.0	8.0	******	.0	0	.0
P-48	J-15	J-38b	27.0	4.0	******	.0	0	.0
P-61	J-43u	J-46a	320.0	6.0	******	.0	0	.0
P-62	J-43	J-43v	146.0	2.0	******	.0	0	.0
P-63	J-43	J-55	177.0	6.0	******	.0	0	.0
P-64	J-44	J-58e	357.0	6.0	******	.0	0	.0
P-65	J-45	J-43u	190.0	6.0	******	.0	0	.0
P-66	J-43q	J-45	108.0	4.0	******	.0	0	.0
P-67	J-46a	J-46	194.0	6.0	******	.0	0	.0
P-68	J-46a	J-43s	158.0	4.0	******	.0	0	.0
P-69	J-46	J-47	242.0	6.0	******	.0	0	.0
P-70	J-46	J-74	168.0	4.0	******	.0	0	.0
P-71	J-47	J-48	182.0	6.0	******	.0	0	.0
P-72	J-47	J-42c	178.0	4.0	******	.0	0	.0
P-73	J-48	J-49	202.0	6.0	******	.0	0	.0
P-74	J-48	J-42e	174.0	4.0	******	.0	0	.0
P-75	J-49	J-50	214.0	6.0	******	.0	0	.0
P-76	J-49	J-42g	161.0	4.0	******	.0	0	.0
P-77	J-50	J-51	233.0	6.0	******	.0	0	.0
P-78	J-50	J-42i	165.0	4.0	******	.0	0	.0
P-79	J-51	J-52	212.0	6.0	******	.0	0	.0
P-80	J-51	J-42k	37.0	4.0	******	.0	0	.0
P-81	J-52	J-53	256.0	6.0	******	.0	0	.0
P-82	J-52	J-42m	96.0	4.0	******	.0	0	.0
P-83	J-53	J-54	218.0	6.0	******	.0	0	.0
P-84	J-53	J-42s	99.0	4.0	******	.0	0	.0
P-85	J-54	J-43	90.0	6.0	******	.0	0	.0
P-86	J-54	J-42u	92.0	4.0	******	.0	0	.0
P-87	J-55	J-42w	152.0	6.0	******	.0	0	.0
P-88	J-55	J-41	58.0	4.0	******	.0	0	.0
P-89	J-56	J-42o	184.0	4.0	******	.0	0	.0
P-91	J-42w	J-42y	187.0	6.0	******	.0	0	.0
P-92	J-42w	J-42q	27.0	4.0	******	.0	0	.0
P-94	J-42y	J-42	214.0	6.0	******	.0	0	.0
P-95	J-42y	J-75	33.0	4.0	******	.0	0	.0
P-96	J-42	J-58d	96.0	6.0	******	.0	0	.0
P-97	J-42	J-43c	31.0	4.0	******	.0	0	.0
P-98	J-58d	J-44	127.0	6.0	******	.0	0	.0
P-99	J-58d	J-43e	129.0	4.0	******	.0	0	.0
P-100	J-58e	J-58f	209.0	6.0	******	.0	0	.0

P-101	J-43g	J-58e	151.0	4.0	******	.0	0	.0
P-102	J-58f	J-58i	57.0	6.0	******	.0	0	.0
P-103	J-58f	J-43m	343.0	4.0	******	.0	0	.0
P-104	J-58i	J-59v	99.0	6.0	******	.0	0	.0
P-105	J-58i	R-1	396.0	10.0	******	.0	0	.0
P-106	J-58k	J-45	203.0	6.0	******	.0	0	.0
P-107	J-58k	J-43o	104.0	4.0	******	.0	0	.0
P-108	J-59u	J-65	464.0	8.0	******	.0	0	.0
P-109	J-59v	J-58k	42.0	6.0	******	.0	0	.0
P-110	J-59v	J-66	114.0	8.0	******	.0	0	.0
P-111	J-59w	J-59u	53.0	8.0	******	.0	0	.0
P-112	J-59w	J-66b	178.0	8.0	******	.0	0	.0
P-113	J-59y	J-59x	25.0	2.0	******	.0	0	.0
P-114	J-59y	J-66l	270.0	8.0	******	.0	0	.0
P-115	J-59	J-59z	95.0	2.0	******	.0	0	.0
P-116	J-59	J-66o	229.0	8.0	******	.0	0	.0
P-117	J-60	J-62	110.0	8.0	******	.0	0	.0
P-118	J-62	J-66u	209.0	8.0	******	.0	0	.0
P-119	J-62	J-59q	125.0	4.0	******	.0	0	.0
P-120	J-63	J-60	282.0	8.0	******	.0	0	.0
P-121	J-63	J-72	111.0	4.0	******	.0	0	.0
P-122	J-64a	J-63	210.0	8.0	******	.0	0	.0
P-123	J-64a	J-59m	84.0	4.0	******	.0	0	.0
P-124	J-64b	J-64a	258.0	8.0	******	.0	0	.0
P-125	J-64b	J-59k	48.0	4.0	******	.0	0	.0
P-126	J-64	J-64b	204.0	8.0	******	.0	0	.0
P-127	J-64	J-59e	72.0	4.0	******	.0	0	.0
P-128	J-65	J-64	186.0	8.0	******	.0	0	.0
P-129	J-65	J-59g	68.0	4.0	******	.0	0	.0
P-130	J-66b	J-66d	242.0	8.0	******	.0	0	.0
P-131	J-66b	J-66a	163.0	4.0	******	.0	0	.0
P-132	J-66d	J-59y	243.0	8.0	******	.0	0	.0
P-133	J-66c	J-66d	149.0	4.0	******	.0	0	.0
P-134	J-66e	J-66f	287.0	8.0	******	.0	0	.0
P-135	J-58m	J-66e	102.0	4.0	******	.0	0	.0
P-136	J-66f	J-66i	119.0	8.0	******	.0	0	.0
P-137	J-66f	J-58p	93.0	4.0	******	.0	0	.0
P-138	J-66i	J-58	200.0	8.0	******	.0	0	.0
P-139	J-66h	J-66i	26.0	4.0	******	.0	0	.0
P-140	J-66h	J-71	300.0	4.0	******	.0	0	.0
P-141	J-66l	J-66e	198.0	8.0	******	.0	0	.0
P-142	J-66l	J-66k	66.0	4.0	******	.0	0	.0
P-143	J-58	J-66n	197.0	8.0	******	.0	0	.0
P-144	J-58	J-58n	50.0	4.0	******	.0	0	.0
P-145	J-66n	J-59	88.0	8.0	******	.0	0	.0
P-146	J-58r	J-66n	55.0	4.0	******	.0	0	.0
P-147	J-66o	J-66p	206.0	8.0	******	.0	0	.0
P-148	J-58t	J-66o	119.0	4.0	******	.0	0	.0
P-149	J-66p	J-61	120.0	8.0	******	.0	0	.0
P-150	J-66p	J-58x	144.0	4.0	******	.0	0	.0
P-151	J-66u	J-66v	210.0	8.0	******	.0	0	.0
P-152	J-66t	J-66u	118.0	4.0	******	.0	0	.0
P-153	J-66v	J-61	98.0	8.0	******	.0	0	.0
P-154	J-66v	J-66r	129.0	4.0	******	.0	0	.0
P-159	J-8a	J-66	1257.0	8.0	******	.0	0	.0
P-160	J-66	J-59w	30.0	8.0	******	.0	0	.0

P-161	J-67	J-17	207.0	6.0	******	.0	0	.0
P-165	J-71	J-58z	161.0	4.0	******	.0	0	.0
P-166	J-72	J-76	201.0	4.0	******	.0	0	.0
P-167	J-44	J-73	138.0	2.0	******	.0	0	.0
P-170	J-76	J-59c	169.0	4.0	******	.0	0	.0
P-171	J-41	J-56	209.0	4.0	******	.0	0	.0

JUNCTION NAME	NODE TITLE	DEMAND (USFU)	FPN PRESSURE
J-1		-50.00	
J-3		.00	
J-4		.00	
J-5		-50.00	
J-6		.00	
J-7		-50.00	
J-8		.00	
J-9		.00	
J-10		.00	
J-11		-50.00	
J-12		-50.00	
J-13		.00	
J-14		.00	
J-15		.00	
J-16		.00	
J-17		-50.00	
J-18		.00	
J-19		-50.00	
J-21		.00	
J-37		.00	
J-41		-50.00	
J-42		.00	
J-43		.00	
J-44		.00	
J-45		.00	
J-46		.00	
J-47		.00	
J-48		.00	
J-49		.00	
J-50		.00	
J-51		.00	
J-52		.00	
J-53		.00	
J-54		.00	
J-55		.00	
J-56		-50.00	
J-58		.00	
J-59		.00	
J-60		.00	
J-61		.00	
J-62		.00	
J-63		.00	
J-64		.00	
J-65		.00	
J-66		.00	

J-67	-50.00
J-71	-50.00
J-72	-50.00
J-73	.00
J-74	-50.00
J-75	-50.00
J-76	-50.00
J-25b	.00
J-38a	.00
J-38b	.00
J-39a	.00
J-42c	-50.00
J-42e	-50.00
J-42g	-50.00
J-42i	-50.00
J-42k	-50.00
J-42m	-50.00
J-42o	-50.00
J-42q	-50.00
J-42s	-50.00
J-42u	-50.00
J-42w	.00
J-42y	.00
J-43c	-50.00
J-43e	-50.00
J-43g	-50.00
J-43m	-50.00
J-43o	-50.00
J-43q	-50.00
J-43s	-50.00
J-43u	.00
J-43v	.00
J-46a	.00
J-58d	.00
J-58e	.00
J-58f	.00
J-58i	.00
J-58k	.00
J-58m	-50.00
J-58n	-50.00
J-58p	-50.00
J-58r	-50.00
J-58t	-50.00
J-58x	-50.00
J-58z	-50.00
J-59c	-50.00
J-59e	-50.00
J-59g	-50.00
J-59k	-50.00
J-59m	-50.00
J-59q	-50.00
J-59u	.00
J-59v	.00
J-59w	.00
J-59x	.00
J-59y	.00

J-59z	.00	
J-64a	.00	
J-64b	.00	
J-66a	-50.00	
J-66b	.00	
J-66c	-50.00	
J-66d	.00	
J-66e	.00	
J-66f	.00	
J-66h	-50.00	
J-66i	.00	
J-66k	-50.00	
J-66l	.00	
J-66n	.00	
J-66o	.00	
J-66p	.00	
J-66r	-50.00	
J-66t	-50.00	
J-66u	.00	
J-66v	.00	
J-8a	.00	
J-9a	-150.00	
R-1	.00	-100.00

==========

========== RESULTS FOR THIS SIMULATION FOLLOW ==========

Solution was obtained in 12 trials
Flow Accuracy = .0000[< .005]
RV Accuracy = .0000[< .001]

PIPE NO.	NODE #1	NODE #2	FLOW (USFU)	LOSS (USPU)	VELOCITY (FT/S)	DENSITY (#/CF)	FRICTION FACTOR	AREA RATIO
P-1	J-1	J-16	50.000	.02	2.57	.126	.0153	.004
P-3	J-3	J-4	100.000	.02	2.89	.126	.0216	.005
P-4	J-4	J-5	-50.000	.02	2.57	.126	.0308	.004
P-5	J-4	J-6	150.000	.06	4.34	.126	.0212	.007
P-6	J-6	J-7	-50.000	.02	2.57	.126	.0285	.004
P-7	J-6	J-37	200.000	.10	5.79	.126	.0221	.010
P-8	J-8	J-8a	550.000	1.40	15.95	.126	.1747	.027
P-9	J-8	J-9	-350.000	.97	10.13	.126	.1775	.017
P-10	J-9	J-9a	-150.000	.56	7.71	.126	.0614	.013
P-11	J-9	J-10	-200.000	.32	5.78	.126	.0847	.010
P-12	J-10	J-11	-50.000	.06	2.57	.126	.0759	.004
P-13	J-10	J-13	-150.000	.18	4.34	.126	.1070	.007
P-14	J-13	J-12	-50.000	.06	2.57	.126	.0869	.004
P-15	J-13	J-14	-100.000	.08	2.89	.126	.0784	.005

P-16	J-14	J-38a	.000	.00	.00	.126	.0000	.000
P-17	J-14	J-67	-100.000	.25	5.14	.126	.0472	.009
P-18	J-16	J-3	100.000	.08	2.89	.126	.1113	.005
P-19	J-16	J-39a	-50.000	.02	1.45	.126	.0874	.002
P-20	J-18	J-19	-50.000	.06	2.57	.126	.1252	.004
P-21	J-18	J-21	.000	.00	.00	.126	.0000	.000
P-41	J-37	J-8	200.000	.32	5.79	.126	.0460	.010
P-43	J-21	J-25b	.000	.00	.00	.126	.0000	.000
P-46	J-38a	J-15	.000	.00	.00	.126	.0000	.000
P-47	J-39a	J-18	-50.000	.02	1.45	.126	.6954	.002
P-48	J-15	J-38b	.000	.00	.00	.126	.0000	.000
P-61	J-43u	J-46a	-248.536	9.16	13.54	.119	.2193	.023
P-62	J-43	J-43v	.000	.00	.00	.119	.0000	.000
P-63	J-43	J-55	251.464	5.20	13.73	.119	.2192	.023
P-64	J-44	J-58e	601.464	72.94	40.81	.096	.2142	.068
P-65	J-45	J-43u	-248.536	5.50	13.69	.118	.2193	.023
P-66	J-43q	J-45	50.000	1.13	6.21	.118	.2572	.010
P-67	J-46a	J-46	-198.536	3.54	10.72	.120	.2213	.018
P-68	J-46a	J-43s	-50.000	1.14	6.08	.120	.1812	.010
P-69	J-46	J-47	-148.536	1.98	7.98	.121	.1774	.013
P-70	J-46	J-74	-50.000	1.13	6.05	.121	.1704	.010
P-71	J-47	J-48	-98.536	.87	5.29	.121	.2360	.009
P-72	J-47	J-42c	-50.000	1.13	6.03	.121	.1608	.010
P-73	J-48	J-49	-48.536	.21	2.60	.121	.2126	.004
P-74	J-48	J-42e	-50.000	1.13	6.03	.121	.1645	.010
P-75	J-49	J-50	1.464	.00	.08	.121	.2007	.000
P-76	J-49	J-42g	-50.000	1.13	6.02	.121	.1778	.010
P-77	J-50	J-51	51.464	.24	2.76	.121	.1843	.005
P-78	J-50	J-42i	-50.000	1.13	6.02	.121	.1735	.010
P-79	J-51	J-52	101.464	.92	5.44	.121	.2026	.009
P-80	J-51	J-42k	-50.000	1.13	6.03	.121	.7737	.010
P-81	J-52	J-53	151.464	2.06	8.14	.121	.1677	.014
P-82	J-52	J-42m	-50.000	1.13	6.03	.121	.2982	.010
P-83	J-53	J-54	201.464	4.10	10.88	.120	.2212	.018
P-84	J-53	J-42s	-50.000	1.27	6.05	.121	.3247	.010
P-85	J-54	J-43	251.464	2.63	13.65	.120	.2192	.023
P-86	J-54	J-42u	-50.000	.52	6.09	.120	.1429	.010
P-87	J-55	J-42w	401.464	11.35	22.19	.117	.2160	.037
P-88	J-55	J-41	-150.000	6.50	18.41	.119	.3101	.031
P-89	J-56	J-42o	-50.000	.72	6.10	.120	.0978	.010
P-91	J-42w	J-42y	451.464	18.01	25.51	.115	.2154	.043
P-92	J-42w	J-42q	-50.000	1.10	6.26	.117	.9952	.011
P-94	J-42y	J-42	501.464	26.25	29.32	.111	.2149	.049
P-95	J-42y	J-75	-50.000	1.29	6.44	.113	.9299	.011
P-96	J-42	J-58d	551.464	14.69	33.31	.107	.2145	.056
P-97	J-42	J-43c	-50.000	.60	6.71	.109	.4433	.011
P-98	J-58d	J-44	601.464	23.84	37.51	.104	.2142	.063
P-99	J-58d	J-43e	-50.000	.82	6.87	.106	.1408	.012
P-100	J-58e	J-58f	651.464	56.80	50.14	.084	.2139	.084
P-101	J-43g	J-58e	50.000	1.60	8.16	.090	.1979	.014
P-102	J-58f	J-58i	701.464	19.50	58.63	.078	.2136	.098
P-103	J-58f	J-43m	-50.000	.49	9.18	.080	.0237	.015
P-104	J-58i	J-59v	-1998.536	226.34	136.72	.095	.2114	.227
P-105	J-58i	R-1	2700.000	129.92	97.87	.064	.1467	.163
P-106	J-58k	J-45	-298.536	8.51	16.61	.117	.2178	.028
P-107	J-58k	J-43o	-50.000	1.22	6.29	.116	.2835	.011

P-108	J-59u	J-65	-537.189	11.47	16.08	.122	.1748	.027
P-109	J-59v	J-58k	-348.536	2.41	19.55	.116	.2168	.033
P-110	J-59v	J-66	-1650.000	27.04	51.18	.118	.1712	.086
P-111	J-59w	J-59u	-537.189	1.32	16.23	.121	.1748	.027
P-112	J-59w	J-66b	-562.810	4.86	16.96	.121	.1746	.028
P-113	J-59y	J-59x	.000	.00	.00	.123	.0000	.000
P-114	J-59y	J-66l	-462.811	4.91	13.66	.124	.1756	.023
P-115	J-59	J-59z	.000	.00	.00	.126	.0000	.000
P-116	J-59	J-66o	-62.811	.09	1.83	.126	.2071	.003
P-117	J-60	J-62	-187.189	.79	5.45	.125	.4312	.009
P-118	J-62	J-66u	-137.189	.43	3.99	.125	.2269	.007
P-119	J-62	J-59q	-50.000	.90	5.82	.125	.1897	.010
P-120	J-63	J-60	-187.189	.79	5.46	.125	.1682	.009
P-121	J-63	J-72	-150.000	11.74	17.37	.126	.3101	.029
P-122	J-64a	J-63	-337.189	2.03	9.85	.125	.1778	.017
P-123	J-64a	J-59m	-50.000	.72	5.85	.125	.2223	.010
P-124	J-64b	J-64a	-387.189	3.28	11.36	.124	.1768	.019
P-125	J-64b	J-59k	-50.000	.88	5.88	.124	.4752	.010
P-126	J-64	J-64b	-437.189	3.31	12.88	.124	.1760	.022
P-127	J-64	J-59e	-50.000	.69	5.90	.124	.2493	.010
P-128	J-65	J-64	-487.189	3.75	14.43	.123	.1753	.024
P-129	J-65	J-59g	-50.000	.63	5.94	.123	.2398	.010
P-130	J-66b	J-66d	-512.810	5.46	15.34	.122	.1751	.026
P-131	J-66b	J-66a	-50.000	.83	6.00	.122	.1300	.010
P-132	J-66d	J-59y	-462.811	4.45	13.75	.123	.1756	.023
P-133	J-66c	J-66d	50.000	.83	5.96	.123	.1432	.010
P-134	J-66e	J-66f	-362.811	3.20	10.60	.125	.1773	.018
P-135	J-58m	J-66e	50.000	.97	5.85	.125	.2494	.010
P-136	J-66f	J-66i	-312.811	.99	9.11	.125	.1784	.015
P-137	J-66f	J-58p	-50.000	.41	5.83	.125	.1142	.010
P-138	J-66i	J-58	-162.811	.27	4.74	.125	.1062	.008
P-139	J-66h	J-66i	150.000	2.76	17.44	.126	.3101	.029
P-140	J-66h	J-71	-100.000	1.22	11.59	.126	.0269	.019
P-141	J-66l	J-66e	-412.811	2.86	12.11	.124	.1764	.020
P-142	J-66l	J-66k	-50.000	.67	5.88	.124	.2646	.010
P-143	J-58	J-66n	-112.811	.21	3.28	.125	.1773	.006
P-144	J-58	J-58n	-50.000	.67	5.82	.126	.3492	.010
P-145	J-66n	J-59	-62.811	.07	1.83	.125	.3969	.003
P-146	J-58r	J-66n	50.000	.66	5.82	.126	.3175	.010
P-147	J-66o	J-66p	-12.811	.00	.37	.126	.1695	.001
P-148	J-58t	J-66o	50.000	.66	5.82	.126	.1467	.010
P-149	J-66p	J-61	37.189	.02	1.08	.126	.2910	.002
P-150	J-66p	J-58x	-50.000	.66	5.82	.126	.1213	.010
P-151	J-66u	J-66v	-87.189	.13	2.54	.126	.1663	.004
P-152	J-66t	J-66u	50.000	.66	5.82	.126	.1480	.010
P-153	J-66v	J-61	-37.189	.02	1.08	.126	.3564	.002
P-154	J-66v	J-66r	-50.000	.66	5.82	.126	.1354	.010
P-159	J-8a	J-66	550.000	32.28	16.33	.123	.1747	.027
P-160	J-66	J-59w	-1100.000	3.10	33.35	.120	.1721	.056
P-161	J-67	J-17	-50.000	.02	2.57	.126	.0187	.004
P-165	J-71	J-58z	-50.000	.10	5.79	.126	.0160	.010
P-166	J-72	J-76	-100.000	.39	11.48	.127	.0129	.019
P-167	J-44	J-73	.000	.00	.00	.102	.0000	.000
P-170	J-76	J-59c	-50.000	.10	5.74	.127	.0153	.010
P-171	J-41	J-56	-100.000	.41	12.21	.120	.0124	.020
R-1	R-1	R-1	-2700.000	.00	.01	.053********		.000

JUNCTION NAME	NODE TITLE	DEMAND (USFU)	PRESSURE (USPU)	PRESSURE (PSIA)	PRESSURE (PSIG)	DENSITY #/CF
J-1		-50.00	317.58	26.17	11.47	.126
J-3		.00	317.48	26.16	11.47	.126
J-4		.00	317.46	26.16	11.47	.126
J-5		-50.00	317.48	26.16	11.47	.126
J-6		.00	317.41	26.16	11.46	.126
J-7		-50.00	317.42	26.16	11.46	.126
J-8		.00	316.99	26.14	11.45	.126
J-9		.00	317.96	26.18	11.48	.126
J-10		.00	318.28	26.19	11.49	.126
J-11		-50.00	318.34	26.19	11.50	.126
J-12		-50.00	318.52	26.20	11.50	.126
J-13		.00	318.45	26.20	11.50	.126
J-14		.00	318.53	26.20	11.50	.126
J-15		.00	318.53	26.20	11.50	.126
J-16		.00	317.56	26.16	11.47	.126
J-17		-50.00	318.80	26.21	11.51	.126
J-18		.00	317.60	26.17	11.47	.126
J-19		-50.00	317.67	26.17	11.47	.126
J-21		.00	317.60	26.17	11.47	.126
J-37		.00	317.31	26.16	11.46	.126
J-41		-50.00	279.81	24.80	10.11	.120
J-42		.00	217.69	22.56	7.86	.109
J-43		.00	278.50	24.75	10.06	.119
J-44		.00	179.16	21.17	6.47	.102
J-45		.00	267.18	24.35	9.65	.117
J-46		.00	285.39	25.00	10.31	.121
J-47		.00	287.36	25.07	10.38	.121
J-48		.00	288.23	25.11	10.41	.121
J-49		.00	288.44	25.11	10.42	.121
J-50		.00	288.44	25.11	10.42	.121
J-51		.00	288.20	25.10	10.41	.121
J-52		.00	287.28	25.07	10.38	.121
J-53		.00	285.23	25.00	10.30	.121
J-54		.00	281.13	24.85	10.15	.120
J-55		.00	273.30	24.57	9.87	.118
J-56		-50.00	280.22	24.82	10.12	.120
J-58		.00	313.39	26.01	11.32	.125
J-59		.00	313.67	26.02	11.33	.126
J-60		.00	312.37	25.98	11.28	.125
J-61		.00	313.74	26.03	11.33	.126
J-62		.00	313.17	26.01	11.31	.125
J-63		.00	311.58	25.95	11.25	.125
J-64		.00	302.96	25.64	10.94	.124
J-65		.00	299.20	25.50	10.81	.123
J-66		.00	283.31	24.93	10.23	.120
J-67		-50.00	318.78	26.21	11.51	.126
J-71		-50.00	317.11	26.15	11.45	.126
J-72		-50.00	323.32	26.37	11.68	.127
J-73		.00	179.16	21.17	6.47	.102

J-74	-50.00	286.52	25.04	10.35	.121
J-75	-50.00	245.24	23.55	8.86	.114
J-76	-50.00	323.71	26.39	11.69	.127
J-25b	.00	317.60	26.17	11.47	.126
J-38a	.00	318.53	26.20	11.50	.126
J-38b	.00	318.53	26.20	11.50	.126
J-39a	.00	317.58	26.17	11.47	.126
J-42c	-50.00	288.49	25.12	10.42	.121
J-42e	-50.00	289.36	25.15	10.45	.121
J-42g	-50.00	289.57	25.15	10.46	.121
J-42i	-50.00	289.57	25.15	10.46	.121
J-42k	-50.00	289.33	25.15	10.45	.121
J-42m	-50.00	288.41	25.11	10.42	.121
J-42o	-50.00	280.94	24.84	10.15	.120
J-42q	-50.00	263.06	24.20	9.50	.117
J-42s	-50.00	286.50	25.04	10.35	.121
J-42u	-50.00	281.65	24.87	10.17	.120
J-42w	.00	261.95	24.16	9.46	.117
J-42y	.00	243.95	23.51	8.81	.113
J-43c	-50.00	218.30	22.58	7.88	.109
J-43e	-50.00	203.82	22.06	7.36	.106
J-43g	-50.00	107.81	18.59	3.89	.090
J-43m	-50.00	49.91	16.50	1.80	.080
J-43o	-50.00	259.89	24.08	9.39	.116
J-43q	-50.00	268.31	24.39	9.69	.118
J-43s	-50.00	282.98	24.92	10.22	.120
J-43u	.00	272.68	24.54	9.85	.118
J-43v	.00	278.50	24.75	10.06	.119
J-46a	.00	281.84	24.87	10.18	.120
J-58d	.00	203.00	22.03	7.33	.106
J-58e	.00	106.22	18.53	3.84	.089
J-58f	.00	49.42	16.48	1.79	.079
J-58i	.00	29.92	15.78	1.08	.076
J-58k	.00	258.67	24.04	9.34	.116
J-58m	-50.00	309.91	25.89	11.19	.125
J-58n	-50.00	314.06	26.04	11.34	.126
J-58p	-50.00	312.54	25.98	11.29	.125
J-58r	-50.00	314.27	26.05	11.35	.126
J-58t	-50.00	314.43	26.05	11.36	.126
J-58x	-50.00	314.43	26.05	11.36	.126
J-58z	-50.00	317.21	26.15	11.46	.126
J-59c	-50.00	323.81	26.39	11.69	.127
J-59e	-50.00	303.65	25.66	10.97	.124
J-59g	-50.00	299.84	25.52	10.83	.123
J-59k	-50.00	307.14	25.79	11.09	.124
J-59m	-50.00	310.26	25.90	11.21	.125
J-59q	-50.00	314.07	26.04	11.34	.126
J-59u	.00	287.73	25.09	10.39	.121
J-59v	.00	256.26	23.95	9.26	.116
J-59w	.00	286.41	25.04	10.34	.121
J-59x	.00	301.17	25.57	10.88	.123
J-59y	.00	301.17	25.57	10.88	.123
J-59z	.00	313.67	26.02	11.33	.126
J-64a	.00	309.55	25.88	11.18	.125
J-64b	.00	306.27	25.76	11.06	.124
J-66a	-50.00	292.10	25.25	10.55	.122

J-66b	.00	291.27	25.22	10.52	.122
J-66c	-50.00	297.55	25.44	10.75	.123
J-66d	.00	296.72	25.41	10.72	.123
J-66e	.00	308.93	25.85	11.16	.125
J-66f	.00	312.14	25.97	11.27	.125
J-66h	-50.00	315.89	26.10	11.41	.126
J-66i	.00	313.13	26.00	11.31	.125
J-66k	-50.00	306.75	25.77	11.08	.124
J-66l	.00	306.07	25.75	11.05	.124
J-66n	.00	313.61	26.02	11.33	.126
J-66o	.00	313.76	26.03	11.33	.126
J-66p	.00	313.76	26.03	11.33	.126
J-66r	-50.00	314.38	26.05	11.35	.126
J-66t	-50.00	314.26	26.05	11.35	.126
J-66u	.00	313.59	26.02	11.33	.126
J-66v	.00	313.72	26.03	11.33	.126
J-8a	.00	315.59	26.09	11.40	.126
J-9a	-150.00	318.52	26.20	11.50	.126
R-1	.00	-100.00	11.09	-3.61	.053

* This designates the use of default density in a low pressure region

THE NET SYSTEM DEMAND (USFU) = -2700.000

SUMMARY OF INFLOWS(+).AND.OUTFLOWS(-) :

NAME	FLOW (USFU)	FPN TITLE
R-1	-2700.0	R-1

MAXIMUM MACH NUMBER = .18 IN LINE NO.P-104

SUMMARY OF MINIMUM.AND.MAXIMUM VELOCITIES (FT/S)

MINIMUM		MAXIMUM	
R-1	.01	P-104	136.72
P-75	.08	P-105	97.87
P-147	.37	P-102	58.63
P-149	1.08	P-110	51.18
P-153	1.08	P-100	50.14

SUMMARY OF MINIMUM.AND.MAXIMUM LOSS/1000. (PSI)

MINIMUM		MAXIMUM	
P-75	.00	P-104	82.56
P-147	.00	P-102	12.35
P-1	.00	P-105	11.85
P-161	.00	P-100	9.81

P-3	.00	P-110	8.57

SUMMARY OF MINIMUM.AND.MAXIMUM PRESSURES (USPU)

	MINIMUM		MAXIMUM
R-1	-100.00	J-59c	323.81
J-58i	29.92	J-76	323.71
J-58f	49.42	J-72	323.32
J-43m	49.91	J-17	318.80
J-58e	106.22	J-67	318.78

********** END OF KYGAS SIMULATION **********

DATE FOR THIS COMPUTER RUN : 10-15-2010
START TIME FOR THIS COMPUTER RUN : 10:17:54:83

4.3 PRESSURE DISTRIBUTION
RADIAL COLLECTOR

THIS PAGE INTENTIONALLY LEFT BLANK

Unit 3 Expansion - Wayne County Landfill

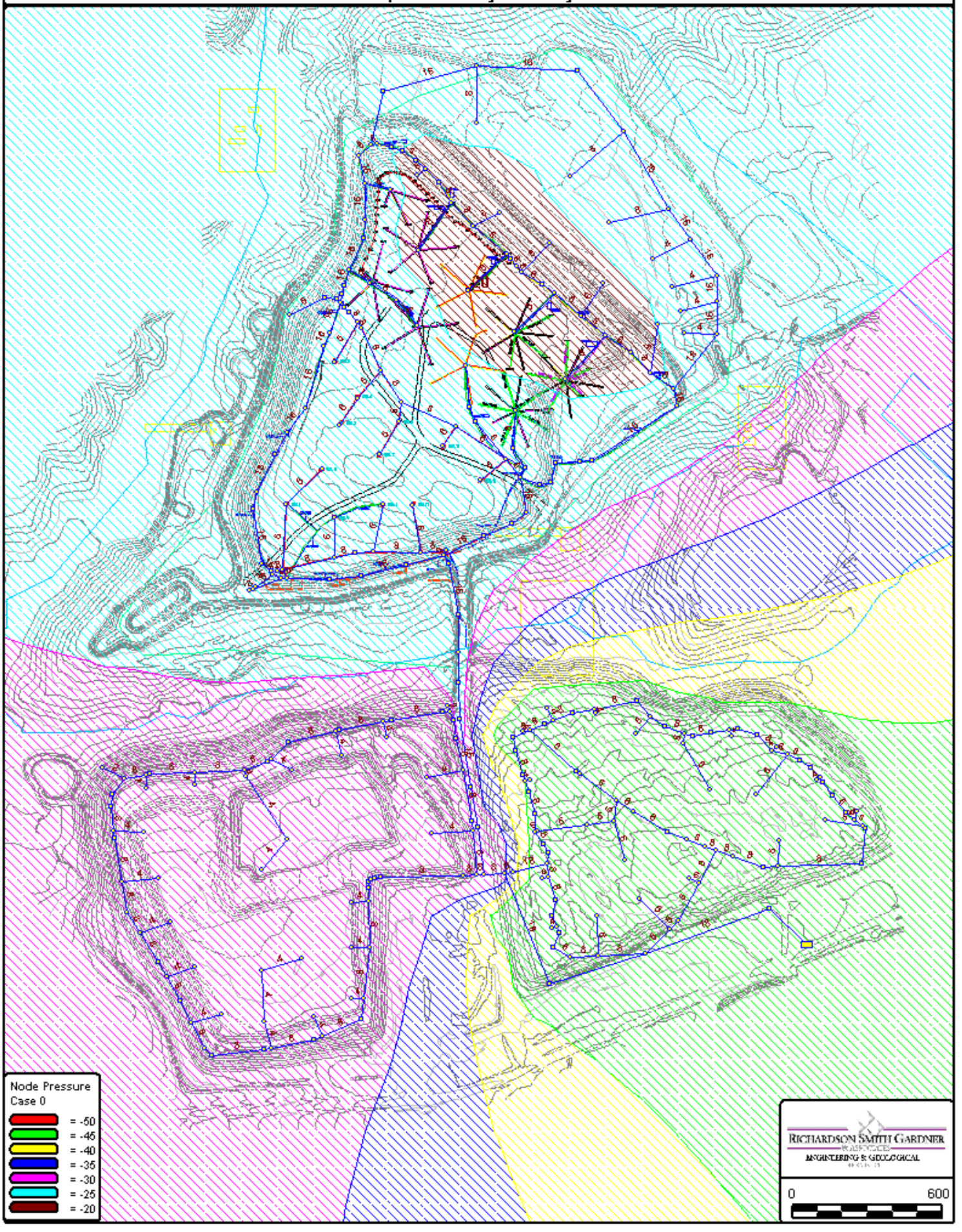

THIS PAGE INTENTIONALLY LEFT BLANK

```
***  GAS2008 Version 1.0 ***
GAS DISTRIBUTION NETWORK ANALYSIS
COPYRIGHT 2007 - DON J. WOOD, SRINI LINGIEDDY
LEXINGTON, KY
Updated March 2007


INPUT DATA FILE NAME FOR THIS SIMULATION  = H:\Projects\METHAN~1\MPWAYN~1\GCCSD
E~1\CALCUL~1\KYPIPE~1\REVISE~1\Unit_3_E.DAT
OUTPUT DATA FILE NAME FOR THIS SIMULATION = H:\Projects\METHAN~1\MPWAYN~1\GCCSD
E~1\CALCUL~1\KYPIPE~1\REVISE~1\Unit_3_E.OT2

DATE FOR THIS COMPUTER RUN       :  3-19-2012
START TIME FOR THIS COMPUTER RUN :  9: 1:42:10


SUMMARY OF DISTRIBUTION SYSTEM CHARACTERISTICS:
-----------------------------------------------


NUMBER OF PIPES           =   207
NUMBER OF JUNCTION NODES  =   197

UNITS SPECIFIED           = ENGLISH



PROPERTIES OF THE GAS FOR THIS ANALYSIS ARE:

 OPERATING TEMPERATURE                =     100.00 DEGREES FAHRENHEIT
 REFERENCE DENSITY (@ STD. PRESSURE) =    .71E-01 POUNDS / CUBIC FOOT
 GAS MOLECULAR WEIGHT                =      28.97
 GAS SPECIFIC GRAVITY                =       1.00
 RATIO OF SPECIFIC HEATS             =       1.00
 GAS CONSTANT                        =      53.34
 ABSOLUTE VISCOSITY                  =    .88E-05 POUND SECONDS/SQUARE FOOT


USER SPECIFIED FLOW UNITS (USFU)     = SCF / MIN.
USER SPECIFIED PRESSURE UNITS (USPU) = INCHES OF WATER (GAUGE)


-------  SUMMARY OF PIPE NETWORK GEOMETRIC AND OPERATING DATA  -------
```

PIPE NAME	NODE #1	NODE #2	LENGTH (FT.)	DIAM. (IN.)	ROUGHNESS (MILLIFEET)	SUM-M FACT.	PUMP ID	ELEVATION CHANGE
P-1	J-1	J-44	128.0	6.0	******	.0	0	.0
P-2	J-44	J-16	145.0	6.0	******	.0	0	.0
P-3	J-3	J-4	239.0	8.0	******	.0	0	.0
P-4	J-4	J-5	94.0	6.0	******	.0	0	.0
P-5	J-4	J-6	244.0	8.0	******	.0	0	.0
P-6	J-7	J-66	80.0	8.0	******	.0	0	.0
P-7	J-6	J-80	92.0	8.0	******	.0	0	.0

Wayne County - Expansion

P-8	J-38	J-86	22.0	16.0	******	.0	0	.0
P-9	J-8	J-9	103.0	8.0	******	.0	0	.0
P-10	J-9	J-9a	192.0	6.0	******	[illegible]	[illegible]	[illegible]

P-64	J-80b	R-1	741.0	18.0	******	.0	0	.0
P-65	J-42	J-82	145.0	8.0	******	.0	0	.0
P-66	J-59v	J-42	143.0	18.0	******	.0	0	.0
P-67	J-43o	J-77	25.0	4.0	******	.0	0	.0
P-68	J-43	J-83c	28.0	8.0	******	.0	0	.0
P-69	J-43	J-43e	7.0	4.0	******	.0	0	.0
P-70	J-45	J-43	234.0	8.0	******	.0	0	.0
P-71	J-45	J-43g	22.0	4.0	******	.0	0	.0
P-72	J-46	J-43m	203.0	6.0	******	.0	0	.0
P-73	J-43m	J-47	110.0	6.0	******	.0	0	.0
P-74	J-47	J-58h	161.0	6.0	******	.0	0	.0
P-75	J-48	J-52	179.0	8.0	******	.0	0	.0
P-76	J-47	J-48	82.0	6.0	******	.0	0	.0
P-77	J-49	J-80b	190.0	8.0	******	.0	0	.0
P-78	J-49	J-43s	163.0	6.0	******	.0	0	.0
P-79	J-50	J-80c	45.0	8.0	******	.0	0	.0
P-80	J-50	J-74	170.0	6.0	******	.0	0	.0
P-81	J-51a	J-80a	167.0	8.0	******	.0	0	.0
P-82	J-43q	J-51a	19.0	4.0	******	.0	0	.0
P-83	J-51b	J-80d	48.0	8.0	******	.0	0	.0
P-84	J-80c	J-51c	176.0	8.0	******	.0	0	.0
P-85	J-51c	J-51b	147.0	8.0	******	.0	0	.0
P-86	J-51c	J-42c	41.0	6.0	******	.0	0	.0
P-87	J-51d	J-51	185.0	8.0	******	.0	0	.0
P-88	J-56	J-41	215.0	6.0	******	.0	0	.0
P-89	J-51g	J-51h	162.0	8.0	******	.0	0	.0
P-90	J-42o	J-51g	205.0	6.0	******	.0	0	.0
P-91	J-51d	J-42g	102.0	6.0	******	.0	0	.0
P-92	J-51l	J-51k	157.0	8.0	******	.0	0	.0
P-93	J-42q	J-51l	87.0	6.0	******	.0	0	.0
P-94	J-42i	J-51e	149.0	6.0	******	.0	0	.0
P-95	J-57	J-51l	253.0	8.0	******	.0	0	.0
P-96	J-51e	J-51d	493.0	8.0	******	.0	0	.0
P-97	J-51f	J-51e	43.0	8.0	******	.0	0	.0
P-98	J-51f	J-42k	35.0	6.0	******	.0	0	.0
P-99	J-51h	J-83a	173.0	8.0	******	.0	0	.0
P-100	J-42m	J-51h	13.0	4.0	******	.0	0	.0
P-101	J-51i	J-51g	66.0	8.0	******	.0	0	.0
P-102	J-42s	J-51i	23.0	4.0	******	.0	0	.0
P-103	J-51j	J-51i	201.0	8.0	******	.0	0	.0
P-104	J-42u	J-51j	25.0	4.0	******	.0	0	.0
P-105	J-51k	J-51j	183.0	8.0	******	.0	0	.0
P-106	J-41	J-51k	40.0	6.0	******	.0	0	.0
P-107	J-52	J-83c	267.0	8.0	******	.0	0	.0
P-108	J-59u	J-65	464.0	8.0	******	.0	0	.0
P-109	J-53	J-48	79.0	8.0	******	.0	0	.0
P-110	J-59v	J-7	34.0	8.0	******	.0	0	.0
P-111	J-59w	J-59u	53.0	8.0	******	.0	0	.0
P-112	J-59w	J-66b	178.0	8.0	******	.0	0	.0
P-113	J-59y	J-59x	25.0	2.0	******	.0	0	.0
P-114	J-59y	J-66l	270.0	8.0	******	.0	0	.0
P-115	J-59	J-59z	95.0	2.0	******	.0	0	.0
P-116	J-59	J-66o	229.0	8.0	******	.0	0	.0
P-117	J-60	J-62	110.0	8.0	******	.0	0	.0
P-118	J-62	J-66u	209.0	8.0	******	.0	0	.0
P-119	J-62	J-59q	125.0	4.0	******	.0	0	.0

P-120	J-63	J-60	282.0	8.0	******	.0	0	.0
P-121	J-63	J-72	111.0	4.0	******	.0	0	.0
P-122	J-64a	J-63	210.0	8.0	******	.0	0	.0
P-123	J-64a	J-59m	84.0	4.0	******	.0	0	.0
P-124	J-64b	J-64a	258.0	8.0	******	.0	0	.0
P-125	J-64b	J-59k	48.0	4.0	******	.0	0	.0
P-126	J-64	J-64b	204.0	8.0	******	.0	0	.0
P-127	J-64	J-59e	72.0	4.0	******	.0	0	.0
P-128	J-65	J-64	186.0	8.0	******	.0	0	.0
P-129	J-65	J-59g	68.0	4.0	******	.0	0	.0
P-130	J-66b	J-66d	242.0	8.0	******	.0	0	.0
P-131	J-66b	J-66a	163.0	4.0	******	.0	0	.0
P-132	J-66d	J-59y	243.0	8.0	******	.0	0	.0
P-133	J-66c	J-66d	149.0	4.0	******	.0	0	.0
P-134	J-66e	J-66f	287.0	8.0	******	.0	0	.0
P-135	J-58m	J-66e	102.0	4.0	******	.0	0	.0
P-136	J-66f	J-66i	119.0	8.0	******	.0	0	.0
P-137	J-66f	J-58p	93.0	4.0	******	.0	0	.0
P-138	J-66i	J-58	200.0	8.0	******	.0	0	.0
P-139	J-66h	J-66i	26.0	4.0	******	.0	0	.0
P-140	J-66h	J-71	300.0	4.0	******	.0	0	.0
P-141	J-66l	J-66e	198.0	8.0	******	.0	0	.0
P-142	J-66l	J-66k	66.0	4.0	******	.0	0	.0
P-143	J-58	J-66n	197.0	8.0	******	.0	0	.0
P-144	J-58	J-58n	50.0	4.0	******	.0	0	.0
P-145	J-66n	J-59	88.0	8.0	******	.0	0	.0
P-146	J-58r	J-66n	55.0	4.0	******	.0	0	.0
P-147	J-66o	J-66p	206.0	8.0	******	.0	0	.0
P-148	J-58t	J-66o	119.0	4.0	******	.0	0	.0
P-149	J-66p	J-61	120.0	8.0	******	.0	0	.0
P-150	J-66p	J-58x	144.0	4.0	******	.0	0	.0
P-151	J-66u	J-66v	210.0	8.0	******	.0	0	.0
P-152	J-66t	J-66u	118.0	4.0	******	.0	0	.0
P-153	J-66v	J-61	98.0	8.0	******	.0	0	.0
P-154	J-66v	J-66r	129.0	4.0	******	.0	0	.0
P-155	J-27	J-40	158.0	8.0	******	.0	0	.0
P-156	J-66x	J-95	115.0	8.0	******	.0	0	.0
P-157	J-87	J-38	643.0	16.0	******	.0	0	.0
P-158	J-8	J-87	24.0	8.0	******	.0	0	.0
P-159	J-2	J-87	397.0	16.0	******	.0	0	.0
P-160	J-66	J-59w	30.0	8.0	******	.0	0	.0
P-161	J-67	J-17	202.0	6.0	******	.0	0	.0
P-162	J-68	J-20	124.0	16.0	******	.0	0	.0
P-163	J-69	J-39g	124.0	8.0	******	.0	0	.0
P-164	J-88	J-80	759.0	16.0	******	.0	0	.0
P-165	J-71	J-58z	161.0	4.0	******	.0	0	.0
P-166	J-72	J-76	201.0	4.0	******	.0	0	.0
P-167	J-34	J-31	170.0	8.0	******	.0	0	.0
P-168	J-54	J-53	247.0	8.0	******	.0	0	.0
P-169	J-55	J-57	172.0	8.0	******	.0	0	.0
P-170	J-76	J-59c	169.0	4.0	******	.0	0	.0
P-171	J-43c	J-55	55.0	4.0	******	.0	0	.0
P-172	J-51	J-51b	74.0	8.0	******	.0	0	.0
P-173	J-77	J-42	52.0	8.0	******	.0	0	.0
P-174	J-82	J-46	7.0	6.0	******	.0	0	.0
P-175	J-82	J-45	206.0	8.0	******	.0	0	.0

P-176	J-83a	J-51f	44.0	8.0	******	.0	0	.0
P-177	J-83c	J-55	100.0	8.0	******	.0	0	.0
P-178	J-77	J-51a	208.0	8.0	******	.0	0	.0
P-179	J-80a	J-49	113.0	8.0	******	.0	0	.0
P-180	J-80b	J-50	139.0	8.0	******	.0	0	.0
P-181	J-80d	J-54	76.0	8.0	******	.0	0	.0
P-182	J-75	J-57	16.0	4.0	******	.0	0	.0
P-183	J-34	J-89	44.0	8.0	******	.0	0	.0
P-184	J-90	J-28	181.0	8.0	******	.0	0	.0
P-185	J-90	J-91	119.0	8.0	******	.0	0	.0
P-186	J-92	J-70	125.0	8.0	******	.0	0	.0
P-187	J-92	J-93	159.0	8.0	******	.0	0	.0
P-188	J-27	J-94	165.0	8.0	******	.0	0	.0
P-189	J-95	J-97	112.0	8.0	******	.0	0	.0
P-190	J-95	J-96	195.0	8.0	******	.0	0	.0
P-191	J-97	J-88	71.0	16.0	******	.0	0	.0
P-192	J-97	J-110	279.0	16.0	******	.0	0	.0
P-193	J-98	J-391	609.0	16.0	******	.0	0	.0
P-194	J-98	J-99	229.0	8.0	******	.0	0	.0
P-195	J-100	J-98	710.0	16.0	******	.0	0	.0
P-196	J-100	J-32	280.0	8.0	******	.0	0	.0
P-197	J-102	J-100	361.0	16.0	******	.0	0	.0
P-198	J-102	J-103	247.0	8.0	******	.0	0	.0
P-199	J-105	J-102	154.0	16.0	******	.0	0	.0
P-200	J-105	J-104	168.0	4.0	******	.0	0	.0
P-201	J-106	J-105	180.0	16.0	******	.0	0	.0
P-202	J-106	J-107	185.0	4.0	******	.0	0	.0
P-203	J-108	J-106	101.0	16.0	******	.0	0	.0
P-204	J-108	J-109	148.0	4.0	******	.0	0	.0
P-205	J-110	J-108	132.0	16.0	******	.0	0	.0
P-206	J-110	J-111	130.0	4.0	******	.0	0	.0

JUNCTION NAME	NODE TITLE	DEMAND (USFU)	FPN PRESSURE
J-1		-4.00	
J-2		.00	
J-3		.00	
J-4		.00	
J-5		-4.00	
J-6		.00	
J-7		.00	
J-8		.00	
J-9		.00	
J-10		.00	
J-11		-4.00	
J-12		-4.00	
J-13		.00	
J-14		.00	
J-15		.00	
J-16		.00	
J-17		-4.00	
J-18		.00	
J-19		-4.00	
J-20		.00	

J-21	.00
J-22	.00
J-23	.00
J-24	.00
J-25	.00
J-26	.00
J-27	.00
J-28	.00
J-29	-56.00
J-30	-56.00
J-31	.00
J-32	-56.00
J-33	.00
J-34	.00
J-35	-56.00
J-36	-56.00
J-37	.00
J-38	.00
J-39	.00
J-40	.00
J-41	.00
J-42	.00
J-43	.00
J-44	-4.00
J-45	.00
J-46	-4.00
J-47	.00
J-48	.00
J-49	.00
J-50	.00
J-51	-4.00
J-52	-4.00
J-53	-4.00
J-54	-4.00
J-55	.00
J-56	-4.00
J-57	.00
J-58	.00
J-59	.00
J-60	.00
J-61	.00
J-62	.00
J-63	.00
J-64	.00
J-65	.00
J-66	.00
J-67	-4.00
J-68	.00
J-69	-4.00
J-70	.00
J-71	-4.00
J-72	-4.00
J-73	.00
J-74	-4.00
J-75	-4.00
J-76	-4.00

Wayne County - Expansion	
J-77	.00
J-78	.00
J-79	-4.00
J-80	.00

J-43g	-4.00
J-43m	-4.00
J-43o	-4.00
J-43q	-4.00
J-43s	-4.00
J-51a	.00
J-51b	.00
J-51c	.00
J-51d	.00
J-51e	.00
J-51f	.00
J-51g	.00
J-51h	.00
J-51i	.00
J-51j	.00
J-51k	.00
J-51l	.00
J-58h	-4.00
J-58m	-4.00
J-58n	-4.00
J-58p	-4.00
J-58r	-4.00
J-58t	-4.00
J-58x	-4.00
J-58z	-4.00
J-59c	-4.00
J-59e	-4.00
J-59g	-4.00
J-59k	-4.00
J-59m	-4.00
J-59q	-4.00
J-59u	.00
J-59v	.00
J-59w	.00
J-59x	.00
J-59y	.00
J-59z	.00
J-64a	.00
J-64b	.00
J-66a	-4.00
J-66b	.00
J-66c	-4.00
J-66d	.00
J-66e	.00
J-66f	.00
J-66h	-4.00
J-66i	.00
J-66k	-4.00
J-66l	.00
J-66n	.00
J-66o	.00
J-66p	.00
J-66r	-4.00
J-66t	-4.00
J-66u	.00
J-66v	.00

J-66x	-4.00	
J-80a	.00	
J-80b	.00	
J-80c	.00	
J-80d	.00	
J-83a	.00	
J-83c	.00	
J-9a	-12.00	
R-1	.00	-50.00

==========

========== RESULTS FOR THIS SIMULATION FOLLOW ==========

Solution was obtained in 16 trials
Flow Accuracy = .0001[< .005]
RV Accuracy = .0000[< .001]

PIPE NO.	NODE #1	NODE #2	FLOW (USFU)	LOSS (USPU)	VELOCITY (FT/S)	DENSITY (#/CF)	FRICTION FACTOR	AREA RATIO
P-1	J-1	J-44	4.000	.00	.39	.066	.0251	.001
P-2	J-44	J-16	8.000	.00	.78	.066	.0222	.001
P-3	J-3	J-4	52.312	.01	2.89	.066	.0180	.005
P-4	J-4	J-5	-4.000	.00	.39	.066	.0342	.001
P-5	J-4	J-6	56.312	.01	3.11	.066	.0176	.005
P-6	J-7	J-66	-1068.000	14.74	61.00	.064	.1722	.102
P-7	J-6	J-80	116.312	.17	6.42	.066	.1503	.011
P-8	J-38	J-86	-264.444	.05	3.65	.066	1.2569	.006
P-9	J-8	J-9	-52.184	.03	2.88	.066	.1342	.005
P-10	J-9	J-9a	-12.000	.01	1.18	.066	.0540	.002
P-11	J-9	J-10	-40.184	.02	2.22	.066	.0732	.004
P-12	J-10	J-11	-4.000	.00	.39	.066	.0532	.001
P-13	J-10	J-13	-36.184	.02	2.00	.066	.0886	.003
P-14	J-13	J-12	-4.000	.00	.39	.066	.0644	.001
P-15	J-13	J-14	-32.184	.01	1.78	.066	.0637	.003
P-16	J-14	J-38a	-44.496	.02	2.46	.066	.7277	.004
P-17	J-14	J-67	-8.000	.00	.79	.066	.0396	.001
P-18	J-16	J-3	44.312	.02	2.44	.066	.0922	.004
P-19	J-16	J-39a	-36.312	.02	2.00	.066	.0724	.003
P-20	J-18	J-19	-4.000	.00	.39	.066	.0567	.001
P-21	J-18	J-21	-32.312	.01	1.78	.066	.1280	.003
P-22	J-73	J-15	.000	.00	.00	.066	.0000	.000
P-23	J-21	J-22	.000	.00	.00	.066	.0000	.000
P-24	J-20	J-39b	-308.940	.07	4.26	.066	.1084	.007
P-25	J-21	J-23	308.940	.07	4.26	.066	.2144	.007
P-26	J-21	J-25a	-341.252	.09	4.70	.066	.2064	.008
P-27	J-33	J-25a	225.252	.04	3.10	.066	.1280	.005
P-28	J-24	J-24b	-4.000	.00	.22	.066	.1304	.000

P-29	J-24	J-39	-221.252	.04	3.05	.066	.2426	.005
P-30	J-26	J-27	-17.648	.00	.96	.067	.4609	.002
P-31	J-40	J-92	94.352	.11	5.14	.067	.0988	.009
P-32	J-28	J-26	-17.648	.00	.96	.067	.2267	.002
P-33	J-28	J-30	-56.000	.12	5.42	.067	.0487	.009
P-34	J-31	J-90	-129.648	.21	7.07	.067	.1089	.012
P-35	J-31	J-112	-56.000	.04	3.05	.067	.0593	.005
P-36	J-33	J-24	-225.252	.04	3.10	.066	.1894	.005
P-37	J-40	J-29	-56.000	.04	3.05	.067	.0626	.005
P-38	J-70	J-66x	206.352	.53	11.28	.067	.1133	.019
P-39	J-70	J-84	-56.000	.04	3.06	.067	.0574	.005
P-40	J-80	J-37	643.060	.20	8.87	.066	.1179	.015
P-41	J-87	J-37	-643.060	.52	8.88	.066	.1179	.015
P-42	J-25a	J-39g	-116.000	.27	6.39	.066	.2250	.011
P-43	J-38	J-14	-20.312	.01	1.12	.066	.5129	.002
P-44	J-25	J-39d	-308.940	.12	4.27	.066	.1500	.007
P-45	J-25	J-73	308.940	.12	4.27	.066	.7351	.007
P-46	J-38a	J-73	-44.496	.04	2.46	.066	.8821	.004
P-47	J-39a	J-18	-36.312	.03	2.00	.066	.8821	.003
P-48	J-15	J-38b	.000	.00	.00	.066	.0000	.000
P-49	J-6	J-79	-4.000	.00	.39	.066	.1234	.001
P-50	J-3	J-85	-8.000	.00	.78	.066	.2205	.001
P-51	J-39b	J-23	-308.940	.12	4.26	.066	.7230	.007
P-52	J-80	J-83	-56.000	.06	3.09	.066	.0774	.005
P-53	J-39d	J-68	-308.940	.12	4.26	.066	.1658	.007
P-54	J-35	J-69	56.000	.06	3.08	.066	.1658	.005
P-55	J-85	J-81	-4.000	.00	.39	.066	.1081	.001
P-56	J-86	J-78	.000	.00	.00	.066	.0000	.000
P-57	J-39k	J-34	-241.648	2.16	13.27	.067	.1809	.022
P-58	J-39l	J-39k	-241.648	.24	13.31	.066	.1809	.022
P-59	J-39	J-39l	-221.252	.20	12.19	.066	.0685	.020
P-60	J-73	J-86	264.444	.02	3.65	.066	.2319	.006
P-61	J-2	J-66	980.000	2.82	13.64	.066	.1150	.023
P-62	J-6	J-36	-56.000	.15	3.09	.066	.1215	.005
P-63	J-7	J-80b	989.862	1.56	11.40	.063	.1088	.019
P-64	J-80b	R-1	1168.000	1.81	13.51	.062	.1078	.023
P-65	J-42	J-82	2.052	.00	.12	.063	.2449	.000
P-66	J-59v	J-42	78.138	.01	.90	.063	.5588	.002
P-67	J-43o	J-77	4.000	.01	.93	.063	.7102	.002
P-68	J-43	J-83c	9.313	.00	.54	.063	1.2683	.001
P-69	J-43	J-43e	-4.000	.01	.93	.063	2.5366	.002
P-70	J-45	J-43	5.313	.00	.31	.063	.1518	.001
P-71	J-45	J-43g	-4.000	.01	.93	.063	.8071	.002
P-72	J-46	J-43m	4.740	.00	.49	.063	.1312	.001
P-73	J-43m	J-47	8.740	.01	.90	.063	.2421	.002
P-74	J-47	J-58h	-4.000	.00	.41	.063	.1654	.001
P-75	J-48	J-52	-20.740	.01	1.21	.063	.1984	.002
P-76	J-47	J-48	12.740	.02	1.32	.063	.3248	.002
P-77	J-49	J-80b	88.086	.26	5.14	.063	.1869	.009
P-78	J-49	J-43s	-4.000	.00	.42	.063	.1634	.001
P-79	J-50	J-80c	-86.052	.25	5.02	.063	.7891	.008
P-80	J-50	J-74	-4.000	.00	.42	.063	.1567	.001
P-81	J-51a	J-80a	84.086	.24	4.90	.063	.2126	.008
P-82	J-43q	J-51a	4.000	.01	.93	.063	.9345	.002
P-83	J-51b	J-80d	-41.480	.06	2.42	.063	.7398	.004
P-84	J-80c	J-51c	-86.052	.25	5.02	.063	.2018	.008

P-85	J-51c	J-51b	-82.052	.23	4.78	.063	.2416	.008
P-86	J-51c	J-42c	-4.000	.00	.41	.063	.6496	.001
P-87	J-51d	J-51	36.572	.05	2.13	.063	.1920	.004
P-88	J-56	J-41	4.000	.00	.41	.063	.1239	.001
P-89	J-51g	J-51h	20.572	.01	1.20	.063	.2192	.002
P-90	J-42o	J-51g	4.000	.00	.41	.063	.1299	.001
P-91	J-51d	J-42g	-4.000	.00	.41	.063	.2611	.001
P-92	J-51l	J-51k	4.572	.00	.27	.063	.2262	.000
P-93	J-42q	J-51l	4.000	.00	.41	.063	.3061	.001
P-94	J-42i	J-51e	4.000	.00	.41	.063	.1788	.001
P-95	J-57	J-51l	.572	.00	.03	.063	.1404	.000
P-96	J-51e	J-51d	32.572	.04	1.90	.063	.0720	.003
P-97	J-51f	J-51e	28.572	.03	1.66	.063	.8259	.003
P-98	J-51f	J-42k	-4.000	.00	.41	.063	.7610	.001
P-99	J-51h	J-83a	24.572	.02	1.43	.063	.2053	.002
P-100	J-42m	J-51h	4.000	.01	.93	.063	1.3658	.002
P-101	J-51i	J-51g	16.572	.01	.96	.063	.5381	.002
P-102	J-42s	J-51i	4.000	.01	.93	.063	.7720	.002
P-103	J-51j	J-51i	12.572	.01	.73	.063	.1767	.001
P-104	J-42u	J-51j	4.000	.01	.93	.063	.7102	.002
P-105	J-51k	J-51j	8.572	.00	.50	.063	.1941	.001
P-106	J-41	J-51k	4.000	.00	.41	.063	.6658	.001
P-107	J-52	J-83c	-16.740	.01	.97	.063	.1330	.002
P-108	J-59u	J-65	-43.478	.06	2.43	.065	.0765	.004
P-109	J-53	J-48	-33.480	.04	1.95	.063	.4495	.003
P-110	J-59v	J-7	-78.138	.21	4.55	.063	1.0444	.008
P-111	J-59w	J-59u	-43.478	.06	2.43	.065	.6700	.004
P-112	J-59w	J-66b	-44.522	.06	2.49	.065	.1995	.004
P-113	J-59y	J-59x	.000	.00	.00	.065	.0000	.000
P-114	J-59y	J-66l	-36.522	.04	2.04	.065	.1315	.003
P-115	J-59	J-59z	.000	.00	.00	.065	.0000	.000
P-116	J-59	J-66o	-4.522	.00	.25	.065	.1551	.000
P-117	J-60	J-62	-15.478	.01	.86	.065	.3228	.001
P-118	J-62	J-66u	-11.478	.00	.64	.065	.1699	.001
P-119	J-62	J-59q	-4.000	.01	.89	.065	.1420	.001
P-120	J-63	J-60	-15.478	.01	.86	.065	.1259	.001
P-121	J-63	J-72	-12.000	.07	2.68	.065	.1600	.004
P-122	J-64a	J-63	-27.478	.02	1.53	.065	.1691	.003
P-123	J-64a	J-59m	-4.000	.01	.89	.065	.2114	.001
P-124	J-64b	J-64a	-31.478	.03	1.76	.065	.1376	.003
P-125	J-64b	J-59k	-4.000	.01	.89	.065	.3699	.001
P-126	J-64	J-64b	-35.478	.04	1.98	.065	.1741	.003
P-127	J-64	J-59e	-4.000	.01	.89	.065	.2466	.001
P-128	J-65	J-64	-39.478	.05	2.20	.065	.1909	.004
P-129	J-65	J-59g	-4.000	.01	.89	.065	.2611	.001
P-130	J-66b	J-66d	-40.522	.05	2.26	.065	.1467	.004
P-131	J-66b	J-66a	-4.000	.01	.89	.065	.1089	.001
P-132	J-66d	J-59y	-36.522	.04	2.04	.065	.1461	.003
P-133	J-66c	J-66d	4.000	.01	.89	.065	.1192	.001
P-134	J-66e	J-66f	-28.522	.03	1.59	.065	.1237	.003
P-135	J-58m	J-66e	4.000	.01	.89	.065	.1741	.001
P-136	J-66f	J-66i	-24.522	.02	1.37	.065	.2984	.002
P-137	J-66f	J-58p	-4.000	.01	.89	.065	.1909	.001
P-138	J-66i	J-58	-12.522	.01	.70	.065	.1776	.001
P-139	J-66h	J-66i	12.000	.07	2.68	.065	.6829	.004
P-140	J-66h	J-71	-8.000	.03	1.79	.065	.0592	.003

P-141	J-66l	J-66e	-32.522	.03	1.82	.065	.1794	.003
P-142	J-66l	J-66k	-4.000	.01	.89	.065	.2690	.001
P-143	J-58	J-66n	-8.522	.00	.48	.065	.1803	.001
P-144	J-58	J-58n	-4.000	.01	.89	.065	.3551	.001
P-145	J-66n	J-59	-4.522	.00	.25	.065	.4035	.000
P-146	J-58r	J-66n	4.000	.01	.89	.065	.3228	.001
P-147	J-66o	J-66p	-.522	.00	.03	.065	.1724	.000
P-148	J-58t	J-66o	4.000	.01	.89	.065	.1492	.001
P-149	J-66p	J-61	3.478	.00	.19	.065	.2959	.000
P-150	J-66p	J-58x	-4.000	.01	.89	.065	.1233	.001
P-151	J-66u	J-66v	-7.478	.00	.42	.065	.1691	.001
P-152	J-66t	J-66u	4.000	.01	.89	.065	.1505	.001
P-153	J-66v	J-61	-3.478	.00	.19	.065	.3624	.000
P-154	J-66v	J-66r	-4.000	.01	.89	.065	.1376	.001
P-155	J-27	J-40	38.352	.05	2.09	.067	.2248	.004
P-156	J-66x	J-95	210.352	1.41	11.53	.067	.3088	.019
P-157	J-87	J-38	-284.756	.16	3.93	.066	.1105	.007
P-158	J-8	J-87	52.184	.09	2.88	.066	1.4796	.005
P-159	J-2	J-87	-980.000	1.24	13.57	.066	.1150	.023
P-160	J-66	J-59w	-88.000	.16	4.92	.065	.7611	.008
P-161	J-67	J-17	-4.000	.00	.39	.066	.0848	.001
P-162	J-68	J-20	-308.940	.12	4.26	.066	.3683	.007
P-163	J-69	J-39g	60.000	.07	3.31	.066	.1841	.006
P-164	J-88	J-80	470.748	.57	6.49	.066	.1209	.011
P-165	J-71	J-58z	-4.000	.01	.89	.065	.1425	.001
P-166	J-72	J-76	-8.000	.04	1.79	.065	.1141	.003
P-167	J-34	J-31	-185.648	1.41	10.14	.067	.2699	.017
P-168	J-54	J-53	-37.480	.06	2.18	.063	.1858	.004
P-169	J-55	J-57	-3.428	.00	.20	.063	.2668	.000
P-170	J-76	J-59c	-4.000	.01	.89	.065	.1358	.001
P-171	J-43c	J-55	4.000	.01	.93	.063	.4171	.002
P-172	J-51	J-51b	40.572	.07	2.36	.063	.6200	.004
P-173	J-77	J-42	-76.086	.25	4.43	.063	.8824	.007
P-174	J-82	J-46	.740	.00	.08	.063	4.9161	.000
P-175	J-82	J-45	1.313	.00	.08	.063	.2227	.000
P-176	J-83a	J-51f	24.572	.03	1.43	.063	1.0428	.002
P-177	J-83c	J-55	-7.428	.00	.43	.063	.4588	.001
P-178	J-77	J-51a	80.086	.28	4.67	.063	.2206	.008
P-179	J-80a	J-49	84.086	.31	4.91	.063	.4060	.008
P-180	J-80b	J-50	-90.052	.36	5.26	.063	.3301	.009
P-181	J-80d	J-54	-41.480	.08	2.42	.063	.6037	.004
P-182	J-75	J-57	4.000	.01	.93	.063	1.4339	.002
P-183	J-34	J-89	-56.000	.13	3.06	.067	1.0428	.005
P-184	J-90	J-28	-73.648	.22	4.01	.067	.2535	.007
P-185	J-90	J-91	-56.000	.13	3.05	.067	.3856	.005
P-186	J-92	J-70	150.352	.93	8.20	.067	.3670	.014
P-187	J-92	J-93	-56.000	.13	3.05	.067	.2886	.005
P-188	J-27	J-94	-56.000	.13	3.05	.067	.2781	.005
P-189	J-95	J-97	266.352	1.29	14.65	.066	.1799	.025
P-190	J-95	J-96	-56.000	.06	3.07	.067	.1033	.005
P-191	J-97	J-88	470.748	.05	6.48	.066	.1209	.011
P-192	J-97	J-110	-204.396	.01	2.82	.066	.0308	.005
P-193	J-98	J-39l	-20.396	.00	.28	.066	.0141	.000
P-194	J-98	J-99	-56.000	.01	3.08	.066	.0187	.005
P-195	J-100	J-98	-76.396	.00	1.05	.066	.0121	.002
P-196	J-100	J-32	-56.000	.01	3.08	.066	.0153	.005

P-197	J-102	J-100	-132.396	.00	1.82	.066	.0238	.003
P-198	J-102	J-103	-56.000	.01	3.08	.066	.0174	.005
P-199	J-105	J-102	-188.396	.01	2.59	.066	.0557	.004
P-200	J-105	J-104	-4.000	.00	.88	.066	.0128	.001
P-201	J-106	J-105	-192.396	.01	2.65	.066	.0477	.004
P-202	J-106	J-107	-4.000	.00	.88	.066	.0116	.001
P-203	J-108	J-106	-196.396	.01	2.70	.066	.0850	.005
P-204	J-108	J-109	-4.000	.00	.88	.066	.0145	.001
P-205	J-110	J-108	-200.396	.01	2.76	.066	.0650	.005
P-206	J-110	J-111	-4.000	.00	.88	.066	.0165	.001
R-1	R-1	R-1	-1168.000	.00	.00	.062********		.000

JUNCTION NAME	NODE TITLE	DEMAND (USFU)	PRESSURE (USPU)	PRESSURE (PSIA)	PRESSURE (PSIG)	DENSITY #/CF
J-1		-4.00	-26.89	13.73	-.97	.066
J-2		.00	-29.07	13.65	-1.05	.066
J-3		.00	-26.92	13.73	-.97	.066
J-4		.00	-26.93	13.72	-.97	.066
J-5		-4.00	-26.93	13.72	-.97	.066
J-6		.00	-26.94	13.72	-.97	.066
J-7		.00	-46.63	13.01	-1.68	.063
J-8		.00	-27.74	13.70	-1.00	.066
J-9		.00	-27.70	13.70	-1.00	.066
J-10		.00	-27.68	13.70	-1.00	.066
J-11		-4.00	-27.68	13.70	-1.00	.066
J-12		-4.00	-27.66	13.70	-1.00	.066
J-13		.00	-27.66	13.70	-1.00	.066
J-14		.00	-27.65	13.70	-1.00	.066
J-15		.00	-27.59	13.70	-.99	.066
J-16		.00	-26.90	13.73	-.97	.066
J-17		-4.00	-27.65	13.70	-1.00	.066
J-18		.00	-26.85	13.73	-.97	.066
J-19		-4.00	-26.85	13.73	-.97	.066
J-20		.00	-27.11	13.72	-.98	.066
J-21		.00	-26.84	13.73	-.97	.066
J-22		.00	-26.84	13.73	-.97	.066
J-23		.00	-26.91	13.73	-.97	.066
J-24		.00	-26.67	13.73	-.96	.066
J-25		.00	-27.47	13.71	-.99	.066
J-26		.00	-22.18	13.90	-.80	.067
J-27		.00	-22.18	13.90	-.80	.067
J-28		.00	-22.19	13.90	-.80	.067
J-29		-56.00	-22.19	13.90	-.80	.067
J-30		-56.00	-22.06	13.90	-.80	.067
J-31		.00	-22.62	13.88	-.82	.067
J-32		-56.00	-26.42	13.74	-.95	.066
J-33		.00	-26.71	13.73	-.96	.066
J-34		.00	-24.03	13.83	-.87	.067
J-35		-56.00	-26.34	13.75	-.95	.066
J-36		-56.00	-26.80	13.73	-.97	.066
J-37		.00	-27.31	13.71	-.98	.066
J-38		.00	-27.66	13.70	-1.00	.066

J-39	.00	-26.63	13.74	-.96	.066
J-40	.00	-22.23	13.89	-.80	.067
J-41	.00	-46.84	13.01	-1.69	.063
J-42	.00	-46.84	13.01	-1.69	.063
J-43	.00	-46.84	13.01	-1.69	.063
J-44	-4.00	-26.89	13.73	-.97	.066
J-45	.00	-46.84	13.01	-1.69	.063
J-46	-4.00	-46.84	13.01	-1.69	.063
J-47	.00	-46.85	13.01	-1.69	.063
J-48	.00	-46.87	13.00	-1.69	.063
J-49	.00	-47.92	12.97	-1.73	.063
J-50	.00	-47.83	12.97	-1.73	.063
J-51	-4.00	-47.03	13.00	-1.70	.063
J-52	-4.00	-46.85	13.01	-1.69	.063
J-53	-4.00	-46.91	13.00	-1.69	.063
J-54	-4.00	-46.97	13.00	-1.69	.063
J-55	.00	-46.84	13.01	-1.69	.063
J-56	-4.00	-46.84	13.01	-1.69	.063
J-57	.00	-46.84	13.01	-1.69	.063
J-58	.00	-31.43	13.56	-1.13	.065
J-59	.00	-31.43	13.56	-1.13	.065
J-60	.00	-31.44	13.56	-1.13	.065
J-61	.00	-31.43	13.56	-1.13	.065
J-62	.00	-31.44	13.56	-1.13	.065
J-63	.00	-31.45	13.56	-1.13	.065
J-64	.00	-31.55	13.56	-1.14	.065
J-65	.00	-31.60	13.56	-1.14	.065
J-66	.00	-31.88	13.55	-1.15	.065
J-67	-4.00	-27.65	13.70	-1.00	.066
J-68	.00	-27.23	13.71	-.98	.066
J-69	-4.00	-26.41	13.74	-.95	.066
J-70	.00	-23.26	13.86	-.84	.067
J-71	-4.00	-31.33	13.57	-1.13	.065
J-72	-4.00	-31.38	13.56	-1.13	.065
J-73	.00	-27.59	13.70	-.99	.066
J-74	-4.00	-47.83	12.97	-1.73	.063
J-75	-4.00	-46.83	13.01	-1.69	.063
J-76	-4.00	-31.33	13.57	-1.13	.065
J-77	.00	-47.09	13.00	-1.70	.063
J-78	.00	-27.61	13.70	-1.00	.066
J-79	-4.00	-26.94	13.72	-.97	.066
J-80	.00	-27.11	13.72	-.98	.066
J-81	-4.00	-26.92	13.73	-.97	.066
J-82	.00	-46.84	13.01	-1.69	.063
J-83	-56.00	-27.05	13.72	-.98	.066
J-84	-56.00	-23.22	13.86	-.84	.067
J-85	-4.00	-26.92	13.73	-.97	.066
J-86	.00	-27.61	13.70	-1.00	.066
J-87	.00	-27.82	13.69	-1.00	.066
J-88	.00	-26.54	13.74	-.96	.066
J-89	-56.00	-23.90	13.83	-.86	.067
J-90	.00	-22.41	13.89	-.81	.067
J-91	-56.00	-22.28	13.89	-.80	.067
J-92	.00	-22.33	13.89	-.81	.067
J-93	-56.00	-22.21	13.90	-.80	.067
J-94	-56.00	-22.05	13.90	-.80	.067

J-95	.00	-25.20	13.79	-.91	.067
J-96	-56.00	-25.14	13.79	-.91	.067
J-97	.00	-26.48	13.74	-.96	.066
J-98	.00	-26.43	13.74	-.95	.066
J-99	-56.00	-26.42	13.74	-.95	.066
J-100	.00	-26.43	13.74	-.95	.066
J-102	.00	-26.44	13.74	-.95	.066
J-103	-56.00	-26.43	13.74	-.95	.066
J-104	-4.00	-26.45	13.74	-.95	.066
J-105	.00	-26.45	13.74	-.95	.066
J-106	.00	-26.46	13.74	-.95	.066
J-107	-4.00	-26.45	13.74	-.95	.066
J-108	.00	-26.46	13.74	-.95	.066
J-109	-4.00	-26.46	13.74	-.95	.066
J-110	.00	-26.47	13.74	-.95	.066
J-111	-4.00	-26.47	13.74	-.95	.066
J-112	-56.00	-22.58	13.88	-.81	.067
J-24b	-4.00	-26.67	13.73	-.96	.066
J-25a	.00	-26.75	13.73	-.96	.066
J-38a	.00	-27.63	13.70	-1.00	.066
J-38b	.00	-27.59	13.70	-.99	.066
J-39a	.00	-26.88	13.73	-.97	.066
J-39b	.00	-27.03	13.72	-.97	.066
J-39d	.00	-27.35	13.71	-.99	.066
J-39g	-56.00	-26.48	13.74	-.96	.066
J-39k	.00	-26.19	13.75	-.94	.066
J-39l	.00	-26.43	13.74	-.95	.066
J-42c	-4.00	-47.33	12.99	-1.71	.063
J-42g	-4.00	-46.98	13.00	-1.70	.063
J-42i	-4.00	-46.95	13.00	-1.69	.063
J-42k	-4.00	-46.92	13.00	-1.69	.063
J-42m	-4.00	-46.87	13.00	-1.69	.063
J-42o	-4.00	-46.86	13.01	-1.69	.063
J-42q	-4.00	-46.84	13.01	-1.69	.063
J-42s	-4.00	-46.84	13.01	-1.69	.063
J-42u	-4.00	-46.84	13.01	-1.69	.063
J-43c	-4.00	-46.83	13.01	-1.69	.063
J-43e	-4.00	-46.83	13.01	-1.69	.063
J-43g	-4.00	-46.83	13.01	-1.69	.063
J-43m	-4.00	-46.84	13.01	-1.69	.063
J-43o	-4.00	-47.09	13.00	-1.70	.063
J-43q	-4.00	-47.37	12.99	-1.71	.063
J-43s	-4.00	-47.92	12.97	-1.73	.063
J-51a	.00	-47.37	12.99	-1.71	.063
J-51b	.00	-47.10	13.00	-1.70	.063
J-51c	.00	-47.33	12.99	-1.71	.063
J-51d	.00	-46.98	13.00	-1.70	.063
J-51e	.00	-46.95	13.00	-1.69	.063
J-51f	.00	-46.92	13.00	-1.69	.063
J-51g	.00	-46.86	13.01	-1.69	.063
J-51h	.00	-46.87	13.00	-1.69	.063
J-51i	.00	-46.85	13.01	-1.69	.063
J-51j	.00	-46.85	13.01	-1.69	.063
J-51k	.00	-46.84	13.01	-1.69	.063
J-51l	.00	-46.84	13.01	-1.69	.063
J-58h	-4.00	-46.85	13.01	-1.69	.063

J-58m	-4.00	-31.48	13.56	-1.14	.065
J-58n	-4.00	-31.42	13.56	-1.13	.065
J-58p	-4.00	-31.45	13.56	-1.13	.065
J-58r	-4.00	-31.42	13.56	-1.13	.065
J-58t	-4.00	-31.42	13.56	-1.13	.065
J-58x	-4.00	-31.42	13.56	-1.13	.065
J-58z	-4.00	-31.32	13.57	-1.13	.065
J-59c	-4.00	-31.32	13.57	-1.13	.065
J-59e	-4.00	-31.54	13.56	-1.14	.065
J-59g	-4.00	-31.59	13.56	-1.14	.065
J-59k	-4.00	-31.50	13.56	-1.14	.065
J-59m	-4.00	-31.47	13.56	-1.14	.065
J-59q	-4.00	-31.43	13.56	-1.13	.065
J-59u	.00	-31.66	13.55	-1.14	.065
J-59v	.00	-46.83	13.01	-1.69	.063
J-59w	.00	-31.72	13.55	-1.14	.065
J-59x	.00	-31.56	13.56	-1.14	.065
J-59y	.00	-31.56	13.56	-1.14	.065
J-59z	.00	-31.43	13.56	-1.13	.065
J-64a	.00	-31.48	13.56	-1.14	.065
J-64b	.00	-31.51	13.56	-1.14	.065
J-66a	-4.00	-31.65	13.55	-1.14	.065
J-66b	.00	-31.66	13.55	-1.14	.065
J-66c	-4.00	-31.60	13.56	-1.14	.065
J-66d	.00	-31.60	13.56	-1.14	.065
J-66e	.00	-31.48	13.56	-1.14	.065
J-66f	.00	-31.46	13.56	-1.13	.065
J-66h	-4.00	-31.36	13.56	-1.13	.065
J-66i	.00	-31.44	13.56	-1.13	.065
J-66k	-4.00	-31.51	13.56	-1.14	.065
J-66l	.00	-31.52	13.56	-1.14	.065
J-66n	.00	-31.43	13.56	-1.13	.065
J-66o	.00	-31.43	13.56	-1.13	.065
J-66p	.00	-31.43	13.56	-1.13	.065
J-66r	-4.00	-31.42	13.56	-1.13	.065
J-66t	-4.00	-31.42	13.56	-1.13	.065
J-66u	.00	-31.43	13.56	-1.13	.065
J-66v	.00	-31.43	13.56	-1.13	.065
J-66x	-4.00	-23.79	13.84	-.86	.067
J-80a	.00	-47.61	12.98	-1.72	.063
J-80b	.00	-48.19	12.96	-1.74	.062
J-80c	.00	-47.58	12.98	-1.72	.063
J-80d	.00	-47.04	13.00	-1.70	.063
J-83a	.00	-46.89	13.00	-1.69	.063
J-83c	.00	-46.85	13.01	-1.69	.063
J-9a	-12.00	-27.70	13.70	-1.00	.066
R-1	.00	-50.00	12.89	-1.80	.062

* This designates the use of default density in a low pressure region

THE NET SYSTEM DEMAND (USFU) = -1168.000

SUMMARY OF INFLOWS(+).AND.OUTFLOWS(-) :

NAME	FLOW (USFU)	FPN TITLE
R-1	-1168.0	R-1

MAXIMUM MACH NUMBER = .06 IN LINE NO. P-6

SUMMARY OF MINIMUM.AND.MAXIMUM VELOCITIES (FT/S)

MINIMUM		MAXIMUM	
R-1	.00	P-6	61.00
P-147	.03	P-189	14.65
P-95	.03	P-61	13.64
P-175	.08	P-159	13.57
P-174	.08	P-64	13.51

SUMMARY OF MINIMUM.AND.MAXIMUM LOSS/1000. (PSI)

MINIMUM		MAXIMUM	
P-147	.00	P-6	6.65
P-95	.00	P-156	.44
P-193	.00	P-189	.41
P-175	.00	P-58	.34
P-65	.00	P-57	.34

SUMMARY OF MINIMUM.AND.MAXIMUM PRESSURES (USPU)

MINIMUM		MAXIMUM	
R-1	-50.00	J-94	-22.05
J-80b	-48.19	J-30	-22.06
J-49	-47.92	J-27	-22.18
J-43s	-47.92	J-26	-22.18
J-50	-47.83	J-28	-22.19

********** END OF KYGAS SIMULATION **********

DATE FOR THIS COMPUTER RUN : 3-19-2012
START TIME FOR THIS COMPUTER RUN : 9: 1:42:15

THIS PAGE INTENTIONALLY LEFT BLANK

APPENDIX B

TECHNICAL SPECIFICATIONS

THIS PAGE INTENTIONALLY LEFT BLANK

WAYNE COUNTY MSW LANDFILL GCCS DESIGN PLAN

TECHNICAL SPECIFICATIONS

TABLE OF CONTENTS

Section No.	Specification
02614	HDPE Pipe
02640	Valves
11321	Condensate Pump Station and Controls
15880	Compressed Air System

THIS PAGE INTENTIONALLY LEFT BLANK

SECTION 02614

HIGH DENSITY POLYETHYLENE (HDPE) PIPE

High Density Polyethylene (HDPE) Pipe: HDPE Pipe is used in the landfill gas collection and control systems.

A. DESCRIPTION

1. General:

The Contractor shall furnish all labor, material, and equipment to complete installation of HDPE Pipe in accordance with the Contract Drawings and these Specifications. The Contractor shall also clean and test pipelines where required.

2. Related Work:

Related Contract Work is described in the following sections of the Specifications:

Work	Section
Condensate Pump Station and Controls	11321

3. Reference Standards:

The latest revision of the following standards of the American Society of Testing and Materials (ASTM) are hereby made a part of these specifications.

ASTM D 638	Standard Test Method for Tensile Properties of Plastics.
ASTM D 790	Standard Test Methods for Flexural Properties of Unreinforced and Reinforced Plastics and Electrical Insulating Materials.
ASTM D 1238	Standard Test Method for Flow Rates of Thermoplastics by Extrusion Plastometer.
ASTM D 1505	Standard Test Method for Density of Plastics by the Density-Gradient Technique.
ASTM D 1603	Standard Test Method for Carbon Black in Olefin Plastics.
ASTM D 2837	Standard Test Method for Obtaining Hydrostatic Design Basis for Thermoplastic Pipe Materials.

ASTM D 3035	Standard Specification for Polyethylene (PE) Plastic Pipe (DR-PR) Based on Controlled Outside Diameter.
ASTM D 3261	Standard Specification for Butt Heat Fusion Polyethylene (PE) Plastic Fittings for Polyethylene (PE) Plastic Pipe and Tubing.
ASTM D 3350	Standard Specification for Polyethylene Plastics Pipe and Fitting Materials.
ASTM F 412	Standard Terminology Relating to Plastic Piping Systems.
ASTM F 714	Standard Specification for Polyethylene (PE) Plastic Pipe (SDR-PR) Based on Outside Diameter.
ASTM F 1417	Standard Test Method for Installation Acceptance of Plastic Gravity Sewer Lines Using Low-Pressure Air.
ASTM F 1473	Standard Test Method for Notch Tensile Test to Measure the Resistance to Slow Crack Growth of Polyethylene Pipes and Resins.
ASTM F 2164	Standard Practice for Field Leak Testing of Polyethylene (PE) Pressure Piping Systems Using Hydrostatic Pressure.

4. Quality Control:

   The Contractor shall perform pressure testing of HDPE Pipe as described in this section.

5. Quality Assurance:

   Quality Assurance during placement of HDPE Pipe will be provided by the Owner.

B. MATERIALS

1. All HDPE Pipe shall be manufactured from new materials meeting the physical requirements shown in Table 1 of this section.

2. All HDPE Pipe shall have smooth interior walls and the DR (dimension ratio) and diameter of the pipe shall be as shown on the Contract Drawings.

3. All HDPE Pipe having an outside diameter 3.5 inches and larger shall meet the requirements of ASTM F 714. All HDPE Pipe having an outside diameter less than 3.5 inches shall meet the requirements of ASTM D 3035.

4. Visible defects, such as cracks, creases, crazing, non-uniformly pigmented areas, or undispersed raw materials shall not be acceptable and will result in rejection of the pipe by the CQA Engineer.

5. Pipe Perforations: The perforations of the perforated HDPE Pipe shall be as shown on the Contract Drawings.

6. All HDPE Pipe fittings shall be in accordance with ASTM D 3261 and shall be pressure rated to match the system piping. The fittings shall be manufactured from the same materials as the pipe itself. The butt fusion outlets of fittings shall be machined to the same DR as the system piping to which they are to be fused.

7. <u>Electronic Marker (Locator) Balls:</u>

   Electronic marker (locator) balls shall be provided and installed along all buried leachate gravity and force mains (including leak detection piping) installed under this section. Marker balls shall have a passive device capable of reflecting a specifically designated repulse frequency, unique to the utility being installed. Marker balls shall have a self-leveling capability and be 4 inch diameter green ScotchMark ball markers, as manufactured by 3M, or approved equal. Marker balls shall be installed approximately 6 inches over the point to be located and a minimum of 6 inches from any metal objects. Marker balls shall be installed while the pipe is being laid and shall be placed directly over the pipe. However, burial shall not be less than 18 inches or more than 3 feet. Marker balls shall be hand backfilled to 6 inches above the ball to prevent movement or damage. Marker balls shall be installed at the following locations:

   a. At a minimum of every 100 linear feet along each main line.
   b. At bends 22.5 degrees and larger.
   c. At capped or plugged ends.
   d. At tees along each main line.

8. Electrical Heat Tape and Insulation:

Electrical heat tape and insulation shall be installed where shown on the Contract Drawings. Heat tape shall be Easy Heat Freeze Free Self Regulating Pipe Heating System by Easy Heat of New Carlisle, Indiana, or approved equal. Heat tape shall be installed per the Manufacturer's guidelines based on the pipe diameter and a temperature of -20°F. Insulation shall consist of premolded fiberglass or of closed cell flexible elastomeric material. Insulation thickness shall be as recommended by the Manufacturer for a temperature of -20°F. Insulation of interior service shall be jacketed with suitable moisture resistant fabric type material. Insulation for exterior service shall have aluminum or plastic jacketing.

C. SUBMITTALS

The Contractor shall submit the following to the CQA Engineer:

1. Submit a certification and summary of all required test results, prior to installation, that all HDPE Pipe manufactured for the project has been produced in accordance with these Specifications.

2. Submit a copy of the HDPE Pipe Manufacturer's recommendations for shipping, handling, and storage of pipe.

3. Furnish copies of the delivery tickets or other approved receipts as evidence for materials received that will be incorporated into construction.

4. Survey Results:

After placement of HDPE Pipe, survey results shall be submitted for review prior to acceptance.

D. CONSTRUCTION

1. Shipping , Handling, and Storage:

All HDPE Pipe shall be shipped, handled, and stored in strict accordance with the Manufacturer's recommendations.

2. HDPE Pipe Installation:

a. The Contractor shall install HDPE Pipe to the lines and grades shown on the Contract Drawings. Line and grade of piping shall be maintained with laser or approved equivalent. The Contractor shall give the CQA Engineer sufficient notice so that the he may observe field location and installation activities.

b. Excavation for buried lines shall be backfilled as directed by the Engineer as shown on the Contract Drawings. Sand backfill or approved soil backfill compacted to at least 95 percent of the Standard Proctor dry density (ASTM D 698) shall be used.

Sharp stones or other potentially damaging material shall be removed from the base of the trench prior to placement of the piping. A leveling course, as required, shall consist of sand or other approved material.

c. Pipe Connections: Joining of HDPE Pipe shall be as follows:

(1) General pipe sections shall be butt-fusion welded according to the Manufacturer's recommendations and shall be performed by an appropriately trained fusion technician.

(2) Pipe ends to be butt-fusion welded shall be clean and dry at the time of welding. No welding shall occur during precipitation or excessive moisture.

(3) The Contractor shall grind burrs or other potentially damaging areas in the welds prior to placement of the pipe.

(4) Specified bolted pipe connections shall be made as specified on the Contract Drawings using stainless steel hardware and neoprene gaskets.

(5) Polyethylene stub ends and flanges must be at the ambient temperature of the surrounding soil at the time they are bolted tight to prevent relaxation of the flange bolts and loosening of the joint due to thermal contraction of the polyethylene.

(6) Properly executed electrofusion fittings may be used.

(7) Where piping is designed to be inspected and cleaned via cleanout ports, appropriate fittings shall be used to facilitate movement of inspection and cleaning tools along the length of the pipe.

d. Perforated HDPE Pipe shall be placed during construction as shown on the Contract Drawings.

3. <u>Cleaning:</u>

a. All HDPE Pipe shall be cleaned of any accumulation of silt, debris, or foreign matter of any kind and shall be kept clear of such accumulation until final acceptance of the work.

b. Final Flushing: The Contractor shall flush all leachate collection piping accessible by cleanout ports with potable water at or near the completion of the work. Any sediment remaining at collection points (sumps, manholes, etc.) shall be removed and disposed of as directed by the Engineer.

4. Pressure Testing:

a. All solid piping where factory or field joints have been performed require pressure testing prior to approval by the CQA Engineer, except as noted below:

(1) Any unjointed section of pipe showing visual signs of damage or that is of questionable quality may be required to be pressure tested as directed by the CQA Engineer.

(2) Cleanout risers within the containment areas do not require pressure testing.

b. Pressure testing shall be conducted by the Contractor in a manner approved by the Engineer. Such testing shall be observed by the CQA Engineer.

c. LFG Piping: Pressure testing of landfill gas piping shall be as follows:

(1) All gravity and vacuum piping shall be tested using low-pressure air in accordance with ASTM F 1417.

(2) All force main piping shall be tested using hydrostatic pressure in accordance with ASTM F 2164.

d. The pressures used in testing must not exceed the working pressure of the lowest rated component in the system (i.e. valves, meters, flanges, unions, etc.). The Manufacturer's recommendation for pressure testing may also be acceptable as an alternative if approved in advance by the Engineer.

e. Pressure testing of short sections of piping to be placed in confined or inaccessible areas may be pressure tested by the Contractor prior to installation when approved by the Engineer. Temporary fittings, etc. required to plug section ends shall be provided by the Contractor at no expense to the Owner.

f. Any piping that does not meet the pressure test criteria shall be repaired and retested at the Contractor's expense. No piping shall be approved until successful pressure testing is completed.

5. Surveying:

The Contractor shall survey all HDPE Pipe on 100 foot centers and at bends to ensure the proper location and grade of the piping.

7. All waste materials removed during installation of HDPE Pipe shall be disposed of on site in the active lined landfill as directed by the Owner and Engineer. The Contractor shall weigh waste materials at the facility scales prior to disposal. No tipping fee will be charged to the Contractor for disposal of these wastes.

TABLE 1: REQUIRED HDPE PIPE PROPERTIES

PROPERTY	TEST METHOD	UNITS	VALUE[1]
Material Designation	ASTM D 412	----------	PE 3408
Cell Classification	ASTM D 3350	----------	345464 C
Density	ASTM D 1505	g/cm^3	0.955
Melt Flow Index	ASTM D 1238	g/10 min	0.1
Flexural Modulus	ASTM D 790	psi	130,000
Tensile Strength @ Yield	ASTM D 638	psi	3,200
SCG (PENT)	ASTM F 1473	hrs.	> 100
Hydrostatic Design Basis at 73°F	ASTM D 2837	psi	1,600
UV Stabilizer	ASTM D 1603	% Carbon Black	2 - 3%

Notes:
1. Nominal Values.

END OF SECTION

THIS PAGE INTENTIONALLY LEFT BLANK

SECTION 02640

VALVES

Valves: Gate, butterfly, swing check, air and vacuum release, ball, pressure relief, and diaphragm valves are to be installed in the leachate and gas management systems of the landfill.

A. DESCRIPTION

1. General:

The Contractor shall furnish all labor, material, and equipment to complete installation of all valves including all fittings, appurtenances, and transition pieces required for a complete and operable installation in accordance with the Contract Drawings and these Specifications.

2. Related Work:

Related Contract Work is described in the following sections of the Specifications:

Work	Section
HDPE Pipe	02614

3. Reference Standards:

The latest revision of the following standards of the American National Standard Institute (ANSI) are hereby made a part of these specifications.

ANSI B 16.1 Pipe Flanges and Flanged Fittings.

4. Quality Assurance:

Quality Assurance during installation of Valves will be provided by the Owner as described in the accompanying Project CQA Manual.

B. MATERIALS

1. Valve Materials and Construction:

a. All valves shall be constructed of new, first quality materials which have strength, wearing, and corrosion resistance characteristics entirely suitable for the types of service for which the individual valves are designated.

b. All valve body castings shall be clean, sound, and without defects of any kind. No plugging, welding, or repairing of defects will be allowed.

c. Valves shall have flanged ends for exposed service and mechanical joint ends for buried service, unless otherwise shown on the Contract Drawings or specified herein. Flanged ends shall be flat-faced, 125 lb. American Standard unless otherwise shown or specified in accordance with ANSI B16.1. All bolt heads and nuts shall be hexagonal of American Standard size. The Contractor shall be responsible for coordinating connecting piping.

2. Gate Valves:

Gate valves shall be rated to 150 psi at 70°F. Body shall be PVC. The valve shaft shall be stainless steel and be of blow out proof design. The elastomeric plug shall be polypropylene or CPVC. Seals shall be EPDM or Teflon. Gate valves shall have flanged (ANSI) ends. Gate valves shall be as manufactured by Asahi/America, Inc., or equal.

3. Butterfly Valves:

Butterfly valves shall be a wafer type single piece body design rated to 150 psi at 70° F. Body shall be molded of glass fiber reinforced PVC. The valve disc shall be Type 1, Grade 1 PVC or glass reinforced polypropylene. The valve shaft shall be stainless steel and be of blow out proof design. The elastomeric liner shall have an integrally molded flange face seal. Liner and seals shall be EPDM or Teflon. Valves shall be furnished with a manual gear box operator that direct mounts to the valve. The operator shall have a torque output of 3500 inch pounds. The operator case shall be of die cast aluminum and epoxy coated. Butterfly valves shall be as manufactured by Hayward Industrial Products, or equal.

4. Swing Check Valves:

Swing Check Valves shall be constructed of solid Class 12454-B PVC or Class 23447-B CPVC with EPDM or Teflon seats and seals. Valves intended for chemical service shall be constructed of materials suitable for the intended service. Valves shall have an external lever and weight. Check valves shall have flanged (ANSI) ends. Valves shall be capable of top entry to facilitate cleaning and repair without removal from the line. Valves shall incorporate a single disc design. Check valves shall be as manufactured by Asahi/America, Inc., or equal.

5. Air and Vacuum Release Valves:

Air and vacuum release valves shall operate by sealing a BUNA-N rubber outlet seat with a peripheral float as the liquid enters the valve chamber to raise the float. The valve shall satisfactorily withstand hydrostatic pressures of 300 psi. The valve shall be constructed of cast iron body and top flange with stainless steel or bronze and brass trim. The peripheral guided float shall be stainless steel. Air and vacuum release valves shall be as manufactured by Crispin, or equal.

6. Ball Valves:

Ball valves shall be constructed of PVC. Ball valves shall have two-way blocking capability and shall have flanged (ANSI) ends. Ball valves shall have Teflon seats with Viton backing cushions and Viton o-ring seals, and shall be designed for a maximum water working pressure of 150 psi at 120°F. Ball valves shall be furnished with ABS lever operating handles. Ball valves shall be as manufactured by Asahi/America, Inc., or equal.

7. 3-Way Ball Valves:

All 3-way ball valves shall be constructed of PVC. All 3-way ball valves shall have a type NT ball for blocking capability and shall have flanged (ANSI) ends. All 3-way ball valves shall have Teflon seats with Viton backing cushions and Viton o-ring seals, and shall be designed for a maximum water working pressure of 150 psi at 120°F. Unless noted as otherwise on the Contract Drawings, 3-way ball valves shall be designed for lateral installation, and shall be capable of diverting flow to the directions indicated on the Contract Drawings. Ball valves shall be furnished with ABS lever operating handles. Ball valves shall be as be as manufactured by Hayward Flow Control Systems, or equal.

8. Pressure Relief Valves:

Pressure relief valves shall be rated to 150 psi at 70°F. Pressure relief valves shall be constructed of PVC with stainless steel float and u-cup seals. Pressure relief valves shall have flanged (ANSI) ends. Pressure relief valves shall be as manufactured by Asahi/America, Inc., or equal.

9. Diaphragm Valves:

Diaphragm valves shall be constructed of PVC. Diaphragm valves shall have flanged (ANSI) ends. Diaphragm shall be manufactured of hypalon and shall provide a bubble tight closure for a maximum water working pressure of 150 psi at 100°F. Valve bonnet shall be metal reinforced and bolted such that the diaphragm may be replaced without removing the valve body from the pipeline. Diaphragm valves shall be furnished with a handwheel operator and a position

indicator with an adjustable travel stop to prevent overtightening. Diaphragm valves shall be as manufactured by Asahi/America, Inc., or equal.

10. Valve Operators:

The valve operator shall be designed to unseat, open or close, and seat the valve under the most adverse operating condition to which the valve will be subjected. All gearing shall be totally enclosed, sealed, and permanently lubricated.

C. SUBMITTALS

The Contractor shall submit the following to the CQA Engineer:

1. Submit a certification and summary of all required test results, prior to installation, that all valves manufactured for the project have been produced in accordance with these Specifications.

2. Submit Shop Drawings for all valves and accessories prior to installation. Submittals shall include all layout dimensions, size and materials of construction for all components, information on support and anchoring where necessary, pneumatic and hydraulic characteristics, and complete descriptive information to demonstrate full compliance with the Contract Documents.

3. Furnish copies of the delivery tickets or other approved receipts as evidence for materials received that will be incorporated into construction.

4. Operation and maintenance manuals and installation instructions shall be submitted for all valves and accessories. The Manufacturer(s) shall delete all information which does not apply to the equipment being furnished.

D. CONSTRUCTION

1. Before installation, all valves shall be lubricated, manually opened and closed to check their operation, and the interior of the valves shall be thoroughly cleaned.

2. Install all valves where shown on the Contract Drawings in accordance with the Manufacturer's instructions.

3. Install all valves so that operating handwheels or wrenches may be conveniently turned but without interfering with access, and as approved by the Engineer.

4. Unless otherwise approved, install all valves plumb and level. Valves shall be installed free from distortion and strain caused by misaligned piping, equipment, or other causes. Concrete valve footings shall be provided for each unsupported valve where recommended by the Manufacturer or as directed by the Engineer.

5. Valve boxes shall be set plumb, and centered with the bodies directly over the valves so that traffic loads are not transmitted to the valve. Earth fill shall be carefully tamped around each valve box to a distance of 4 feet on all sides of the box, or to the undisturbed trench face, if less than 4 feet.

END OF SECTION

THIS PAGE INTENTIONALLY LEFT BLANK

SECTION 11321

CONDENSATE PUMP STATION AND CONTROLS

Condensate Pump Station and Controls: Condensate Pump Stations and Controls are used to collect & pump condensate from the landfill gas collection and control system (GCCS).

A. DESCRIPTION

1. General:

The Contractor shall furnish all labor, material, and equipment to complete installation of a Condensate Pump Station and Controls, including all necessary and incidental items, in accordance with the Contract Drawings and these Specifications.

2. Related Work

Related Contract Work is described in the following sections of the Specifications:

Work	Section
HDPE Pipe	02614
Valves	02640

3. Manufacturer Qualifications:

The Manufacturer shall be a UL listed shop for industrial control systems and shall provide evidence of such on request from the Engineer or Owner.

4. Warranty:

All equipment shall be warranted by the Manufacturer against defects in material, installation, and workmanship for a period of one (1) year. Warranties shall become effective (initiate) upon field service/start-up by the Manufacturer's representative as required in this section.

B. MATERIALS

1. General:

The materials supplied under these Specifications shall consist of new, first-quality products designed and manufactured specifically for the purpose of this

work, which shall have been satisfactorily demonstrated, by prior use, to be suitable and durable for such purposes.

2. Wet Well:

The wet well shall be constructed of single walled HDPE assembly. The wet well shall be liquid and gas tight and shall be designed to withstand vacuum of 100 in. w.c. and a pressure of 5 PSIG. The wet well shall be designed to have a 3-inch deep solids settling area as to not effect the pump or control system operation.

The wet well shall be fabricated to the dimensions shown on the Contract Drawings.

3. Pumps:

The pump shall include one (1) air-operated, Viridian or Blackhawk, positive displacement, self priming, lube free pump (or approved equal) capable of the pumping conditions listed in **Table 1** of this section. The pump should be air operated, and have variable capacity and discharge pressures. The pump should have solids capacity up to 3/32 inch in diameter and a bottom inlet.

The pump housing shall consist of polyethylene, fiberglass, or stainless steel material. All exposed bolts and nuts shall be stainless steel. Pump seals, diaphragms and internal parts which contact liquid, shall be Viton, Acetal, or stainless steel.

a. General:

The pumps shall be capable of the pumping conditions listed in **Table 1** of this section. The pumps shall be suitable for vertical or horizontal installations as shown on the Contract Drawings.

b. Design:

Each pump shall be capable of pumping leachate and condensate. The fluid inlet shall be located at the bottom of the pump intake cylinder and be capable of removing water or product to zero submergence depth. The pump system shall be powered by compressed air in accordance with Section 15880, Compressed Air System, of these Specifications.

c. Materials:

Major components shall be made of 300 series stainless steel, seal rings shall be made of Teflon or Viton and bearings are to be Teflon, Viton or stainless steel. In addition, all fasteners shall be 300 series stainless steel.

d. Foot Valve:

The Foot Valve and sucker-rod piston valve shall be a free floating, self cleaning, ball check valve.

4. Access

All access to the pumps and wet well shall be from the surface such that operator is not required to enter a confined space.

Equipment shall be arranged to be easily accessible for operation and maintenance. Service connections including the liquid discharge, pressure balance line, and high pressure inlet shall be mounted through a common flanged cap.

5. Controls:

a. General:

The control system shall be designed to operate the required pump specified on the Contract Drawings.

The control function shall provide for the operation of the pump under normal conditions. As the flow decreases, the pumps shall cut off at the elevations as shown on the Contract Drawings.

The control system shall function as described below. The equipment listed below is a guide and does not relieve the supplier from supplying a system that will function as required.

b. Control System Operation:

The control system shall provide for the automatic and manual control of the pump to maintain a pumped down condition of the wet well. Levels shall be sensed by an internal float adjusted to the levels depicted on the Contract Drawings. The system shall sense the ■On• and ■Off• levels. As the level in the wet well rises, the pump shall start and pump the station to the ■Off• position.

6. Gauges:

Gauges shall be furnished and installed under this section. All gauges shall be the Bourdon tube type with a black phenolic case conforming to NEMA 4 requirements and a 1**.** inch diameter dial face. Gauge windows shall be constructed of a shatterproof glass. The gauge dial shall have black scale

markings on a white background evenly spaced over a 270 degree arc. Gauges shall be provided on the discharge of the pump in a location as directed by the Engineer.

Each gauge installation shall include a diaphragm seal with flushing connection and a . inch 300 series stainless steel shutoff cock. The diaphragm seal shall be designed for continuous duty and the diaphragm shall be constructed of 300 series stainless steel with a silicone fill liquid. The diaphragm seal body shall be constructed of carbon steel with a . inch, minimum, threaded connection on the process side and a ⬆ inch, minimum, threaded connection on the gauge side.

Discharge gauges shall be graduated in psi from zero to a minimum of twenty-five (25) psi above the respective pump shutoff head. Graduations shall be in psi.

Gauges shall be as manufactured by Ashcroft Gauge, Division of Dresser Industries, U.S. Gauge Division of Ametek, or equal.

7. Flexible Hose:

   a. External connections shall be PVC reinforced flexible PVC hose or PE pipe. Hose shall be rated for at least 10 inches mercury vacuum at the appropriate buried depth.

   b. Internal connections shall be constructed of PVC reinforced PVC hose. The hose shall be rated for a pressure of 100 PSIG at 72 deg F. with a minimum safety factor of 3.

   c. The pump suction line shall be connected using a hose capable of sustaining 100 in. w.c., constructed of non-corrosive materials.

8. Piping:

   a. Internal piping and fittings shall be Schedule 80 PVC for condensate liquids.

   b. Compressed air lines in the equipment enclosure shall be 1/2 inch pipe, neoprene reinforced synthetic rubber hose with a maximum working pressure of 250 PSIG and a safety factor of 2.

9. Filter & Regulator:

The air supply entering the pneumatic pump shall be dry and filtered. A 5-micron filter shall be used for removing particulate, oil and water. The filter/regulator shall have a zinc housing, a nylon bowl, and a plastic bowl guard or of equivalent materials.

The filter/regulator shall be rated for a maximum inlet pressure of 150 PSIG. The regulator diaphragm shall have an internal pressure relief port.

10. Lubricator:

An airline lubricator shall be installed to lubricate the liquid pump if recommended by the Manufacturer. The lubricator shall be capable of automatically proportioning oil flow relative to airflow. The lubricator shall be fabricated using a zinc housing and a nylon bowl with a plastic bowl guard. The lubricator shall fill from the top. The lubricator shall be rated for a maximum inlet pressure of 150 PSIG.

11. Isolation Valve:

An inlet air isolation valve shall be installed to isolate the air components from the air supply. The valve shall have a bleed port to bleed downstream pressure in the off position. The block valve shall be a ⅜ inch NPT brass body ball valve with a brass ball and Buna-N seats.

12. Relief Valve:

An ASME rated pressure relief valve shall be installed to protect the air components. The relief valve shall be constructed with a brass body and a resilient silicone seat. The valve setpoint shall be 125 PSIG.

13. Compressed Air System:

The compressed air system shall conform to the requirements of Section 15880, Compressed Air System, of these Specifications.

14. Flow Counter:

A magnetic piston/spring flow counter shall be installed to count all pump cycles. The counter shall be rated for a maximum of 200 PSI and shall be non-resettable.

C. SUBMITTALS

The Contractor shall submit the following to the Engineer:

1. The Contractor shall submit shop drawings for the Condensate Pump Station and Controls for approval at least fifteen (15) days prior to construction.

2. Operation and maintenance manuals shall be provided for all the equipment specified in this section.

3. Manufacturer’s Warranty.

D. CONSTRUCTION

1. Installation:

The Condensate Pump Station and Controls shall be constructed as shown on the Contract Drawings and with the Manufacturer’s standard dimensions and tolerances for the pump specified.

The Condensate Pump Station and Controls shall be installed level and plumb and concentrically located within the excavation. The surrounding area shall be compacted and graded that accumulation or ponding of water does not occur around the completed structure.

All hoses, lines, and piping shall be constructed that all liquids are free draining to either the landfill gas pipe or to the sump and shall be free of any obstructions to liquid or airflow. Prior to connection, lines shall be purged of debris and thoroughly cleaned.

2. Field Tests:

The Contractor shall provide the services of the pump and control system Manufacturer's representatives to check the installation, make adjustments, and place the equipment in operation. Provide a minimum of one eight hour day on-site for start-up and checks of the system.

All condensate liquid storage sections and piping shall be air tested to verify the unit and connections are liquid and air tight consistent with related sections of these Specifications.

3. Equipment Identification:

The pumps shall be provided with a substantial stainless steel nameplate, securely fastened in a conspicuous place and clearly inscribed with the Manufacturer's name, year of manufacture, serial number, and principal rating data. Nameplate data shall include the rating in gallons per minute, rated head, and efficiency.

TABLE 1: PUMP REQUIREMENTS

PROPERTY	PUMP
Model	Viridian Model VP-4BL, or approved equal
Capacity (gpm)	9
Total Head (feet)	180
Maximum Air Consumption (SCFM)	7
Shutoff Head (feet)	426
Regulated Air Supply (psi)	100
Maximum Particle Size (microns)	5

END OF SECTION

THIS PAGE INTENTIONALLY LEFT BLANK

SECTION 15880

COMPRESSED AIR SYSTEM

Compressed Air System: includes installation and testing of a Compressed Air System for the landfill gas collection system

A. DESCRIPTION

1. General:

The Contractor shall furnish all labor, material, and equipment to complete installation of the Compressed Air System, including all necessary and incidental items, in accordance with the Contract Drawings and these Specifications.

2. Related Work:

Related Contract Work is described in the following sections of the Specifications:

Work	Section
HDPE Pipe	02614
Valves	02640

3. Manufacturer Qualifications:

The Contractor shall provide the services of a Compressed Air System Manufacturer who shall meet the qualifications specified in this Section. The Contractor shall, however, accept and retain full responsibility for all materials and installation and shall be held responsible for any defects in the completed Compressed Air System.

The Manufacturer shall be responsible for the production and delivery of the Compressed Air System and shall be a well-established firm with more than two (2) years experience in the manufacture of compressed air systems.

4. Warranty:

The Contractor shall furnish the Owner with one-year written warranties obtained from the Manufacturer against defects in materials and workmanship. Warranty conditions proposed by the Manufacturer concerning limits of liability will be evaluated and must be acceptable to the Owner. Warranty shall begin upon acceptance by the Engineer and Owner.

5. Storage and Protection

Handling, storage, and care of the Compressed Air System prior to and following installation at the site is the responsibility of the Contractor. During storage, the compressed air system shall be protected from excessive heat or cold, puncture, cutting, or other damaging or deleterious conditions. The Compressed Air System shall be stored in accordance with additional requirements of the Manufacturer. The Contractor shall be liable for all damages to the materials incurred prior to final acceptance of the work by the Owner.

B. MATERIALS

1. General:

The materials supplied under these Specifications shall consist of new, first-quality products designed and manufactured specifically for the purpose of this work, which shall have been satisfactorily demonstrated, by prior use, to be suitable and durable for such purposes.

2. Air Compressor:

The air compressor shall be of reciprocating piston or rotary screw type compressors with design life of not less than 20,000 hours elapsed running time before major overhaul is required. The air compressor shall be capable of operation under conditions shown in **Table 1** of this section.

3. Membrane Compressed Air Dryer:

The Compressed Air System shall be furnished with a Membrane Compressed Air Dryer on the leaving side of the compressor. The Membrane Compressed Air Dryer is to be completed as a single element consisting of bundled hollow fiber permeable membranes in a corrosion resistant pressure rated shell.

Inlet and outlet fittings shall be located axially (in-line) and integrated into the end caps of the dryer. Sweep air shall result from permeation and shall not be fed back from the outlet flow, purge rate regulation shall not be required as operating pressure changes. Sweep vent ports (two) are to include threaded, removable vent screen fittings to allow removal of vent line attachment.

Tags are to indicate maximum operating pressure, maximum operating temperature and model numbers.

Normal pressure drop through the dryer shall be less than 3 psi but can be as high as 5 psi if maximum recommended flow ratings are used. The dryer shall not contain moving parts, wearing parts, refrigerants, or dessicants.

The Membrane Compressed Air Dryer shall be capable of conditioning incoming air to a dewpoint of 0° F or less at the outlet at the operating conditions of the Air Compressor. The Air Dryer shall be as Manufactured by Hankison or approved equal.

4. Filter:

The Compressed Air System shall also include a package pre-filter as recommended by manufacturer to filter solid particles prior to 1 micron.

5. Base:

The compressor and its motor shall be provided with a cast iron or steel base which shall be mounted on air tank or on separate concrete foundation with vibration isolation padding. Tank shall be ASME approved. Size for no more than 12 compressor starts per hour, 33% run time.

6. Receiver Tank:

The receiver tank shall be horizontal mounted with a capacity of 80 gallons constructed steel of welded construction. The tank shall be ASME coded suitable in this application with protective exterior coatings as recommended by manufacturer. The storage tank shall also include automatic electrical drain valve for low maintenance and trouble free operation.

7. Motor and Controls:

The compressor shall be driven by a high efficiency electric motor wound for the current available. Each motor shall be controlled by pressure operated, enclosed pilot switch connected to motor starter. Pressure switches for start/stop control shall be set to operate between 100 and 125 psi. This system shall be equipped with electrical simplex controller, starters, and disconnect switches; thus permitting automatic operation of system.

8. Valves and Gauges:

The compressor shall include intake air cleaner, discharge stop valve, and pressure relief valve and pressure gauges. The relief valve shall be placed between the compressor and the discharge stop valve and shall be set for pressure of 10 psi above control switch cutout pressure. Intake air cleaners shall be of cleanable impingement type.

C. SUBMITTALS

The Contractor shall submit the following to the Engineer:

1. The Contractor shall submit shop drawings for the Compressed Air System for approval at least fifteen (15) days prior to construction.

2. Operation and maintenance manuals shall be provided for all the equipment specified in this section.

3. Manufacturer's Warranty.

D. CONSTRUCTION

1. Installation:

Work shall be performed in accordance with the Manufacturer•s written instructions and installation detail drawings.

a. The Compressed Air System shall be lifted and handled according to written instructions supplied by the Manufacturer.

b. The Compressed Air System shall not be used for any other supplemental application without prior approval of the Engineer.

3. Field Tests:

The Contractor shall provide the services of the Compressed Air System Manufacturer•s representative to check the installation, make adjustments, and place the equipment in operation. Provide a minimum of one eight hour day on-site for start-up and checks of the system. At the time of system start-up, the Contractor shall demonstrate to the satisfaction of the Engineer that the Compressed Air System is fully operational.

4. Equipment Identification:

The Compressed Air System shall be provided with a substantial stainless steel nameplate, securely fastened in a conspicuous place and clearly inscribed with the Manufacturer•s name, year of manufacture, serial number, and principal rating data. Nameplate data shall include the rating in gallons per minute, rated capacity, and efficiency.

TABLE 1: AIR COMPRESSOR REQUIREMENTS

PROPERTY	VALUE
Number of Compressors	3
Model	Ingersoll Rand UP-7.5TAS-125, or approved equal.
Capacity (scfm)	24
Pressure (psig)	175
Maximum Pressure (psig)	210
Maximum Sound (dBA)	85 (at 3 feet)
Tank (gallons)	80
Horsepower	7.5
Voltage	280 V/3 Phase/60 Hz

END OF SECTION

THIS PAGE INTENTIONALLY LEFT BLANK

APPENDIX C

LANDFILL GAS COLLECTION & CONTROL SYSTEM DRAWINGS

THIS PAGE INTENTIONALLY LEFT BLANK

WAYNE COUNTY LANDFILL FACILITY
WAYNE COUNTY, NORTH CAROLINA

LANDFILL GAS COLLECTION AND CONTROL SYSTEM EXPANSION

JUNE 2012

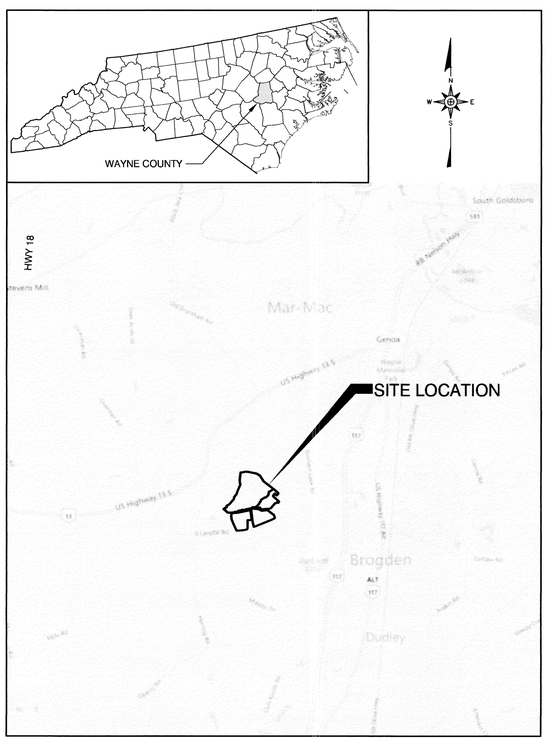

SITE LOCATION MAP
NOT TO SCALE

IN ASSOCIATION WITH:

1511 NINETY SIX HIGHWAY
NINETY SIX, SOUTH CAROLINA
29666

SHEET NO.	DRAWING NO.	DRAWING TITLE
1		TITLE – COVER SHEET
2	S1	EXISTING CONDITIONS
3	S2	SITE DEVELOPMENT PLAN
4	S3	UNIT 1 PROPOSED SYSTEM EXPANSION
5	S4	UNIT 2 PROPOSED SYSTEM EXPANSION
6	S5	UNIT 3 PROPOSED SYSTEM EXPANSION
7	S6	FLARE AND GENERATOR AREA
8	D1	LANDFILL GCCS DETAILS (SHEET 1 OF 4)
9	D2	LANDFILL GCCS DETAILS (SHEET 2 OF 4)
10	D3	LANDFILL GCCS DETAILS (SHEET 3 OF 4)
11	D4	LANDFILL GCCS DETAILS (SHEET 4 OF 4)

NORTH CAROLINA PROFESSIONAL SEAL 023002 ENGINEER STACEY A. SMITH

RICHARDSON SMITH GARDNER & ASSOCIATES
14 N. Boylan Ave.
Raleigh, N.C. 27603
NC LIC. NO. C-0828 (Engineering)
www.rsgengineers.com
ph: 919-828-0577
fax: 919-828-3899

STANDARD SECTION LOCATION CALLOUT (SHEET AND DETAIL)

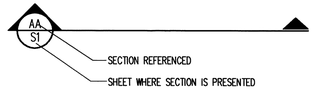

STANDARD DETAIL CALLOUT

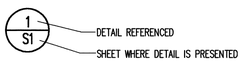

STANDARD DETAIL LABEL AND CALLOUT

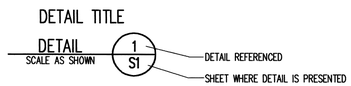

STANDARD REVISION CALLOUT (SHEET AND DETAIL)

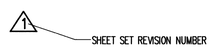

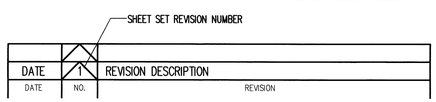

PERMIT ISSUE
NOT FOR CONSTRUCTION

FILE NAME
WAYNE-D0009

G:\CAD\Wayne County\MPW 10-2/3b Expansion\sheets\WAYNE-D0009.dwg - 6/22/2012 2:03 PM

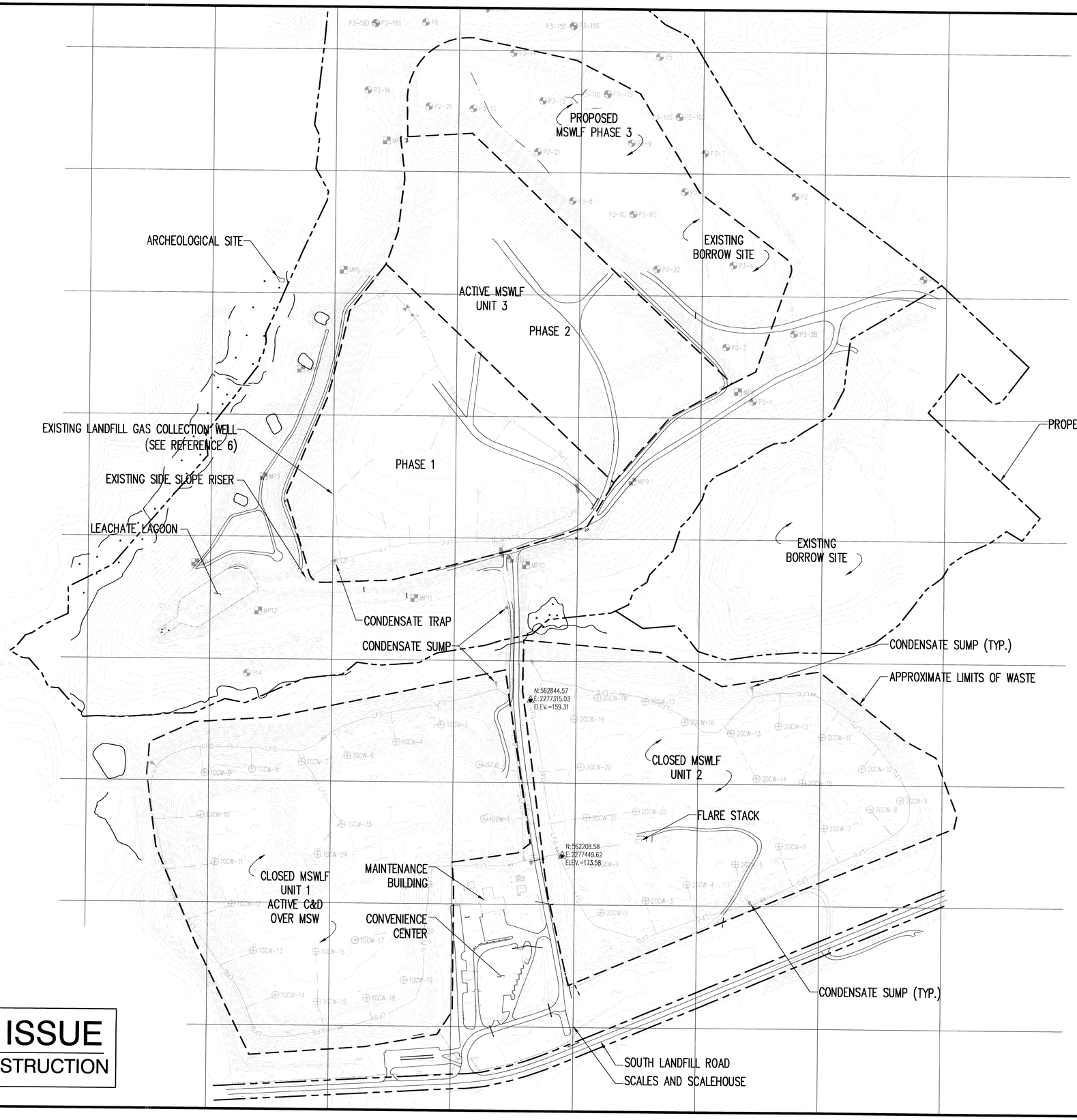

PERMIT ISSUE
NOT FOR CONSTRUCTION

LEGEND

- EXISTING 10' CONTOUR (SEE REFERENCE 1)
- EXISTING 2' CONTOUR
- APPROXIMATE PROPERTY LINE (SEE REFERENCE 2)
- APPROXIMATE LIMITS OF WASTE/ANCHOR TRENCH (SEE REFERENCE 2)
- LFG — EXISTING LANDFILL GAS HEADER
- EXISTING LANDFILL GAS LATERAL
- C — EXISTING CONDENSATE FORCEMAIN
- A — EXISTING COMPRESSED AIR PIPE
- 2GCW-7 — EXISTING LFG EXTRACTION WELL (SEE REFERENCE 1)
- P3-3 — EXISTING PIEZOMETER (SEE REFERENCE 4)
- MP8 — EXISTING METHANE MONITORING PROBE (SEE REFERENCE 4)
- N:562208.58 E:2277449.62 ELEV.=173.58 — SITE BENCHMARK (SEE REFERENCE 4)

REFERENCES

1. LANDFILL GAS COLLECTION AND CONTROL SYSTEM AS-BUILT SURVEY PERFORMED BY SURVEYING SOLUTIONS, OCTOBER 31, 2002.
2. SITE TOPOGRAPHY AND EXISTING CONDITIONS FROM DRAWING "FACILITY PLAN EXISTING CONDITIONS" DATED JANUARY 6, 2010 BY MUNICIPAL ENGINEERING SERVICES, AND FIELD SURVEY CONDUCTED BY SURVEYING SOLUTIONS, PC, DATED MAY 11, 2010.
3. LOCATION OF 16"ø BURIED LANDFILL GAS LINE AND GENERATOR AREA FROM FIELD SURVEY PERFORMED BY SURVEYING SOLUTIONS, NOVEMBER 3, 2010.
4. EXISTING METHANE MONITORING PROBES AND PIEZOMETERS FROM DRAWING "EXISTING CONDITIONS WITH PHASE 1 AND 2 ANCHOR TRENCH AND LEACHATE FORCEMAINS" DATED DECEMBER 2, 2010 BY MUNICIPAL ENGINEERING SERVICES.
5. ORIGINAL CCCS PLAN FOR UNITS 1 AND 2 WAS PREPARED BY MUNICIPAL ENGINEERING SERVICES, SEPTEMBER 2001.
6. EXISTING LFG PIPING AND WELL LOCATIONS IN PHASE 1 (UNIT 3) FROM DRAWING "LFG COLLECTION SYSTEM SITE PLAN" AUGUST 27, 2010, PREPARED BY CARLSON ENVIRONMENTAL CONSULTANTS, PC.

0 200' 400' 600'

NO.	DATE	REVISION

RICHARDSON SMITH GARDNER & ASSOCIATES
NC LIC. NO. C-0538 (Engineering)
14 N. Boylan Ave.
Raleigh, N.C. 27603
ph: 919-828-0577
fax: 919-828-3899
www.rsgengineers.com

SEAL: NORTH CAROLINA PROFESSIONAL SEAL 023002 ENGINEER STACEY A. SMITH

PROJECT TITLE: WAYNE COUNTY LANDFILL FACILITY WAYNE COUNTY, NORTH CAROLINA GAS SYSTEM EXPANSION

DRAWING TITLE: EXISTING CONDITIONS

DESIGNED BY: L.A.P.	DRAWN BY: J.A.L.
CHECKED BY: SAS	PROJECT NO.: MPW 10-2
SCALE: AS SHOWN	DATE: JUNE 2012
FILE NAME: WAYNE-D0010	
SHEET NO. 2	DRAWING NO. S1

G:\CAD\Wayne County\MPW 10-2\fig Expansion\sheets\WAYNE-D0010.dwg - 6/22/2012 1:45 PM

PERMIT ISSUE
NOT FOR CONSTRUCTION

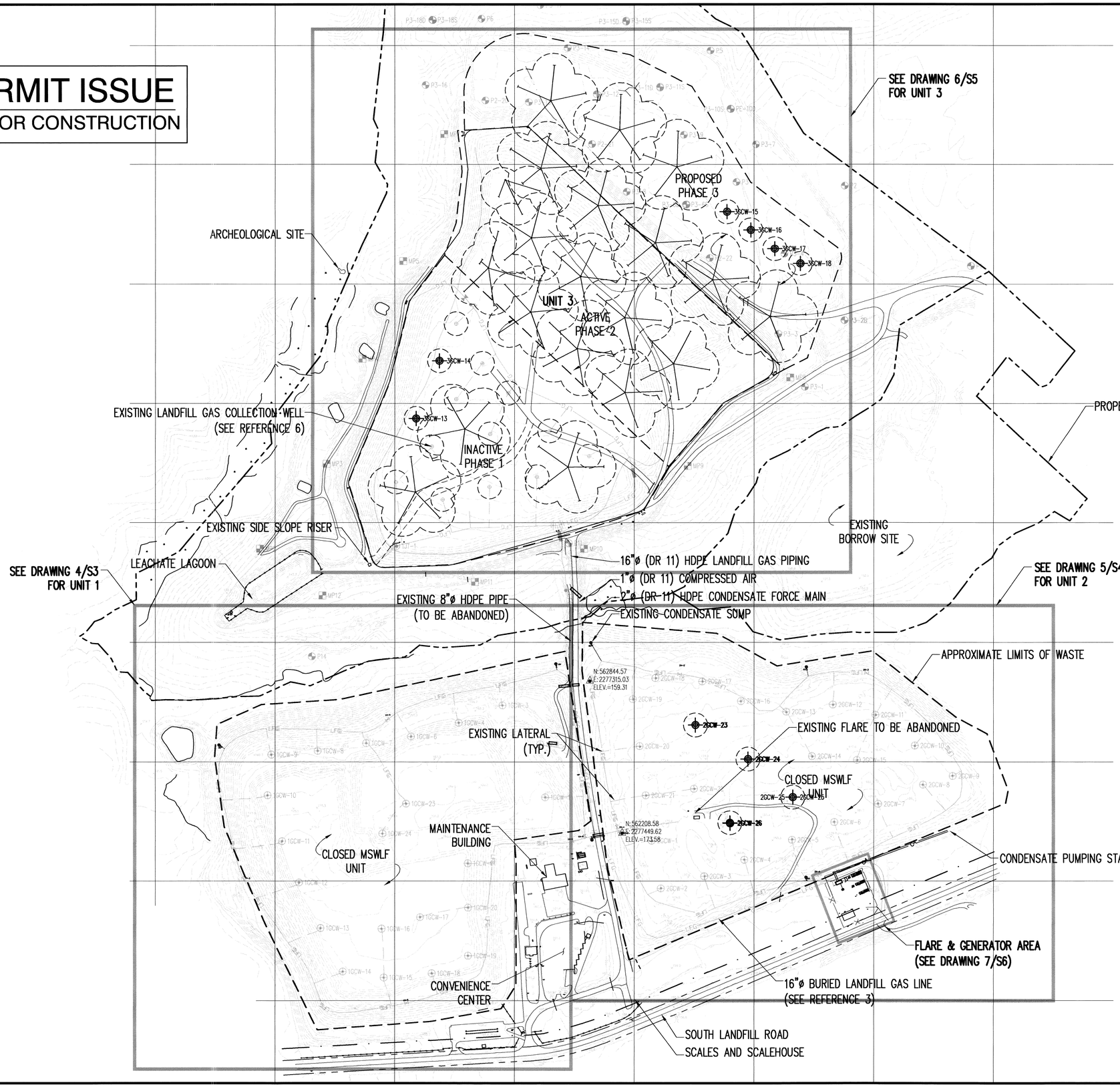

LEGEND

	EXISTING 10' CONTOUR (SEE REFERENCE 1)
	EXISTING 2' CONTOUR
	PROPOSED 10' CONTOUR
	PROPOSED 2' CONTOUR
	APPROXIMATE PROPERTY LINE (SEE REFERENCE 2)
	APPROXIMATE LIMITS OF WASTE/ANCHOR TRENCH (SEE REFERENCES 2 AND 4)
	EXISTING LANDFILL GAS HEADER
	EXISTING LANDFILL GAS LATERAL
	EXISTING CONDENSATE FORCEMAIN
	EXISTING COMPRESSED AIR PIPE
2GCW-7	EXISTING LFG EXTRACTION WELL (SEE REFERENCES 1 AND 2)
P3-3	EXISTING PIEZOMETER (SEE REFERENCE 4)
MP8	EXISTING METHANE MONITORING PROBE (SEE REFERENCE 4)
N:562208.58 E:2277449.62 ELEV.=173.58	SITE BENCHMARK (SEE REFERENCE 4)
EW-67	LANDFILL GAS EXTRACTION WELL AND WELLHEAD
CPS-1	CONDENSATE PUMP STATION
CT-1	CONDENSATE TRAP
	LANDFILL GAS HEADER/LATERAL ISOLATION VALVE

REFERENCES

1. TOPOGRAPHIC CONTOURS FOR THIS DRAWING WERE PROVIDED BY MUNICIPAL ENGINEERING SERVICES CO, PA FROM VARIOUS DATES.
2. EXISTING LFG COLLECTION SYSTEM INFORMATION WAS OBTAINED FROM A CONSTRUCTION PLAN DRAWING FOR UNIT 1 AND UNIT 2 PREPARED BY MUNICIPAL ENGINEERING SERVICES CO, PA AND CONSTRUCTION PLANS FOR UNIT 3 BY CARLSON ENVIRONMENTAL CONSULTANTS, PC DATED FEBRUARY 2006. EXISTING LFG COLLECTION SYSTEM LOCATIONS SHOULD BE CONSIDERED APPROXIMATE.
3. LOCATION OF 16"ø BURIED LANDFILL GAS LINE AND GENERATOR AREA FROM FIELD SURVEY PERFORMED BY SURVEYING SOLUTIONS, NOVEMBER 3, 2010.
4. EXISTING METHANE MONITORING PROBES AND GAS COLLECTION WELLS FROM DRAWING "EXISTING CONDITIONS WITH PHASE 1 AND 2 ANCHOR TRENCH AND LEACHATE FORCEMAINS" DATED DECEMBER 2, 2010 BY MUNICIPAL ENGINEERING SERVICES.
5. ORIGINAL GCCS PLAN FOR UNITS 1 AND 2, WAS PREPARED BY MUNICIPAL ENGINEERING SERVICES, SEPTEMBER 2001.
6. EXISTING LFG PIPING AND WELL LOCATIONS IN PHASE 1 (UNIT 3) FROM DRAWING "LFG COLLECTION SYSTEM SITE PLAN" AUGUST 27, 2010, PREPARED BY CARLSON ENVIRONMENTAL CONSULTANTS, PC.
7. PROPOSED DESIGN GRADES IN UNIT 3 FROM DRAWING "FACILITY PLAN PHASE 4 FILL PLAN" BY MUNICIPAL ENGINEERING SERVICES DATED DECEMBER 16, 2008 AND SEALED APRIL 23, 2010.

NO.	DATE	REVISION

RICHARDSON SMITH GARDNER & ASSOCIATES
14 N. Boylan Ave. Raleigh, N.C. 27603
ph: 919-828-0577 fax: 919-828-3899
www.rsgengineers.com

SEAL: NORTH CAROLINA PROFESSIONAL ENGINEER SEAL 023002 STACEY L. SMITH

PROJECT TITLE: WAYNE COUNTY LANDFILL FACILITY
WAYNE COUNTY, NORTH CAROLINA
GAS SYSTEM EXPANSION

DRAWING TITLE: SITE DEVELOPMENT PLAN

DESIGNED BY: L.K.P.	DRAWN BY: J.A.L.
CHECKED BY: LKP	PROJECT NO.: MPW 10-2
SCALE: AS SHOWN	DATE: JUNE 2012
FILE NAME: WAYNE-D0011	
SHEET NO. 3	DRAWING NO. S2

G:\CAD\Wayne County\MPW 10-2\fig Expansion\sheets\WAYNE-D0011.dwg - 6/26/2012 3:30 PM

EXISTING CONDENSATE SUMP (TO BE ABANDONED)

4/D1 EXISTING CONDENSATE SUMP

APPROXIMATE LIMITS OF WASTE

EXISTING CONDENSATE SUMP (TO BE ABANDONED)

SEDIMENT BASIN

N:562844.57
E:2277315.03
ELEV.=159.31

ROAD CROSSING 2/D3

UNIT 2 (SEE DRAWING S4)

16" LFG HEADER

ACTIVE C&D VERTICAL EXPANSION

ROAD CROSSING 2/D3

HDPE LFG HEADER PIPE 3/D2

UNIT 1

EXISTING 10" N:562208.58 E:2277449.62 ELEV.=173.58

4/D1 CONDENSATE SUMP

MAINTENANCE BUILDING

OFFICE/ADMINISTRATION/SCALES

CONVENIENCE CENTER

2/D2 RE-CONNECT TO EXISTING VERTICAL WELLHEAD

HDPE CONDENSATE FORCEMAIN 2/D1

1/D1 HDPE COMPRESSED AIR PIPE

CONDENSATE PUMPING STATION 5/D1

SOUTH LANDFILL ROAD

SCALES AND SCALEHOUSE

CONVENIENCE CENTER

SITE ENTRANCE

N W E S

LEGEND

	EXISTING 10' CONTOUR (SEE REFERENCE 1)
	EXISTING 2' CONTOUR
	APPROXIMATE PROPERTY LINE (SEE REFERENCE 2)
	APPROXIMATE LIMITS OF WASTE/ANCHOR TRENCH (SEE REFERENCES 2 AND 4)
LFG	EXISTING LANDFILL GAS HEADER
	EXISTING LANDFILL GAS LATERAL
C	EXISTING CONDENSATE FORCEMAIN
A	EXISTING COMPRESSED AIR PIPE
LFG	PROPOSED LFG HEADER
A	PROPOSED COMPRESSED AIR PIPE
FM	PROPOSED CONDENSATE FORCEMAIN
20CW-24	EXISTING LFG EXTRACTION WELL (SEE REFERENCES 1 AND 2)
P3-3	EXISTING PIEZOMETER (SEE REFERENCE 4)
MPB	EXISTING METHANE MONITORING PROBE (SEE REFERENCE 4)
N:562208.58 E:2277449.62 ELEV.=173.58	SITE BENCHMARK (SEE REFERENCE 4)
CPS-1	PROPOSED CONDENSATE PUMP STATION
CT-1	PROPOSED CONDENSATE TRAP
	PROPOSED LANDFILL GAS HEADER/LATERAL ISOLATION VALVE

REFERENCES

1. TOPOGRAPHIC CONTOURS FOR THIS DRAWING WERE PROVIDED BY MUNICIPAL ENGINEERING SERVICES CO, PA FROM VARIOUS DATES.
2. EXISTING LFG COLLECTION SYSTEM INFORMATION WAS OBTAINED FROM A CONSTRUCTION PLAN DRAWING FOR UNIT 1 AND UNIT 2 PREPARED BY MUNICIPAL ENGINEERING SERVICES CO, PA AND CONSTRUCTION PLANS FOR UNIT 3 BY CARLSON ENVIRONMENTAL CONSULTANTS, PC DATED FEBRUARY 2006. EXISTING LFG COLLECTION SYSTEM LOCATIONS SHOULD BE CONSIDERED APPROXIMATE.
3. LOCATION OF 16"ø BURIED LANDFILL GAS LINE AND GENERATOR AREA FROM FIELD SURVEY PERFORMED BY SURVEYING SOLUTIONS, NOVEMBER 3, 2010.
4. EXISTING METHANE MONITORING PROBES AND PIEZOMETERS FROM DRAWING "EXISTING CONDITIONS WITH PHASE 1 AND 2 ANCHOR TRENCH AND LEACHATE FORCEMAINS" DATED DECEMBER 2, 2010 BY MUNICIPAL ENGINEERING SERVICES.
5. ORIGINAL GCCS PLAN FOR UNITS 1 AND 2, WAS PREPARED BY MUNICIPAL ENGINEERING SERVICES, SEPTEMBER 2001.

0 100' 200' 300'

PERMIT ISSUE
NOT FOR CONSTRUCTION

G:\CAD\Wayne County\MPW 10-2\fig Expansion\sheets\WAYNE-D0012.dwg - 6/22/2012 2:52 PM

RICHARDSON SMITH GARDNER & ASSOCIATES
NC LIC. NO. C-0828 (Engineering)
14 N. Boylan Ave.
Raleigh, N.C. 27603
ph: 919-828-0577
fax: 919-828-3899
www.rsgengineers.com

NO.	DATE	REVISION

SEAL

NORTH CAROLINA PROFESSIONAL SEAL 023002 ENGINEER STACEY A. SMITH

PROJECT TITLE:
WAYNE COUNTY LANDFILL FACILITY
WAYNE COUNTY, NORTH CAROLINA
GAS SYSTEM EXPANSION

DRAWING TITLE:
UNIT 1
PROPOSED SYSTEM EXPANSION

DESIGNED BY: S.A.S.	DRAWN BY: J.A.L.
CHECKED BY: AP	PROJECT NO.: MPW 10-2
SCALE: AS SHOWN	DATE: JUNE 2012
FILE NAME: WAYNE-D0012	
SHEET NO. 4	DRAWING NO. S3

1"ø (DR 11) COMPRESSED AIR

2"ø (DR 11) HDPE CONDENSATE FORCE MAIN

16"ø (DR 11) HDPE LANDFILL GAS PIPING

CONDENSATE PUMPING STATION

EXISTING 8"ø HDPE PIPE (TO BE ABANDONED)

4 D1 EXISTING CONDENSATE SUMP

EXISTING CONDENSATE SUMP (TO BE ABANDONED)

5 D1 CONDENSATE PUMPING STATION (TYP.)

EXISTING CONDENSATE SUMP

APPROXIMATE LIMITS OF WASTE

EXISTING LFG EXTRACTION WELLS (TYP.) (SEE NOTE 1)

APPROX. 50' ZONE OF INFLUENCE (TYP.)

1 D2 EXTRACTION WELL

N:562844.57
E:2277315.03
ELEV.=159.31

ABANDON AND PLUG EXISTING LATERAL (TYP.)

ACTIVE C&D VERTICAL EXPANSION

EXISTING FLARE STATION (TO BE ABANDONED)

EXISTING CONDENSATE SUMP

EXISTING 10"
N:562208.58
E:2277449.62
ELEV.=173.58

STUB OUT ON 10" GAS LINE TO FLARE STACK

MAINTENANCE BUILDING

5 D1 CONDENSATE PUMPING STATION (TYP.)

CONVENIENCE CENTER

FLARE AND GENERATOR AREA SEE DRAWING

TIE-IN WITH VALVE AT ROAD CROSSING

16"ø HDPE LANDFILL GAS HEADER (SEE REFERENCE 3)

SOUTH LANDFILL ROAD

SCALES AND SCALEHOUSE

2GCW-23 2GCW-24 2GCW-25 2GCW-26

LEGEND

	EXISTING 10' CONTOUR (SEE REFERENCE 1)
	EXISTING 2' CONTOUR
	APPROXIMATE PROPERTY LINE (SEE REFERENCE 2)
	APPROXIMATE LIMITS OF WASTE/ANCHOR TRENCH (SEE REFERENCES 2 AND 4)
	EXISTING LANDFILL GAS HEADER
	EXISTING LANDFILL GAS LATERAL
	EXISTING CONDENSATE FORCEMAIN
	EXISTING COMPRESSED AIR PIPE
LFG	PROPOSED LFG HEADER
A	PROPOSED COMPRESSED AIR PIPE
FM	PROPOSED CONDENSATE FORCEMAIN
2GCW-24	EXISTING LFG EXTRACTION WELL (SEE REFERENCES 1 AND 2)
P3-3	EXISTING PIEZOMETER (SEE REFERENCE 4)
MP8	EXISTING METHANE MONITORING PROBE (SEE REFERENCE 4)
N:562208.58 E:2277449.62 ELEV.=173.58	SITE BENCHMARK (SEE REFERENCE 4)
2GCW-26	PROPOSED LANDFILL GAS EXTRACTION WELL AND WELLHEAD (SEE NOTE 1)
CPS-1	PROPOSED CONDENSATE PUMP STATION
CT-1	PROPOSED CONDENSATE TRAP
	PROPOSED LANDFILL GAS HEADER/LATERAL ISOLATION VALVE

NOTES

1. CONNECT ALL WELLHEADS TO NEW LATERAL AND REPAIR ALL EXISTING 8"x8" WELL BORE SEALS.

REFERENCES

1. TOPOGRAPHIC CONTOURS FOR THIS DRAWING WERE PROVIDED BY MUNICIPAL ENGINEERING SERVICES CO, PA FROM VARIOUS DATES.
2. EXISTING LFG COLLECTION SYSTEM INFORMATION WAS OBTAINED FROM A CONSTRUCTION PLAN DRAWING FOR UNIT 1 AND UNIT 2 PREPARED BY MUNICIPAL ENGINEERING SERVICES CO, PA AND CONSTRUCTION PLANS FOR UNIT 3 BY CARLSON ENVIRONMENTAL CONSULTANTS, PC DATED FEBRUARY 2006. EXISTING LFG COLLECTION SYSTEM LOCATIONS SHOULD BE CONSIDERED APPROXIMATE.
3. LOCATION OF 16"ø BURIED LANDFILL GAS LINE AND GENERATOR AREA FROM FIELD SURVEY PERFORMED BY SURVEYING SOLUTIONS, NOVEMBER 3, 2010.
4. EXISTING METHANE MONITORING PROBES AND PIEZOMETERS FROM DRAWING "EXISTING CONDITIONS WITH PHASE 1 AND 2 ANCHOR TRENCH AND LEACHATE FORCEMAINS" DATED DECEMBER 2, 2010 BY MUNICIPAL ENGINEERING SERVICES.
5. ORIGINAL GCCS PLAN FOR UNITS 1 AND 2, WAS PREPARED BY MUNICIPAL ENGINEERING SERVICES, SEPTEMBER 2001.

0 100' 200' 300'

PERMIT ISSUE
NOT FOR CONSTRUCTION

G:\CAD\Wayne County\MPW 10-2\fig Expansion\sheets\WAYNE-D0007.dwg - 7/3/2012 9:00 AM

NO.	DATE	REVISION

RICHARDSON SMITH GARDNER & ASSOCIATES
PLANNERS AND ENGINEERS
14 N. Boylan Ave. Raleigh, N.C. 27603
www.rsgengineers.com
ph: 919-828-0577
fax: 919-828-3899

SEAL: NORTH CAROLINA PROFESSIONAL SEAL 020021 ENGINEER STACEY A. SMITH

PROJECT TITLE: WAYNE COUNTY LANDFILL FACILITY
WAYNE COUNTY, NORTH CAROLINA
GAS SYSTEM EXPANSION

DRAWING TITLE: UNIT 2
PROPOSED SYSTEM EXPANSION

DESIGNED BY: S.A.S.	DRAWN BY: J.A.L.
CHECKED BY:	PROJECT NO.: MPW 10-2
SCALE: AS SHOWN	DATE: JUNE 2012
FILE NAME: WAYNE-D0007	
SHEET NO. 5	DRAWING NO. S4

PERMIT ISSUE
NOT FOR CONSTRUCTION

EXISTING SIDE SLOPE RISER

3/D1 CONDENSATE TRAP (TYP.)

ANTICIPATED ZONE OF INFLUENCE (TYP.)

APPROXIMATE WASTE LIMITS/ANCHOR TRENCH (SEE REFERENCES 2 AND 4)

APPROX. 50' ZONE OF INFLUENCE (TYP.)

PROPOSED PHASE 3

ACTIVE PHASE 2

UNIT 3

INACTIVE PHASE 1

EXISTING SIDE SLOPE RISER

LANDFILL GAS PRODUCTION WELL (TYP.) 1/D2

EXISTING LANDFILL GAS PRODUCTION WELL (TYP.) (SEE REFERENCE 5)

1/D4 RADIAL COLLECTOR (TYP.)

EXISTING SIDE SLOPE RISER

2/D3 ROAD CROSSING

CONTRACTOR SHALL COORDINATE CROSSING WITH COUNTY

EXISTING SIDE SLOPE RISER

DISCHARGE INTO LEACHATE STORAGE POND

RELOCATE EXISTING VALVE AND RE-ADJUST SLOPE TO NEW TIE-IN

2/D3 ROAD CROSSING

SPIDER 1, SPIDER 2, SPIDER 3, SPIDER 4, SPIDER 5, SPIDER 6, SPIDER 7, SPIDER 8, SPIDER 9, SPIDER 10, SPIDER 11, SPIDER 12, SPIDER 13, SPIDER 14, SPIDER 15, SPIDER 16, SPIDER 17, SPIDER 18, SPIDER 19

3GCW-13, 3GCW-14, 3GCW-15, 3GCW-16, 3GCW-17, 3GCW-18

LEGEND

150	EXISTING 10' CONTOUR (SEE REFERENCE 1)
151	EXISTING 2' CONTOUR
	APPROXIMATE PROPERTY LINE (SEE REFERENCE 2)
	APPROXIMATE LIMITS OF WASTE/ANCHOR TRENCH (SEE REFERENCE 4)
	EXISTING LANDFILL GAS HEADER
	EXISTING LANDFILL GAS LATERAL
	EXISTING CONDENSATE FORCEMAIN
	EXISTING COMPRESSED AIR PIPE
LFG	PROPOSED LFG HEADER
A	PROPOSED COMPRESSED AIR PIPE
	PROPOSED CONDENSATE FORCEMAIN
	PROPOSED CONDENSATE GRAVITY
2GCW-24	EXISTING LFG EXTRACTION WELL (SEE REFERENCES 1 AND 2)
P3-3	EXISTING PIEZOMETER (SEE REFERENCE 4)
MP8	EXISTING METHANE MONITORING PROBE (SEE REFERENCE 4)
N:562208.58 E:2277449.62 ELEV.=173.58	SITE BENCHMARK (SEE REFERENCE 4)
3GCW-26	LANDFILL GAS EXTRACTION WELL AND WELLHEAD
CPS-1	CONDENSATE PUMP STATION
CT-1	CONDENSATE TRAP
	LANDFILL GAS HEADER/LATERAL ISOLATION VALVE

NOTES
1. PROPOSED GRADES ARE ONLY SHOWN UP TO ELEVATION 190 FOR CLARITY OF SPIDERS, SEE REFERENCE 6.

REFERENCES
1. TOPOGRAPHIC CONTOURS FOR THIS DRAWING WERE PROVIDED BY MUNICIPAL ENGINEERING SERVICES CO, PA FROM VARIOUS DATES.
2. EXISTING LFG COLLECTION SYSTEM INFORMATION WAS OBTAINED FROM A CONSTRUCTION PLAN DRAWING FOR UNIT 1 AND UNIT 2 PREPARED BY MUNICIPAL ENGINEERING SERVICES CO, PA AND CONSTRUCTION PLANS FOR UNIT 3 BY CARLSON ENVIRONMENTAL CONSULTANTS, PC DATED FEBRUARY 2006. EXISTING LFG COLLECTION SYSTEM LOCATIONS SHOULD BE CONSIDERED APPROXIMATE.
3. LOCATION OF 16"ø BURIED LANDFILL GAS LINE AND GENERATOR AREA FROM FIELD SURVEY PERFORMED BY SURVEYING SOLUTIONS, NOVEMBER 3, 2010.
4. EXISTING METHANE MONITORING PROBES, PIEZOMETERS AND APPROXIMATE WASTE LIMITS/ANCHOR TRENCH FROM DRAWING "EXISTING CONDITIONS WITH PHASE 1 AND 2 ANCHOR TRENCH AND LEACHATE FORCEMAINS" DATED DECEMBER 2, 2010 BY MUNICIPAL ENGINEERING SERVICES.
5. EXISTING LFG PIPING AND WELL LOCATIONS IN PHASES 1 AND 2 (UNIT 3) FROM DRAWING "LFG COLLECTION SYSTEM SITE PLAN" AUGUST 27, 2010, PREPARED BY CARLSON ENVIRONMENTAL CONSULTANTS, PC.
6. PROPOSED DESIGN GRADES IN UNIT 3 FROM DRAWING "FACILITY PLAN PHASE 4 FILL PLAN" BY MUNICIPAL ENGINEERING SERVICES DATED DECEMBER 16, 2008 AND SEALED APRIL 23, 2010.

0 100' 200' 300'

NO.	DATE	REVISION

RICHARDSON SMITH GARDNER & ASSOCIATES
ENGINEERS & CONSULTANTS
14 N. Boylan Ave. Raleigh, N.C. 27603
ph: 919-828-0577 fax: 919-828-3899
www.rsgengineers.com

SEAL: NORTH CAROLINA PROFESSIONAL ENGINEER SEAL 025002 STACEY A. SMITH

PROJECT TITLE: WAYNE COUNTY LANDFILL FACILITY WAYNE COUNTY, NORTH CAROLINA GAS SYSTEM EXPANSION

DRAWING TITLE: UNIT 3 PROPOSED SYSTEM EXPANSION

DESIGNED BY: S.A.S.	DRAWN BY: J.A.L.
CHECKED BY: SAS	PROJECT NO.: MPW 10-2
SCALE: AS SHOWN	DATE: JUNE 2012
FILE NAME: WAYNE-D0013	
SHEET NO. 6	DRAWING NO. S5

G:\CAD\Wayne County\MPW 10-2\fig Expansion\sheets\WAYNE-D0013.dwg - 7/2/2012 5:41 PM

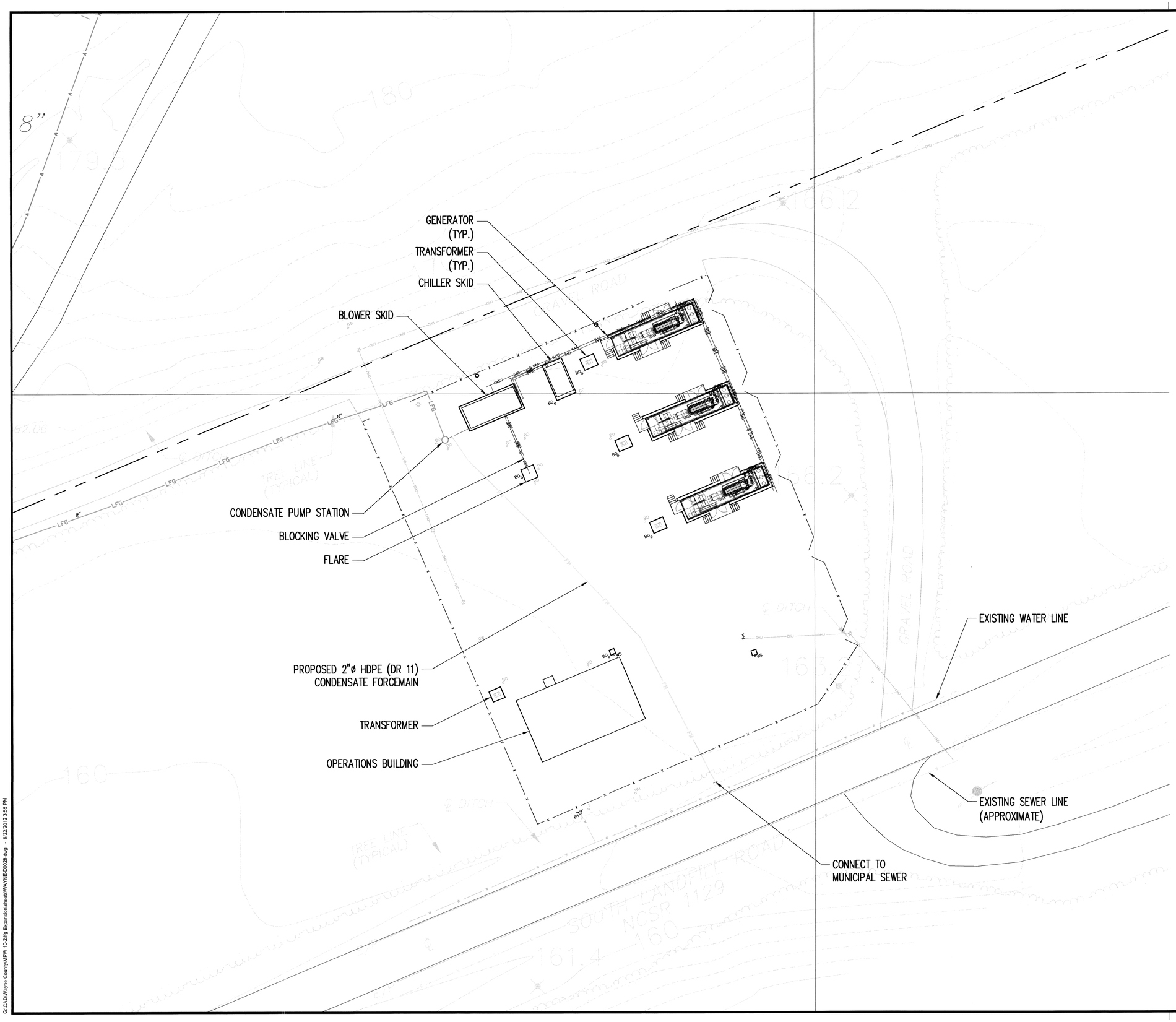

LEGEND

165	EXISTING 10' CONTOUR (SEE REFERENCE 1)
162	EXISTING 2' CONTOUR
	APPROXIMATE PROPERTY LINE (SEE REFERENCE 2)
	APPROXIMATE LIMITS OF WASTE/ANCHOR TRENCH (SEE REFERENCES 2 AND 4)
GAS	EXISTING LANDFILL GAS HEADER
GAS	EXISTING LANDFILL GAS LATERAL
F	EXISTING CONDENSATE FORCEMAIN
A	EXISTING COMPRESSED AIR PIPE
LFG	PROPOSED LFG HEADER
A	PROPOSED COMPRESSED AIR PIPE
FM	PROPOSED CONDENSATE FORCEMAIN
20CW-24	EXISTING LFG EXTRACTION WELL (SEE REFERENCES 1 AND 2)
P3-3	EXISTING PIEZOMETER (SEE REFERENCE 4)
MP8	EXISTING METHANE MONITORING PROBE (SEE REFERENCE 4)
N:562208.58 E:2277449.62 ELEV.=173.58	SITE BENCHMARK (SEE REFERENCE 4)
2GCW-26	PROPOSED LANDFILL GAS EXTRACTION WELL AND WELLHEAD (SEE NOTE 1)
CPS-1	PROPOSED CONDENSATE PUMP STATION
CT-1	PROPOSED CONDENSATE TRAP
	PROPOSED LANDFILL GAS HEADER/LATERAL ISOLATION VALVE

NOTES

1. CONNECT ALL WELLHEADS TO NEW LATERAL AND REPAIR ALL EXISTING 8"x8" WELL BORE SEALS.

REFERENCES

1. TOPOGRAPHIC CONTOURS FOR THIS DRAWING WERE PROVIDED BY MUNICIPAL ENGINEERING SERVICES CO, PA FROM VARIOUS DATES.
2. EXISTING LFG COLLECTION SYSTEM INFORMATION WAS OBTAINED FROM A CONSTRUCTION PLAN DRAWING FOR UNIT 1 AND UNIT 2 PREPARED BY MUNICIPAL ENGINEERING SERVICES CO, PA AND CONSTRUCTION PLANS FOR UNIT 3 BY CARLSON ENVIRONMENTAL CONSULTANTS, PC DATED FEBRUARY 2006. EXISTING LFG COLLECTION SYSTEM LOCATIONS SHOULD BE CONSIDERED APPROXIMATE.
3. LOCATION OF 16"ø BURIED LANDFILL GAS LINE AND GENERATOR AREA FROM FIELD SURVEY PERFORMED BY SURVEYING SOLUTIONS, NOVEMBER 3, 2010.
4. EXISTING METHANE MONITORING PROBES AND PIEZOMETERS FROM DRAWING "EXISTING CONDITIONS WITH PHASE 1 AND 2 ANCHOR TRENCH AND LEACHATE FORCEMAINS" DATED DECEMBER 2, 2010 BY MUNICIPAL ENGINEERING SERVICES.

0 20' 40' 60'

PERMIT ISSUE
NOT FOR CONSTRUCTION

NO.	DATE	REVISION

RICHARDSON SMITH GARDNER & ASSOCIATES
ENGINEERS AND CONSULTANTS
14 N. Boylan Ave. Raleigh, N.C. 27603
ph: 919-828-0577 fax: 919-828-3899
www.rsgengineers.com

SEAL

NORTH CAROLINA PROFESSIONAL SEAL 025002 7-2-12 ENGINEER STACEY A. GUNTHER

PROJECT TITLE: WAYNE COUNTY LANDFILL FACILITY WAYNE COUNTY, NORTH CAROLINA GAS SYSTEM EXPANSION

DRAWING TITLE: FLARE AND GENERATOR AREA

DESIGNED BY: SAG	DRAWN BY: JAL
CHECKED BY: CP	PROJECT NO.: MPW 10-2
SCALE: AS SHOWN	DATE: JUNE 2012
FILE NAME: WAYNE-D0028	
SHEET NO. 7	DRAWING NO. S6

G:\CAD\Wayne County\MPW 10-2\fig Expansion\sheets\WAYNE-D0028.dwg - 6/22/2012 3:55 PM

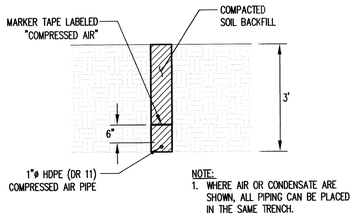

COMPRESSED AIR PIPE TRENCH

DETAIL 1/D1 NOT TO SCALE

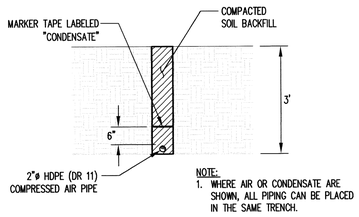

CONDENSATE PIPE TRENCH

DETAIL 2/D1 NOT TO SCALE

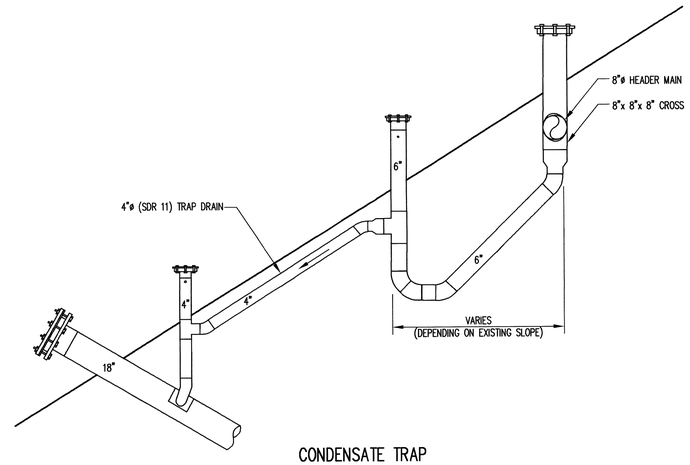

CONDENSATE TRAP

DETAIL 3/D1 NOT TO SCALE

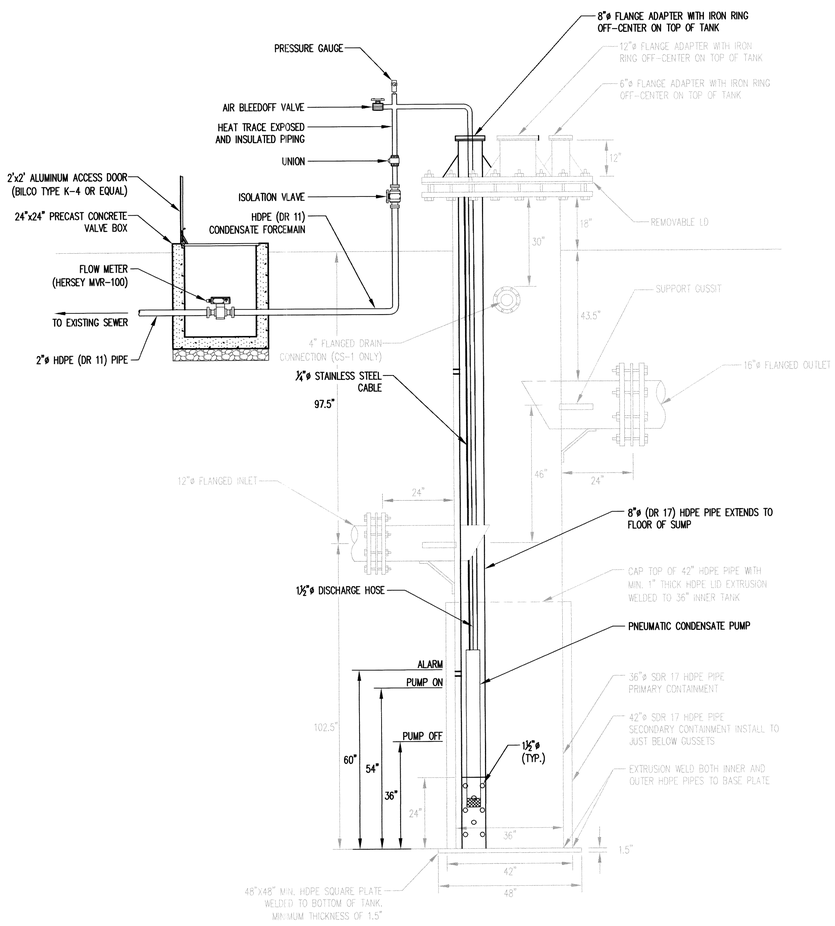

CONDENSATE SUMP

DETAIL 4/D1 NOT TO SCALE

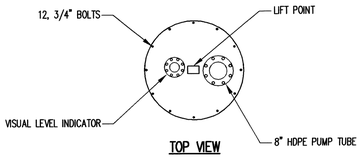

TOP VIEW

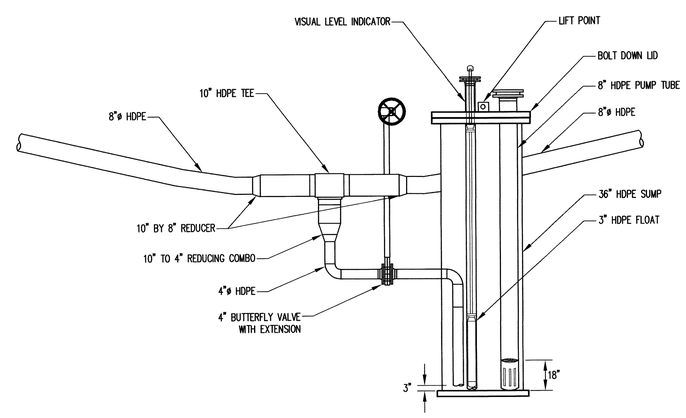

CONDENSATE PUMPING STATION

DETAIL 5/D1 NOT TO SCALE

PERMIT ISSUE

NOT FOR CONSTRUCTION

NO.	DATE	REVISION

RICHARDSON SMITH GARDNER & ASSOCIATES
Incl. L.A. NO. C-0293 (Engineering)
14 N. Boylan Ave.
Raleigh, N.C. 27603
ph: 919-828-0577
fax: 919-828-3899
www.rsgengineers.com

SEAL

NORTH CAROLINA PROFESSIONAL SEAL 023002 ENGINEER STACEY A. HUNT

PROJECT TITLE:
WAYNE COUNTY LANDFILL FACILITY
WAYNE COUNTY, NORTH CAROLINA
GAS SYSTEM EXPANSION

DRAWING TITLE:
LANDFILL GCCS DETAILS
(SHEET 1 OF 4)

DESIGNED BY: S.A.S.	DRAWN BY: C.T.J.
CHECKED BY:	PROJECT NO.: MPW 10-2
SCALE: AS SHOWN	DATE: JUNE 2012
FILE NAME: WAYNE-D0017	
SHEET NO. 8	DRAWING NO. D1

G:\CAD\Wayne County\MPW 10-2\fig Expansion\sheets\WAYNE-D0017.dwg - 6/22/2012 3:57 PM

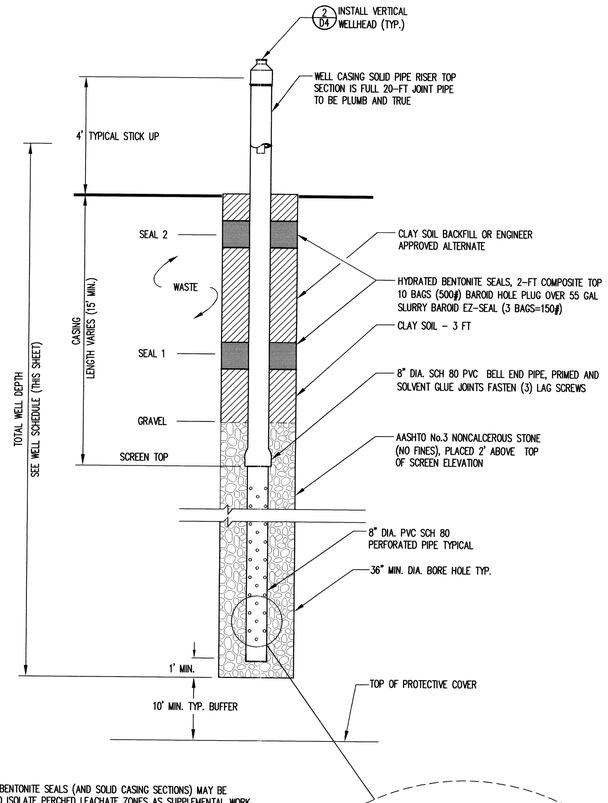

NOTES:
1. ADDITIONAL BENTONITE SEALS (AND SOLID CASING SECTIONS) MAY BE REQUIRED TO ISOLATE PERCHED LEACHATE ZONES AS SUPPLEMENTAL WORK.
2. DEWATERING AFTER SETTING CASING MAY BE DIRECTED BY ENGINEER AS SUPPLEMENTAL WORK.
3. A STICKUP OF 3' ABOVE FINAL COVER SHALL BE LEFT FOR PLACEMENT OF WELL HEAD.
4. EACH WELL LOCATION SHALL BE SURVEYED PRIOR TO INSTALLATION AND APPROVED BY THE ENGINEER.

LANDFILL GAS PRODUCTION WELL

DETAIL 1/D4
NOT TO SCALE

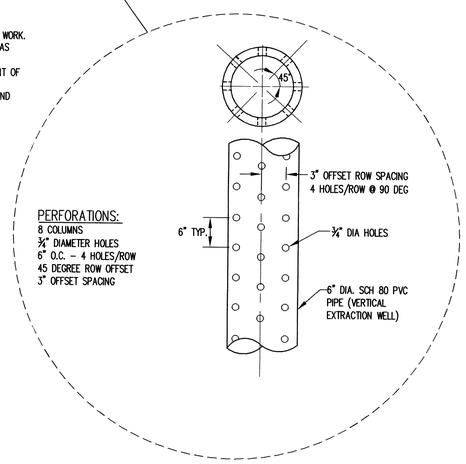

PERFORATIONS:
8 COLUMNS
¾" DIAMETER HOLES
6" O.C. - 4 HOLES/ROW
45 DEGREE ROW OFFSET
3" OFFSET SPACING

LANDFILL GAS EXTRACTION WELL SCHEDULE								
WELL NO.	NORTHING	EASTING	APPROX. BASE GRADE ELEVATION (FT-MSL) (REF. 2)	APPROX. SURFACE ELEVATION (FT-MSL) (REF. 1)	WASTE DEPTH (FT)	PROPOSED DRILL DEPTHS (FT)	PERF PIPE (FT)	SOLID PIPE (FT)
3GCW-13	563937.78	2276589.18	155.00	184.00	31	21	9	11
3GCW-14	564178.22	2276686.86	149.00	183.00	34	23	9	13
3GCW-15	564803.10	2277887.71	170.43	214.00	44	34	19	15
3GCW-16	2277986.59	2277986.59	170.69	213.00	42	32	17	15
3GCW-17	564648.43	2278086.68	168.74	212.00	43	33	18	15
3GCW-18	564586.65	2278193.66	166.67	205.75	36	26	11	15
2GCW-23	562653.48	2277755.83	150.00	172.00	22*	22	9	12
2GCW-24	562511.83	2277975.13	150.00	177.00	27*	27	11	15
2GCW-25	562351.93	2278161.97	150.00	180.00	30*	30	14	15
2GCW-26	562242.81	2277900.29	150.00	180.00	30*	30	14	15

* - WELLS 2GCW-23, 2GCW-24, 2GCW-25, AND 2GCW-26, ARE LOCATED IN UNIT 2, WHICH IS AN UNLINED UNIT.

WELL NOTES
1. DRILLING SHALL COMMENCE AFTER ENGINEERING APPROVAL ONLY. FIELD SURVEY WILL BE PERFORMED WITHIN SEVEN (7) DAYS OF DRILLING TO VERIFY LOCATIONS AND ELEVATIONS. DRILLING CONTRACTOR WILL BE PROVIDED ACTUAL DRILLING SCHEDULE PRIOR TO WORK BASED ON FIELD SURVEY.

REFERENCES:
1. APPROXIMATE SURFACE GRADE ELEVATIONS BASED ON EXISTING TOPOGRAPHIC CONDITIONS PROVIDED BY MUNICIPAL ENGINEERING SERVICES CO, PA FROM VARIOUS DATES.
2. APPROXIMATE BASE GRADE ELEVATIONS FROM MUNICIPAL ENGINEERING SERVICES CO, PA. ON 11/18/10 AND A SURVEY TAKEN BY OWEN SURVEYING, INC., DATED 11/19/98.

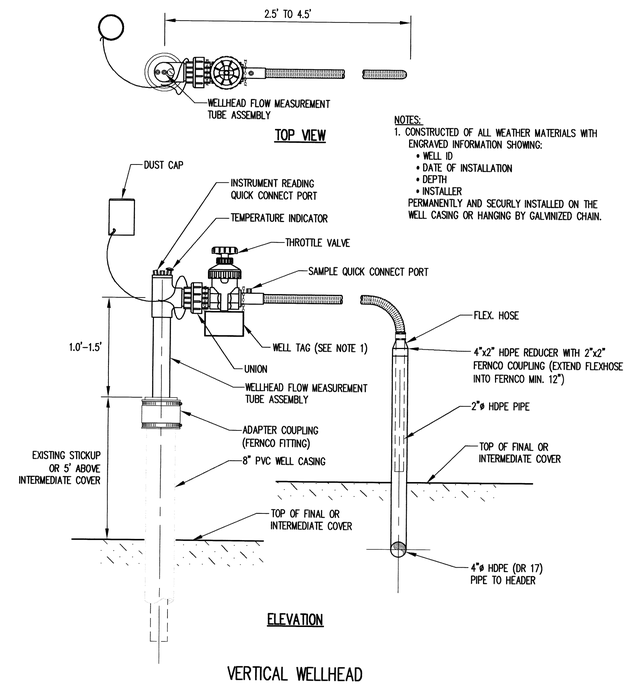

NOTES:
1. CONSTRUCTED OF ALL WEATHER MATERIALS WITH ENGRAVED INFORMATION SHOWING:
   - WELL ID
   - DATE OF INSTALLATION
   - DEPTH
   - INSTALLER

   PERMANENTLY AND SECURLY INSTALLED ON THE WELL CASING OR HANGING BY GALVINIZED CHAIN.

VERTICAL WELLHEAD

DETAIL 2/D4
NOT TO SCALE

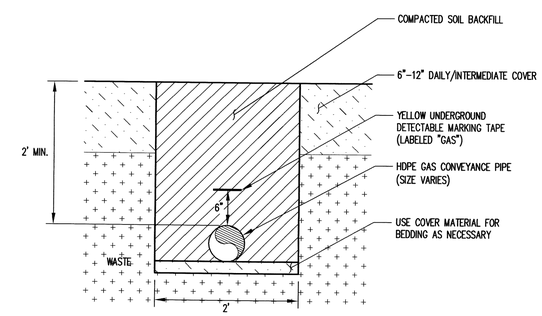

(IN WASTE)

NOTE:
1. WHERE AIR OR CONDENSATE ARE SHOWN, ALL PIPING CAN BE PLACED IN THE SAME TRENCH.

GAS CONVEYANCE PIPE TRENCH

DETAIL 3/D2
NOT TO SCALE

PERMIT ISSUE
NOT FOR CONSTRUCTION

RICHARDSON SMITH GARDNER & ASSOCIATES
NC LIC. NO. C-0828 (Engineering)
14 N. Boylan Ave.
Raleigh, N.C. 27603
ph: 919-828-0577
fax: 919-828-3899
www.rsgengineers.com

REVISION | NO. | DATE

SEAL

PROJECT TITLE: WAYNE COUNTY LANDFILL FACILITY
WAYNE COUNTY, NORTH CAROLINA
GAS SYSTEM EXPANSION

DRAWING TITLE: LANDFILL GCCS DETAILS (SHEET 2 OF 4)

DESIGNED BY: S.A.S.	DRAWN BY: C.T.J.
CHECKED BY:	PROJECT NO.: MPW 10-2
SCALE: AS SHOWN	DATE: JUNE 2012
FILE NAME: WAYNE-D0018	
SHEET NO. 9	DRAWING NO. D2

G:\CAD\Wayne County\MPW 10-2\fig Expansion\sheets\WAYNE-D0018.dwg - 6/25/2012 6:00 PM

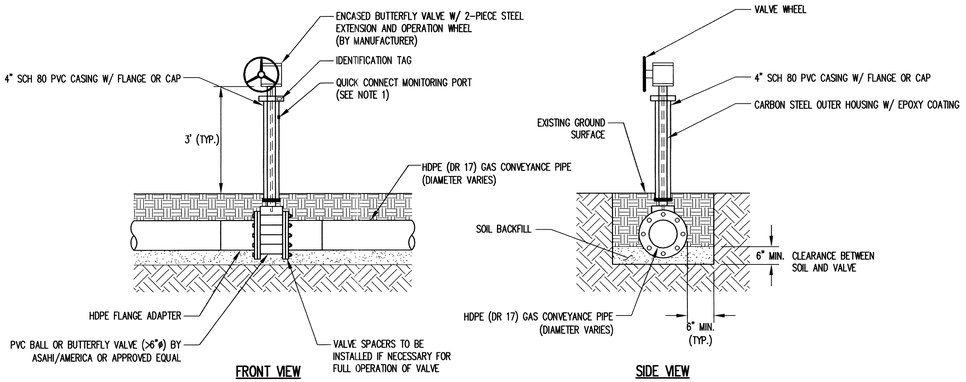

NOTE:
1. MONITORING PORT SHALL BE MANUFACTURED BY COLDER PRODUCTS COMPANY PMC 12 SERIES QUICK CONNECT COUPLINGS OR EQUIVALENT.

ISOLATION VALVE AND EXTENSION

DETAIL 1/D3
NOT TO SCALE

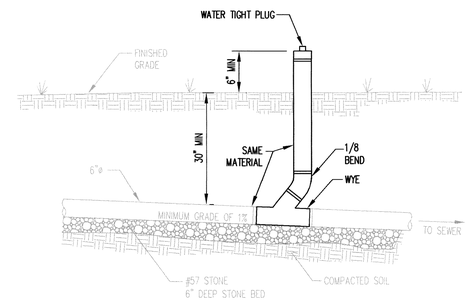

NOTES:
1. PLACE UP TO TWO (2) BOLLARDS AT EACH CLEANOUT AS DIRECTED BY THE OWNER.

SEWER LINE CLEANOUT

DETAIL 3/D3
NOT TO SCALE

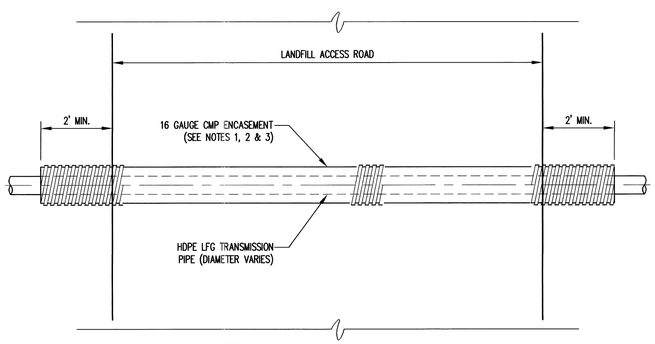

NOTES:
1. CMP ENCASEMENT DIAMETER SHALL BE AT LEAST 1.5x GAS PIPE DIAMETER.
2. MIN. 1.5 FT. COVER REQUIRED OVER CMP.
3. CONTRACTOR SHALL RESTORE ROAD TO ORIGINAL CONDITION, INCLUDING AGGREGATE SURFACING.

PIPE ENCASEMENT AT ROAD CROSSING

DETAIL 2/D3
NOT TO SCALE

PERMIT ISSUE
NOT FOR CONSTRUCTION

NO.	DATE	REVISION

RICHARDSON SMITH GARDNER & ASSOCIATES
ENGINEERS AND ARCHITECTS
14 N. Boylan Ave.
Raleigh, N.C. 27603
ph: 919-828-0577
fax: 919-828-3899
www.rsgengineers.com

SEAL

NORTH CAROLINA PROFESSIONAL SEAL 023002 ENGINEER STACEY SMITH

PROJECT TITLE:
WAYNE COUNTY LANDFILL FACILITY
WAYNE COUNTY, NORTH CAROLINA
GAS SYSTEM EXPANSION

DRAWING TITLE:
LANDFILL GCCS DETAILS
(SHEET 3 OF 4)

DESIGNED BY: S.A.S.	DRAWN BY: C.T.J.
CHECKED BY: CAP	PROJECT NO.: MPW 10-2
SCALE: AS SHOWN	DATE: JUNE 2012
FILE NAME: WAYNE-D0014	
SHEET NO. 10	DRAWING NO. D3

G:\CAD\Wayne County\MPW 10-2\fig Expansion\sheets\WAYNE-D0014.dwg - 6/22/2012 3:58 PM

PERMIT ISSUE
NOT FOR CONSTRUCTION

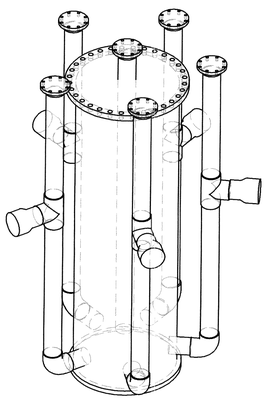

ISOMETRIC

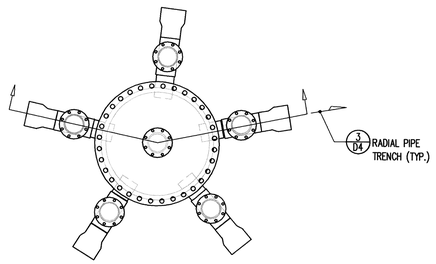

PLAN

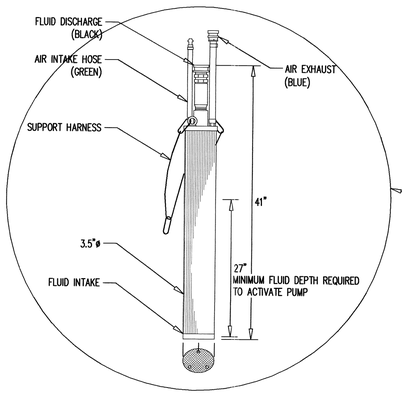

PNEUMATIC PUMP

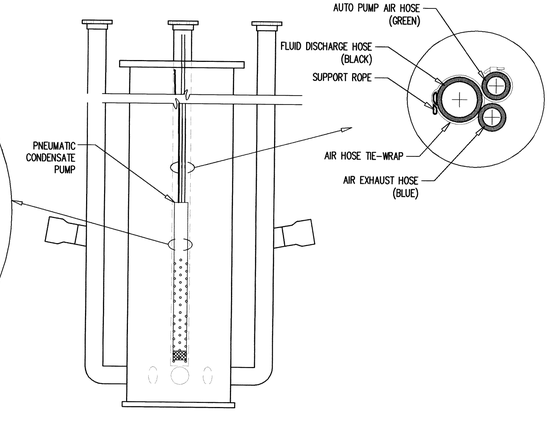

PNEUMATIC PUMP

SPIDER Collection Systems CH_4

RADIAL COLLECTOR

DETAIL 1/D4
NOT TO SCALE

PATENT PENDING

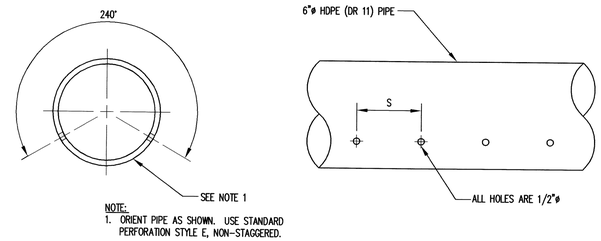

NOTE:
1. ORIENT PIPE AS SHOWN. USE STANDARD PERFORATION STYLE E, NON-STAGGERED.

RADIAL LFG COLLECTION PIPING

PERFORATION SCHEDULE – TYPE A (4 RADIAL EXTENSIONS)			
ZONE	DISTANCE FROM HUB (FEET)	S (INCHES)	REMARKS
1	0 TO 50	12	PERF STYLE E
2	50 TO 105	4	PERF STYLE E
3	105 TO 140	2	PERF STYLE E

PERFORATION SCHEDULE – TYPE B (5 RADIAL EXTENSIONS)			
ZONE	DISTANCE FROM HUB (FEET)	S (INCHES)	REMARKS
1	0 TO 80	10	PERF STYLE E
2	80 TO 120	4	PERF STYLE E
3	120 TO 150	3	PERF STYLE E

PERFORATION SCHEDULE – TYPE C (5 RADIAL EXTENSIONS)			
ZONE	DISTANCE FROM HUB (FEET)	S (FEET)	REMARKS
1	0 TO 80	13	SINGLE PERFORATIONS (BOTTOM CENTER)
2	80 TO 120	4	SINGLE PERFORATIONS
3	120 TO 150	0.5	SINGLE PERFORATIONS

HDPE PIPE PERFORATIONS

DETAIL 2/D4
NOT TO SCALE

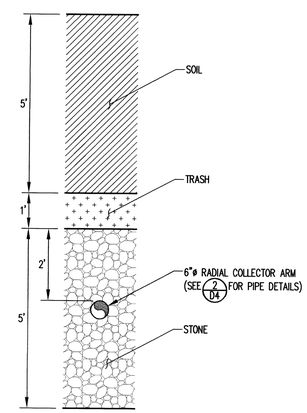

RADIAL PIPE TRENCH

DETAIL 3/D4
NOT TO SCALE

RICHARDSON SMITH GARDNER & ASSOCIATES
NC LIC. NO. C-0635 (Engineering)
14 N. Boylan Ave.
Raleigh, N.C. 27603
ph: 919-828-0577
fax: 919-828-3899
www.rsgengineers.com

REVISION	DATE	NO.

SEAL

NORTH CAROLINA PROFESSIONAL SEAL 023002 ENGINEER STACEY A. SMITH

PROJECT TITLE:
WAYNE COUNTY LANDFILL FACILITY
WAYNE COUNTY, NORTH CAROLINA
GAS SYSTEM EXPANSION

DRAWING TITLE:
LANDFILL GCCS DETAILS
(SHEET 4 OF 4)

DESIGNED BY:	DRAWN BY:
DAG	JAC
CHECKED BY:	PROJECT NO.:
LAD	MPW 10-2
SCALE:	DATE:
AS SHOWN	JUNE 2012
FILE NAME	
WAYNE-D0019	
SHEET NO.	DRAWING NO.
11	D4

G:\CAD\Wayne County\MPW 10-2\fig Expansion\sheets\WAYNE-D0019.dwg - 6/22/2012 4:27 PM