Water Quality Sampling and Analysis Plan

Prepared for

Wayne County Closed Unlined Municipal Solid Waste Landfill (Unit 1)
And
Active Construction and Demolition Landfill Over Closed Unlined Landfill (Unit 2)
Dudley, North Carolina

Permit 9601-CDLF-1997

MESCO Project Number: G11050.0

August 24, 2012

This revised plan supersedes the previous approved SAP dated October 22, 2009

D. Mark Durway, LG
Geologist

NORTH CAROLINA LICENSED SEAL 0875 GEOLOGIST D. MARK DURWAY

Jonathan Pfohl
Environmental Specialist

Municipal Services P.O. BOX 97 GARNER, N.C. 27529 (919) 772-5393
Engineering Company, P.A. P.O. BOX 349 BOONE, N.C. 28607 (828) 262-1767
LICENSE NUMBER: C-0281

TABLE OF CONTENTS

1 INTRODUCTION AND OBJECTIVE 1

2 MONITORING LOCATIONS AND SCHEDULE 1

2.1 MONITORING NETWORK 1
2.2 ASSESSMENT MONITORING 2
2.3 CORRECTIVE ACTION MONITORING 2

3 SAMPLING METHODOLOGY 3

4 QUALTIY CONTROL AND QUALITY ASSURANCE 3

5 LABORATORY ANALYSIS 3

6 CONCLUSION 4

TABLES

Summary of Water Quality Monitoring Locations ..... Table 1

FIGURES

Site Map with Monitoring Locations ..... Figure 1

APPENDICES

SWS Guidance Document (rev 4-08) ..... Appendix A

Gas Stripping Procedure ..... Appendix B

1 INTRODUCTION AND OBJECTIVE

This *Water Quality Sampling and Analysis Plan* (SAP) is designed to be effective in the detection of hazardous constituents and other monitoring parameters which may be released from the landfill to groundwater or surface water, as well as to monitor the fate, transport, and degradation of these parameters over time. This SAP applies specifically to Wayne County's Closed Unlined Landfill (Unit 1) and Active Construction and Demolition (C&D) Landfill Over Closed Unlined Municipal Solid Waste Landfill (Unit 2) in Dudley, NC, which are monitored together. This revised plan supersedes the previous approved SAP dated October 22, 2009.

2 MONITORING LOCATIONS AND SCHEDULE

2.1 Monitoring Network

The Closed Unlined Landfill (Unit 1) and Active Construction and Demolition Landfill Over Closed Unlined Municipal Solid Waste Landfill (Unit 2) are referred to collectively in this SAP as the landfill. The landfill is monitored by a network of eleven groundwater monitoring wells (MW-1, MW-2, MW-3, MW-4, MW-5, MW-6, MW-7, MW-8, MW-9, MW-10 and MW-11) and three surface water monitoring locations (SW-1, SW-2, and SW-3). Sample location data are provided in **Table 1** and sample locations are shown in **Figure 1**.

The background sampling location for the landfill is monitoring well MW-1. In the interpretation of landfill monitoring data, data from MW-1 will be compared to data from the other monitoring wells.

Groundwater quality at Unit 1 is monitored by MW-4, MW-6, MW-8, MW-9 and MW-10. MW-4 monitors the northeastern half of Unit 1. MW-6 monitors the north central portion of Unit 1. MW-8 monitors the south portion of Unit 1. MW-9 and MW-10 monitor approximately 150 feet and 180 feet east and west of MW-8, respectively, and were installed to delineate contamination previously detected in MW-8.

Groundwater quality at Unit 2 and the C&D Landfill is monitored by MW-2, MW-3, MW-5, MW-7 and MW-11. MW-2 is a downgradient well for the western portion of Unit 2 designed to monitor water quality between the landfill and the western tributary of Edwards Branch. MW-3 monitors the northeastern portion of Unit 2. MW-5 monitors the northwest corner of Unit 2. MW-7 monitors the southwest corner of Unit 2. MW-11 monitors the western portion of Unit 2.

Surface water monitoring location SW-1 is located downstream of the landfill below the confluence of the unnamed eastern and western tributaries of Edwards Branch. Surface water monitoring location SW-2 is located upstream of the landfill along the western tributary of Edwards Branch. Surface water monitoring location SW-3 is located along the unnamed eastern tributary of Edwards Branch northeast of Unit 1.

2.2 Assessment Monitoring

All monitoring wells (MW-1, MW-2, MW-3, MW-4, MW-5, MW-6, MW-7, MW-8, MW-9, MW-10 and MW-11) and surface water monitoring locations (SW-1, SW-2 and SW-3) shall be monitored semi-annually on the following alternating analysis schedule: during the initial semi-annual sampling event, all groundwater samples shall be analyzed for the full 40 CFR 258 Appendix II parameter list, and for the subsequent semi-annual sampling event, all groundwater samples shall be analyzed for the full Appendix I parameter list plus any Appendix II constituents detected during the preceding semi-annual sampling event. Semi-annual monitoring has been ongoing at the landfill for many years and shall continue using the established alternating schedule of Appendix I plus any Appendix II detections in February and Appendix II in August.

Surface water sample locations will be monitored semi-annually for the constituents listed in Appendix I 40 CFR Part 258.

Stabilized field parameters including dissolved oxygen (DO), oxidation-reduction potential (ORP), pH, temperature, and conductivity will be recorded during each sampling event at all groundwater and surface water monitoring locations.

2.3 Corrective Action Monitoring

In addition to the assessment monitoring described in Section 2.2, wells MW-1, MW-2 and MW-8 shall also be sampled and analyzed for the following parameters:

Alkalinity, sulfate, sulfide, total organic carbon, chemical oxygen demand, iron, chloride, nitrate and turbidity-shall be reported annually (once per year).

Hydrogen, volatile fatty acids, methane, ethane, ethene, and biochemical oxygen demand shall be reported biennially (once every two years).

3 SAMPLING METHODOLOGY

Water quality sampling shall be performed in accordance with the most current SWS Guidance Document. A copy of the *NC Solid Waste Section Guidelines for Groundwater, Soil, and Surface Water Sampling* (Rev 4-08) is included in **Appendix A**. Dissolved gas sampling for hydrogen, methane, ethane and ethene is currently performed using the "bubble-strip" gas stripping procedure described in **Appendix B.** Deviation from procedures outlined in this plan may be warranted depending on facility conditions or unforeseen sampling variables. Any variance from the methodology contained in the current SWS Guidance Document will be consistent with industry standards and be described in the corresponding water quality monitoring report.

4 QUALTIY CONTROL AND QUALITY ASSURANCE

Quality Assurance (QA) can be described as an integrated system of activities in the area of quality planning, assessment, and improvement to provide the project with a measurable assurance that the established standards of quality are met. Quality Control (QC) checks, including both field and laboratory, are the specific operational techniques and activities used to fulfill the QA requirements. Proper sample acquisition and handling procedures are necessary to ensure the integrity of the analytical results. All procedures will be followed in the field and the laboratory during every event.

Field QC measures will include the use of equipment blanks (EB) and travel blanks (TB). Equipment blanks will typically consist of collecting samples from laboratory provided water that has been rinsed within and on bailers and or pumps. Equipment blanks are utilized to determine if field and or laboratory induced cross-contamination may have affected the accompanying water sample results. Travel blanks will originate from the laboratory and remain sealed and stored along with other samples. Travel blanks are used to identify laboratory-induced artifact contamination.

A chain-of-custody record will be completed for each set of samples submitted, describing each sample, the number of containers, the sample location, the date and time, the laboratory analyses to be conducted, temperature of samples, the signature of the sampler and everyone through whom the samples change hands including the dates and times of the transfers.

After the samples are logged in by the laboratory, the handling and analysis of samples will be performed in accordance with QA/QC procedures established by a NC-certified laboratory.

5 LABORATORY ANALYSIS

Water quality analysis will be performed by an independent NC-certified analytical laboratory. Laboratory analytical results will be reported to the laboratory established method detection limits which are at or below limits required by the SWS.

6 CONCLUSION

This SAP is designed to be effective in the detection of hazardous constituents and other monitoring parameters which may be released from the landfill to groundwater or surface water, as well as to monitor the fate, transport, and degradation of these parameters over time. Should it be determined that additional monitoring is necessary, appropriate recommendations will be made.

Table 1 Summary of Existing Water Quality Monitoring Locations

Sampling Point	Monitoring Type	Gradient in Relation to Landfill	Screen Interval (feet below ground)	Monitored Unit
MW-1	AM & CA	Up	20-25	Both (Units 1 & 2)
MW-2	AM & CA	Down	10-15	Active C&D and Closed MSWLF (Unit 2)
MW-3	AM	Down	12-18	Active C&D and Closed MSWLF (Unit 2)
MW-4	AM	Down	10-15	Closed MSWLF (Unit 1)
MW-5	AM	Down	3-18	Active C&D and Closed MSWLF (Unit 2)
MW-6	AM	Down	3-18	Closed MSWLF (Unit 1)
MW-7	AM	Down	4-19	Active C&D and Closed MSWLF (Unit 2)
MW-8	AM & CA	Up	14-29	Closed MSWLF (Unit 1)
MW-9	AM	Up	10-25	Closed MSWLF (Unit 1)
MW-10	AM	Cross	10-25	Closed MSWLF (Unit 1)
MW-11	AM	Down	5-15	Active C&D and Closed MSWLF (Unit 2)
SW-1	DM	Down Stream		Eastern & Western Tributary Confluence
SW-2	DM	Up Stream		Western Tributary
SW-3	DM	Down Stream		Eastern Tributary

AM = Assessment Monitoring (alternating semi-annual analysis of Appendix II and Appendix I plus Appendix II detections)
DM = Detection Monitoring (semi-annual analysis of Appendix I)
CA = Corrective Action Monitoring (annual and biennial analysis of select MNA parameters)

Figures

TOPOGRAPHY IS FROM AERIAL PHOTOGRAPHY FLOWN AND A TOP0GRAPHIC MAP WAS PROVIDED BY DARREL S. MILLER, PLS ON 8/17/2007 AND SUPPLEMENTED WITH FIELD SURVEYS BY MUNICIPAL ENGINEERING SERVICES COMPANY, PA.

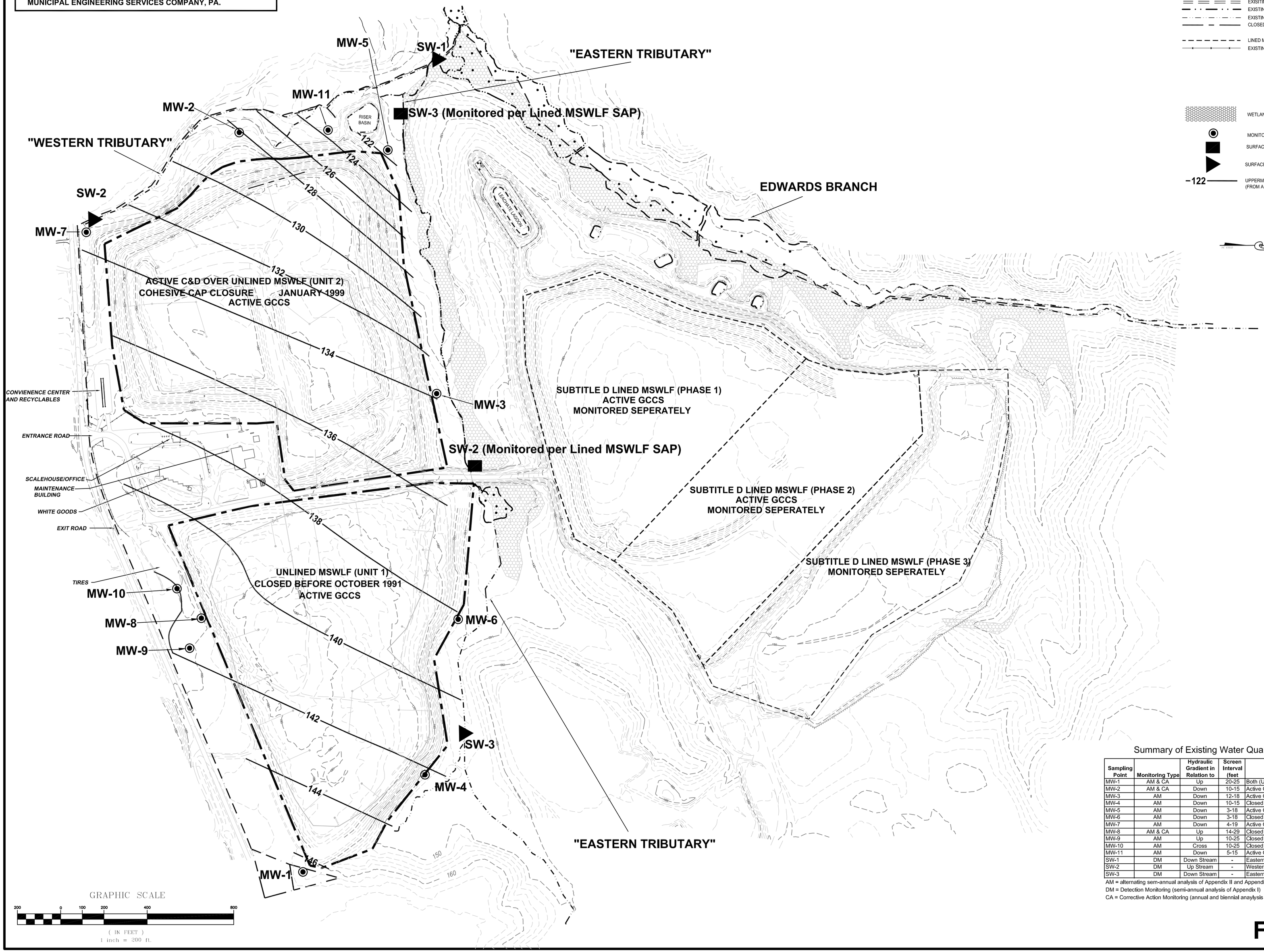

LEGEND

- EXISTING TOPOGRAPHIC CONTOURS
- PROPERTY LINE
- EXISITING UNPAVED ROAD
- EXISTING CREEK, STREAM, ETC.
- EXISTING DIVERSION DITCHES
- CLOSED MSWLF ESTIMATED EXTENT OF WASTE
- LINED MSWLF PHASE LIMITS
- EXISTING CHAINLINK FENCE
- WETLANDS
- MONITORING WELL
- SURFACE WATER MONITOIRNG POINT (LINED MSWLF)
- SURFACE WATER MONITOIRNG POINT (CLOSED MSWLF)
- −122 UPPERMOST POTENIOMETRIC GROUNDWATER CONTOUR (FROM AUGUST 16, 2011 GROUNDWATER ELEVEVATIONS)

Summary of Existing Water Quality Monitoring Points

Sampling Point	Monitoring Type	Hydraulic Gradient in Relation to	Screen Interval (feet	Monitored Unit
MW-1	AM & CA	Up	20-25	Both (Units 1 & 2)
MW-2	AM & CA	Down	10-15	Active C&D and Closed MSWLF (Unit 2)
MW-3	AM	Down	12-18	Active C&D and Closed MSWLF (Unit 2)
MW-4	AM	Down	10-15	Closed MSWLF (Unit 1)
MW-5	AM	Down	3-18	Active C&D and Closed MSWLF (Unit 2)
MW-6	AM	Down	3-18	Closed MSWLF (Unit 1)
MW-7	AM	Down	4-19	Active C&D and Closed MSWLF (Unit 2)
MW-8	AM & CA	Up	14-29	Closed MSWLF (Unit 1)
MW-9	AM	Up	10-25	Closed MSWLF (Unit 1)
MW-10	AM	Cross	10-25	Closed MSWLF (Unit 1)
MW-11	AM	Down	5-15	Active C&D and Closed MSWLF (Unit 2)
SW-1	DM	Down Stream	-	Eastern & Western Tributary Confluence
SW-2	DM	Up Stream	-	Western Tributary
SW-3	DM	Down Stream	-	Eastern Tributary

AM = alternating sem-annual analysis of Appendix II and Appendix I plus Appendix II detections
DM = Detection Monitoring (semi-annual analysis of Appendix I)
CA = Corrective Action Monitoring (annual and biennial anaylysis of select MNA paramateres)

FIGURE 1

Municipal Engineering Services Company, P.A.
P.O. BOX 97 GARNER, N.C. 27529 (919) 772-5393
P.O. BOX 349 BOONE, N.C. 28607 (828) 262-1767
LICENSE NUMBER: C-0281

ACTIVE C&D AND CLOSED MSW LANDFILL FACILIITY (DUDLEY)
WAYNE COUNTY
NORTH CAROLINA

DATE	BY	REV.	DESCRIPTION

SITE MAP WITH MONITORING LOCATIONS

SCALE: 1" = 200'
DATE: 8/23/12
DRWN. BY: J. PFOHL
CHKD. BY: M. DURWAY
PROJECT NUMBER G11050.0
DRAWING NO. FIGURE 1
SHEET NO. 1 OF 1

Appendix A
SWS Guidance Document
(Intended to be most recent version)

Solid Waste Section
Guidelines for Groundwater, Soil, and Surface Water Sampling

STATE OF NORTH CAROLINA
DEPARTMENT OF ENVIRONMENT AND NATURAL RESOURCES
DIVISION OF WASTE MANAGEMENT
SOLID WASTE SECTION

General Sampling Procedures

The following guidance is provided to insure a consistent sampling approach so that sample collection activities at solid waste management facilities provide reliable data. Sampling must begin with an evaluation of facility information, historical environmental data and site geologic and hydrogeologic conditions. General sampling procedures are described in this document.

Planning

Begin sampling activities with planning and coordination. The party contracting with the laboratory is responsible for effectively communicating reporting requirements and evaluating data reliability as it relates to specific monitoring activities.

Sample Collection

<u>Contamination Prevention</u>

a.) Take special effort to prevent cross contamination or environmental contamination when collecting samples.
    1. If possible, collect samples from the least contaminated sampling location (or background sampling location, if applicable) to the most contaminated sampling location.
    2. Collect the ambient or background samples first, and store them in separate ice chests or separate shipping containers within the same ice chest (e.g. untreated plastic bags).
    3. Collect samples in flowing water at designated locations from upstream to downstream.

b.) Do not store or ship highly contaminated samples (concentrated wastes, free product, etc.) or samples suspect of containing high concentrations of contaminants in the same ice chest or shipping containers with other environmental samples.
    1. Isolate these sample containers by sealing them in separate, untreated plastic bags immediately after collecting, preserving, labeling, etc.
    2. Use a clean, untreated plastic bag to line the ice chest or shipping container.

c.) All sampling equipment should be thoroughly decontaminated and transported in a manner that does not allow it to become contaminated. Arrangements should be made ahead of time to decontaminate any sampling or measuring equipment that will be reused when taking samples from more than one well. Field decontamination of

sampling equipment will be necessary before sampling each well to minimize the risk of cross contamination. Decontamination procedures should be included in reports as necessary. Certified pre-cleaned sampling equipment and containers may be used. When collecting aqueous samples, rinse the sample collection equipment with a portion of the sample water before taking the actual sample. Sample containers do not need to be rinsed. In the case of petroleum hydrocarbons, oil and grease, or containers with pre-measured preservatives, the sample containers cannot be rinsed.

d.) Place all fuel-powered equipment away from, and downwind of, any site activities (e.g., purging, sampling, decontamination).

1. If field conditions preclude such placement (i.e., the wind is from the upstream direction in a boat), place the fuel source(s) as far away as possible from the sampling activities and describe the conditions in the field notes.
2. Handle fuel (i.e., filling vehicles and equipment) prior to the sampling day. If such activities must be performed during sampling, the personnel must wear disposable gloves.
3. Dispense all fuels downwind. Dispose of gloves well away from the sampling activities.

<u>Filling Out Sample Labels</u>

Fill out label, adhere to vial and collect sample. Print legibly with indelible ink. At a minimum, the label or tag should identify the sample with the following information:

1. Sample location and/or well number
2. Sample identification number
3. Date and time of collection
4. Analysis required/requested
5. Sampler's initials
6. Preservative(s) used, if any [i.e., HCl, $Na_2S_2O_3$, NO_3, ice, etc.]
7. Any other pertinent information for sample identification

<u>Sample Collection Order</u>

Unless field conditions justify other sampling regimens, collect samples in the following order:

1. Volatile Organics and Volatile Inorganics
2. Extractable Organics, Petroleum Hydrocarbons, Aggregate Organics and Oil and Grease
3. Total Metals
4. Inorganic Nonmetallics, Physical and Aggregate Properties, and Biologicals
5. Microbiological

NOTE: *If the pump used to collect groundwater samples cannot be used to collect volatile or extractable organics then collect all other parameters and withdraw the pump and tubing. Then collect the volatile and extractable organics.*

Health and Safety

Implement all local, state, and federal requirements relating to health and safety. Follow all local, state and federal requirements pertaining to the storage and disposal of any hazardous or investigation derived wastes.

a.) The Solid Waste Section recommends wearing protective gloves when conducting all sampling activities.

1. Gloves serve to protect the sample collector from potential exposure to sample constituents, minimize accidental contamination of samples by the collector, and preserve accurate tare weights on preweighed sample containers.
2. Do not let gloves come into contact with the sample or with the interior or lip of the sample container. Use clean, new, unpowdered and disposable gloves. Various types of gloves may be used as long as the construction materials do not contaminate the sample or if internal safety protocols require greater protection.
3. Note that certain materials that may potentially be present in concentrated effluent can pass through certain glove types and be absorbed in the skin. Many vendor catalogs provide information about the permeability of different gloves and the circumstances under which the glove material might be applicable. The powder in powdered gloves can contribute significant contamination. Powdered gloves are not recommended unless it can be demonstrated that the powder does not interfere with the sample analysis.
4. Change gloves after preliminary activities, after collecting all the samples at a single sampling point, if torn or used to handle extremely dirty or highly contaminated surfaces. Properly dispose of all used gloves as investigation derived wastes.

b.) Properly manage all investigation derived waste (IDW).

5. To prevent contamination into previously uncontaminated areas, properly manage all IDW. This includes all water, soil, drilling mud, decontamination wastes, discarded personal protective equipment (PPE), etc. from site investigations, exploratory borings, piezometer and monitoring well installation, refurbishment, abandonment, and other investigative activities. Manage all IDW that is determined to be RCRA-regulated hazardous waste according to the local, state and federal requirements.
6. Properly dispose of IDW that is not a RCRA-regulated hazardous waste but is contaminated above the Department's Soil Cleanup Target Levels or the state standards and/or minimum criteria for ground water quality. If the drill cuttings/mud orpurged well water is contaminated with hazardous waste, contact the DWM Hazardous Waste Section (919-508-8400) for disposal options. Maintain all containers holding IDW in good condition. Periodically inspect the containers for damage and ensure that all required labeling (DOT, RCRA, etc.) are clearly visible.

Sample Storage and Transport

Store samples for transport carefully. Pack samples to prevent from breaking and to maintain a temperature of approximately 4 degrees Celsius (°C), adding ice if necessary. Transport samples to a North Carolina-certified laboratory as soon as possible. Avoid unnecessary handling of sample containers. Avoid heating (room temperature or above, including exposure to sunlight) or freezing of the sample containers. Reduce the time between sample collection and delivery to a laboratory whenever possible and be sure that the analytical holding times of your samples can be met by the laboratory.

a.) A complete chain-of-custody (COC) form must be maintained to document all transfers and receipts of the samples. Be sure that the sample containers are labeled with the sample location and/or well number, sample identification, the date and time of collection, the analysis to be performed, the preservative added (if any), the sampler's initials, and any other pertinent information for sample identification. The labels should contain a unique identifier (i.e., unique well numbers) that can be traced to the COC form. The details of sample collection must be documented on the COC. The COC must include the following:

1. Description of each sample (including QA/QC samples) and the number of containers (sample location and identification)
2. Signature of the sampler
3. Date and time of sample collection
4. Analytical method to be performed
5. Sample type (i.e., water or soil)
6. Regulatory agency (i.e., NCDENR/DWM – SW Section)
7. Signatures of all persons relinquishing and receiving custody of the samples
8. Dates and times of custody transfers

b.) Pack samples so that they are segregated by site, sampling location or by sample analysis type. When COC samples are involved, segregate samples in coolers by site. If samples from multiple sites will fit in one cooler, they may be packed in the same cooler with the associated field sheets and a single COC form for all. Coolers should not exceed a maximum weight of 50 lbs. Use additional coolers as necessary. All sample containers should be placed in plastic bags (segregated by analysis and location) and completely surrounded by ice.

1. Prepare and place trip blanks in an ice filled cooler before leaving for the field.
2. Segregate samples by analysis and place in sealable plastic bags.
3. Pack samples carefully in the cooler placing ice around the samples.
4. Review the COC. The COC form must accompany the samples to the laboratory. The trip blank(s) must also be recorded on the COC form.
5. Place completed COC form in a waterproof bag, sealed and taped under the lid of the cooler.
6. Secure shipping containers with strapping tape to avoid accidental opening.
7. For COC samples, a tamper-proof seal may also be placed over the cooler lid or over a bag or container containing the samples inside the shipping cooler.

8. "COC" or "EMERG" should be written in indelible ink on the cooler seal to alert sample receipt technicians to priority or special handling samples.
9. The date and sample handler's signature must also be written on the COC seal.
10. Deliver the samples to the laboratory or ship by commercial courier.
    NOTE*: If transport time to the laboratory is not long enough to allow samples to be cooled to 4° C, a temperature reading of the sample source must be documented as the field temperature on the COC form. A downward trend in temperature will be adequate even if cooling to 4° C is not achieved. The field temperature should always be documented if there is any question as to whether samples will have time to cool to 4° C during shipment. Thermometers must be calibrated annually against an NIST traceable thermometer and documentation must be retained.*

Appendix A - Decontamination of Field Equipment

Decontamination of personnel, sampling equipment, and containers - before and after sampling - must be used to ensure collection of representative samples and to prevent the potential spread of contamination. Decontamination of personnel prevents ingestion and absorption of contaminants. It must be done with a soap and water wash and deionized or distilled water rinse. Certified pre-cleaned sampling equipment and containers may also be used.

All previously used sampling equipment must be properly decontaminated before sampling and between sampling locations. This prevents the introduction of contamination into uncontaminated samples and avoids cross-contamination of samples. Cross-contamination can be a significant problem when attempting to characterize extremely low concentrations of organic compounds or when working with soils that are highly contaminated.

Clean, solvent-resistant gloves and appropriate protective equipment must be worn by persons decontaminating tools and equipment.

Cleaning Reagents

Recommendations for the types and grades of various cleaning supplies are outlined below. The recommended reagent types or grades were selected to ensure that the cleaned equipment is free from any detectable contamination.

a.) Detergents: Use Liqui-Nox (or a non-phosphate equivalent) or Alconox (or equivalent). Liqui-Nox (or equivalent) is recommended by EPA, although Alconox (or equivalent) may be substituted if the sampling equipment will not be used to collect phosphorus or phosphorus containing compounds.

b.) Solvents: Use pesticide grade isopropanol as the rinse solvent in routine equipment cleaning procedures. This grade of alcohol must be purchased from a laboratory supply vendor. Rubbing alcohol or other commonly available sources of isopropanol **are not acceptable**. Other solvents, such as acetone or methanol, may be used as the final rinse solvent if they are pesticide grade. However, methanol is more toxic to the environment and acetone may be an analyte of interest for volatile organics.

1. **Do not** use acetone if volatile organics are of interest
2. Containerize all methanol wastes (including rinses) and dispose as a hazardous waste.

Pre-clean equipment that is heavily contaminated with organic analytes. Use reagent grade acetone and hexane or other suitable solvents. Use pesticide grade methylene chloride when cleaning sample containers. Store all solvents away from potential sources of contamination.

c.) Analyte-Free Water Sources: Analyte-free water is water in which all analytes of interest and all interferences are below method detection limits. Maintain documentation (such as results from equipment blanks) to demonstrate the reliability and purity of analyte-free water source(s). The source of the water must meet the requirements of the analytical method and must be free from the analytes of interest. In general, the following water types are associated with specific analyte groups:

1. *Milli-Q (or equivalent polished water)*: suitable for all analyses.

2. *Organic-free*: suitable for volatile and extractable organics.
3. *Deionized water*: may not be suitable for volatile and extractable organics.
4. *Distilled water*: not suitable for volatile and extractable organics, metals or ultratrace metals.

Use analyte-free water for blank preparation and the final decontamination water rinse. In order to minimize long-term storage and potential leaching problems, obtain or purchase analyte-free water just prior to the sampling event. If obtained from a source (such as a laboratory), fill the transport containers and use the contents for a single sampling event. Empty the transport container(s) at the end of the sampling event. Discard any analyte-free water that is transferred to a dispensing container (such as a wash bottle or pump sprayer) at the end of each sampling day.

d.) Acids:

1. *Reagent Grade Nitric Acid*: 10 - 15% (one volume concentrated nitric acid and five volumes deionized water). Use for the acid rinse unless nitrogen components (e.g., nitrate, nitrite, etc.) are to be sampled. If sampling for ultra-trace levels of metals, use an ultra-pure grade acid.
2. *Reagent Grade Hydrochloric Acid*: 10% hydrochloric acid (one volume concentrated hydrochloric and three volumes deionized water). Use when nitrogen components are to be sampled.
3. If samples for both metals and the nitrogen-containing components are collected with the equipment, use the hydrochloric acid rinse, or thoroughly rinse with hydrochloric acid after a nitric acid rinse. If sampling for ultra trace levels of metals, use an ultra-pure grade acid.
4. Freshly prepared acid solutions may be recycled during the sampling event or cleaning process. Dispose of any unused acids according to local ordinances.

Reagent Storage Containers

The contents of all containers must be clearly marked.

a.) Detergents:

1. Store in the original container or in a HDPE or PP container.

b.) Solvents:

1. Store solvents to be used for cleaning or decontamination in the original container until use in the field. If transferred to another container for field use, use either a glass or Teflon container.
2. Use dispensing containers constructed of glass, Teflon or stainless steel. Note: If stainless steel sprayers are used, any gaskets that contact the solvents must be constructed of inert materials.

c.) Analyte-Free Water:

1. Transport in containers appropriate for the type of water stored. If the water is commercially purchased (e.g., grocery store), use the original containers when transporting the water to the field. Containers made of glass, Teflon, polypropylene or HDPE are acceptable.
2. Use glass or Teflon to transport organic-free sources of water on-site. Polypropylene or HDPE may be used, but are not recommended.

3. Dispense water from containers made of glass, Teflon, HDPE or polypropylene.
4. Do not store water in transport containers for more than three days before beginning a sampling event.
5. If working on a project that has oversight from EPA Region 4, use glass containers for the transport and storage of all water.
6. Store and dispense acids using containers made of glass, Teflon or plastic.

General Requirements

a.) Prior to use, clean/decontaminate all sampling equipment (pumps, tubing, lanyards, split spoons, etc.) that will be exposed to the sample.

b.) Before installing, clean (or obtain as certified pre-cleaned) all equipment that is dedicated to a single sampling point and remains in contact with the sample medium (e.g., permanently installed groundwater pump). If you use certified pre-cleaned equipment no cleaning is necessary.

1. Clean this equipment any time it is removed for maintenance or repair.
2. Replace dedicated tubing if discolored or damaged.

c.) Clean all equipment in a designated area having a controlled environment (house, laboratory, or base of field operations) and transport it to the field, pre-cleaned and ready to use, unless otherwise justified.

d.) Rinse all equipment with water after use, even if it is to be field-cleaned for other sites. Rinse equipment used at contaminated sites or used to collect in-process (e.g., untreated or partially treated wastewater) samples immediately with water.

e.) Whenever possible, transport sufficient clean equipment to the field so that an entire sampling event can be conducted without the need for cleaning equipment in the field.

f.) Segregate equipment that is only used once (i.e., not cleaned in the field) from clean equipment and return to the in-house cleaning facility to be cleaned in a controlled environment.

g.) Protect decontaminated field equipment from environmental contamination by securely wrapping and sealing with one of the following:

1. Aluminum foil (commercial grade is acceptable)
2. Untreated butcher paper
3. Clean, untreated, disposable plastic bags. Plastic bags may be used for all analyte groups except volatile and extractable organics. Plastic bags may be used for volatile and extractable organics, if the equipment is first wrapped in foil or butcher paper, or if the equipment is completely dry.

Cleaning Sample Collection Equipment

a.) <u>On-Site/In-Field Cleaning</u> – Cleaning equipment on-site is not recommended because environmental conditions cannot be controlled and wastes (solvents and acids) must be containerized for proper disposal.

1. Ambient temperature water may be substituted in the hot, sudsy water bath and hot water rinses.

NOTE: Properly dispose of all solvents and acids.

2. Rinse all equipment with water after use, even if it is to be field-cleaned for other sites.
3. Immediately rinse equipment used at contaminated sites or used to collect in-process (e.g., untreated or partially treated wastewater) samples with water.

b.) Heavily Contaminated Equipment - In order to avoid contaminating other samples, isolate heavily contaminated equipment from other equipment and thoroughly decontaminate the equipment before further use. Equipment is considered heavily contaminated if it:

1. Has been used to collect samples from a source known to contain significantly higher levels than background.
2. Has been used to collect free product.
3. Has been used to collect industrial products (e.g., pesticides or solvents) or their byproducts.

NOTE: *Cleaning heavily contaminated equipment in the field is not recommended.*

c.) On-Site Procedures:

1. Protect all other equipment, personnel and samples from exposure by isolating the equipment immediately after use.
2. At a minimum, place the equipment in a tightly sealed, untreated, plastic bag.
3. Do not store or ship the contaminated equipment next to clean, decontaminated equipment, unused sample containers, or filled sample containers.
4. Transport the equipment back to the base of operations for thorough decontamination.
5. If cleaning must occur in the field, document the effectiveness of the procedure, collect and analyze blanks on the cleaned equipment.

d.) Cleaning Procedures:

1. If organic contamination cannot be readily removed with scrubbing and a detergent solution, pre-rinse equipment by thoroughly rinsing or soaking the equipment in acetone.
2. Use hexane only if preceded and followed by acetone.
3. In extreme cases, it may be necessary to steam clean the field equipment before proceeding with routine cleaning procedures.
4. After the solvent rinses (and/or steam cleaning), use the appropriate cleaning procedure. Scrub, rather than soak, all equipment with sudsy water. If high levels of metals are suspected and the equipment cannot be cleaned without acid rinsing, soak the equipment in the appropriate acid. Since stainless steel equipment should not be exposed to acid rinses, do not use stainless steel equipment when heavy metal contamination is suspected or present.
5. If the field equipment cannot be cleaned utilizing these procedures, discard unless further cleaning with stronger solvents and/or oxidizing solutions is effective as evidenced by visual observation and blanks.
6. Clearly mark or disable all discarded equipment to discourage use.

e.) General Cleaning - Follow these procedures when cleaning equipment under controlled conditions. Check manufacturer's instructions for cleaning restrictions and/or recommendations.

1. *Procedure for Teflon, stainless steel and glass sampling equipment*: This procedure must be used when sampling for ALL analyte groups. (Extractable organics, metals, nutrients, etc. or if a single decontamination protocol is desired to clean all Teflon, stainless steel and glass equipment.) Rinse equipment with hot tap water. Soak equipment in a hot, sudsy water solution (Liqui-Nox or equivalent). If necessary, use a brush to remove particulate matter or surface film. Rinse thoroughly with hot tap water. If samples for trace metals or inorganic analytes will be collected with the equipment that is not stainless steel, thoroughly rinse (wet all surfaces) with the appropriate acid solution. Rinse thoroughly with analyte-free water. Make sure that all equipment surfaces are thoroughly flushed with water. If samples for volatile or extractable organics will be collected, rinse with isopropanol. Wet equipment surfaces thoroughly with free-flowing solvent. Rinse thoroughly with analyte-free water. Allow to air dry. Wrap and seal as soon as the equipment has air-dried. If isopropanol is used, the equipment may be air-dried without the final analyte-free water rinse; however, the equipment must be completely dry before wrapping or use. Wrap clean sampling equipment according to the procedure described above.
2. *General Cleaning Procedure for Plastic Sampling Equipment*: Rinse equipment with hot tap water. Soak equipment in a hot, sudsy water solution (Liqui-Nox or equivalent). If necessary, use a brush to remove particulate matter or surface film. Rinse thoroughly with hot tap water. Thoroughly rinse (wet all surfaces) with the appropriate acid solution. Check manufacturer's instructions for cleaning restrictions and/or recommendations. Rinse thoroughly with analyte-free water. Be sure that all equipment surfaces are thoroughly flushed. Allow to air dry as long as possible. Wrap clean sampling equipment according to the procedure described above.

Appendix B - Collecting Soil Samples

Soil samples are collected for a variety of purposes. A methodical sampling approach must be used to assure that sample collection activities provide reliable data. Sampling must begin with an evaluation of background information, historical data and site conditions.

Soil Field Screening Procedures

Field screening is the use of portable devices capable of detecting petroleum contaminants on a real-time basis or by a rapid field analytical technique. Field screening should be used to help assess locations where contamination is most likely to be present.

When possible, field-screening samples should be collected directly from the excavation or from the excavation equipment's bucket. If field screening is conducted only from the equipment's bucket, then a minimum of one field screening sample should be collected from each 10 cubic yards of excavated soil. If instruments or other observations indicate contamination, soil should be separated into stockpiles based on apparent degrees of contamination. At a minimum, soil suspected of contamination must be segregated from soil observed to be free of contamination.

a.) Field screening devices – Many field screen instruments are available for detecting contaminants in the field on a rapid or real-time basis. Acceptable field screening instruments must be suitable for the contaminant being screened. The procdedure for field screening using photoionization detectors (PIDs) and flame ionization detectors (FIDs) is described below. If other instruments are used, a description of the instrument or method and its intended use must be provided to the Solid Waste Section. Whichever field screening method is chosen, its accuracy must be verified throughout the sampling process. Use appropriate standards that match the use intended for the data. Unless the Solid Waste Section indicates otherwise, wherever field screening is recommended in this document, instrumental or analytical methods of detection must be used, not olfactory or visual screening methods.

b.) Headspace analytical screening procedure for filed screening (semi-quantitative field screening) - The most commonly used field instruments for Solid Waste Section site assessments are FIDs and PIDs. When using FIDs and PIDs, use the following headspace screening procedure to obtain and analyze field-screening samples:

1. Partially fill (one-third to one-half) a clean jar or clean ziplock bag with the sample to be analyzed. The total capacity of the jar or bag may not be less than eight ounces (app. 250 ml), but the container should not be so large as to allow vapor diffusion and stratification effects to significantly affect the sample.
2. If the sample is collected from a spilt-spoon, it must be transferred to the jar or bag for headspace analysis immediately after opening the split-spoon. If the sample is collected from an excavation or soil pile, it must be collected from freshly uncovered soil.

3. If a jar is used, it must be quickly covered with clean aluminum foil or a jar lid; screw tops or thick rubber bands must be used to tightly seal the jar. If a zip lock bag is used, it must be quickly sealed shut.
4. Headspace vapors must be allowed to develop in the container for at least 10 minutes but no longer than one hour. Containers must be shaken or agitated for 15 seconds at the beginning and the end of the headspace development period to assist volatilization. Temperatures of the headspace must be warmed to at least 5° C (approximately 40° F) with instruments calibrated for the temperature used.
5. After headspace development, the instrument sampling probe must be inserted to a point about one-half the headspace depth. The container opening must be minimized and care must be taken to avoid the uptake of water droplets and soil particulates.
6. After probe insertion, the highest meter reading must be taken and recorded. This will normally occur between two and five seconds after probe insertion. If erratic meter response occurs at high organic vapor concentrations or conditions of elevated headspace moisture, a note to that effect must accompany the headspace data.
7. All field screening results must be documented in the field record or log book.

Soil Sample Collection Procedures for Laboratory Samples

The number and type of laboratory samples collected depends on the purpose of the sampling activity. Samples analyzed with field screening devices may not be substituted for required laboratory samples.

a.) General Sample Collection - When collecting samples from potentially contaminated soil, care should be taken to reduce contact with skin or other parts of the body. Disposable gloves should be worn by the sample collector and should be changed between samples to avoid cross-contamination. Soil samples should be collected in a manner that causes the least disturbance to the internal structure of the sample and reduces its exposure to heat, sunlight and open air. Likewise, care should be taken to keep the samples from being contaminated by other materials or other samples collected at the site. When sampling is to occur over an extended period of time, it is necessary to insure that the samples are collected in a comparable manner. All samples must be collected with disposable or clean tools that have been decontaminated. Disposable gloves must be worn and changed between sample collections. Sample containers must be filled quickly. Soil samples must be placed in containers in the order of volatility, for example, volatile organic aromatic samples must be taken first, organics next, then heavier range organics, and finally soil classification samples. Containers must be quickly and adequately sealed, and rims must be cleaned before tightening lids. Tape may be used only if known not to affect sample analysis. Sample containers must be clearly labeled. Containers must immediately be preserved according to procedures in this Section. Unless specified

otherwise, at a minimum, the samples must be immediately cooled to 4 ± 2°C and this temperature must be maintained throughout delivery to the laboratory.

b.) Surface Soil Sampling - Surface soil is generally classified as soil between the ground surface and 6-12 inches below ground surface. Remove leaves, grass and surface debris from the area to be sampled. Select an appropriate, pre-cleaned sampling device and collect the sample. Transfer the sample to the appropriate sample container. Clean the outside of the sample container to remove excess soil. Label the sample container, place on wet ice to preserve at 4°C, and complete the field notes.

c.) Subsurface Soil Sampling – The interval begins at approximately 12 inches below ground surface. Collect samples for volatile organic analyses. For other analyses, select an appropriate, pre-cleaned sampling device and collect the sample. Transfer the sample to the appropriate sample container. Clean the outside of the sample container to remove excess soil. Label the sample container, place on wet ice to preserve at 4°C, and complete field notes.

d.) Equipment for Reaching the Appropriate Soil Sampling Depth - Samples may be collected using a hollow stem soil auger, direct push, Shelby tube, split-spoon sampler, or core barrel. These sampling devices may be used as long as an effort is made to reduce the loss of contaminants through volatilization. In these situations, obtain a sufficient volume of so the samples can be collected without volatilization and disturbance to the internal structure of the samples. Samples should be collected from cores of the soil. Non-disposable sampling equipment must be decontaminated between each sample location. **NOTE:** *If a confining layer has been breached during sampling, grout the hole to land.*

e.) Equipment to Collect Soil Samples - Equipment and materials that may be used to collect soil samples include disposable plastic syringes and other "industry-standard" equipment and materials that are contaminant-free. Non-disposable sampling equipment must be decontaminated between each sample location.

Appendix C - Collecting Groundwater Samples

Groundwater samples are collected to identify, investigate, assess and monitor the concentration of dissolved contaminant constituents. To properly assess groundwater contamination, first install sampling points (monitoring wells, etc.) to collect groundwater samples and then perform specific laboratory analyses. All monitoring wells should be constructed in accordance with 15A NCAC 2C .0100 and sampled as outlined in this section. Groundwater monitoring is conducted using one of two methods:

1. Portable Monitoring: Monitoring that is conducted using sampling equipment that is discarded between sampling locations. Equipment used to collect a groundwater sample from a well such as bailers, tubing, gloves, and etc. are disposed of after sample collection. A new set of sampling equipment is used to collect a groundwater sample at the next monitor well.

2. Dedicated Monitoring: Monitoring that utilizes permanently affixed down-well and well head components that are capped after initial set-up. Most dedicated monitoring systems are comprised of an in-well submersible bladder pump, with air supply and sample discharge tubing, and an above-ground driver/controller for regulation of flow rates and volumes. The pump and all tubing housed within the well should be composed of Teflon or stainless steel components. This includes seals inside the pump, the pump body, and fittings used to connect tubing to the pump. Because ground water will not be in contact with incompatible constituents and because the well is sealed from the surface, virtually no contamination is possible from intrinsic sources during sampling and between sampling intervals. All dedicated monitoring systems must be approved by the Solid Waste Section before installation.

Groundwater samples may be collected from a number of different configurations. Each configuration is associated with a unique set of sampling equipment requirements and techniques:

1. Wells without Plumbing: These wells require equipment to be brought to the well to purge and sample unless dedicated equipment is placed in the well.

2. Wells with In-Place Plumbing: Wells with in-place plumbing do not require equipment to be brought to the well to purge and sample. In-place plumbing is generally considered permanent equipment routinely used for purposes other than purging and sampling, such as for water supply.

3. Air Strippers or Remedial Systems: These types of systems are installed as remediation devices.

Groundwater Sample Preparation

The type of sample containers used depends on the type of analysis performed. First, determine the type(s) of contaminants expected and the proper analytical method(s). Be sure to consult your selected laboratory for its specific needs and requirements prior to sampling.

Next, prepare the storage and transport containers (ice chest, etc.) before taking any samples so that each sample can be placed in a chilled environment immediately after collection.

Use groundwater purging and sampling equipment constructed of only non-reactive, non-leachable materials that are compatible with the environment and the selected analytes. In selecting groundwater purging and sampling equipment, give consideration to the depth of the well, the depth to groundwater, the volume of water to be evacuated, the sampling and purging technique, and the analytes of interest. Additional supplies, such as reagents and preservatives, may be necessary.

All sampling equipment (bailers, tubing, containers, etc.) must be selected based on its chemical compatibility with the source being sampled (e.g., water supply well, monitoring well) and the contaminants potentially present.

a.) Pumps - All pumps or pump tubing must be lowered and retrieved from the well slowly and carefully to minimize disturbance to the formation water. This is especially critical at the air/water interface.

1. *Above-Ground Pumps*
   - Variable Speed Peristaltic Pump: Use a variable speed peristaltic pump to purge groundwater from wells when the static water level in the well is no greater than 20- 25 feet below land surface (BLS). If the water levels are deeper than 18-20 feet BLS, the pumping velocity will decrease. A variable speed peristaltic pump can be used for normal purging and sampling, and sampling low permeability aquifers or formations. Most analyte groups can be sampled with a peristaltic pump if the tubing and pump configurations are appropriate.
   - Variable Speed Centrifugal Pump: A variable speed centrifugal pump can be used to purge groundwater from 2-inch and larger internal diameter wells. **Do not use** this type of pump to collect groundwater samples. When purging is complete, do not allow the water that remains in the tubing to fall back into the well. Install a check valve at the end of the purge tubing.
2. *Submersible Pumps*
   - Variable Speed Electric Submersible Pump: A variable speed submersible pump can be used to purge and sample groundwater from 2-inch and larger internal diameter wells. A variable speed submersible pump can be used for normal purging and sampling, and sampling low permeability aquifers or formations. The pump housing, fittings, check valves and associated hardware must be constructed of stainless steel. All other materials must be

compatible with the analytes of interest. Install a check valve at the output side of the pump to prevent backflow. If purging **and** sampling for organics, the entire length of the delivery tube must be Teflon, polyethylene or polypropylene (PP) tubing; the electrical cord must be sealed in Teflon, polyethylene or PP and any cabling must be sealed in Teflon, polyethylene or PP, or be constructed of stainless steel; and all interior components that contact the sample water (impeller, seals, gaskets, etc.) must be constructed of stainless steel or Teflon.

3. *Variable Speed Bladder Pump*: A variable speed, positive displacement, bladder pump can be used to purge and sample groundwater from 3/4-inch and larger internal diameter wells.
    - A variable speed bladder pump can be used for normal purging and sampling, and sampling low permeability aquifers or formations.
    - The bladder pump system is composed of the pump, the compressed air tubing, the water discharge tubing, the controller and a compressor, or a compressed gas supply.
    - The pump consists of a bladder and an exterior casing or pump body that surrounds the bladder and two (2) check valves. These parts can be composed of various materials, usually combinations of polyvinyl chloride (PVC), Teflon, polyethylene, PP and stainless steel. Other materials must be compatible with the analytes of interest.
    - If purging and sampling for organics, the pump body must be constructed of stainless steel. The valves and bladder must be Teflon, polyethylene or PP; the entire length of the delivery tube must be Teflon, polyethylene or PP; and any cabling must be sealed in Teflon, polyethylene or PP, or be constructed of stainless steel.
    - Permanently installed pumps may have a PVC pump body as long as the pump remains in contact with the water in the well.

b.) <u>Bailers</u>

1. *Purging*: Bailers must be used with caution because improper bailing can cause changes in the chemistry of the water due to aeration and loosening particulate matter in the space around the well screen. Use a bailer if there is non-aqueous phase liquid (free product) in the well or if non-aqueous phase liquid is suspected to be in the well.
2. *Sampling*: Bailers must be used with caution.
3. *Construction and Type*: Bailers must be constructed of materials compatible with the analytes of interest. Stainless steel, Teflon, rigid medical grade PVC, polyethylene and PP bailers may be used to sample all analytes. Use disposable bailers when sampling grossly contaminated sample sources. NCDENR recommends using dual check valve bailers when collecting samples. Use bailers with a controlled flow bottom to collect volatile organic samples.

4. *Contamination Prevention*: Keep the bailer wrapped (foil, butcher paper, etc.) until just before use. Use protective gloves to handle the bailer once it is removed from its wrapping. Handle the bailer by the lanyard to minimize contact with the bailer surface.

c.) Lanyards

1. Lanyards must be made of non-reactive, non-leachable material. They may be cotton twine, nylon, stainless steel, or may be coated with Teflon, polyethylene or PP.
2. Discard cotton twine, nylon, and non-stainless steel braided lanyards after sampling each monitoring well.
3. Decontaminate stainless steel, coated Teflon, polyethylene and PP lanyards between monitoring wells. They do not need to be decontaminated between purging and sampling operations.

Water Level and Purge Volume Determination

The amount of water that must be purged from a well is determined by the volume of water and/or field parameter stabilization.

a.) General Equipment Considerations - Selection of appropriate purging equipment depends on the analytes of interest, the well diameter, transmissivity of the aquifer, the depth to groundwater, and other site conditions.

1. Use of a pump to purge the well is recommended unless no other equipment can be used or there is non-aqueous phase liquid in the well, or non-aqueous phase liquid is suspected to be in the well.
2. Bailers must be used with caution because improper bailing:
    - Introduces atmospheric oxygen, which may precipitate metals (i.e., iron) or cause other changes in the chemistry of the water in the sample (i.e., pH).
    - Agitates groundwater, which may bias volatile and semi-volatile organic analyses due to volatilization.
    - Agitates the water in the aquifer and resuspends fine particulate matter.
    - Surges the well, loosening particulate matter in the annular space around the well screen.
    - May introduce dirt into the water column if the sides of the casing wall are scraped.

NOTE: *It is critical for bailers to be slowly and gently immersed into the top of the water column, particularly during the final stages of purging. This minimizes turbidity and disturbance of volatile organic constituents.*

b.) Initial Inspection

1. Remove the well cover and remove all standing water around the top of the well casing (manhole) before opening the well.
2. Inspect the exterior protective casing of the monitoring well for damage. Document the results of the inspection if there is a problem.
3. It is recommended that you place a protective covering around the well head. Replace the covering if it becomes soiled or ripped.

4. Inspect the well lock and determine whether the cap fits tightly. Replace the cap if necessary.

c.) Water Level Measurements - Use an electronic probe or chalked tape to determine the water level. Decontaminate all equipment before use. Measure the depth to groundwater from the top of the well casing to the nearest 0.01 foot. Always measure from the same reference point or survey mark on the well casing. Record the measurement.

1. *Electronic Probe*: Decontaminate all equipment before use. Follow the manufacturer's instructions for use. Record the measurement.
2. *Chalked Line Method*: Decontaminate all equipment before use. Lower chalked tape into the well until the lower end is in the water. This is usually determined by the sound of the weight hitting the water. Record the length of the tape relative to the reference point. Remove the tape and note the length of the wetted portion. Record the length. Determine the depth to water by subtracting the length of the wetted portion from the total length. Record the result.

d.) Water Column Determination - To determine the length of the water column, subtract the depth to the top of the water column from the total well depth (or gauged well depth if silting has occurred). The total well depth depends on the well construction. If gauged well depth is used due to silting, report total well depth also. Some wells may be drilled in areas of sinkhole, karst formations or rock leaving an open borehole. Attempt to find the total borehole depth in cases where there is an open borehole below the cased portion.

e.) Well Water Volume - Calculate the total volume of water, in gallons, in the well using the following equation:

$$V = (0.041)d \times d \times h$$

Where:

V = volume in gallons
d = well diameter in inches
h = height of the water column in feet

The total volume of water in the well may also be determined with the following equation by using a casing volume per foot factor (Gallons per Foot of Water) for the appropriate diameter well:

$$V = [\text{Gallons per Foot of Water}] \times h$$

Where:

V = volume in gallons
h = height of the water column in feet

Record all measurements and calculations in the field records.

f.) Purging Equipment Volume - Calculate the total volume of the pump, associated tubing and flow cell (if used), using the following equation:

$$V = p + ((0.041)d \times d \times l) + fc$$

Where:

V = volume in gallons
p = volume of pump in gallons
d = tubing diameter in inches
l = length of tubing in feet

fc = volume of flow cell in gallons

g.) If the groundwater elevation data are to be used to construct groundwater elevation contour maps, all water level measurements must be taken within the same 24 hour time interval when collecting samples from multiple wells on a site, unless a shorter time period is required. If the site is tidally influenced, complete the water level measurements within the time frame of an incoming or outgoing tide.

Well Purging Techniques

The selection of the purging technique and equipment is dependent on the hydrogeologic properties of the aquifer, especially depth to groundwater and hydraulic conductivity.

a.) Measuring the Purge Volume - The volume of water that is removed during purging must be recorded. Therefore, you must measure the volume during the purging operation.

1. Collect the water in a graduated container and multiply the number of times the container was emptied by the volume of the container, OR
2. Estimate the volume based on pumping rate. This technique may be used only if the pumping rate is constant. Determine the pumping rate by measuring the amount of water that is pumped for a fixed period of time, or use a flow meter.
    - Calculate the amount of water that is discharged per minute: D = Measured Amount/Total Time In Minutes
    - Calculate the time needed to purge one (1) well volume or one (1) purging equipment volume: Time = V/D
      Where: V = well volume or purging equipment volume
      D = discharge rate
    - Make new measurements each time the pumping rate is changed.
3. Use a totalizing flow meter.
    - Record the reading on the totalizer prior to purging.
    - Record the reading on the totalizer at the end of purging.
    - To obtain the volume purged, subtract the reading on the totalizer prior to purging from the reading on the totalizer at the end of purging.
    - Record the times that purging begins and ends in the field records.

b.) Purging Measurement Frequency - When purging a well that has the well screen fully submerged and the pump or intake tubing is placed within the well casing above the well screen or open hole, purge a minimum of one (1) well volume prior to collecting measurements of the field parameters. Allow at least one quarter (1/4) well volume to purge between subsequent measurements. When purging a well that has the pump or intake tubing placed within a fully submerged well screen or open hole, purge until the water level has stabilized (well recovery rate equals the purge rate), then purge a minimum of one (1) volume of the pump, associated tubing and flow cell (if used) prior to collecting measurements of the field parameters. Take measurements of the field parameters no sooner than two (2) to three (3) minutes apart. Purge at least

three (3) volumes of the pump, associated tubing and flow cell, if used, prior to collecting a sample. When purging a well that has a partially submerged well screen, purge a minimum of one (1) well volume prior to collecting measurements of the field parameters. Take measurements of the field parameters no sooner than two (2) to three (3) minutes apart.

c.) Purging Completion - Wells must be adequately purged prior to sample collection to ensure representation of the aquifer formation water, rather than stagnant well water. This may be achieved by purging three volumes from the well or by satisfying any one of the following three purge completion criteria:

1.) Three (3) consecutive measurements in which the three (3) parameters listed below are within the stated limits, dissolved oxygen is no greater than 20 percent of saturation at the field measured temperature, and turbidity is no greater than 20 Nephelometric Turbidity Units (NTUs).

- Temperature: + 0.2° C
- pH: + 0.2 Standard Units
- Specific Conductance: + 5.0% of reading

Document and report the following, as applicable. The last four items only need to be submitted once:

- Purging rate.
- Drawdown in the well, if any.
- A description of the process and the data used to design the well.
- The equipment and procedure used to install the well.
- The well development procedure.
- Pertinent lithologic or hydrogeologic information.

2.) If it is impossible to get dissolved oxygen at or below 20 percent of saturation at the field measured temperature or turbidity at or below 20 NTUs, then three (3) consecutive measurements of temperature, pH, specific conductance and the parameter(s) dissolved oxygen and/or turbidity that do not meet the requirements above must be within the limits below. The measurements are:

- Temperature: + 0.2° C
- pH: + 0.2 Standard Units
- Specific Conductance: + 5.0% of reading
- Dissolved Oxygen: + 0.2 mg/L or 10%, whichever is greater
- Turbidity: + 5 NTUs or 10%, whichever is greater

Additionally, document and report the following, as applicable, except that the last four(4) items only need to be submitted once:

- Purging rate.
- Drawdown in the well, if any.
- A description of conditions at the site that may cause the dissolved oxygen to be high and/or dissolved oxygen measurements made within the screened or open hole portion of the well with a downhole dissolved oxygen probe.

- A description of conditions at the site that may cause the turbidity to be high and any procedures that will be used to minimize turbidity in the future.
- A description of the process and the data used to design the well.
- The equipment and procedure used to install the well.
- The well development procedure.
- Pertinent lithologic or hydrogeologic information.

3.) If after five (5) well volumes, three (3) consecutive measurements of the field parameters temperature, pH, specific conductance, dissolved oxygen, and turbidity are not within the limits stated above, check the instrument condition and calibration, purging flow rate and all tubing connections to determine if they might be affecting the ability to achieve stable measurements. It is at the discretion of the consultant/contractor whether or not to collect a sample or to continue purging. Further, the report in which the data are submitted must include the following, as applicable. The last four (4) items only need to be submitted once.

- Purging rate.
- Drawdown in the well, if any.
- A description of conditions at the site that may cause the Dissolved Oxygen to be high and/or Dissolved Oxygen measurements made within the screened or open hole portion of the well with a downhole dissolved oxygen probe.
- A description of conditions at the site that may cause the turbidity to be high and any procedures that will be used to minimize turbidity in the future.
- A description of the process and the data used to design the well.
- The equipment and procedure used to install the well.
- The well development procedure.
- Pertinent lithologic or hydrogeologic information.

If wells have previously and consistently purged dry, and the current depth to groundwater indicates that the well will purge dry during the current sampling event, minimize the amount of water removed from the well by using the same pump to purge and collect the sample:

- Place the pump or tubing intake within the well screened interval.
- Use very small diameter Teflon, polyethylene or PP tubing and the smallest possible pump chamber volume. This will minimize the total volume of water pumped from the well and reduce drawdown.
- Select tubing that is thick enough to minimize oxygen transfer through the tubing walls while pumping.

- Pump at the lowest possible rate (100 mL/minute or less) to reduce drawdown to a minimum.
- Purge at least two (2) volumes of the pumping system (pump, tubing and flow cell, if used).
- Measure pH, specific conductance, temperature, dissolved oxygen and turbidity, then begin to collect the samples.

Collect samples immediately after purging is complete. The time period between completing the purge and sampling cannot exceed six hours. If sample collection does not occur within one hour of purging completion, re-measure the five field parameters: temperature, pH, specific conductance, dissolved oxygen and turbidity, just prior to collecting the sample. If the measured values are not within 10 percent of the previous measurements, re-purge the well. The exception is "dry" wells.

d.) Lanyards

1. Securely fasten lanyards, if used, to any downhole equipment (bailers, pumps, etc.).
2. Use bailer lanyards in such a way that they do not touch the ground surface.

Wells Without Plumbing

a.) Tubing/Pump Placement

1. If attempting to minimize the volume of purge water, position the intake hose or pump at the midpoint of the screened or open hole interval.
2. If monitoring well conditions do not allow minimizing of the purge water volume, position the pump or intake hose near the top of the water column. This will ensure that all stagnant water in the casing is removed.
3. If the well screen or borehole is partially submerged, and the pump will be used for both purging and sampling, position the pump midway between the measured water level and the bottom of the screen. Otherwise, position the pump or intake hose near the top of the water column.

b.) Non-dedicated (portable) pumps

1. *Variable Speed Peristaltic Pump*
    - Wear sampling gloves to position the decontaminated pump and tubing.
    - Attach a short section of tubing to the discharge side of the pump and into a graduated container.
    - Attach one end of a length of new or precleaned tubing to the pump head flexible hose.
    - Place the tubing as described in one of the options listed above.
    - Change gloves before beginning to purge.
    - Measure the depth to groundwater at frequent intervals.
    - Record these measurements.
    - Adjust the purging rate so that it is equivalent to the well recovery rate to minimize drawdown.

- If the purging rate exceeds the well recovery rate, reduce the pumping rate to balance the withdrawal rate with the recharge rate.
- If the water table continues to drop during pumping, lower the tubing at the approximate rate of drawdown so that water is removed from the top of the water column.
- Record the purging rate each time the rate changes.
- Measure the purge volume.
- Record this measurement.
- Decontaminate the pump and tubing between wells (see Appendix C) or if precleaned tubing is used for each well, only the pump.

2. *Variable Speed Centrifugal Pump*
    - Position fuel powered equipment downwind and at least 10 feet from the well head. Make sure that the exhaust faces downwind.
    - Wear sampling gloves to position the decontaminated pump and tubing.
    - Place the decontaminated suction hose so that water is always pumped from the top of the water column.
    - Change gloves before beginning to purge.
    - Equip the suction hose with a foot valve to prevent purge water from re-entering the well.
    - Measure the depth to groundwater at frequent intervals.
    - Record these measurements.
    - To minimize drawdown, adjust the purging rate so that it is equivalent to the well recovery rate.
    - If the purging rate exceeds the well recovery rate, reduce the pumping rate to balance the withdrawal rate with the recharge rate.
    - If the water table continues to drop during pumping, lower the tubing at the approximate rate of drawdown so that the water is removed from the top of the water column.
    - Record the purging rate each time the rate changes.
    - Measure the purge volume.
    - Record this measurement.
    - Decontaminate the pump and tubing between wells or if precleaned tubing is used for each well, only the pump.
3. *Variable Speed Electric Submersible Pump*
    - Position fuel powered equipment downwind and at least 10 feet from the well head. Make sure that the exhaust faces downwind.
    - Wear sampling gloves to position the decontaminated pump and tubing.
    - Carefully position the decontaminated pump.

- Change gloves before beginning to purge.
- Measure the depth to groundwater at frequent intervals.
- Record these measurements.
- To minimize drawdown, adjust the purging rate so that it is equivalent to the well recovery rate.
- If the purging rate exceeds the well recovery rate, reduce the pumping rate to balance the withdrawal rate with the recharge rate.
- If the water table continues to drop during pumping, lower the tubing or pump at the approximate rate of drawdown so that water is removed from the top of the water column.
- Record the purging rate each time the rate changes.
- Measure the purge volume.
- Record this measurement.
- Decontaminate the pump and tubing between wells or only the pump if precleaned tubing is used for each well.

4. *Variable Speed Bladder Pump*
    - Position fuel powered equipment downwind and at least 10 feet from the well head. Make sure that the exhaust faces downwind.
    - Wear sampling gloves to position the decontaminated pump and tubing.
    - Attach the tubing and carefully position the pump.
    - Change gloves before beginning purging.
    - Measure the depth to groundwater at frequent intervals.
    - Record these measurements.
    - To minimize drawdown, adjust the purging rate so that it is equivalent to the well recovery rate.
    - If the purging rate exceeds the well recovery rate, reduce the pumping rate to balance the withdrawal rate with the recharge rate.
    - If the water table continues to drop during pumping, lower the tubing or pump at the approximate rate of drawdown so that water is removed from the top of the water column.
    - Record the purging rate each time the rate changes.
    - Measure the purge volume.
    - Record this measurement.
    - Decontaminate the pump and tubing between wells or if precleaned tubing is used for each well, only the pump.

c.) <u>Dedicated Portable Pumps</u>

1. *Variable Speed Electric Submersible Pump*
    - Position fuel powered equipment downwind and at least 10 feet from the well head. Make sure that the exhaust faces downwind.
    - Wear sampling gloves.

- Measure the depth to groundwater at frequent intervals.
- Record these measurements.
- Adjust the purging rate so that it is equivalent to the well recovery rate to minimize drawdown.
- If the purging rate exceeds the well recovery rate, reduce the pumping rate to balance the withdraw with the recharge rate.
- Record the purging rate each time the rate changes.
- Measure the purge volume.
- Record this measurement.

2. *Variable Speed Bladder Pump*
    - Position fuel powered equipment downwind and at least 10 feet from the well head. Make sure that the exhaust faces downwind.
    - Wear sampling gloves.
    - Measure the depth to groundwater at frequent intervals.
    - Record these measurements.
    - Adjust the purging rate so that it is equivalent to the well recovery rate to minimize drawdown.
    - If the purging rate exceeds the well recovery rate, reduce the pumping rate to balance the withdraw with the recharge rate.
    - Record the purging rate each time the rate changes.
    - Measure the purge volume.
    - Record this measurement.
3. *Bailers* - Using bailers for purging is not recommended unless care is taken to use proper bailing technique, or if free product is present in the well or suspected to be in the well.
    - Minimize handling the bailer as much as possible.
    - Wear sampling gloves.
    - Remove the bailer from its protective wrapping just before use.
    - Attach a lanyard of appropriate material.
    - Use the lanyard to move and position the bailer.
    - Lower and retrieve the bailer slowly and smoothly.
    - Lower the bailer carefully into the well to a depth approximately a foot above the water column.
    - When the bailer is in position, lower the bailer into the water column at a rate of 2 cm/sec until the desired depth is reached.
    - Do not lower the top of the bailer more than one (1) foot below the top of the water table so that water is removed from the top of the water column.
    - Allow time for the bailer to fill with aquifer water as it descends into the water column.

- Carefully raise the bailer. Retrieve the bailer at the same rate of 2 cm/sec until the bottom of the bailer has cleared to top of the water column.
- Measure the purge volume.
- Record the volume of the bailer.
- Continue to carefully lower and retrieve the bailer as described above until the purging is considered complete, based on either the removal of 3 well volumes.
- Remove at least one (1) well volume before collecting measurements of the field parameters. Take each subsequent set of measurements after removing at least one quarter (1/4) well volume between measurements.

Groundwater Sampling Techniques

a.) Purge wells.

b.) Replace protective covering around the well if it is soiled or torn after completing purging operations.

c.) Equipment Considerations

1. The following pumps are approved to collect volatile organic samples:
    - Stainless steel and Teflon variable speed submersible pumps
    - Stainless steel and Teflon or polyethylene variable speed bladder pumps
    - Permanently installed PVC bodied pumps (As long as the pump remains in contact with the water in the well at all times)
2. Collect sample from the sampling device and store in sample container. Do not use intermediate containers.
3. To avoid contamination or loss of analytes from the sample, handle sampling equipment as little as possible and minimize equipment exposure to the sample.
4. To reduce chances of cross-contamination, use dedicated equipment whenever possible. "Dedicated" is defined as equipment that is to be used solely for one location for the life of that equipment (e.g., permanently mounted pump). Purchase dedicated equipment with the most sensitive analyte of interest in mind.
    - Clean or make sure dedicated pumps are clean before installation. They do not need to be cleaned prior to each use, but must be cleaned if they are withdrawn for repair or servicing.
    - Clean or make sure any permanently mounted tubing is clean before installation.
    - Change or clean tubing when the pump is withdrawn for servicing.
    - Clean any replaceable or temporary parts.

- Collect equipment blanks on dedicated pumping systems when the tubing is cleaned or replaced.
- Clean or make sure dedicated bailers are clean before placing them into the well.
- Collect an equipment blank on dedicated bailers before introducing them into the water column.
- Suspend dedicated bailers above the water column if they are stored in the well.

Sampling Wells Without Plumbing

a.) Sampling with Pumps – The following pumps may be used to sample for organics:

- Peristaltic pumps
- Stainless steel, Teflon or polyethylene bladder pumps
- Variable speed stainless steel and Tefloṇ submersible pumps

1. *Peristaltic Pump*

- Volatile Organics: One of three methods may be used.
  - Remove the drop tubing from the inlet side of the pump; submerge the drop tubing into the water column; prevent the water in the tubing from flowing back into the well; remove the drop tubing from the well; carefully allow the groundwater to drain into the sample vials; avoid turbulence; do not aerate the sample; repeat steps until enough vials are filled. OR
  - Use the pump to fill the drop tubing; quickly remove the tubing from the pump; prevent the water in the tubing from flowing back into the well; remove the drop tubing from the well; carefully allow the groundwater to drain into the sample vials; avoid turbulence; do not aerate the sample; repeat steps until enough vials are filled. OR
  - Use the pump to fill the drop tubing; withdraw the tubing from the well; reverse the flow on the peristaltic pumps to deliver the sample into the vials at a slow, steady rate; repeat steps until enough vials are filled.
- Extractable Organics: If delivery tubing is not polyethylene or PP, or is not Teflon lined, use pump and vacuum trap method. Connect the outflow tubing from the container to the influent side of the peristaltic pump. Turn pump on and reduce flow until smooth and even. Discard a

small portion of the sample to allow for air space. Preserve (if required), label, and complete field notes.

- Inorganic samples: These samples may be collected from the effluent tubing. If samples are collected from the pump, decontaminate all tubing (including the tubing in the head) or change it between wells. Preserve (if required), label, and complete field notes.

2. *Variable Speed Bladder Pump*
    - If sampling for organics, the pump body must be constructed of stainless steel and the valves and bladder must be Teflon. All tubing must be Teflon, polyethylene, or PP and any cabling must be sealed in Teflon, polyethylene or PP, or made of stainless steel.
    - After purging to a smooth even flow, reduce the flow rate.
    - When sampling for volatile organic compounds, reduce the flow rate to 100-200mL/minute, if possible.
3. *Variable Speed Submersible Pump*
    - The housing must be stainless steel.
    - If sampling for organics, the internal impellers, seals and gaskets must be constructed of stainless steel, Teflon, polyethylene or PP. The delivery tubing must be Teflon, polyethylene or PP; the electrical cord must be sealed in Teflon; any cabling must be sealed in Teflon or constructed of stainless steel.
    - After purging to a smooth even flow, reduce the flow rate.
    - When sampling for volatile organic compounds, reduce the flow rate to 100-200mL/minute, if possible.

b.) Sampling with Bailers - A high degree of skill and coordination are necessary to collect representative samples with a bailer.

1. *General Considerations*
    - Minimize handling of bailer as much as possible.
    - Wear sampling gloves.
    - Remove bailer from protective wrapping just before use.
    - Attach a lanyard of appropriate material.
    - Use the lanyard to move and position the bailers.
    - Do not allow bailer or lanyard to touch the ground.
    - If bailer is certified precleaned, no rinsing is necessary.
    - If both a pump and a bailer are to be used to collect samples, rinse the exterior and interior of the bailer with sample water from the pump before removing the pump.
    - If the purge pump is not appropriate for collecting samples (e.g., non-inert components), rinse the bailer by collecting a single bailer of the groundwater to be sampled.
    - Discard the water appropriately.

- Do not rinse the bailer if Oil and Grease samples are to be collected.

2. *Bailing Technique*
    - Collect all samples that are required to be collected with a pump before collecting samples with the bailer.
    - Raise and lower the bailer gently to minimize stirring up particulate matter in the well and the water column, which can increase sample turbidity.
    - Lower the bailer carefully into the well to a depth approximately a foot above the water column. When the bailer is in position, lower the bailer into the water column at a rate of 2 cm/sec until the desired depth is reached.
    - Do not lower the top of the bailer more than one foot below the top of the water table, so that water is removed from the top of the water column.
    - Allow time for the bailer to fill with aquifer water as it descends into the water column.
    - Do not allow the bailer to touch the bottom of the well or particulate matter will be incorporated into the sample. Carefully raise the bailer. Retrieve the bailer at the same rate of 2 cm/sec until the bottom of the bailer has cleared to top of the water column.
    - Lower the bailer to approximately the same depth each time.
    - Collect the sample. Install a device to control the flow from the bottom of the bailer and discard the first few inches of water. Fill the appropriate sample containers by allowing the sample to slowly flow down the side of the container. Discard the last few inches of water in the bailer.
    - Repeat steps for additional samples.
    - As a final step measure the DO, pH, temperature, turbidity and specific conductance after the final sample has been collected. Record all measurements and note the time that sampling was completed.

c.) <u>Sampling Low Permeability Aquifers or Wells that have Purged Dry</u>

1. Collect the sample(s) after the well has been purged. Minimize the amount of water removed from the well by using the same pump to purge and collect the sample. If the well has purged dry, collect samples as soon as sufficient sample water is available.
2. Measure the five field parameters temperature, pH, specific conductance, dissolved oxygen and turbidity at the time of sample collection.
3. Advise the analytical laboratory and the client that the usual amount of sample for analysis may not be available.

Appendix D - Collecting Samples from Wells with Plumbing in Place

In-place plumbing is generally considered permanent equipment routinely used for purposes other than purging and sampling, such as for water supply.

a.) Air Strippers or Remedial Systems - These types of systems are installed as remediation devices. Collect influent and effluent samples from air stripping units as described below.

1. Remove any tubing from the sampling port and flush for one to two minutes.
2. Remove all hoses, aerators and filters (if possible).
3. Open the spigot and purge sufficient volume to flush the spigot and lines and until the purging completion criteria have been met.
4. Reduce the flow rate to approximately 500 mL/minute (a 1/8" stream) or approximately 0.1 gal/minute before collecting samples.
5. Follow procedures for collecting samples from water supply wells as outlined below.

b.) Water Supply Wells – Water supply wells with in-place plumbing do not require equipment to be brought to the well to purge and sample. Water supply wells at UST facilities must be sampled for volatile organic compounds (VOCs) and semivolatile compounds (SVOCs).

1. *Procedures for Sampling Water Supply Wells*
   - Label sample containers prior to sample collection.
   - Prepare the storage and transport containers (ice chest, etc.) before taking any samples so each collected sample can be placed in a chilled environment immediately after collection.
   - You must choose the tap closest to the well, preferably at the wellhead. The tap must be before any holding or pressurization tank, water softener, ion exchange, disinfection process or before the water line enters the residence, office or building. If no tap fits the above conditions, a new tap that does must be installed.
   - The well pump must not be lubricated with oil, as that may contaminate the samples.
   - The sampling tap must be protected from exterior contamination associated with being too close to a sink bottom or to the ground. If the tap is too close to the ground for direct collection into the appropriate container, it is acceptable to use a smaller (clean) container to transfer the sample to a larger container.
   - Leaking taps that allow water to discharge from around the valve stem handle and down the outside of the faucet, or taps in which water tends to run up on the outside of the lip, are to be avoided as sampling locations.

- Disconnect any hoses, filters, or aerators attached to the tap before sampling.
- Do not sample from a tap close to a gas pump. The gas fumes could contaminate the sample.

2. *Collecting Volatile Organic Samples*
    - Equipment Needed: VOC sample vials [40 milliliters, glass, may contain 3 to 4 drops of hydrochloric acid (HCl) as preservative]; Disposable gloves and protective goggles; Ice chest/cooler; Ice; Packing materials (sealable plastic bags, bubble wrap, etc.); and Lab forms.
    - Sampling Procedure: Run water from the well for at least 15 minutes. If the well is deep, run water longer (purging three well volumes is best). If tap or spigot is located directly before a holding tank, open a tap after the holding tank to prevent any backflow into the tap where you will take your sample. This will ensure that the water you collect is "fresh" from the well and not from the holding tank. After running the water for at least 15 minutes, reduce the flow of water. The flow should be reduced to a trickle but not so slow that it begins to drip. A smooth flow of water will make collection easier and more accurate. Remove the cap of a VOC vial and hold the vial under the stream of water to fill it. Be careful not to spill any acid that is in the vial. For best results use a low flow of water and angle the vial slightly so that the water runs down the inside of the vial. This will help keep the sample from being agitated, aerated or splashed out of the vial. It will also increase the accuracy of the sample. As the vial fills and is almost full, turn the vial until it is straight up and down so the water won't spill out. Fill the vial until the water is just about to spill over the lip of the vial. The surface of the water sample should become mounded. It is a good idea not to overfill the vial, especially if an acid preservative is present in the vial. Carefully replace and screw the cap onto the vial. Some water may overflow as the cap is put on. After the cap is secure, turn the vial upside down and gently tap the vial to see if any bubbles are present. If bubbles are present in the vial, remove the cap, add more water and check again to see if bubbles are present. Repeat as necessary. After two samples without bubbles have been collected, the samples should be labeled and prepared for shipment. Store samples at 4° C.

3. *Collecting Extractable Organic and/or Metals Samples*

- Equipment Needed: SVOC sample bottle [1 liter, amber glass] and/or Metals sample bottle [0.5 liter, polyethylene or glass, 5 milliliters of nitric acid (HNO3) preservative]; Disposable gloves and protective goggles; Ice Chest/Cooler; Ice; Packing materials (sealable plastic bags, bubble wrap, etc.); and Lab forms.
- Sampling Procedure: Run water from the well for at least 15 minutes. If the well is deep, run the water longer (purging three well volumes is best). If tap or spigot is located directly before a holding tank, open a tap after the holding tank to prevent any backflow into the tap where you will take your sample. This will ensure that the water you collect is "fresh" from the well and not from the holding tank. After running the water for at least 15 minutes, reduce the flow. Low water flow makes collection easier and more accurate. Remove the cap of a SVOC or metals bottle and hold it under the stream of water to fill it. The bottle does not have to be completely filled (i.e., you can leave an inch or so of headspace in the bottle). After filling, screw on the cap, label the bottle and prepare for shipment. Store samples at 4° C.

Appendix E - Collecting Surface Water Samples

The following topics include 1.) acceptable equipment selection and equipment construction materials and 2.) standard grab, depth-specific and depth-composited surface water sampling techniques.

Facilities which contain or border small rivers, streams or branches should include surface water sampling as part of the monitoring program for each sampling event. A simple procedure for selecting surface water monitoring sites is to locate a point on a stream where drainage leaves the site. This provides detection of contamination through, and possibly downstream of, site via discharge of surface waters. The sampling points selected should be downstream from any waste areas. An upstream sample should be obtained in order to determine water quality upstream of the influence of the site.

a.) General Cautions
    1. When using watercraft take samples near the bow away and upwind from any gasoline outboard engine. Orient watercraft so that bow is positioned in the upstream direction.
    2. When wading, collect samples upstream from the body. Avoid disturbing sediments in the immediate area of sample collection.
    3. Collect water samples prior to taking sediment samples when obtaining both from the same area (site).
    4. Unless dictated by permit, program or order, sampling at or near man-made structures (e.g., dams, weirs or bridges) may not provide representative data because of unnatural flow patterns.
    5. Collect surface water samples from downstream towards upstream.

b.) Equipment and Supplies - Select equipment based on the analytes of interest, specific use, and availability.

c.) Surface Water Sampling Techniques - Adhere to all general protocols applicable to aqueous sampling when following the surface water sampling procedures addressed below.
    1. *Manual Sampling*: Use manual sampling for collecting grab samples for immediate in-situ field analyses. Use manual sampling in lieu of automatic equipment over extended periods of time for composite sampling, especially when it is necessary to observe and/or note unusual conditions.
        - Surface Grab Samples - Do not use sample containers containing premeasured amounts of preservatives to collect grab samples. If the sample matrix is homogeneous, then the grab method is a simple and effective technique for collection purposes. If homogeneity is not apparent, based on flow or vertical variations (and should never be assumed), then use other collection protocols. Where practical, use the actual sample container submitted to the laboratory for collecting samples to be analyzed for oil and grease, volatile organic compounds (VOCs), and microbiological samples. This procedure eliminates the possibility of contaminating the sample with an intermediate collection container. The use of

unpreserved sample containers as direct grab samplers is encouraged since the same container can be submitted for laboratory analysis after appropriate preservation. This procedure reduces sample handling and eliminates potential contamination from other sources (e.g., additional sampling equipment, environment, etc.).

1. Grab directly into sample container.
2. Slowly submerge the container, opening neck first, into the water.
3. Invert the bottle so the neck is upright and pointing towards the direction of water flow (if applicable). Allow water to run slowly into the container until filled.
4. Return the filled container quickly to the surface.
5. Pour out a few mL of sample away from and downstream of the sampling location. This procedure allows for the addition of preservatives and sample expansion. Do not use this step for volatile organics or other analytes where headspace is not allowed in the sample container.
6. Add preservatives, securely cap container, label, and complete field notes. If sample containers are attached to a pole via a clamp, submerge the container and follow steps 3 – 5 but omit steps 1 and 2.

- Sampling with an Intermediate Vessel or Container: If the sample cannot be collected directly into the sample container to be submitted to the laboratory, or if the laboratory provides prepreserved sample containers, use an unpreserved sample container or an intermediate vessel (e.g., beakers, buckets or dippers) to obtain the sample. These vessels must be constructed appropriately, including any poles or extension arms used to access the sample location.
    1. Rinse the intermediate vessel with ample amounts of site water prior to collecting the first sample.
    2. Collect the sample as outlined above using the intermediate vessel.
    3. Use pole mounted containers of appropriate construction to sample at distances away from shore, boat, etc. Follow the protocols above to collect samples.
- Peristaltic Pump and Tubing: The most portable pump for this technique is a 12 volt peristaltic pump. Use appropriately precleaned, silastic tubing in the pump head and attach polyethylene, Tygon, etc. tubing to the pump. This technique is not acceptable for Oil and Grease, EPH, VPH or VOCs. Extractable organics can be collected through the pump if flexible interior-wall Teflon, polyethylene or PP tubing is used in the pump head or if used with the organic trap setup.

1. Lower appropriately precleaned tubing to a depth of 6 – 12 inches below water surface, where possible.
2. Pump 3 – 5 tube volumes through the system to acclimate the tubing before collecting the first sample.
3. Fill individual sample bottles via the discharge tubing. Be careful not to remove the inlet tubing from the water.
4. Add preservatives, securely cap container, label, and complete field notes.

- Mid-Depth Grab Samples: Mid-depth samples or samples taken at a specific depth can approximate the conditions throughout the entire water column. The equipment that may be used for this type of sampling consists of the following depth-specific sampling devices: Kemmerer, Niskin, Van Dorn type, etc. You may also use pumps with tubing or double check-valve bailers. Certain construction material details may preclude its use for certain analytes. Many Kemmerer samplers are constructed of plastic and rubber that preclude their use for all volatile and extractable organic sampling. Some newer devices are constructed of stainless steel or are all Teflon or Teflon-coated. These are acceptable for all analyte groups without restriction.
    1. Measure the water column to determine maximum depth and sampling depth prior to lowering the sampling device.
    2. Mark the line attached to the sampler with depth increments so that the sampling depth can be accurately recorded.
    3. Lower the sampler slowly to the appropriate sampling depth, taking care not to disturb the sediments.
    4. At the desired depth, send the messenger weight down to trip the closure mechanism.
    5. Retrieve the sampler slowly.
    6. Rinse the sampling device with ample amounts of site water prior to collecting the first sample. Discard rinsate away from and downstream of the sampling location.
    7. Fill the individual sample bottles via the discharge tube.
- Double Check-Valve Bailers: Collect samples using double check-valve bailers if the data requirements do not necessitate a sample from a strictly discrete interval of the water column. Bailers with an upper and lower check-valve can be lowered through the water column. Water will continually be displaced through the bailer until the desired depth is reached, at which point the bailer is retrieved. Sampling with this type of bailer must follow the same protocols outlined above, except that a messenger weight is not applicable. Although not designed specifically for this kind of sampling, a bailer is acceptable when a mid-depth sample is required

1. As the bailer is dropped through the water column, water is displaced through the body of the bailer. The degree of displacement depends upon the check-valve ball movement to allow water to flow freely through the bailer body.
2. Slowly lower the bailer to the appropriate depth. Upon retrieval, the two check valves seat, preventing water from escaping or entering the bailer.
3. Rinse the sampling device with ample amounts of site water prior to collecting the first sample.
4. Fill the individual sample bottles via the discharge tube. Sample bottles must be handled as described above.

- Peristaltic Pump and Tubing: The most portable pump for this technique is a 12 volt peristaltic pump. Use appropriately precleaned, silastic tubing in the pump head and attach HDPE, Tygon, etc. tubing to the pump. This technique is not acceptable for Oil and Grease, EPH, VPH or VOCs. Extractable organics can be collected through the pump if flexible interior-wall Teflon, polyethylene or PP tubing is used in the pump head, or if used with an organic trap setup.
    1. Measure the water column to determine the maximum depth and the sampling depth.
    2. Tubing will need to be tied to a stiff pole or be weighted down so the tubing placement will be secure. Do not use a lead weight. Any dense, non-contaminating, non-interfering material will work (brick, stainless steel weight, etc.). Tie the weight with a lanyard (braided or monofilament nylon, etc.) so that it is located below the inlet of the tubing.
    3. Turn the pump on and allow several tubing volumes of water to be discharged before collecting the first sample.
    4. Fill the individual sample bottles via the discharge tube. Sample bottles must be handled as described above.

Appendix B
Gas Stripping Cell Instructions
(Intended to be most recent version)

Dissolved Gas Sampling

Technical Guidance from Microseeps

Microseeps septa are impermeable to diffusion

Taking samples of groundwater for dissolved gas analysis requires special equipment and techniques which are available from and have been developed by Microseeps.

Before any dissolved gas sample is taken, the well must be micropurged. This procedure calls for the use of a flow thru cell equipped with four probes which measure DO, temperature, conductivity and ORP. When these parameters have stabilized (+/- 10%) for a period of 10 minutes, the well is ready for sampling.

Water samples may then be collected directly into supplied 40 ml VOA's or bubble strip sampling may be used to collect samples for dissolved hydrogen. If the bubble strip procedure is used, both permanent gases and light hydrocarbons may be determined from the same sample that is used for dissolved hydrogen.

If the sample is taken for the purpose of dissolved hydrogen analysis, the well should have been in place for at least 90 days and should not have a black iron screen. PVC screens are preferable. Stainless steel screens, particularly those that have been in place for long periods of time, are usually acceptable.

The analysis of the light hydrocarbon suite and the permanent gas suite may also be made from a water sample collected in a 40 ml VOA vial. These light gases, however, easily diffuse through the standard septa which are used for VOA samples.

A particularly egregious example is the diffusion of oxygen from the atmosphere into VOA vials equipped with standard teflon lined silicone septa. Microseeps has found that the rate of this diffusion is such that the sampled groundwater in such a VOA increases approximately 1mg/l dissolved oxygen per day following sampling. This means that a substantially anaerobic water sample becomes saturated with dissolved oxygen over the course of the 14 day holding time normally associated with analysis of these samples.

Microseeps septa are impermeable to the diffusion into the sample of dissolved oxygen and the diffusion out of the sample of the dissolved light hydrocarbons and carbon dioxide. Microseeps provides such septa with VOA vials to prevent diffusion from affecting the data derived from these samples.

Microseeps "Bubble Strip" Sampler

There is no known preservation technique to halt microbial degradation of dissolved hydrogen in a water sample. Microseeps developed a bubble strip sampler to overcome this problem and allow field personnel to sample for hydrogen in as little as twenty minutes while maintaining the integrity of the sample.

If the bubble stripping procedure is used for dissolved hydrogen, both the permanent gas suite and the light hydrocarbon suite partition into the bubble and may be determined from the same sample from which the dissolved hydrogen is determined.

It is always desirable to minimize the number of samples from which individual analyses are made to reduce the potential for sampling bias between samples.

Microseeps' bubble strip sampler has been evaluated by USEPA.

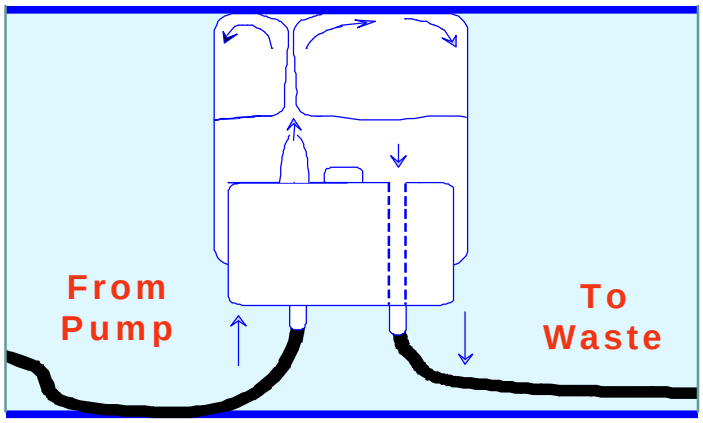

220 William Pitt Way Pittsburgh, PA 15238
www.microseeps.com
(800) 659-2887

Gas Stripping Cell Instructions

Technical Guidance from Microseeps

Sampling Questions?

Call
800-659-2887
Mon. - Fri.
9 -5 EST

Installation and Operation

To place the gas stripping cell into service:

1. Remove one of the cell assemblies from the packing carton. Refer to Figure 1 (following pages) to become familiar with the parts of the cell.

2. Connect the inlet tube of the cell to the outlet of your pump. The inlet tube is designed to connect to ¼ inch O.D. hard tubing. Secure the connection (nylon wire ties are recommended).

3. Insert the drain tube of the cell into a waste container, keeping the end of the tube at the bottom of the container. Any waste container of suitable size may be used. A 2-liter soda pop bottle may be placed in the waste container to determine pumping flow rate.

4. Secure the cell assembly so that the housing cover is above the glass housing (*i.e.* upright). A ring stand and clamp are recommended for this purpose.

5. Turn the pump on and check for leaks. If any leaks are found seal them before proceeding. Measure, in ml per minute, the flow rate of the pump. If a 2-liter soda pop bottle was used, the flow rate can be determined by measuring how many minutes it takes to fill the bottle, then substituting the measured time into the following equation.

Flow = 2000 ml/time to fill in minutes

Consult table to determine the equilibrium time needed to gas strip at this flow rate.

Flow rate (ml/min)	Sampling time (min)
100-120	30
130-150	25
160-200	20
210-300	15
>300	10

NOTE: Use a flow rate between 100 ml/min and 350 ml/min. Do not turn off the pump.

6. Unclamp the cell assembly, invert it and re-secure the assembly in the inverted position. Make sure the drain tube is still in the waste container and the end of the drain tube is near the bottom of the bottle.

7. Connect the (supplied) stopcock to the syringe and the (supplied) needle to the stopcock. Place the stopcock in the open position (*i.e.* so that the stopcock handle is in-line with the syringe). Draw the plunger back on the syringe to the 20.0-mL mark. Keeping the cell in the inverted position, insert the needle into the needle guide. Pierce the septum and inject the air into the cell. Then remove the needle and syringe from the assembly and carefully cover the needle. Do not discard the syringe apparatus.

8. Start timing and let the ground water pump through the cell for the time specified in Table 1 for your particular pumping speed. Meanwhile, be sure that the sample vial is properly labeled and that the flow rate and any other relevant field data are recorded in the field log.

   NOTE: Be sure to keep the end of the drain tube at the bottom of the waste container. This will insure that outside air is not drawn into the cell. Failure to do this will invalidate the sample.

9. When the equilibration time is up, turn off the pump, unclamp the cell and re-clamp it in its upright position. Verify that the plunger of the syringe is pushed all the way in and that the stopcock is in the open position, then insert the needle into the needle guide and pierce the septum. Withdraw 1-mL of gas by pulling back on the syringe plunger while holding the syringe body in place, remove the syringe from the cell and expel the sample. Immediately re-insert the needle into the needle guide and pierce the septum. Withdraw a 15-mL sample of gas and, with the needle still through the septum, close the stopcock. Rapidly withdraw the needle from the septum and place it through septum on the sample vial (see Figure 2, next page). Open the stopcock and completely depress the syringe barrel. With the syringe barrel completely depressed, separate the sample vial and the syringe with a quick pull. Discard the syringe apparatus according to Local, State and Federal regulations.

Gas Stripping Cell Instructions

Technical Guidance from Microseeps

Sampling Questions?

Call 800-659-2887 Mon. - Fri. 9 -5 EST

Decontamination/Cleaning

Pump at least 1 liter of potable water through the cell. The cell assembly is now ready for re-use.

The only expendable part of the cell is the sampling septum (part 7). Normally, each septum may be used for the collection of 5-10 samples. If bubbles are seen rising up from the septum when the cell is inverted the septum MUST be replaced.

Figure 1.
Cross section of Microseeps Gas Stripping Cell

1. Housing Cover
2. Jet Spray Nozzle
3. Nylon Tie
4. Inlet Tube
5. Needle Guide Port
6. Drain Tube
7. Replaceable Septum
8. Glass Housing

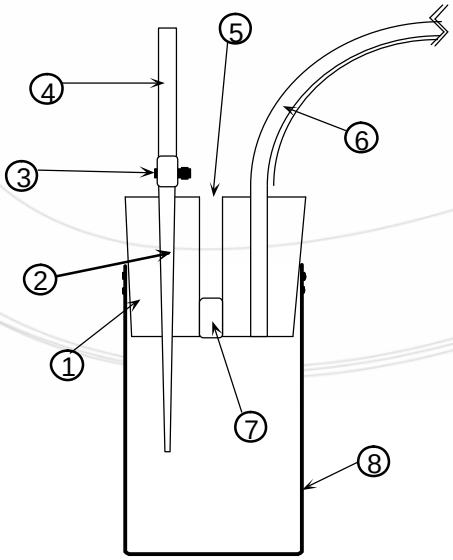

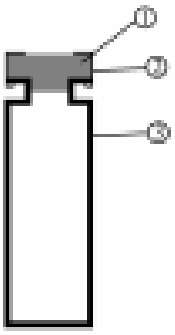

Figure 2.
Cross section of septum bottle

1. Septum
2. Metal Closure
3. Glass vial

Replacing the Sampling Port Septum

All part numbers refer to Figure 1.

1. Remove the housing cover (part 1) from the glass housing (part 8).

2. Use a handy, blunt tipped object to push the replaceable septum (part 7) out of the housing cover. The cover to a needle works well for this purpose, but be sure that the needle is NOT in the cover. Discard the old septum.

3. Take a new septum and wet both the new septum and the housing cover with potable water.

4. Carefully using the same blunt instrument used in step three above, slide the new septum into the hole from which the old septum was removed. The bottom of the new septum must be flush with the narrow end of the housing cover.

5. If the housing cover is not still wet, wet it again with potable water. Place the bottom end of the housing cover into the glass housing and push it in until less than 3/8" are above the rim of the glass housing. This may require some force.

6. Follow the cleaning procedures described above to prepare the cell for a return to service.