Permit No.	Scan Date	DIN
8505-INDUS-	August 3, 2012	16987

RECEIVED
July 24, 2012
Solid Waste Section
Asheville Regional Office

Prepared for:
DUKE ENERGY

Belews Creek Steam Station
3195 Pine Hall Rd.
Belews Creek, NC 27009

APPROVED DOCUMENT
Division of Waste Management
Solid Waste Section
Date October 22, 2012 By LY Frost

BELEWS CREEK STEAM STATION

FGD RESIDUE LANDFILL

OPERATIONS PLAN

May 23, 2012

Prepared by:

2211 West Meadowview Road, Suite 101
Greensboro, NC 27407
NC CORP LIC: C-0782
JEI Project: 845.1202.11 Task 01

OPERATIONS PLAN

Duke Energy Carolinas, LLC—Belews Creek Steam Station
Flue Gas Desulfurization (FGD) Residue Landfill Phase 1
Stokes County, North Carolina

Permit No. 8505

May 23, 2012

Prepared for:
Duke Energy Carolinas, LLC
526 South Church Street
Charlotte, North Carolina 28202

Prepared by:
Joyce Engineering, Inc.
2211 W. Meadowview Road, Suite 101
Greensboro, NC 27407

Martin "Mark" A. Shumpert, P.E.
Joyce Engineering, Inc.
North Carolina Corporate Lic: C-0782

Description of Revisions

The following table provides a brief description of the revisions to the Operations Plan. The Operations Plan was originally submitted to the North Carolina Department of Environment and Natural Resources (DENR) on September 30, 2005. Comments from DENR on the subsequent modification submittals were provided in letters from Mr. Larry Frost, DENR, to Mr. Ed Sullivan, P.E., Duke Energy Carolinas, LLC, and can be found in Appendix E.

Revision	***Date of Document***	***Description of Revisions***
Initial Issue	January 24, 2008	Initial issuance of document.
Revision 1	August 5, 2011	Landfill Operations Plan Section 3.0 Dust Control Plan • Added dust control plan and two figures Section 4.0 Chimney Drain System • Added chimney drain system design and description and appendices
Revision 2	March 23, 2012	FGD landfill leachate system modification allowing penetrations to remain

Table of Contents

1.0 General Facility Operations 1
1.1 Overview 1
1.2 Contact Information 1
1.3 Safety 1
1.4 Access and Security Requirements 1
1.5 Operating Hours 2
1.6 Signs 2
1.7 Training 2
1.8 Record Keeping 2
1.9 Design Drawings 3
2.0 Operations Management 3
2.1 Waste Handling and Landfill Sequencing 3
2.1.1 Landfill Capacity 3
2.1.2 Waste Acceptance, Disposal, and Screening Requirements 4
2.1.3 Dust, Litter, Odor, and Vector Control 5
2.1.4 Fire Control 5
2.1.5 Landfill Sequencing 5
2.1.6 Waste Placement 5
2.1.7 Compaction Requirements 6
2.1.8 Cover Requirements 6
2.1.8.1 Operational Cover 6
2.1.8.2 Interim Cover 6
2.1.8.3 Final Cover 7
2.2 Leachate and Contact Stormwater Management 7
2.3 Leachate Collection System (LCS) 7
2.3.1 LCS Maintenance 7
2.3.2 LCS Record Keeping and Sampling 8
2.3.3 Contingency Plan 8
2.4 Stormwater Collection and Conveyance 8
2.4.1 Stormwater Discharge 8
2.5 Contact and Non-Contact Water Basin Maintenance Requirements 9
2.6 Groundwater Monitoring Well Access Requirements 9

2.7 Landfill Gas Management 9
3.0 Erosion and Sedimentation Control 9
3.1 E&SC Measures Monitoring and Maintenance 9
3.2 Surface Erosion Monitoring 10
4.0 Vegetation Management 10
4.1 Temporary Seeding 11
4.2 Permanent Seeding 12
5.0 Landfill Closure 13
6.0 Required Regulatory Submittals 13

Tables

1. List of Construction Drawings

Appendices

Appendix I Dust Control Plan
Appendix II Phasing Drawings (developed and provided by WSP Sells, dated August 2, 2006)
Appendix III Closure/Post-Closure Plan
Appendix IV Chimney Drain System
Appendix V Leachate Storage Basin Leak Detection System
Appendix VI NCDENR Communications

- Letter from Mr. Larry Frost, DENR to Mr. Ed Sullivan, P.E., Duke Energy Carolinas, LLC, dated July 1, 2011, Permit to Operate, Modification, Changes to the Approved Plans, Completeness Determination and Technical Review, Belews Creek Steam Station Flue Gas Desulfurization (FGD) Residue Landfill, Permit # 8505, Stokes County, DIN 14257
- Letter from Mr. Larry Frost, DENR to Mr. Ed Sullivan, P.E., Duke Energy Carolinas, LLC, dated March 26, 2012, Drawing OP-5, Cell Operation – Leachate Collection and Removal System – Revision Approval, Duke Energy of the Carolinas, Belews Creek Steam Station, FGD Residue Landfill, Stokes County, Permit # 8505, DIN 16354

1.0 General Facility Operations

1.1 Overview

The purpose of this Operations Plan is to provide a plan for the safe and efficient operations of the Belews Creek Steam Station (BCSS) Flue Gas Desulfurization (FGD) Residue Landfill (BCSS FGD Landfill). This Operations Plan presents the operational requirements for: 1) General Facility Operations, 2) Operations Management, 3) Erosion and Sedimentation Control, and 4) Vegetation Management, along with guidance for Landfill Closure and Required Regulatory Submittals. This Operations Plan was prepared consistent with 15A NCAC 13B .1626 Operational Requirements for MSWLF Facilities rules.

The BCSS FGD Landfill is owned and operated by Duke Energy Carolinas, LLC (Duke). The landfill is located in Stokes County, North Carolina on Duke property, south of the Belews Creek Steam Plant, between the east and west arms of Belews Creek Lake near Walnut Cove.

1.2 Contact Information

Correspondence and questions concerning the operation of the BCSS FGD Landfill should be directed to the appropriate entity as follows:

<u>Owner</u>

Duke Energy Carolinas, LLC—Belews Creek Steam Station
3195 Pine Hall Road, Belews Creek, North Carolina 27009
(336) 445-0746
Facility Contact: Station Sponsor for Landfill Operations or Environmental Professional

<u>State Regulatory Agency</u>

North Carolina Department of Environment and Natural Resources
Division of Waste Management, Solid Waste Section
Asheville Regional Office
2090 US Highway 70, Swannanoa, North Carolina 28778
(828) 296-4500
Environmental Engineer: Larry Frost

1.3 Safety

Landfill operations at the BCSS FGD Landfill were developed considering the health and safety of the facility's operating staff. The operating staff is provided with site-specific safety training prior to landfill operations, and on-site activities are to be conducted according to the applicable sections of Duke's Safe Work Practices.

1.4 Access and Security Requirements

The BCSS FGD Landfill is located entirely within Duke property. Security for the site is currently in place, consisting of fencing, gates, berms, wooded buffers, and security check stations. Unauthorized

vehicle access to the site is prevented around the landfill property by security check stations, woods, fencing, gates, and stormwater conveyance features.

The access road to the site is of all-weather construction and will be maintained in good condition. Potholes, ruts, and debris on the road(s) will receive timely attention in order to avoid damage to vehicles.

1.5 Operating Hours

The BCSS FGD Landfill is open seven days a week, as needed to support plant operations.

1.6 Signs

A sign providing the landfill permit number, and a statement reading, "NO HAZARDOUS OR LIQUID WASTE PERMITTED," is posted at the site entrance and shall be maintained in good condition.

Directional signs are placed along the access road to the landfill and shall be maintained in good condition at all times.

Edge-of-waste markers are installed to delineate the edge of waste. These markers shall be maintained in good condition and remain visible at all times.

1.7 Training

Due to the diversity and nature of job tasks required at the BCSS FGD Landfill, personnel shall be adequately trained to handle facility operations and maintenance.

The Station Sponsor for Landfill Operations shall have a general understanding of all the tasks required for site operations. Individuals performing the various tasks shall have adequate training for the site-specific tasks they are assigned. Duke shall provide annual training for facility personnel.

Noteworthy operations and maintenance tasks to be addressed in training include:

- Maintaining accurate records of waste loading (quantitative and qualitative)
- Operating requirements for stormwater segregation from exposed waste areas
- Operating and maintaining the leachate collection system (LCS)

All training will be documented and training records will be kept on-site. The Station Sponsor for Landfill Operations will complete operator training courses in accordance with the permit requirements.

1.8 Record Keeping

An operating record is to be maintained on-site and include the following records:

- Leachate Collection System (LCS)—Line Cleanout and Camera Monitoring Documentation
- Stormwater Maintenance and Inspection Logs
- Erosion and Sedimentation Control Inspection Logs
- Periodic Landfill Inspection Reports

- Maintenance and Repair Logs
- Dust Control Plan Monitoring Worksheets (included in the Dust Control Plan);
- Groundwater Monitoring (and Sampling) Documentation
- Operations Plan

The above records are to be kept in the operating record for the active life of the BCSS FGD Landfill and the post-closure care period. Information contained in the operating record must be furnished upon request to the North Carolina Department of Environment and Natural Resources Division of Waste Management, Solid Waste Section (Division) or be made available for inspection by the Division. Additional records kept on-site should include:

- Solid waste facility permits
- Record of the amount of solid waste received summarized on a monthly basis based on scale records
- Regulatory agency inspection reports
- Permit-to-Construct Application
- Employee training program and records
- Landfill drawings and specifications

1.9 Design Drawings

A list of the landfill design drawings is provided in Table 1. The drawings provide the location of landfill features, landfill construction details, and technical design and construction notes.

2.0 Operations Management

The primary objective of operations management at the BCSS FGD Landfill is to dispose of waste material in compliance with permit conditions while operating in a safe manner. Landfilling operations will generally proceed from the east toward the west and have a working face size based on the operator's discretion, with waste in other areas covered with intermediate cover as appropriate. In general, landfill operations in the cell will initially proceed in 10-foot lifts with cells divided by stormwater segregation berms; and once the cell floor has been covered with the initial lift of waste, the chimney drains will be installed.

2.1 Waste Handling and Landfill Sequencing

2.1.1 Landfill Capacity

The BCSS FGD Landfill Phase I was permitted to operate on January 24, 2008. The Phase 1 footprint consists of approximately 22.6 acres. The landfill began receiving waste in early March 2008. The total available airspace volume of Phase 1, according to the Construction Plan Application dated April 19, 2006, is approximately 1.50 million cubic yards. This volume corresponds to 1,701,000 tons of capacity

based on an average unit weight of 84.0 pounds per cubic foot. The expected annual quantity of waste to be placed in the landfill is 400,000 tons per year. This is based on design waste receipts of 1096 tons per day for 365 operating days per year. The expected annual quantity of waste placement is from the Permit to Operate dated January 24, 2008.

Included below are the Actual Annual Quantities placed in the landfill for the first four years of operation (2008-2011).

The yearly periods listed below correspond to the period January 1 through December 31 for the respective year.

Year	Period	Actual Annual Quantity (tons)
Year 1	2008	163,807
Year 2	2009	176,467
Year 3	2010	266,564
Year 4	2011	276,092

The remaining capacity of the landfill is 818,070 tons. Landfill sequencing is further described in Section 2.1.5.

2.1.2 Waste Acceptance, Disposal, and Screening Requirements

The BCSS FGD Landfill is permitted to accept the following on-site waste types:

- Coal combustion products (CCPs) (including fly and bottom ash, pyrites and coal mill rejects, and boiler slag);
- Gypsum produced during the flue gas desulfurization (FGD) process;
- Waste water treatment sludge (WWTS) produced during the FGD process;
- Waste limestone material;
- Sand blast material; and
- Waste coal

The landfill owner or operator shall notify the Division within 24 hours of attempted disposal of any wastes the landfill is not permitted to receive.

At a minimum, hazardous waste, yard trash, liquid wastes, regulated medical waste, sharps not properly packaged, polychlorinated biphenyls (PCB) waste as defined in 40 Code of Federal Regulations (CFR) 761, and wastes banned from disposal in North Carolina by General Statute 130A-309.10(f), must not be accepted at the landfill.

Asbestos waste will not be disposed of in the landfill.

The removal of waste from the landfill is prohibited without the owner or operator approval. Waste will be hauled and disposed of by dedicated and consistent operators from the waste source to the landfill.

Access to the interim waste storage location, haul routes, and landfill are restricted; therefore, no screening of waste is recommended.

2.1.3 **Dust, Litter, Odor, and Vector Control**

Litter, odors, and vectors are not anticipated to be concerns at the BCSS FGD Landfill. The waste placed in the landfill does not attract vectors, and windblown litter is not a problem other than some dusting. Odors are typically not a problem at FGD residue landfills.

Dust control is addressed in the *Dust Control Plan* included as Appendix I. Generally, dust control measures will be implemented when necessary and will include at a minimum watering of dusty roads and exposed work areas. The gypsum surface typically generates a crust, which reduces the dust potential for the gypsum. Additionally, intermediate cover will be vegetated as soon as is practical in order to minimize the blowing of dust on-site.

2.1.4 **Fire Control**

No open burning shall be permitted at the BCSS FGD Landfill. There are no explosive gas concerns with gypsum, ash waste, or mill rejects; therefore, the threat of fire is considered to be minimal.

Although it is unlikely, if a fire occurs at the landfill, the Station Control Room (phone number: 336-445-0521) shall be notified and equipment and stockpiled soil shall be provided to control accidental fires. Belews Creek Steam Station will notify the local fire department, which will be immediately dispatched to assist with fire control. Any fire that occurs at the landfill shall be reported to the Division within 24 hours and a written notification will be submitted within 15 days by the Station Sponsor for Landfill Operations.

2.1.5 **Landfill Sequencing**

The BCSS FGD Landfill will be developed in sequence from Cell 1 to Cell 4. The landfill Phasing Diagrams (Figures OP-1 through OP-4) are included in Appendix II and they illustrate a possible sequence of operations. The actual filling sequence, fill heights, and grades may be modified and the owner's discretion.

2.1.6 **Waste Placement**

Waste generated at the BCSS is transported from the interim waste storage areas to the landfill by using dump trucks.

- Gypsum - A conveyor system transports the gypsum from the FGD facility and stockpiles it adjacent to the BCSS FGD Landfill. The gypsum is then loaded onto dump trucks and hauled to the landfill active face, or taken off-site for sale.
- Fly Ash - A conditioning hopper is utilized to load fly ash into dump trucks and the fly ash is then hauled to the landfill active face.
- Bottom Ash, Mill Rejects, and Waste Water Treatment Sludge – These materials are loaded into dump trucks through the use of varying equipment and hauled to the landfill active face.

Upon reaching the active face of the landfill, the waste is dumped from the trucks. After the waste is dumped, the dump trucks exit the landfill and pass through a wheel wash system before returning to the interim waste storage areas. The interim waste storage areas, haul roads, and landfill are located within the secured BCSS facility.

Wastewater treatment sludge will be spread in 6-inch lifts in the center of the operational area. No wastewater treatment sludge shall be placed within 10 feet of the exterior slope.

Gypsum waste generally has a finer particle gradation than fly ash waste. Additional filtering of contact water through the gypsum waste can be achieved by placing a minimum 1-foot thick lift of fly ash waste over the protective cover prior to placing gypsum waste.

The landfill surface shall be graded to promote surface water drainage to the contact water collection system. No waste shall be placed in standing water.

2.1.7 **Compaction Requirements**

After the waste is dumped from the trucks and placed on the active face, the waste will be placed in consecutive, approximate 1-foot thick lifts that do not exceed a 10-foot operational lift. Prior to placement of a new lift, the existing waste surface should be scarified.

The waste shall be compacted using compactors and dozers and moisture conditioning shall be performed to meet the moisture requirements. The waste shall be compacted to an average of 95 percent of Standard Proctor maximum dry density, and within 5 percent of the optimum moisture content. Although not required, in-place density testing may be performed at the Owner's discretion to verify compaction requirements are achieved.

2.1.8 **Cover Requirements**

2.1.8.1 Operational Cover

Operational soil cover should be applied, as needed, for dust control and stormwater management. If needed, operational soil cover should be applied at a thickness suited to its purpose. For example, operational soil cover may be applied thinner to provide dust control and it may be applied thicker to tolerate erosion. Operational covers to provide dust control shall be as described in the Dust Control Plan in Appendix I.

Downdrains, tack-on benches, and chimney drains will be installed and extended, as appropriate. Soil diversion berms will be used to direct water, as appropriate.

Waste will be covered with interim and final cover as applicable, in accordance with the following sections in this plan. Operational soil cover is not required, provided that the Dust Control Plan included as Appendix I is followed.

2.1.8.2 Interim Cover

A 12-inch-thick interim cover layer will be placed on areas where final waste grades have been reached or where placement will be inactive for 12 months or more. The interim cover will be placed at frequencies suitable for specific industrial waste management operations.

2.1.8.3 Final Cover

The final cover system for the BCSS FGD Landfill will be completed within 180 days following the beginning of closure activities unless otherwise approved by the Division.

The final cover will consist of a compacted interim soil cover (on top of the waste), a geocomposite gas collection layer, 40-mil textured linear low density polyethylene (LLDPE) geomembrane liner, a geocomposite drainage layer, and a minimum of 2 feet of cover soil. The upper 6-inch vegetative layer will consist of on-site soil suitable for maintaining grass cover and controlling erosion. Surface water that percolates through the 6-inch vegetative layer and 18-inch thick soil layer will drain through the geocomposite drainage layer. The final cover will be vegetated with native grasses within six months following closure.

See Closure/Post-Closure Plan in Appendix III for final cover specifications and maintenance and operations requirements.

2.2 Leachate and Contact Stormwater Management

A leachate collection system (LCS) is in place to drain the leachate within the active cell to the down-gradient leachate storage basin. On the cell floor area, a 12-inch thick layer of soil cover is over the geomembrane liner and the leachate collection and removal system.

Leachate and contact stormwater are collected in the leachate storage basin and routed by way of a pump station, located adjacent to the basin, to the BCSS Ash Basin, which discharges in accordance with the BCSS plant's National Pollutant Discharge Elimination System (NPDES) permit.

2.3 Leachate Collection System (LCS)

The leachate collection system consists of a geonet/geotextile with a perforated collection/header piping system that drains to the leachate storage basin. In order to better manage contact water, a chimney drain network has been designed to route leachate through the waste and out of the landfill through the existing leachate outfalls. Refer to Appendix IV for the design and description of the Chimney Drain System. The slope on the geomembrane is positive to promote leachate transport from the collection system to the leachate storage basin. The geonet is a polyethylene synthetic mesh that transmits leachate to the leachate collection pipe. The leachate collection header pipes drain directly to the leachate storage basin where a riser pipe routes leachate and contact stormwater to the BCSS Ash Basin. As waste placement proceeds, the leachate collection system will be modified as shown on the design drawings.

2.3.1 **LCS Maintenance**

The maintenance of the leachate management system's physical facilities (consisting of high-density polyethylene [HDPE] piping and the contact water storage basin) and records will be performed by or under the direct supervision of Duke. Visual observations of proper LCS system performance will be made monthly by Duke staff to verify that the LCS is performing properly.

In addition to the primary geomembrane basin liner, the lined leachate storage basin is equipped with a Leak Detection System (LDS), consisting of a secondary geomembrane liner and drainage system that drains to a sump, located on the south end of the basin. The purpose of this system is to detect and to

collect liquids that may leak through the primary liner and to pump the liquid to the pump station. Refer to Appendix V for a description of the LDS and the response plan.

Clean-out pipes are located on the LCS leachate header pipes. LCS header pipes will be cleaned out by the use of a clean-out snake or high-pressure water flushing at least once a year and will be remote-camera monitored at least once every 5 years. The frequency of clean-out and camera inspections may be modified based on consecutive inspection results and observed operating conditions.

2.3.2 LCS Record Keeping and Sampling

Records will be maintained at BCSS documenting the leachate line cleanout and camera monitoring.

Leachate from the LCS will be sampled on a semi-annual basis.

2.3.3 Contingency Plan

In the unlikely event that leachate cannot be pumped to the active BCSS Ash Basin, leachate will be temporarily stored within the landfill until such time that draining operations to the active ash basin can be restored. In such an event, the Division shall be notified in writing, within 30 days, about the events and corrective actions taken.

2.4 Stormwater Collection and Conveyance

Stormwater that does not come in contact with waste will be treated as non-contact water. Non-contact stormwater runoff onto the landfill is prevented by diversion ditches around the landfill.

To improve operations, surface water should be diverted from the operational area. Excessive surface water at the working face creates difficulties for maneuvering equipment and prevents the operator from achieving maximum compaction of waste. To divert surface water runoff away from the working face, temporary diversion berms will be installed on the current lift, upslope of the working face and in other locations as dictated by the direction of grade. The area between the temporary berm and the working face should be sloped to the chimney drains, when practical, and graded to prevent any accumulation of water. The soil cover in the areas beyond the diversion berms will be uniformly graded and compacted to prevent the formation of erosion channels. In the event that channels do form, the cover should be promptly repaired.

Stormwater collection and conveyance measures will be checked regularly and maintained such that necessary repairs can be made as early as practical.

2.4.1 Stormwater Discharge

The stormwater system at the landfill was designed to help prevent the discharge of pollutants. Landfill operation shall not cause a discharge of pollutants into waters of the United States, including wetlands, that violates any requirement of the Clean Water Act, including, but not limited to NPDES requirements, pursuant to Section 402. In addition, under the requirements of Section 404 of the Clean Water Act, the discharge of dredged or fill material into waters of the state that would be in violation of the requirements shall not be allowed by landfill operations.

Operations at the landfill shall not cause the discharge of a non-point source of pollution to waters of the United States, including wetlands, that violates any requirement of an area-wide or statewide water quality management plan that has been approved under Section 208 or 319 of the Clean Water Act, as amended.

2.5 Contact and Non-Contact Water Basin Maintenance Requirements

All stormwater features (i.e., diversion ditches, berms, risers, discharge pipes, etc.) associated with Phase 1 until final closure will be inspected and documented monthly for signs of damage, settlement, clogging, silt buildup, or washouts. If necessary, repairs to stormwater control features will be made as early as practical.

2.6 Groundwater Monitoring Well Access Requirements

Groundwater monitoring wells are located around the landfill perimeter. A readily accessible, unobstructed, path shall be maintained so that monitoring wells may be accessed by vehicles. Care must be taken around the wells to prevent any damage to the wells.

2.7 Landfill Gas Management

Because of the nature of the waste to be placed in the FGD Residue Landfill, Duke does not anticipate that methane or hydrogen sulfide gas will be generated or that odor will be an issue during operations. Therefore, landfill gas monitoring and management is not proposed.

A landfill gas venting system is provided as part of the engineered cover system.

3.0 Erosion and Sedimentation Control

Erosion and sedimentation control (E&SC) during operations consist of monitoring E&SC stormwater conveyance features and surface erosion.

3.1 E&SC Measures Monitoring and Maintenance

Adequate measures are to be practiced to prevent erosion in general accordance with E&SC measures included on Drawing No. BCM6451.00-0016.001 (FGD Residue Landfill), Drawing No. BCM6451.00-0017.001 (Stockpile Area) and Drawing No. BCM6451.00-0018.001 (FGD Landfill Erosion Control Details), all dated April 19, 2006 and prepared by Chas. H. Sells, Inc.

Erosion control measures include:

- Disturbing as little area as practical at any one time for landfilling operations
- Seeding/mulching of all disturbed areas commencing as soon as practically possible. Employing erosion netting or sod on steep slopes and other erosion prone areas.

- Use of earthen berms, hay bales, silt fences, riprap, or equivalent devices downgradient of disturbed areas, stockpiles, drainage pipe inlets and outlets, and at intervals along grassed waterways, until such time as permanent vegetation is established.

Erosion and sedimentation control structures include stormwater best management practice (BMP) systems, sediment basins, ash runoff basins, contact water conveyance zones, and channels. Stormwater BMP's, sediment basins, and ash runoff basins shall be checked after periods of significant rainfall. Sediment shall be removed from each structure when sediment accumulates to one half of the design depth. Sediment removal shall bring BMP's to their original design depth. The BMP's, sediment basins, embankments, spillways and outlets shall also be observed for erosion damage. Necessary repairs shall be made immediately. Trash or debris within the riser structures or outfalls shall be removed.

Channels shall be observed for damage after each runoff event. Riprap-lined channels and outlet protection aprons used to prevent damage to channel vegetation shall be observed for washouts. Riprap shall be added to these areas, as needed, to maintain the integrity of the structure.

Embankment slopes shall be periodically observed for erosion. The embankment slopes shall be mowed at least once a year. The embankment slopes shall be refertilized in the second year unless vegetation growth is fully adequate. Damaged areas shall be reseeded, fertilized and mulched immediately. Seeding, fertilizing, and mulching shall be in accordance with the North Carolina Erosion and Sedimentation Control Guidelines and in accordance with the active Erosion and Sediment Control Permit.

3.2 Surface Erosion Monitoring

Adequate erosion control measures shall be established to help prevent sediment from leaving the site. Channels will be observed once every seven days and after any rainfall event of 0.5 inches or greater within 24 hours.

Slopes will be periodically checked for erosion and vegetative quality, fertilized, and mowed. A slope or portion thereof shall be identified as needing maintenance if it meets any one of the following conditions:

- Exposed waste on exterior slopes
- Areas of cracking, sliding, or sloughing
- Areas of seepage

Slopes identified as needing maintenance shall be repaired as soon as practical and as appropriate to correct deficiencies. Repair activities may include re-dressing the slope, filling in low areas, and/or seeding.

4.0 Vegetation Management

Within six months after final termination of disposal operations at the site, the area shall be stabilized with vegetation as required by design drawings and Closure/Post-Closure Plan (Appendix III). Temporary seeding will be applied as required.

Temporary erosion control measures may be required until permanent cover is established. Mulching, until a vegetative cover is established, can stabilize areas where final grades have been reached. Soil mulching can be achieved using materials such as: wood chips, straw, hay, asphalt emulsion, jute matting, and synthetic fibers. Mulches allow for greater water retention; reduce the amount of runoff; retain seeds, fertilizer, and lime in place; and improve soil moisture and temperature conditions.

4.1 Temporary Seeding

Temporary seeding will be applied as follows (source: *NC Erosion and Sediment Control Planning and Design Manual* [June 2006, Revised March 2009]):

LATE WINTER TO EARLY SPRING

Seeds	Pounds Per Acre	Dates of Planting
Rye (grain)	120	January 1 to May 1
Annual lespedeza (kobe)	50	January 1 to May 1

Note: Omit lespedeza when duration of temporary cover is not to extend beyond June.

SUMMER

Seeds	Pounds Per Acre	Dates of Planting
German millet	40	May 1 to August 15

FALL

Seeds	Pounds Per Acre	Dates of Planting
Rye (grain)	50	August 15 to December 31

Soil Amendments	Pounds Per Acre
Agricultural limestone	2,000
Fertilizer (10-10-10)	1,000
Mulch	4,000

Note: Soil amendments are for all-season temporary seeding applications.

4.2 Permanent Seeding

Permanent seeding will be applied as follows (source: NC *Erosion and Sediment Control Planning and Design Manual* [June 2006, Revised March 2009]):

Seeds	Pounds Per Acre	Dates of Planting
Tall fescue	100	September 1 to April 15
Sericea lespedeza	15	September 1 to May 1
Kobe lespedeza	10	May 1 to September 1
Rye	40	August 15 to April 15

Soil Amendments	Pounds Per Acre
Agricultural limestone	4,000
Fertilizer (10-10-10)	1,000
Mulch	4,000

Note: Perform soil test to determine proper soil amendments; if not available, use the quantities above.

5.0 Landfill Closure

The BCSS FGD Landfill will be closed in accordance with the design drawings and Closure/Post-Closure Plan (Appendix III). The Closure/Post-Closure Plan outlines the sequence for closing the landfill and the post-closure maintenance activities. Closure is designed to minimize the need for long-term maintenance and to control the post-closure release of contaminants. Closure activities may be revised as appropriate for materials, specifications, technology advancements, or changes in regulations at the time the landfill is closed or in post-closure. In general, the landfill development is designed so that final cover can be established as soon as possible.

6.0 Required Regulatory Submittals

Submittal	Requirement	Reporting/Action Frequency
Groundwater Monitoring Reports	Maintain a record of all monitoring events and analytical data in accordance with the Groundwater Monitoring Plan. Reports of the analytical data for each water quality monitoring sampling event shall be submitted to DENR Division of Waste Management (DWM) in a timely manner.	Semi-annually
Annual Tonnage Reports	Tons of waste received and disposed of in the landfill shall be reported to the DWM on forms prescribed by the DWM. Refer to the Permit to Operate for annual reporting requirement information.	Annually Must submit no later than August 1 each year
10-Year Waste Management Plan	Per North Carolina G.S. 130A-309.09D (c): • A 10-year waste management plan shall be developed for this landfill and submitted to DWM. • The plan shall be updated and submitted to DWM at least every three years. • A report on the implementation of the plan is required to be submitted to DWM by August 1 of each year.	10-year plan prepared every 10 years 10-year plan updated every 3 years Implementation report annually

Table 1
Belews Creek FGD Landfill
List of Construction Drawings

Description of Drawing	Drawing Number	Drawing Revision	Duke Document Number
Existing Conditions Plan	CP-1	1	BCM 6451.00-0007.001
Top of Liner Grading Plan	CP-2	3	BCM 6451.00-0008.001
Access Road Grading Plan	CP-2.1	1	BCM 6451.00-0008.001A
Access Road Profiles	CP-2.2	0	BCM 6451.00-0008.001B
Initial Earthwork Construction Plan	CP-2.3	0	BCM 6451.00-0008.001C
Leachate Collection System	CP-3	3	BCM 6451.00-0009.001
Cell Operations - Leachate Collection and Removal System	CP-3.1	5	BCM 6451.00-0009.002
Operational Cover Grading Plan	CP-4	5	BCM 6451.00-0010.001
Cell Details	CP-5	4	BCM 6451.00-0011.001
Stormwater Basin Plan and Details	CP-6	5	BCM 6451.00-0012.001
Stormwater Basin Leak Detection System	CP-6.1	1	BCM 6451.00-0012.002
Pump Station Details	CP-7	3	BCM 6451.00-0013.001
Final Closure Plan and Details	CP-8	1	BCM 6451.00-0014.001
Final Closure Gas Venting System Plan	CP-9	1	BCM 6451.00-0015.001
FGD Erosion and Sediment Control Plan FGD Residue Landfill	CP-10	1	BCM 6451.00-00016.001
FGD Erosion and Sediment Control Plan Stockpile Areas	CP-11	1	BCM 6451.00-0017.001
FGD Erosion and Sediment Control Plan Details	CP-12	1	BCM 6451.00-0018.001
Profile A-A' & B-B'	CP-13	2	BCM 6451.00-0019.001
Profile C-C' & D-D'	CP-14	2	BCM 6451.00-0020.001

Appendix I

Dust Control Plan

INTRODUCTION AND SITE DESCRIPTION

This Dust Control Plan is for the Duke Energy's Belew's Creek Steam Station FGD (flue gas desulfurization) Residue Landfill. This Plan provides dust control methods for managing dust emissions at this site and provides a monitoring program and corrective action response to contain CCP's (coal combustion products) to prevent dust nuisances to employees and the public. The monitoring program will aid Duke Energy and the landfill operator in evaluating the dust control methods, or combination of dust control methods, that prove effective with site specific conditions.

The FGD Residue landfill has an approximate 22.6-acre footprint. Currently, this site is permitted to accept flue gas desulfurization (FGD) residue and will create a residue generally comprising of gypsum. This Plan will be added as an appendix to the approved Operations Plan for the FGD Residue Landfill.

DUST CONTROL METHODS

The primary potential source of dust emissions in the landfill is the top deck area and active area of waste placement. These areas are at a higher risk for producing dust due to vehicular and equipment traffic and earthworks-like construction. Exterior landfill slopes are less of a dust control concern as they have intermediate or operational soil covers which are vegetated as required in the Operations Plan.

Dust emissions from the landfill can be controlled through a variety of dust control methods. Possible dust control methods are identified herein. Dust control methods may be characterized as products and/or applications, structural wind breaks and/or covers, and operational methods.

Dust control methods for the landfill area include:

- Watering;
- Establishing vegetative cover;
- Mulching;
- Structural controls consisting of:
    - Wind breaks (i.e. fencing and/or berms); and
    - Temporary coverings (i.e. tarps);
- Spray applied dust suppressants consisting of, and not limited to:
    - Anionic asphalt emulsion;
    - Latex emulsion;
    - Resin in water;
    - Polymer based emulsion; and
    - Mineral mortar coatings (i.e. posi-shell);
- Calcium chloride;
- Soil stabilizers (i.e. soil cements);

- Operational soil cover;
- Modifying the active working area; and
- Modifying operations during dry and windy conditions.

The operator may use, and is not limited to, combinations of these dust control methods or any method that is technically sound to control dust for the specific site conditions. If the operator intends to use a dust control method not presented above, the proposed dust control method will be evaluated on a case by case basis to assess the effectiveness with specific site conditions. For the purposes of this Plan, operational soil cover will be defined as soil material applied at a suitable thickness to provide dust control. The effectiveness of the dust control methods implemented should be evaluated through a dust monitoring program outlined in Section 3.

Operational equipment generally consists of dump trucks, vibratory smooth drum roller, bulldozer, water truck, spray trailer, track hoe, and service truck. Operational equipment will be used to construct, install, apply, and/or repair dust control methods. The operator will make provisions to alleviate any on-site issues that arise when primary equipment is being maintained or is inoperable. In the event that Belew's Creek Steam Station FGD Residue Landfill is permitted to accept additional CCP's, the landfill operator will make provisions to have the necessary equipment to control multiple fugitive CCP residue dusting emission events.

MONITORING AND CORRECTIVE ACTION RESPONSE

This section describes a dust monitoring program and suggests corrective action responses should fugitive emissions be observed.

Monitoring

During landfill operations, a dust monitoring program will be implemented to evaluate the dust control measure performance and observe the areas for dust emissions. The dust monitoring program consists of performing visual observations of dust prone areas, dust control measures, and monitoring existing and forecasted weather conditions.

Dust emissions can occur under many conditions. For the purposes of this Plan, dust emissions are characterized as fugitive emissions, where FGD residue dust is located outside the limit of landfill waste. This is most likely to occur during windy, dry, and hot weather conditions. Therefore, the operator will monitor both existing and forecasted weather conditions and use dust control measures suited to the weather conditions. The dust control measures shall be implemented prior to the forecasted weather conditions.

Equipment operators shall continuously observe the active face and other areas within the landfill limit for dust emissions. In addition, preventative dust control measures should be observed and documented at least twice daily (morning and afternoon) when the landfill is in operation to evaluate the dust control measure performance. Additional observations may be necessary as site and weather conditions dictate. Observations will be documented on the attached "Monitoring Worksheet," or online database/worksheet, etc. Due to the continual

maintenance necessary on moisture conditioned and spray-applied areas, the operator shall pay particular attention to these areas. Structural controls shall be observed to monitor that they are achieving their intended purpose. Observations in the landfill area may be made with reference to the attached cells grid systems.

Monitoring will be conducted during times when the landfill is in operations. The operator shall continue to provide necessary dust control measures during periods when operations are inactive (i.e. outages, weekends, holidays). Operators are to establish appropriate measures so that dust emissions are not reasonably likely to occur during inactive operations periods when monitoring is not being conducted.

Corrective Action

If fugitive dust emissions are observed and observations indicate dust control measures are not achieving their intended purpose, then appropriate corrective actions will be taken. Dust control measures should be reapplied, repaired, or added, as necessary, to control dust emissions. The operator will construct, install, apply, and/or repair dust control measures prior to the end of the work day to control dust emissions during non-operating hours. The operator will implement dust control measures as preventative controls rather than in response to fugitive dust emissions.

FGD Residue Landfill
Permit No. 85-05

Dust Control Plan -
Monitoring Worksheet

Belews Creek Steam Station
Belews, North Carolina

Week:

Date/Time	Dust Control Method in Use	Effective Yes/No	Observation Location	Preventative or Corrective Action Taken Yes/No	Observations/comments including: weather conditions, wind speeds, precipitation, forecast, preventative or corrective actions taken (if needed), additional operational notes	Name of Observer

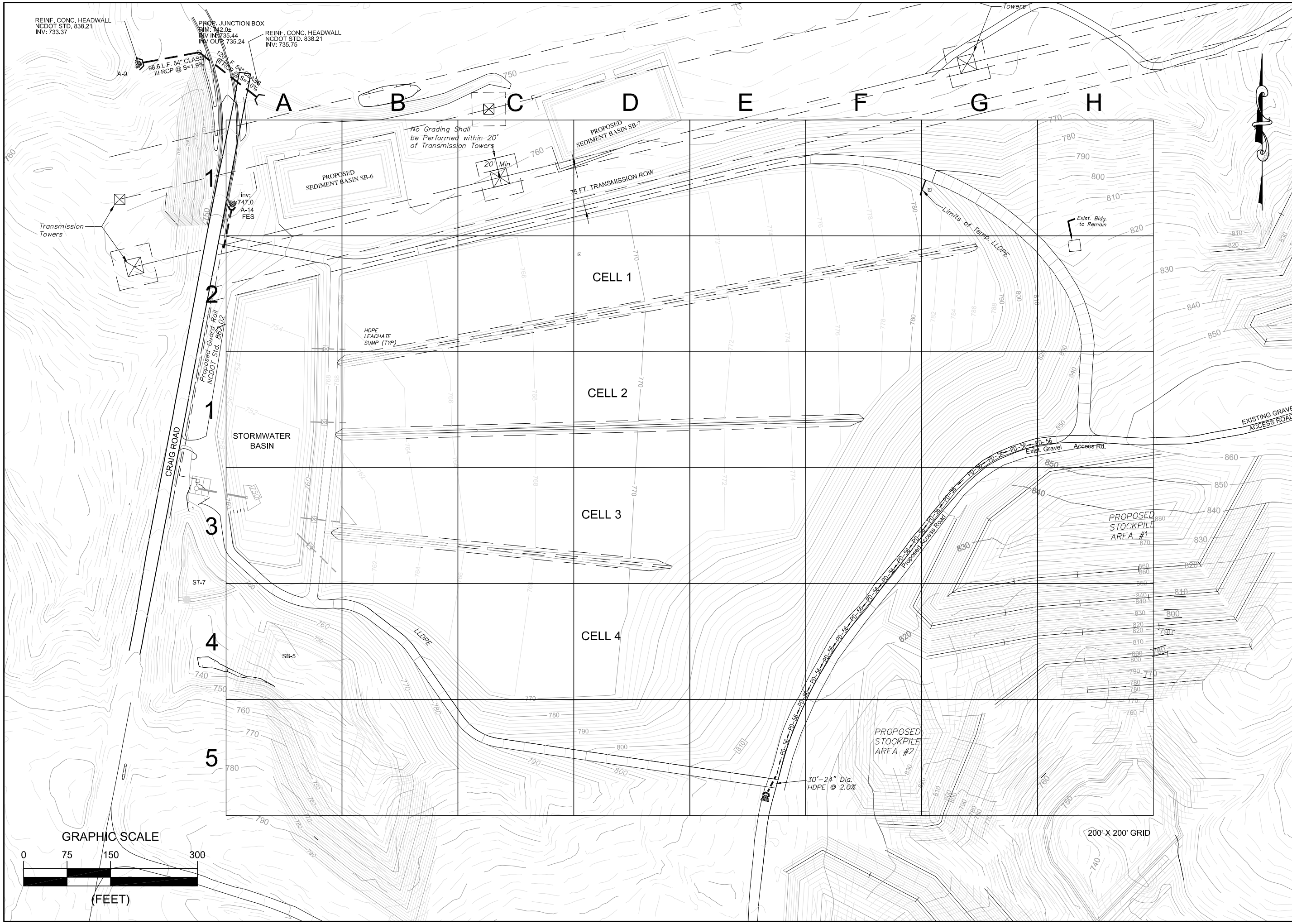

DATE	REVISIONS AND RECORD OF ISSUE	NO	BY	CK	APP

DESIGNED HRW
DRAWN HRW
CHECKED EEA
APPROVED EEA
DATE 6/20/11

© 2011 Joyce Engineering, Inc.
All rights reserved

ENGINEERING, INC.
2211 W. MEADOWVIEW ROAD
GREENSBORO, NC 27407
PHONE: (336) 323-0092
NC CORP LIC: C-0782

DUKE ENERGY BCSS FGD LANDFILL
BELWES CREEK, NORTH CAROLINA

DUST CONTROL PLAN
OPERATIONS GRID

PROJECT NO.
845.1101.01

SCALE
AS SHOWN

DRAWING NO.
GRID EXHIBIT

L:\Duke Energy\Belews Creek\FGD\GRID EXHIBIT.dwg Layout\grid section

Appendix II

Phasing Drawings

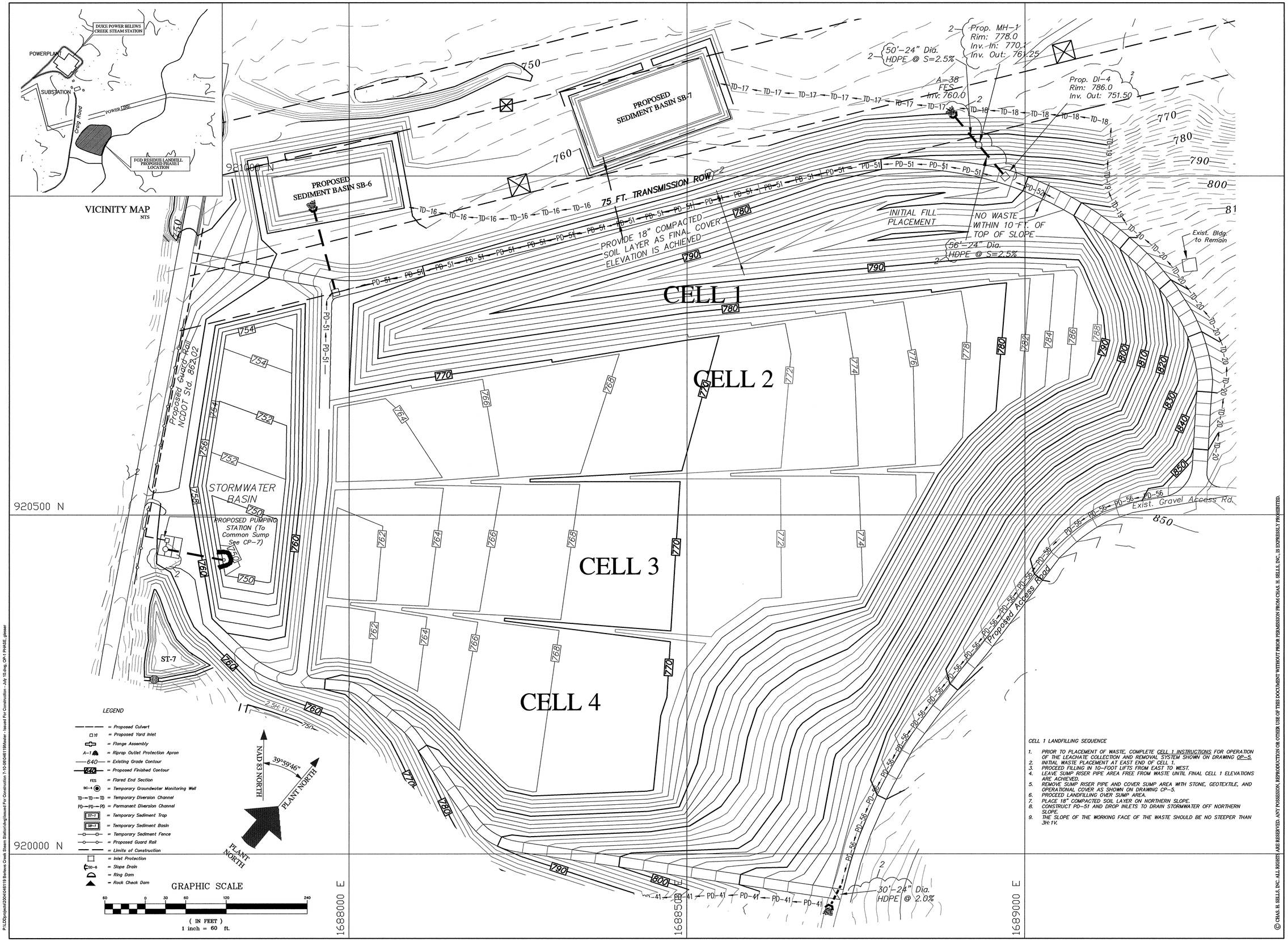

CELL 1 LANDFILLING SEQUENCE

1. PRIOR TO PLACEMENT OF WASTE, COMPLETE CELL 1 INSTRUCTIONS FOR OPERATION OF THE LEACHATE COLLECTION AND REMOVAL SYSTEM SHOWN ON DRAWING OP-5.
2. INITIAL WASTE PLACEMENT AT EAST END OF CELL 1.
3. PROCEED FILLING IN 10-FOOT LIFTS FROM EAST TO WEST.
4. LEAVE SUMP RISER PIPE AREA FREE FROM WASTE UNTIL FINAL CELL 1 ELEVATIONS ARE ACHIEVED.
5. REMOVE SUMP RISER PIPE AND COVER SUMP AREA WITH STONE, GEOTEXTILE, AND OPERATIONAL COVER AS SHOWN ON DRAWING CP-5.
6. PROCEED LANDFILLING OVER SUMP AREA.
7. PLACE 18" COMPACTED SOIL LAYER ON NORTHERN SLOPE.
8. CONSTRUCT PD-51 AND DROP INLETS TO DRAIN STORMWATER OFF NORTHERN SLOPE.
9. THE SLOPE OF THE WORKING FACE OF THE WASTE SHOULD BE NO STEEPER THAN 3H:1V.

© CHAS. H. SELLS, INC. ALL RIGHTS ARE RESERVED. ANY POSSESSION, REPRODUCTION OR OTHER USE OF THIS DOCUMENT WITHOUT PRIOR PERMISSION FROM CHAS. H. SELLS, INC. IS EXPRESSLY PROHIBITED.

CHAS. H. SELLS, INC.
Consulting Engineers, Surveyors & Photogrammetrists
128 Overhill Drive
Suite 105
Mooresville, NC 28117
Tel: 704-662-0100
Fax: 704-662-0101
www.chashsells.com

NORTH CAROLINA PROFESSIONAL SEAL 17582 ENGINEER DAN E. BREWER
8/2/06

BELEWS CREEK STEAM STATION
FGD RESIDUE LANDFILL
STOKES COUNTY, NORTH CAROLINA

REVISIONS

2	8/2/06	Duke Comments
1	4/18/06	Issued for Revised CPA
0	9/30/05	Issued for CPA

PROJECT #: 046119 DATE: 9/30/05

DRAWN BY: DB CHECKED BY: DB

TITLE

PHASING DIAGRAM

SHEET OP-1

P:\LDDrojects\2004\046119 Belews Creek Steam Station\dwg\Issued For Construction 7-10-06\046119Master - Issued For Construction - July 10.dwg, OP-1 PHASE, gbeaver

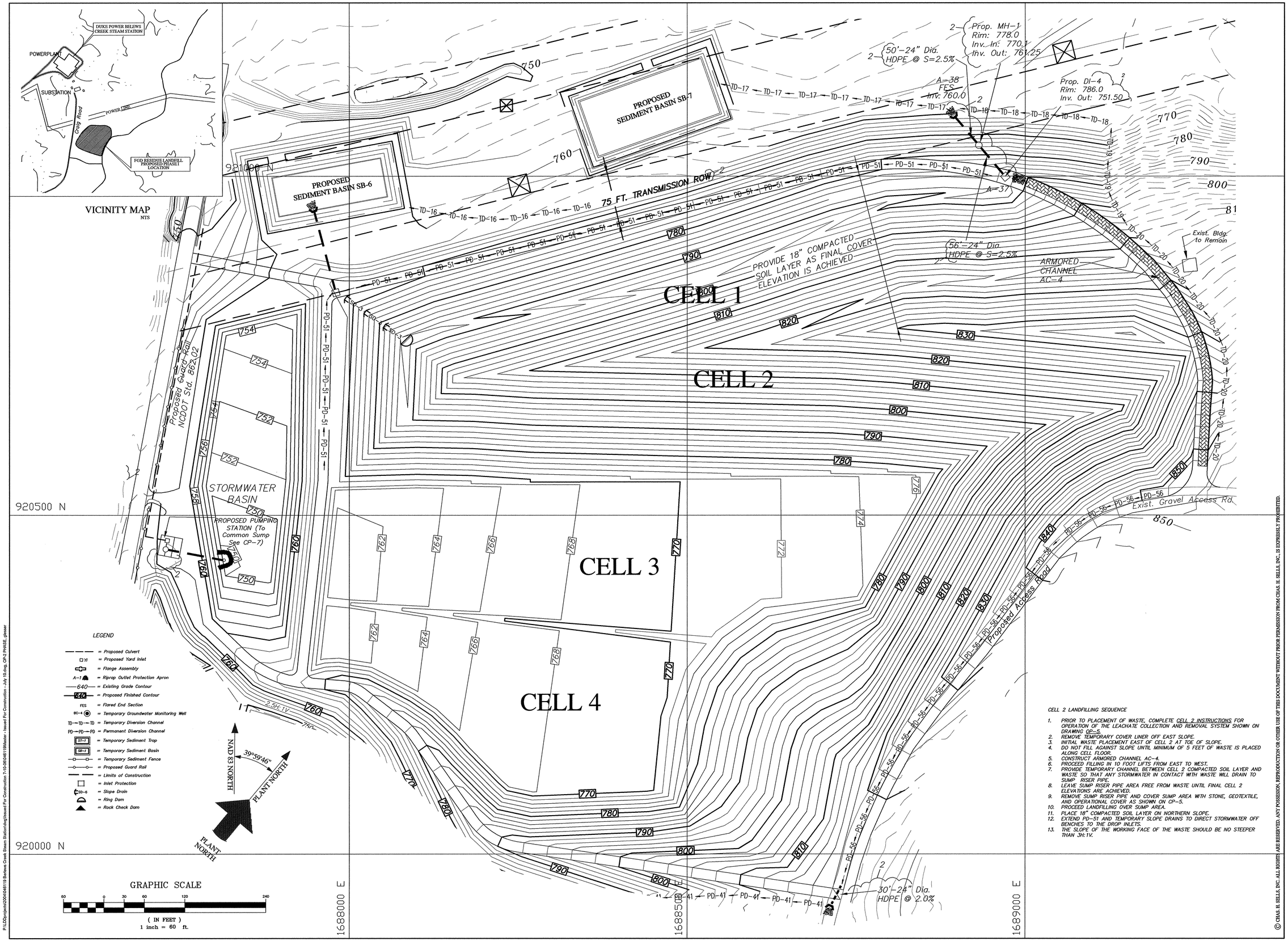

LEGEND

- = Proposed Culvert
- = Proposed Yard Inlet
- = Flange Assembly
- A-1 = Riprap Outlet Protection Apron
- 640 = Existing Grade Contour
- 840 = Proposed Finished Contour
- FES = Flared End Section
- BC-4 = Temporary Groundwater Monitoring Well
- TD = Temporary Diversion Channel
- PD = Permanent Diversion Channel
- ST-1 = Temporary Sediment Trap
- SB-1 = Temporary Sediment Basin
- = Temporary Sediment Fence
- = Proposed Guard Rail
- = Limits of Construction
- = Inlet Protection
- SD-6 = Slope Drain
- = Ring Dam
- = Rock Check Dam

CELL 2 LANDFILLING SEQUENCE

1. PRIOR TO PLACEMENT OF WASTE, COMPLETE CELL 2 INSTRUCTIONS FOR OPERATION OF THE LEACHATE COLLECTION AND REMOVAL SYSTEM SHOWN ON DRAWING OP-5.
2. REMOVE TEMPORARY COVER LINER OFF EAST SLOPE.
3. INITIAL WASTE PLACEMENT EAST OF CELL 2 AT TOE OF SLOPE.
4. DO NOT FILL AGAINST SLOPE UNTIL MINIMUM OF 5 FEET OF WASTE IS PLACED ALONG CELL FLOOR.
5. CONSTRUCT ARMORED CHANNEL AC-4.
6. PROCEED FILLING IN 10 FOOT LIFTS FROM EAST TO WEST.
7. PROVIDE TEMPORARY CHANNEL BETWEEN CELL 2 COMPACTED SOIL LAYER AND WASTE SO THAT ANY STORMWATER IN CONTACT WITH WASTE WILL DRAIN TO SUMP RISER PIPE.
8. LEAVE SUMP RISER PIPE AREA FREE FROM WASTE UNTIL FINAL CELL 2 ELEVATIONS ARE ACHIEVED.
9. REMOVE SUMP RISER PIPE AND COVER SUMP AREA WITH STONE, GEOTEXTILE, AND OPERATIONAL COVER AS SHOWN ON CP-5.
10. PROCEED LANDFILLING OVER SUMP AREA.
11. PLACE 18" COMPACTED SOIL LAYER ON NORTHERN SLOPE.
12. EXTEND PD-51 AND TEMPORARY SLOPE DRAINS TO DIRECT STORMWATER OFF BENCHES TO THE DROP INLETS.
13. THE SLOPE OF THE WORKING FACE OF THE WASTE SHOULD BE NO STEEPER THAN 3H:1V.

© CHAS. H. SELLS, INC. ALL RIGHTS ARE RESERVED. ANY POSSESSION, REPRODUCTION OR OTHER USE OF THIS DOCUMENT WITHOUT PRIOR PERMISSION FROM CHAS. H. SELLS, INC. IS EXPRESSLY PROHIBITED.

CHAS. H. SELLS, INC.
Consulting Engineers, Surveyors & Photogrammetrists
128 Overhill Drive
Suite-105
Mooresville, NC 28117
Tel: 704-662-0100
Fax: 704-662-0101
www.chashsells.com

NORTH CAROLINA PROFESSIONAL SEAL 17582 ENGINEER DAN E. BREWER
8/2/06

BELEWS CREEK STEAM STATION
FGD RESIDUE LANDFILL

STOKES COUNTY, NORTH CAROLINA

REVISIONS		
2	8/2/06	Duke Comments
1	4/18/06	Issued for Revised CPA
0	9/30/05	Issued for CPA

PROJECT #: 046119 DATE: 9/30/05

DRAWN BY: DB CHECKED BY: DB

TITLE

PHASING DIAGRAM

SHEET OP-2

P:\LDDprojects\2004\046119 Belews Creek Steam Station\dwg\Issued For Construction 7-10-06\046119Master - Issued For Construction - July 10.dwg, CP-2 PHASE, gesser

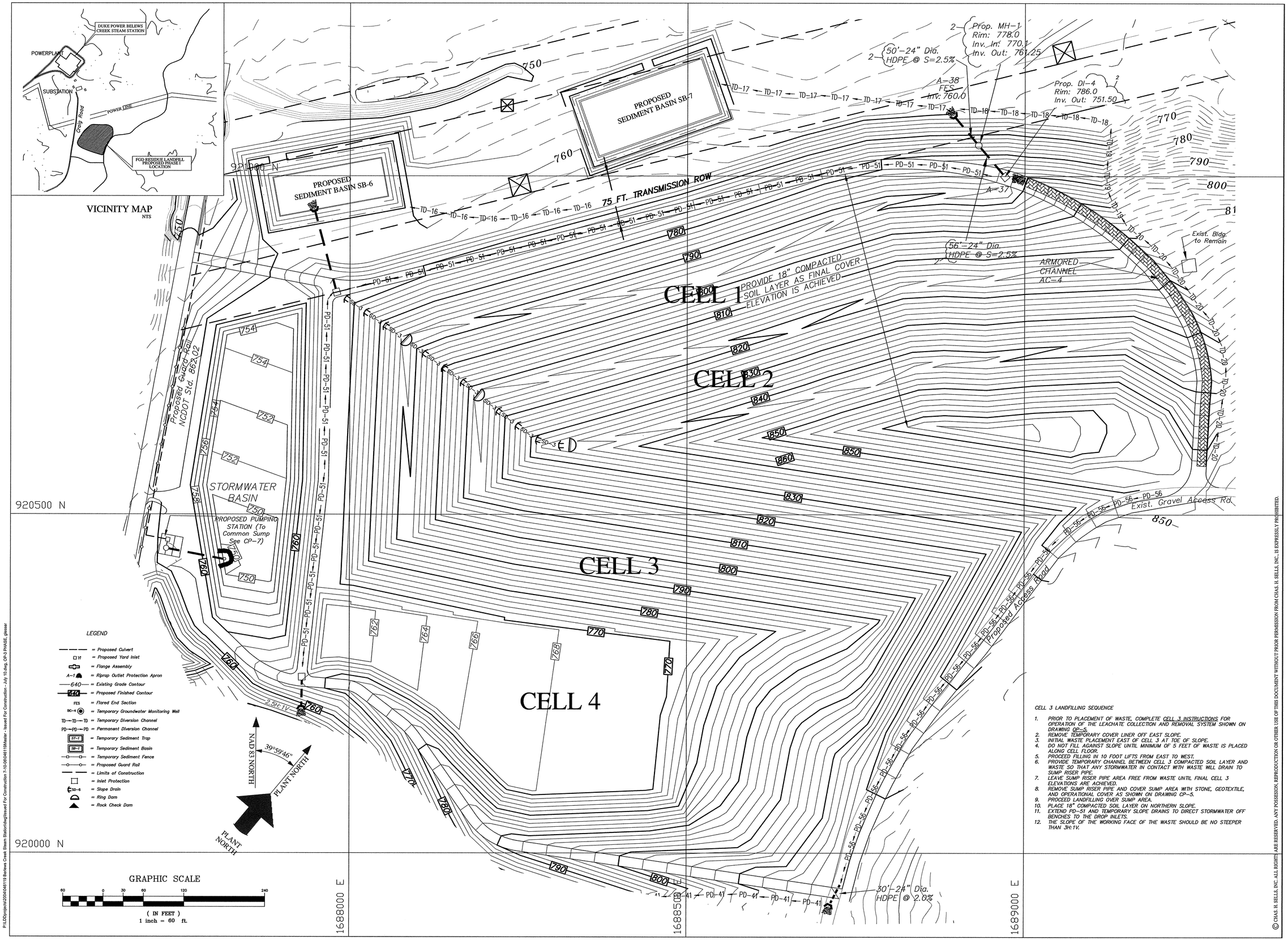

LEGEND

- = Proposed Culvert
- = Proposed Yard Inlet
- = Flange Assembly
- A-1 = Riprap Outlet Protection Apron
- 640 = Existing Grade Contour
- 640 = Proposed Finished Contour
- FES = Flared End Section
- BG-1 = Temporary Groundwater Monitoring Well
- TD = Temporary Diversion Channel
- PD = Permanent Diversion Channel
- ST-1 = Temporary Sediment Trap
- SB-1 = Temporary Sediment Basin
- = Temporary Sediment Fence
- = Proposed Guard Rail
- = Limits of Construction
- = Inlet Protection
- SD-6 = Slope Drain
- = Ring Dam
- = Rock Check Dam

CELL 3 LANDFILLING SEQUENCE

1. PRIOR TO PLACEMENT OF WASTE, COMPLETE CELL 3 INSTRUCTIONS FOR OPERATION OF THE LEACHATE COLLECTION AND REMOVAL SYSTEM SHOWN ON DRAWING OP-5.
2. REMOVE TEMPORARY COVER LINER OFF EAST SLOPE.
3. INITIAL WASTE PLACEMENT EAST OF CELL 3 AT TOE OF SLOPE.
4. DO NOT FILL AGAINST SLOPE UNTIL MINIMUM OF 5 FEET OF WASTE IS PLACED ALONG CELL FLOOR.
5. PROCEED FILLING IN 10 FOOT LIFTS FROM EAST TO WEST.
6. PROVIDE TEMPORARY CHANNEL BETWEEN CELL 3 COMPACTED SOIL LAYER AND WASTE SO THAT ANY STORMWATER IN CONTACT WITH WASTE WILL DRAIN TO SUMP RISER PIPE.
7. LEAVE SUMP RISER PIPE AREA FREE FROM WASTE UNTIL FINAL CELL 3 ELEVATIONS ARE ACHIEVED.
8. REMOVE SUMP RISER PIPE AND COVER SUMP AREA WITH STONE, GEOTEXTILE, AND OPERATIONAL COVER AS SHOWN ON DRAWING CP-5.
9. PROCEED LANDFILLING OVER SUMP AREA.
10. PLACE 18" COMPACTED SOIL LAYER ON NORTHERN SLOPE.
11. EXTEND PD-51 AND TEMPORARY SLOPE DRAINS TO DIRECT STORMWATER OFF BENCHES TO THE DROP INLETS.
12. THE SLOPE OF THE WORKING FACE OF THE WASTE SHOULD BE NO STEEPER THAN 3H:1V.

© CHAS. H. SELLS, INC. ALL RIGHTS ARE RESERVED. ANY POSSESSION, REPRODUCTION OR OTHER USE OF THIS DOCUMENT WITHOUT PRIOR PERMISSION FROM CHAS. H. SELLS, INC. IS EXPRESSLY PROHIBITED.

CHAS. H. SELLS, INC.
Consulting Engineers, Surveyors & Photogrammetrists
128 Overhill Drive
Suite 105
Mooresville, NC 28117
Tel: 704-662-0100
Fax: 704-662-0101
www.chashsells.com

NORTH CAROLINA PROFESSIONAL SEAL 17582 ENGINEER DAN E. BREWER 8/2/06

BELEWS CREEK STEAM STATION
FGD RESIDUE LANDFILL

STOKES COUNTY, NORTH CAROLINA

REVISIONS		
2	8/2/06	Duke Comments
1	4/18/06	Issued for Revised CPA
0	9/30/05	Issued for CPA

PROJECT #: 046119 DATE: 9/30/05

DRAWN BY: DB CHECKED BY: DB

TITLE

PHASING DIAGRAM

SHEET OP-3

P:\LDDprojects\2004\046119 Belews Creek Steam Station\dwg\Issued For Construction 7-10-05\046119Master - Issued For Construction - July 10.dwg, OP-3 PHASE, glasser

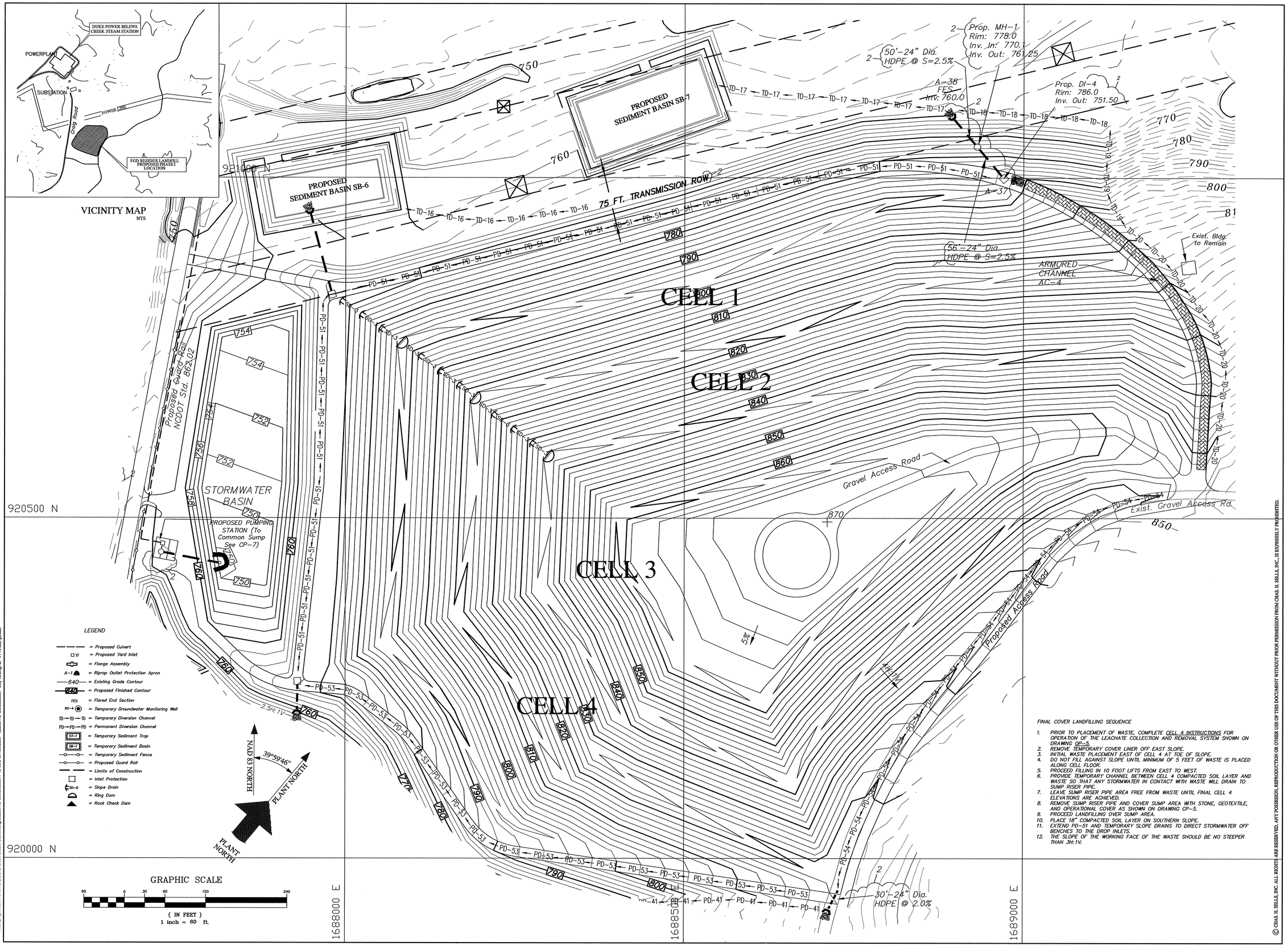

LEGEND

- = Proposed Culvert
- = Proposed Yard Inlet
- = Flange Assembly
- A-1 = Riprap Outlet Protection Apron
- 640 = Existing Grade Contour
- 640 = Proposed Finished Contour
- FES = Flared End Section
- BC-4 = Temporary Groundwater Monitoring Well
- TD = Temporary Diversion Channel
- PD = Permanent Diversion Channel
- ST-7 = Temporary Sediment Trap
- SB-7 = Temporary Sediment Basin
- = Temporary Sediment Fence
- = Proposed Guard Rail
- = Limits of Construction
- = Inlet Protection
- SD-6 = Slope Drain
- = Ring Dam
- = Rock Check Dam

FINAL COVER LANDFILLING SEQUENCE

1. PRIOR TO PLACEMENT OF WASTE, COMPLETE CELL 4 INSTRUCTIONS FOR OPERATION OF THE LEACHATE COLLECTION AND REMOVAL SYSTEM SHOWN ON DRAWING OP-5.
2. REMOVE TEMPORARY COVER LINER OFF EAST SLOPE.
3. INITIAL WASTE PLACEMENT EAST OF CELL 4 AT TOE OF SLOPE.
4. DO NOT FILL AGAINST SLOPE UNTIL MINIMUM OF 5 FEET OF WASTE IS PLACED ALONG CELL FLOOR.
5. PROCEED FILLING IN 10 FOOT LIFTS FROM EAST TO WEST.
6. PROVIDE TEMPORARY CHANNEL BETWEEN CELL 4 COMPACTED SOIL LAYER AND WASTE SO THAT ANY STORMWATER IN CONTACT WITH WASTE WILL DRAIN TO SUMP RISER PIPE.
7. LEAVE SUMP RISER PIPE AREA FREE FROM WASTE UNTIL FINAL CELL 4 ELEVATIONS ARE ACHIEVED.
8. REMOVE SUMP RISER PIPE AND COVER SUMP AREA WITH STONE, GEOTEXTILE, AND OPERATIONAL COVER AS SHOWN ON DRAWING CP-5.
9. PROCEED LANDFILLING OVER SUMP AREA.
10. PLACE 18" COMPACTED SOIL LAYER ON SOUTHERN SLOPE.
11. EXTEND PD-51 AND TEMPORARY SLOPE DRAINS TO DIRECT STORMWATER OFF BENCHES TO THE DROP INLETS.
12. THE SLOPE OF THE WORKING FACE OF THE WASTE SHOULD BE NO STEEPER THAN 3H:1V.

© CHAS. H. SELLS, INC. ALL RIGHTS ARE RESERVED. ANY POSSESSION, REPRODUCTION OR OTHER USE OF THIS DOCUMENT WITHOUT PRIOR PERMISSION FROM CHAS. H. SELLS, INC. IS EXPRESSLY PROHIBITED.

CHAS. H. SELLS, INC.
Consulting Engineers, Surveyors & Photogrammetrists
128 Overhill Drive
Suite 105
Mooresville, NC 28117
Tel: 704-662-0100
Fax: 704-662-0101
www.chashsells.com

NORTH CAROLINA PROFESSIONAL ENGINEER SEAL 17582 DAN E. BREWER 8/2/06

BELEWS CREEK STEAM STATION
FGD RESIDUE LANDFILL

STOKES COUNTY, NORTH CAROLINA

REVISIONS		
2	8/2/06	Duke Comments
1	4/18/06	Issued for Revised CPA
0	9/30/05	Issued for CPA

PROJECT #: 046119 DATE: 9/30/05

DRAWN BY: DB CHECKED BY: DB

TITLE

PHASING DIAGRAM

SHEET OP-4

P:\LDD\projects\2004\046119 Belews Creek Steam Station\dwg\Issued For Construction 7-10-06\046119Master - Issued For Construction - July 10.dwg, OP-4 PHASE, gleaser

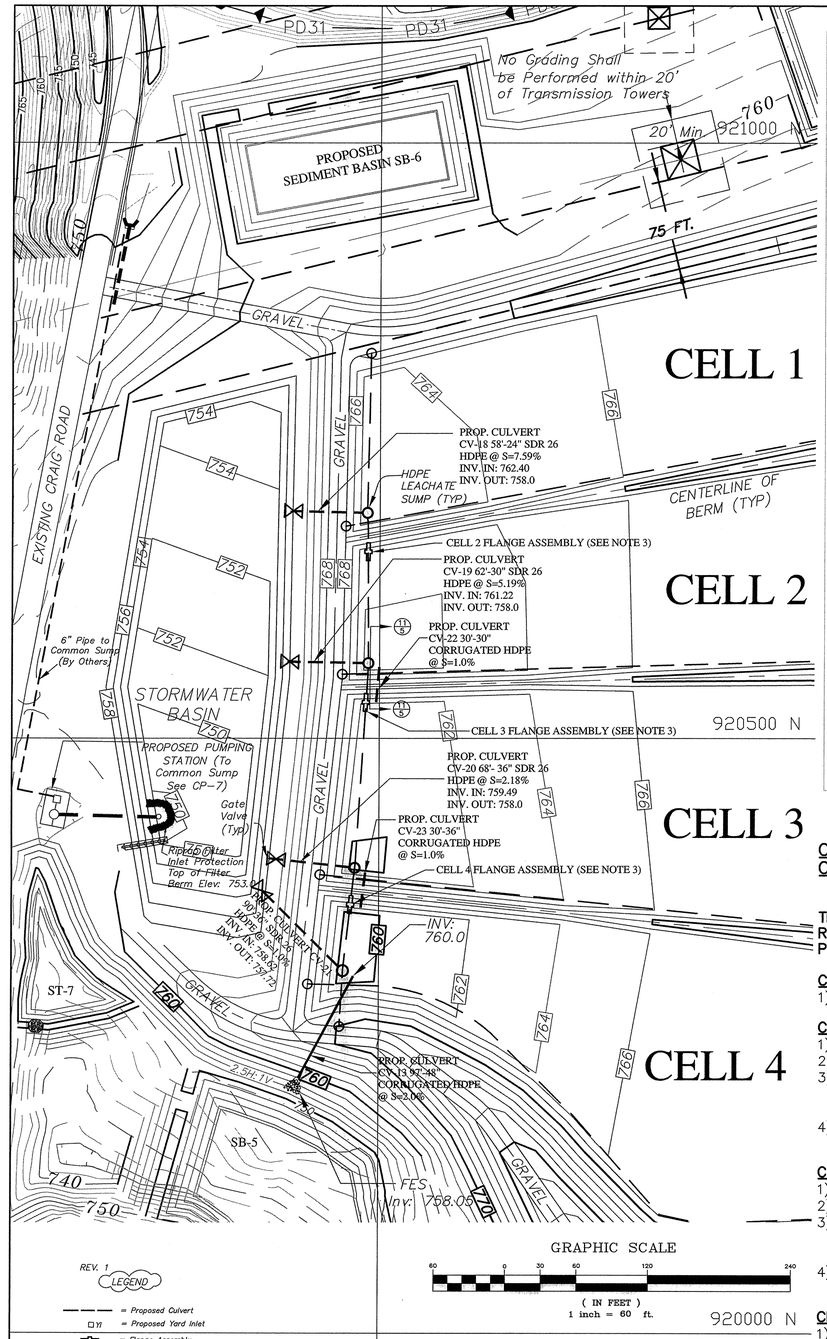

REV. 1

LEGEND

- = Proposed Culvert
- = Proposed Yard Inlet
- = Flange Assembly
- A-1 = Riprap Outlet Protection Apron
- 640 = Existing Grade Contour
- 640 = Proposed Finished Contour
- FES = Flared End Section
- BG-4 = Temporary Groundwater Monitoring Well
- TD = Temporary Diversion Channel
- PD = Permanent Diversion Channel
- ST-1 = Temporary Sediment Trap
- SB-1 = Temporary Sediment Basin
- = Temporary Sediment Fence
- = Proposed Guard Rail
- = Limits of Construction
- = Inlet Protection
- SD-6 = Slope Drain
- = Ring Dam
- = Rock Check Dam

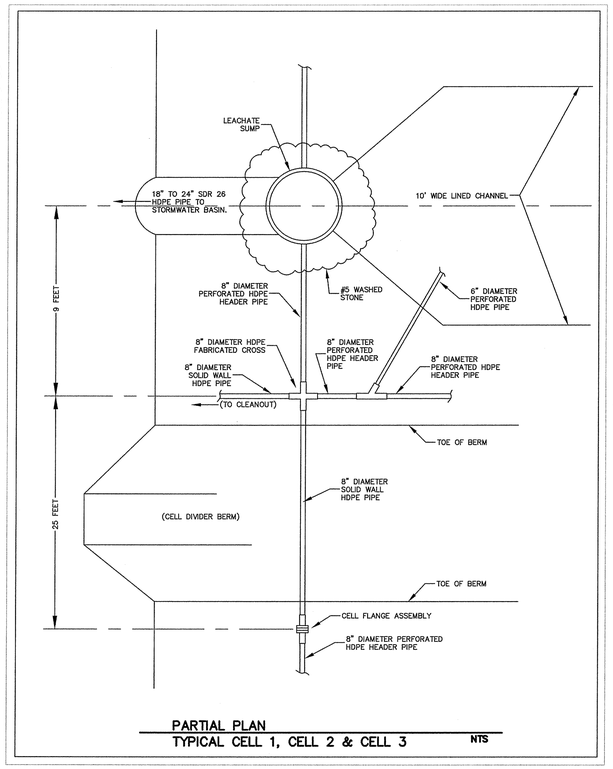

PARTIAL PLAN
TYPICAL CELL 1, CELL 2 & CELL 3 NTS

CELL OPERATIONS – STORMWATER PIPING AND LEACHATE COLLECTION AND REMOVAL SYSTEM

THE FOLLOWING OPERATIONS SHALL BE PERFORMED IN ORDER TO PROPERLY ROUTE THE STORMWATER AND LEACHATE. THESE OPERATIONS SHALL BE PERFORMED PRIOR TO PLACEMENT OF WASTE IN A CELL.

CELL 1 INSTRUCTIONS:

1) Ensure gate valve at downstream end of CV–18 is open.

CELL 2 INSTRUCTIONS:

1) Ensure gate valve at end of CV–19 is in Open position.
2) Abandon CV–22 by grouting 5' from upstream end.
3) Remove 8" dia. Blind Flange at Cell 2 Flange Assembly and replace with fabricated 8" HDPE flange (modified to match inside diameter of 8" SDR 17 HDPE pipe). Replace #57 stone and geotextile over flange assembly.
4) Convert Cell 1 Active Leachate Collection Sump to Inactive Leachate Collection Sump.

CELL 3 INSTRUCTIONS:

1) Ensure gate valve at end of CV–20 is in Open position.
2) Abandon CV–23 by grouting 5' from upstream end.
3) Remove 8" dia. Blind Flange at Cell 3 Flange Assembly and replace with fabricated 8" HDPE flange (modified to match inside diameter of 8" SDR 17 HDPE pipe). Replace #57 stone and geotextile over flange assembly.
4) Convert Cell 2 Active Leachate Collection Sump to Inactive Leachate Collection Sump.

CELL 4 INSTRUCTIONS:

1) Ensure gate valve at end of CV–21 is in Open position.
2) Abandon CV–13 by grouting 5' from upstream end; install 60 mil HDPE patch over inlet.
3) Remove 8" dia. Blind Flange at Cell 4 Flange Assembly and replace with fabricated 8" HDPE flange (modified to match inside diameter of 8" SDR 17 HDPE pipe). Replace #57 stone and geotextile over flange assembly.
4) Convert Cell 3 Active Leachate Collection Sump to Inactive Leachate Collection Sump.
5) Prior to placement of waste over Cell 4 Leachate Sump, convert to Inactive Leachate Collection Sump.

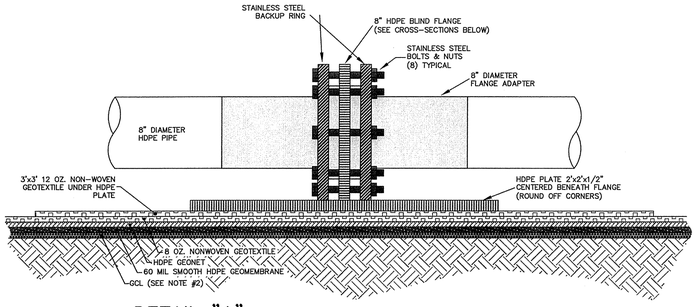

DETAIL "A" TYPICAL CELL FLANGE ASSEMBLY NTS

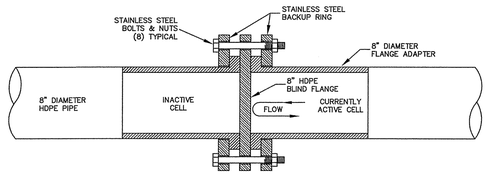

TYPICAL CROSS–SECTION DETAIL FOR BLIND FLANGE NTS

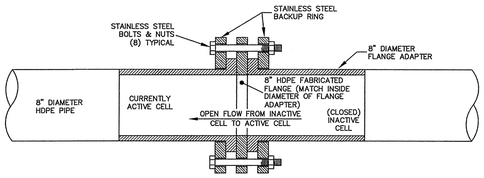

TYPICAL CROSS–SECTION DETAIL FOR FABRICATED FLANGE NTS

Instructions for Abandonment of Culvert CV–13.

1) Cut barrel of pipe at 12 inches from Leachate Sump Riser.
2) Install HDPE pipe cap on 12–inch stub to Leachate Sump Riser by double –butt fusion welding.
3) Cut and remove HDPE boot around barrel of pipe to expose concrete collar around barrel.
4) Cut HDPE pipe at or below concrete surface. Grind end of pipe flush with concrete surface.
5) Grout first 5 ft. of barrel.
6) Install stitch reinforced GCL (Bentomat DN or equivalent) patch over grouted pipe and concrete collar. Place a layer of granular bentonite over concrete collar and grouted pipe prior to installation of GCL patch.
7) Ensure a minimum of 12–inch overlap between GCL patch and the existing GCL on the side slope.
8) Install 60 mil textured HDPE patch over GCL patch. Patch must be circular and provide a minimum of 6–inch overlap to existing HDPE geomembrane.
9) HDPE patch should be installed and tested in accordance with Technical Specification Section 4.3.7.
10) Prepare report documenting process and retain in operating record.

© CHAS. H. SELLS, INC. ALL RIGHTS ARE RESERVED. ANY POSSESSION, REPRODUCTION OR OTHER USE OF THIS DOCUMENT WITHOUT PRIOR PERMISSION FROM CHAS. H. SELLS, INC., IS EXPRESSLY PROHIBITED.

CHAS. H. SELLS, INC.
Consulting Engineers, Surveyors & Photogrammetrists
128 Overhill Drive
Suite 105
Mooresville, NC 28117
Tel: 704–662–0100
Fax: 704–662–0101
www.chashsells.com

NORTH CAROLINA PROFESSIONAL ENGINEER SEAL 27582 DAN E. BREWER
3/20/12

BELEWS CREEK STEAM STATION
FGD RESIDUE LANDFILL
STOKES COUNTY, NORTH CAROLINA

REVISIONS

1	3/19/12	Rev. penetration abandonment notes
0	4/18/06	Issued for CPA

PROJECT #: 046119 DATE: 4/18/06
DRAWN BY: DC CHECKED BY: DB

TITLE
Cell Operations - Leachate Collection And Removal System

SHEET OP-5

Appendix III

Closure/Post-Closure Plan

1. INTRODUCTION

1.1 Introduction

The following Closure and Post-Closure Plan was prepared for Belews Creek Steam Station (BCSS) – Flue Gas Desulfurization (FGD) Residue Landfill. This plan was prepared in accordance with Title 15A Subchapter 13B of the North Carolina Administrative Code (NCAC). Specifically, this plan was prepared to meet the requirements of the .0503(2) and .0504(2) and 0.0505 and substantive requirements of Rules .1627-.1629 present requirements for closure and post- closure of Municipal Solid Waste (MSW) Landfills. As stated, these rules apply to MSW units. The proposed unit will be a FGD Residue and coal combustion products landfill, and therefore some of the requirements of Rules .1627-.1629 do not apply. The information contained in this plan will be used to assist Duke Energy Carolinas, LLC (Duke Energy) in the closure of active waste units and the maintenance and monitoring required during the post-closure care period.

1.2 Project Information

The BCSS FGD Landfill is owned and operated by Duke Energy Carolinas, LLC (Duke). The landfill is located in Stokes County, North Carolina on Duke property, south of the Belews Creek Steam Plant, between the east and west arms of Belews Creek Lake near Walnut Cove.

The purpose of the Closure/Post-Closure Plan is to outline the sequence for closing the landfill phase and the post-closure maintenance activities for each phase. Closure is designed to minimize the need for long term maintenance and to control the post-closure release of contaminants. Closure activities may be revised as appropriate for materials, specifications, technology advances or changes in regulations at that time.

2. CLOSURE PLAN

The cover system has been designed to reduce infiltration into the landfill and to resist erosion. The proposed cover system will incorporate a number of components which are described in the following sections.

2.1 Cover System

The proposed final cover system will consist of the following from top to bottom and will be placed over interim cover soils:

- a 6-inch thick vegetated erosion layer;
- a 18-inch thick soil barrier;
- a geocomposite drainage layer;
- a 40-mil thick double-sided textured linear low density polyethylene (LLDPE) geomembrane;
- a geocomposite gas collection layer; and
- existing intermediate soil cover.

2.1.1 Erosion Layer

The erosion layer will reduce erosion of the cover system, protect the soil barrier from root penetration, and will consist of 6 inches of soil capable of sustaining native plant growth.

2.1.2 Soil Barrier

In concert with the underlying geocomposite drainage layer and geomembrane, the soil barrier will help minimize infiltration through to the waste and protect the liner.

2.1.3 Geocomposite Drainage Layer

The geocomposite drainage layer will promote cover system stability by collecting and routing water that infiltrates the soil barrier to the perimeter surface water conveyance measures.

2.1.4 Geomembrane

As an additional measure to prevent infiltration through the cover system and into the waste, a geomembrane will be placed directly over the geocomposite gas collection layer.

2.1.5 Geocomposite Gas Collection Layer

The geocomposite gas collection layer will be placed directly over the interim cover of the proposed landfill and will provide a pathway for accumulated gas to move laterally to the gas vents.

2.1.6 Intermediate Cover

A thick layer of soil will be placed on top of the waste once final grades are reached. This intermediate soil layer will serve as the base for the geocomposite gas collection layer.

2.2 Gas Venting System

Waste will consist of flue gas desulfurization (FGD) residue and coal combustion residuals including fly ash, bottom ash, and mill rejects generated at the Belews Creek Steam Station. The majority of the waste stream will consist of FGD gypsum and ash. Based on the inorganic nature of the waste, methane will not be generated; also, it is not anticipated that hydrogen sulfide gas will be generated or that odor will be an issue. Therefore, Duke Energy does not propose monitoring for landfill gas nor providing landfill gas management measures until the final cover is installed.

In the event that hydrogen sulfide gases are detected during landfill operations, appropriate actions will be taken. In the event that gases are regularly detected during active landfill operations, the final closure and post-closure plan will be developed to address the gas. A landfill passive gas venting system is provided as part of the engineered cover system. Once the landfill is capped, no monitoring for hydrogen sulfide gas will be necessary.

2.3 Stormwater Management Systems

The proposed landfill is designed with a network of various stormwater controls and conveyances to manage stormwater during active operations, over interim cover soils, and upon final closure. Upon landfill closure, stormwater will be collected and conveyed through a network of ditches, berms, and down-drain pipes to the perimeter surface water management system. Plans and details illustrating the stormwater management system are provided in the Closure Plan Drawings.

2.4 Largest Area Requiring Cover System

The Phase 1 permitted area of 22.6 acres is the largest area that will need to be capped.

2.5 Estimated Maximum Waste Inventory

The proposed landfill design provides approximately 1,500,000 cubic yards of airspace available for waste placement. Using an assumed in-place waste density of 84 lb/ft^3, the available dry tonnage of waste to be placed in the landfill is estimated to be on the order of 1,701,000 tons.

2.6 Closure Schedule

Following the completion of waste placement, a final cover system will be constructed. The primary purpose of a final cover system is to minimize infiltration of stormwater into the waste, thus limiting generation of leachate. The proposed final cover system cross section is presented in the Closure Plan Drawings.

Final closure of the landfill will commence when final design grades are achieved, Duke Energy declares that no more waste will be accepted, or as directed by the North Carolina Department of Environment and Natural Resources (NCDENR) Division of Waste Management – Solid Waste Section (the Division). Duke Energy may elect to close the landfill incrementally during landfill operations once an area large enough to warrant cover system construction has reached final grades. Prior to beginning closure of the proposed landfill, the Owner or Operator shall notify the Division that a notice of intent to close the landfill has been placed in the operating record. Closure activities for the landfill shall begin no later than 30 days after final receipt of waste unless otherwise approved by the Division or, if the landfill has remaining capacity and there is a reasonable likelihood that the landfill will receive additional wastes, no later than one year after the most recent receipt of wastes. Extensions beyond the one-year deadline for beginning closure may be granted by the Division if the Owner or Operator demonstrates that the landfill has the capacity to receive additional wastes and the Owner or Operator has taken and will continue to take the steps necessary to prevent threats to human health and the environment from the unclosed landfill.

The final cover system will be finished within 180 days following the beginning of closure activities unless otherwise approved by the Division. Extensions of the closure period may be granted by the Division if the Owner or Operator demonstrates that closure will, of necessity, take longer than 180 days and they have taken and will continue to take the necessary steps to prevent threats to human health and the environment from the unclosed landfill unit. The final cover system for the closed phase will be certified by a professional engineer as being completed. Duke Energy shall record a notation on the deed to the landfill property stating

that the property has been used as a landfill and its use is restricted under the Closure/Post-Closure Plan approved by the Division. The Division will be notified by Duke Energy of the closure completion, certification, deed notation, and placement of these records into the landfill's operating record.

Following cover system construction, the landfill will be vegetated with grass and maintained. A final cover will be established over the landfill unit being closed. The maximum waste-filled area of the proposed landfill that would require closure operations at any one time is approximately 22.6 acres. If the landfill is closed prior to reaching capacity, revised closure drawings will be submitted to the Division for approval.

3. POST-CLOSURE PLAN

The Post-Closure Plan outlines the monitoring and maintenance activities intended to maintain cover system integrity during the post-closure period, which is proposed to be 30 years. During the post-closure period the landfill cover system and related facilities must be monitored and maintained.

3.1 Maintenance Activities

Maintenance activities will be required for the final cover system to remain functional. The vegetative cover shall be mowed a minimum of once a year. The vegetative cover shall be amended and fertilized as needed to maintain healthy vegetation. Depressions in the cover that pond water or otherwise impair the function of the final cover will be filled and/or regraded. Areas subject to regrading will be revegetated. Animal burrows and eroded areas should be filled in with compacted soil and reseeded. If vegetative cover is not adequate in a particular area, fertilizer should be applied and the area reseeded in order to re-establish vegetation. Insecticides may be used to eliminate insect populations that are detrimental to the vegetation. Any deep-rooted or woody vegetation that may have established itself on the cover soil will be removed. In addition to maintenance of the vegetative cover, any items noted as requiring maintenance in Section 3.2 Monitoring Activities would also require maintenance.

3.2 Monitoring Activities

Post-closure monitoring will be conducted quarterly for the first two years and semi-annually thereafter for the remainder of the post-closure period. The following cover system and landfill components will be monitored:

- security measures such as fences, gates, locks, and other measures that control site and facility access;
- surface water management systems for signs of erosion, sedimentation, and condition;
- cover system for signs of erosion;
- cover system for evidence of settlement or subsidence;
- condition and/or presence of vegetation (for distressed or dying vegetation or woody vegetation with potential to penetrate the low permeability barrier);
- condition of the groundwater monitoring wells and gas venting system

Post-closure monitoring will be documented on post-closure monitoring forms. Post-Closure Monitoring Form sheets are provided in Appendix I. Completed post-closure monitoring forms will be maintained in the facility operating record.

3.2.1 Groundwater Monitoring

The Groundwater Monitoring Plan will be continued semi-annually (or as required) after final closure. The results of the analytical testing will be submitted to NCDENR as directed in the Groundwater Monitoring Plan.

3.2.2 Surface Water Monitoring

Surface water monitoring of the downgradient tributaries to Belews Lake will be continued after closure as required by the NCDENR Division of Waste Management. Surface water discharged from the sediment basins will be sampled and analyzed if required by the NPDES stormwater permit.

3.3 Facility Contact

The post-closure maintenance of the landfill will be the responsibility of Duke Energy. Correspondence should be directed to:

On-Site Environmental Professional
Duke Energy Carolinas, LLC – Belews Creek Steam Station
3195 Pine Hall Road, Belews Creek, North Carolina 27009
(336) 445-0746
Facility Contact: Station Sponsor for Landfill Operations or Environmental Professional

The landfill physical address and office information are the same as above.

3.4 Post-Closure Planned Use

Following closure operations, the landfill will be closed and vegetation will be planted and maintained. Duke Energy will maintain control of, and limit access to the facility. No post-closure use is proposed at this time. In the event the post-closure planned use is changed, Duke Energy shall obtain prior approval from NCDENR.

3.5 Certification

Consistent with regulations, the end of the closure-post closure period must be certified by a registered professional engineer. To accomplish certification over the required 30-year duration, a registered professional engineer will prepare annual certifications. The annual certifications will document that the cover system has been monitored and maintained in accordance with the Post-Closure Plan. The annual certifications shall be based on observations and results documented on regular post-closure monitoring reports, maintenance records, and compliance monitoring reports maintained in the Operating Record.

BELEWS CREEK STEAM STATION
FGD RESIDUE LANDFILL

STOKES COUNTY, NORTH CAROLINA

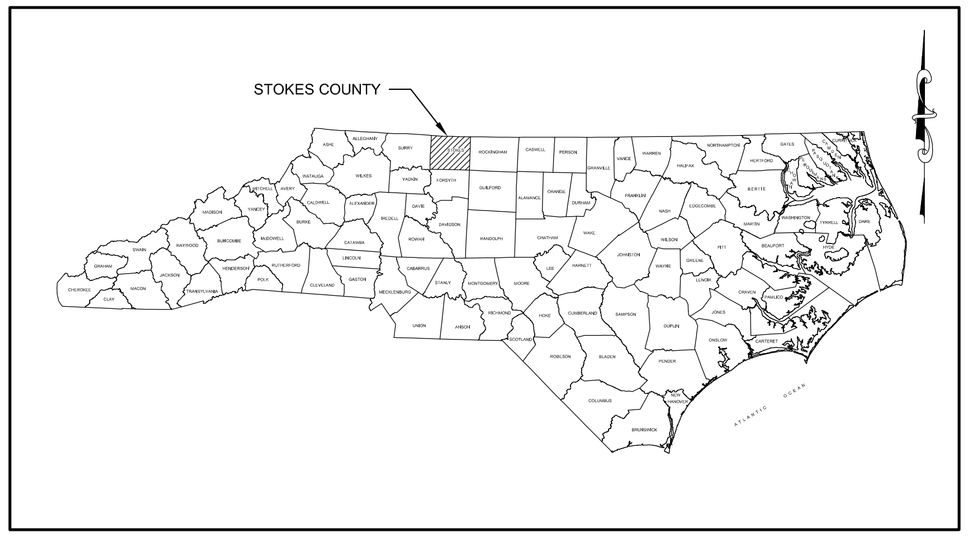

STATE

COUNTY LOCATION MAP

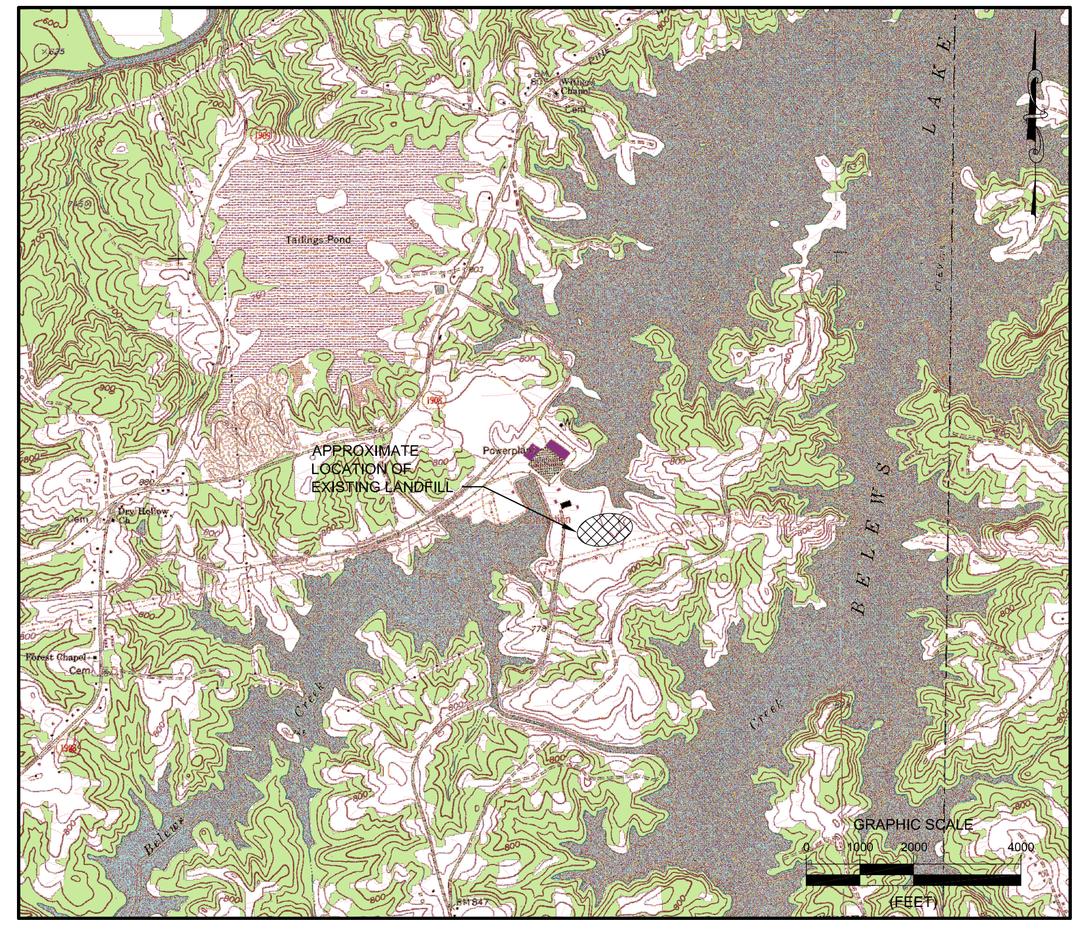

VICINITY MAP

DRAWING INDEX

SHEET	DESCRIPTION
CP-T	TITLE SHEET
CP-L	LEGEND AND GENERAL NOTES
CP-01	FINAL CLOSURE PLAN
CP-02	CLOSURE DETAILS
CP-03	CLOSURE DETAILS

OWNER INFORMATION

PREPARED FOR: DUKE ENERGY CAROLINAS, LLC
ADDRESS: 526 SOUTH CHURCH ST.
CHARLOTTE, NC 28202

CONTACT: STATION SPONSOR FOR LANDFILL OPERATIONS
OR ENVIRONMENTAL PROFESSIONAL
(336) 445-0746

PROPERTY INFORMATION

ADDRESS: 3195 PINE HALL ROAD
BELEWS CREEK, NC 27009

NC FACILITY ID: 8505

ACREAGE: 264.8

CLOSURE PLAN
MAY 11, 2012

DATE	REVISIONS AND RECORD OF ISSUE	NO	BY	CK	APP

NORTH CAROLINA PROFESSIONAL ENGINEER SEAL 031205 MARTIN A. STEWART
5/11/12

DESIGNED MAS
DRAWN RWH
CHECKED EEA
APPROVED MAS
DATE 05/11/12

© 2012 Joyce Engineering, Inc.
All rights reserved.

JOYCE ENGINEERING
2211 W. MEADOWVIEW ROAD
GREENSBORO, NC 27407
PHONE: (336) 323-0092
NC CORP LIC: C-0782

BELEWS CREEK STEAM STATION, FGD RESIDUE LANDFILL
STOKES COUNTY, NORTH CAROLINA

TITLE SHEET

PROJECT NO.
845.1202.11.01

SCALE
NO SCALE

DRAWING NO.
CP-T

L:\Duke Energy\Belews Creek\FGD\MODIFICATION 0412\SHEET SET\TITLE.dwg Layout=Layout1

CONVENTIONAL SYMBOLS AND GENERAL NOTES

ENVIRONMENTAL MONITORING FEATURES

MW-X	EXISTING GROUNDWATER MONITORING WELL
MW-#	PROPOSED GROUNDWATER MONITORING WELL
MW-OW-#	EXISTING OBSERVATION WELL
MW-OW-X	PROPOSED OBSERVATION WELL
NES-OW-X	EXISTING NES WELL
NES-OW-#	PROPOSED NES WELL
MW-PW-X	EXISTING PERFORMANCE WELL
MW-PW-#	PROPOSED PERFORMANCE WELL
MW-X	EXISTING SENTINEL WELL
MW-#	PROPOSED SENTINEL WELL
PZ-#	WETLANDS PIEZOMETER
PZ-X	PIEZOMETER
SMP-X	SURFACE WATER MONITORING POINT
LMP-1	LEACHATE MONITORING POINT
B-X	BORE HOLE LOCATION
C-X	CORING LOCATION
SS-X	SOIL SAMPLING LOCATION
TP-X	TEST PIT LOCATION
W	WELL LOCATION
S-X	SPRINGHEAD LOCATION

LANDFILL GAS FEATURES

EW-X	EXISTING EXTRACTION WELL
EW-#	PROPOSED EXTRACTION WELL
GW-X	EXISTING LEACHATE CLEAN-OUT GAS EXTRACTION WELL
GW-#	PROPOSED LEACHATE CLEAN-OUT GAS EXTRACTION WELL
GP-X	GAS PROBE
GV-X	EXISTING GAS VENT
GV-#	PROPOSED GAS VENT
J	CONDENSATE TRAP
CO	CLEAN-OUT
V21	VALVE DESIGNATION (SEE SCHEDULE)

SURVEY FEATURES

BM	BENCHMARK
CP	CONTROL POINT
	PROPERTY LINE
	EASEMENT
R/W	RIGHT OF WAY
X	FENCE LINE
	RAILROAD
	GUARDRAIL
	RESOURCE PROTECTION AREA

UTILITIES

	UTILITY POLE
	HYDRANT
	LIGHT POLE
	TANK (SIZE VARIES)
	TRANSFORMER
M	MANHOLE
	CLEANOUT
	VALVE
OHE	OVERHEAD ELECTRIC
UGE	UNDERGROUND ELECTRIC
OHT	OVERHEAD TELEPHONE
UGT	UNDERGROUND TELEPHONE
FM	LEACHATE FORCE MAIN
DCFM	DUAL CONTAINED LEACHATE FORCE MAIN
SS	SANITARY SEWER
PS	PROCESS SEWER
G	LANDFILL GAS LINE
UGG	NATURAL GAS LINE
W	POTABLE WATER
	SOLID PIPE (TYPE NOTED)
	PERFORATED PIPE (TYPE NOTED)
	CULVERT (SIZE NOTED)

LANDFILL AND ROAD FEATURES

	PAVED ROAD
	GRAVEL/DIRT ROAD
	EDGE OF PAVEMENT
	LIMIT OF WASTE/EDGE OF LINER
	FACILITY BOUNDARY/CELL LIMITS/PHASE LIMITS

BUILDINGS AND STRUCTURES

	BUILDING
	DAM
	FOUNDATION

HYDROLOGY

	APPROXIMATE 100 YEAR FLOOD PLAIN
	DITCH FLOW
	STREAM OR RIVER

VEGETATION

	SINGLE TREE
	TREE LINE
	SHRUB

EROSION AND SEDIMENT CONTROL FEATURES

SF	SILT FENCE
IP	INLET PROTECTION
	OUTLET PROTECTION (SIZE VARIES)
	DIVERSION BERM

TOPOGRAPHICAL FEATURES

100	EXISTING 10' TOPO CONTOUR
	EXISTING 2' TOPO CONTOUR
100	PROPOSED 10' TOPO CONTOUR
	PROPOSED 2' TOPO CONTOUR
100	GROUNDWATER SURFACE CONTOUR (FT ABOVE MEAN SEA LEVEL)
100	BEDROCK SURFACE CONTOUR (FT ABOVE MEAN SEA LEVEL)
100.00	SPOT ELEVATION
X	GRADE BREAK AND RUNOFF FLOW DIRECTION

HATCHING

	WETLANDS
	RIPRAP
	WASHED STONE
	BUFFER AREA
	PROPOSED ROAD
	COMPACTED BACKFILL

SURVEY NOTES:

1. TOPOGRAPHIC CONTOUR INTERVAL = 2 FEET, UNLESS INDICATED OTHERWISE.
2. ON-SITE TOPOGRAPHY PROVIDED BY OWNER.

GENERAL NOTES:

1. CONTRACTOR SHALL BE SOLELY RESPONSIBLE FOR INITIATING, MAINTAINING, AND SUPERVISING ALL SAFETY PRECAUTIONS AND PROGRAMS IN CONNECTION WITH THE WORK. CONTRACTOR SHALL COMPLY WITH ALL APPLICABLE LAWS AND REGULATIONS RELATING TO THE SAFETY OF PERSONS OR PROPERTY, AND TO THE PROTECTION OF PERSONS OR PROPERTY FROM DAMAGE, INJURY, OR LOSS, AND SHALL ERECT AND MAINTAIN ALL NECESSARY SAFEGUARDS FOR SUCH SAFETY AND PROTECTION.

GENERAL EROSION AND SEDIMENT CONTROL NOTES:

1. UNLESS OTHERWISE INDICATED, ALL VEGETATIVE AND STRUCTURAL EROSION AND SEDIMENT CONTROL PRACTICES WILL BE CONSTRUCTED AND MAINTAINED ACCORDING TO MINIMUM STANDARDS AND SPECIFICATIONS OF THE NC EROSION AND SEDIMENT CONTROL HANDBOOK AND NC REGULATIONS.
2. ALL DISTURBED AREAS ARE TO DRAIN TO APPROVED SEDIMENT CONTROL MEASURES AT ALL TIMES DURING LAND DISTURBING ACTIVITIES AND DURING SITE DEVELOPMENT UNTIL FINAL STABILIZATION IS ACHIEVED.
3. THE CONTRACTOR SHALL INSPECT ALL EROSION CONTROL MEASURES PERIODICALLY AND AFTER EACH RUNOFF-PRODUCING RAINFALL EVENT. ANY NECESSARY REPAIRS OR CLEANUP TO MAINTAIN THE EFFECTIVENESS OF THE EROSION CONTROL DEVICES SHALL BE MADE IMMEDIATELY.
4. PERMANENT OR TEMPORARY SOIL STABILIZATION SHALL BE APPLIED TO DENUDED AREAS WITHIN SEVEN DAYS AFTER FINAL GRADE IS REACHED ON ANY PORTION OF THE SITE. TEMPORARY SOIL STABILIZATION SHALL BE APPLIED WITHIN SEVEN DAYS TO DENUDED AREAS THAT MAY NOT BE A FINAL GRADE BUT WILL REMAIN DORMANT (UNDISTURBED) FOR LONGER THAN 30 DAYS. PERMANENT STABILIZATION SHALL BE APPLIED TO AREAS THAT ARE TO BE LEFT DORMANT FOR MORE THAN ONE YEAR.

DATE	REVISIONS AND RECORD OF ISSUE	NO	BY	CK	APP

NORTH CAROLINA PROFESSIONAL ENGINEER SEAL 037203 MARTIN A. STEWART II
5/11/12

DESIGNED MAS
DRAWN RWH
CHECKED EEA
APPROVED MAS
DATE 05/11/12

© 2012 Joyce Engineering, Inc. All rights reserved.

JOYCE ENGINEERING
2211 W. MEADOWVIEW ROAD
GREENSBORO, NC 27407
PHONE: (336) 323-0092
NC CORP LIC: C-0782

BELEWS CREEK STEAM STATION, FGD RESIDUE LANDFILL
STOKES COUNTY, NORTH CAROLINA

LEGEND AND GENERAL NOTES

PROJECT NO.
845.1202.11.01

SCALE
NO SCALE

DRAWING NO.
CP-L

L:\Duke Energy\Belews Creek\FGD\MODIFICATION 0412\SHEET SET\LEGEND.dwg Layout=Layout1

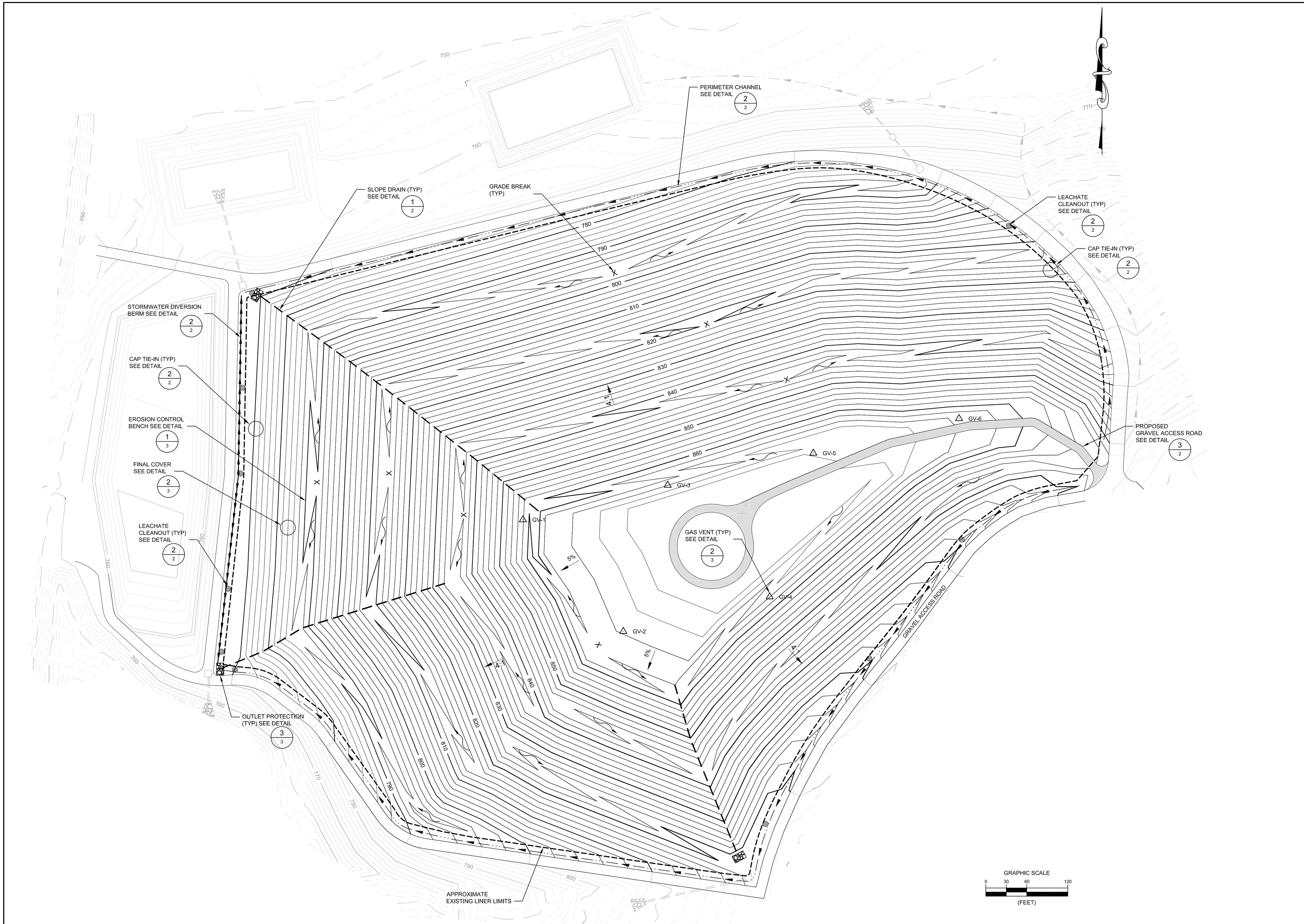

DATE	REVISIONS AND RECORD OF ISSUE	NO	BY	CK	APP

DESIGNED MAS
DRAWN RWH
CHECKED EEA
APPROVED MAS
DATE 05/11/12

© 2012 Joyce Engineering, Inc. All rights reserved.

JOYCE ENGINEERING
2211 W. MEADOWVIEW ROAD
GREENSBORO, NC 27407
PHONE: (336) 323-0992
NC CORP LIC: C-0782

BELEWS CREEK STEAM STATION, FGD RESIDUE LANDFILL
STOKES COUNTY, NORTH CAROLINA

FINAL CLOSURE PLAN

PROJECT NO.
845.1202.11.01

SCALE
AS SHOWN

DRAWING NO.
CP-1

L:\Duke Energy\Belews Creek\FGD\MODIFICATION 0412\SHEET SET\SHT 1 FINAL CLOSURE PLAN.dwg Layout=Layout1

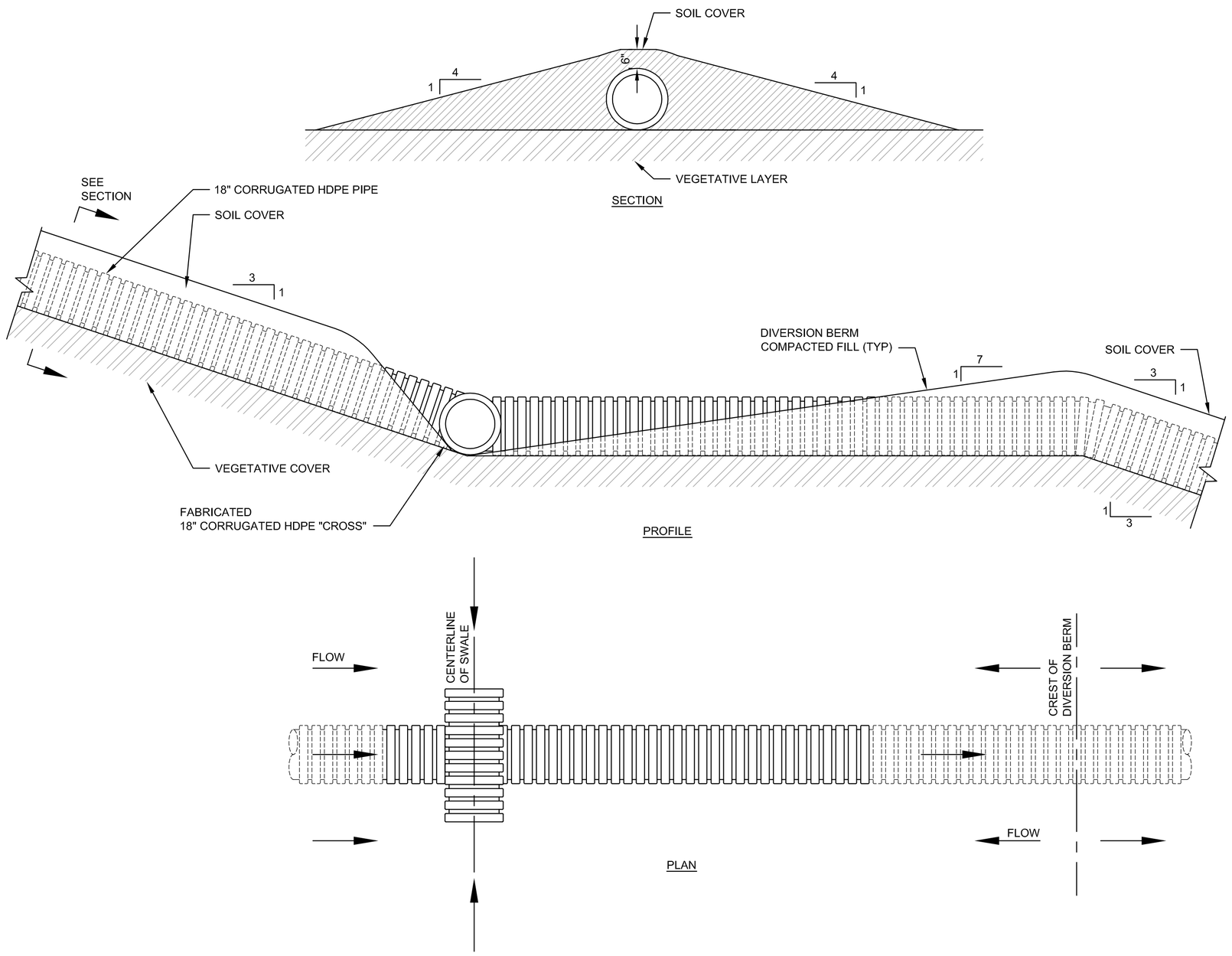

SLOPE DRAIN DETAIL (1)
N.T.S.

NOTES:
EXISTING LEACHATE HEADER PIPE ELBOW AND FLANGED END TO BE REMOVED AND PIPE EXTENDED AS SHOWN BELOW.

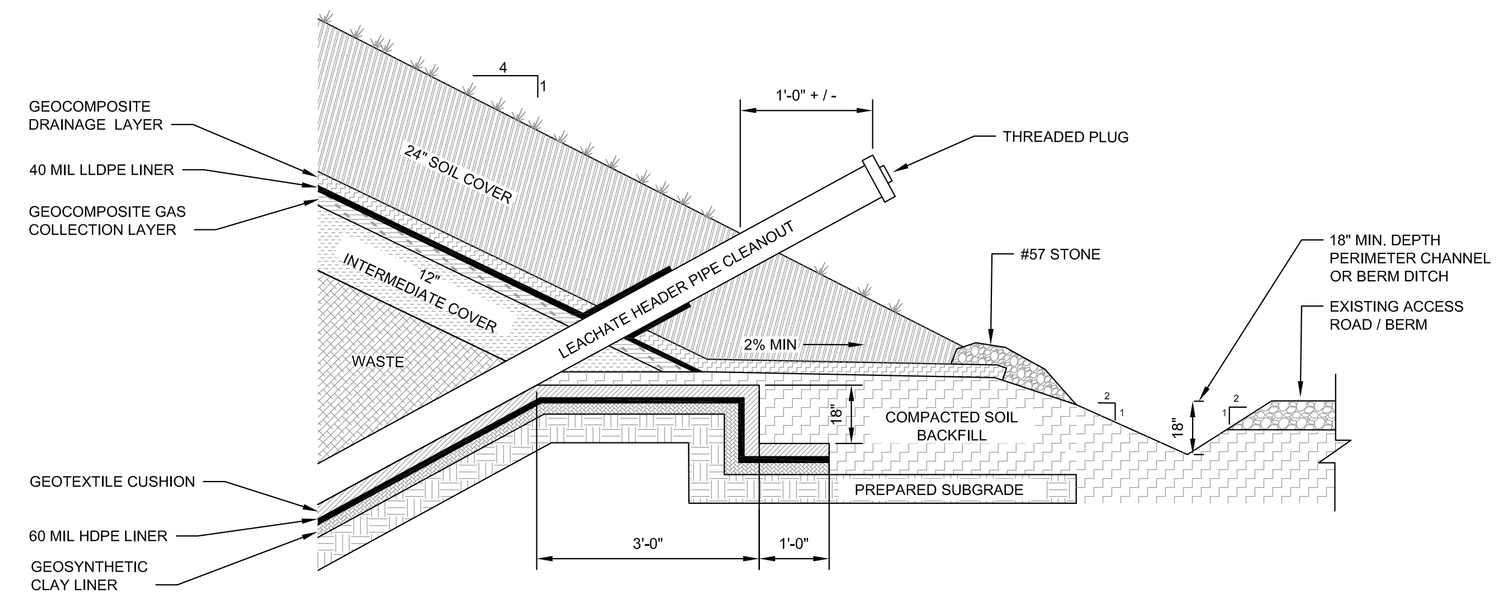

CAP TIE-IN AND SIDE SLOPE LINER (2)
N.T.S.

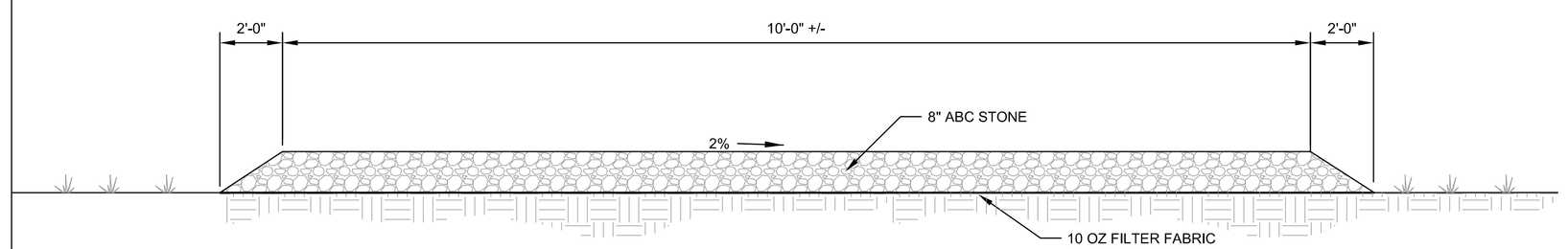

GRAVEL ACCESS ROAD DETAIL (3)
N.T.S.

DATE	REVISIONS AND RECORD OF ISSUE	NO	BY	CK	APP

DESIGNED MAS
DRAWN RWH
CHECKED EEA
APPROVED MAS
DATE 05/11/12

© 2012 Joyce Engineering, Inc. All rights reserved.

JOYCE ENGINEERING
2211 W. MEADOWVIEW ROAD
GREENSBORO, NC 27407
PHONE: (336) 323-0092
NC CORP LIC: C-0782

BELEWS CREEK STEAM STATION, FGD RESIDUE LANDFILL
STOKES COUNTY, NORTH CAROLINA

CLOSURE DETAILS

PROJECT NO.
845.1202.11.01

SCALE
AS SHOWN

DRAWING NO.
CP-2

L:\Duke Energy\Belews Creek\FGD\MODIFICATION 0412\SHEET SET\SHT 2 DETAILS.dwg Layout=sheet 2

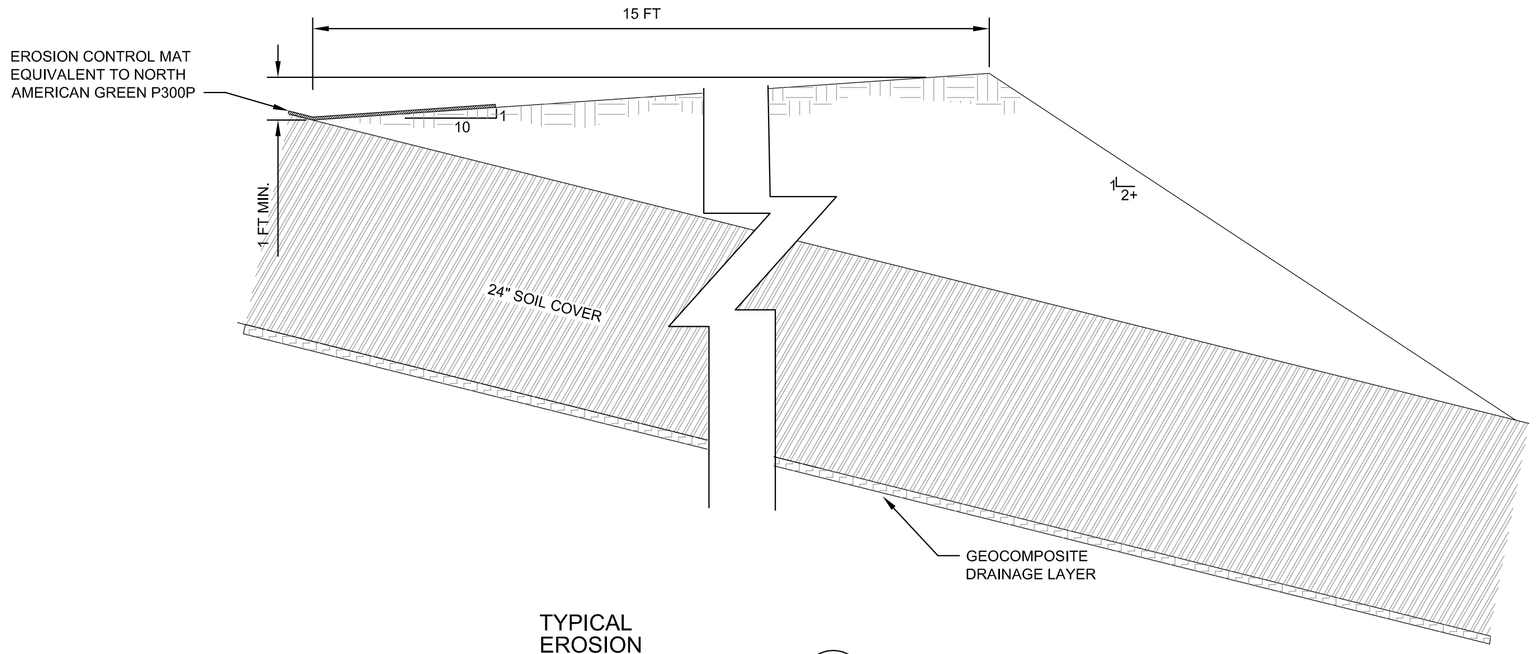

TYPICAL
EROSION
CONTROL BENCH
N.T.S.

1

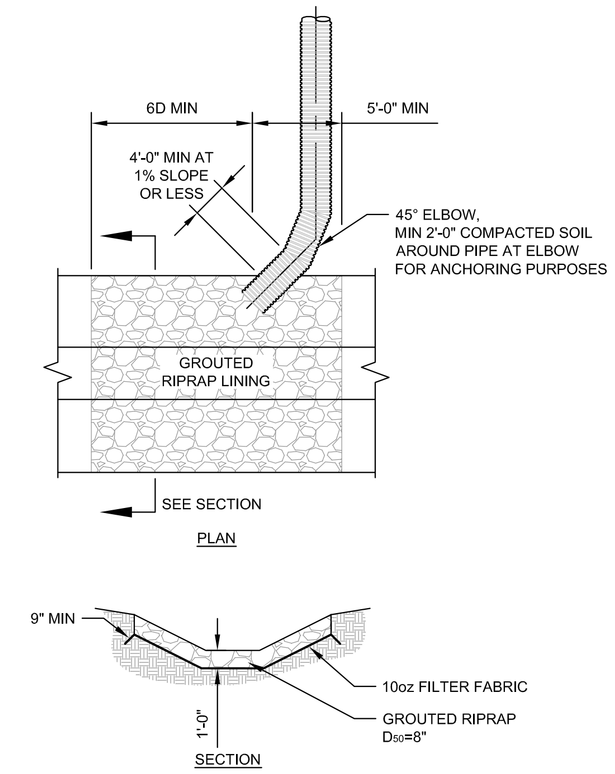

OUTPET PROTECTION
DETAIL - TYPE I
N.T.S.

3

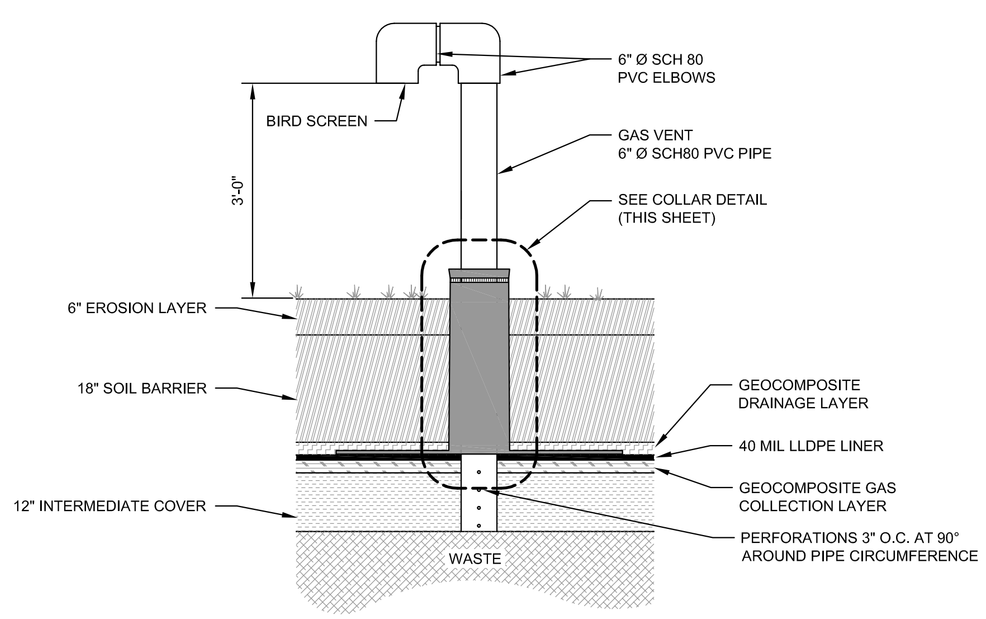

FINAL COVER
DETAIL
N.T.S.

2

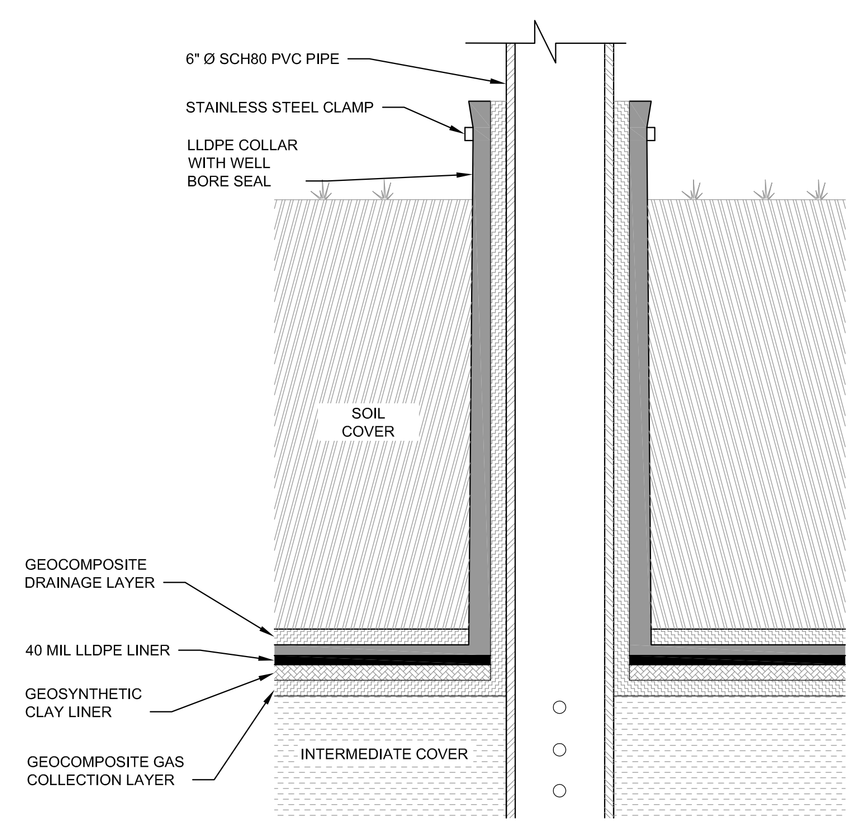

COLLAR DETAIL
N.T.S.

NO	BY	CK	APP

DATE	REVISIONS AND RECORD OF ISSUE

NORTH CAROLINA PROFESSIONAL SEAL 031208 ENGINEER MARTIN A. SHOWALTER 5/11/12

DESIGNED MAS
DRAWN RWH
CHECKED EEA
APPROVED MAS
DATE 05/11/12

© 2012 Joyce Engineering, Inc.
All rights reserved.

JOYCE ENGINEERING
2211 W. MEADOWVIEW ROAD
GREENSBORO, NC 27407
PHONE: (336) 323-0092
NC CORP LIC: C-0782

BELEWS CREEK STEAM STATION, FGD RESIDUE LANDFILL
STOKES COUNTY, NORTH CAROLINA

CLOSURE DETAILS

PROJECT NO.
845.1202.11.01

SCALE
AS SHOWN

DRAWING NO.
CP-3

L:\Duke Energy\Belews Creek\FGD\MODIFICATION 0412\SHEET SET\SHT 2 DETAILS.dwg Layoutsheet 3

QUARTERLY INSPECTION LOG Duke Energy FGD Residue Landfill Belews Creek, North Carolina	Inspector:_____ Date:_____

Component	Location	Description	Repair/ Cleanup?	Type of Corrective Action	Date to be completed

Opinion of Closure Cost:
FGD Residue Landfill
Belews Creek Steam Station
Duke Energy Carolinas, LLC

ITEM	UNIT	QUANTITY	UNIT COST	COST $
FINAL CAP SYSTEM- 22.6 ACRES (PHASE 1)				
Intermediate Cover (demo and fine grading)	acre	23	$4,500.00	$103,500
Geocomposite Gas Collection Layer	sf	984,456	$0.50	$492,228
Geomembrane (40 mil)	sf	984,456	$0.63	$620,207
Geonet Composite (Drainage Layer)	sf	984,456	$0.98	$964,767
Protective cover (18")	cy	54,692	$4.00	$218,768
Topsoil (6")	cy	18,231	$4.50	$82,040
			Subtotal	**$2,481,510**
SEDIMENTATION AND EROSION CONTROLS				
Diversion Berms				
Construction and lining	lf	6,800	$13.00	$88,400
Slope Drains				
Pipe and Installation	lf	1,200	$43.12	$51,744
Drainage Bench Inlet	each	3	$300.0	$900
Conveyance Channels				
Riprap Channels	lf	0	$57.50	$0
Grass-lined Channels	lf	0	$25.00	$0
Drainage Pipe	lf	0	$40.00	$0
Miscellaneous				
Outlet Protection (RipRap)	each	3	$10,000.00	$30,000
Silt Fence	lf	500	$3.60	$1,800
			Subtotal	**$172,844**
GAS CONTROLS (Vents)	each	6	$5,000.00	**$30,000**
VEGETATIVE COVER	acre	23	$2,000.00	**$46,000**
TOTAL OF ABOVE ITEMS				**$2,730,354**
MOBILIZATION / DEMOBILIZATION	(construction only)		5%	$136,518
ENGINEERING FEE	-	-	2%	$54,607
CQA	(cap only)	-	6%	$148,891
CONTINGENCY	-	-	10%	$273,035
ADMINISTRATION	lump sum	-	-	$2,500
CLOSURE CERTIFICATION	lump sum	-	-	$2,500
SURVEY AND DEED	acre	23	$1,400.00	$32,200
TOTAL CLOSURE COST (IN 2012 DOLLARS)				**$3,380,605**
Cost per acre (for 22.6 acres)				$149,584.29

Notes:
1. Costs are based on conceptual design and should be considered approximate.

Opinion of Post-Closure Care Costs:
FGD Residue Landfill
Belews Creek Steam Station
Duke Energy Carolinas, LLC

ITEM	UNIT	QUANTITY	UNIT COST	ANNUAL COST
INSPECTIONS/ RECORD KEEPING	per trip	4	$1,000	**$4,000**
ROUTINE MAINTENANCE				
Mowing	acre	22.6	$100	$2,260
Stormwater Structures	lump sum	1	$5,000	$5,000
Roads, Fencing, Gates, Signs, Etc.	lump sum	1	$3,000	$3,000
Leachate Collection and Storage	lump sum	1	$1,000	$1,000
Subtotal				**$11,260**
WELL MAINTENANCE				
Groundwater Wells	lump sum	1	$1,000	$1,000
Subtotal				**$1,000**
CAP REPAIR	lump sum	1	$7,500	**$7,500**
TOTAL OF ABOVE ITEMS				**$23,760**
ENGINEERING	-	-	5%	$1,188
CONTINGENCY	-	-	15%	$3,564
TOTAL ANNUAL POST-CLOSURE COST (IN 2012 DOLLARS)				**$28,512**
Cost Per Year Per Acre (for 22.6 acres)				**$1,262**
TOTAL 30-YEAR POST-CLOSURE COST (IN 2012 DOLLARS)				**$855,360**

Notes:
1. All costs include labor by a third party.
2. Cap repair assumes that five acres will require repair during the period.
3. Maintenance cost for groundwater wells assumes replacement of 10 wells during the period.

Opinion of Potential Assessment Corrective Action Costs:
FGD Residue Landfill
Belews Creek Steam Station
Duke Energy Carolinas, LLC

ITEM	UNIT	QUANTITY	UNIT COST	ANNUAL COST
MONITORING				
Groundwater/Surfacewater (semi-annually)				
Sampling	per trip	2	$4,000	$8,000
Analysis	per trip	2	$2,500	$5,000
Reporting	per trip	2	$2,500	$5,000
Surface Water (semi-annually)	per trip	2	$2,100	$4,200
Subtotal				**$22,200**
LEACHATE MONITORING	allowance	1	$3,600	**$3,600**
CORRECTIVE ACTION PLAN ACTIVITIES	per year	1	$36,000	**$36,000**
TOTAL OF ABOVE ITEMS				**$61,800**
ENGINEERING	-	-	3%	$1,854
CONTINGENCY	-	-	5%	$3,090
TOTAL ANNUAL PACA COST (IN 2012 DOLLARS)				**$66,744**
TOTAL 30-YEAR PACA COST (IN 2012 DOLLARS)				**$2,002,320**

Notes:
1. All costs include labor by a third party.
2. Water quality monitoring and leachate management costs are estimated.
3. It is assumed that gas monitoring will not be necessary for this site.

Appendix IV

Chimney Drain System

CHIMNEY DRAIN SYSTEM

The Flue Gas Desulfurization (FGD) landfill at the Belews Creek Steam Station receives primarily FGD materials as a byproduct of air quality emissions measures. This predominant waste stream presents a problem when managing leachate from this facility. A traditional landfill that accepts a wide array of wastes typically allows leachate to move through the waste mass to the floor of the cell for collection and removal from the landfill. In contrast, leachate does not flow through the FGD material, but is absorbed into the waste or flows across the surface to a perimeter collection system. This sheet flow, directed at the exterior slopes of the landfill, is difficult to control. Multiple interior drains will help contain the flow within the waste boundary and avoid contaminating traditional stormwater management facilities.

In order to better manage contact water, a chimney drain network has been designed to route leachate through the waste and out of the landfill through the existing leachate outfalls.

Chimney Drain Design

The intent of the chimney drain design is to produce an operationally manageable solution to safely handle contact water. The design uses readily available materials that can successfully be implemented by the landfill operator following an initial construction event to fabricate and install the trunk line systems.

The design utilizes the cell 3 and 4 sump outlets to remove leachate from the system via a 30 inch SDR 26 HDPE pipe. Material properties used in the design of this system are consistent with those used elsewhere in the design of the facility.

The 25 year storm event was used to estimate overall capacity for the system. As the landfill cells 1, 2 and 3 are already filled to approximately the 800 ft amsl elevation at the time of system installation, an appropriate runoff area was used to estimate overland flow to the system inlets.

Chimney Drain Construction

To install the trunkline pipes to the existing sump structures, an adequate sized hole will be cut in the existing perforated riser at or above the flowline of the outlet. The pipe will be extrusion welded around the diameter of the pipe on the interior and exterior of the riser with gussets on the exterior for strength. The pipe will be supported with #57 stone material or bottom ash until such time that the pipe can be laid upon the existing protective cover / FGD waste layer in the cell. The 30 inch pipe will be continuously welded to conform to the bottom

layer of the cell providing a minimum 1% grade to the system outlet. Three feet of cover soil or FGD material will be required to be placed over the pipe before traffic can cross the trunkline. Six 24-inch 'tee' sections will be installed at approximate locations as shown on the design drawings. Drain inlets 1, 2, 5 and 6 will transition from the SDR 26 HDPE immediately to a perforated, double wall corrugated HDPE pipe (ADS N-12 or equivalent). Inlets 3 and 4 will use SDR 26 HDPE vertical extensions until approximately 35 feet below the final grade surface before transitioning to the perforated pipe section.

Chimney Drain Operations

The initial section of N-12 pipe will be 5 feet long with perforations as shown on the design drawings. If the design year storm event occurs during this initial condition, the operator can expect the water to overtop the structure. Therefore, local depressions of up to 5 feet will be left around the drain inlets to prevent widespread ponding on the landfill. The pipe will be encased with a minimum of one foot of #57 drainage stone or bottom ash in order to maintain flow to pipe perforations. A grated inlet on top of the chimney drain will remain in place at all times at each drain to prevent large objects from entering the system.

The fill will be graded to serve up to 5 acres at each of 4 active drains. Once the fill progresses to the top of the grate inlet at any given drain, a perforated riser will be added in maximum 10 foot sections and a stone or bottom ash column maintained as fill is placed around the inlet pipe. Waste shall be graded such that there is always positive flow to the chimney drain system.

Chimney Drain Termination

The waste filling and drain extension operations will continue until either the drain reaches the extent of the fill at an exterior slope, or the final landfill grades have been reached. Once the final elevation of the drain has been verified, the drain will be filled with #57 stone or bottom ash and a permanent cap affixed to the top of the inlet pipe. This cap will be installed approximately 5 feet below the final landfill elevation at that location.

CELL 1

CELL 2

CELL 3

CELL 4

STORMWATER BASIN

CRAIG ROAD

Proposed Access Road

EX. HDPE LEACHATE PIPE (TYP)

EX. HDPE LEACHATE SUMP (TYP)

VALVE BOX (TYP.)

LLDPE

2.5H:1V

E/5 PROPOSED 24" CORRUGATED HDPE CHIMNEY DRAIN 1

D/5 30" SDR-26 TRUNKLINE

E/5 PROPOSED 24" CORRUGATED HDPE CHIMNEY DRAIN 2

A/5 CONNECT TO EX. 36" PERFORATED HDPE RISER

E/5 PROPOSED 24" CORRUGATED HDPE CHIMNEY DRAIN 3

D/5 30" SDR-26 TRUNKLINE

E/5 PROPOSED 24" CORRUGATED HDPE CHIMNEY DRAIN 4

B/5 CAP PRIOR TO WASTE PLACEMENT OVER STRUCTURE

E/5 PROPOSED 24" CORRUGATED HDPE CHIMNEY DRAIN 5

D/5 30" SDR-26 TRUNKLINE

E/5 PROPOSED 24" CORRUGATED HDPE CHIMNEY DRAIN 6

NOTES:

- ALL 30" COLLECTION PIPES ARE TO BE INSTALLED ALONG EXISTING SLOPES ENSURING MIN. 1% SLOPE
- INLET AND TRUNKLINE LOCATIONS ARE APPROXIMATE AND MAY BE ADJUSTED TO FIT FIELD CONDITIONS AS NEEDED FOR OPERATIONS.

GRAPHIC SCALE 0 30 60 120 (FEET)

DATE	REVISIONS AND RECORD OF ISSUE	NO	BY	CK	APP

DESIGNED R/WH
DRAWN R/WH
CHECKED EEA
APPROVED EEA
DATE 6/20/11

© 2011 Joyce Engineering, Inc. All rights reserved.

ENGINEERING, INC.
2211 W. MEADOWVIEW ROAD
GREENSBORO, NC 27407
PHONE: (336) 323-0092
NC CORP LIC: C-0782

DUKE ENERGY BCSS FGD LANDFILL
BELEWS CREEK, NORTH CAROLINA

PROPOSED CHIMNEY DRAIN DESIGN
OPERATIONAL COVER

PROJECT NO. 845.1101.01

SCALE AS SHOWN

DRAWING NO. 1

L:\Duke Energy\Belews Creek\FGD\SHEET SET\SHEETS 1-4 OPERATIONAL COVER AND SECTIONS.dwg Layout=Layout1

DATE	REVISIONS AND RECORD OF ISSUE	NO	BY	CK	APP

NORTH CAROLINA PROFESSIONAL SEAL 27446 ENGINEER SHANE WHITSON
6/20/11

DESIGNED RWH
DRAWN RWH
CHECKED EEA
APPROVED EEA
DATE 6/20/11

© 2011 Joyce Engineering, Inc.
All rights reserved.

JOYCE ENGINEERING, INC.
2211 W. MEADOWVIEW ROAD
GREENSBORO, NC 27407
PHONE: (336) 323-0092
NC CORP LIC: C-0782

DUKE ENERGY BCSS FGD LANDFILL
BELWES CREEK, NORTH CAROLINA

PROPOSED CHIMNEY DRAIN DESIGN
PERMITTED FINAL COVER

PROJECT NO.
845.1101.01

SCALE
AS SHOWN

DRAWING NO.
2

L:\Duke Energy\Belews Creek\FGD\SHEET SET\SHEET 2 FINAL COVER.dwg Layout=Layout1

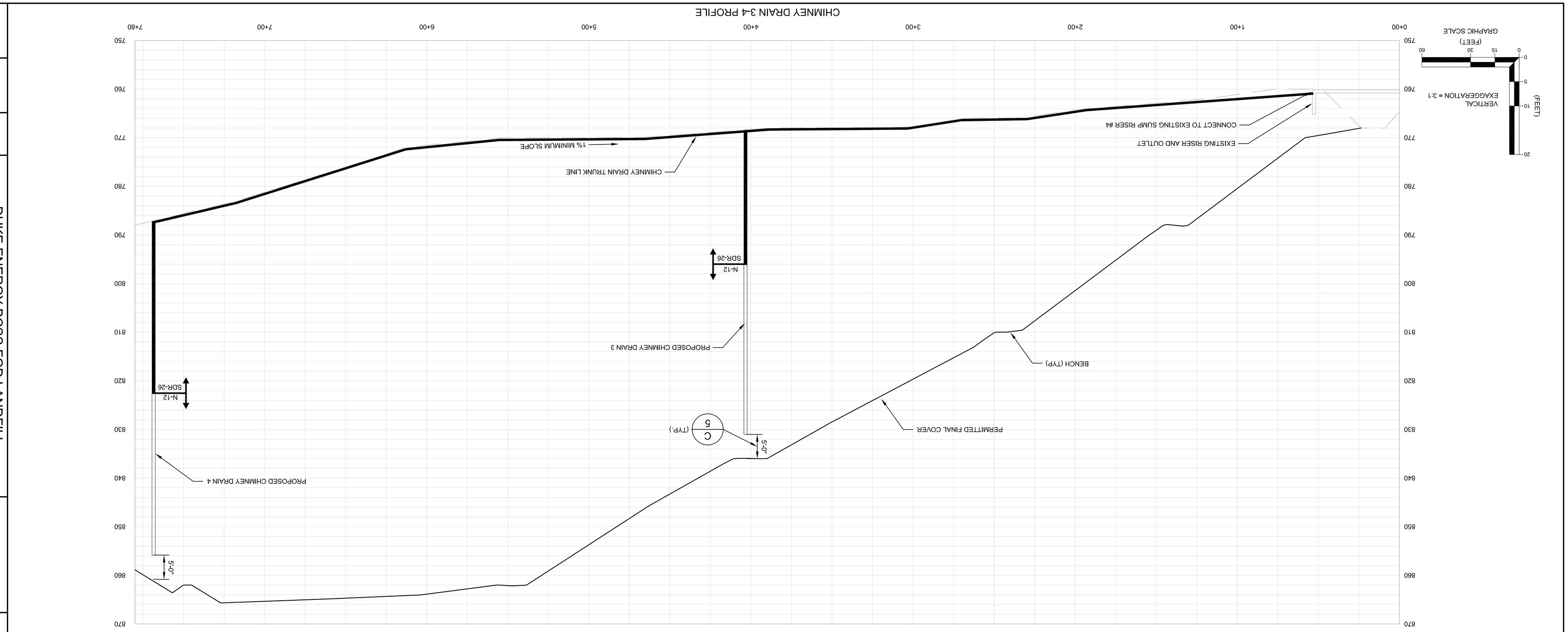

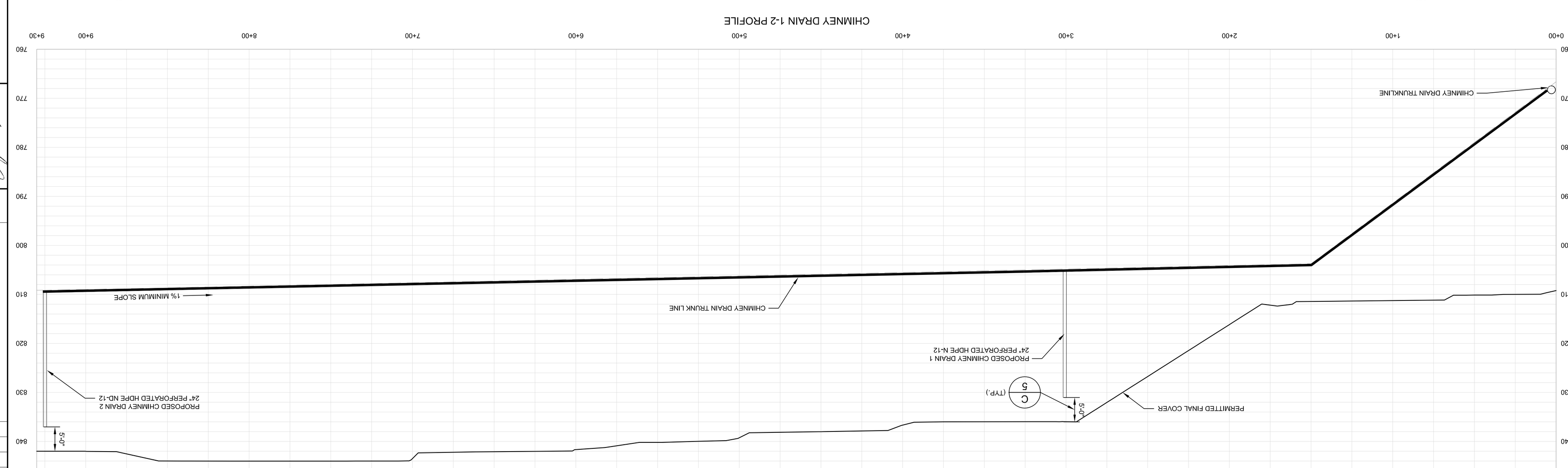

DUKE ENERGY BCSS FGD LANDFILL
BELLEWS CREEK, NORTH CAROLINA

PROPOSED CHIMNEY DRAIN DESIGN
CHIMNEY DRAIN PROFILE

PROJECT NO. 845.1101.01

SCALE AS SHOWN

DRAWING NO. 3

JOYCE ENGINEERING, INC.
2211 W. MEADOWVIEW ROAD
GREENSBORO, NC 27407
PHONE: (336) 323-0092
NC CORP LIC: C-0782

DESIGNED	RWH
DRAWN	RWH
CHECKED	EEA
APPROVED	EEA
DATE	6/20/11

© 2011 Joyce Engineering, Inc.
All rights reserved.

NORTH CAROLINA PROFESSIONAL ENGINEER SEAL 27446 ELAINE ANDREWS
6/20/11

DATE	REVISIONS AND RECORD OF ISSUE	NO	BY	CK	APP

L:\Duke Energy\Belews Creek\FGD\SHEET SETS\SHEETS 1-4 OPERATIONAL COVER AND SECTIONS.dwg Layout=SECTION

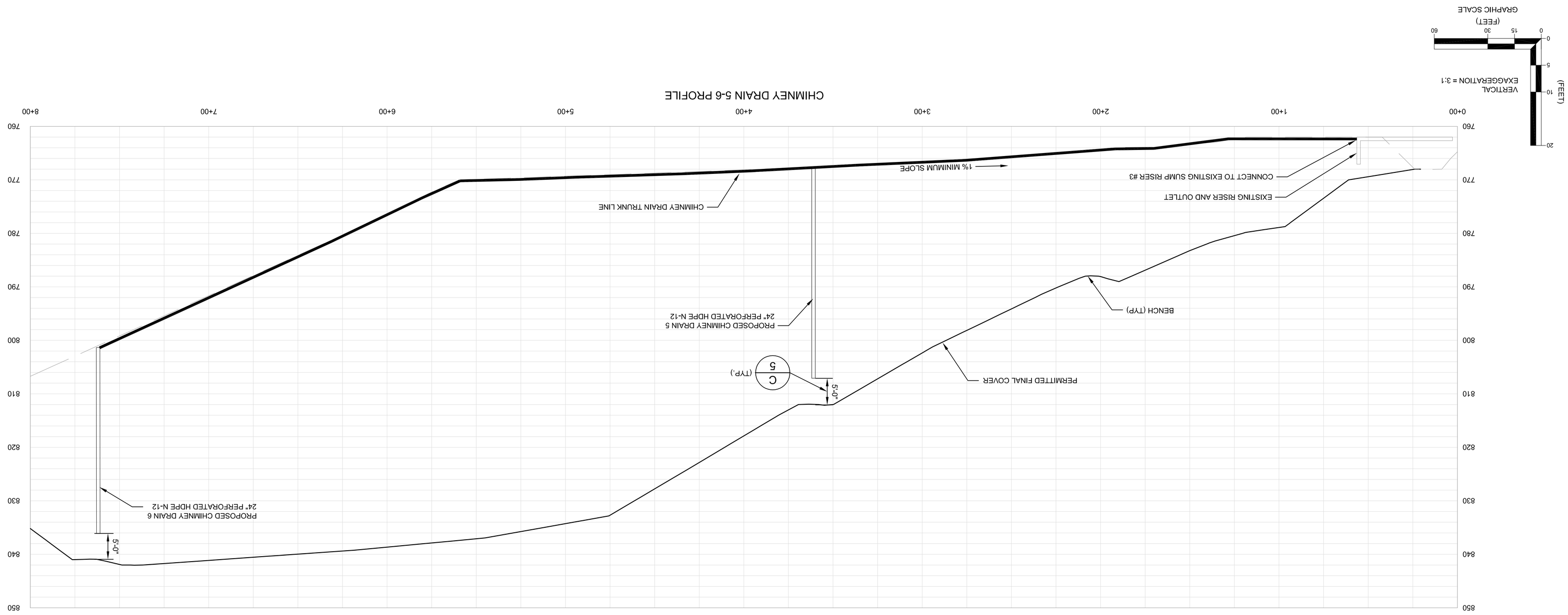

DUKE ENERGY BCSS FGD LANDFILL
BELLEWS CREEK, NORTH CAROLINA

PROPOSED CHIMNEY DRAIN DESIGN
CHIMNEY DRAIN PROFILE

PROJECT NO.
845.1101.01

SCALE
AS SHOWN

DRAWING NO.
4

JOYCE ENGINEERING, INC.
2211 W. MEADOWVIEW ROAD
GREENSBORO, NC 27407
PHONE: (336) 323-0092
NC CORP LIC: C-0782

DESIGNED	RWH
DRAWN	RWH
CHECKED	EEA
APPROVED	EEA
DATE	6/20/11

© 2011 Joyce Engineering, Inc.
All rights reserved.

NORTH CAROLINA PROFESSIONAL SEAL 27446 ENGINEER STEVE ANDREWS
6/20/11

DATE	REVISIONS AND RECORD OF ISSUE	NO	BY	CK	APP

L:\Duke Energy\Belews Creek\FGD\SHEET SETS\SHEETS 1-4 OPERATIONAL COVER AND SECTIONS.dwg Layout=SECTION (2)

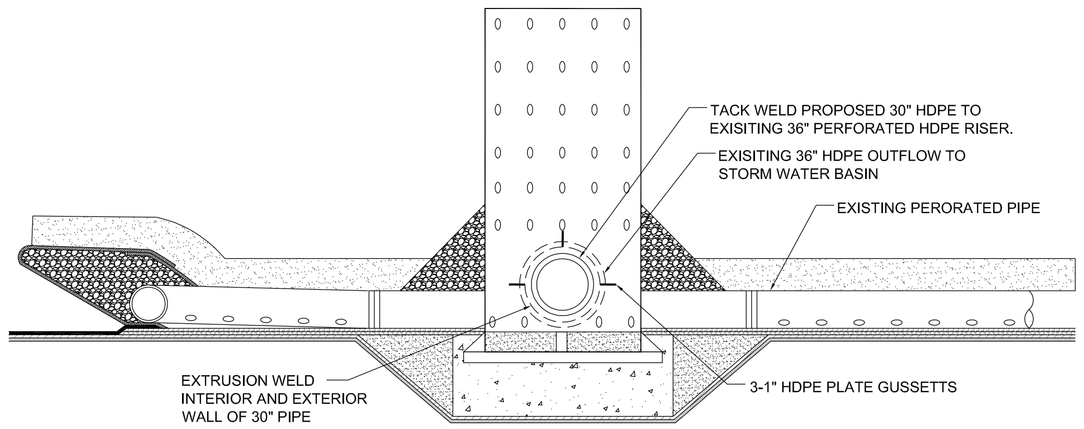

ACTIVE LEACHATE SUMP (A)
N.T.S.

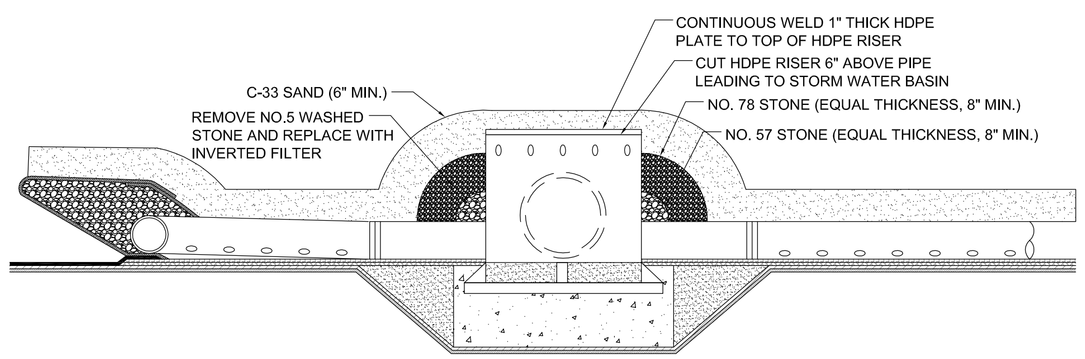

PERFORATED RISER PIPE
INACTIVE LEACHATE SUMP
(PRIOR TO LANDFILLING COVER) (B)
N.T.S.

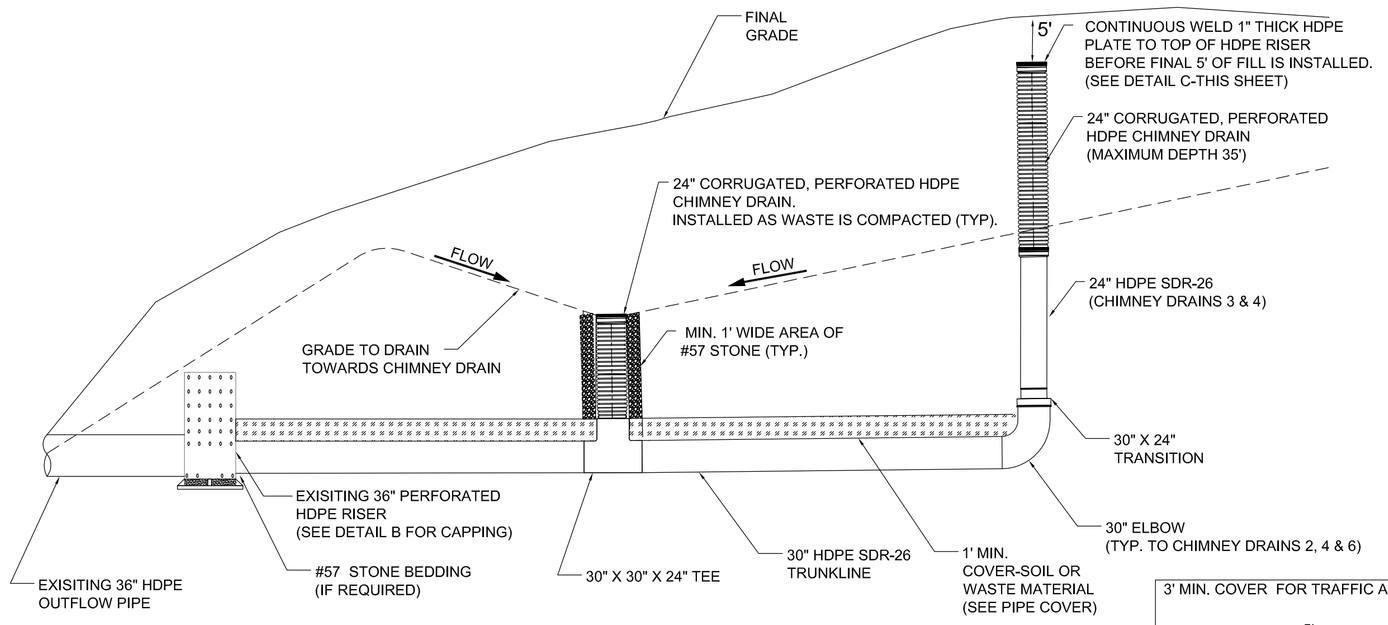

CHIMNEY DRAIN STORM WATER COLLECTION SYSTEM (D)
N.T.S.

3' MIN. COVER FOR TRAFFIC AREAS

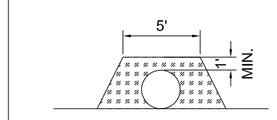

PIPE COVER

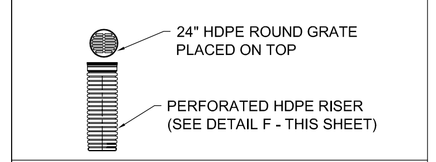

GRATE INLET DETAIL

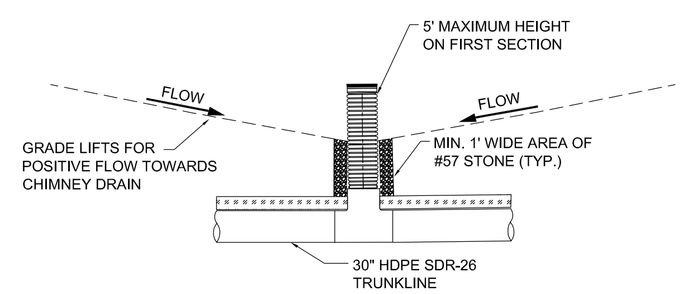

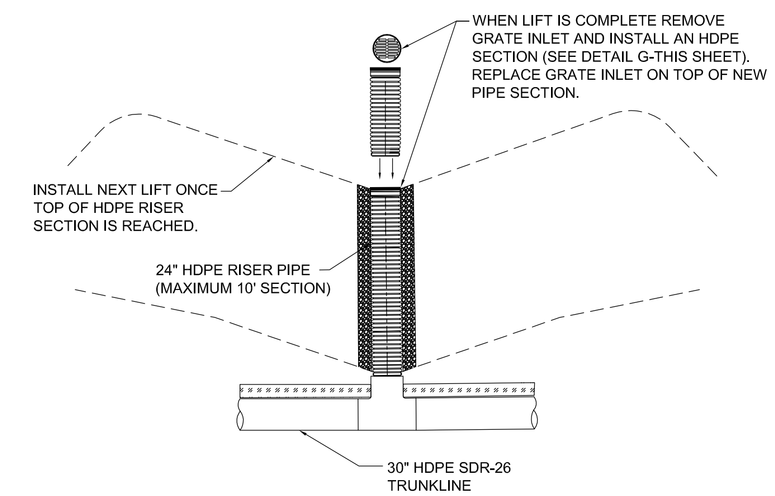

HDPE PERFORATED RISER
DETAIL & INSTALLATION (E)
N.T.S.

NOTE:

BACK FILL PIPE WITH #57 STONE TO PROVIDE PLATE STABILITY IF RISER IS ABANDONED MORE THAN 10' BELOW FINAL GRADE.

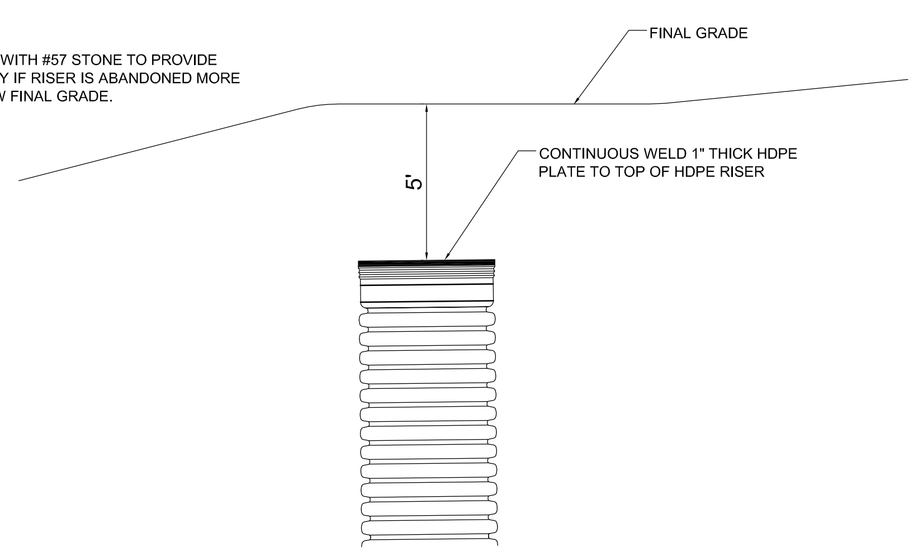

CORRUGATED RISER PIPE
INACTIVE CHIMNEY DRAIN
(PRIOR TO LANDFILLING COVER) (C)
N.T.S.

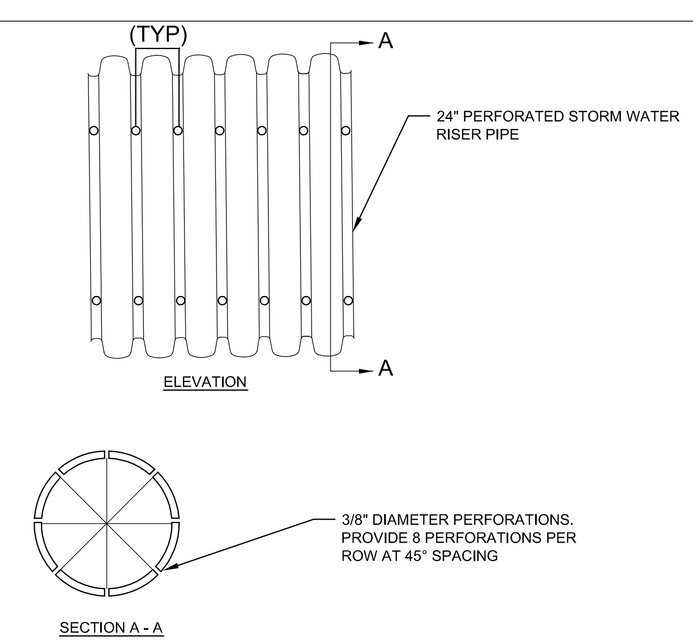

PERFORATED PIPE DETAIL (F)
N.T.S.

NOTES:

- ALL PIPE SHALL BE INSTALLED IN ACCORDANCE WITH ASTM D2321 - STANDARD PRACTICE FOR UNDERGROUND INSTALLATION OF FLEXIBLE THERMOPLASTIC SEWER PIPE, LATEST EDITION.
- SEE MAR MAC INC., FOR SPECIFIC PRODUCT INFORMATION AND SELECTION.
- POLYSEAL IS A REGISTERED TRADEMARK OF MAR MAC PRODUCTS INC. (WWW.MARMAC.COM)

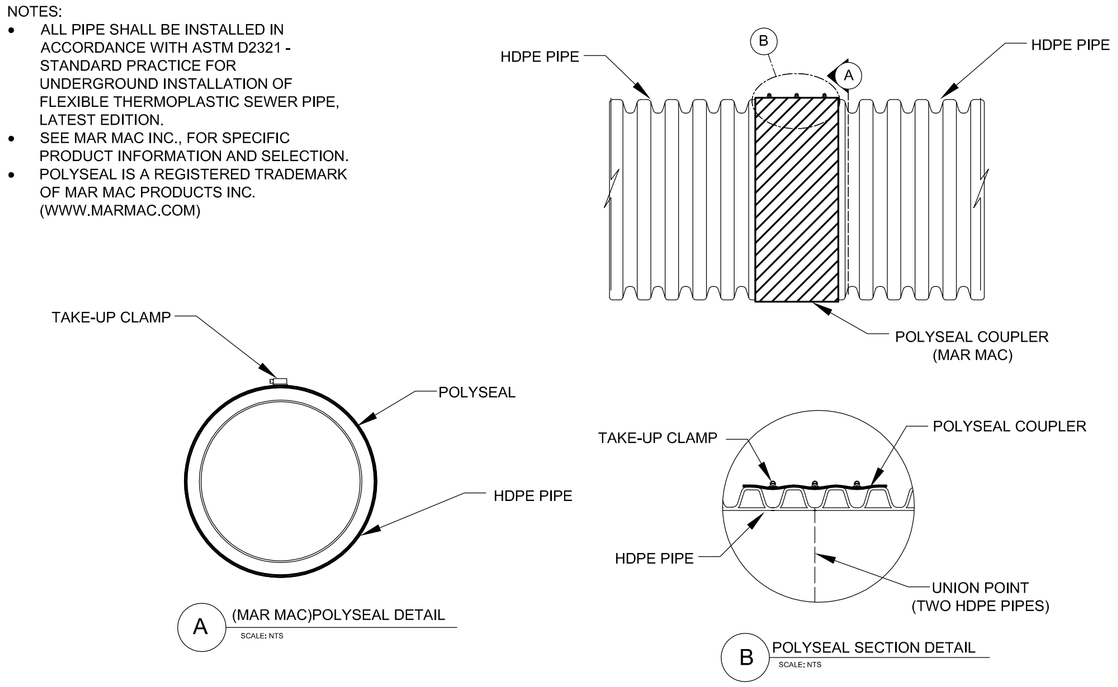

POLYSEAL COUPLER DETAIL (G)
N.T.S.

DATE	REVISIONS AND RECORD OF ISSUE	NO	BY	CK	APP

NORTH CAROLINA PROFESSIONAL SEAL 27146 ENGINEER BRIAN E. SHOEMAKER
6/20/11

DESIGNED HRW
DRAWN HRW
CHECKED EEA
APPROVED EEA
DATE 6/20/11

© 2011 Joyce Engineering, Inc. All rights reserved.

JOYCE ENGINEERING, INC.
2211 W. MEADOWVIEW ROAD
GREENSBORO, NC 27407
PHONE: (336) 323-0092
NC CORP LIC: C-0782

DUKE ENERGY BCSS FGD LANDFILL
BELEWS CREEK, NORTH CAROLINA

PROPOSED CHIMNEY DRAIN DESIGN
CONSTRUCTION DETAILS

PROJECT NO.
845.1101.01

SCALE
AS SHOWN

DRAWING NO.
5

L:\Duke Energy\Belews Creek\FGD\SHEET SET\DETAILS.dwg Layout=details

Appendix V

Leak Detection System

Leachate Storage Basin – Leak Detection System

During the operational phase of the landfill, the Leachate Storage Basin, located on the west side of the landfill, will collect stormwater that has contacted waste and leachate from cells that contain waste. After operation ceases within a cell, only leachate will drain to the lined storage basin. The liquid collected in this lined basin gravity drains to a pump station, where it is pumped to the station wastewater treatment system.

In addition to the primary geomembrane basin liner, the lined leachate storage basin is equipped with a Leak Detection System, consisting of a secondary geomembrane liner and drainage system that drains to a sump, located on the south end of the basin. The purpose of this system is to detect and to collect liquids that may leak through the primary liner and to pump the liquid to the pump station.

Located inside the 14 inch diameter side slope riser pipe is an electric powered pump and level sensor. The discharge from the pump is piped to the pump station sump.

The control panel for the pump and level sensor is equipped with a dome mounted flashing alarm light that will activate on a high level setting of 2 feet of head. The control panel is equipped with an hour meter, indicating run time for the pump, and a flow totalizer, indicating the quantity of liquid that has been pumped. The readings for the hour meter and for the flow totalizer are to be recorded weekly.

Leak Detection System – Action Leakage Rate Response Plan

The Action Leakage Rate is set at a rate of 50 gallons-per-day collected over a 30 day period. The Action Leakage Rate (ALR) Response Plan for the Leachate Storage Basin Leak Detection System is as follows:

- The NCDENR Solid Waste Regional Office in Winston-Salem is notified.
- Samples of the collected liquid are analyzed for specific conductivity, pH, sulfates, chlorides, and boron. Analytical methods are to be the same as described in the Groundwater Sampling and Analysis Plan.
- Samples of the liquid are collected from within the basin. These samples are subjected to the same analyses.
- The results of these analyses are compared to determine if the source of the collected liquid is the basin.
- The results of the analyses and a summary of the comparison will be sent to the NCDENR Solid Waste Regional Office in Winston-Salem.
- Further actions will be determined based on the results of the comparison of analytical results.

Appendix VI

NCDENR Communications

NCDENR
North Carolina Department of Environment and Natural Resources
Division of Waste Management

Beverly Eaves Perdue
Governor

Dexter R. Matthews
Director

Dee Freeman
Secretary

SOLID WASTE SECTION
July 1, 2011

Mr. Ed Sullivan
Duke Energy Corporation
EC13K/ Post Office Box 1006
Charlotte, North Carolina 28201-1006

Subject: Permit to Operate, Modification, Changes to the Approved Plans
Completeness Determination and Technical Review
Duke Energy, Belews Creek Steam Station, FGD Landfill Facility, Permit No. 8505
Stokes County, DIN 14257

Dear Mr. Sullivan:

On June 22, 2011 the Division of Waste Management (Division) received your application for a Permit to Operate, Modification, Changes to the Approved Plans, for the Duke Energy, Belews Creek Steam Station, FGD Landfill Facility, Permit No. 8505, located in Stokes County. The application was entitled;

Duke Energy, Belews Steam Station, Permit # 85-05, 3195 Pine Hall Road, Belews Creek, NC 27009, JEI Project # 845.1101.12. Prepared for Duke Energy. Prepared by Joyce Engineering. June 2011. DIN 14203.

The application contains a request to modify the Operations Plan with the addition of a Dust Control Plan and the addition of *Chimney Drains* to the Landfill's engineering design. The Division has performed a review of the application for a determination of completeness and determined the application is complete in accordance North Carolina General Statute NCGS 130A-295.8(e). A determination of completeness means the application contains the required components in accordance with North Carolina Administrative Code 15A NCAC 13B .0500. In addition to the determination of completeness the Division has completed the technical review of the application and requests that you respond to the following items in order to expedite the application;

1. According to Division records, Duke Energy of the Carolinas has been invoiced for the appropriate permitting fee; the fee must be paid prior to permit issuance. You may contact Mr. Jeff Skabo, Division Accounting Technician, at (919) 508-8505 for more information.
2. An electronic copy of the application, in pdf format, should be either sent to me at the address below or emailed to me at larry.frost@ncdenr.gov.
3. Drawing No.'s 1 and 2 of the application indicate that the leachate collection system (LCS) is piped to the *STORMWATER BASIN* and the proposed *Chimney Drains* are to be piped to the LCS. Leachate cannot be discharged as stormwater; it must be treated properly prior to discharge, typically as a portion of the NPDES permitted ash basin discharge. The Facility should provide additional information

regarding the collection, treatment and discharge of leachate from the FGD Landfill, to ensure leachate is being treated properly.

Should you have any questions regarding these matters you may contact me at (828) 296-4704 or at larry.frost@ncdenr.gov.

Sincerely,

Larry Frost
Environmental Engineer

cc: Kimberlee Benson – Duke Energy, 3195 Pine Hall Road, Belews Creek, NC 27009
Evan Andrews – Joyce Engineering
John Patron – SWS/WSRO

NCDENR
North Carolina Department of Environment and Natural Resources
Division of Waste Management
Dexter R. Matthews
Director

Beverly Eaves Perdue
Governor

Dee Freeman
Secretary

SOLID WASTE SECTION
March 26, 2012

Mr. Ed Sullivan, P.E., Waste Management and Remediation
Duke Energy of the Carolinas, LLC
EC13K/ Post Office Box 1006
Charlotte, North Carolina 28201-1006

Subject: Drawing OP-5, Cell Operation-Leachate Collection and Removal System – Revision Approval
Duke Energy of the Carolinas', Belews Creek Steam Station, FGD Residue Landfill
Stokes County, Permit No. 8505, DIN 16354

Dear Mr. Sullivan:

On March 23, 2012 the Division of Waste Management (Division) received Duke Energy's letter, entitled;

- *Belews Creek Steam Station FGD Landfill, NCDENR Permit # 85-05, Leachate System Modification.* Prepared by Duke Energy. March 2012. DIN 16353.

The letter requests revision of that portion of the approved Plans that deals with the closing of the leachate collection system drain lines, found in Drawing OP-5, Cell Operation-Leachate Collection and Removal System. The revision requests that all drain lines be allowed to remain open.

The Division has reviewed the request and hereby approves the immediate implementation of the revision at Duke Energy of the Carolinas', Belews Creek Steam Station, FGD Residue Landfill, Permit No. 8505. The Facility should operate in this manner until the current permit is either amended or modified. Therefore, the next time the Facility prepares either a Permit amendment or modification it is expected to include the revised Drawing OP-5 (revised 3/19/2012) as part of the application.

Should you have any questions regarding this matter contact me at (828) 296-4704 or larry.frost@ncdenr.gov.

Sincerely,

Larry Frost
Environmental Engineer

cc: Sean DeNeale – Duke Energy
Hugh Jernigan – SWS/WSRO

212 S. Tryon St., #1690
Charlotte, NC 28281
tel: 704/817-2037
fax: 704/837-2010
www.JoyceEngineering.com

July 24, 2012

Mr. Larry Frost
Environmental Engineer
NC DENR DWM
2090 US Highway 70
Swannanoa, NC 28778

Ref: Duke Energy, Belews Creek Steam Station
Permit # 8505
3195 Pine Hall Road
Belews Creek, NC 27009
JEI Project # 845.1202.11.01

Dear Larry:

On behalf of Duke Energy and the Belews Creek Steam Station, Joyce Engineering is hereby submitting the attached Operations Plan for the permit renewal of the Flue Gas Desulfurization Residue Landfill Phase 1.

The Operations Plan has been revised based on your *Determination of Completeness and Technical Review* dated July 9, 2012. An electronic copy of the revised "Drawing OP-5" is now included, and the cost estimates for financial assurance now reflect the previously approved estimates for other Duke Energy facilities. Also, a separate cost estimate for Potential Assessment and Corrective Action has been added to the Plan. Hard copies of the Plan shall be provided upon your approval of the electronic submittal and at your request.

Please let me know if you have any questions or concerns regarding this submittal and thank you in advance for your assistance.

Sincerely,
JOYCE ENGINEERING, INC.

Martin "Mark" Shumpert, PE
Technical Consultant

Cc: Ed Sullivan, PE – Duke Energy
Kimberlee Hutchinson, PE – Duke Energy

Attachments: FGD Residue Landfill Operations Plan