SMITH+GARDNER
ENGINEERS

ADDRESS
14 N. Boylan Avenue, Raleigh NC 27603

TEL
919.828.0577

WEB
www.smithgardnerinc.com

August 24, 2012

Ms. Donna Wilson
Permitting Engineer
NCDENR – Division of Waste Management
1646 Mail Service Center
Raleigh, NC 27699-1646

RE: Permit Amendment Application
Johnston County C&D Landfill – Area 2 (Permit No. 51-03)

Dear Ms. Wilson:

On behalf of Johnston County, Smith Gardner, Inc. (S+G) has prepared this permit amendment application for the continued operation of the Area 2 construction and demolition debris (C&D) landfill unit at the County's landfill facility in Smithfield. Cell 1 of this landfill unit was constructed in 2006-07 and an operating permit (Permit No. 51-03) was issued on August 24, 2007. This permit application includes the following components following Rule 15A NCAC 13B .0535(b):

1. Engineering Plan
2. Construction Quality Assurance (CQA) Plan
3. Operation Plan
4. Closure and Post-Closure Plan
5. Monitoring Plans

Additionally, modifications have been made to the landfill's facility boundary to address comments from the Division of Waste Management (see below).

ENGINEERING PLAN

The engineering plan provided in the following approved permit application still currently reflects the design of the Area 2 landfill unit (including the yet to be constructed Cell 2):

Permit to Construct Application
Johnston County C&D Landfill – Area 2
As Revised Through May 2006.

Note that based on the most recent survey of the landfill performed on May 31, 2012, existing Cell 1 is not anticipated to reach capacity until mid-2014 based on a disposal rate of 25,000 tons/year. Thus, the County currently anticipates construction of Cell 2 in FY 2013-14.

A copy of this plan and the associated drawings are provided as **Attachment A**.

CONSTRUCTION QUALITY ASSURANCE (CQA) PLAN

The construction quality assurance (CQA) manual provided in the following approved permit application is applicable for planned construction at the facility:

Permit Amendment Application
Johnston County MSW Landfill – Phase 4A – Cell 3
As Revised Through January 2009.

A copy of this plan is provided as **Attachment B.**

OPERATION PLAN

The current operations manual for the facility was updated in December 2011 as part of a permit modification related to the landfill gas (LFG) system. Figure 1 of this document has been revised to reflect the new facility boundary and monitoring locations (see Monitoring Plans and Facility Boundary Modifications below). All other text of the document remains the same.

A copy of the updated Operations Manual is provided as **Attachment C.**

CLOSURE AND POST-CLOSURE PLAN

The current closure and post-closure plan for the facility was updated in December 2011 as part of a permit modification related to the landfill gas (LFG) system.

A copy of this plan is provided as **Attachment D.**

UPDATED MONITORING PLANS

As part of this application, an updated water quality monitoring plan has been prepared which incorporates all water quality monitoring activities for the facility (MSW and C&D landfill units) Additionally, a separate landfill gas (LFG) monitoring plan has been prepared for the facility.

Copies of the water quality monitoring plan and the LFG monitoring plan are provided as **Attachment E** and **Attachment F**, respectively.

FACILITY BOUNDARY MODIFICATIONS

The attached **Figure 1** includes a revised facility boundary. A total of approximately 34.4 acres have been added along the east and southeast side of the facility to include the limits of the current yard waste processing area and a strip of property to the southeast of MSW Phases 1 & 2 and the Area 2 C&D landfill unit. The yard waste processing area has been in operation on County-owned property for a number of years but a portion of the operations has been outside the previously approved facility boundary. The strip of property to the southeast of MSW Phases 1 & 2 and the Area 2 C&D landfill unit was previously contemplated as an addition to the facility boundary in 1997 but was not recorded. Subsequently the County purchased a large tract of land to the east (known as the Heavener-Holding Property) in 2001. Upon the approval of the revised boundary, the County will have the facility boundary modifications recorded.

If you should you have any questions or comments regarding this application, please contact us at your earliest convenience.

Sincerely,
SMITH GARDNER, INC.

Joan A. Smyth, P.G.
Senior Hydrogeologist
joan@smithgardnerinc.com

NORTH CAROLINA LICENSED SEAL 1369 GEOLOGIST JOAN A. SMYTH

8/24/12

Pieter K. Scheer, P.E.
Project Manager
pieter@smithgardnerinc.com

NORTH CAROLINA PROFESSIONAL SEAL 021686 ENGINEER PIETER K. SCHEER

8/24/12

Attachments: Figure 1 – Existing Site Conditions Drawing
A. Engineering Plan & Drawings
B. CQA Manual
C. Operations Manual
D. Closure and Post-Closure Plan
E. Water Quality Monitoring Plan
F. LFG Monitoring Plan

cc: Rick Proctor, Johnston County
Tim Broome, P.E., Johnston County

FOR REGULATORY REVIEW ONLY

NOT FOR BIDDING OR CONSTRUCTION

PARCEL REFERENCES	
PARCEL	COUNTY DEED BOOK REFERENCE
1	D.B. 775, PG. 410
2	D.B. 952, PG. 376
3	D.B. 763, PG. 525
4	D.B. 1228, PG. 652
5	D.B. 1215, PG. 747
6	D.B. E-3, PG. 1

NOTE:
PROPERTY INFORMATION FROM "MAP FOR JOHNSTON COUNTY" PREPARED BY L. DENNIS LEE, P.A., SMITHFIELD, NC, DATED MARCH 22, 1994, AS REVISED THROUGH JANUARY 30, 1995 (COUNTY PLAT BOOK 59, PAGE 437) AND COUNTY REGISTER OF DEEDS OFFICE.

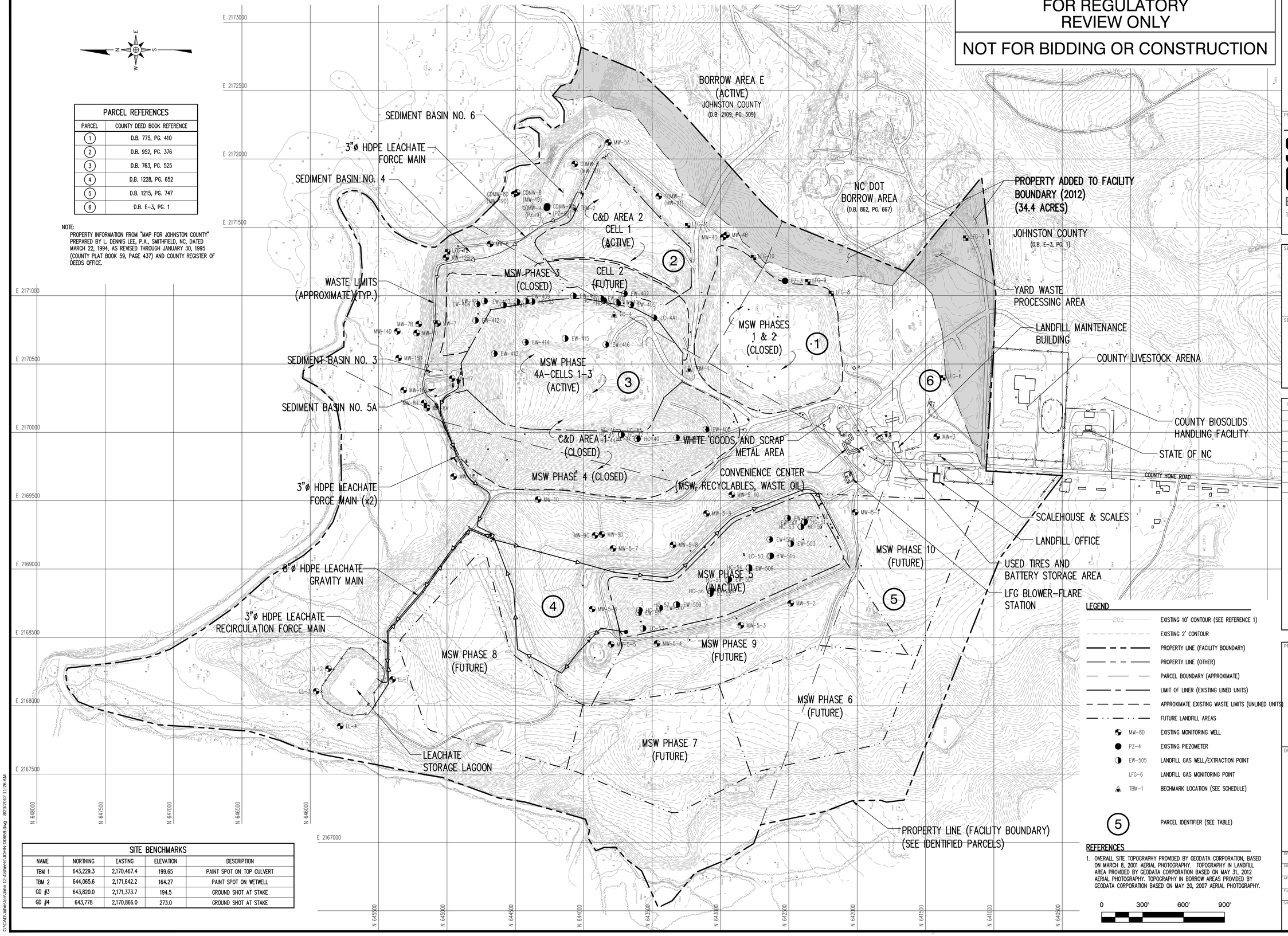

LEGEND

- EXISTING 10' CONTOUR (SEE REFERENCE 1)
- EXISTING 2' CONTOUR
- PROPERTY LINE (FACILITY BOUNDARY)
- PROPERTY LINE (OTHER)
- PARCEL BOUNDARY (APPROXIMATE)
- LIMIT OF LINER (EXISTING LINED UNITS)
- APPROXIMATE EXISTING WASTE LIMITS (UNLINED UNITS)
- FUTURE LANDFILL AREAS
- MW-8D EXISTING MONITORING WELL
- PZ-4 EXISTING PIEZOMETER
- EW-505 LANDFILL GAS WELL/EXTRACTION POINT
- LFG-6 LANDFILL GAS MONITORING POINT
- TBM-1 BECHMARK LOCATION (SEE SCHEDULE)
- 5 PARCEL IDENTIFIER (SEE TABLE)

REFERENCES

1. OVERALL SITE TOPOGRAPHY PROVIDED BY GEODATA CORPORATION, BASED ON MARCH 8, 2001 AERIAL PHOTOGRAPHY. TOPOGRAPHY IN LANDFILL AREA PROVIDED BY GEODATA CORPORATION BASED ON MAY 31, 2012 AERIAL PHOTOGRAPHY. TOPOGRAPHY IN BORROW AREAS PROVIDED BY GEODATA CORPORATION BASED ON MAY 20, 2007 AERIAL PHOTOGRAPHY.

0 300' 600' 900'

SITE BENCHMARKS				
NAME	NORTHING	EASTING	ELEVATION	DESCRIPTION
TBM 1	643,229.3	2,170,467.4	199.65	PAINT SPOT ON TOP CULVERT
TBM 2	644,065.6	2,171,642.2	164.27	PAINT SPOT ON WETWELL
GD #3	643,820.0	2,171,373.7	194.5	GROUND SHOT AT STAKE
GD #4	643,778	2,170,866.0	273.0	GROUND SHOT AT STAKE

PREPARED FOR:

JOHNSTON COUNTY
NORTH CAROLINA
DEPARTMENT OF
PUBLIC UTILITIES

PREPARED BY:

NC LIC. NO. C-0828 (ENGINEERING)
SMITH+ GARDNER
ENGINEERS
14 N. Boylan Avenue, Raleigh NC 27603 | 919.828.0577

SEAL

SEAL

REV.	DATE	DESCRIPTION

PROJECT TITLE:

JOHNSTON COUNTY LANDFILL

DRAWING TITLE:

EXISTING AND PROPOSED LANDFILL UNITS AND SOLID WASTE MANAGEMENT ACTIVITIES

DESIGNED: P.K.S.	PROJECT NO: JOHN 12-4
DRAWN: C.T.J.	SCALE: AS SHOWN
APPROVED:	DATE: AUG. 2012
FILENAME: JOHN-D0659	
SHEET NUMBER:	DRAWING NUMBER: FIG.1

G:\CAD\Johnston\John 12-4\Sheets\JOHN-D0659.dwg - 8/23/2012 11:26 AM

Attachment A

Engineering Plan and Drawings

Permit Amendment Application
Johnston County C&D Landfill – Area 2 (Permit No. 51-03)

Facility And Engineering Plan

Johnston County C&D Landfill - Area 2
Johnston County, North Carolina

Prepared for:
Johnston County
Department of Public Utilities

October 2005
Revised: May 2006

G.N. Richardson & Associates, Inc.
Engineering and Geological Services
14 N. Boylan Avenue
Raleigh, North Carolina 27603

JOHNSTON COUNTY
JOHNSTON COUNTY C&D LANDFILL - AREA 2

FACILITY AND ENGINEERING PLAN

TABLE OF CONTENTS

Page

1.0 INTRODUCTION
1.1 Overview 1.0-1
1.2 Site Description 1.0-1

2.0 FACILITY REPORT
2.1 Overview 2.0-1
2.2 Facility Services and Waste Stream 2.0-1
2.2.1 Facility Services 2.0-1
2.2.2 Types of Waste 2.0-1
2.2.3 Disposal Rates and Estimated Variances 2.0-1
2.3.1.1 Projected County Disposal Rates 2.0-1
2.3.1.1 Maximum Disposal Rates 2.0-2
2.2.4 Service Area 2.0-2
2.2.5 Procedures for Waste Segregation 2.0-2
2.2.6 Equipment Requirements 2.0-3
2.3 Landfill Capacity 2.0-3
2.3.1 Total Operating Capacity and Life Expectancy 2.0-3
2.3.1.1 MSW Landfill Units 2.0-3
2.3.1.2 C&D Landfill Units 2.0-3
2.3.2 In-Place Ratio of Waste to Soil and Compaction Factors 2.0-4
2.3.1.1 MSW Landfill Units 2.0-4
2.3.1.2 C&D Landfill Units 2.0-4
2.4 Available Soil Resources and Required Soil Quantities 2.0-4
2.4.1 Earthwork Quantities 2.0-4
2.4.2 Soil Liner 2.0-4
2.4.3 Leachate Collection System (LCS) and Protective Cover 2.0-5
2.4.4 Daily and Intermediate Cover 2.0-5
2.4.5 Vegetative Soil Layer 2.0-5
2.4.6 Soil Summary 2.0-5
2.5 Facility Design Criteria 2.0-5
2.5.1 MSW Landfill Units 2.0-5
2.5.1.1 Horizontal Separation Requirements 2.0-5
2.5.1.2 Vertical Separation Requirements 2.0-5
2.5.2 C&D Landfill Units 2.0-6
2.5.2.1 Horizontal Separation Requirements 2.0-6
2.5.2.2 Vertical Separation Requirements 2.0-6

Table Of Contents (Continued)

Page

2.6 Containment and Environmental Control Systems 2.0-6
2.6.1 Landfill Subgrade and Perimeter Berms 2.0-6
2.6.2 Base Liner System 2.0-7
2.6.2.1 MSW Landfill Units 2.0-7
2.6.2.2 Lined C&D Landfill Units 2.0-7
2.6.3 Leachate Collection System (LCS) 2.0-8
2.6.4 Protective Cover 2.0-9
2.6.5 Stormwater/Leachate Separation System 2.0-9
2.6.6 Final Cover System 2.0-9
2.6.7 Erosion and Sedimentation Control 2.0-10
2.6.8 Landfill Gas (LFG) Control 2.0-10
2.6.8.1 MSW Landfill Units 2.0-10
2.6.8.2 C&D Landfill Units 2.0-10
2.6.9 Access and Roadways 2.0-11
2.7 Slope Stability and Settlement 2.0-11
2.8 Leachate Management 2.0-11
2.9 Special Engineering Features 2.0-11
2.9.1 Alternative Liner Systems 2.0-11

3.0 GEOSYNTHETICS DESIGN
3.1 Overview 3.0-1
3.2 Geosynthetic Components and Design Parameters 3.0-1
3.2.1 Geosynthetic Clay Liner (GCL) 3.0-1
3.2.2 Base Geomembrane 3.0-1
3.2.3 Drainage Geocomposite 3.0-1
3.2.4 Separator (Type GT-S) Geotextile 3.0-2
3.2.5 Geosynthetic Rain Cover 3.0-2
3.2.6 Final Cover Geomembrane 3.0-3

4.0 LEACHATE MANAGEMENT SYSTEM DESIGN
4.1 Overview 4.0-1
4.2 Leachate Collection System (LCS) 4.0-1
4.2.1 LCS Pipe Spacing 4.0-1
4.2.2 LCS Pipe Sizing 4.0-2
4.2.3 LCS Pipe Mechanical Properties 4.0-2
4.2.3.1 Static Load Requirement 4.0-2
4.2.3.2 Equipment Loading (Dynamic Load Requirement) 4.0-3
4.3 Leachate Discharge and Storage System 4.0-3
4.3.1 Leachate Sump 4.0-3
4.3.2 Leachate Discharge Piping 4.0-3

Table Of Contents (Continued)

Page

4.3.3 Leachate Storage Lagoon 4.0-4
4.4 Leachate Pretreatment 4.0-4
4.5 Leachate Generation 4.0-4

5.0 FINAL COVER SYSTEM DESIGN
5.1 Overview 5.0-1
5.2 Description of Components 5.0-1
5.2.1 Intermediate Cover 5.0-1
5.2.2 Landfill Gas (LFG) Management System 5.0-1
5.2.3 Final Cover Geomembrane 5.0-1
5.2.4 Drainage Geocomposite (DGC) 5.0-2
5.2.5 Vegetative Soil Layer 5.0-2
5.2.6 Surface Water Control Devices 5.0-2

6.0 LOCAL GOVERNMENT APPROVAL
6.1 Overview 6.0-1
6.2 Documentation 6.0-1

APPENDICES

Appendix A Landfill Design Calculations
1.0 Quantity Calculations
1.1 Volumes of Existing Landfill Units
1.2 Landfill Life Expectancy (Rev. May 2006)
1.3 Earthwork Quantities (Rev. May 2006)
2.0 Geosynthetics Calculations
2.1 Anchor Trench Sizing
2.2 Filter Geotextile Analysis
2.3 Cushion Geotextile Analysis
3.0 Leachate Management System Calculations
3.1 Leachate Collection Pipe Spacing
3.2 Leachate Collection Pipe Sizing
3.3 HDPE Pipe Stress Analysis
3.4 Evaluation of Leachate Generation Rates
3.5 Leachate Pump Design Calculations
4.0 Final Cover System Calculations
4.1 Final Cover Drainage Layer Analysis
4.2 Rain Gutter/Down Pipe Sizing

Table Of Contents (Continued)

Appendix B Local Government Approval Documentation
- 1.0 Public Meeting Advertisement and Documentation
- 2.0 Copy of Resolution
- 3.0 Public Meeting Minutes
- 4.0 Zoning Determination Letter
- 5.0 Solid Waste Management Plan Consistency Letter

SECTION 1.0
INTRODUCTION

1.1 OVERVIEW

The Johnston County Landfill facility is located on County Home Road off Highway 210 near Smithfield, North Carolina and operates under NC Solid Waste Permit 51-03. The landfill facility includes an active ± 22 acre Subtitle D municipal solid waste (MSW) landfill (Phase 4A - Cells 1 & 2), a separate active construction and demolition debris (C&D) landfill unit (Area 1), a landfill office, scales and scalehouse, a citizen's convenience center, and a yard waste processing area.

Based on current projections, the active C&D landfill unit (Area 1), which is a vertical expansion over the closed unlined Phase 4 MSW landfill unit, is expected to remain in operation until 2007. Once Area 1 has reached capacity, the County will need to move operations to a new unit (Area 2) constructed to the east and partially overlying the closed unlined Phase 3 MSW landfill unit. It is the intent of Johnston County to proceed with the construction of Area 2 in spring 2006.

The purpose of this Facility and Engineering Plan is to present the plans for the development of the Area 2 C&D landfill unit. Specifically, the detailed design of Area 2 - Cell 1 is presented herein.

This section gives a brief overview of this report and a description of the site. Section 2 gives a description of the development of the Johnston County Landfill facility including the currently proposed Area 2 C&D landfill unit as well as planned future MSW landfill units. Sections 3 through 5 of this report focus on the detailed design of geosynthetics, the leachate management system, and the final cover system of the Area 2 disposal unit, respectively.

1.2 SITE DESCRIPTION

The Area 2 site is situated within the currently approved facility boundary, which consists of approximately 500 acres. Existing conditions are shown on **Drawing S1** of the Project Drawings (**Attachment G** to the Permit to Construct Application).

The proposed Area 2 C&D landfill unit will occupy approximately 15.8 acres (lined). At the projected gate rates described in **Section 2.0** (Facility Report), Area 2 has been designed for approximately 11 years of disposal volume (Cell 1 has a life expectancy of approximately 6 years). In that Area 2 will partially overlie the closed Phase 3 MSW landfill unit, the Area 2 landfill unit has been designed to meet current DWM setback and horizontal buffer requirements for MSW landfills: 300 feet from property lines; 500 feet from residences or active water wells.

SECTION 2.0
FACILITY REPORT

2.1 OVERVIEW

This section presents a plan for the development of the Area 2 C&D landfill unit of the Johnston County Landfill facility. In that the presently approved Facility Plan is being modified with this application, this report has been prepared in accordance with the requirements of Rule .1619 of the North Carolina Solid Waste Management Regulations.

2.2 FACILITY SERVICES AND WASTE STREAM

2.2.1 Facility Services

Currently, the following activities or services are provided at the Johnston County Landfill facility:

- Scales and scale house facilities
- Administrative offices
- Maintenance building
- Convenience center
- Lined municipal solid waste (MSW) landfill - (Phase 4A - Cells 1&2) (NC Permit No. 51-03)
- Construction and demolition debris (C&D) landfill - (Area 1) (NC Permit No. 51-03).

The following facilities are proposed for the facility:

- C&D landfill - Area 2
- Lined MSW landfill - Phase 4A - Cell 3 and Phases 6-10.

2.2.2 Types of Waste

The Johnston County Landfill accepts mixed municipal solid waste (MSW) originating from residential, commercial, and industrial sources, construction and demolition debris (C&D), and other wastes (i.e. white goods, tires, and yard waste). These wastes are segregated and directed to on-site facilities for disposal/processing as described below.

2.2.3 Disposal Rates and Estimated Variances

2.2.3.1 Projected County Disposal Rates

Based on the 2004-2005 Solid Waste Management Annual Report information provided by the County, the landfill accepted 108,751 tons of MSW and 31,233 tons of C&D waste from 7/1/04 to 6/30/05 (MSW: average 9,063 tons per month

or 349 tons per day based on 312 operating days per year; C&D: average 2,603 tons per month or 100 tons per day based on 312 operating days per year). The population served during this time period was estimated as 145,968 which translates to 0.75 tons/person/year of MSW and 0.21 tons/person/year of C&D waste being disposed of at the landfill.

Based on the anticipated population figures and increases projected through 2030 from the NC Demographics Unit and the current per capita disposal rate, **Table 2.1A and Table 2.1B** give the projected annual and monthly tonnages to be disposed of at the Johnston County Landfill facility (in-County waste only) for MSW and C&D waste, respectively. Note that monthly variances shown in the tables are based on County records which indicate that the maximum anticipated monthly variance is about plus or minus 20 percent from average. Also note that population figures after 2030 are based on an assumed constant percentage increase from 2030 onward.

2.2.3.2 Maximum Disposal Rates

Based upon the projected in-County disposal rates shown in **Tables 2.1A and 2.1B** and the maximum out-of-County disposal rate stated below, the landfill facility will accept waste at the following maximum rates (tons/day is based on 312 operating days per year):

2006-2015	350,000 tons/year (1,122 tons/day)
2016-2025	401,000 tons/year (1,285 tons/day)
2026-2035	452,000 tons/year (1,449 tons/day)
2036-2045	505,000 tons/year (1,619 tons/day)
2046-2055	568,000 tons/year (1,821 tons/day)

Of the rates shown, a maximum of 156,000 tons/year (500 tons/day) will be from outside the County.

2.2.4 Service Area

The landfill serves the State of North Carolina.

2.2.5 Procedures for Waste Segregation

Procedures for waste segregation at the proposed landfill will be similar to existing operations. A brief description of planned procedures is as follows.

Wastes are segregated at the scales. Operators at the scalehouse are trained to classify and segregate the waste stream. MSW and C&D wastes are directed to the active MSW or C&D landfill unit. Yard wastes are directed toward the yard waste processing area. Tires and white goods are stockpiled temporarily for disposal by private recycling

contractors. directed to the white goods processing area. Small loads and recyclables are directed toward the citizen's convenience center.

Employees at the landfill are trained in the safety procedures for the handling and detection of illegal waste. The screening of unacceptable waste is done through the random checking of incoming loads by a County employee at the scale house and at the tipping area. When unacceptable waste is detected at the scale house, the load is rejected and not permitted into the facility. If hazardous waste is found at the tipping area, identification of the truck or persons is made (if possible) and documented, then the hazardous waste is identified and placed in a hazardous waste container and taken to a designated hazardous waste staging area for proper disposal. If this occurs, the event is reported to the appropriate authorities.

2.2.6 Equipment Requirements

The equipment required for operation and maintenance of the proposed landfill units are anticipated to be the same as or similar to those currently used at the facility.

2.3 LANDFILL CAPACITY

2.3.1 Total Operating Capacity and Life Expectancy

2.3.1.1 MSW Landfill Units

Drawing S2 (Site Development Plan - Base Grades) and **Drawing S3** (Site Development Plan - Final Cover Grades), show conceptual subgrade and final cover grades for the development of Phases 4A and 6 through 10. The final cover side slopes will be at a 4H to 1V slope, then transition at flatter slopes (5 - 8%) to the peak elevations.

2.3.1.2 C&D Landfill Units

Drawing S2 (Site Development Plan - Base Grades) identifies the conceptual subgrade grades for the development of Area 2. **Drawing S3** (Site Development Plan - Final Cover Grades), identifies the final configuration of Areas 1 and 2. The final cover side slopes will be at a 4H to 1V slope, then transition at flatter slopes (5 - 8%) to the peak elevations.

The estimated total gross and net operating capacities, life expectancies, and areas of existing and planned MSW and C&D landfill units are shown in **Tables 2.2A and 2.2B**, respectively. Note that the approximate total capacities and waste footprint areas for closed unlined MSW landfill units are also shown in **Table 2.2A**. The net capacity for waste and corresponding life expectancy of each disposal area accounts for daily and intermediate cover and/or final cover. For MSW landfill units, a range of life expectancies are given to cover projected County-only tonnages (longer life expectancy)

through the maximum disposal rates given in **Section 2.2.3.2** (shorter life expectancy). For C&D landfill units, a range of life expectancies are given to cover projected County-only tonnages (longer life expectancy) through projected County-only tonnages plus the anticipated 20% variance (shorter life expectancy).

2.3.2 In-Place Ratio of Waste to Soil and Compaction Factors

2.3.2.1 MSW Landfill Units

The capacities obtained above were based on a 15 percent periodic cover ratio and a compaction factor ranging from 1,200 to 1,400 pounds per cubic yard (pcy). The assumed periodic cover ratio is indicative of the County's current practices of using a tarp as an alternative to placing 6 inches of daily cover soil. The assumed compaction factor of 1,200 pcy is based on past analyses of waste density adjusted upward for increased waste heights. A compaction factor of 1,400 pcy was assumed for areas with the greatest height (i.e. Phase 4A - Cell 3, Phase 9, and Phase 10).

2.3.2.2 C&D Landfill Units

The capacities obtained above were based on a 10 percent periodic cover ratio and a compaction factor of 1,200 pounds per cubic yard. The assumed periodic cover ratio is typical for C&D landfills. The assumed compaction factor is based on a recent analysis of waste density in Area 1.

Note that changes in landfill operations (i.e. changes in the use of alternative daily cover and/or compaction equipment/methods) may affect the values assumed above and, thus, alter the life of the various landfill units.

2.4 AVAILABLE SOIL RESOURCES AND REQUIRED SOIL QUANTITIES

2.4.1 Earthwork Quantities

The soils required to construct and operate the existing and planned MSW and C&D landfill units will be removed from on-site borrow sources or will be imported from off-site. The soils removed during excavation of landfill units may be used for structural fill, compacted soil liner, and/or general fill. These excavation (cut) and structural fill (fill) volumes are shown in **Table 2.3**.

2.4.2 Soil Liner

The soil required for the soil liner will be on-site or imported soils. The in-place volume required for each landfill unit is shown in **Table 2.4**.

2.4.3 Leachate Collection System (LCS) and Protective Cover

Overlying the liner system is the leachate collection system and protective cover. This layer is 24 inches thick on both the landfill base and side slopes. The required in-place volume of protective cover for each disposal area is shown in **Table 2.5**. A portion of this volume will consist of aggregate, which will come from off-site sources.

2.4.4 Daily and Intermediate Cover

Assuming the previously mentioned periodic cover ratios, the required in-place volume for use as daily and intermediate cover during landfill operations is shown in **Table 2.6**.

2.4.5 Vegetative Soil Layer

On the basis of the 2 foot thick vegetative soil layer required for the landfill final cover, the in-place volume required for each landfill unit is shown in **Table 2.7**.

2.4.6 Soil Summary

The above on-site and off-site soil quantities are summarized in **Table 2.8**. Note that, based on the proposed base grades, long-term there is a soil deficit, which will be made up from off-site sources.

2.5 FACILITY DESIGN CRITERIA

2.5.1 MSW Landfill Units

The Johnston County MSW landfill base liner and final cover systems will be constructed in accordance with Section .1624 (b)(8)(9) of the North Carolina Administrative Code, Title 15A, Chapter 13, Subchapter 13B including the following requirements.

2.5.1.1 Horizontal Separation Requirements

The horizontal separation requirement between the disposal boundary (edge of waste) and the property lines is a minimum of 300 feet, the minimum buffer between private residences and wells and the disposal boundary is 500 feet, and the minimum buffer between any surface water (stream, river, creek) and the disposal boundary is 50 feet. The proposed design satisfies all buffer requirements.

2.5.1.2 Vertical Separation Requirements

The post-settlement bottom elevation of the base liner system will meet the minimum requirement of four feet above the seasonal high groundwater table and bedrock.

2.5.2 C&D Landfill Units

The Johnston County C&D landfill is designed and operates in accordance with Sections .0503 and .0505 of the North Carolina Administrative Code, Title 15A, Chapter 13, Subchapter 13B including the following requirements.

2.5.2.1 Horizontal Separation Requirements

The horizontal separation requirement between the disposal boundary (edge of waste) and the property lines is a minimum of 50 feet (actually $\geq$ 100 feet per Solid Waste Section policy), the minimum buffer between private residences and wells and the disposal boundary is 500 feet, and the minimum buffer between any surface water (stream, river, creek) and the disposal boundary is 50 feet. In that Area 2 will partially overlie the closed Phase 3 MSW landfill unit, the Area 2 landfill unit has been designed to meet current DWM setback and horizontal buffer requirements for MSW landfills (see above)

2.5.2.2 Vertical Separation Requirements

The Area 2 subgrade has been designed to meet the minimum requirement of four feet above the seasonal high groundwater table (State rules) and bedrock (Solid Waste Section policy).

2.6 CONTAINMENT AND ENVIRONMENTAL CONTROL SYSTEMS

Technical specifications and construction quality assurance requirements for the materials used in the Area 2 construction can be found in **Attachments B and C**, respectively. Geosynthetics used in the Area 2 construction are discussed in greater detail in **Section 3.0** (Geosynthetics Design) of this document.

2.6.1 Landfill Subgrade and Perimeter Berms

The landfill subgrade elevations for lined landfill units have been designed for minimum post-settlement slopes of 2 percent (NCAC .1624(b)(7)). The subgrade elevations will be achieved by excavation or placement of compacted structural fill (embankment). During excavation, a determination of unsuitable soils (i.e. soils which are too soft, wet, or organic) will be made. Where unsuitable soils are found, the soils will be undercut and backfilled with structural fill. Some areas may also require placement of a bridge lift prior to placement of structural fill.

In addition to providing the liner foundation in fill areas, structural fill will be used for berm and roadway construction. Structural fill will consist of on-site soils removed during excavation of the landfill units or imported borrow soils, except that no CH, OL, or OH soils will be allowed.

2.6.2 Base Liner System

The following is a general discussion of the base liner systems for MSW landfill units and lined C&D landfill units. The specific design requirements are discussed in the permit applications for each individual unit.

2.6.2.1 MSW Landfill Units

The base liner areas for Phase 4A - Cell 3, and Phases 6-10 are shown on **Drawing S2** (Site Development Plan - Base Grades). The base liner will consist of either a standard composite liner system or an alternative liner system as allowed under North Carolina regulations. The components of this liner system will consist of the following components (bottom-up):

Standard Liner System - Phases 6-10:

- a 24 inch thick compacted soil liner with a permeability of no more than 1×10^{-7} cm/sec.;
- a 60 mil HDPE geomembrane liner; and
- a leachate collection system (LCS) consisting of natural and/or geosynthetic drainage media and collection piping.

OR

Alternative Liner System - Phase 4A - Cell 3:

- a 40 mil LLDPE geomembrane liner;
- a drainage geocomposite (leak detection system);
- a geosynthetic clay liner (GCL);
- a 60 mil HDPE geomembrane liner; and
- a LCS (components as listed above for the standard liner system).

Alternative Liner System - Phases 6-10:

- an 18 inch thick compacted soil liner with a permeability of no more than 1×10^{-5} cm/sec.;
- geosynthetic clay liner (GCL);
- a 60 mil HDPE geomembrane liner; and
- a LCS (components as listed above for the standard liner system).

2.6.2.2 Lined C&D Landfill Units

The base liner area for Area 2 is shown on **Drawing S5** (Area 2 - Composite Liner Grading and Leachate Collection System Plan). Area 2 will have a liner system consisting of the following components (bottom-up):

Type 1:

- a 12 inch thick compacted soil liner with a permeability of no more than 1 x 10^{-5} cm/sec.;
- a 40 mil LLDPE geomembrane liner; and
- a leachate collection system (LCS) consisting of:

  Base and Side Slopes:
  - a drainage geocomposite;
  - a system of collection pipes and gravel columns.

OR

Type 2:

- a 12 inch thick layer of structural fill (no permeability criteria);
- a geosynthetic clay liner (GCL);
- a 40 mil LLDPE geomembrane liner; and
- a LCS (components as listed above for the Type 1 liner system).

The compacted soil liner (if used) will consist of compacted on-site or imported borrow soils. The compacted soil liner will be placed and compacted in 6 inch lifts to achieve the required permeability and strength requirements.

The GCL (if used) will consist of a layer of sodium bentonite bonded between two geotextiles. The GCL will provide a maximum hydrated permeability of 5 x 10^{-9} cm/sec.

The geomembrane components of the liner systems will consist of a 40 mil thick Linear Low Density Polyethylene (LLDPE) synthetic liner (Phase 4A - secondary geomembrane; Area 2 - primary geomembrane) and/or a 60 mil thick High Density Polyethylene (HDPE) synthetic liner (Phase 4A and Phases 6-10 - primary geomembrane). These geomembranes will be installed by a qualified contractor.

For the Area 2 C&D landfill unit, all geosynthetics have been selected to comply with the performance requirements identified in **Section 3.0** (Geosynthetics Design) as well as the Specifications presented in **Attachment B**.

Note that, for the purposes of this report and the calculations of volumes, the above listed Type 1 liner (Area 2 C&D) and alternative liner system (Phase 4A - Cell 3 and Phases 6-10) have been assumed. It is possible that a different alternative liner system will be proposed at a future date for future areas.

2.6.3 Leachate Collection System (LCS)

The LCS will be constructed directly above the geomembrane on both the base and side

slopes of the landfill. Components of the LCS will be as listed above (see **Section 2.6.2**). The LCS functions to collect leachate as quickly as is practical and to conduct the fluid out of the landfill via the sumps. The goal of the LCS is to minimize the hydraulic head acting on the liner, thereby reducing the leak potential. For the Area 2 C&D landfill unit, a detailed discussion of the LCS can be found in **Section 4.0** (Leachate Management System Design).

2.6.4 Protective Cover

A protective cover layer of soil or stone may be used as the upper component of the LCS. For the Area 2 C&D landfill unit, 24 inches of protective cover soil will be placed over the drainage geocomposite. Where soil is used, a separator/filter geotextile is required between drainage aggregate and the soil.

2.6.5 Stormwater/Leachate Separation System

In order to increase facility operating efficiency by reducing the leachate treatment quantities, stormwater/leachate separation is planned for each landfill unit. Leachate is considered to be any precipitation or fluid that comes in direct contact with the waste. This liquid will be collected by the LCS and pumped to the leachate storage lagoon. Precipitation that falls in areas where it does not contact waste, such as within inactive areas, does not have to be treated as leachate. This fraction of the precipitation is treated as stormwater - that is, treated for removal of sediment only.

For disposal areas that have waste placed in them, precipitation is allowed to percolate or run-off into the LCS. For areas that have no waste, the percolation or run off to the sump where a pump conducts the water to a perimeter drainage structure. This runoff does not contact waste or leachate. At their discretion, the County may also employ the use of geosynthetic rain cover (GRC) to further segregate leachate and stormwater. The GRC, if used, is removed and discarded as each portion of an area is placed into active operation. For additional discussion of the leachate-stormwater separation system, see the Operations Manual (**Attachment D**).

2.6.6 Final Cover System

As a minimum, the components of the final cover system (bottom up) will consist of a 6 to 12 inch foundation layer (daily or intermediate cover), 30 mil textured LLDPE geomembrane, drainage geocomposite (pore pressure reduction), and a 24 inch thick vegetative soil layer which includes a 6 inch thick topsoil layer. For the MSW landfill units, this system differs from the standard regulatory final cover in that an 18 inch layer of 1×10^{-5} cm/sec soil below the geomembrane is removed and the drainage geocomposite is added above the geomembrane. The addition of the drainage geocomposite reduces head on the geomembrane for both reduced infiltration through the geomembrane and increased stability of the overlying soil veneer.

For the Area 2 C&D landfill unit, a detailed discussion of final cover system design can be found in **Section 5.0** (Final Cover System Design).

2.6.7 Erosion and Sedimentation Control

Erosion and sedimentation control structures provided will be designed and maintained to manage the run-off generated by the 24-hour, 25-year storm event, and conform to the requirements of the North Carolina Sedimentation Pollution Control Law (15A, NCAC, 4).

For the Area 2 C&D landfill unit, a detailed discussion of site erosion and sedimentation control can be found in the Project Erosion And Sedimentation Control Plan (**Attachment E**).

2.6.8 Landfill Gas Control

2.6.8.1 MSW Landfill Units

Landfill gas (LFG) control will consist of a series of vertical wells and/or collector trenches which are connected to passive vents or utility flares or to an active gas extraction system. The selected system will be designed to limit the gas pressures on the final cover geosynthetics.

Note that the volume of waste projected in the Phase 4A - Cell 3 unit will cause the total volume of MSW waste at the facility to exceed the 2.75 million ton threshold of the EPA's New Source Performance Standards (NSPS) on landfill gas emissions and will, therefore, bring this facility under these guidelines. In accordance with State requirements, a Title V air quality permit application will be made once the Phase 4A - Cell 3 unit receives its Permit to Operate. The final design will be made as part of the required Collection and Control System Design Plan.

2.6.8.2 C&D Landfill Units

For the Area 1 C&D landfill unit, which overlies the closed unlined Phase 4 MSW landfill unit, LFG control will consist of a series of vertical wells and/or collector trenches which are connected to passive vents or utility flares or to an active gas extraction system. The selected system will be designed to limit the gas pressures on the final cover geosynthetics. Likewise, a series of collector trenches has been designed to be placed under the portion of the Area 2 C&D landfill unit which overlies the Phase 3 unlined MSW landfill unit. Due to the limited amount of LFG expected from the C&D waste, no LFG control features are planned as part of the Area 2 final cover system.

Also refer to the facility Operations Manual (**Attachment D**) for a discussion of LFG

monitoring and record keeping requirements.

2.6.9 Access and Roadways

The site has been designed to provide all-weather access to active areas as well as areas under intermediate cover. Access ramps into the lined areas will be provided where necessary.

2.7 SLOPE STABILITY AND SETTLEMENT

The slope stability of the overall waste mass and perimeter berms, the protective cover veneer, and the final cover veneer, as well as estimates of foundation settlement are addressed in **Attachment F**. Slope stability analyses indicated that the proposed Area 2 landfill configuration will be stable. Veneer stability analyses on the liner system side slopes and final cover showed that for maximum slopes, these areas will be stable.

2.8 LEACHATE MANAGEMENT

The general leachate management system includes the collection, storage, treatment (if required), and disposal of the leachate generated. The collection and transmission of leachate to the on-site storage lagoon will be as described above. From the storage lagoon, the leachate will be pumped via force main on a regular basis to a local wastewater treatment plant (WWTP) for disposal. Pretreatment, if required, will be employed on-site to meet the standards for disposal into the WWTP.

For the Area 2 C&D landfill unit, a detailed discussion of the leachate management system, including anticipated leachate volumes, can be found in **Section 4.0** (Leachate Management System Design).

2.9 SPECIAL ENGINEERING FEATURES

Special engineering features proposed for Area 2 includes an alternative liner system.

2.9.1 Alternative Liner Systems

Alternative liner systems, as described above, are proposed for use at the facility due to the lack of 1×10^{-7} cm/sec soil on-site.

TABLE 2.1A
PROJECTED (COUNTY-ONLY) MSW TONNAGES

Year	Population	Projected Annual MSW Tonnage	Projected Average Monthly MSW Tonnage	Projected Monthly Variance (± 20%)
2005	145,968	108,751	9,063	7,250 - 10,875
2006	150,557	112,169	9,347	7,478 - 11,217
2007	155,226	115,648	9,637	7,710 - 11,565
2008	159,970	119,182	9,932	7,945 - 11,918
2009	164,801	122,782	10,232	8,185 - 12,278
2010	169,566	126,332	10,528	8,422 - 12,633
2011	173,978	129,619	10,802	8,641 - 12,962
2012	178,498	132,986	11,082	8,866 - 13,299
2013	183,133	136,440	11,370	9,096 - 13,644
2014	187,923	140,008	11,667	9,334 - 14,001
2015	192,811	143,650	11,971	9,577 - 14,365
2016	197,748	147,328	12,277	9,822 - 14,733
2017	202,850	151,129	12,594	10,075 - 15,113
2018	208,113	155,050	12,921	10,337 - 15,505
2019	213,560	159,109	13,259	10,607 - 15,911
2020	218,946	163,121	13,593	10,875 - 16,312
2021	223,754	166,703	13,892	11,114 - 16,670
2022	228,689	170,380	14,198	11,359 - 17,038
2023	233,760	174,158	14,513	11,611 - 17,416
2024	239,003	178,064	14,839	11,871 - 17,806
2025	244,330	182,033	15,169	12,136 - 18,203
2026	249,653	185,999	15,500	12,400 - 18,600
2027	255,141	190,088	15,841	12,673 - 19,009
2028	260,783	194,291	16,191	12,953 - 19,429
2029	266,606	198,629	16,552	13,242 - 19,863
2030	271,075	201,959	16,830	13,464 - 20,196

Year	Population	Projected Annual MSW Tonnage	Projected Average Monthly MSW Tonnage	Projected Monthly Variance (± 20%)
2031	275,619	205,344	17,112	13,690 - 20,534
2032	280,239	208,786	17,399	13,919 - 20,879
2033	284,937	212,286	17,691	14,152 - 21,229
2034	289,713	215,845	17,987	14,390 - 21,584
2035	294,569	219,463	18,289	14,631 - 21,946
2036	299,507	223,142	18,595	14,876 - 22,314
2037	304,527	226,882	18,907	15,125 - 22,688
2038	309,632	230,685	19,224	15,379 - 23,069
2039	314,822	234,552	19,546	15,637 - 23,455
2040	320,099	238,484	19,874	15,899 - 23,848
2041	325,465	242,481	20,207	16,165 - 24,248
2042	330,921	246,546	20,545	16,436 - 24,655
2043	336,468	250,679	20,890	16,712 - 25,068
2044	342,108	254,881	21,240	16,992 - 25,488
2045	347,843	259,153	21,596	17,277 - 25,915
2046	353,673	263,497	21,958	17,566 - 26,350
2047	359,602	267,914	22,326	17,861 - 26,791
2048	365,630	272,405	22,700	18,160 - 27,241
2049	371,758	276,971	23,081	18,465 - 27,697
2050	377,990	281,614	23,468	18,774 - 28,161
2051	384,326	286,335	23,861	19,089 - 28,663
2052	390,768	291,134	24,261	19,409 - 29,113
2053	397,319	296,014	24,668	19,734 - 29,601
5054	403,979	300,976	25,081	20,065 - 30,098
2055	410,751	306,021	25,502	20,401 - 30,602

TABLE 2.1B
PROJECTED (COUNTY-ONLY) C&D TONNAGES

Year	Population	Projected Annual C&D Tonnage	Projected Average Monthly C&D Tonnage	Projected Monthly Variance (± 20%)
2005	145,968	31,233	2,603	2,082 - 3,123
2006	150,557	32,215	2,685	2,148 - 3,221
2007	155,226	33,214	2,768	2,214 - 3,321
2008	159,970	31,229	2,852	2,282 - 3,423
2009	164,801	35,262	2,939	2,351 - 3,526
2010	169,566	36,282	3,024	2,419 - 3,628
2011	173,978	37,226	3,102	2,482 - 3,723
2012	178,498	38,193	3,183	2,546 - 3,819
2013	183,133	39,185	3,265	2,612 - 3,918
2014	187,923	40,210	3,351	2,681 - 4,021
2015	192,811	41,256	3,438	2,750 - 4,126
2016	197,748	42,312	3,526	2,821 - 4,231
2017	202,850	43,404	3,617	2,894 - 4,340
2018	208,113	44,530	3,711	2,969 - 4,453
2019	213,560	45,695	3,808	3,046 - 4,570
2020	218,946	46,848	3,904	3,123 - 4,685
2021	223,754	47,877	3,990	3,192 - 4,788
2022	228,689	48,933	4,078	3,262 - 4,893
2023	233,760	50,018	4,168	3,335 - 5,002
2024	239,003	51,139	4,262	3,409 - 5,114
2025	244,330	52,279	4,357	3,485 - 5,228
2026	249,653	53,418	4,452	3,561 - 5,342
2027	255,141	54,593	4,549	3,640 - 5,459
2028	260,783	55,800	4,650	3,720 - 5,580
2029	266,606	57,046	4,754	3,803 - 5,705
2030	271,075	58,002	4,833	3,867 - 5,800

TABLE 2.2A
TOTAL OPERATING CAPACITY AND LIFE EXPECTANCY - MSW LANDFILL UNITS

Landfill Unit	Area (Acres)	Gross Capacity (CY)	Net (Waste) Capacity (CY/Tons)	Life Expectancy (Years)
Unlined Landfill Units				
Phase 1/2	22.1	732,363	495,790 CY 297,474 Tons	Closed
Phase 3	25.4	1,174,139	819,136 CY 491,482 Tons	Closed
Phase 4	37.3	1,631,731	1,133,533 CY 680,120 Tons	Closed
Total (Unlined):	84.8	3,538,233	2,448,459 CY 1,469,076 Tons	Closed
Lined (Subtitle D) Landfill Units				
Phase 5	19.2	1,087,199	884,625 CY 514,181 Tons	Inactive
Phase 4A (Cells 1&2)	22.0	1,086,783	923,766 CY 521,078 Tons	1.6 - 2.6[1]
Phase 4A (Cell 3)	7.4	1,426,682	1,117,815 CY 782,471 Tons	2.8 - 6.1
Phase 6	21.1	1,402,016	1,163,319 CY 697,992 Tons	2.5 - 4.8
Phase 7	19.8	1,758,991	1,456,422 CY 873,853 Tons	3.0 - 5.3
Phase 8	25.2	1,844,867	1,482,308 CY 889,385 Tons	2.9 - 4.8
Phase 9	22.5	6,684,914	5,599,252 CY 3,919,476 Tons	11.8 - 17.2
Phase 10	17.5	3,075,968	2,508,093 CY 1,755,665 Tons	4.8 - 5.5
Total (Lined):	154.7	18,367,420	15,135,600 CY 9,954,101 Tons	29.4 - 46.3
Total (Overall):	239.5	21,905,653	17,584,059 CY 11,423,177 Tons	29.4 - 46.3

Notes:
1. Life expectancies for the active Phase 4A - Cells 1 & 2 shown above is from 3/21/05.

TABLE 2.2B
TOTAL OPERATING CAPACITY AND LIFE EXPECTANCY - C&D LANDFILL UNITS

Landfill Unit	Area (Acres)	Gross Capacity (CY)	Net (Waste) Capacity (CY/Tons)	Life Expectancy (Years)
Area 1	16.2	572,734	479,645 CY 289,285 Tons	2.0 - 2.4[1]
Area 2 - Cell 1	11.3	451,611	389,897 CY 233,938 Tons	5.5 - 6.4
Area 2 - Cell 2	4.5	462,658	387,062 CY 232,237 Tons	4.6 - 5.3
Total:	32.0	1,487,003	1,256,604 CY 755,460 Tons	11.9 - 14.2

Notes:
1. Life expectancy for the active Area 1 unit shown above is from 3/21/05.

TABLE 2.3
GENERAL EARTHWORK QUANTITIES

Landfill Unit[1]	Cut (CY)	Fill (CY)
MSW Landfill Units		
4A - Cell 3	362	3,275
Phase 6	279,493	55,613
Phase 7	222,037	85,202
Phase 8	242,630	105,976
Phase 9	68,999	178,758
Phase 10	151,736	21,326
C&D Landfill Units		
Area 2	44,610	77,952

Notes:
1. Includes site roads and infrastructure.

TABLE 2.4
SOIL LINER QUANTITIES

Landfill Unit	Required Volume (CY)
MSW Landfill Units	
Phase 6	51,062
Phase 7	47,916
Phase 8	60,984
Phase 9	54,450
Phase 10	42,350
C&D Landfill Units	
Area 2[1]	25,491

Notes:
1. Or structural fill layer.

TABLE 2.5
LEACHATE COLLECTION SYSTEM/PROTECTIVE COVER QUANTITIES

Landfill Unit	Required Volume (CY)
MSW Landfill Units	
4A - Cell 3	23,877
Phase 6	68,083
Phase 7	63,888
Phase 8	81,312
Phase 9	72,600
Phase 10	56,467
C&D Landfill Units	
Area 2	50,981

TABLE 2.6
DAILY AND INTERMEDIATE COVER QUANTITIES

Landfill Unit	Required Volume (CY)
MSW Landfill Units	
4A - Cells 1 & 2	86,088[1]
4A - Cell 3	214,002
Phase 6	210,302
Phase 7	263,849
Phase 8	276,730
Phase 9	1,002,737
Phase 10	461,395
C&D Landfill Units	
Area 1	18,075[1]
Area 2	86,329

Notes:
1. Volumes shown above for Phase 4A Cells 1&2 and Area 1 is from 3/21/05.

TABLE 2.7
VEGETATIVE SOIL LAYER QUANTITIES

Landfill Unit	Required Volume (CY)
MSW Landfill Units	
Phase 4A	94,864
Phase 5	61,952
Phase 6	68,083
Phase 7	63,888
Phase 8	81,312
Phase 9	72,600
Phase 10	56,467
C&D Landfill Units	
Area 1	35,816
Area 2	50,981

TABLE 2.8
SOIL SUMMARY

Material	Quantity (CY)
Excavation	1,009,867
Structural Fill	(528,102)
Soil Liner	(282,253)
LCS/Protective Cover[1]	(417,208)
Daily/Intermediate Cover	(2,619,507)
Vegetative Soil Layer	(585,963)
Total[2]:	(3,423,166)

Notes:

1. A portion of this material will come from off-site sources.
2. Soil deficit shown will be made up from off-site sources.

SECTION 3.0
GEOSYNTHETICS DESIGN

3.1 OVERVIEW

This section addresses the design and selection of the geosynthetics to be incorporated into Area 2. The geosynthetic requirements are outlined in detail in the Project Specifications (**Attachment B**) and Project Drawings (**Attachment G**).

3.2 GEOSYNTHETIC COMPONENTS AND DESIGN PARAMETERS

3.2.1 Geosynthetic Clay Liner (GCL)

A GCL will be used as a barrier layer in the Type 2 base liner system. The selected material for the GCL will consist of a layer of sodium bentonite bonded between two geotextiles. The selected GCL will provide a maximum hydrated permeability of 5×10^{-9} cm/sec and will be reinforced to prevent potential shearing in the bentonite layer. The GCL also offers the addition of self healing capabilities, there is no required seaming, and the bentonite has a high cation exchange rate.

3.2.2 Base Geomembrane

The selected material for the base geomembrane is 40 mil thick textured Linear Low Density Polyethylene (LLDPE). The particular product to be installed will be approved for use in the facility prior to construction.

The design of Area 2 as well as its construction and CQA procedures are all intended to reduce unusually high puncture, impact, or tearing stresses on the geomembrane. Due to the selection of textured LLDPE geomembrane on facility side slopes, all interface friction angles for geosynthetics are expected to be greater than the 3H:1V side slope angle. Thus, negligible stresses will be placed on geosynthetics and the system will be stable. In addition, **Attachment F** includes an analysis which demonstrate that the anticipated tensile stresses in the liner system due to settlement of underlying subgrade will be minimal.

The anchor trench size (i.e. depth and width) was selected to allow pullout of the geomembrane before the yield stress is achieved (see calculations in **Appendix A**). In this way, the anchor trench provides sufficient resistance to prevent pullout during anticipated loading conditions. Large scale yielding or tearing of the geomembrane is, however, prevented under extreme loading conditions since the geomembrane is designed to pull out of the anchor trench rather than yield.

3.2.3 Drainage Geocomposite

The drainage geocomposite will consist of a polyethylene drainage net (geonet) bonded

on both sides with a nonwoven, needle-punched geotextile. This material will be used in the LCS of the base liner system (landfill base and side slopes) and in the final cover system (pore pressure reduction layer).

The Project Specifications (**Attachment B**) require a minimum transmissivity of 7.5 x 10^{-4} $m^3/m/sec$ and 1 x 10^{-3} $m^3/m/sec$ for the base liner and final cover systems, respectively, which account for long-term reduction factors and an overall factor of safety. **Appendix A** contains an analysis of the drainage geocomposite to be used in the LCS (see Leachate Collection Pipe Spacing calculations) and final cover drainage layer.

3.2.4 Separator (Type GT-S) Geotextile

A nonwoven separator (Type GT-S) geotextile (optionally a woven geotextile) will be used as a separator in several applications. A Type GT-S geotextile will be used as a separator between leachate collection media and soil protective cover (where used), in facility roadways, and in some erosion control applications. This geotextile will be selected to minimize soil migration while allowing free flow of water.

The geotextiles to be incorporated into the construction of Area 2 that function as separators were evaluated for particle loss potential using conservative filter/retention matching criteria. The geotextile must prevent large scale migration of soil particles into the underlying drainage media while at the same time not clogging. Separator criteria were applied to geotextiles that protect the natural or geosynthetic drainage media from the soil protective cover (or vegetative soil layer in the final cover system). Calculations presented in **Appendix A** indicate a very low soil loss potential exists for the geotextile between drainage media and soil protective cover. Due to the low hydraulic head requirement of the Area 2 design, high gradients within the leachate collection system (LCS) are improbable (likewise in the final cover system). The specified opening size of the separator geotextile selected is considered adequate to provide protection against excessive soil piping.

3.2.5 Geosynthetic Rain Cover (GRC)

The GRC will consist of a thin geomembrane. The GRC will be used at the option of the County to prevent stormwater infiltration through the protective cover and the gravel columns of the LCS in inactive cells. Where used, the GRC will be removed by operations personnel prior to activation of an individual disposal area or portion thereof.

3.2.6 Final Cover Geomembrane

A geomembrane will be used as the barrier layer in the final cover system. The selected material for the final cover geomembrane is a 30 mil thick textured Linear Low Density Polyethylene (LLDPE) geomembrane. The particular product to be installed will be approved for use in the facility prior to construction.

SECTION 4.0
LEACHATE MANAGEMENT SYSTEM DESIGN

4.1 OVERVIEW

The leachate management system for the proposed landfill consists of the leachate collection system (LCS), the leachate discharge piping, pumps, valves, and leachate storage lagoon. The LCS consists of natural and/or geosynthetic drainage media on the base and side slopes of the landfill as well as a collection pipe network and a sump with side riser pumps. All major collection/discharge piping of the Area 2 leachate management system will be high density polyethylene (HDPE) piping. HDPE piping was selected due to its favorable behavior when exposed to a variety of chemical leachates and its ability to be welded together to create a leak-free conduit (solid wall piping).

This section addresses the hydraulic and mechanical design of the leachate management system. Each of the major components of the system are covered separately.

4.2 LEACHATE COLLECTION SYSTEM (LCS)

The LCS will be constructed directly above the geomembrane on both the base and side slopes of the landfill. Components of the LCS will be as follows:

- a drainage geocomposite; and
- a 24-inch thick layer of protective cover soil.

Also part of the LCS is a series of perforated collection pipes. Collection pipes have coarse aggregate placed over and around them and are referred to as "gravel columns" (see **Drawing S5** (Area 2 - Composite Liner Grading and Leachate Collection System Plan)). These gravel columns provide a significant amount of storage, provide primary leachate removal capacity, and are designed to be resistant to biological clogging. Since the gravel column aggregate extends through the protective cover and is in direct contact with the waste (no geotextile is placed between the waste and gravel), the long-term clogging potential is significantly reduced. Cleanout ports are provided, where possible, at the end of leachate collection piping along the perimeter berm to allow periodic hydro-washing of the piping when necessary.

The collection piping of the LCS conducts the leachate to the sumps for the removal from the landfill by side riser pumps. Sumps are filled with coarse aggregate in order to maximize storage and fluid removal rates. From the sumps, the leachate will be pumped to the leachate storage lagoon via an HDPE force main.

4.2.1 <u>LCS Pipe Spacing</u>

Spacing of the LCS collection pipes is selected to ensure that the maximum hydraulic head on the base geomembrane is less than 1 foot during normal operating conditions. The analysis (see **Appendix A**) was conducted using McEnroe's mounding equations.

For this analysis, an impingement rate equal to the assumed average daily flow under active conditions (1,200 gallons/acre/day) was used (Note that this is a higher value than predicted by the HELP Model.). The analysis conservatively includes reduction factors for intrusion, creep deformation, chemical clogging, and biological clogging plus an overall factor of safety.

Assuming a maximum allowable leachate head of 1 foot, various bottom slopes, and actual pipe spacings, it was determined that all conditions will produce less than 1 foot of hydraulic head on the base geomembrane (Note that for the drainage geocomposite actual maximum heads will remain within the thickness of the geonet drainage core << 1 foot).

Based on the pipe spacing calculations, a minimum transmissivity of 7.5×10^{-4} $m^3/m/sec$ was selected for the drainage geocomposite component of the LCS.

4.2.2 LCS Pipe Sizing

The capacity of LCS piping was evaluated by comparing the maximum capacity of a 6-inch pipe diameter with the peak daily leachate generation rate (14,000 gallons/acre/day) (see **Attachment C**). Based on this evaluation, either a 6-inch diameter HDPE (SDR 17) (I.D. = 5.8-inches) will handle a maximum drainage area of 17 acres with a factor of safety of 2.0. This maximum drainage area exceeds the maximum drainage area to be drained by any one pipe.

4.2.3 LCS Pipe Mechanical Properties

The LCS collection pipes will be perforated HDPE pipe. The required pipe standard dimension ratio (SDR) (ratio of outside pipe diameter to wall thickness) was selected based upon anticipated static and dynamic load conditions both during and after construction. Both the static and dynamic criteria are discussed briefly below. Pipe stress analyses for HDPE pipe are presented in **Appendix A**.

4.2.3.1 Static Load Requirement

The vertical stress applied by the fully constructed landfill, including waste and final cover, was used to calculate the required SDR. Calculations were performed for both crushing and buckling.

The analyses for static loading were performed using the highest normal compressive stress computed for the facility (approximately 73 psi assuming a maximum waste/cover thickness of $\pm$150 feet and a waste density of 70 pcf). The selected SDR of 17 has a factor of safety greater than 2.0 for both crushing and buckling under maximum static loading conditions.

4.2.3.2 Equipment Loading (Dynamic Load Requirement)

During construction of the LCS, it may be necessary for certain construction equipment to operate over the pipe while the LCS is being placed. Under this worst case condition, a dynamic impact factor of 1.5 was used to account for equipment loading. Under no circumstances should tracked vehicles allowed to turn when operating over the pipe.

For analysis, typical construction and operations equipment were selected for calculation of dynamic crushing loads.

On the basis of the selected SDR, the following equipment limitations will be employed:

- Placement of the protective cover and No. 57 stone (18 inch minimum cover (including gravel column) over LCS piping) - low ground pressure (LGP) equipment only.

- Placement of initial lift of waste (with 3 foot minimum cover (including gravel column) over LCS piping) - no equipment limitations.

4.3 LEACHATE DISCHARGE AND STORAGE SYSTEM

Leachate from the Area 2 LCS is collected in the leachate sump as shown on **Drawing S7** (Leachate Forcemain Plan and Profile). The leachate collected in the sump is pumped to the leachate storage lagoon via a HDPE forcemain.

4.4.1 Leachate Sump

The typical sump and side riser layout is shown on **Drawing LM2** (Leachate Management System Details - Sheet 2 of 3). As designed, each sump has a storage capacity of over 2,000 gallons (accounting for 30% porosity in the stone). Two side riser pumps will be used in the leachate sump. The pumps selected for this application will be rated at a minimum flow of 75 to 100 gpm. The pumps and control system will include alarms for power outage, high level, and no-flow conditions. A flow meter will be included to monitor leachate production. During normal operations, the pumps will alternate to reduce wear on one particular pump. Under high flow conditions, both pumps will operate in tandem to keep the head on the liner system to a minimum.

4.3.2 Leachate Discharge Piping

The leachate discharge piping consists of HDPE (SDR 17) pipe. The required pipe SDR was selected as described above for the LCS based upon the maximum static and dynamic loading conditions to be placed on the pipe. Pipe stress analyses for HDPE pipe

are presented in **Appendix A**.

4.3.3 Leachate Storage Lagoon

Leachate from Area is routed to the existing leachate storage lagoon which has a capacity of approximately 4,300,000 gallons (not including 2 feet of freeboard). The leachate storage lagoon is lined with a composite liner system consisting of 24 inches of compacted clay liner ($k \leq 1 \times 10^{-7}$ cm/sec) overlain by a 60 mil HDPE geomembrane and a 6 inch Fabri-Form concrete liner. The lagoon drains to an existing pump station. From this pump station, the leachate is either pumped back to the leachate recirculation system injection trenches in Phase 5 or pumped via a 4 inch PVC forcemain to a local wastewater treatment plant (WWTP) owned and operated by Johnston County.

4.4 LEACHATE PRETREATMENT

Pretreatment of the leachate may be required in order to discharge to the local WWTP. Experience with new lined landfills indicates that leachate pretreatment is generally not required during the initial three plus years of landfill operations. The majority of the leachate generated during this time comes from precipitation that has had little contact with waste. Under these conditions, the only pretreatment that may be required is pH buffering by addition of lime.

As the landfill becomes mature, the concentrations of constituents in the leachate will increase - although the leachate volume may decrease with time. At this point the County may add a pretreatment system if required by the WWTP. As future flow volumes and quality dictates, additional units can easily be added to the pretreatment system.

It should be noted that as Federal and State mandated waste screening and prohibition is continued (e.g. for lead acid batteries, household hazardous waste, etc.) the impact on leachate quality is expected to reduce the future potential need for pretreatment.

4.5 LEACHATE GENERATION

The leachate management system for Area 2 has been designed to minimize head on the liner system and to maximize effective operations. The leachate generation rate for the landfill is heavily dependent on the following:

- Design storm event(s);
- Amount of waste in the cell; and
- Method of landfill operations.

An evaluation of leachate generation rates was performed to estimate flow rates during active, interim, and closed conditions (see **Appendix A**). The Hydrologic Evaluation of Landfill Performance (HELP) Model (version 3.07) was used to confirm the volume of leachate anticipated during these three discrete phases. It was found that the HELP Model values were similar or somewhat lower than empirical generation rates for these conditions which are based

upon actual data. Thus, the empirical rates were applied to the proposed operational conditions to yield leachate generation rates for various stages of landfill development.

In order to determine typical leachate flow rates, empirical daily leachate generation values of 1,200 gallons per acre per day (gpapd) for active, 500 gpapd for interim, and 100 gpapd for final were applied to the proposed operational scenarios. Each operational scenario is basically a "snapshot" developed to depict the typical combination of areas which are being operated, under active, interim, and final cases.

In order to simulate a "surge" volume, the precipitation event of 3.2 inches for a 1-year, 24-hour storm was applied over up to a three acre open area of the landfill and added to the leachate being produced under active, interim, and final conditions. The 1-year recurrence interval was selected since it is a conservative representation of the timeframe that an area will be open and only partially filled across the bottom. As shown by the calculations, the flow rate with the 1-year, 24-hour storm event is estimated at approximately 300,000 gallons. This should be considered as a "worst case" scenario. Once covered by waste, the potential for a "surge" event in the landfill is essentially eliminated due to the ability of the waste to absorb and slowly release precipitation. The more typical flow rate for Area 2 operations is anticipated to be less than 50,000 gallons per day (includes flow from Phase 4A and Phase 5).

The ability to prevent ponding in the landfill rests on the ability to hold leachate in the storage lagoon. As noted above, the capacity of the storage lagoon is approximately 4,300,000 gallons, which is much greater than the total volume of leachate that can be generated by the "surge" event. This means that little to no ponding of leachate will occur in the landfill when the lagoon can handle the entire design storm.

In order to minimize the ponding potential in the landfill, the County will remove leachate from the storage lagoon at a rate to maintain a typical volume of 3,000,000 gallons (approximate 6 foot depth), or less, of leachate in the lagoon until all areas are covered by waste.

SECTION 5.0
FINAL COVER SYSTEM DESIGN

5.1 OVERVIEW

This section addresses the design of the final cover system for the proposed Area 2 landfill unit. The final cover incorporates a landfill gas (LFG) management system, a barrier system, surface water infiltration/pore pressure reduction layer, and a vegetative soil layer.

Technical specifications and CQA requirements for final cover system components are included in **Attachments B and C**, respectively. Slope stability calculations for the final cover veneer are presented in **Attachment F**.

5.2 DESCRIPTION OF COMPONENTS

The main functions of the final cover are:

- Minimize infiltration into the waste.
- Function with a minimum of maintenance over the life of the landfill.

Each component is described below. Refer to **Drawings FC1, FC2, and FC3** which display the final cover grades for Area 2 and typical final cover details which illustrate the final cover components.

5.2.1 Intermediate Cover

The intermediate cover is a nominal 1 foot thick layer of soil that is placed over waste that has been filled to proposed finished grades. This cover layer separates the waste from and provides a foundation for the overlying geosynthetics. The intermediate cover will be placed by the landfill operator and will consist of on-site or imported soils. The intermediate cover will also be used for leveling or fine grading or for bridging of localized soft areas, as required.

5.2.2 Landfill Gas (LFG) Management System

Due to the limited amount of LFG expected from the C&D waste, no LFG control features are planned as part of the Area 2 final cover system.

5.2.3 Final Cover Geomembrane

The function of the final cover geomembrane is to prevent any water that infiltrates through the overlying vegetative soil layer from entering the waste and producing leachate. A 30 mil thick textured LLDPE geomembrane has been selected for this application. The design of Area 2 provides for a minimum of penetrations through the

geomembrane. The only required penetrations are for the surface water management system (down pipes).

5.2.4 Drainage Geocomposite

A layer of drainage geocomposite overlies the final cover geomembrane. The function of this layer is to conduct infiltration through the vegetative soil layer to the surface water drainage features (i.e. side slope swales, down pipes, and perimeter channels) and, thus, reduce the head on the final cover geomembrane. The selected drainage geocomposite will have adequate transmissivity to handle the expected flows (see calculations in **Appendix A**).

5.2.5 Vegetative Soil Layer

The vegetative soil layer consists of 2 feet of on-site or imported soil with at least 6 inches of topsoil. This layer functions to provide support for vegetation while undergoing a minimum of erosion. This layer will also provide protection against puncture and freezing of the underlying geosynthetics.

5.2.6 Surface Water Control Devices

Surface water runoff and its associated erosion are controlled in the final cover by a system of drainage breaks (rain gutters) that limit the distance the water flows and collects the water for conveyance (via down pipes) to one of the sediment basins. Final cover drainage devices were designed based on the peak runoff from a 50-year storm. Further descriptions and calculations related to the sizing of this system are provided in **Appendix A** and in the Project Erosion and Sedimentation Control Plan (**Attachment E**).

SECTION 6.0
LOCAL GOVERNMENT APPROVAL

6.1 OVERVIEW

The approval of the Area 2 C&D landfill unit as well as the addition and modification of proposed MSW landfill units to the landfill facility plan represent a significant change in the capacity of the landfill facility. Thus, local government approval is required.

6.2 DOCUMENTATION

Documentation of the County's enabling approvals are presented in **Appendix B**. This documentation includes the following information:

Public Meeting Information:

- Copy and documentation of Legal Advertisement of Public Meeting
- Copy of Resolution
- Minutes of Public Meeting

Letter Demonstrating Consistency with Zoning Ordinances:

- Letter from the Johnston County Planning Department

Letter Demonstrating Consistency with the City's Solid Waste Management Plan:

- Letter from the Johnston County Department of Public Utilities

Appendix A

Landfill Design Calculations

JOHNSTON COUNTY
JOHNSTON COUNTY C&D LANDFILL - AREA 2

FACILITY AND ENGINEERING PLAN
APPENDIX A: LANDFILL DESIGN CALCULATIONS

TABLE OF CONTENTS

1.0 Quantity Calculations
- 1.1 Volumes of Existing Landfill Units
- 1.2 Landfill Life Expectancy (Rev. May 2006)
- 1.3 Earthwork Quantities (Rev. May 2006)

2.0 Geosynthetics Calculations
- 2.1 Anchor Trench Sizing
- 2.2 Filter Geotextile Analysis
- 2.3 Cushion Geotextile Analysis

3.0 Leachate Management System Calculations
- 3.1 Leachate Collection Pipe Spacing
- 3.2 Leachate Collection Pipe Sizing
- 3.3 HDPE Pipe Stress Analysis
- 3.4 Evaluation of Leachate Generation Rates
- 3.5 Leachate Pump Design Calculations

4.0 Final Cover System Calculations
- 4.1 Final Cover Drainage Layer Analysis
- 4.2 Rain Gutter/Down Pipe Sizing

PROJECT Johnston County C&D Landfill - Area 2

SUBJECT Volumes of Existing Landfill Units

JOB NO. JOHNSTON-22
DATE 10/4/05
COMPUTED BY PKS
CHECKED BY

Objective To determine the volumes of existing landfill units.

Assumptions
1. Density of Waste.
2. Waste to Periodic Cover (i.e. daily and intermediate) Ratio.

Analysis The volume will be calculated by taking cross sections of the landfill, using a planimeter to measure the area of the cross sections, and using the average end area method. Alternatively, AutoCAD will be used to generate volumes.

EXISTING LF VOLUMES.WPD

G.N. RICHARDSON & ASSOCIATES
Engineering and Geological Services
14 N. Boylan Avenue, Raleigh, NC 27603
Telephone: (919) 828-0577

G.N. Richardson & Associates
Engineering and Geological Services
14 N. Boylan Avenue
Raleigh, NC 27603
Tel: 919-828-0577
Fax: 919-828-3899

SHEET: 2/10
JOB #: JOHNSTON-22
DATE: 9/8/05
BY: PKS
CHKD BY:

Johnston County Landfill
Analysis of Existing Landfill Volumes

Disposal Area	Area (Acres)	Total Gross Capacity (CY)	Total Net Capacity		Comment
			(CY)	(Tons)	
Unlined MSW Landfill Units					
Phase 1/2 (Closed)	22.1	732,363	495,790	297,474	See Attached
Phase 3 (Closed)	25.4	1,174,139	819,136	491,482	See Attached
Phase 4 (Closed)	37.3	1,631,731	1,133,533	680,120	See Attached
Total (Unlined MSW)	84.8	3,538,233	2448459	1469076	
Lined MSW Landfill Units					
Phase 5 (Inactive)	19.2	1,087,199	884,625	514,181	See Attached
Phase 4A (Cell 1) (Active) (See Note 1)	16.0	512,862	435,933	228,378	See Attached
Total (Lined MSW)	35.2	1,600,061	1,320,558	742,559	
C&D Landfill Units					
Area 1 (Vertical Expn.) (Active) (See Note 1)	16.2	391,981	352,783	213,168	See Attached
Total (C&D)	16.2	391,981	352,783	213,168	

Notes:
1. In-place volumes as of March 21, 2005.

G.N. Richardson & Associates

ENGINEERING AND GEOLOGICAL SERVICES

SHEET: 2/31
JOB #: JOHNSTON-9
DATE: 11/3/99
BY: PKS
CHKD BY: GMR

Johnston County Landfill - Phases 1/2
Existing Volume/Tonnage

Waste Parameters:

Unit Weight (pcy) =	1200	(Assumed)
Unit Weight (tcy) =	0.6	
Percentage of Periodic Cover =	25	(Assumed)
Area of Waste Footprint (Ac.) =	22.1	

Volume Calculations:

Cross Section	Separation (ft)	Area Fill (sf)	Volume Fill (cy)
0		0	
	160		45511
A		15360	
	200		134111
B		20850	
	200		165889
C		23940	
	200		185815
D		26230	
	200		144519
E		12790	
	200		54407
F		1900	
	60		2111
0		0	

FILL = 732,363 cy

Adjustment For Other Layers:

2 feet of Final Cover = 71309 cy

Sum = 71,309 cy

Volume of Waste and Periodic Cover In-Place (cy) =	661,054
Volume of Periodic Cover In-Place (cy) =	165,263
Volume of Waste In-Place (cy) =	495,790
Waste Tonnage In-Place (Tons) =	297,474

G.N. Richardson & Associates

ENGINEERING AND GEOLOGICAL SERVICES

SHEET: 3/31
JOB #: JOHNSTON-9
DATE: 11/3/99
BY: PKS
CHKD BY: GNR

Johnston County Landfill - Phase 3
Existing Volume/Tonnage

Waste Parameters:

Unit Weight (pcy) =	1200	(Assumed)
Unit Weight (tcy) =	0.6	✓
Percentage of Periodic Cover =	25	(Assumed)
Area of Waste Footprint (Ac.) =	25.4	

Volume Calculations:

Cross Section	Separation (ft)	Area Fill (sf)	Volume Fill (cy)
0		0	
	200		0
A		0	
	200		42852
B		11570	
	200		101148
C		15740	
	200		138556
D		21670	
	200		153852
E		19870	
	200		132630
F		15940	
	200		124519
G		17680	
	200		146963
H		22000	
	200		171407
I		24280	
	200		120685
J		8305	
	60		9228
0		0	
Additional 5 feet (Avg.)			32300
		FILL =	1,174,139 cy

Adjustment For Other Layers:

2 feet of Final Cover =		81957 cy
	Sum =	81,957 cy

Volume of Waste and Periodic Cover In-Place (cy) =	1,092,182
Volume of Periodic Cover In-Place (cy) =	273,045
Volume of Waste In-Place (cy) =	819,136
Waste Tonnage In-Place (Tons) =	491,482

G.N. Richardson & Associates

ENGINEERING AND GEOLOGICAL SERVICES

SHEET: 4/31
JOB #: JOHNSTON-9
DATE: 11/3/99
BY: PKS
CHKD BY: GNR

Johnston County Landfill - Phase 4
Existing Volume/Tonnage

Waste Parameters:

Unit Weight (pcy) =	1200	(Assumed)
Unit Weight (lcy) =	0.6	
Percentage of Periodic Cover =	25	(Assumed)
Area of Waste Footprint (Ac.) =	37.3	

Volume Calculations:

Cross Section	Separation (ft)	Area Fill (sf)	Volume Fill (cy)
0		0	
	140		18796
A		7250	
	200		97704
B		19130	
	200		176667
C		28570	
	200		218074
D		30310	
	200		224407
E		30280	
	200		208667
F		26060	
	200		183815
G		23570	
	200		171000
H		22600	
	200		152778
I		18650	
	200		121926
J		14270	
	200		56889
K		1090	
	50		1009
0		0	

FILL = 1,631,731 cy

Adjustment For Other Layers:

2 feet of Final Cover = 120355 cy

Sum = 120,355 cy

Volume of Waste and Periodic Cover In-Place (cy) =	1,511,377
Volume of Periodic Cover In-Place (cy) =	377,844
Volume of Waste In-Place (cy) =	1,133,533
Waste Tonnage In-Place (Tons) =	680,120

G.N. Richardson & Associates

ENGINEERING AND GEOLOGICAL SERVICES

SHEET: 1 / 2
JOB #: JOHNSTON-2
DATE: 7/15/03
BY: PKS
CHKD BY:

Johnston County MSW Landfill - Phase 5
Analysis of Waste Density

Input Parameters:

Percentage of Periodic Cover =	15	(Assumed)
Area of Waste Footprint (Ac.) =	19.2	
Quantity of Waste In-Place (Tons) =	514,181	(Per Scale Records Through 6/4/03)

Volume Calculations:

Volume (Gross) From AutoCAD =	1,087,199	cy	(See Attached) (6/4/03 vs. 1997)

Adjustment For Other Layers:

1.5 feet of Intermediate Cover =	46,464	cy
Sum =	46,464	cy

Volume of Waste and Periodic Cover (cy) =	1,040,735
Volume of Periodic Cover (cy) =	156,110
Volume (Net) of Waste (cy) =	884,625
Waste Density (tons/cy) =	0.581
Waste Density (lbs/cy) =	1,162

JC Waste Density.WB3

7/10
2/2

volume-report-070303.txt

Johnston County Phase 5 Airspace

Project: LAND PROJECTS Thu July 03 17:15:06 2003

Site Volume Table: Unadjusted

	Cut yards	Fill yards	Net yards	Method
Site: PHASE 5 AIRSPACE				
Stratum: PHASE 5 ~~BASE~~ Protective Cover GRADES TO 061603 SURVEY	19	1,087,218	1,087,199	(F) Composite

514,181.45 Tons

– Subtract 18" Int. Cur.

– Subtract ≈ 15% Cover

G.N. Richardson & Associates
Engineering and Geological Services
14 N. Boylan Avenue Tel: 919-828-0577
Raleigh, NC 27603 Fax: 919-828-3899

SHEET: 8/10
JOB #: JOHNSTON-26
DATE: 7/27/05
BY: PKS
CHKD BY:

Johnston County MSW Landfill - Phase 4A (Cells 1 & 2)
Volume Study: Filling Rate & Density Calculations

Density and Filling Rate Calculations:

Start Date	Period of Interest End Date	Total Time (years)	Volume Filled (cy)	Quantity of Waste Disposed (tons)	Waste Filling Rate* (lbs/cy)	Periodic Cover Assumed %	Periodic Cover Volume (cy)	Waste Volume (cy)	Waste Density** (lbs/cy)
1/9/2003	5/21/2004	1.36	312,843	139,098	**889**	15	46,926	265,917	**1,046**
5/22/2004	3/21/2005	0.83	200,019	89,280	**893**	15	30,003	170,016	**1,050**
			Σ= 512,862	228,378				Σ= 435,933	Avg. = **1,048**

Notes:
*Waste Filling Rate = (Tons of Waste Disposed)/(Volume Filled).
**Waste Density = (Tons of Waste Disposed)/(Volume Filled - Volume of Periodic Cover).

G.N. Richardson & Associates
Engineering and Geological Services
14 N. Boylan Avenue Tel: 919-828-0577
Raleigh, NC 27603 Fax: 919-828-3899

SHEET: 9/10
JOB #: JOHNSTON-26
DATE: 7/27/05
BY: PKS
CHKD BY:

Johnston County C&D Landfill - Area 1 (Vertical Expn.)
Volume Study: Filling Rate & Density Calculations

Density and Filling Rate Calculations:

Start Date	Period of Interest End Date	Total Time (years)	Volume Filled (cy)	Quantity of Waste Disposed (tons)	Waste Filling Rate* (lbs/cy)	Periodic Cover Assumed %	Periodic Cover Volume (cy)	Waste Volume (cy)	Waste Density** (lbs/cy)
4/1/1999	5/21/2004	5.14	343,193	187,514	**1,093**	10	34,319	308,874	**1,214**
5/22/2004	3/21/2005	0.83	48,788	25,654	**1,052**	10	4,879	43,909	**1,169**
			Σ = 391,981	213,168				Avg. =	**1,191**
								Σ = 352,783	

Notes:
*Waste Filling Rate = (Tons of Waste Disposed)/(Volume Filled).
**Waste Density = (Tons of Waste Disposed)/(Volume Filled - Volume of Periodic Cover).

10/10

volume report 072405.txt

Johnston County Landfill

Project: land projects Sun July 24 22:47:25 2005

Site Volume Table: Unadjusted

Cut yards	Fill yards	Net yards	Method

Site: AIRSPACE CHANGED AREAS

3/21/05

MSW area volume represents latest aerial topo (I didn't know the date) vs. the 052104 topo with phase 4A cell 2 grades pasted in.

If you look at the isopach, a lot of the cut occurs around the perimeter of cell 2. As expected, the majority of the fill is in cell 1.

Stratum: msw area topo-052104-cell2-paste survey-msw-area
12,817 200,019 187,202 (F) Composite
Ignore Cut

MSW remaining represents latest survey vs. phase 4A fill sequence 2, (shown in figure 2).

Stratum: msw area remaining topo-052104-changed-areas-paste phase4a-fill-seq-3
4,852 597,179 592,327 (F) Composite

C&D area volume represents the two dates, latest (date unknown) vs. 052104.

The C&D volume is straight forward, fill is on top and west side.

Stratum: cd area topo-052104-cell2-paste survey-cd-area
1,282 50,070 48,788 (F) Composite

CD remaining represents latest survey vs. final cover grades, (shown in figure 2)

Stratum: cd area remaining topo-052104-changed-areas-paste cd-fcvr-120503
7149 187902 180753 (F) Composite

PROJECT Johnston County C&D Landfill - Area 2

JOB NO. JOHNSTON-22

DATE 7/14/05

SUBJECT Landfill Life Expectancy

COMPUTED BY PKS

CHECKED BY

Objective To determine the expected life of the landfill given the proposed contours and the current loading rate.

Assumptions

1. Density of Waste.
2. Waste to Periodic Cover (i.e. daily and intermediate) Ratio.

Analysis The volume will be calculated by taking cross sections of the landfill, using a planimeter to measure the area of the cross sections, and using the average end area method. Alternatively, AutoCAD will be used to generate volumes.

LIFE.WPD

G.N. RICHARDSON & ASSOCIATES
Engineering and Geological Services
14 N. Boylan Avenue, Raleigh, NC 27603
Telephone: (919) 828-0577

G.N. Richardson & Associates
Engineering and Geological Services
14 N. Boylan Avenue
Raleigh, NC 27603
Tel: 919-828-0577
Fax: 919-828-3899

SHEET: 2/19
JOB #: JOHNSTON-22
DATE: 5/18/05
BY: PKS
CHKD BY:

Johnston County Landfill
Summary of Capacity/Life Expectancy

Landfill Unit	Area (Acres)	Gross Capacity (CY)	Net (Waste) Capacity		Life Expectancy (Years) (Min/Max)	
			(CY)	(Tons)		
Unlined MSW Landfill Units						
Phase 1/2 (Closed)	22.1	732,363	495,790	297,474	Closed	
Phase 3 (Closed)	25.4	1,174,139	819,136	491,482	Closed	
Phase 4 (Closed)	37.3	1,631,731	1,133,533	680,120	Closed	
Total (Unlined MSW)	84.8	3,538,233	2,448,459	1,469,076	Closed	
Lined MSW Landfill Units						
Phase 5 (Inactive)	19.2	1,087,199	884,625	514,181	Inactive	
Phase 4A (Cells 1 & 2) (Active) (See Note 1)	22.0	1,086,783	923,766	521,078	1.6	2.6
Phase 4A (Cell 3)	7.4	1,426,682	1,117,815	782,471	2.8	6.1
Phase 6	21.1	1,402,016	1,163,319	697,992	2.5	4.8
Phase 7	19.8	1,758,991	1,456,422	873,853	3.0	5.3
Phase 8	25.2	1,844,867	1,482,308	889,385	2.9	4.8
Phase 9	22.5	6,684,914	5,599,252	3,919,476	11.8	17.2
Phase 10	17.5	3,075,968	2,508,093	1,755,665	4.8	5.5
Total (Lined MSW)	154.7	18,367,420	15,135,600	9,954,101	29.4	46.3
Total (MSW)	239.5	21,905,653	17,584,059	11,423,177	29.4	46.3
C&D Landfill Units						
Area 1 (Vertical Expn.) (Active) (See Note 1)	16.2	572,734	479,645	289,285	2.0	2.4
Area 2 - Cell 1	11.3	451,611	389,897	233,938	5.5	6.4
Area 2 - Cell 2	4.5	462,658	387,062	232,237	4.4	5.4
Total (C&D)	32.0	1,487,003	1,256,604	755,460	11.9	14.2

Notes:
1. Life Expectancy as of March 21, 2005.

G.N. Richardson & Associates
Engineering and Geological Services
14 N. Boylan Avenue Tel: 919-828-0577
Raleigh, NC 27603 Fax: 919-828-3899

SHEET: 3 / 19
JOB #: JOHNSTON-22
DATE: 10/6/05
BY: PKS
CHKD BY:

Johnston County Landfill - MSW Phase 4A (Cells 1&2)
Volume Study: Life Expectancy Calculations

Waste & Periodic Cover Parameters:

Waste Density (pcy) =	1,200	(From Filling Rate and Density Calcs.)
Waste Density (tcy) =	0.60	
Percentage of Periodic Cover =	15	

Volume Calculations:

Volume From AutoCAD (cy) = 573,921

Gross Volume (Top of Protective Cover to Top of Intermediate Cover):

Adjustment For Other Layers:

Area of Waste Footprint (Ac.) = 22.0

0 feet	Compacted Soil Liner =	0 cy
0 feet	LCS/Protective Cover =	0 cy
	Sum =	0 cy

Gross Volume (cy) = 573,921

Net (Waste) Volume:

Adjustment For Other Layers:

Area of Final Cover (Ac.) = 0

2 feet	Vegetative Soil Layer =	0 cy
	Sum =	0 cy

Volume of Periodic Cover (cy) = 86,088

Net (Waste) Volume (cy) = 487,833

Net (Waste) Volume (tons) = 292,700

Life:

County Only: 87,001 (=.8 x 2005) + 112,169 (2006) + $\frac{93,530}{115,648}$ (2007)
Start = 2005.2 ⇒ 2007.8 (= 2.6 YRS)

+500 TPD: 87,001 (=.8 x 2005) + $\frac{205,699}{268,168}$ (2006)
Start = 2005.2 ⇒ 2006.8 (= 1.6 YRS)

G.N. Richardson & Associates
Engineering and Geological Services
14 N. Boylan Avenue Tel: 919-828-0577
Raleigh, NC 27603 Fax: 919-828-3899

SHEET: 4/19
JOB #: JOHNSTON-22
DATE: 10/6/05
BY: PKS
CHKD BY:

Johnston County Landfill - MSW Phase 4A (Cell 3)
Volume Study: Life Expectancy Calculations

Waste & Periodic Cover Parameters:

Waste Density (pcy) =	1,400	(From Filling Rate and Density Calcs.)
Waste Density (tcy) =	0.70	
Percentage of Periodic Cover =	15	

Volume Calculations:

Volume From AutoCAD (cy) = 1,450,559

Gross Volume (Top of Protective Cover to Top of Final Cover):

Adjustment For Other Layers:

Area of Waste Footprint (Ac.) = 7.4

0 feet	Compacted Soil Liner =	0 cy
2 feet	LCS/Protective Cover =	23,877 cy
	Sum =	23,877 cy

Gross Volume (cy) = 1,426,682

Net (Waste) Volume:

Adjustment For Other Layers:

Area of Final Cover (Ac.) = 29.4 (Cells 1-3)

2 feet	Vegetative Soil Layer =	94,864 cy
	Sum =	94,864 cy

Volume of Periodic Cover (cy) = 214,002

Net (Waste) Volume (cy) = 1,117,815

Net (Waste) Volume (tons) = 782,471

Life:

County Only:
Start = 2007.8

$22,118 \ldots (2007) + 630,901\ (2008-2012) + \frac{129,452}{136,440}\ (2013)$

$\Rightarrow 2013.9\ (= 6.1\ \text{YRS.})$

+500 TPD:
Start = 2006.8

$62,469\ (2006) + 546,830\ (2007-2008) + \frac{173,172}{278,782}\ (2009)$

$\Rightarrow 2009.6\ (2.8\ \text{YRS.})$

G.N. Richardson & Associates
Engineering and Geological Services
14 N. Boylan Avenue Tel: 919-828-0577
Raleigh, NC 27603 Fax: 919-828-3899

SHEET: 5/19
JOB #: JOHNSTON-22
DATE: 10/6/05
BY: PKS
CHKD BY:

Johnston County Landfill - MSW Phase 6
Volume Study: Life Expectancy Calculations

Waste & Periodic Cover Parameters:

Waste Density (pcy) =	1,200	(From Filling Rate and Density Calcs.)
Waste Density (tcy) =	0.60	
Percentage of Periodic Cover =	15	

Volume Calculations:

Volume From AutoCAD (cy) = 1,521,161

Gross Volume (Top of Protective Cover to Top of Final Cover):

Adjustment For Other Layers:

	Area of Waste Footprint (Ac.) =	21.1
1.5 feet	Compacted Soil Liner =	51,062 cy
2 feet	LCS/Protective Cover =	68,083 cy
	Sum =	119,145 cy
	Gross Volume (cy) =	1,402,016

Net (Waste) Volume:

Adjustment For Other Layers:

	Area of Final Cover (Ac.) =	8.8
2 feet	Vegetative Soil Layer =	28,395 cy
	Sum =	28,395 cy
	Volume of Periodic Cover (cy) =	210,302
	Net (Waste) Volume (cy) =	1,163,319
	Net (Waste) Volume (tons) =	697,992

Life:

County Only:
start = 2013.9

$6,988\ (2013) + 582,115\ (2014-2017) + \frac{108,889}{155,050}\ (2018)$

$\Rightarrow 2018.7\ (4.8\ \text{YRS.})$

+500 TPD:
start = 2009.6

$105,610\ (2009) + 567,951\ (2010-2011) + \frac{24,431}{288,986}\ (2012)$

$\Rightarrow 2012.1\ (2.5\ \text{YRS.})$

G.N. Richardson & Associates
Engineering and Geological Services
14 N. Boylan Avenue Tel: 919-828-0577
Raleigh, NC 27603 Fax: 919-828-3899

SHEET: 6 of 9
JOB #: JOHNSTON-22
DATE: 10/6/05
BY: PKS
CHKD BY:

Johnston County Landfill - MSW Phase 7
Volume Study: Life Expectancy Calculations

Waste & Periodic Cover Parameters:

Waste Density (pcy) =	1,200	(From Filling Rate and Density Calcs.)
Waste Density (tcy) =	0.60	
Percentage of Periodic Cover =	15	

Volume Calculations:

Volume From AutoCAD (cy) = 1,870,795

Gross Volume (Top of Protective Cover to Top of Final Cover):

Adjustment For Other Layers:

	Area of Waste Footprint (Ac.) =	19.8
1.5 feet	Compacted Soil Liner =	47,916 cy
2 feet	LCS/Protective Cover =	63,888 cy
	Sum =	111,804 cy
	Gross Volume (cy) =	1,758,991

Net (Waste) Volume:

Adjustment For Other Layers:

	Area of Final Cover (Ac.) =	12.0
2 feet	Vegetative Soil Layer =	38,720 cy
	Sum =	38,720 cy
	Volume of Periodic Cover (cy) =	263,849
	Net (Waste) Volume (cy) =	1,456,422
	Net (Waste) Volume (tons) =	873,853

Life:

County Only:
Start = 2018.7

$46{,}161\ (2018) + 659{,}313\ (2019-2022) + \frac{168{,}379}{174{,}158}\ (2023)$

$\Rightarrow$ 2024.0 (5.3 YRS.)

+500 TPD:
Start = 2012.1

$264{,}555\ (2012) + 588{,}448\ (2013-2014) + \frac{20{,}850}{299{,}650}\ (2015)$

$\Rightarrow$ 2015.1 (3.0 YRS.)

G.N. Richardson & Associates
Engineering and Geological Services
14 N. Boylan Avenue Tel: 919-828-0577
Raleigh, NC 27603 Fax: 919-828-3899

SHEET: 7 / 19
JOB #: JOHNSTON-22
DATE: 10/6/05
BY: PKS
CHKD BY:

Johnston County Landfill - MSW Phase 8
Volume Study: Life Expectancy Calculations

Waste & Periodic Cover Parameters:

Waste Density (pcy) =	1,200	(From Filling Rate and Density Calcs.)
Waste Density (tcy) =	0.60	
Percentage of Periodic Cover =	15	

Volume Calculations:

Volume From AutoCAD (cy) = 1,987,163

Gross Volume (Top of Protective Cover to Top of Final Cover):

Adjustment For Other Layers:

Area of Waste Footprint (Ac.) = 25.2

1.5 feet	Compacted Soil Liner =	60,984 cy
2 feet	LCS/Protective Cover =	81,312 cy
	Sum =	142,296 cy
	Gross Volume (cy) =	1,844,867

Net (Waste) Volume:

Adjustment For Other Layers:

Area of Final Cover (Ac.) = 26.6

2 feet	Vegetative Soil Layer =	85,829 cy
	Sum =	85,829 cy
	Volume of Periodic Cover (cy) =	276,730
	Net (Waste) Volume (cy) =	1,482,308
	Net (Waste) Volume (tons) =	889,385

Life:

County Only
start = 2024.0

$$\frac{5,774}{} (2023) + 736,184 \ (2024-2027) + \frac{147,422}{194,291} (2028)$$

$\Rightarrow$ 2028.8 (4.8 YRS.)

+500 TPD
Start = 2015.1

$$278,800 (2015) + 610,457 \ (2016-2017) + \frac{128}{311,050} (2018)$$

$\Rightarrow$ 2018.0 (2.9 YRS.)

G.N. Richardson & Associates
Engineering and Geological Services
14 N. Boylan Avenue Tel: 919-828-0577
Raleigh, NC 27603 Fax: 919-828-3899

SHEET: 8/19
JOB #: JOHNSTON-22
DATE: 10/6/05
BY: PKS
CHKD BY:

Johnston County Landfill - MSW Phase 9
Volume Study: Life Expectancy Calculations

Waste & Periodic Cover Parameters:

Waste Density (pcy) =	1,400	(From Filling Rate and Density Calcs.)
Waste Density (tcy) =	0.70	
Percentage of Periodic Cover =	15	

Volume Calculations:

Volume From AutoCAD (cy) = 6,811,964

Gross Volume (Top of Protective Cover to Top of Final Cover):

Adjustment For Other Layers:

	Area of Waste Footprint (Ac.) =	22.5
1.5 feet	Compacted Soil Liner =	54,450 cy
2 feet	LCS/Protective Cover =	72,600 cy
	Sum =	127,050 cy
	Gross Volume (cy) =	6,684,914

Net (Waste) Volume:

Adjustment For Other Layers:

	Area of Final Cover (Ac.) =	25.7
2 feet	Vegetative Soil Layer =	82,925 cy
	Sum =	82,925 cy
	Volume of Periodic Cover (cy) =	1,002,737
	Net (Waste) Volume (cy) =	5,599,252
	Net (Waste) Volume (tons) =	3,919,476

Life:

County Only:
start = 2028.8

$46{,}869\,(2028) + 3{,}869{,}717\,(2029\text{-}2045) + \frac{2810}{263{,}497}\,(2046)$

$\Rightarrow$ 2046.0 (17.2 YRS.)

+500TPD:
start = 2018.0

$310{,}922\,(2018) + 3{,}323{,}947\,(2019\text{-}2028) + \frac{284{,}607}{354{,}629}\,(2029)$

$\Rightarrow$ 2029.8 (11.8 YRS.)

G.N. Richardson & Associates
Engineering and Geological Services
14 N. Boylan Avenue Tel: 919-828-0577
Raleigh, NC 27603 Fax: 919-828-3899

SHEET: 9/19
JOB #: JOHNSTON-22
DATE: 10/6/05
BY: PKS
CHKD BY:

Johnston County Landfill - MSW Phase 10
Volume Study: Life Expectancy Calculations

Waste & Periodic Cover Parameters:

Waste Density (pcy) =	1,400	(From Filling Rate and Density Calcs.)
Waste Density (tcy) =	0.70	
Percentage of Periodic Cover =	15	

Volume Calculations:

Volume From AutoCAD (cy) = 3,174,785

Gross Volume (Top of Protective Cover to Top of Final Cover):

Adjustment For Other Layers:

	Area of Waste Footprint (Ac.) =	17.5
1.5 feet	Compacted Soil Liner =	42,350 cy
2 feet	LCS/Protective Cover =	56,467 cy
	Sum =	98,817 cy
	Gross Volume (cy) =	3,075,968

Net (Waste) Volume:

Adjustment For Other Layers:

	Area of Final Cover (Ac.) =	33.0
2 feet	Vegetative Soil Layer =	106,480 cy
	Sum =	106,480 cy
	Volume of Periodic Cover (cy) =	461,395
	Net (Waste) Volume (cy) =	2,508,093
	Net (Waste) Volume (tons) =	1,755,665

Life:

County Only:
Start = 2046.0

$260{,}687\ (2046) + 1{,}362{,}401\ (2047-2050) + \frac{132{,}577}{286{,}335}\ (2051)$

$\Rightarrow 2051.5$ (5.5 YRS.)

+500 TPD:
Start = 2029.8

$70{,}022\ (2029) + 1{,}452{,}376\ (2030-2033) + \frac{233{,}267}{371{,}845}\ (2034)$

$\Rightarrow 2034.6$ (4.8 YRS.)

G.N. Richardson & Associates
Engineering and Geological Services
14 N. Boylan Avenue Tel: 919-828-0577
Raleigh, NC 27603 Fax: 919-828-3899

SHEET: 10/19
JOB #: JOHNSTON-22
DATE: 10/6/05
BY: PKS
CHKD BY:

Johnston County Landfill - C&D Area 1
Volume Study: Life Expectancy Calculations

Waste & Periodic Cover Parameters:

Waste Density (pcy) =	1,200	(From Filling Rate and Density Calcs.)
Waste Density (tcy) =	0.60	
Percentage of Periodic Cover =	10	

Volume Calculations:

Volume From AutoCAD (cy) = 180,753 (AutoCAD - 2005 Volume Study)

Gross Volume (Top of Protective Cover to Top of Final Cover):

Adjustment For Other Layers:

Area of Waste Footprint (Ac.) = 16.2

0 feet	Compacted Soil Liner =	0 cy
0 feet	LCS/Protective Cover =	0 cy
	Sum =	0 cy

Gross Volume (cy) = 180,753

Net (Waste) Volume:

Adjustment For Other Layers:

Area of Final Cover (Ac.) = 11.1

2 feet	Vegetative Soil Layer =	35,816 cy
	Sum =	35,816 cy

Volume of Periodic Cover (cy) = 18,075

Net (Waste) Volume (cy) = 126,862

Net (Waste) Volume (tons) = 76,117

Life:
Start = 2005.2

AVG: $24,986\ (=.8\times 2005) + 32,215\ (2006) + \frac{18916}{33,214}\ (2007)$
$\Rightarrow 2007.6\ (2.4\ \text{YRS.})$

+20%: $29,983\ (=.8\times 2005) + 38,658\ (2006) + \frac{7476}{39,856}\ (2007)$
$\Rightarrow 2007.2\ (2.04\ \text{RS.})$

G.N. Richardson & Associates
Engineering and Geological Services
14 N. Boylan Avenue Tel: 919-828-0577
Raleigh, NC 27603 Fax: 919-828-3899

SHEET: 11 / 19
JOB #: JOHNSTON-22
DATE: 5/18/06
BY: PKS
CHKD BY:

Johnston County Landfill
Capacity Evaluation - C&D Area 2 (Cell 1)

Waste & Periodic Cover Parameters:

Waste Density (pcy) =	1,200	(From Filling Rate and Density Calcs.)
Waste Density (tcy) =	0.60	
Percentage of Periodic Cover =	10	

Volume Calculations:

Volume From AutoCAD (cy) = 451,611 (Pro. Cover to Top of Cell 1 Grades) **(= Gross Capac.)**

Net (Waste) Capacity:

Adjustment For Other Layers:

	Area of Final Cover (Ac.) =	5.7
2 feet	Vegetative Soil Layer =	(18,392) cy
	Sum =	(18,392) cy
	Volume of Waste and Periodic Cover (cy) =	433,219
	Volume of Periodic Cover (cy) =	(43,322)
	Net (Waste) Capacity (cy) =	389,897
	Net (Waste) Capacity (tons) =	233,938

Life Expectancy Calculations:

Average:

Start Time	End Time	Tons Disposed	Total Tons	Remainder	
2007.6	2013	195,491	195,491	38,447	
2013	2013.98	38,447	233,938	0	See Waste Generation Analysis

Landfill Life Expectancy (years) = 6.4

+20 Percent:

Start Time	End Time	Tons Disposed	Total Tons	Remainder	
2007.2	2012	203,979	203,979	29,959	
2012	2012.65	29,959	233,938	0	See Waste Generation Analysis

Landfill Life Expectancy (years) = 5.5

G.N. Richardson & Associates
Engineering and Geological Services
14 N. Boylan Avenue Tel: 919-828-0577
Raleigh, NC 27603 Fax: 919-828-3899

SHEET: 12A
JOB #: JOHNSTON-22
DATE: 5/18/06
BY: PKS
CHKD BY:

Johnston County Landfill
Capacity Evaluation - C&D Area 2 (Cell 2)

Waste & Periodic Cover Parameters:

Waste Density (pcy) =	1,200	(From Filling Rate and Density Calcs.)
Waste Density (tcy) =	0.60	
Percentage of Periodic Cover =	10	

Volume Calculations:

Volume From AutoCAD (cy) = 462,658 (Pro. Cover to Top of Cell 1 Grades) **(= Gross Capac.)**

Net (Waste) Capacity:

Adjustment For Other Layers:

	Area of Final Cover (Ac.) =	10.1
2 feet	Vegetative Soil Layer =	(32,589) cy
	Sum =	(32,589) cy
	Volume of Waste and Periodic Cover (cy) =	430,069
	Volume of Periodic Cover (cy) =	(43,007)
	Net (Waste) Capacity (cy) =	387,062
	Net (Waste) Capacity (tons) =	232,237

Life Expectancy Calculations:

Average:

Start Time	End Time	Tons Disposed	Total Tons	Remainder	
2013.98	2014	738	738	231,499	
2014	2019	212,450	213,188	19,049	See Waste Generation Analysis
2019	2019.42	19,049	232,237	0	

Landfill Life Expectancy (years) = 5.4

+20 Percent:

Start Time	End Time	Tons Disposed	Total Tons	Remainder	
2012.65	2013	15,873	15,873	216,364	
2013	2017	211,428	227,301	4,936	See Waste Generation Analysis
2017	2017.1	4,936	232,237	0	

Landfill Life Expectancy (years) = 4.4

G.N. Richardson & Associates
Engineering and Geological Services
14 N. Boylan Avenue
Raleigh, NC 27603
Tel: 919-828-0577
Fax: 919-828-3899

SHEET: 13, 14
JOB #: JOHNSTON-22
DATE: 10/6/05
BY: PKS
CHKD BY:

Johnston County Landfill
Waste Generaton Analysis - MSW (County-Only)

Per-Capita Disposal Rate (tons/person/yr.) = 0.74503 (Based on FY 2004-05 Data)
Estimated Monthly Tonnage Variance (%) = 20 (Estimated by County)

Year	Population (See Note 1)	% Increase From Previous	Projected County Tonnage	Projected Out of County Tonnage	Projected Avg. Monthly Tonnage	Projected Monthly Variance (Min.)	Projected Monthly Variance (Max.)
2005	145,968	-----	108,751	0	9,063	7,250	10,875
2006	150,557	3.14	112,169	0	9,347	7,478	11,217
2007	155,226	3.10	115,648	0	9,637	7,710	11,565
2008	159,970	3.06	119,182	0	9,932	7,945	11,918
2009	164,801	3.02	122,782	0	10,232	8,185	12,278
2010	169,566	2.89	126,332	0	10,528	8,422	12,633
2011	173,978	2.60	129,619	0	10,802	8,641	12,962
2012	178,498	2.60	132,986	0	11,082	8,866	13,299
2013	183,133	2.60	136,440	0	11,370	9,096	13,644
2014	187,923	2.62	140,008	0	11,667	9,334	14,001
2015	192,811	2.60	143,650	0	11,971	9,577	14,365
2016	197,748	2.56	147,328	0	12,277	9,822	14,733
2017	202,850	2.58	151,129	0	12,594	10,075	15,113
2018	208,113	2.59	155,050	0	12,921	10,337	15,505
2019	213,560	2.62	159,109	0	13,259	10,607	15,911
2020	218,946	2.52	163,121	0	13,593	10,875	16,312
2021	223,754	2.20	166,703	0	13,892	11,114	16,670
2022	228,689	2.21	170,380	0	14,198	11,359	17,038
2023	233,760	2.22	174,158	0	14,513	11,611	17,416
2024	239,003	2.24	178,064	0	14,839	11,871	17,806
2025	244,330	2.23	182,033	0	15,169	12,136	18,203
2026	249,653	2.18	185,999	0	15,500	12,400	18,600
2027	255,141	2.20	190,088	0	15,841	12,673	19,009
2028	260,783	2.21	194,291	0	16,191	12,953	19,429
2029	266,606	2.23	198,629	0	16,552	13,242	19,863
2030	271,075	1.68	201,959	0	16,830	13,464	20,196
2031	275,619	1.68	205,344	0	17,112	13,690	20,534
2032	280,239	1.68	208,786	0	17,399	13,919	20,879
2033	284,937	1.68	212,286	0	17,691	14,152	21,229
2034	289,713	1.68	215,845	0	17,987	14,390	21,584
2035	294,569	1.68	219,463	0	18,289	14,631	21,946
2036	299,507	1.68	223,142	0	18,595	14,876	22,314
2037	304,527	1.68	226,882	0	18,907	15,125	22,688
2038	309,632	1.68	230,685	0	19,224	15,379	23,069
2039	314,822	1.68	234,552	0	19,546	15,637	23,455
2040	320,099	1.68	238,484	0	19,874	15,899	23,848
2041	325,465	1.68	242,481	0	20,207	16,165	24,248
2042	330,921	1.68	246,546	0	20,545	16,436	24,655
2043	336,468	1.68	250,679	0	20,890	16,712	25,068
2044	342,108	1.68	254,881	0	21,240	16,992	25,488
2045	347,843	1.68	259,153	0	21,596	17,277	25,915
2046	353,673	1.68	263,497	0	21,958	17,566	26,350
2047	359,602	1.68	267,914	0	22,326	17,861	26,791
2048	365,630	1.68	272,405	0	22,700	18,160	27,241
2049	371,758	1.68	276,971	0	23,081	18,465	27,697
2050	377,990	1.68	281,614	0	23,468	18,774	28,161
2051	384,326	1.68	286,335	0	23,861	19,089	28,633
2052	390,768	1.68	291,134	0	24,261	19,409	29,113
2053	397,319	1.68	296,014	0	24,668	19,734	29,601
2054	403,979	1.68	300,976	0	25,081	20,065	30,098
2055	410,751	1.68	306,021	0	25,502	20,401	30,602

Notes:
1. Population figures and increases from 2005 to 2030 are from the NC Demographics Unit. Figures after 2030 are based on an assumed constant percentage increase from 2030 onward.

G.N. Richardson & Associates
Engineering and Geological Services
14 N. Boylan Avenue Tel: 919-828-0577
Raleigh, NC 27603 Fax: 919-828-3899

SHEET: 14/19
JOB #: JOHNSTON-22
DATE: 10/6/05
BY: PKS
CHKD BY:

Johnston County Landfill
Waste Generaton Analysis - MSW (+500 TPD Out of County)

Per-Capita Disposal Rate (tons/person/yr.) = 0.74503 (Based on FY 2004-05 Data)
Estimated Monthly Tonnage Variance (%) = 20 (Estimated by County)

Year	Population (See Note 1)	% Increase From Previous	Projected County Tonnage	Projected Out of County Tonnage	Projected Total Tonnage	Projected Avg. Monthly Tonnage	Projected Monthly Variance (Min.)	Projected Monthly Variance (Max.)
2005	145,968	-----	108,751	0	108,751	9,063	7,250	10,875
2006	150,557	3.14	112,169	156,000	268,169	22,347	17,878	26,817
2007	155,226	3.10	115,648	156,000	271,648	22,637	18,110	27,165
2008	159,970	3.06	119,182	156,000	275,182	22,932	18,345	27,518
2009	164,801	3.02	122,782	156,000	278,782	23,232	18,585	27,878
2010	169,566	2.89	126,332	156,000	282,332	23,528	18,822	28,233
2011	173,978	2.60	129,619	156,000	285,619	23,802	19,041	28,562
2012	178,498	2.60	132,986	156,000	288,986	24,082	19,266	28,899
2013	183,133	2.60	136,440	156,000	292,440	24,370	19,496	29,244
2014	187,923	2.62	140,008	156,000	296,008	24,667	19,734	29,601
2015	192,811	2.60	143,650	156,000	299,650	24,971	19,977	29,965
2016	197,748	2.56	147,328	156,000	303,328	25,277	20,222	30,333
2017	202,850	2.58	151,129	156,000	307,129	25,594	20,475	30,713
2018	208,113	2.59	155,050	156,000	311,050	25,921	20,737	31,105
2019	213,560	2.62	159,109	156,000	315,109	26,259	21,007	31,511
2020	218,946	2.52	163,121	156,000	319,121	26,593	21,275	31,912
2021	223,754	2.20	166,703	156,000	322,703	26,892	21,514	32,270
2022	228,689	2.21	170,380	156,000	326,380	27,198	21,759	32,638
2023	233,760	2.22	174,158	156,000	330,158	27,513	22,011	33,016
2024	239,003	2.24	178,064	156,000	334,064	27,839	22,271	33,406
2025	244,330	2.23	182,033	156,000	338,033	28,169	22,536	33,803
2026	249,653	2.18	185,999	156,000	341,999	28,500	22,800	34,200
2027	255,141	2.20	190,088	156,000	346,088	28,841	23,073	34,609
2028	260,783	2.21	194,291	156,000	350,291	29,191	23,353	35,029
2029	266,606	2.23	198,629	156,000	354,629	29,552	23,642	35,463
2030	271,075	1.68	201,959	156,000	357,959	29,830	23,864	35,796
2031	275,619	1.68	205,344	156,000	361,344	30,112	24,090	36,134
2032	280,239	1.68	208,786	156,000	364,786	30,399	24,319	36,479
2033	284,937	1.68	212,286	156,000	368,286	30,691	24,552	36,829
2034	289,713	1.68	215,845	156,000	371,845	30,987	24,790	37,184
2035	294,569	1.68	219,463	156,000	375,463	31,289	25,031	37,546
2036	299,507	1.68	223,142	156,000	379,142	31,595	25,276	37,914
2037	304,527	1.68	226,882	156,000	382,882	31,907	25,525	38,288
2038	309,632	1.68	230,685	156,000	386,685	32,224	25,779	38,669
2039	314,822	1.68	234,552	156,000	390,552	32,546	26,037	39,055
2040	320,099	1.68	238,484	156,000	394,484	32,874	26,299	39,448
2041	325,465	1.68	242,481	156,000	398,481	33,207	26,565	39,848
2042	330,921	1.68	246,546	156,000	402,546	33,545	26,836	40,255
2043	336,468	1.68	250,679	156,000	406,679	33,890	27,112	40,668
2044	342,108	1.68	254,881	156,000	410,881	34,240	27,392	41,088
2045	347,843	1.68	259,153	156,000	415,153	34,596	27,677	41,515
2046	353,673	1.68	263,497	156,000	419,497	34,958	27,966	41,950
2047	359,602	1.68	267,914	156,000	423,914	35,326	28,261	42,391
2048	365,630	1.68	272,405	156,000	428,405	35,700	28,560	42,841
2049	371,758	1.68	276,971	156,000	432,971	36,081	28,865	43,297
2050	377,990	1.68	281,614	156,000	437,614	36,468	29,174	43,761

Notes:
1. Population figures and increases from 2005 to 2030 are from the NC Demographics Unit. Figures after 2030 are based on an assumed constant percentage increase from 2030 onward.

G.N. Richardson & Associates
Engineering and Geological Services
14 N. Boylan Avenue
Raleigh, NC 27603
Tel: 919-828-0577
Fax: 919-828-3899

SHEET: 15.19
JOB #: JOHNSTON-22
DATE: 10/6/05
BY: PKS
CHKD BY:

Johnston County Landfill
Waste Generaton Analysis - C&D

Per-Capita Disposal Rate (tons/person/yr.) = 0.21397 (Based on FY 2004-05 Data)
Estimated Monthly Tonnage Variance (%) = 20 (Estimated by County)

Year	Population (See Note 1)	% Increase From Previous	Projected County Tonnage	Projected County Tonnage (+20%)	Projected Avg. Monthly Tonnage	Projected Monthly Variance (Min.)	Projected Monthly Variance (Max.)
2005	145,968	-----	31,233	37,479	2,603	2,082	3,123
2006	150,557	3.14	32,215	38,658	2,685	2,148	3,221
2007	155,226	3.10	33,214	39,856	2,768	2,214	3,321
2008	159,970	3.06	34,229	41,075	2,852	2,282	3,423
2009	164,801	3.02	35,262	42,315	2,939	2,351	3,526
2010	169,566	2.89	36,282	43,538	3,024	2,419	3,628
2011	173,978	2.60	37,226	44,671	3,102	2,482	3,723
2012	178,498	2.60	38,193	45,832	3,183	2,546	3,819
2013	183,133	2.60	39,185	47,022	3,265	2,612	3,918
2014	187,923	2.62	40,210	48,252	3,351	2,681	4,021
2015	192,811	2.60	41,256	49,507	3,438	2,750	4,126
2016	197,748	2.56	42,312	50,775	3,526	2,821	4,231
2017	202,850	2.58	43,404	52,085	3,617	2,894	4,340
2018	208,113	2.59	44,530	53,436	3,711	2,969	4,453
2019	213,560	2.62	45,695	54,835	3,808	3,046	4,570
2020	218,946	2.52	46,848	56,217	3,904	3,123	4,685
2021	223,754	2.20	47,877	57,452	3,990	3,192	4,788
2022	228,689	2.21	48,933	58,719	4,078	3,262	4,893
2023	233,760	2.22	50,018	60,021	4,168	3,335	5,002
2024	239,003	2.24	51,139	61,367	4,262	3,409	5,114
2025	244,330	2.23	52,279	62,735	4,357	3,485	5,228
2026	249,653	2.18	53,418	64,102	4,452	3,561	5,342
2027	255,141	2.20	54,593	65,511	4,549	3,640	5,459
2028	260,783	2.21	55,800	66,960	4,650	3,720	5,580
2029	266,606	2.23	57,046	68,455	4,754	3,803	5,705
2030	271,075	1.68	58,002	69,602	4,833	3,867	5,800
2031	275,619	1.68	58,974	70,769	4,915	3,932	5,897
2032	280,239	1.68	59,963	71,955	4,997	3,998	5,996
2033	284,937	1.68	60,968	73,161	5,081	4,065	6,097
2034	289,713	1.68	61,990	74,388	5,166	4,133	6,199
2035	294,569	1.68	63,029	75,635	5,252	4,202	6,303

Notes:
1. Population figures and increases from 2005 to 2030 are from the NC Demographics Unit. Figures after 2030 are based on an assumed constant percentage increase from 2030 onward.

16/A

volume report 100505.txt

Site Volume Table: Unadjusted

Cut yards	Fill yards	Net yards	Method

Site: PHASE 4A

Cut/Fill

Stratum: paste topo msw to ph4a cell3 sgrd topo-msw-052104-cd-paste phase4a-cell3-sgrd

362	3,275	2,913	(F) Composite

Stratum: topo 0605 to ph4a cell 1-2 icvr topo-060205 ph4a-cell1-2-icvr

4,729	573,921	569,192	(F) Composite

Perimeter Ignore

Reminder cells 1&2

Stratum: paste topo 0605 to ph4a fcvr topo-060205-ph4a-cell1-2-icvr-paste-3 phase4a-fcvr

141	1,450,700	1,450,559	(F) Composite

PH4A-Cell3

17/19

volume report 092905.txt

Site Volume Table: Unadjusted

Cut yards	Fill yards	Net yards	Method

Site: SITE2

PH6 Stratum: sgrd-cell-6-10 to fcvr-cell-6 sgrd-cell6-10 fcvr-cell6

491	1,521,652	1,521,161	(F) Composite

~~Stratum: sgrd-cell 6-10 to fcvr-cell 7 sgrd-cell6-10 fcvr-cell7~~

~~1,037~~	~~3392987~~ cell5647	3,391,950	(F) Composite

PH8 Stratum: paste-sgrd-ph7-to-fcvr-6-8 paste-sgrd-cell6-10-to-fcvr-7 fcvr-cell6-8

100	1,987,263	1,987,163	(F) Composite

Stratum: paste-sgrd-fcvr-ph6 to fcvr-cell7 paste-sgrd-cell6-10-to-fcvr-6 fcvr-cell7

PH.7

547	1,871,341	1,870,795	(F) Composite

Stratum: topo 032105 to sgrd cell 6 topo-032105 sgrd-cell-6

279,493	55,613	223,879	(C) Composite

Stratum: topo 032105 to sgrd cell 7 topo-032105 sgrd-cell7

222,037	85,202	136,834	(C) Composite

Stratum: topo 032105 to sgrd cell 8 topo-032105 sgrd-cell8

242,630	105,976	136,654	(C) Composite

Stratum: topo 032105 to sgrd cell 9 topo-032105 sgrd-cell9

68,999	178,758	109,759	(F) Composite

Stratum: topo 032105 to sgrd cell 10 topo-032105 sgrd-cell10

151,736	21,326	130,410	(C) Composite

18/19

```
Project: land projects                                Fri September 09 16:53:05 2005
                    Site Volume Table: Unadjusted
                 Cut                Fill                Net
                yards             yards             yards      Method
=========================================================================

Site: CELL 6-10

  Stratum: cell 6-10 fcvr airspace  sgrd-cell6-10  fcvr-cell6-10
                      30          15,374,052          15,374,022 (F) Composite

  Stratum: cell 6-10 sgrd cut-fill  topo-032105  sgrd-cell6-10
                 962,425             431,448             530,977 (C) Composite


  Stratum: cell 6-8 fcvr airspace  sgrd-cell6-10  fcvr-cell6-8
                       1           5,386,536           5,386,535 (F) Composite

  Stratum: cell 9 fcvr airspace  sgrd-cell6-10-fcvr8-paste  fcvr-cell9
                      82           6,812,047           6,811,964 (F) Composite

  Stratum: cell 10 fcvr airspace  sgrd-cell6-10-fcvr9-paste  fcvr-cell10
                       0           3,174,786           3,174,785 (F) Composite
```

Index	Surface Pair		Volume			
	Base Surface	Comparison Surface	Cut	Fill	Net	Net Graph
1	TOPO-060205	SGRD	44610.31 Cu. Yd.	77951.65 Cu. Yd.	33341.34 Cu. Yd. <Fill>	
2	PCVR	FCVR CELL 1	302.14 Cu. Yd.	451912.78 Cu. Yd.	451610.63 Cu. Yd. <F...	
3	PCVR CELL 1 PASTE	FCVR	67.90 Cu. Yd.	462726.08 Cu. Yd.	462658.18 Cu. Yd. <F...	

Cell 2

$\Sigma = 914,269$

CED-Area 2

19/19

PROJECT Johnston County C&D Landfill - Area 2

JOB NO. JOHNSTON-22

DATE 7/14/05

SUBJECT Earthwork Quantities

COMPUTED BY PKS

CHECKED BY

Objective To determine the required volumes of soil and aggregate required for the construction and operation of the landfill.

Analysis The volumes of each material will be calculated by taking design thicknesses and/or cross sections and multiplying by design areas and/or lengths. Areas and lengths are determined using AutoCAD, a planimeter, and/or direct measurement.

EARTHWORK.WPD

G.N. RICHARDSON & ASSOCIATES
Engineering and Geological Services
14 N. Boylan Avenue, Raleigh, NC 27603
Telephone: (919) 828-0577

G.N. Richardson & Associates
Engineering and Geological Services
14 N. Boylan Avenue Tel: 919-828-0577
Raleigh, NC 27603 Fax: 919-828-3899

SHEET:	2 / 14
JOB #:	JOHNSTON-22
DATE:	10/6/05
BY:	PKS
CHKD BY:	

Johnston County Landfill - MSW Phase 4A - Cells 1&2
Earthwork Quantities

Daily and Intermediate Cover Volume:

Volume of Periodic Cover (cy) = 86,088 **(From Life Expectancy Calcs.)**

G.N. Richardson & Associates
Engineering and Geological Services
14 N. Boylan Avenue Tel: 919-828-0577
Raleigh, NC 27603 Fax: 919-828-3899

SHEET:	3 / 14
JOB #:	JOHNSTON-22
DATE:	10/6/05
BY:	PKS
CHKD BY:	

Johnston County Landfill - MSW Phase 4A - Cell 3
Earthwork Quantities

Subgrade Cut and Fill Volumes:

Volume of Cut (cy) =	362	**(From AutoCAD - See Attached)**
Volume of Fill (cy) =	3,275	**(From AutoCAD - See Attached)**

LCS/Protective Cover Volume:

Area of LCS/Pro. Cover (Ac.) =	7.4
Thickness of LCS/Pro. Cover (ft) =	2.0
Volume of LCS/Pro. Cover (cy) =	23,877

Daily and Intermediate Cover Volume:

Volume of Periodic Cover (cy) =	214,002	**(From Life Expectancy Calcs.)**

Vegetative Soil Layer (VSL) Volume:

Area of VSL (Ac.) =	29.4	**(From AutoCAD) (Cells 1-3)**
Thickness of VSL (ft) =	2.0	
Volume of VSL (cy) =	94,864	

G.N. Richardson & Associates
Engineering and Geological Services
14 N. Boylan Avenue Tel: 919-828-0577
Raleigh, NC 27603 Fax: 919-828-3899

SHEET:	4 / 14
JOB #:	JOHNSTON-22
DATE:	10/6/05
BY:	PKS
CHKD BY:	

Johnston County Landfill - MSW Phase 5
Earthwork Quantities

Vegetative Soil Layer (VSL) Volume:

Area of VSL (Ac.) =	19.2	**(From AutoCAD) (Cells 1-3)**
Thickness of VSL (ft) =	2.0	
Volume of VSL (cy) =	61,952	

G.N. Richardson & Associates
Engineering and Geological Services
14 N. Boylan Avenue Tel: 919-828-0577
Raleigh, NC 27603 Fax: 919-828-3899

SHEET:	5 /14
JOB #:	JOHNSTON-22
DATE:	10/6/05
BY:	PKS
CHKD BY:	

Johnston County Landfill - MSW Phase 6
Earthwork Quantities

Subgrade Cut and Fill Volumes:

Volume of Cut (cy) =	279,493	**(From AutoCAD - See Attached)**
Volume of Fill (cy) =	55,613	**(From AutoCAD - See Attached)**

Compacted Soil Liner (CSL) Volume:

Area of CSL (Ac.) =	21.1	**(From AutoCAD)**
Thickness of CSL (ft) =	1.5	
Volume of CSL (cy) =	51,062	

LCS/Protective Cover Volume:

Area of LCS/Pro. Cover (Ac.) =	21.1
Thickness of LCS/Pro. Cover (ft) =	2.0
Volume of LCS/Pro. Cover (cy) =	68,083

Daily and Intermediate Cover Volume:

Volume of Periodic Cover (cy) =	210,302	**(From Life Expectancy Calcs.)**

Vegetative Soil Layer (VSL) Volume:

Area of VSL (Ac.) =	21.1	**(From AutoCAD)**
Thickness of VSL (ft) =	2.0	
Volume of VSL (cy) =	68,083	

G.N. Richardson & Associates
Engineering and Geological Services
14 N. Boylan Avenue Tel: 919-828-0577
Raleigh, NC 27603 Fax: 919-828-3899

SHEET:	6 / 14
JOB #:	JOHNSTON-22
DATE:	10/6/05
BY:	PKS
CHKD BY:	

Johnston County Landfill - MSW Phase 7
Earthwork Quantities

Subgrade Cut and Fill Volumes:

Volume of Cut (cy) =	222,037	**(From AutoCAD - See Attached)**
Volume of Fill (cy) =	85,202	**(From AutoCAD - See Attached)**

Compacted Soil Liner (CSL) Volume:

Area of CSL (Ac.) =	19.8	**(From AutoCAD)**
Thickness of CSL (ft) =	1.5	
Volume of CSL (cy) =	47,916	

LCS/Protective Cover Volume:

Area of LCS/Pro. Cover (Ac.) =	19.8
Thickness of LCS/Pro. Cover (ft) =	2.0
Volume of LCS/Pro. Cover (cy) =	63,888

Daily and Intermediate Cover Volume:

Volume of Periodic Cover (cy) =	263,849	**(From Life Expectancy Calcs.)**

Vegetative Soil Layer (VSL) Volume:

Area of VSL (Ac.) =	19.8	**(From AutoCAD)**
Thickness of VSL (ft) =	2.0	
Volume of VSL (cy) =	63,888	

G.N. Richardson & Associates
Engineering and Geological Services
14 N. Boylan Avenue Tel: 919-828-0577
Raleigh, NC 27603 Fax: 919-828-3899

SHEET: 7 / 14
JOB #: JOHNSTON-22
DATE: 10/6/05
BY: PKS
CHKD BY:

Johnston County Landfill - MSW Phase 8
Earthwork Quantities

Subgrade Cut and Fill Volumes:

Volume of Cut (cy) =	242,630	**(From AutoCAD - See Attached)**
Volume of Fill (cy) =	105,976	**(From AutoCAD - See Attached)**

Compacted Soil Liner (CSL) Volume:

Area of CSL (Ac.) =	25.2	**(From AutoCAD)**
Thickness of CSL (ft) =	1.5	
Volume of CSL (cy) =	60,984	

LCS/Protective Cover Volume:

Area of LCS/Pro. Cover (Ac.) =	25.2
Thickness of LCS/Pro. Cover (ft) =	2.0
Volume of LCS/Pro. Cover (cy) =	81,312

Daily and Intermediate Cover Volume:

Volume of Periodic Cover (cy) =	276,730	**(From Life Expectancy Calcs.)**

Vegetative Soil Layer (VSL) Volume:

Area of VSL (Ac.) =	25.2	**(From AutoCAD)**
Thickness of VSL (ft) =	2.0	
Volume of VSL (cy) =	81,312	

G.N. Richardson & Associates
Engineering and Geological Services
14 N. Boylan Avenue Tel: 919-828-0577
Raleigh, NC 27603 Fax: 919-828-3899

SHEET:	8 / 14
JOB #:	JOHNSTON-22
DATE:	10/6/05
BY:	PKS
CHKD BY:	

Johnston County Landfill - MSW Phase 9
Earthwork Quantities

Subgrade Cut and Fill Volumes:

Volume of Cut (cy) =	68,999	**(From AutoCAD - See Attached)**
Volume of Fill (cy) =	178,758	**(From AutoCAD - See Attached)**

Compacted Soil Liner (CSL) Volume:

Area of CSL (Ac.) =	22.5	**(From AutoCAD)**
Thickness of CSL (ft) =	1.5	
Volume of CSL (cy) =	54,450	

LCS/Protective Cover Volume:

Area of LCS/Pro. Cover (Ac.) =	22.5
Thickness of LCS/Pro. Cover (ft) =	2.0
Volume of LCS/Pro. Cover (cy) =	72,600

Daily and Intermediate Cover Volume:

Volume of Periodic Cover (cy) =	1,002,737	**(From Life Expectancy Calcs.)**

Vegetative Soil Layer (VSL) Volume:

Area of VSL (Ac.) =	22.5	**(From AutoCAD)**
Thickness of VSL (ft) =	2.0	
Volume of VSL (cy) =	72,600	

G.N. Richardson & Associates
Engineering and Geological Services
14 N. Boylan Avenue Tel: 919-828-0577
Raleigh, NC 27603 Fax: 919-828-3899

SHEET:	9 , 14
JOB #:	JOHNSTON-22
DATE:	10/6/05
BY:	PKS
CHKD BY:	

Johnston County Landfill - MSW Phase 10
Earthwork Quantities

Subgrade Cut and Fill Volumes:

Volume of Cut (cy) =	151,736	**(From AutoCAD - See Attached)**
Volume of Fill (cy) =	21,326	**(From AutoCAD - See Attached)**

Compacted Soil Liner (CSL) Volume:

Area of CSL (Ac.) =	17.5	**(From AutoCAD)**
Thickness of CSL (ft) =	1.5	
Volume of CSL (cy) =	42,350	

LCS/Protective Cover Volume:

Area of LCS/Pro. Cover (Ac.) =	17.5
Thickness of LCS/Pro. Cover (ft) =	2.0
Volume of LCS/Pro. Cover (cy) =	56,467

Daily and Intermediate Cover Volume:

Volume of Periodic Cover (cy) =	461,395	**(From Life Expectancy Calcs.)**

Vegetative Soil Layer (VSL) Volume:

Area of VSL (Ac.) =	17.5	**(From AutoCAD)**
Thickness of VSL (ft) =	2.0	
Volume of VSL (cy) =	56,467	

G.N. Richardson & Associates
Engineering and Geological Services
14 N. Boylan Avenue Tel: 919-828-0577
Raleigh, NC 27603 Fax: 919-828-3899

SHEET: 10, 14
JOB #: JOHNSTON-22
DATE: 10/6/05
BY: PKS
CHKD BY:

Johnston County Landfill - C&D Area 1
Earthwork Quantities

Daily and Intermediate Cover Volume:

Volume of Periodic Cover (cy) = 18,075 **(From Life Expectancy Calcs.)**

Vegetative Soil Layer (VSL) Volume:

Area of VSL (Ac.) = 11.1 **(From ACAD) (Portion Not Covered by Ph. 4A - Cell 3)**
Thickness of VSL (ft) = 2.0
Volume of VSL (cy) = 35,816

G.N. Richardson & Associates
Engineering and Geological Services
14 N. Boylan Avenue Tel: 919-828-0577
Raleigh, NC 27603 Fax: 919-828-3899

SHEET: 11/14
JOB #: JOHNSTON-22
DATE: 5/18/06
BY: PKS
CHKD BY:

Johnston County Landfill - C&D - Area 2
Earthwork Quantities

Subgrade Cut and Fill Volumes:

Volume of Cut (cy) =	44,610	**(From AutoCAD - See Attached)**
Volume of Fill (cy) =	77,952	**(From AutoCAD - See Attached)**

Soil Liner Volume:

Area of Soil Liner (Ac.) =	15.8	**(From AutoCAD - See Attached)**
Thickness of Soil Liner (ft) =	1.0	
Volume of Soil Liner (cy) =	25,491	

LCS/Protective Cover Volume:

Area of LCS/Protective Cover (Ac.) =	15.8	**(From AutoCAD - See Attached)**
Thickness of LCS/Protective Cover (ft) =	2.0	
Volume of LCS/Protective Cover (cy) =	50,981	

Periodic Cover Soil Volumes:

Volume of Periodic Cover (cy) =	86,329	**(From Volume/Life Calculations)**

Vegetative Soil Layer (VSL) Volume:

Area of VSL (Ac.) =	15.8	**(From AutoCAD)**
Thickness of VSL (ft) =	2.0	
Volume of VSL (cy) =	50,981	

12/14

volume report 100505.txt

Site Volume Table: Unadjusted

Cut yards	Fill yards	Net yards	Method

Site: PHASE 4A

Cut/Fill

Stratum: paste topo msw to ph4a cell3 sgrd topo-msw-052104-cd-paste phase4a-cell3-sgrd

362	3,275	2,913	(F) Composite

Stratum: topo 0605 to ph4a cell ~~1-2 icvr~~ topo-060205 ph4a-cell1-2-icvr

4,729	573,921	569,192	(F) Composite

Perimeter-Isnae

Remainder cells 1&2

Stratum: paste topo 0605 to ph4a fcvr topo-060205-ph4a-cell1-2-icvr-paste-3 phase4a-fcvr

141	1,450,700	1,450,559	(F) Composite

PH4A-Cell3

13/14

volume report 092905.txt

Site Volume Table: Unadjusted

	Cut yards	Fill yards	Net yards	Method
Site: SITE2				
Stratum: sgrd-cell-6-10 to fcvr-cell-6 sgrd-cell6-10 fcvr-cell6	491	1,521,652	1,521,161	(F) Composite
~~Stratum: sgrd-cell-6-10 to fcvr-cell-7 sgrd-cell6-10 fcvr-cell7~~	~~1,037~~	~~3392987~~	~~3,391,950~~	~~(F) Composite~~
Stratum: paste-sgrd-ph7-to-fcvr-6-8 paste-sgrd-cell6-10-to-fcvr-7 fcvr-cell6-8	100	1,987,263	1,987,163	(F) Composite
Stratum: paste-sgrd-fcvr-ph6 to fcvr-cell7 paste-sgrd-cell6-10-to-fcvr-6 fcvr-cell7	547	1,871,341	1,870,795	(F) Composite
Stratum: topo 032105 to sgrd cell 6 topo-032105 sgrd-cell-6	279,493	55,613	223,879	(C) Composite
Stratum: topo 032105 to sgrd cell 7 topo-032105 sgrd-cell7	222,037	85,202	136,834	(C) Composite
Stratum: topo 032105 to sgrd cell 8 topo-032105 sgrd-cell8	242,630	105,976	136,654	(C) Composite
Stratum: topo 032105 to sgrd cell 9 topo-032105 sgrd-cell9	68,999	178,758	109,759	(F) Composite
Stratum: topo 032105 to sgrd cell 10 topo-032105 sgrd-cell10	151,736	21,326	130,410	(C) Composite

PH6

PH8

PH.7

Index	Surface Pair		Volume			
	Base Surface	Comparison Surface	Cut	Fill	Net	Net Graph
1	TOPO-060205	SGRD	44610.31 Cu. Yd.	77951.65 Cu. Yd.	33341.34 Cu. Yd. <Fill>	
2	PCVR	FCVR CELL 1	302.14 Cu. Yd.	451912.78 Cu. Yd.	451610.63 Cu. Yd. <F...	
3	PCVR CELL 1 PASTE	FCVR	57.90 Cu. Yd.	462726.08 Cu. Yd.	462658.18 Cu. Yd. <F...	

Cell 2

$\Sigma = 914,269$

C&D - Area 2

14/14

PROJECT Johnston County C&D Landfill - Area 2

SUBJECT Anchor Trench Analysis

JOB NO. JOHNSTON-22
DATE 7/14/05
COMPUTED BY PKS
CHECKED BY

Objective To analyze the geomembrane anchor trench to ensure that it will anchor the membrane during normal construction and operation but will pull out before the sheet tears under excessive loads. Note that LLDPE geomembranes do not yield as do HDPE geomembranes.

Assumptions
1. Max. Anchorage (σ_{max}) = 1,300 psi
2. Min. Anchorage (σ_{min}) = 20 psi

Analysis Use the procedure outlined in Equation 3.21 page III-23, "Geosynthetic Design Guidance For Hazardous Waste Landfills & Surface Impoundments."

- Trench Resisting Force (T) (lb/ft):

$$T = \frac{qL\tan\delta + (K_P + K_A)\tan\delta(0.5\gamma d^2 + qd)}{FS_{\min}\cos\beta - \sin\beta\tan\delta}$$

Where:
β = slope angle (degrees)
L = trench set-back from crest (feet)
d = trench depth (feet)
FS_{min} = minimum factor of safety

Backfill Parameters:

ϕ = internal friction angle (degrees)
δ = friction angle between backfill & geomembrane (degrees)
(20 -25+° for textured LLDPE)
γ = backfill unit weight (pcf)
K_A = active soil pressure coef. = $\frac{1-\sin\phi}{1+\sin\phi}$
K_P = Passive Soil Pressure Coefficient
(Varies from K_o (AT REST) = 1 - $\sin\phi$ to $K_P = 1/K_A$)
q = $d\gamma$

Determine T over range of δ. Compute stress in geomembrane by taking T/A, where A = Thickness of Geomembrane (ft) over unit width of 1 foot. Compare stress with allowable anchorage requirements. Also, compare stress of the geomembrane (40 mil LLDPE σ_{break} = 1,500 psi.).

ANCHORTR.WPD

G.N. RICHARDSON & ASSOCIATES
Engineering and Geological Services
14 N. Boylan Avenue, Raleigh, NC 27603
Telephone: (919) 828-0577

G.N. Richardson & Associates
Engineering and Geological Services
14 N. Boylan Avenue
Raleigh, NC 27603
Tel: 919-828-0577
Fax: 919-828-3899

SHEET: 2 /2
JOB #: JOHNSTON-22
DATE: 7/14/05
BY: PKS
CHKD BY:

Johnston County C&D Landfill - Area 2
Anchor Trench Analysis

Input Parameters:

Side Slope Angle: 18.4 degrees

Geomembrane:

Yield Stress (σ_{max}) = 1,500 psi

Thickness = 0.04 in

Backfill Parameters:

Internal Friction Angle (ϕ)= 25 degrees K_A = 0.41

Unit Weight (γ) = 110 pcf K_P = 2.46

Trench Parameters:

Set-Back (L) = 3.0 feet

Depth (d) = 1.5 feet

$FS_{min.}$ = 1.5

Stress Calculations:

δ	tan δ	T (lb/ft)	Stress in GM (psi)	FS_{break}
10	0.176	201.2	419.1	3.6
15	0.268	312.3	650.7	2.3
20	0.364	434.1	904.3	1.7
25	0.466	570.2	1,187.9	1.3

PROJECT Johnston County C&D Landfill - Area 2	SHEET 1 OF 5
	JOB NO. JOHNSTON-22
	DATE 7/14/05
SUBJECT Filter Geotextile Analysis	COMPUTED BY PKS
	CHECKED BY

Objective

To determine the maximum geotextile apparent opening size (AOS) to provide proper retention to protect drainage media from piping and clogging from adjacent soil. Additionally, to determine the minimum required geotextile permittivity to provide proper drainage from the adjacent soil.

References

Koerner, R.M., Designing With Geosynthetics, Fourth Ed., Prentice Hall, Upper Saddle River, N.J., 1999, pp. 84-91.

Mirafi - Geotextile Filter Design, Application, and Product Selection Guide, Ten Cate Nicolon Corp. (www.mirafi.com).

Analysis

Steps 1 and 2:

Determine the application and function of the geotextile (i.e. where the geotextile is to be used and whether retention or permeability is the key function of the material) and also the confining stress (i.e. high - leachate collection system; low - final cover system) and flow conditions (i.e. steady-state - landfill drains; dynamic - shoreline protection).

Step 3:

Determine the soil retention requirements (maximum AOS). For steady-state conditions, use the following chart.

Chart 1. Soil Retention Criteria of Steady-State Flow Conditions

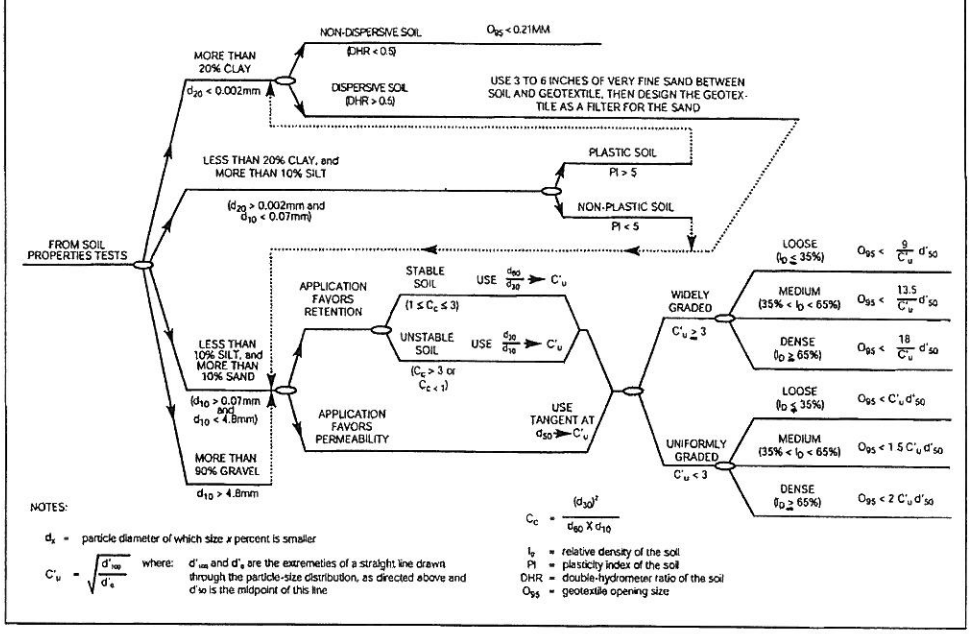

GT FILTER.WPD

G.N. RICHARDSON & ASSOCIATES
Engineering and Geological Services
14 N. Boylan Avenue, Raleigh, NC 27603
Telephone: (919) 828-0577

U.S. Sieve vs. Opening Size:

U.S. Sieve	Opening Size (mm)
100	0.150
80	0.180
70	0.212
60	0.250
50	0.300
40	0.425
30	0.600

Step 4:

Determine the geotextile permittivity requirements:

$$\Psi = \frac{k_g}{t_g} \qquad (\text{sec}^{-1})$$

Where:

Ψ = minimum required geotextile permittivity (sec^{-1})

k_g = minimum allowable geotextile permeability (cm/sec)

$$k_g \geq i_S k_S$$

t_g = geotextile thickness under design load (cm)

i_S = hydraulic gradient (use 1.5 for landfills)

k_S = permeability of retained soil (cm/sec).

Other Considerations:

Other things to consider in the design of a filter geotextile include anti-clogging requirements and survivability/durability requirements. For anti-clogging, it is generally best to use the largest AOS that satisfies the retention criteria. For non-woven geotextiles used in landfill applications, an AOS of 0.21 mm (No. 70 sieve) is typically the largest AOS that is available. For survivability/durability concerns, generally an adequately UV stabilized geotextile made from polypropylene or polyester with an AASHTO M288 Strength Class of 2 is suitable for use in subsurface drainage applications.

G.N. Richardson & Associates
Engineering and Geological Services
14 N. Boylan Avenue
Raleigh, NC 27603
Tel. 919-828-0577
Fax. 919-828-3899

SHEET: 3/5
JOB #: JOHNSTON-22
DATE: 7/14/05
BY: PKS
CHKD BY:

Johnston County C&D Landfill - Area 2
Filter Geotextile Analysis

Application: Drainage Geocomposite (LCS or Final Cover)
Primary Function: Retention
Relative Confining Stress: Low to High
Flow Conditions: Steady-State

	Soil Evaluated		
	B-2	CC-61-P	
Soil Description:	Clayey Silty Sand	Silty Clayey Sand	
Soil Type:	SM	SC-SM	
D_{60}:	0.720	0.340	
D_{50}:	0.600	0.280	
D_{30}:	0.400	0.010	
D_{20}:	0.280	0.001	
D_{10}:	0.007	0.001	
PI:	16	20	
C_c	31.75	0.29	
Soil Dispersion (When Applicable):	Is Soil Dispersive? (Y/N)	Is Soil Dispersive? (Y/N)	
	N	N	
Recommended Maximum AOS (mm) (When Applicable):	**0.210**	**0.210**	
	No. 70 Sieve	**No. 70 Sieve**	
Soil Stability (When Applicable):	NA	NA	
C'_u (When Applicable):			
Soil Relative Density (I_D) (Losse (L), Medium (M), Dense (D) (When Applicable):			
Recommended Maximum AOS (mm) (When Applicable):			
Required Geotextile Properties:	-----	-----	
Hydraulic Gradient (i_s):	1.5	1.5	
Estimated Soil Permeability (k_s) (cm/sec):	5.0E-04	5.0E-04	
Min. Allowable Geotextile Permeability (k_g) (cm/sec):	7.5E-04	7.5E-04	
Geotextile Thickness (t_g) (cm):	0.25	0.25	
Min. Required Geotextile Permittivity (Ψ) (sec^{-1}):	**0.003**	**0.003**	

Typ. Range of Soils
Anticipated As
Protective Cover (LCS)
or Vegetative Soil Layer (FCS)

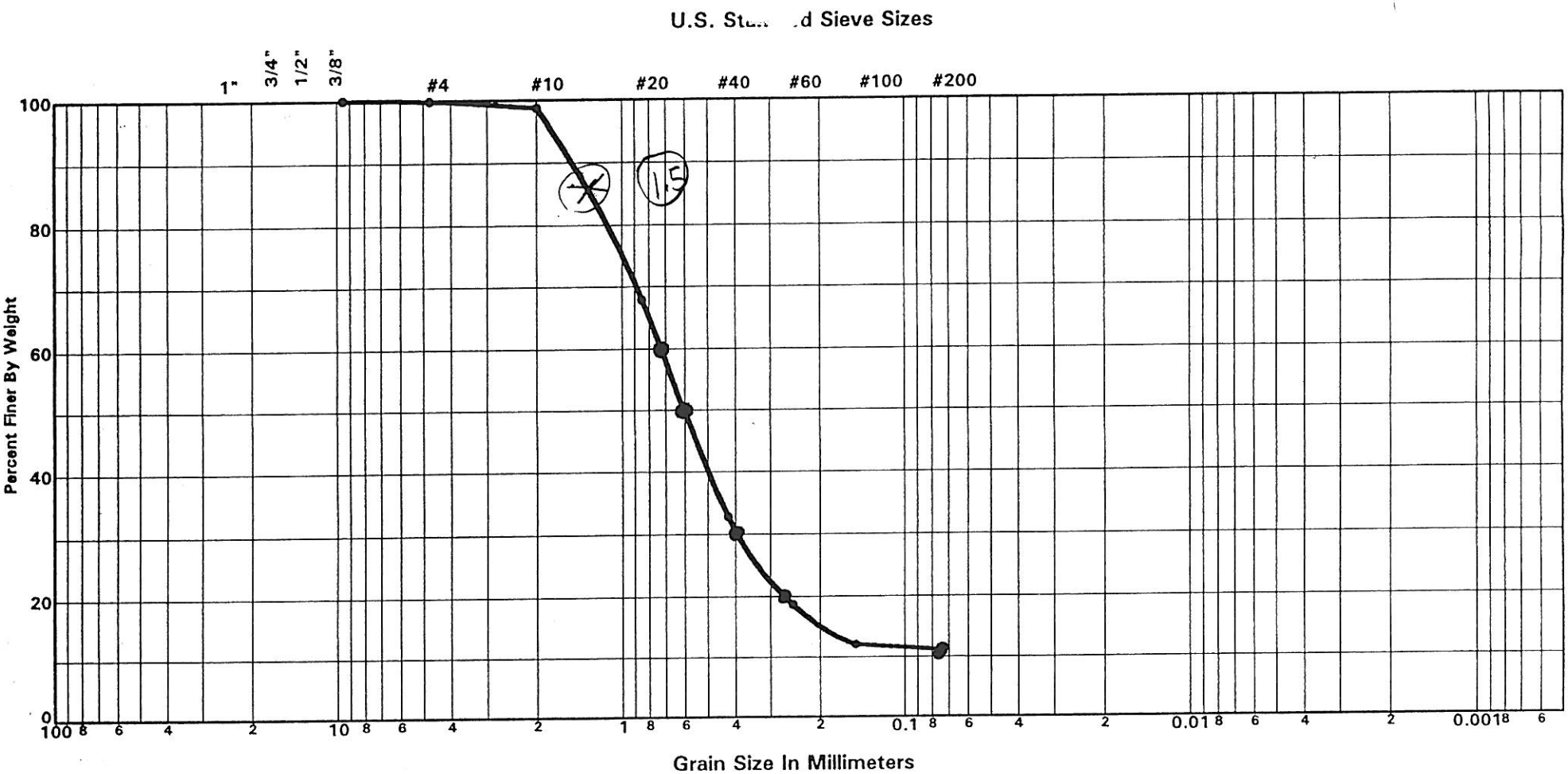

GRAVEL		SAND			FINES	
COARSE	FINE	COARSE	MEDIUM	FINE	SILT SIZES	CLAY SIZES

Boring No.	Elev./Depth	Nat. W.C.	L.L.	P.L.	P.I.	Soil Description or Classification
2			45.0	29.0	16.0	Orange Slightly Clayey Silty SAND (SM)

Project:

G.N. Richardson & Associates Lab Services
Raleigh, North Carolina

Job No.: 1-95-0084 CA

Date: 4/17/98

GRAIN SIZE DISTRIBUTION

GeoTechnologies, Inc.

4/5

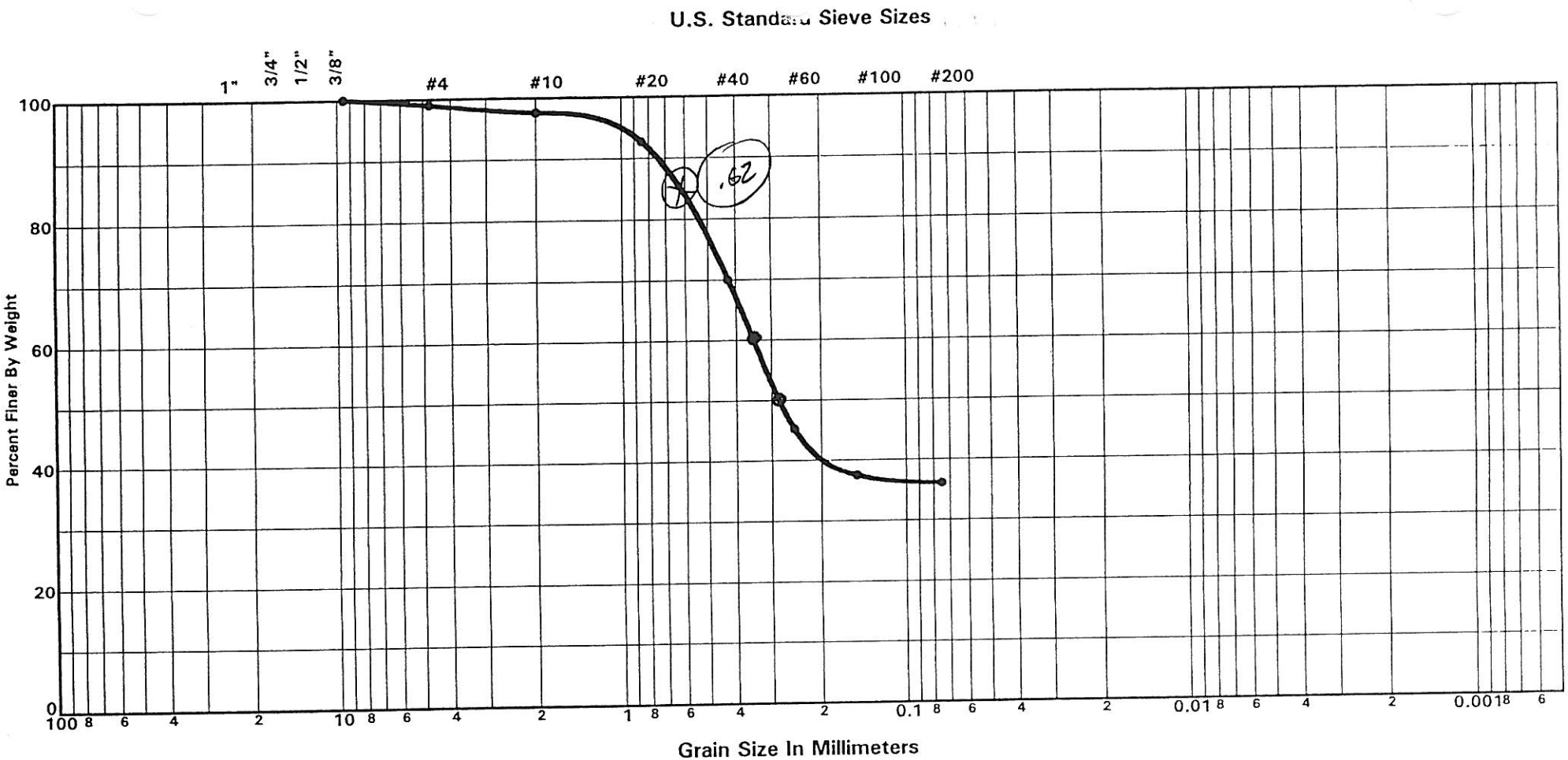

GRAVEL		SAND			FINES	
COARSE	FINE	COARSE	MEDIUM	FINE	SILT SIZES	CLAY SIZES

Boring No.	Elev./Depth	Nat. W.C.	L.L.	P.L.	P.I.	Soil Description or Classification
CC-61-P	3rd Lift		46.0	26.0	20.0	Orange Tan Silty Clayey Medium to Fine SAND (SC-SM)

Project:

Johnston County Landfill
Johnston County, North Carolina

Job No.: 1-98-1034-CA

Date: 12/9/98

GRAIN SIZE DISTRIBUTION

GeoTechnologies, Inc.

5/5

PROJECT Johnston County C&D Landfill - Area 2
JOB NO. JOHNSTON-22
DATE 7/14/05
SUBJECT Cushion Geotextile Analysis
COMPUTED BY PKS
CHECKED BY

Objective To evaluate the required weight of cushion geotextile to adequately protect the base geomembrane against the possibility of puncture.

Reference Koerner, R.M., Designing With Geosynthetics, Fourth Ed., Prentice Hall, Upper Saddle River, N.J., 1999, pp. 535-537.

Richardson, G.N. (1996), "Field Evaluation of Geosynthetic Protective Cushions," *Geotechnical Fabrics Report*, (vol. 14, no. 2, March), pp. 20-25.

Richardson, G.N. and Johnson, S. (1998), "Field Evaluation of Geosynthetic Protective Cushions: Phase 2," *Geotechnical Fabrics Report*, (October - November), pp. 44-49.

Analysis Use the equation given below to determine the required mass per unit area of a cushion geotextile to protect a 60 mil HDPE (40 mil LLDPE in this case) geomembrane under final design loads. The selected cushion geotextile should be a minimum of 12 oz. per square yard to provide adequate protection during construction loading (Richardson, 1996 & 1998).

$$p_{allow} = (50 + 0.00045\frac{M}{H^2})\frac{1}{MS_S\, MF_{PD}\, MF_A} \bullet \frac{1}{RF_{CR}\, RF_{CBD}} \qquad \text{(Koerner Eqn. 5.33)}$$

Where:

p_{allow}	=	allowable pressure (kPa)
	=	p_{actual} x FS
p_{actual}	=	actual pressure (kPa)
FS	=	factor of safety
M	=	geotextile mass per unit area (g/m^2)
H	=	protrusion height (m) (assume H = d_{50} = soil particle size (mm) for which 50% of the total soil is finer)
MF_S	=	modification factor for protrusion shape
MF_{PD}	=	modification factor for packing density
MF_A	=	modification factor for arching in solids
RF_{CR}	=	reduction factor for long-term creep
RF_{CBD}	=	reduction factor for long-term chemical/biological degradation

GT CUSHION.WPD

G.N. Richardson & Associates
Engineering and Geological Services
14 N. Boylan Avenue Tel: 919-828-0577
Raleigh, NC 27603 Fax: 919-828-3899

SHEET: 2/3
JOB #: JOHNSTON-22
DATE: 9/8/05
BY: PKS
CHKD BY:

Johnston County C&D Landfill - Area 2
Cushion Geotextile Analysis

Input Parameters:

Maximum Height of Waste (ft) =	150	**(User Input)**
Waste Density (pcf) =	70	**(User Input)**
P_{actual} (psf) =	10,500	**(=Max Height x Waste Density)**
P_{actual} (kPa) =	503	
Factor of Safety, FS =	3	**(User Input)**
P_{allow} (kPa) =	1,509	

Type of Stone	Stone Information: Stone Angularity	Stone d50 (in)	Stone d50 (mm)	Protrusion Height (m)	Modification Factors: MF_S	MF_{PD}	MF_A	Reduction Factors: RF_{CR}	RF_{CBD}	Geotextile Mass Per Unit Area: (g/m²)	(oz/sy)
Coarse Aggregate (NCDOT No. 57)	Angular	0.750	19.1	0.019	1.00	0.67	0.25	1.5	1.3	357	**10.5**

Dr. Geocomposite w/
2-6 oz Non-Woven
OK

3/3

TABLE 5.18 MODIFICATION FACTORS AND REDUCTION FACTORS FOR GEOMEMBRANE PROTECTION DESIGN USING NONWOVEN NEEDLE-PUNCHED GEOTEXTILES

Modification Factors

MF_S		MF_{PD}		MF_A	
Angular	1.0 *	Isolated	1.0	Hydrostatic	1.0
Subrounded	0.5	Dense, 38 mm	0.83	Geostatic, shallow	0.75
Rounded	0.25	Dense, 25 mm	0.67 *	Geostatic, mod.	0.50
		Dense, 12 mm	0.50	Geostatic, deep	0.25 *

Reduction Factors

RF_{CBD}		RF_{CR}			
		Mass per unit area (g/m^2)	Protrusion (mm) 38	25	12
Mild leachate	1.1	Geomembrane alone	N/R	N/R	N/R
Moderate leachate	1.3 *	270	N/R	N/R	> 1.5
Harsh leachate	1.5	550	N/R	1.5	1.3
		1100	1.3	1.2	1.1
		> 1100	≅ 1.2	≅ 1.1	≅ 1.0

N/R = Not recommended

p_{allow} = allowable pressure using different types of geotextiles and site-specific conditions.

Based on a large number of ASTM 5514 experiments, an empirical relationship for p_{allow} has been obtained, Eq. (5.33). It requires the set of modification factors and reduction factors given in Table 5.18.

$$p_{allow} = \left(50 + 0.00045\frac{M}{H^2}\right)\left[\frac{1}{MF_S \times MF_{PD} \times MF_A}\right]\left[\frac{1}{RF_{CR} \times RF_{CBD}}\right] \quad (5.33)$$

where

p_{allow} = allowable pressure (kPa),
M = geotextile mass per unit area (g/m^2),
H = protrusion height (m),
MF_S = modification factor for protrusion shape,
MF_{PD} = modification factor for packing density,
MF_A = modification factor for arching in solids,
RF_{CR} = reduction factor for long-term creep, and
RF_{CBD} = reduction factor for long-term chemical/biological degradation.

Note that in the above all MF values ≤ 1.0 and all RF values ≥ 1.0.

REF: DESIGNING WITH GEOSYNTHETICS, KOERNER 4th EDITION, 1997

PROJECT Johnston County C&D Landfill - Area 2	SHEET 1 OF 3
	JOB NO. JOHNSTON-22
	DATE 7/14/05
SUBJECT Leachate Collection Pipe Spacing	COMPUTED BY PKS
	CHECKED BY

Objective

To evaluate the required leachate collection pipe spacing which will maintain at most 1 foot of head on the geomembrane under Normal Operating Conditions. Analysis will calculate the maximum head using required values for permeability (leachate collection media) or transmissivity (drainage geocomposite). If the selected pipe spacing indicates an acceptable head, then the selected pipe spacing is acceptable.

References

McEnroe, Bruce (1993), "Maximum Saturated Depth Over Landfill Liners," Journal of Environmental Engineering, Vol. 119, No. 2, pp. 262-270.

Richardson, G.N., Giroud, J-P. and Zhao, A. (2000), Design of Lateral Drainage Systems for Landfills, Tenax Corp., Baltimore.

Analysis

The McEnroe equations require the input of an impingement rate, a drainage media permeability, pipe spacing, and a liner slope. This information is used to find the maximum head on the liner. The McEnroe solution is for three cases (see figure below). Case 1 is for a saw-tooth bottom, with the liquid mound overtopping the peak. Case 2 has the liquid mound starting at the peak of the saw-tooth. Case three has the mound starting below the peak of the tooth. Cases two and three are appropriate for modeling a liner on an infinite slope with collector pipes uniformly spaced down the slope.

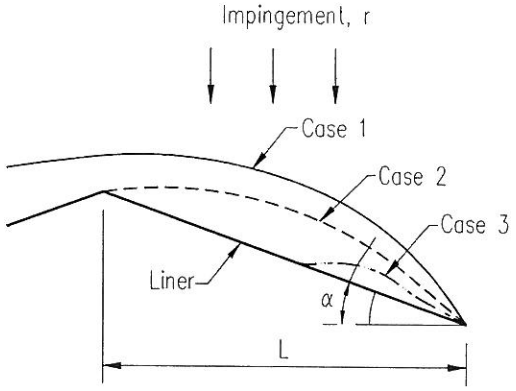

LCS PIPE SPACE.WPD

G.N. RICHARDSON & ASSOCIATES
Engineering and Geological Services
14 N. Boylan Avenue, Raleigh, NC 27603
Telephone: (919) 828-0577

Step 1: Input the necessary physical factors: slope, permeability and impingement rate.

Step 2: The controlling value R is calculated

$$R = \frac{r}{k \sin^2 \alpha}$$

Where:
- r = impingement rate
- k = permeability of the drainage media (for Drainage Geocomposite, k = transmissivity/thickness)
- α = slope angle of the liner

Step 3: The maximum head is calculated, using a formula dependent on the value of R:

For R > 1/4 (Case 1):

$$h_{\max} = SL\left(R - RS + R^2S^2\right)^{\frac{1}{2}} \exp\left[\frac{1}{B}\arctan\left(\frac{2RS-1}{B}\right) - \frac{1}{B}\arctan\left(\frac{2R-1}{B}\right)\right]$$

For R = 1/4 (Case 2):

$$h_{\max} = SL\frac{R(1-2RS)}{1-2R}\exp\left[\frac{2R(S-1)}{(1-2RS)(1-2R)}\right]$$

For R < 1/4 (Case 3):

$$h_{\max} = SL\left(R - RS + R^2S^2\right)^{\frac{1}{2}}\left[\frac{(1-A-2R)(1+A-2RS)}{(1+A-2R)(1-A-2RS)}\right]^{\frac{1}{2A}}$$

Where:
- h_{max} = maximum head (m - convert to desired units)
- L = horizontal length of pipe spacing or distance to peak (m) (see figure above)
- S = liner slope (m/m)
- A = $(1 - 4R)^{0.5}$
- B = $(4R - 1)^{0.5}$

G.N. Richardson & Associates
Engineering and Geological Services
14 N. Boylan Avenue
Raleigh, NC 27603
Tel: 919-828-0577
Fax: 919-828-3899

SHEET: 3 / 3
JOB #: JOHNSTON-22
DATE: 9/8/05
BY: PKS
CHKD BY:

Johnston County C&D Landfill - Area 2
Leachate Collection Pipe Spacing

Drainage Geocomposite:

Maximum Allowable Head (h_{max}):	0.25 inches	(= Thickness of Geonet Drainage Core)
Impingement (r):	1.3E-06 cm/sec	(= 1,200 gpad - Conservative for Active Case Based on HELP Model)
Drainage Geocomposite Transmissivity (θ):	7.5E-04 m^3/m/sec	(Specified Minimum)
Thickness of Geonet Drainage Core:	0.25 inches	(Specified Minimum)
Reduction Factors for Drainage Geocomposite:		(Per Richardson, Zhao, & Giroud)
$RF_{intrusion}$:	1.2	
RF_{creep}:	2.0	
$RF_{chemical\ clogging}$:	2.0	
$RF_{biological\ clogging}$:	2.0	
Overall Factor of Safety:	2.0	
Reduction Factor for Drainage Geocomposite in LCS:	19.2	(Conservative for Short-Term Load on Geocomposite)
Design Drainage Geocomposite Transmissivity (θ):	3.9E-05 m^3/m/sec	
Design Drainage Geocomposite Permeability (k):	0.62 cm/sec	(Design Transmissivity/Thickness of Geonet Drainage Core)

Slope (%)	Slope (Deg.)	S	R	Pipe Spacing (ft)	Pipe Spacing (m)	A	B	h_{max} (in) R < 0.25	R = 0.25	R > 0.25	Comment
2	1.15	0.020	0.00529	200	61.0	0.989	NA	0.25	N/A	N/A	O.K.
2.2	1.26	0.022	0.00437	200	61.0	0.991	NA	0.23	N/A	N/A	O.K.

Flow In Net - O.K. << 1'

Note: Spreadsheet Converts Units as Required.

PROJECT Johnston County C&D Landfill - Area 2

SUBJECT Leachate Collection Pipe Sizing

JOB NO. JOHNSTON-22
DATE 7/14/05
COMPUTED BY PKS
CHECKED BY

Objective To design leachate collection pipes to handle the maximum leachate generation rate.

References

Cedargren, Harry R. (1974), Drainage of Highway and Airfield Pavements, John Wiley & Sons, New York, pp. 166-167.

Debo, T.N., and Reese, A.J. (1995), Municipal Storm Water Management, Lewis Publishers, Boca Raton, FL, pp. 438-442.

Malcom, H. Rooney (1989), Elements of Urban Stormwater Design, N.C. State University, Raleigh, NC.

Analysis

1. For each pipe size, determine the maximum area (A), to handle the predicted flow (Q) with an added factor of safety. Compare the full flow capacity of each pipe size with the calculated peak flow rate to verify the desired factor of safety. Also, analyze leachate collection pipes based on partial flow to determine flow depth and velocity.

2. Determine the allowable perforation size for leachate collection pipes based on the size of the stone in the gravel columns.

3. Analyze leachate collection pipe perforations as orifice flow to ensure adequate flow capacity into collection piping.

Calculations

- Determine Peak Flow Rate:

Use the peak daily leachate generation rate from the active condition (see leachate generation calculations).

Determine the drainage area (A) to each pipe such that $Q_{max}/Q \geq 2.0$, where Q_{max} is the full flow capacity (see below).

LCS PIPE SIZE.WPD

G.N. RICHARDSON & ASSOCIATES
Engineering and Geological Services
14 N. Boylan Avenue, Raleigh, NC 27603
Telephone: (919) 828-0577

- Leachate Collection Pipes:

Determine Flow Capacity (Q_{max}):

$$Q_{max} = \frac{0.463 D^{\frac{8}{3}} S^{\frac{1}{2}}}{n}$$ (D&R Equation 8.24)

Where:
Q_{max} = Flow capacity (cfs)
D = Pipe inside diameter (in)
S = Pipe slope (ft/ft)
n = Manning's roughness coefficient

Determine Factor of Safety (FS):

$$FS = \frac{Q_{max}}{Q}$$

Determine Flow Depth:

$$h = \frac{1}{2}\left(1 - \cos\left(\frac{\theta}{2}\right)\right) D$$ (D&R Equation 8.29)

Where:
h = Flow depth (inches)
θ = Central angle

$$\theta = \frac{3\pi}{2}\left[1 - (1 - \pi K)^{\frac{1}{2}}\right]^{\frac{1}{2}}$$ (D&R Equation 8.28)

K = Constant

$$K = 0.673 Q_n^{\frac{-8}{3}} S^{\frac{-1}{2}}$$ (D&R Equation 8.27)

Determine Flow Velocity:

$$V = \frac{Q}{A} = \frac{Q}{D^2 \frac{(\theta - \sin\theta)}{8}}$$ (D&R Equation 8.30 for "A")

Where: V = Flow velocity (ft/sec)
A = Cross-sectional area of flow (ft^3)

- Leachate Collection Pipe Perforations:

Determine Maximum Allowable Size of Perforations (D_{max}):

$$D_{max} = \frac{D_{85}}{F}$$ (Reformulation of Cedargren Equation 5.11)

Where: D_{max} = Maximum perforation diameter to provide particle retention
D_{85} = Particle size of pipe bedding material for which 85% by weight of the particles are finer
F = Factor varying between 1 and 2 (F = 1.2 for slots)

Determine Flow Capacity (Q_{max}):

$$Q_{max} = C_d A \sqrt{2gh}$$ (Malcom Equation I-7)

Where: Q_{max} = Flow capacity (cfs)
C_d = Coefficient of discharge
A = Cross-sectional area of flow (ft^3)
g = Acceleration of gravity (32.2 ft/sec^2)
h = Driving head - centroid of orifice to water surface (ft)

Determine Factor of Safety (FS):

$$FS = \frac{Q_{max}}{Q}$$

G.N. Richardson & Associates
Engineering and Geological Services
14 N. Boylan Avenue Tel: 919-828-0577
Raleigh, NC 27603 Fax: 919-828-3899

SHEET: 4/4
JOB #: ABC-1
DATE: 8/29/05
BY: PKS
CHKD BY:

Johnston County C&D Landfill - Area 2
Leachate Collection System (LCS) Pipe Sizing - HDPE Pipe

Input Parameters:

Manning's Rougness Coefficient =	**0.009**		**(HDPE Pipe)**
Design Leachate Flow =	**14,000**	gal/acre/day	**(Peak Daily Leachate Generation - Active Condition)**
Design Leachate Flow =	0.02	cfs/acre	
Orifice Coef. Of Discharge (LCS Pipe Perforations) =	**0.6**		

LCS Piping

ID	Drainage Area (AC)	Peak Flow Rate (Q) (CFS)	Pipe I.D. (IN)	Pipe Slope (%)	Flow Capacity (Q_{max}) (CFS)	Factor of Safety (>/= 2.0)	K (CONSTANT)	θ (< 265°)	Flow Depth (IN)	Flow Area (SF)	Flow Velocity (FPS)
Max. Area - 6"	**17.0**	0.37	**5.8**	**1**	0.74	2.0	0.155	181	2.93	0.09	3.96

> Max. - O.K.

LCS Pipe Perforations

Determine Maximum Perforation Size:

Stone Used for Pipe Bedding:	**No. 57**		
D_{85} =	**0.750**	inches	**(Typ. for No. 57 Stone)**
F =	**1.5**		
Max. Diameter - Circular Holes/Max. Width - Slots =	0.50	inches	

Circular Holes

ID	Drainage Area (AC)	Peak Flow Rate (Q) (CFS)	Hole Diameter (IN)	Allowable Head (IN)	X-Sectional Area (SF/Hole)	Flow Capacity (Q_{max}) (CFS/Hole)	No. Holes/LF	Min. Length of Collection Pipe (FT)	Actual Length of Collection Pipe (FT)	Factor of Safety (>/= 2.0)
Max. Area - 6"	**14.1**	0.31	**0.50**	**4**	0.001	0.004	**4**	20	300	14.9

Note: Conservatively Neglects Upper Holes (Where Used).

LCS Pipe Dimensions

Standard Dimension Ratio (SDR) of Pipe = **17** **(From Pipe Stress Calculations)**

Nominal Pipe Size (IN)	Pipe O.D. (IN)	Min. Wall Thickness (IN)	Pipe I.D. (IN)
6	**6.625**	0.390	5.8

Note: User Input Values are in **Bold**.

Objective Evaluate collection pipe stresses due to long-term static (overburden) and short-term dynamic (equipment) loads. For long-term static loads, check crushing and buckling failure modes as well as ring deflection. For short-term dynamic loads, check crushing failure mode.

References

The Performance Pipe Engineering Manual, (2002), CPChem Performance Pipe, Chapters 5 and 7.

Guidelines for HDPE Pipes in Deep Fills, (1998), Chevron Phillips Chemical Co.

Driscopipe Systems Design Manual, (1991), Phillips Driscopipe, Inc., p. 47.

Holtz, R.D., & Kovacs, W.D. (1981), An Introduction To Geotechnical Engineering, Prentice-Hall, Englewood Cliffs, NJ, p. 348.

Analysis Use FS_{min} (Static) = 2.0, FS_{min} (Dynamic) = 2.0.

Equations

- Crushing Failure:

$$S = \left(\frac{P_T}{288}\right) SDR$$ (Perf. Pipe Eng. Man. Eq. 7-23)

Where: S = Compressive Stress in Pipe Wall (psi)

SDR = Standard Dimensional Ratio = $\frac{Outside\ Diameter}{Thickness}$

P_T = External Pressure (psf)

$$FS_{crush} = \frac{\sigma_{yield}(HDPE = 1{,}600\,psi)}{S}$$

HDPE PIPE STRESS.WPD

- Buckling Failure (Constrained Wall):

$$P_{CR} = 1.63\sqrt{\frac{RB'E'E}{(SDR-1)^3}}$$ (Guidelines - HDPE - Deep Fills - Eq. 10)

Where:

P_{CR} = Critical Buckling Soil Pressure (psi)

R = Groundwater Buoyancy Factor

$$= 1 - 0.33\frac{H_{GW}}{H}$$

B' = Elastic Support Coefficient

$$= \frac{1}{1+4e^{(-0.065H)}}$$

E' = Constrained Soil Modulus (psi) (See Attached Table)

H = Height of Fill (ft)

H_{GW} = Height of Groundwater (ft)

E = Long-Term Modulus of Elasticity of Pipe (psi) (See Attached Table)

$$FS_{buckle} = \frac{P_T}{P_{CR}}$$

- Ring Deflection:

For constrained HDPE pipe, pipe deflection equals the strain in the surrounding bedding soil. The safe pipe deflection for each SDR is shown on the attached table.

Pipe Deflection (%) = $\frac{P_T}{E'}$ (Driscopipe p. 47)

-Equipment Loading:

Line Loads: (H&K Eq. 8-26)

$$P_T = P_L = \frac{2WZ^3}{\pi Z^5}$$

Point Loads: (Perf. Pipe Eng. Man. Eq. 7-13)

$$P_T = P_P = \frac{3WZ^3}{2\pi Z^5}$$

Where: W = Dynamic Equipment Load (lbs/ft or lbs) (= 1.5 times weight of machine)

Z = Vertical Distance From the Point of Loading to the Top of the Pipe (feet)

Using the above calculations for P_T, calculate the factor of safety for crushing failure as shown above.

Table : Typical Design Values* for Constrained Modulus, E'

Vertical Soil Stress (psi)	Gravelly Sand/Gravels 95% Std. Proctor (psi)	Gravelly Sand/Gravels 90% Std. Proctor (psi)	Gravelly Sand/Gravels 85% Std. Proctor (psi)
10	3000	1500	500
20	3500	1700	650
40	4500	2100	900
60	5500 *	2500	1150
80	6000	2900	1300
100	6500	3200	1450

(GUIDELINES FOR HDPE PIPE IN DEEP FILLS - TABLE 1)

Table · Typical Elastic Modulus for DRISCOPLEX™ PE 3408

Load Duration	Elastic Modulus†, 1000 psi (MPa), at Temperature, °F (°C)							
	-20 (-29)	0 (-18)	40 (4)	60 (16)	73 (23)	100 (38)	120 (49)	140 (60)
Short-Term	300.0 (2069)	260.0 (1793)	170.0 (1172)	130.0 (896)	110.0 (758)	100.0 (690)	65.0 (448)	50.0 (345)
10 h	140.8 (971)	122.0 (841)	79.8 (550)	61.0 (421)	57.5 (396)	46.9 (323)	30.5 (210)	23.5 (162)
100 h	125.4 (865)	108.7 (749)	71.0 (490)	54.3 (374)	51.2 (353)	41.8 (288)	27.2 (188)	20.9 (144)
1000 h	107.0 (738)	92.8 (640)	60.7 (419)	46.4 (320)	43.7 (301)	35.7 (246)	23.2 (160)	17.8 (123)
1 y	93.0 (641)	80.6 (556)	52.7 (363)	40.3 (278)	38.0 (262)	31.0 (214)	20.2 (139)	15.5 (107)
10 y	77.4 (534)	67.1 (463)	43.9 (303)	33.5 (231)	31.6 (218)	25.8 (178)	16.8 (116)	12.9 (89)
50 y	69.1 (476)	59.9 (413)	39.1 (270)	29.9 (206)	* 28.2 (194)	23.0 (159)	15.0 (103)	11.5 (79)

† Typical values based on ASTM D 638 testing of molded plaque material specimens.

(PERFORMANCE PIPE ENG. MANUAL - TABLE 5-1)

Table · Safe Pressure Pipe Deflection

DR	Safe Deflection as % of Diameter
32.5	8.5
26	7.0
21	6.0
17	5.0
13.5	4.0
11	3.0
9	2.5

(PERFORMANCE PIPE ENG. MANUAL - TABLE 7-9)

G.N. Richardson & Associates
Engineering and Geological Services
14 N. Boylan Avenue Tel: 919-828-0577
Raleigh, NC 27603 Fax: 919-828-3899

SHEET: 5 / 5
JOB #: JOHNSTON-22
DATE: 9/8/05
BY: PKS
CHKD BY:

Johnston County C&D Landfill - Area 2
HDPE Pipe Stress Analysis - LCS Piping

Case 1: Long-Term Static Loading

>> >Max.

Max. Height of Fill (H) (ft) = 150
Avg. Unit Weight (pcf) = 70

Max. Vertical Stress (P_T) (psf) = 10,500
Max. Vertical Stress (P_T) (psi) = 73

Height of Groundwater (H_{GW}) (ft) = 1 **(12" Max. Head)**
Constrained Soil Modulus (E') (psi) = 5,500
Long-Term Modulus of Elasticity of Pipe (E) (psi) = 28,200
Groundwater Buoyancy Factor (R) = 0.998
Elastic Support Coefficient (B') = 1.000

Calculate Safety Factors Against Crushing, Buckling, and Ring Deflection:

SDR	S (psi)	E (psi)	P_{CR} (psi)	FS_{Crush}	FS_{Buckle}	Ring Defl. (%)	Comment
17	620	28,200	317	2.58	4.34	1.3	**O.K.**
13.5	492	28,200	459	3.25	6.29	1.3	**O.K.**
11	401	28,200	641	3.99	8.79	1.3	**O.K.**

Case 2: Short-Term Dynamic (Equipment) Loading

SDR (Determine From Static Loading Analysis) = 17

Line Loads:

Equipment	Weight* (lbs)	Track Length (ft)	Dynamic Line Loads (psi) 6" Cover	12" Cover	18" Cover	S 6" Cover	12" Cover	18" Cover	FS 6" Cover	12" Cover	18" Cover
D4 Bulldozer (D4C-II)	19,485	6.74	19	10	6	163	81	54	9.8	19.6	29.5
D6 Bulldozer (D6H-II)	46,305	8.63	36	18	12	302	151	101	5.3	10.6	15.9
D8 Bulldozer (D8L)	95,838	10.5	61	30	20	514	257	171	3.1	6.2	9.3
953 Track Loader	37,560	7.5	33	17	11	282	141	94	5.7	11.3	17.0
963Track Loader	48,914	8.08	40	20	13	341	171	114	4.7	9.4	14.1

Point Loads:

Equipment	Weight* (lbs)	Number of Tires	Dynamic Point Loads (psi) 6" Cover	12" Cover	18" Cover	S 6" Cover	12" Cover	18" Cover	FS 6" Cover	12" Cover	18" Cover
950 Wheel Loader	48,628	4	242	60	27	2,056	514	228	0.8	3.1	7.0
615 Scraper	91,000	4	453	113	50	3,847	962	427	0.4	1.7	3.7
621 Scraper	115,195	4	573	143	64	4,870	1,217	541	0.3	1.3	3.0
816B Compactor	45,477	4	226	57	25	1,923	481	214	0.8	3.3	7.5
826C Compactor	69,733	4	347	87	39	2,948	737	328	0.5	2.2	4.9

* Includes Blades, Loaded Buckets, etc.

OPS, RESTRICTIONS HANDLE THIS

PROJECT Johnston County C&D Landfill - Area 2
JOB NO. JOHNSTON-22
DATE 10/6/05
SUBJECT Evaluation of Leachate Generation Rates
COMPUTED BY PKS
CHECKED BY

Objective To predict leachate generation rates for various operational conditions and evaluate rates of removal for the "surge" condition.

Assumptions Assume four operational conditions as follows:

Open - Small quantity of waste in cell; almost all of runoff is leachate
Active - One 10 foot lift of waste in place; no runoff
Interim - 40 feet of waste in place under intermediate cover
Final - Final cover in-place; minimal infiltration.

Assume that the design storm for the landfill unit during initial filling (placement of initial lift of waste over open cells) is the 1-year 24-hour storm. This value is used to estimate leachate generation for "open" conditions.

Assumed empirical leachate generation rates are as follows for the above operational conditions:

Active - 1,200 gallons/acre/day
Interim - 500 gallons/acre/day
Final - 100 gallons/acre/day.

These rates are based on back calculations from observed generation rates from High Point, NC (Phase 1), Alamance County, NC, and several New York facilities (Reference Robert Pheneuf (NY-DEC)).

Analysis

Step 1: Determine the leachate generation rates for the above conditions using the HELP (v. 3.07) Model. These rates are as follows (see attached computer output files):

Active - 678 gallons/acre/day
Interim - 537 gallons/acre/day
Final - 0.11 gallons/acre/day.

Step 2: Compare results from the HELP Model with the empirical rates shown above. In that the empirical results are greater (or about the same), use the empirical values in estimating the leachate generation rates.

LEACHATEGENERATION.WPD

G.N. RICHARDSON & ASSOCIATES
Engineering and Geological Services
14 N. Boylan Avenue, Raleigh, NC 27603
Telephone: (919) 828-0577

Step 3: Estimate leachate generation rates using empirical values for the various conditions expected before, during, and after landfill operations. In this case, leachate generation rates are predicted for the following scenarios:

A. Completion of Phase 5 and Phase 4A - Cells 1 and 2 (MSW) operations (Phase 5 and Phase 4A - Cells 1 and 2 (MSW) under Interim conditions);

B. Initial filling of Area 2 (various areas under Open, Active, and Interim conditions) (maximum value is taken as the surge event for Area 2); and

C. Waste covers Area 2 (no areas Open; various areas under Active and Interim conditions) (maximum value is taken as the typical generation rate for Area 2).

Step 4: Based on the leachate generation rates determined above, estimate the pumping rates required to ensure that enough capacity remains in the leachate storage lagoon to handle the surge event. Also, estimate the days of capacity for the lagoon under typical Area 2 operations.

3/12

HYDROLOGIC EVALUATION OF LANDFILL PERFORMANCE
HELP MODEL VERSION 3.07 (1 NOVEMBER 1997)
DEVELOPED BY ENVIRONMENTAL LABORATORY
USAE WATERWAYS EXPERIMENT STATION
FOR USEPA RISK REDUCTION ENGINEERING LABORATORY

```
PRECIPITATION DATA FILE:     D:\PKSFIL~1\2ENGPR~1\HELP3\RALNCP.D4
TEMPERATURE DATA FILE:       D:\PKSFIL~1\2ENGPR~1\HELP3\RALNCT.D7
SOLAR RADIATION DATA FILE:   D:\PKSFIL~1\2ENGPR~1\HELP3\RALNCS.D13
EVAPOTRANSPIRATION DATA:     D:\PKSFIL~1\2ENGPR~1\HELP3\RALNCE.D11
SOIL AND DESIGN DATA FILE:   D:\PKSFIL~1\2ENGPR~1\HELP3\JCACTIV.D10
OUTPUT DATA FILE:            D:\PKSFIL~1\2ENGPR~1\HELP3\JCACTIV.OUT
```

TIME: 18:21 DATE: 7/14/2005

TITLE: Johnston County C&DLF - Area 2 - Active Condition

NOTE: INITIAL MOISTURE CONTENT OF THE LAYERS AND SNOW WATER WERE COMPUTED AS NEARLY STEADY-STATE VALUES BY THE PROGRAM.

LAYER 1

TYPE 1 - VERTICAL PERCOLATION LAYER
MATERIAL TEXTURE NUMBER 7

```
THICKNESS                    =      6.00   INCHES
POROSITY                     =      0.4730 VOL/VOL
FIELD CAPACITY               =      0.2220 VOL/VOL
WILTING POINT                =      0.1040 VOL/VOL
INITIAL SOIL WATER CONTENT   =      0.2357 VOL/VOL
EFFECTIVE SAT. HYD. COND.    =  0.520000001000E-03 CM/SEC
```

NOTE: SATURATED HYDRAULIC CONDUCTIVITY IS MULTIPLIED BY 3.00 FOR ROOT CHANNELS IN TOP HALF OF EVAPORATIVE ZONE.

LAYER 2

TYPE 1 - VERTICAL PERCOLATION LAYER
MATERIAL TEXTURE NUMBER 18

```
THICKNESS                    =    120.00   INCHES
POROSITY                     =      0.6710 VOL/VOL
FIELD CAPACITY               =      0.2920 VOL/VOL
WILTING POINT                =      0.0770 VOL/VOL
INITIAL SOIL WATER CONTENT   =      0.3065 VOL/VOL
EFFECTIVE SAT. HYD. COND.    =  0.100000005000E-02 CM/SEC
```

LAYER 3

TYPE 1 - VERTICAL PERCOLATION LAYER
MATERIAL TEXTURE NUMBER 7

```
THICKNESS                    =     24.00   INCHES
POROSITY                     =      0.4730 VOL/VOL
FIELD CAPACITY               =      0.2220 VOL/VOL
WILTING POINT                =      0.1040 VOL/VOL
INITIAL SOIL WATER CONTENT   =      0.2309 VOL/VOL
EFFECTIVE SAT. HYD. COND.    =  0.520000001000E-03 CM/SEC
```

LAYER 4

TYPE 2 - LATERAL DRAINAGE LAYER
MATERIAL TEXTURE NUMBER 20

```
THICKNESS                    =      0.25   INCHES
POROSITY                     =      0.8500 VOL/VOL
FIELD CAPACITY               =      0.0100 VOL/VOL
WILTING POINT                =      0.0050 VOL/VOL
INITIAL SOIL WATER CONTENT   =      0.0100 VOL/VOL
EFFECTIVE SAT. HYD. COND.    =   10.0000000000     CM/SEC
SLOPE                        =      2.00   PERCENT
DRAINAGE LENGTH              =    200.0    FEET
```

LAYER 5

TYPE 4 - FLEXIBLE MEMBRANE LINER
MATERIAL TEXTURE NUMBER 36

```
THICKNESS                    =      0.04   INCHES
POROSITY                     =      0.0000 VOL/VOL
FIELD CAPACITY               =      0.0000 VOL/VOL
WILTING POINT                =      0.0000 VOL/VOL
INITIAL SOIL WATER CONTENT   =      0.0000 VOL/VOL
EFFECTIVE SAT. HYD. COND.    =  0.399999993000E-12 CM/SEC
FML PINHOLE DENSITY          =      1.00   HOLES/ACRE
FML INSTALLATION DEFECTS     =      8.00   HOLES/ACRE
FML PLACEMENT QUALITY        =  3 - GOOD
```

LAYER 6

TYPE 3 - BARRIER SOIL LINER
MATERIAL TEXTURE NUMBER 0

```
THICKNESS                    =     12.00   INCHES
POROSITY                     =      0.4750 VOL/VOL
FIELD CAPACITY               =      0.3780 VOL/VOL
WILTING POINT                =      0.2650 VOL/VOL
INITIAL SOIL WATER CONTENT   =      0.4750 VOL/VOL
EFFECTIVE SAT. HYD. COND.    =  0.999999975000E-05 CM/SEC
```

GENERAL DESIGN AND EVAPORATIVE ZONE DATA

NOTE: SCS RUNOFF CURVE NUMBER WAS COMPUTED FROM DEFAULT SOIL DATA BASE USING SOIL TEXTURE # 7 WITH BARE GROUND CONDITIONS, A SURFACE SLOPE OF 2.% AND A SLOPE LENGTH OF 300. FEET.

```
SCS RUNOFF CURVE NUMBER              =     88.20
FRACTION OF AREA ALLOWING RUNOFF     =      0.0    PERCENT
AREA PROJECTED ON HORIZONTAL PLANE   =      1.000  ACRES
EVAPORATIVE ZONE DEPTH               =     22.0    INCHES
INITIAL WATER IN EVAPORATIVE ZONE    =      5.966  INCHES
UPPER LIMIT OF EVAPORATIVE STORAGE   =     13.574  INCHES
LOWER LIMIT OF EVAPORATIVE STORAGE   =      1.856  INCHES
INITIAL SNOW WATER                   =      0.000  INCHES
INITIAL WATER IN LAYER MATERIALS     =     49.441  INCHES
TOTAL INITIAL WATER                  =     49.441  INCHES
TOTAL SUBSURFACE INFLOW              =      0.00   INCHES/YEAR
```

EVAPOTRANSPIRATION AND WEATHER DATA

NOTE: EVAPOTRANSPIRATION DATA WAS OBTAINED FROM RALEIGH NORTH CAROLINA

```
STATION LATITUDE                         = 35.87 DEGREES
MAXIMUM LEAF AREA INDEX                  =  2.00
START OF GROWING SEASON (JULIAN DATE)    =    86
END OF GROWING SEASON (JULIAN DATE)      =   310
EVAPORATIVE ZONE DEPTH                   = 22.0  INCHES
AVERAGE ANNUAL WIND SPEED                =  7.70 MPH
AVERAGE 1ST QUARTER RELATIVE HUMIDITY    = 66.00 %
AVERAGE 2ND QUARTER RELATIVE HUMIDITY    = 70.00 %
AVERAGE 3RD QUARTER RELATIVE HUMIDITY    = 78.00 %
AVERAGE 4TH QUARTER RELATIVE HUMIDITY    = 72.00 %
```

NOTE: PRECIPITATION DATA WAS SYNTHETICALLY GENERATED USING COEFFICIENTS FOR RALEIGH NORTH CAROLINA

NORMAL MEAN MONTHLY PRECIPITATION (INCHES)

JAN/JUL	FEB/AUG	MAR/SEP	APR/OCT	MAY/NOV	JUN/DEC
3.55	3.43	3.69	2.91	3.67	3.66
4.38	4.44	3.29	2.73	2.87	3.14

NOTE: TEMPERATURE DATA WAS SYNTHETICALLY GENERATED USING COEFFICIENTS FOR RALEIGH NORTH CAROLINA

NORMAL MEAN MONTHLY TEMPERATURE (DEGREES FAHRENHEIT)

JAN/JUL	FEB/AUG	MAR/SEP	APR/OCT	MAY/NOV	JUN/DEC
39.60	41.60	49.30	59.50	67.20	73.90
77.70	77.00	71.00	59.70	50.00	42.00

NOTE: SOLAR RADIATION DATA WAS SYNTHETICALLY GENERATED USING COEFFICIENTS FOR RALEIGH NORTH CAROLINA AND STATION LATITUDE = 35.87 DEGREES

AVERAGE MONTHLY VALUES IN INCHES FOR YEARS 1 THROUGH 20

	JAN/JUL	FEB/AUG	MAR/SEP	APR/OCT	MAY/NOV	JUN/DEC
PRECIPITATION						
TOTALS	3.44	2.92	3.81	2.20	4.34	3.74
	4.24	5.43	2.40	2.87	3.05	2.80
STD. DEVIATIONS	2.07	1.23	1.51	1.52	2.22	1.98
	1.91	3.72	1.67	2.00	1.79	1.04
RUNOFF						
TOTALS	0.000	0.000	0.000	0.000	0.000	0.000
	0.000	0.000	0.000	0.000	0.000	0.000
STD. DEVIATIONS	0.000	0.000	0.000	0.000	0.000	0.000
	0.000	0.000	0.000	0.000	0.000	0.000
EVAPOTRANSPIRATION						
TOTALS	1.404	1.729	2.964	2.732	4.210	4.665
	4.191	4.168	2.641	1.296	1.141	1.022
STD. DEVIATIONS	0.154	0.243	0.311	0.925	0.790	1.464
	1.513	1.292	1.115	0.405	0.153	0.172
LATERAL DRAINAGE COLLECTED FROM LAYER 4						
TOTALS	1.1493	1.7106	1.6137	1.2909	0.6079	0.5976
	0.2564	0.1102	0.6624	0.2594	0.1671	0.6833
STD. DEVIATIONS	0.8153	1.1576	1.1032	1.0332	0.4231	0.8138
	0.3488	0.1542	1.9467	0.7273	0.3119	1.1593
PERCOLATION/LEAKAGE THROUGH LAYER 6						
TOTALS	0.0000	0.0001	0.0001	0.0001	0.0000	0.0000
	0.0000	0.0000	0.0000	0.0000	0.0000	0.0000
STD. DEVIATIONS	0.0000	0.0000	0.0000	0.0000	0.0000	0.0000
	0.0000	0.0000	0.0001	0.0000	0.0000	0.0000

AVERAGES OF MONTHLY AVERAGED DAILY HEADS (INCHES)

DAILY AVERAGE HEAD ON TOP OF LAYER 5

AVERAGES	0.0065	0.0107	0.0092	0.0076	0.0035	0.0035
	0.0015	0.0006	0.0039	0.0015	0.0010	0.0039
STD. DEVIATIONS	0.0046	0.0071	0.0063	0.0061	0.0024	0.0048
	0.0020	0.0009	0.0115	0.0041	0.0018	0.0066

AVERAGE ANNUAL TOTALS & (STD. DEVIATIONS) FOR YEARS 1 THROUGH 20

	INCHES		CU. FEET	PERCENT
PRECIPITATION	41.25	(8.104)	149735.7	100.00
RUNOFF	0.000	(0.0000)	0.00	0.000
EVAPOTRANSPIRATION	32.163	(3.6299)	116753.15	77.973
LATERAL DRAINAGE COLLECTED FROM LAYER 4	9.10874	(5.18516)	33064.723	22.08206
PERCOLATION/LEAKAGE THROUGH LAYER 6	0.00037	(0.00019)	1.360	0.00091
AVERAGE HEAD ON TOP OF LAYER 5	0.004	(0.003)		
CHANGE IN WATER STORAGE	-0.023	(1.9521)	-83.56	-0.056

678 gpmd

PEAK DAILY VALUES FOR YEARS 1 THROUGH 20

	(INCHES)	(CU. FT.)
PRECIPITATION	5.22	18948.600
RUNOFF	0.000	0.0000
DRAINAGE COLLECTED FROM LAYER 4	0.51536	1870.74683
PERCOLATION/LEAKAGE THROUGH LAYER 6	0.000017	0.06250
AVERAGE HEAD ON TOP OF LAYER 5	0.091	
MAXIMUM HEAD ON TOP OF LAYER 5	0.179	
LOCATION OF MAXIMUM HEAD IN LAYER 4 (DISTANCE FROM DRAIN)	3.5 FEET	
SNOW WATER	1.80	6547.7266

MAXIMUM VEG. SOIL WATER (VOL/VOL) 0.4806

MINIMUM VEG. SOIL WATER (VOL/VOL) 0.0844

*** Maximum heads are computed using McEnroe's equations. ***

Reference: Maximum Saturated Depth over Landfill Liner
by Bruce M. McEnroe, University of Kansas
ASCE Journal of Environmental Engineering
Vol. 119, No. 2, March 1993, pp. 262-270.

FINAL WATER STORAGE AT END OF YEAR 20

LAYER	(INCHES)	(VOL/VOL)
1	1.3805	0.2301
2	34.8402	0.2903
3	7.0430	0.2935
4	0.0166	0.0662
5	0.0000	0.0000
6	5.7000	0.4750
SNOW WATER	0.000	

HYDROLOGIC EVALUATION OF LANDFILL PERFORMANCE
HELP MODEL VERSION 3.07 (1 NOVEMBER 1997)
DEVELOPED BY ENVIRONMENTAL LABORATORY
USAE WATERWAYS EXPERIMENT STATION
FOR USEPA RISK REDUCTION ENGINEERING LABORATORY

PRECIPITATION DATA FILE: D:\PKSFIL~1\2ENGPR~1\HELP3\RALNCP.D4
TEMPERATURE DATA FILE: D:\PKSFIL~1\2ENGPR~1\HELP3\RALNCT.D7
SOLAR RADIATION DATA FILE: D:\PKSFIL~1\2ENGPR~1\HELP3\RALNCS.D13
EVAPOTRANSPIRATION DATA: D:\PKSFIL~1\2ENGPR~1\HELP3\RALNCE.D11
SOIL AND DESIGN DATA FILE: D:\PKSFIL~1\2ENGPR~1\HELP3\JCINTRM.D10
OUTPUT DATA FILE: D:\PKSFIL~1\2ENGPR~1\HELP3\JCINTRM.OUT

TIME: 18:21 DATE: 7/14/2005

TITLE: Johnston County C&DLF - Area 2 - Interim Condition

NOTE: INITIAL MOISTURE CONTENT OF THE LAYERS AND SNOW WATER WERE COMPUTED AS NEARLY STEADY-STATE VALUES BY THE PROGRAM.

LAYER 1

TYPE 1 - VERTICAL PERCOLATION LAYER
MATERIAL TEXTURE NUMBER 7

THICKNESS	=	12.00 INCHES
POROSITY	=	0.4730 VOL/VOL
FIELD CAPACITY	=	0.2220 VOL/VOL
WILTING POINT	=	0.1040 VOL/VOL
INITIAL SOIL WATER CONTENT	=	0.2268 VOL/VOL
EFFECTIVE SAT. HYD. COND.	=	0.520000001000E-03 CM/SEC

NOTE: SATURATED HYDRAULIC CONDUCTIVITY IS MULTIPLIED BY 3.00 FOR ROOT CHANNELS IN TOP HALF OF EVAPORATIVE ZONE.

LAYER 2

TYPE 1 - VERTICAL PERCOLATION LAYER
MATERIAL TEXTURE NUMBER 18

THICKNESS	=	480.00 INCHES
POROSITY	=	0.6710 VOL/VOL
FIELD CAPACITY	=	0.2920 VOL/VOL
WILTING POINT	=	0.0770 VOL/VOL
INITIAL SOIL WATER CONTENT	=	0.2960 VOL/VOL
EFFECTIVE SAT. HYD. COND.	=	0.100000005000E-02 CM/SEC

5/12

LAYER 3

TYPE 1 - VERTICAL PERCOLATION LAYER
MATERIAL TEXTURE NUMBER 7

THICKNESS	=	24.00 INCHES
POROSITY	=	0.4730 VOL/VOL
FIELD CAPACITY	=	0.2220 VOL/VOL
WILTING POINT	=	0.1040 VOL/VOL
INITIAL SOIL WATER CONTENT	=	0.2322 VOL/VOL
EFFECTIVE SAT. HYD. COND.	=	0.520000001000E-03 CM/SEC

LAYER 4

TYPE 2 - LATERAL DRAINAGE LAYER
MATERIAL TEXTURE NUMBER 20

THICKNESS	=	0.25 INCHES
POROSITY	=	0.8500 VOL/VOL
FIELD CAPACITY	=	0.0100 VOL/VOL
WILTING POINT	=	0.0050 VOL/VOL
INITIAL SOIL WATER CONTENT	=	0.0100 VOL/VOL
EFFECTIVE SAT. HYD. COND.	=	10.0000000000 CM/SEC
SLOPE	=	2.00 PERCENT
DRAINAGE LENGTH	=	200.0 FEET

LAYER 5

TYPE 4 - FLEXIBLE MEMBRANE LINER
MATERIAL TEXTURE NUMBER 36

THICKNESS	=	0.04 INCHES
POROSITY	=	0.0000 VOL/VOL
FIELD CAPACITY	=	0.0000 VOL/VOL
WILTING POINT	=	0.0000 VOL/VOL
INITIAL SOIL WATER CONTENT	=	0.0000 VOL/VOL
EFFECTIVE SAT. HYD. COND.	=	0.399999993000E-12 CM/SEC
FML PINHOLE DENSITY	=	1.00 HOLES/ACRE
FML INSTALLATION DEFECTS	=	8.00 HOLES/ACRE
FML PLACEMENT QUALITY	=	3 - GOOD

LAYER 6

TYPE 3 - BARRIER SOIL LINER
MATERIAL TEXTURE NUMBER 0

THICKNESS	=	12.00 INCHES
POROSITY	=	0.4750 VOL/VOL
FIELD CAPACITY	=	0.3780 VOL/VOL
WILTING POINT	=	0.2650 VOL/VOL
INITIAL SOIL WATER CONTENT	=	0.4750 VOL/VOL
EFFECTIVE SAT. HYD. COND.	=	0.999999975000E-05 CM/SEC

GENERAL DESIGN AND EVAPORATIVE ZONE DATA

NOTE: SCS RUNOFF CURVE NUMBER WAS COMPUTED FROM DEFAULT SOIL DATA BASE USING SOIL TEXTURE # 7 WITH BARE GROUND CONDITIONS, A SURFACE SLOPE OF 2.% AND A SLOPE LENGTH OF 300. FEET.

SCS RUNOFF CURVE NUMBER	=	88.20
FRACTION OF AREA ALLOWING RUNOFF	=	100.0 PERCENT
AREA PROJECTED ON HORIZONTAL PLANE	=	1.000 ACRES
EVAPORATIVE ZONE DEPTH	=	22.0 INCHES
INITIAL WATER IN EVAPORATIVE ZONE	=	5.658 INCHES
UPPER LIMIT OF EVAPORATIVE STORAGE	=	12.386 INCHES
LOWER LIMIT OF EVAPORATIVE STORAGE	=	2.018 INCHES
INITIAL SNOW WATER	=	0.000 INCHES
INITIAL WATER IN LAYER MATERIALS	=	156.096 INCHES
TOTAL INITIAL WATER	=	156.096 INCHES
TOTAL SUBSURFACE INFLOW	=	0.00 INCHES/YEAR

EVAPOTRANSPIRATION AND WEATHER DATA

NOTE: EVAPOTRANSPIRATION DATA WAS OBTAINED FROM RALEIGH NORTH CAROLINA

STATION LATITUDE	=	35.87 DEGREES
MAXIMUM LEAF AREA INDEX	=	2.00
START OF GROWING SEASON (JULIAN DATE)	=	86
END OF GROWING SEASON (JULIAN DATE)	=	310
EVAPORATIVE ZONE DEPTH	=	22.0 INCHES
AVERAGE ANNUAL WIND SPEED	=	7.70 MPH
AVERAGE 1ST QUARTER RELATIVE HUMIDITY	=	66.00 %
AVERAGE 2ND QUARTER RELATIVE HUMIDITY	=	70.00 %
AVERAGE 3RD QUARTER RELATIVE HUMIDITY	=	78.00 %
AVERAGE 4TH QUARTER RELATIVE HUMIDITY	=	72.00 %

NOTE: PRECIPITATION DATA WAS SYNTHETICALLY GENERATED USING COEFFICIENTS FOR RALEIGH NORTH CAROLINA

NORMAL MEAN MONTHLY PRECIPITATION (INCHES)

JAN/JUL	FEB/AUG	MAR/SEP	APR/OCT	MAY/NOV	JUN/DEC
3.55	3.43	3.69	2.91	3.67	3.66
4.38	4.44	3.29	2.73	2.87	3.14

NOTE: TEMPERATURE DATA WAS SYNTHETICALLY GENERATED USING COEFFICIENTS FOR RALEIGH NORTH CAROLINA

NORMAL MEAN MONTHLY TEMPERATURE (DEGREES FAHRENHEIT)

JAN/JUL	FEB/AUG	MAR/SEP	APR/OCT	MAY/NOV	JUN/DEC
39.60	41.60	49.30	59.50	67.20	73.90
77.70	77.00	71.00	59.70	50.00	42.00

NOTE: SOLAR RADIATION DATA WAS SYNTHETICALLY GENERATED USING COEFFICIENTS FOR RALEIGH NORTH CAROLINA AND STATION LATITUDE = 35.87 DEGREES

AVERAGE MONTHLY VALUES IN INCHES FOR YEARS 1 THROUGH 20

	JAN/JUL	FEB/AUG	MAR/SEP	APR/OCT	MAY/NOV	JUN/DEC
PRECIPITATION						
TOTALS	3.44	2.92	3.81	2.20	4.34	3.74
	4.24	5.43	2.40	2.87	3.05	2.80
STD. DEVIATIONS	2.07	1.23	1.51	1.52	2.22	1.98
	1.91	3.72	1.67	2.00	1.79	1.04
RUNOFF						
TOTALS	0.366	0.097	0.169	0.059	0.362	0.176
	0.189	0.554	0.158	0.175	0.244	0.131
STD. DEVIATIONS	0.485	0.116	0.194	0.127	0.554	0.217
	0.258	1.029	0.263	0.273	0.278	0.170
EVAPOTRANSPIRATION						
TOTALS	1.417	1.738	2.976	2.712	4.197	4.281
	3.999	4.060	2.504	1.295	1.173	1.035
STD. DEVIATIONS	0.162	0.246	0.306	0.935	0.784	1.545
	1.460	1.295	1.169	0.405	0.143	0.160
LATERAL DRAINAGE COLLECTED FROM LAYER 4						
TOTALS	0.7733	1.1764	1.3642	1.2311	0.9787	0.4166
	0.1999	0.0776	0.0861	0.3109	0.1611	0.4388
STD. DEVIATIONS	0.6343	0.5936	0.7360	0.7780	1.0281	0.3702
	0.2524	0.1192	0.1875	0.8946	0.4802	0.6571
PERCOLATION/LEAKAGE THROUGH LAYER 6						
TOTALS	0.0000	0.0000	0.0001	0.0001	0.0000	0.0000
	0.0000	0.0000	0.0000	0.0000	0.0000	0.0000
STD. DEVIATIONS	0.0000	0.0000	0.0000	0.0000	0.0000	0.0000
	0.0000	0.0000	0.0000	0.0000	0.0000	0.0000

6/12

AVERAGES OF MONTHLY AVERAGED DAILY HEADS (INCHES)

DAILY AVERAGE HEAD ON TOP OF LAYER 5

AVERAGES	0.0044	0.0073	0.0078	0.0072	0.0056	0.0025
	0.0011	0.0004	0.0005	0.0018	0.0009	0.0025
STD. DEVIATIONS	0.0036	0.0037	0.0042	0.0046	0.0059	0.0022
	0.0014	0.0007	0.0011	0.0051	0.0028	0.0037

AVERAGE ANNUAL TOTALS & (STD. DEVIATIONS) FOR YEARS 1 THROUGH 20

	INCHES		CU. FEET	PERCENT
PRECIPITATION	41.25	(8.104)	149735.7	100.00
RUNOFF	2.680	(1.8280)	9729.88	6.498
EVAPOTRANSPIRATION	31.386	(3.7355)	113932.33	76.089
LATERAL DRAINAGE COLLECTED FROM LAYER 4	7.21475	(3.58314)	26189.551	17.49052
PERCOLATION/LEAKAGE THROUGH LAYER 6	0.00031	(0.00014)	1.109	0.00074
AVERAGE HEAD ON TOP OF LAYER 5	0.004	(0.002)		
CHANGE IN WATER STORAGE	-0.032	(2.2283)	-117.18	-0.078

537 spad

PEAK DAILY VALUES FOR YEARS 1 THROUGH 20

	(INCHES)	(CU. FT.)
PRECIPITATION	5.22	18948.600
RUNOFF	2.948	10701.5029
DRAINAGE COLLECTED FROM LAYER 4	0.18915	686.61426
PERCOLATION/LEAKAGE THROUGH LAYER 6	0.000007	0.02534
AVERAGE HEAD ON TOP OF LAYER 5	0.033	
MAXIMUM HEAD ON TOP OF LAYER 5	0.066	
LOCATION OF MAXIMUM HEAD IN LAYER 4 (DISTANCE FROM DRAIN)	1.0 FEET	
SNOW WATER	1.80	6547.7266

MAXIMUM VEG. SOIL WATER (VOL/VOL) 0.3608

MINIMUM VEG. SOIL WATER (VOL/VOL) 0.0917

*** Maximum heads are computed using McEnroe's equations. ***

Reference: Maximum Saturated Depth over Landfill Liner
by Bruce M. McEnroe, University of Kansas
ASCE Journal of Environmental Engineering
Vol. 119, No. 2, March 1993, pp. 262-270.

FINAL WATER STORAGE AT END OF YEAR 20

LAYER	(INCHES)	(VOL/VOL)
1	2.6406	0.2200
2	140.6111	0.2929
3	6.4959	0.2707
4	0.0025	0.0100
5	0.0000	0.0000
6	5.7000	0.4750
SNOW WATER	0.000	

HYDROLOGIC EVALUATION OF LANDFILL PERFORMANCE
HELP MODEL VERSION 3.07 (1 NOVEMBER 1997)
DEVELOPED BY ENVIRONMENTAL LABORATORY
USAE WATERWAYS EXPERIMENT STATION
FOR USEPA RISK REDUCTION ENGINEERING LABORATORY

PRECIPITATION DATA FILE: D:\PKSFIL~1\2ENGPR~1\HELP3\RALNCP.D4
TEMPERATURE DATA FILE: D:\PKSFIL~1\2ENGPR~1\HELP3\RALNCT.D7
SOLAR RADIATION DATA FILE: D:\PKSFIL~1\2ENGPR~1\HELP3\RALNCS.D13
EVAPOTRANSPIRATION DATA: D:\PKSFIL~1\2ENGPR~1\HELP3\RALNCE.D11
SOIL AND DESIGN DATA FILE: D:\PKSFIL~1\2ENGPR~1\HELP3\JCFINAL.D10
OUTPUT DATA FILE: D:\PKSFIL~1\2ENGPR~1\HELP3\JCFINAL.OUT

TIME: 18:21 DATE: 7/14/2005

TITLE: Johnston County C&DLF - Area 2 - Final Cover Condition

NOTE: INITIAL MOISTURE CONTENT OF THE LAYERS AND SNOW WATER WERE COMPUTED AS NEARLY STEADY-STATE VALUES BY THE PROGRAM.

LAYER 1

TYPE 1 - VERTICAL PERCOLATION LAYER
MATERIAL TEXTURE NUMBER 7

THICKNESS	=	24.00 INCHES
POROSITY	=	0.4730 VOL/VOL
FIELD CAPACITY	=	0.2220 VOL/VOL
WILTING POINT	=	0.1040 VOL/VOL
INITIAL SOIL WATER CONTENT	=	0.2318 VOL/VOL
EFFECTIVE SAT. HYD. COND.	=	0.520000001000E-03 CM/SEC

NOTE: SATURATED HYDRAULIC CONDUCTIVITY IS MULTIPLIED BY 3.00 FOR ROOT CHANNELS IN TOP HALF OF EVAPORATIVE ZONE.

LAYER 2

TYPE 2 - LATERAL DRAINAGE LAYER
MATERIAL TEXTURE NUMBER 20

THICKNESS	=	0.25 INCHES
POROSITY	=	0.8500 VOL/VOL
FIELD CAPACITY	=	0.0100 VOL/VOL
WILTING POINT	=	0.0050 VOL/VOL
INITIAL SOIL WATER CONTENT	=	0.0121 VOL/VOL
EFFECTIVE SAT. HYD. COND.	=	10.0000000000 CM/SEC
SLOPE	=	25.00 PERCENT
DRAINAGE LENGTH	=	150.0 FEET

LAYER 3

TYPE 4 - FLEXIBLE MEMBRANE LINER
MATERIAL TEXTURE NUMBER 36

THICKNESS	=	0.03 INCHES
POROSITY	=	0.0000 VOL/VOL
FIELD CAPACITY	=	0.0000 VOL/VOL
WILTING POINT	=	0.0000 VOL/VOL
INITIAL SOIL WATER CONTENT	=	0.0000 VOL/VOL
EFFECTIVE SAT. HYD. COND.	=	0.399999993000E-12 CM/SEC
FML PINHOLE DENSITY	=	1.00 HOLES/ACRE
FML INSTALLATION DEFECTS	=	8.00 HOLES/ACRE
FML PLACEMENT QUALITY	=	3 - GOOD

LAYER 4

TYPE 1 - VERTICAL PERCOLATION LAYER
MATERIAL TEXTURE NUMBER 7

THICKNESS	=	12.00 INCHES
POROSITY	=	0.4730 VOL/VOL
FIELD CAPACITY	=	0.2220 VOL/VOL
WILTING POINT	=	0.1040 VOL/VOL
INITIAL SOIL WATER CONTENT	=	0.2220 VOL/VOL
EFFECTIVE SAT. HYD. COND.	=	0.520000001000E-03 CM/SEC

LAYER 5

TYPE 1 - VERTICAL PERCOLATION LAYER
MATERIAL TEXTURE NUMBER 18

THICKNESS	=	480.00 INCHES
POROSITY	=	0.6710 VOL/VOL
FIELD CAPACITY	=	0.2920 VOL/VOL
WILTING POINT	=	0.0770 VOL/VOL
INITIAL SOIL WATER CONTENT	=	0.2920 VOL/VOL
EFFECTIVE SAT. HYD. COND.	=	0.100000005000E-02 CM/SEC

LAYER 6

TYPE 1 - VERTICAL PERCOLATION LAYER
MATERIAL TEXTURE NUMBER 7

THICKNESS	=	24.00 INCHES
POROSITY	=	0.4730 VOL/VOL
FIELD CAPACITY	=	0.2220 VOL/VOL
WILTING POINT	=	0.1040 VOL/VOL
INITIAL SOIL WATER CONTENT	=	0.2220 VOL/VOL
EFFECTIVE SAT. HYD. COND.	=	0.520000001000E-03 CM/SEC

LAYER 7

TYPE 2 - LATERAL DRAINAGE LAYER
MATERIAL TEXTURE NUMBER 20

THICKNESS	=	0.25 INCHES
POROSITY	=	0.8500 VOL/VOL
FIELD CAPACITY	=	0.0100 VOL/VOL
WILTING POINT	=	0.0050 VOL/VOL
INITIAL SOIL WATER CONTENT	=	0.0100 VOL/VOL
EFFECTIVE SAT. HYD. COND.	=	10.0000000000 CM/SEC
SLOPE	=	2.00 PERCENT
DRAINAGE LENGTH	=	200.0 FEET

LAYER 8

TYPE 4 - FLEXIBLE MEMBRANE LINER
MATERIAL TEXTURE NUMBER 36

THICKNESS	=	0.04 INCHES
POROSITY	=	0.0000 VOL/VOL
FIELD CAPACITY	=	0.0000 VOL/VOL
WILTING POINT	=	0.0000 VOL/VOL
INITIAL SOIL WATER CONTENT	=	0.0000 VOL/VOL
EFFECTIVE SAT. HYD. COND.	=	0.399999993000E-12 CM/SEC
FML PINHOLE DENSITY	=	1.00 HOLES/ACRE
FML INSTALLATION DEFECTS	=	8.00 HOLES/ACRE
FML PLACEMENT QUALITY	=	3 - GOOD

LAYER 9

TYPE 3 - BARRIER SOIL LINER
MATERIAL TEXTURE NUMBER 0

THICKNESS	=	12.00 INCHES
POROSITY	=	0.4750 VOL/VOL
FIELD CAPACITY	=	0.3780 VOL/VOL
WILTING POINT	=	0.2650 VOL/VOL
INITIAL SOIL WATER CONTENT	=	0.4750 VOL/VOL
EFFECTIVE SAT. HYD. COND.	=	0.999999975000E-05 CM/SEC

GENERAL DESIGN AND EVAPORATIVE ZONE DATA

NOTE: SCS RUNOFF CURVE NUMBER WAS COMPUTED FROM DEFAULT SOIL DATA BASE USING SOIL TEXTURE # 7 WITH BARE GROUND CONDITIONS, A SURFACE SLOPE OF 2.% AND A SLOPE LENGTH OF 300. FEET.

SCS RUNOFF CURVE NUMBER	=	88.20
FRACTION OF AREA ALLOWING RUNOFF	=	100.0 PERCENT
AREA PROJECTED ON HORIZONTAL PLANE	=	1.000 ACRES
EVAPORATIVE ZONE DEPTH	=	22.0 INCHES
INITIAL WATER IN EVAPORATIVE ZONE	=	4.985 INCHES
UPPER LIMIT OF EVAPORATIVE STORAGE	=	10.406 INCHES
LOWER LIMIT OF EVAPORATIVE STORAGE	=	2.288 INCHES
INITIAL SNOW WATER	=	0.000 INCHES
INITIAL WATER IN LAYER MATERIALS	=	159.421 INCHES
TOTAL INITIAL WATER	=	159.421 INCHES
TOTAL SUBSURFACE INFLOW	=	0.00 INCHES/YEAR

EVAPOTRANSPIRATION AND WEATHER DATA

NOTE: EVAPOTRANSPIRATION DATA WAS OBTAINED FROM RALEIGH NORTH CAROLINA

STATION LATITUDE	=	35.87 DEGREES
MAXIMUM LEAF AREA INDEX	=	2.00
START OF GROWING SEASON (JULIAN DATE)	=	86
END OF GROWING SEASON (JULIAN DATE)	=	310
EVAPORATIVE ZONE DEPTH	=	22.0 INCHES
AVERAGE ANNUAL WIND SPEED	=	7.70 MPH
AVERAGE 1ST QUARTER RELATIVE HUMIDITY	=	66.00 %
AVERAGE 2ND QUARTER RELATIVE HUMIDITY	=	70.00 %
AVERAGE 3RD QUARTER RELATIVE HUMIDITY	=	78.00 %
AVERAGE 4TH QUARTER RELATIVE HUMIDITY	=	72.00 %

NOTE: PRECIPITATION DATA WAS SYNTHETICALLY GENERATED USING COEFFICIENTS FOR RALEIGH NORTH CAROLINA

NORMAL MEAN MONTHLY PRECIPITATION (INCHES)

JAN/JUL	FEB/AUG	MAR/SEP	APR/OCT	MAY/NOV	JUN/DEC
3.55	3.43	3.69	2.91	3.67	3.66
4.38	4.44	3.29	2.73	2.87	3.14

NOTE: TEMPERATURE DATA WAS SYNTHETICALLY GENERATED USING COEFFICIENTS FOR RALEIGH NORTH CAROLINA

NORMAL MEAN MONTHLY TEMPERATURE (DEGREES FAHRENHEIT)

JAN/JUL	FEB/AUG	MAR/SEP	APR/OCT	MAY/NOV	JUN/DEC
39.60	41.60	49.30	59.50	67.20	73.90
77.70	77.00	71.00	59.70	50.00	42.00

NOTE: SOLAR RADIATION DATA WAS SYNTHETICALLY GENERATED USING COEFFICIENTS FOR RALEIGH NORTH CAROLINA AND STATION LATITUDE = 35.87 DEGREES

8/12

AVERAGE MONTHLY VALUES IN INCHES FOR YEARS 1 THROUGH 20

	JAN/JUL	FEB/AUG	MAR/SEP	APR/OCT	MAY/NOV	JUN/DEC
PRECIPITATION						
TOTALS	3.44	2.92	3.81	2.20	4.34	3.74
	4.24	5.43	2.40	2.87	3.05	2.80
STD. DEVIATIONS	2.07	1.23	1.51	1.52	2.22	1.98
	1.91	3.72	1.67	2.00	1.79	1.04
RUNOFF						
TOTALS	0.385	0.105	0.182	0.064	0.373	0.181
	0.194	0.575	0.167	0.178	0.250	0.136
STD. DEVIATIONS	0.509	0.121	0.209	0.139	0.575	0.224
	0.266	1.068	0.293	0.281	0.284	0.173
EVAPOTRANSPIRATION						
TOTALS	1.405	1.729	2.912	2.729	3.990	3.628
	3.650	3.757	2.313	1.287	1.195	1.038
STD. DEVIATIONS	0.210	0.287	0.354	0.939	0.916	1.571
	1.366	1.279	1.102	0.406	0.198	0.137
LATERAL DRAINAGE COLLECTED FROM LAYER 2						
TOTALS	1.5498	1.2165	1.1222	0.4777	0.3354	0.3309
	0.3306	0.7587	0.3953	0.2594	0.9335	1.1060
STD. DEVIATIONS	1.0681	0.8922	0.8515	0.4884	0.5255	0.2506
	0.2739	0.9669	0.6473	0.4436	0.9249	0.6307
PERCOLATION/LEAKAGE THROUGH LAYER 3						
TOTALS	0.0002	0.0002	0.0002	0.0001	0.0001	0.0001
	0.0001	0.0001	0.0001	0.0000	0.0002	0.0002
STD. DEVIATIONS	0.0001	0.0001	0.0001	0.0001	0.0001	0.0000
	0.0000	0.0001	0.0001	0.0001	0.0001	0.0001
LATERAL DRAINAGE COLLECTED FROM LAYER 7						
TOTALS	0.0002	0.0002	0.0002	0.0001	0.0001	0.0001
	0.0001	0.0001	0.0001	0.0000	0.0001	0.0002
STD. DEVIATIONS	0.0001	0.0001	0.0001	0.0001	0.0001	0.0000
	0.0000	0.0001	0.0001	0.0001	0.0001	0.0001
PERCOLATION/LEAKAGE THROUGH LAYER 9						
TOTALS	0.0000	0.0000	0.0000	0.0000	0.0000	0.0000
	0.0000	0.0000	0.0000	0.0000	0.0000	0.0000
STD. DEVIATIONS	0.0000	0.0000	0.0000	0.0000	0.0000	0.0000
	0.0000	0.0000	0.0000	0.0000	0.0000	0.0000

AVERAGES OF MONTHLY AVERAGED DAILY HEADS (INCHES)

DAILY AVERAGE HEAD ON TOP OF LAYER 3						
AVERAGES	0.0006	0.0005	0.0004	0.0002	0.0001	0.0001
	0.0001	0.0003	0.0001	0.0001	0.0003	0.0004
STD. DEVIATIONS	0.0004	0.0004	0.0003	0.0002	0.0002	0.0001
	0.0001	0.0004	0.0002	0.0002	0.0003	0.0002
DAILY AVERAGE HEAD ON TOP OF LAYER 8						
AVERAGES	0.0000	0.0000	0.0000	0.0000	0.0000	0.0000
	0.0000	0.0000	0.0000	0.0000	0.0000	0.0000
STD. DEVIATIONS	0.0000	0.0000	0.0000	0.0000	0.0000	0.0000
	0.0000	0.0000	0.0000	0.0000	0.0000	0.0000

AVERAGE ANNUAL TOTALS & (STD. DEVIATIONS) FOR YEARS 1 THROUGH 20

	INCHES		CU. FEET	PERCENT
PRECIPITATION	41.25	(8.104)	149735.7	100.00
RUNOFF	2.790	(1.9297)	10129.09	6.765
EVAPOTRANSPIRATION	29.632	(3.6903)	107565.02	71.837
LATERAL DRAINAGE COLLECTED FROM LAYER 2	8.81614	(3.81136)	32002.582	21.37271
PERCOLATION/LEAKAGE THROUGH LAYER 3	0.00144	(0.00048)	5.224	0.00349
AVERAGE HEAD ON TOP OF LAYER 3	0.000	(0.000)		
LATERAL DRAINAGE COLLECTED FROM LAYER 7	0.00144	(0.00048)	5.212	0.00348
PERCOLATION/LEAKAGE THROUGH	0.00000	(0.00000)	0.012	0.00001

0.11 gpad

LAYER 9

AVERAGE HEAD ON TOP OF LAYER 8	0.000	(0.000)		
CHANGE IN WATER STORAGE	0.009	(1.1053)	33.78	0.023

PEAK DAILY VALUES FOR YEARS 1 THROUGH 20

	(INCHES)	(CU. FT.)
PRECIPITATION	5.22	18948.600
RUNOFF	2.955	10724.8623
DRAINAGE COLLECTED FROM LAYER 2	1.02055	3704.58569
PERCOLATION/LEAKAGE THROUGH LAYER 3	0.000085	0.30740
AVERAGE HEAD ON TOP OF LAYER 3	0.011	
MAXIMUM HEAD ON TOP OF LAYER 3	0.059	
LOCATION OF MAXIMUM HEAD IN LAYER 2 (DISTANCE FROM DRAIN)	0.0 FEET	
DRAINAGE COLLECTED FROM LAYER 7	0.00008	0.28166
PERCOLATION/LEAKAGE THROUGH LAYER 9	0.000000	0.00007
AVERAGE HEAD ON TOP OF LAYER 8	0.000	
MAXIMUM HEAD ON TOP OF LAYER 8	0.000	
LOCATION OF MAXIMUM HEAD IN LAYER 7 (DISTANCE FROM DRAIN)	0.0 FEET	
SNOW WATER	1.80	6547.7266

MAXIMUM VEG. SOIL WATER (VOL/VOL) 0.3536

MINIMUM VEG. SOIL WATER (VOL/VOL) 0.1040

*** Maximum heads are computed using McEnroe's equations. ***

Reference: Maximum Saturated Depth over Landfill Liner
by Bruce M. McEnroe, University of Kansas
ASCE Journal of Environmental Engineering
Vol. 119, No. 2, March 1993, pp. 262-270.

FINAL WATER STORAGE AT END OF YEAR 20

LAYER	(INCHES)	(VOL/VOL)
1	5.7499	0.2396
2	0.0027	0.0110
3	0.0000	0.0000
4	2.6640	0.2220
5	140.1600	0.2920
6	5.3280	0.2220
7	0.0025	0.0100
8	0.0000	0.0000
9	5.7000	0.4750
SNOW WATER	0.000	

G.N. Richardson & Associates
Engineering and Geological Services
14 N. Boylan Avenue
Raleigh, NC 27603
Tel: 919-828-0577
Fax: 919-828-3899

SHEET: 9/12
JOB #: JOHNSTON-22
DATE: 10/6/05
BY: PKS
CHKD BY:

Johnston County C&D Landfill - Area 2
Evaluation of Leachate Generation Rates

LEACHATE GENERATION RATES:

1 Year, 24 Hour Design Storm Depth = 3.20 inches **(US Weather Bureau TP-40)**

Open: 86,888 gallons/acre/day
Active: 1,200 gallons/acre/day
Interim: 500 gallons/acre/day
Final: 100 gallons/acre/day

OPEN		ACTIVE		INTERIM		FINAL		TOTAL
Acres	GPD	Acres	GPD	Acres	GPD	Acres	GPD	GPD
A. Initial Filling of Area 2 (Maximum Value is "Surge" Event) (Phases 4A & Phase 5 under Interim Conditions)								
2.0	173,775	0.0	0	48.6	24,300	0.0	0	198,075
2.0	173,775	2.0	2,400	48.6	24,300	0.0	0	200,475
2.0	173,775	4.0	4,800	48.6	24,300	0.0	0	202,875
2.0	173,775	6.0	7,200	48.6	24,300	0.0	0	205,275
2.0	173,775	8.0	9,600	48.6	24,300	0.0	0	207,675
3.0	260,663	12.8	15,360	48.6	24,300	0.0	0	300,323
B. Waste Covers Area 2 (Value is "Typical" for Area 2)								
0.0	0	15.8	18,960	48.6	24,300	0.0	0	43,260
C. Completion of Area 2 Operations								
0.0	0	0.0	0	64.4	32,200	0.0	0	32,200
D. Closure of Phase 4A, Phase 5, & Area 2 (Value is "Typical" for Post-Closure Conditions)								
0.0	0	0.0	0	0.0	0	64.4	6,440	6,440

SHEET:	10 / 12
JOB #:	JOHNSTON-22
DATE:	10/6/05
BY:	PKS
CHKD BY:	

REQUIRED REMOVAL RATES:

Case 1: Surge Event:

Quantity of Leachate Produced = 300,323 gallons **(See Above)**
Maximum Storage Capacity = 4,300,000 gallons **(See Below)**

Before Surge Event		After Surge Event		Maximum Detention Time In in Landfill (days)	
Available Storage Capacity (gallons)	Volume Retained in Lagoon (gallons)	Volume Retained in Lagoon (gallons)	Volume Retained in Landfill (gallons)	Pump Rate = 15,000 gpd	Pump Rate = 30,000 gpd
2,000,000	2,300,000	2,600,323	0	0.0	0.0
1,800,000	2,500,000	2,800,323	0	0.0	0.0
1,600,000	2,700,000	3,000,323	0	0.0	0.0
1,400,000	2,900,000	3,200,323	0	0.0	0.0
1,200,000	3,100,000	3,400,323	0	0.0	0.0
1,000,000	3,300,000	3,600,323	0	0.0	0.0
800,000	3,500,000	3,800,323	0	0.0	0.0
600,000	3,700,000	4,000,323	0	0.0	0.0
400,000	3,900,000	4,200,323	0	0.0	0.0
200,000	4,100,000	4,300,000	100,323	6.7	3.3
100,000	4,200,000	4,300,000	200,323	13.4	6.7
0	4,300,000	4,300,000	300,323	20.0	10.0

Case 2: Typical Phase 3 Leachate Generation:

Typical Leachate Generation Rate = 43,260 gallons/day **(See Above)**

Days of Storage Capacity = 99.4 days

Case 3: Typical Post-Closure Leachate Generation:

Typical Leachate Generation Rate = 6,440 gallons/day **(See Above)**

Days of Storage Capacity = 667.7 days

STORAGE CAPACITY OF LEACHATE LAGOON:

Capacity = 4,300,000 gallons **(With 2 Feet of Freeboard)**
(See Attached)

G.N. Richardson & Associates
Engineering and Geological Services
14 N. Boylan Avenue
Raleigh, NC 27603
Tel: 919-828-0577
Fax: 919-828-3899

SHEET: 11 / 12
JOB #: JOHNSTON-22
DATE: 9/9/05
BY: PKS
CHKD BY:

Johnston County C&D Landfill - Area 2
Volume of Leachate Storage Lagoon

STORAGE CAPACITY OF LEACHATE STORAGE LAGOON:

Contour	Area (SF)	Incr Vol (CF)	Accum Vol (CF)	Accum Vol (Gallons)	Stage (FT)
146.5	13,725		0	0	0
148.5	71,675	85,400	85,400	638,792	2
150.5	78,450	150,125	235,525	1,761,727	4
152.5	85,075	163,525	399,050	2,984,894	6
154.5	91,925	177,000	576,050	4,308,854	8
156.5	97,988	189,913	765,963	5,729,403	10

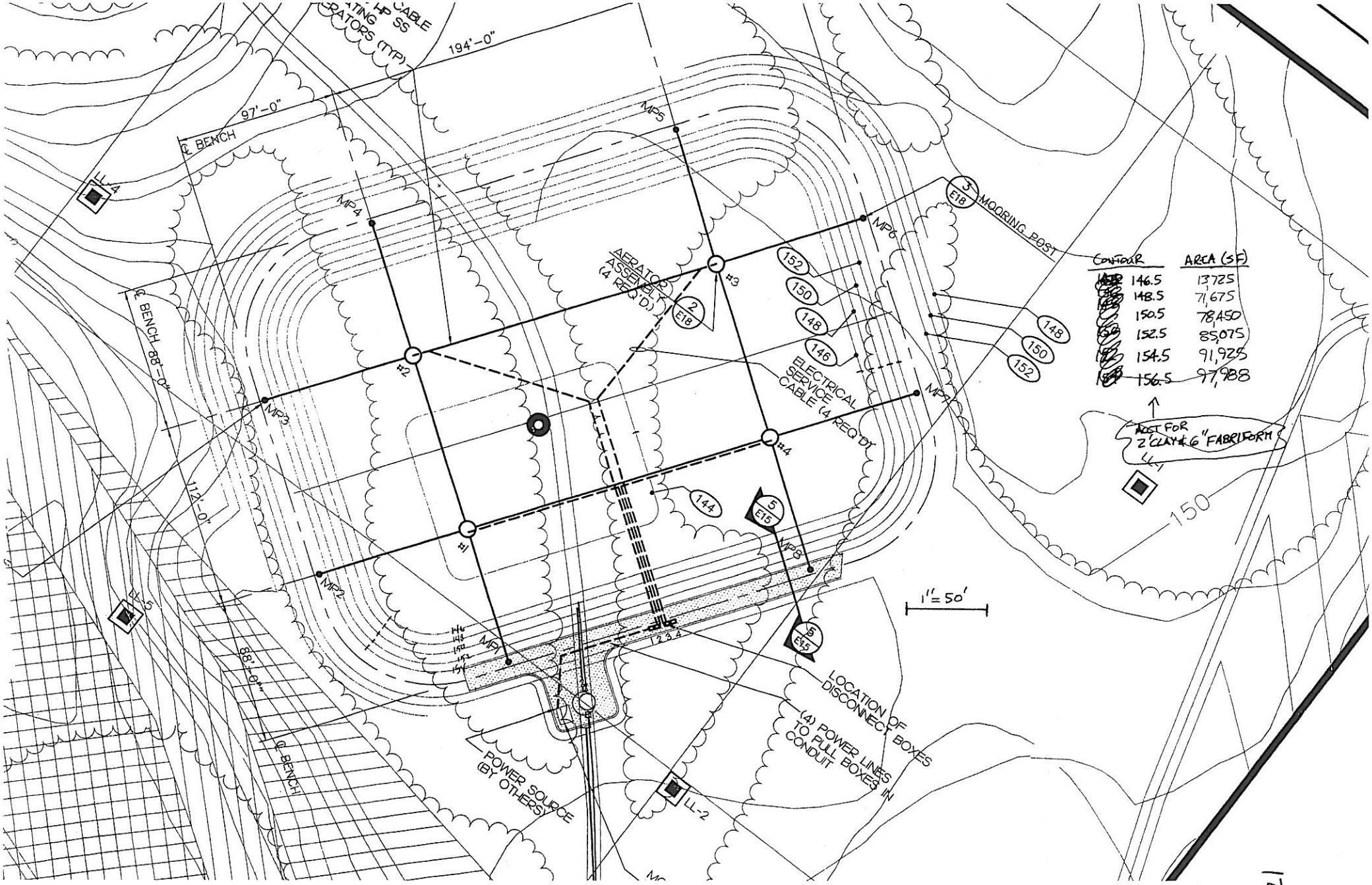
194'-0"
97'-0"
℄ BENCH
℄ BENCH 88'-0"
112'-0"
88'-0"
℄ BENCH
MP1
MP2
MP3
MP4
MP5
MP6
MP7
MP8
#1
#2
#3
#4
AERATOR ASSEMBLY (4 REQ'D)
ELECTRICAL SERVICE CABLE (4 REQ'D)
MOORING POST
LOCATION OF DISCONNECT BOXES
(4) POWER LINES TO PULL BOXES IN CONDUIT
POWER SOURCE (BY OTHERS)
LL-1
LL-2
LL-3
LL-4
1" = 50'
146
148
150
152
144
150
CONTOUR
AREA (SF)
146.5
13,725
148.5
71,675
150.5
78,450
152.5
85,075
154.5
91,925
156.5
97,988
ADJ FOR 2' CLAY & 6" FABRIFORM

12/12

G.N. Richardson & Associates, Inc.
ENGINEERING AND GEOLOGICAL SERVICES

DATE 18-Oct-05
BY SAS
JOB NO. JOHNSTON-21

√ PKS

Leachate Management
Johnston County C&D Landfill
Leachate Pumping System Design

Objective: Determine pumping system parameters for the proposed leachate collection system.

Given:

1. Cell Area:	15.8	AC	------>	Ref. 1
2. Normal Flow Conditions:	20,000	GPD	------>	Leachate Generation Calculations
3. Peak Flow Conditions:	150,000	GPD	------>	Leachate Generation Calculations (Assume use of GRC)
4. Minimum Flow Velocity:	2	fps	------>	Ref. 3 (for "Self Cleaning")
5. Maximum Flow Velocity:	5	fps	------>	Ref. 3 (for "Water Hammer" Reduction)

Reference:

1. Johnston County C&D Landfill Area 2 Permit Drawings
2. Driscopipe Design Manual
3. "Pumping Station Design", 2nd Edition, Robert L. Sanks, Editor in Chief, 1998, by Butterworth Heineman.
4. "Elements of Urban Stormwater Design", H. Rooney Malcom, NCSU

Calculations: The pumps will be designed for critical elements as follows:

* Piping Requirements
* Pump Requirements
* System Cycle Time
* Riser Fit
* System Surge Pressures

1. *Piping Requirements*

-------> Determine Nominal Pumping Rate

<u>The Nominal Pumping Rate is the greater of 2.5 times normal conditions or equal to peak conditions.</u>

Therefore, @ Normal Conditions, Qreq = 35GPM and @ Peak Conditions, Qreq = 104GPM

Nominal Pumping Rate: 100 **GPM**

-------> Determine Typical Pipe Size:

<u>Pipes are sized to keep flow velocities within GIVEN ranges to insure turbulent flow.</u>

Use the Continuity Equation for incompressible steady flow to determine flow velocity, Q = V*A

Where: Q = Flowrate (cfs)
V = Velocity (fps)
A = Area (square feet)

Standard Pipe Diameter (I.D.) =	3.088	inches	------>	SDR =	17
Nominal Pumping Rate, Q =	0.223	cfs			
Area, A =	0.052	square feet			
Velocity, V =	4.28	fps	------> OK!		

Therefore, Use 3 Inch - SDR 17 Pipe

2. *Pump Requirements*

<u>Flow is desired in fully turbulent conditions. The Reynolds, R, number is used to verify this condition as follows:</u>

Reynolds Number, $R_e = V*D / \upsilon$

Where: V = velocity, fps
D = pipe inside diameter, inches
υ = kinematic viscosity, square feet per second

Velocity, V =	4.28	fps		
Pipe Inside Diameter (I.D.) =	3.09	inches		
kinematic viscosity, υ =	5.58E-06	square feet per second	----->	App. A, Table A-9 @ 130 degrees - Ref. 3

Reynolds Number, Re = 197,573 > 10,000 OK -----> Turbulent flow conditions exist

Pumps will be sized according to balance energy by the Bernoulli equation. The equation has been modified as follows:

$TDH = H_e + H_f + H_m$

Where: TDH = Total Dynamic Head, feet
H_e = Elevation Head, feet
H_f = Friction Head, feet
H_m = Minor Losses, feet

Calculations for these values are continued on a spreadsheet model of the system. Please refer to Table 1 (attached).

G.N. Richardson & Associates, Inc.
ENGINEERING AND GEOLOGICAL SERVICES

DATE 19-Oct-05
BY SAS
JOB NO JOHNSTON-21

Leachate Management
Johnston County C&D Landfill
Leachate Pumping System Design

3. System Cycle Time

-------> ~~Determine available storage if a wet well:~~

~~Bottom Elevation of Well =~~	~~162~~	~~FT~~	~~-------> Ref. 1~~
~~Diameter of Well =~~	~~5~~	~~FT~~	~~-------> Ref. 1~~
~~Top Elevation of Well =~~	~~172~~	~~FT~~	~~-------> Ref. 1~~
~~Total Volume of Well =~~	~~196~~	~~CF~~	
~~Total Volume of Well =~~	~~1,469~~	~~GAL~~	
~~Pump ON Elevation =~~	~~168~~	~~FT~~	
~~Pump OFF Elevation =~~	~~165~~	~~FT~~	
~~Pump ON to OFF Volume =~~	~~441~~	~~GAL~~	

-------> Determine available storage if a sideslope riser.

Storage volume is calculated according to the Average End Area Method. Assumes 3:1 Sideslopes.

Contour Elevation	Length (feet)	Width (feet)	Area (square feet)	Volume* (cubic feet)	Storage, S (cubic feet)	Storage, S (gallons)	Stage Z
0.0	16.0	16.0	256		0	0	0.0
0.5	19.0	19.0	361	154	154	1154	0.5
1.0	22.0	22.0	484	211	366	2734	1.0
1.5	25.0	25.0	625	277	643	4808	1.5
2.0	28.0	28.0	784	352	995	7443	2.0

Note:
* Calculated according to Average End Area Method

Available Volume =	841	cubic feet	*6289*	*gallons*
Minimum liquid elevation =	0.50	feet above bottom		

The sump is filled with No. 57 Stone therefore volume is reduced. The assumed porosity of the stone is 30%.

If pumps cycle through one (1) foot of elevation volume is 7,443 GAL - 1,154 GAL = 6,289 GALLONS
@ 30% porsity -------> Available Volume = 1887 GALLONS

-------> Determine Cycle Time

The pumps should not operate more than 9 times per hour. Minimum cycle time will be determined by the equation below: -------> Sanks, Ref. 3

$t = V/(Q-S) + V/S$ where:
t = Cycle time (min)
V = Volume of Liquid (gallons)
Q = Pumping rate (GPM)
S = Inflow (GPM)

Therefore, V =	1887	GAL ----> from above
Q =	100	GPM ------> Nominal Pumping Rate
S =	14	GPM ------> Normal Flow Conditions
t =	158	minutes

Pump will start once every 3 hours

Pump drawdown time will be 22 minutes

4. Riser Fit

-------> Determine minimum dimensions of sideslope riser pipe to allow pump to fit and manage turn at the bottom of the slope

At half of the pump length (L/2), the pump will equally straddle the turn in the pipe and will be at its closest point to the upper edge of the interior of the pipe riser. This value will be compared with the available space with a Factor of Safety of 10% for pipe irregularities.

Pipe Dimensions:

Riser Slope:	3	H to 1 V
Riser Pipe I.D. =	15.882	inches -----> AVAILABLE

Pump Dimensions:

Pump Length, L =	55	inches ----->	*Leachator LPS150MSTG12075-04*
Total Width	6.5	inches ----->	
Clearance =	4.92	inches	

Riser Fit ? **OK ---> USE 18 inch HDPE SDR 17 PIPE**

Standard Pipe Sizes:

Inside* Diameter (inches)	Standard Design Ratio (SDR)	Nominal Pipe Size (inches)
10.432	11	12
11.250	17	12
14.728	11	18
15.882	17	18
19.636	11	24
21.176	17	24

* Ref. 2

G.N. Richardson & Associates, Inc.
ENGINEERING AND GEOLOGICAL SERVICES

DATE: 18-Oct-05
BY: SAS
JOB NO: JOHNSTON-21

Leachate Management
Johnston County C&D Landfill
Leachate Pumping System Design

5. *System Surge Pressures*

--------> Determine if pipe is sufficient strength to withstand system surges.

System surge pressure is determined by the equation:

$\Delta P = (a/g)*(\Delta v/2.31)$ -------->Ref. 3, pg. 143.

Where: ΔP = Pressure (psi)
a = Pressure wave velocity (fps)
Δv = Change in velocity (fps)
g = acceleration of gravity (32.1 ft/sec^2)

and

$a = 4822/(1+k/E*(D/t)*C_2)^{0.5}$ -------->Ref. 3, pg. 144.

Where: k = Bulk modulus of water (psi)
E = Pipe modulus of elasticity (psi)
D = Internal diameter of pipe (inches)
t = Pipe wall thickness (inches)
C_2 = Constant dependent upon pipe constraints
μ = poisson's ratio, use 0.45 for HDPE pipe (buried), Table 6-1, Ref. 2

k =	296,000	psi ------>	App. A, Table A-9 @ 40°F - Ref. 3	Conservative Case
E =	100,000	psi ------>	HDPE , Ref. 2	
Δv =	5	fps ------>	Maximum allowable velocity	
μ =	0.45			
C_2 =	0.80			
FS =	1.5	Minimum Allowable		

P(allowable) Ref. 2 (psi)	Standard Design Ratio (SDR)	Nominal Pipe Size (inches)	Outside Diameter (inches)	Inside Diameter (inches)	Pipe Wall Thickness (inches)	Pressure Wave Velocity (fps)	Pressure (psi)	Factor of Safety	Comment
267	7	2	2.375	1.697	0.339	1347	91	2.94	OKAY
200	9	2	2.375	1.847	0.264	1152	78	2.57	OKAY
160	11	2	2.375	1.943	0.216	1023	69	2.32	OKAY
128	13.5	2	2.375	2.023	0.176	909	61	2.09	OKAY
110	15.5	2	2.375	2.069	0.153	840	57	1.94	OKAY
100	17	2	2.375	2.095	0.140	800	54	1.85	OKAY
267	7	3	3.500	2.500	0.500	1348	91	2.94	OKAY
200	9	3	3.500	2.722	0.389	1152	78	2.57	OKAY
160	11	3	3.500	2.864	0.318	1022	69	2.32	OKAY
128	13.5	3	3.500	2.982	0.259	908	61	2.09	OKAY
110	15.5	3	3.500	3.048	0.226	841	57	1.94	OKAY
100	**17**	**3**	**3.500**	**3.088**	**0.206**	**799**	**54**	**1.86**	**OKAY**
89	19	3	3.500	3.132	0.184	751	51	1.76	OKAY
80	21	3	3.500	3.166	0.167	713	48	1.66	OKAY
64	26	3	3.500	3.230	0.135	636	43	1.49	NO GOOD
51	32.5	3	3.500	3.284	0.108	565	38	1.34	NO GOOD
267	7	4	4.500	3.214	0.643	1348	91	2.94	OKAY
200	9	4	4.500	3.500	0.500	1152	78	2.57	OKAY
160	11	4	4.500	3.682	0.409	1022	69	2.32	OKAY
128	13.5	4	4.500	3.834	0.333	908	61	2.09	OKAY
110	15.5	4	4.500	3.020	0.290	953	64	1.71	OKAY
100	17	4	4.500	3.970	0.265	800	54	1.85	OKAY
89	19	4	4.500	4.026	0.237	752	51	1.75	OKAY
80	21	4	4.500	4.072	0.214	712	48	1.67	OKAY
64	26	4	4.500	4.154	0.173	635	43	1.49	NO GOOD
51	32.5	4	4.500	4.224	0.138	563	38	2.68	OKAY
267	7	6	6.625	4.733	0.946	1347	91	5.88	OKAY
200	9	6	6.625	5.153	0.736	1152	78	5.15	OKAY
160	11	6	6.625	5.421	0.602	1022	69	4.64	OKAY
128	13.5	6	6.625	5.643	0.491	909	61	4.18	OKAY
110	15.5	6	6.625	5.771	0.427	841	57	3.88	OKAY
100	17	6	6.625	5.845	0.390	799	54	3.71	OKAY
89	19	6	6.625	5.927	0.349	752	51	3.51	OKAY
80	21	6	6.625	5.995	0.315	712	48	3.33	OKAY
64	26	6	6.625	6.115	0.255	635	43	2.99	OKAY
51	32.5	6	6.625	6.217	0.204	565	38	2.68	OKAY

Use 3 inch HDPE - SDR 17 Pipe

G.N. Richardson & Associates, Inc.
ENGINEERING AND GEOLOGICAL SERVICES

DATE 19-Oct-05
BY SAS
JOB NO JOHNSTON-21

Leachate Management
Johnston County C&D Landfill
Leachate Pumping System Design

Section From	Section To	3. Total Flow (GPM)	4. Velocity (1) (FPS)	4a. Pipe Slope (%)	5. Pipe Size (IN)	6. Pipe Length (FT)	7. Friction Loss (2) (PSI)	8. Sum of Energy Loss Coefficients (3) (K)	9. Minor Losses (4) (PSI)	10. Elevation Head (5) (FT)	10. Additional Pressures (PSI)	11. Sum of Losses (PSI)	12. Subtotal Dynamic Head (FT)	13. Total Dynamic Head (FT)
Area 2 Sump	Valve Box	100	4.54	N/A	3.000	50	0.66	23	7.37	12	0.00	13.22	30.51	151
Valve Box	Air Release	100	4.29	N/A	3.088	700	8.04	4	1.14	40	0.00	26.50	61.15	
Air Release	Phase 4A, LDS Manhole	100	5.92	5.00	3.088	1400	16.07	4	2.18	-40	0.00	0.93	2.14	
Phase 4A, LDS Manhole	Low Point (29+00 Profile)	100	5.92	5.00	3.088	800	9.19	4	2.18	-17	0.00	4.00	9.24	
Low Point (29+00 Profile)	Existing Manhole	100	4.29	N/A	3.088	600	6.89	4	1.14	29	0.00	20.59	47.51	
Existing Manhole (See Note 6)	Leachate Storage Lagoon	260	4.59	1.00	7.057	1600	1.93	4	1.31	-12	0.00	-1.96	-4.51	-5

Pipe Roughness, C = 130 -----> Conservative for HDPE Pipe, Ref. 2
Manning's Roughness, n = 0.009 -----> Recommended for HDPE Pipe, Ref. 2

Notes:

1. Velocity determined by V = Q/A for forced systems and by V = (sqrt (slope)*D^(2/3))/(8.9*n) for gravity systems
2. Friction losses determined by Hazen-Williams Formula.
3. Enegy Loss Coefficient, K was calculated according to values in Tables B-6 and B-7, "Pumping Station Design", 2nd Edition by Robert L. Sanks.
4. Minor losses determined by a portion of Bernoulli's Principle ($kv^2/2g$).
5. Elevation head determined from the site plan.
6. Flows through existing manhole were evaluated assuming all flows from Phase 5, Phase 4A (Primary and LDS), and from Area II at simultaneous condition.

< 0
∴ ok!

Pump Schedule: Area II Pump —> USE LEACHATOR PUMP MODEL LPS150MSTG12075-04

4/6

MODEL LPS150MSTG

PUMP PERFORMANCE DATA

Performance Curve

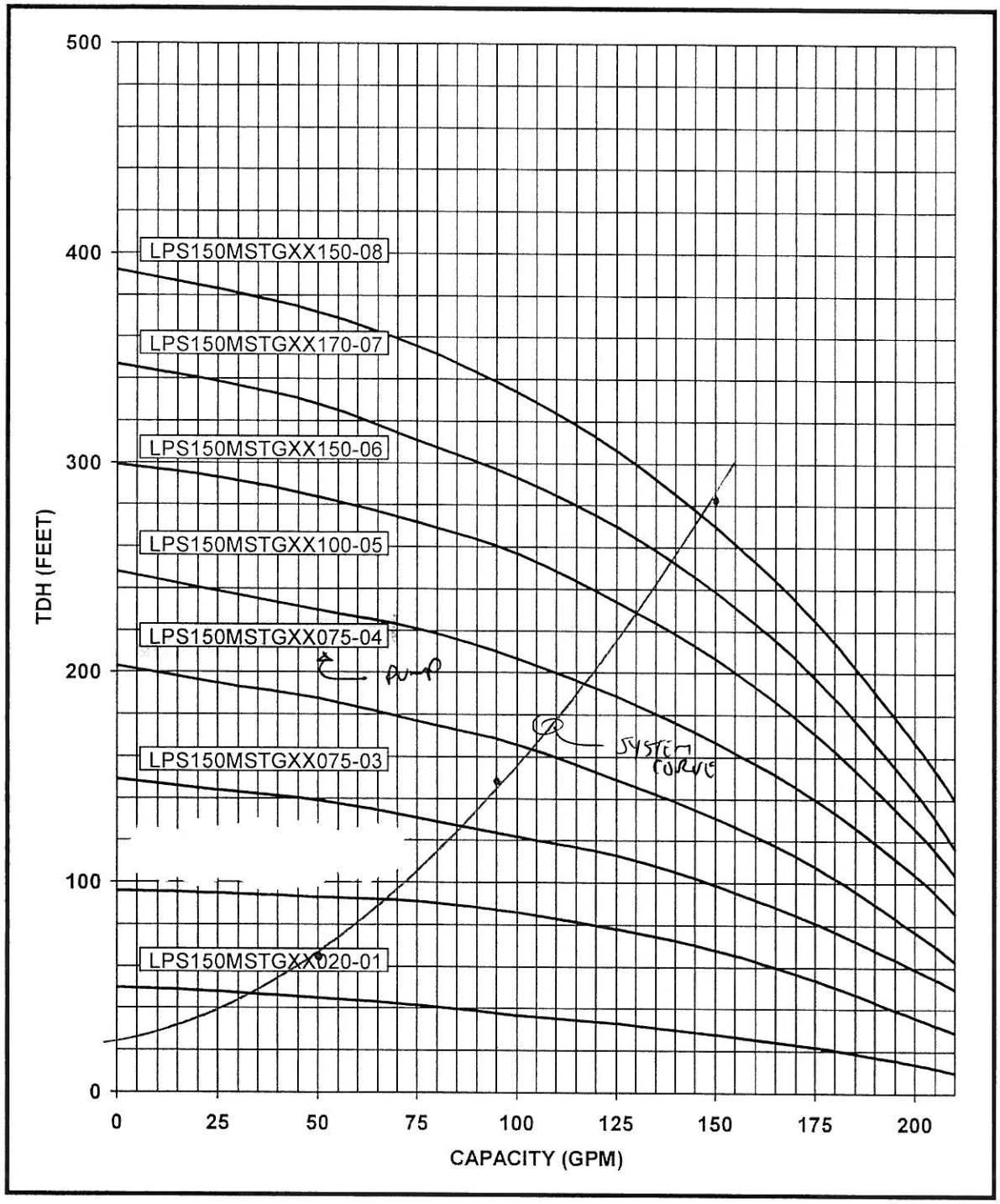

SPECIFICATIONS SUBJECT TO CHANGE WITHOUT NOTICE
Performance conforms to ISO 2548 Annex B @ 5 ft. min. submergence.
4" MOTOR STANDARD, 2 – 5HP, 3450 RPM
6" MOTOR STANDARD, 7-1/2 – 60HP, 3450 RPM
8" MOTOR STANDARD, 75HP, 3525

Models

Model Number	Motor Size	HP	RPM	Voltage
LPS150MSTG12020-01	4"	2	3450	230V/1Ph/60Hz
LPS150MSTG3X020-01	4"	2	3450	230-460V/3Ph/60Hz
LPS150MSTG12050-02	4"	5	3450	230V/1Ph/60Hz
LPS150MSTG3X050-02	4"	5	3450	230-460V3Ph/60Hz
LPS150MSTG12075-03	6"	7-1/2	3450	230V/1Ph/60Hz
LPS150MSTG3X075-03	6"	7-1/2	3450	230-460V/3Ph/60Hz
LPS150MSTG12075-04	6"	7-1/2	3450	230V/1Ph/60Hz
LPS150MSTG3X075-04	6"	7-1/2	3450	230-460V/3Ph/60Hz
LPS150MSTG12100-05	6"	10	3450	230V/1Ph/60Hz
LPS150MSTG3X100-05	6"	10	3450	230-460V/3Ph/60Hz
LPS150MSTG12150-06	6"	15	3450	230V/1Ph/60Hz
LPS150MSTG3X150-06	6"	15	3450	230-460V3Ph/60Hz
LPS150MSTG12150-07	6"	15	3450	230V/1Ph/60Hz
LPS150MSTG3X150-07	6"	15	3450	230-460V/3Ph/60Hz
LPS150MSTG12150-08	6"	15	3450	230V/1Ph/60Hz
LPS150MSTG3X150-08	6"	15	3450	230-460V/3Ph/60Hz

Please insert a "2" (230V) or "4" (460V) to complete the model number.

Dimensions And Weights

Model Number	Disch Size	Dimensions In Inches					Approx. Wt
		A	B	C	D	E	
LPS150MSTGXX020-01	3" NPT	27.3	13.6	13.7	3.75	5.2	55
LPS150MSTGXX050-02	3" NPT	41.1	23.6	17.5	3.75	5.2	75
LPS150MSTGXX075-03	3" NPT	45.5	24.2	21.3	5.38	5.2	101
LPS150MSTGXX075-04	3" NPT	49.9	24.2	25.7	5.38	5.6	135
LPS150MSTGXX100-05	3" NPT	54.9	25.4	29.5	5.38	5.6	148
LPS150MSTGXX150-06	3" NPT	61.3	28.0	33.3	5.38	5.6	167
LPS150MSTGXX150-07	3" NPT	65.0	28.0	37.0	5.38	5.6	169
LPS150MSTGXX150-08	3" NPT	68.8	28.0	40.8	5.38	5.6	174

Note(s): *Dimensions and weight are approximate (subject to change) and does not include the carriage.*

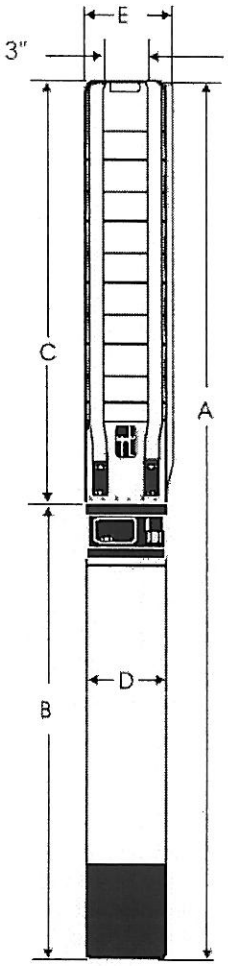

Materials Of Construction

Impeller	304 Stainless Steel
Impeller Seal Ring	Teflon
Motor Adapter	304 Stainless Steel
Inlet Screen	304 Stainless Steel
Pump Shaft	431 Stainless Steel
Coupling	329/416 Stainless Steel
Check Valve Housing	304 Stainless Steel
Check Valve	304 Stainless Steel
Check Valve Seat	Teflon/316 Stainless Steel
Diffuser Chamber	304 Stainless Steel
Fasteners	304 Stainless Steel
Bearing	Teflon/316 Stainless Steel
Suspension Cables	304 Stainless Steel

PROJECT Johnston County C&D Landfill - Area 2
JOB NO. JOHNSTON-22
DATE 7/14/05
SUBJECT Final Cover Drainage Layer Analysis
COMPUTED BY PKS
CHECKED BY

Objective To evaluate the required transmissivity for the drainage geocomposite placed in the final cover system.

References Richardson, G.N., Giroud, J.P., and Zhao, A. (2001), Design Manual of Lateral Drainage Systems for Landfills, Tenax Corp., Baltimore.

Analysis **Step 1:**

Determine the required transmissivity (θ_{reqd}) of the drainage geocomposite based on the following equation:

$$\theta_{reqd} = \frac{RF_{dc} q_n L i}{\sin\beta} = \frac{RF_{dc} q_n L \cos\beta}{\sin\beta} = \frac{RF_{dc} q_n L}{\tan\beta} \qquad (m^3/m/sec)$$

Where:
RF_{dc} = drainage geocomposite reduction factor (See Note 1)
q_n = fluid input rate/impingement rate (m/s) (See Note 2)
L = flow length/drain spacing (horizontally projected) (m)
β = slope angle of final cover (degrees).

Notes:

1. Based on the recommendations of Richardson, Giroud, & Zhao, use $RF_{dc} = 6$. This accounts for an overall factor of safety of 2, plus a factor of safety of 3 for long-term intrusion, creep, and clogging concerns.

2. Typically the impingement into the drainage geocomposite is determined by the **lessor** of:

   a. Permeability of the Overlying Vegetative Soil Layer(k_{veg}) or
   b. Design Rainfall.

   Per Richardson,Giroud, & Zhao, use $q_n = k_{veg}$ except in arid/semi-arid areas.

Step 2:

Determine the required transmissivity test parameters:

- Normal Stress (Cover Thickness x Unit Weight of Cover Soil) and
- Hydraulic Gradient (Equals Slope of Cover System).

FCS DRAIN LAYER.WPD

Step 3:

Calculate the required total flow capacity (Q) of the drain based on the following equation:

$$Q = q_n A \qquad \text{(cfs)}$$

Where:
- q_n = impingement (ft/s)
- A = total area served by the drain (= L x DL) (ft^2)
- DL = length of drain between outlet locations (ft).

Step 4:

After finding Q for each drain, the designer shall select the appropriate type and size of drain.

G.N. Richardson & Associates
Engineering and Geological Services
14 N. Boylan Avenue
Raleigh, NC 27603
Tel: 919-828-0577
Fax: 919-828-3899

SHEET: 3 / 3
JOB #: JOHNSTON-22
DATE: 7/15/05
BY: PKS
CHKD BY:

Johnston County C&D Landfill - Area 2
Final Cover Drainage Layer Analysis

Input Parameters:

Side Slope Angle (β):	14.0	degrees	
Impingement (q_n):	0.0001	cm/sec	(= Permeability of Vegetative Soil Layer)
Drain Spacing (L):	140	ft	
Reduction Factors for Drainage Geocomposite:			(Per Richardson, Giroud, & Zhao Recommendations)
$RF_{intrusion}$:	1.2		
RF_{creep}:	1.4		
$RF_{chemical\ clogging}$:	1.2		
$RF_{biological\ clogging}$:	1.5		
Overall Factor of Safety:	2.0		
Reduction Factor for Drainage Geocomposite in Final Cover (RF_{dc}):	6.0		
Drain Length (DL):	200	ft	
Final Cover: Thickness:	2.0	ft	
Unit Weight:	110	pcf	

Note: Spreadsheet Converts Units as Required.

Transmissivity Requirements:

Determine Minimum Transmissivity:

θ_{min} = 1.0E-03 m^3/m/sec = 5.0 gpm/ft

Determine Transmissivity Test Parameters:

Min. Normal Stress = 220.0 psf

Hydraulic Gradient = 0.25

Determine Required Drain Capacity:

Calculate Required Total Flow Capacity:

Q = 0.09 cfs

*Based on 200 foot spacing between outlets.

PROJECT Johnston County C&D Landfill - Area 2

SUBJECT Rain Gutters & Down Pipe Sizing

JOB NO. JOHNSTON-22
DATE 7/14/05
COMPUTED BY PKS
CHECKED BY

Objective To design rain gutters and down pipes to handle the maximum flow from the design storm.

References

Debo, T.N., and Reese, A.J., Municipal Storm Water Management, Lewis Publishers, Boca Raton, FL, 1995, pp. 438-442.

Malcom, H. Rooney, Elements of Urban Stormwater Design, N.C. State University, Raleigh, NC, 1989.

Analysis

1. For each pipe size, determine the maximum area (A), to handle the predicted flow (Q) with an added factor of safety. Analyze rain gutters and down pipes based on partial flow to determine flow depth and velocity then compare the full flow capacity of each pipe size with the calculated peak flow rate to verify the desired factor of safety. Analyze rain gutter drop inlets (inlet to down pipes) as orifices.

2. Analyze rain gutter pipe perforations as orifice flow to ensure adequate flow capacity into rain gutters.

Calculations

- Determine Peak Flow Rate Into Each Respective Conveyance:

Use Rational Method:

$$Q = CIA$$

Where:
Q = Flow (cfs)
C = Runoff Coefficient
I = Rainfall Intensity (Use 25-Year, 24-Hour Storm)
A = Drainage Area (Ac.)

Iterate the drainage area (A) to each drainage structure such that $Q_{max}/Q \geq 1.1$, where Q_{max} is the full flow capacity of the conveyance (see below).

G.N. RICHARDSON & ASSOCIATES
Engineering and Geological Services
14 N. Boylan Avenue, Raleigh, NC 27603
Telephone: (919) 828-0577

- Rain Gutters & Down Pipes:

Determine Flow Capacity (Q_{max}):

$$Q_{max} = \frac{0.463 D^{\frac{8}{3}} S^{\frac{1}{2}}}{n}$$ (D&R Equation 8.24)

Where:
D = Pipe Inside Diameter (in)
S = Pipe Slope (ft/ft)
n = Manning's Roughness Coefficient

Determine Factor of Safety (FS):

$$FS = \frac{Q_{max}}{Q}$$

Determine Flow Depth:

$$h = \frac{1}{2}\left(1 - \cos\left(\frac{\theta}{2}\right)\right) D$$ (D&R Equation 8.29)

Where:
h = Flow Depth (inches)
θ = Central Angle

$$\theta = \frac{3\pi}{2}\left[1 - (1 - \pi K)^{\frac{1}{2}}\right]^{\frac{1}{2}}$$ (D&R Equation 8.28)

K = Constant

$$K = 0.673 Q_n^{\frac{-8}{3}} S^{\frac{-1}{2}}$$ (D&R Equation 8.27)

Determine Flow Velocity:

$$V = \frac{Q}{A} = \frac{Q}{D^2 \frac{(\theta - \sin\theta)}{8}}$$ (D&R Equation 8.30 for "A")

Where: V = Flow Velocity (ft/sec)
A = Cross-Sectional Area of Flow (ft^3)

- Down Pipe Drop Inlets and Rain Gutter Pipe Perforations:

Determine Q_{max}:

$$Q_{max} = C_d A \sqrt{2gh}$$ (Malcom Equation I-7)

Where: C_d = Coefficient of Discharge
A = Cross-Sectional Area of Flow (ft^3)
g = Acceleration of Gravity (32.2 ft/sec^2)
h = Driving Head - Centroid of Orifice to Water Surface (ft)

Determine Factor of Safety (FS):

$$FS = \frac{Q_{max}}{Q}$$

G.N. Richardson & Associates
Engineering and Geological Services
14 N. Boylan Avenue Tel: 919-828-0577
Raleigh, NC 27603 Fax: 919-828-3899

SHEET: 4 / 4
JOB #: JOHNSTON-22
DATE: 7/15/05
BY: PKS
CHKD BY:

Johnston County C&D Landfill - Area 2
Rain Gutter/Down Pipe Design

Input Parameters:

Manning's Rougness Coefficient =	**0.009**	--> HDPE Pipe
Runoff Coefficient =	**0.5**	
Rainfall Intensity =	**8.19**	IN/HR ---> 25 YR - 5 MIN STORM
Allowable Head (Down Pipe Drop Inlets) =	**24**	INCHES
Orifice Coef. Of Discharge (Down Pipe Drop Inlets) =	**0.6**	TYPICAL
Hole Diameter (Rain Gutter Pipe Bottom Perforations) =	**0.5**	INCHES
Allowable Head (Rain Gutter Pipe Bottom Perforations) =	**12**	INCHES
Orifice Coef. Of Discharge (Rain Gutter Pipe Perforations) =	**0.6**	TYPICAL

Rain Gutters

ID	Drainage Area (AC)	Runoff Volume (Q) (CFS)	Pipe I.D. (SDR 26) (IN)	Pipe Slope (%)	Flow Capacity (Q_{max}) (CFS)	Factor of Safety (>/= 1.10)	K (CONSTANT)	θ (< 265°)	Flow Depth (IN)	Flow Area (SF)	Flow Velocity (FPS)
Max. Area - 6"	**0.32**	1.31	**6.1**	**3**	1.47	1.12	0.278	233	4.41	0.16	8.33
Max. Area - 8"	**0.67**	2.74	**8.0**	**3**	3.02	1.10	0.283	235	5.86	0.27	10.01
Max. Area - 10"	**1.18**	4.83	**9.9**	**3**	5.33	1.10	0.282	235	7.24	0.42	11.53
Max. Area - 12"	**1.89**	7.74	**11.8**	**3**	8.52	1.10	0.283	236	8.65	0.60	12.97

Down Pipe Drop Inlets

ID	Drainage Area (AC)	Runoff Volume (Q) (CFS)	Pipe I.D. (SDR 26) (IN)	X-Sectional Area (SF)	Flow Capacity (Q_{max}) (CFS)	Factor of Safety (>/= 1.10)
Max. Area - 8"	**0.52**	2.13	**8.0**	0.35	2.38	1.12
Max. Area - 10"	**0.80**	3.28	**9.9**	0.53	3.64	1.11
Max. Area - 12"	**1.14**	4.67	**11.8**	0.76	5.17	1.11
Max. Area - 14"	**1.37**	5.61	**12.9**	0.91	6.18	1.10
Max. Area - 16"	**1.80**	7.37	**14.8**	1.19	8.14	1.10
Max. Area - 18"	**2.27**	9.30	**16.6**	1.50	10.23	1.10

Down Pipes

ID	Drainage Area (AC)	Runoff Volume (Q) (CFS)	Pipe I.D. (SDR 26) (IN)	Pipe Slope (%)	Flow Capacity (Q_{max}) (CFS)	Factor of Safety (>/= 1.10)	K (CONSTANT)	θ (< 265°)	Flow Depth (IN)	Flow Area (SF)	Flow Velocity (FPS)
Max. Area - 8"	**1.02**	4.18	**8.0**	**7**	4.62	1.11	0.282	235	5.85	0.27	15.28
Max. Area - 10"	**1.80**	7.37	**9.9**	**7**	8.15	1.11	0.282	235	7.23	0.42	17.61
Max. Area - 12"	**2.88**	11.79	**11.8**	**7**	13.01	1.10	0.282	235	8.63	0.60	19.81
Max. Area - 14"	**3.66**	14.99	**12.9**	**7**	16.51	1.10	0.283	236	9.45	0.71	21.03
Max. Area - 16"	**5.27**	21.58	**14.8**	**7**	23.81	1.10	0.282	235	10.83	0.94	23.04
Max. Area - 18"	**7.17**	29.36	**16.6**	**7**	32.34	1.10	0.283	236	12.16	1.18	24.88

Rain Gutter Pipe Perforations

ID	Max. Drainage Length (LF)	Runoff Volume/LF Pipe (CFS)	No. Holes/LF	X-Sectional Area (SF/Hole)	Flow Capacity (Q_{max}) (CFS/LF)	Factor of Safety (>/= 1.10)
2 Bottom Perfs. @ 4" O.C.	**200**	0.019	**6**	0.001	0.039	2.10

Note: Conservatively Neglects Upper Holes.

Pipe Dimensions

Standard Dimension Ratio (SDR) of Pipe = **26**

Nominal Pipe Size (IN)	Pipe O.D. (IN)	Min. Wall Thickness (IN)	Pipe I.D. (IN)
6	**6.625**	0.255	6.1
8	**8.625**	0.332	8.0
10	**10.75**	0.413	9.9
12	**12.75**	0.490	11.8
14	**14**	0.538	12.9
16	**16**	0.615	14.8
18	**18**	0.692	16.6
24	**24**	0.923	22.2

Appendix B

Local Government Approval Documentation

AFFIDAVIT OF PUBLICATION

NORTH CAROLINA.
Johnston County.) Ss.

NOTICE OF PUBLIC HEARING

The Johnston County Board of Commissioners will hold a public hearing on Tuesday, January 3, 2006, at 1:15 p.m., or as soon thereafter as possible, in the Commissioners' meeting room, Johnston County Courthouse Annex, Smithfield, N.C. 27577.

The public hearing will be for the purpose of informing the community and receiving public comment concerning the proposed amendment of the Johnston County Landfill Facility Plan. The proposed amendment involves the permitting and installation of a construction and demolition (C&D) landfill cell.

Deva C. Holt, Deputy Clerk
Johnston County
Board of Commissioners
November 22

Before the undersigned, a Notary Public of Chatham County North Carolina, duly commissioned and authorized to administer oaths, affirmations, etc., personally appeared Donna Clayton, who, being duly sworn or affirmed, according to law, doth depose and say that she is Billing Manager-Legal Advertising of The Herald a corporation organized and doing business under the Laws of the State of North Carolina, and publishing a newspaper known as The Herald , in the City of Smithfield , Johnston County and State aforesaid, the said newspaper in which such notice, paper, document, or legal advertisement was published was, at the time of each and every such publication, a newspaper meeting all of the requirements and qualifications of Section 1-597 of the General Statutes of North Carolina and was a qualified newspaper within the meaning of Section 1-597 of the General Statutes of North Carolina, and that as such she makes this affidavit; that she is familiar with the books, files and business of said corporation and by reference to the files of said publication the attached advertisement for JOHNSTON COUNTY was inserted in the aforesaid newspaper on dates as follows: 11/22/05

Account Number: 98951001

The above is correctly copied from the books and files of the aforesaid Corporation and publication.

Donna Clayton

Billing Manager-Legal Advertising

Janet Scroggs Notary Public Chatham County, NC

Sworn or affirmed to, and subscribed before me, this 28 day of NOVEMBER , 2005 AD

In Testimony Whereof, I have hereunto set my hand and affixed my official seal, the day and year aforesaid.

Janet Scroggs

Notary Public

My commission expires 14th of March 2009.

JOHNSTON COUNTY

JOHNSTON COUNTY LANDFILL
RESOLUTION TO APPROVE THE AREA 2 C&D LANDFILL UNIT AND AMENDED LANDFILL FACILITY PLAN

BE IT RESOLVED that the Board of County Commissioners of Johnston County hereby grants approval for the issuance of a landfill permit by the Division of Waste Management for the Area 2 construction and demolition debris (C&D) landfill unit including an amended facility plan for the entire landfill facility in compliance with North Carolina Solid Waste Management Rules T15A NCAC 13B.1618(c)(5)(A). The proposed Area 2 landfill unit consists of up to approximately 15.8 acres of waste footprint located within the previously approved landfill facility boundary (approximate 500 acre tract owned by the County) as shown on Drawing S2 of Permit Drawings dated October 2005 (see attached). The Board of County Commissioners hereby approves the following items related to the proposed landfill unit and amended landfill facility plan:

1. Service Area:
   The landfill serves the State of North Carolina.

2. Disposal Rates:
   The landfill facility will accept waste at the following maximum rates (tons/day is based on 312 operating days per year):

   2006-2015 350,000 tons/year (1,122 tons/day)
   2016-2025 401,000 tons/year (1,285 tons/day)
   2026-2035 452,000 tons/year (1,449 tons/day)
   2036-2045 505,000 tons/year (1,619 tons/day)
   2046-2055 568,000 tons/year (1,821 tons/day)

   Of the rates shown, a maximum of 156,000 tons/year (500 tons/day) will be from outside the County.

3. Landfill Volumes:
   The landfill facility will provide the following gross volumes (volume of waste plus periodic and final cover soil) consistent with the contours shown on the Drawing S3 of the Permit Drawings dated October 2005 (see attached):

Landfill Units	Total Waste Footprint	Gross Volume
Lined MSW (Phases 4A and 5-10)	154.7 AC	18,367,420 CY
C&D (Areas 1 and 2)	32.0 AC	1,489,824 CY

4. Landfill Service Life:
Depending upon the actual disposal rates, the landfill is projected to have an approximate service life of between 29 and 46 years (MSW units) and between 12 to 14 years (C&D units).

Adopted, this 3rd day of January, 2006.

JOHNSTON COUNTY BOARD OF COMMISSIONERS

Cookie Pope

Cookie Pope, Chairman

April N. Byrd

Attest: April N. Byrd
Clerk to the Board

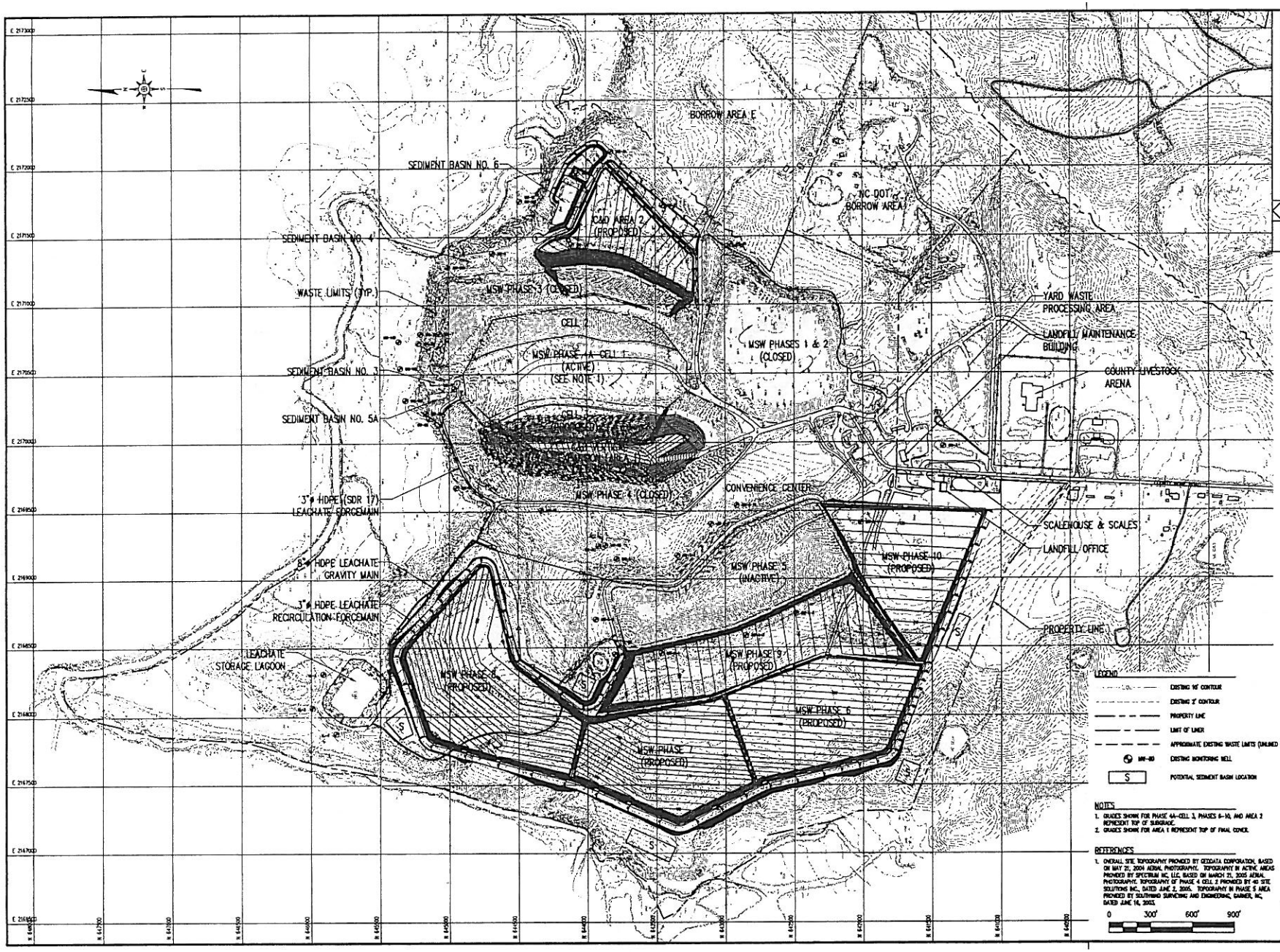
BORROW AREA E
SEDIMENT BASIN NO. 6
C&D AREA 2 (PROPOSED)
N.C. DOT BORROW AREA
SEDIMENT BASIN NO. 4
WASTE LIMITS (TYP.)
MSW PHASE 3 (CLOSED)
CELL 2
MSW PHASE 4A CELL 1 (ACTIVE) (SEE NOTE 1)
MSW PHASES 1 & 2 (CLOSED)
YARD WASTE PROCESSING AREA
LANDFILL MAINTENANCE BUILDING
COUNTY LIVESTOCK ARENA
SEDIMENT BASIN NO. 3
SEDIMENT BASIN NO. 5A
C&D VERTICAL EXPANSION (AREA 1)
MSW PHASE 4 (CLOSED)
CONVENIENCE CENTER
3" ø HDPE (SDR 17) LEACHATE FORCEMAIN
SCALEHOUSE & SCALES
LANDFILL OFFICE
8" ø HDPE LEACHATE GRAVITY MAIN
MSW PHASE 5 (INACTIVE)
MSW PHASE 10 (PROPOSED)
3" ø HDPE LEACHATE RECIRCULATION FORCEMAIN
PROPERTY LINE
LEACHATE STORAGE LAGOON
MSW PHASE 8 (PROPOSED)
MSW PHASE 9 (PROPOSED)
MSW PHASE 6 (PROPOSED)
MSW PHASE 7 (PROPOSED)
LEGEND
EXISTING 10' CONTOUR
EXISTING 2' CONTOUR
PROPERTY LINE
LIMIT OF LINER
APPROXIMATE EXISTING WASTE LIMITS (UNLINED UNITS)
MW-80 EXISTING MONITORING WELL
S POTENTIAL SEDIMENT BASIN LOCATION
NOTES
1. GRADES SHOWN FOR PHASE 4A-CELL 3, PHASES 6-10, AND AREA 2 REPRESENT TOP OF SUBGRADE.
2. GRADES SHOWN FOR AREA 1 REPRESENT TOP OF FINAL COVER.
REFERENCES
1. OVERALL SITE TOPOGRAPHY PROVIDED BY GEODATA CORPORATION, BASED ON MAY 21, 2004 AERIAL PHOTOGRAPHY. TOPOGRAPHY IN ACTIVE AREAS PROVIDED BY SPECTRUM INC, LLC, BASED ON MARCH 21, 2005 AERIAL PHOTOGRAPHY. TOPOGRAPHY OF PHASE 4 CELL 3 PROVIDED BY 40 SITE SOLUTIONS INC., DATED JUNE 2, 2005. TOPOGRAPHY IN PHASE 5 AREA PROVIDED BY SOUTHWIND SURVEYING AND ENGINEERING, GARNER, NC, DATED JUNE 16, 2003.
0 300' 600' 900'
G. N. RICHARDSON & ASSOCIATES, INC.
Engineering and Geological Services
1414 Boylan Ave. Raleigh, N.C. 27603
ph: 919-828-5577
fax: 919-828-3899
www.gnra.com
PROJECT TITLE: JOHNSTON COUNTY C&D LANDFILL AREA 2 PERMIT DRAWINGS
DRAWING TITLE: SITE DEVELOPMENT PLAN BASE GRADES (MSW AND C&D UNITS)
DESIGNED BY: P.K.S.
DRAWN BY: J.A.L.
CHECKED BY:
PROJECT NO.: JOHN-22
SCALE: AS SHOWN
DATE: OCT. 2005
FILE NAME: JOHN-D05B6
SHEET NO. 3
DRAWING NO. S2

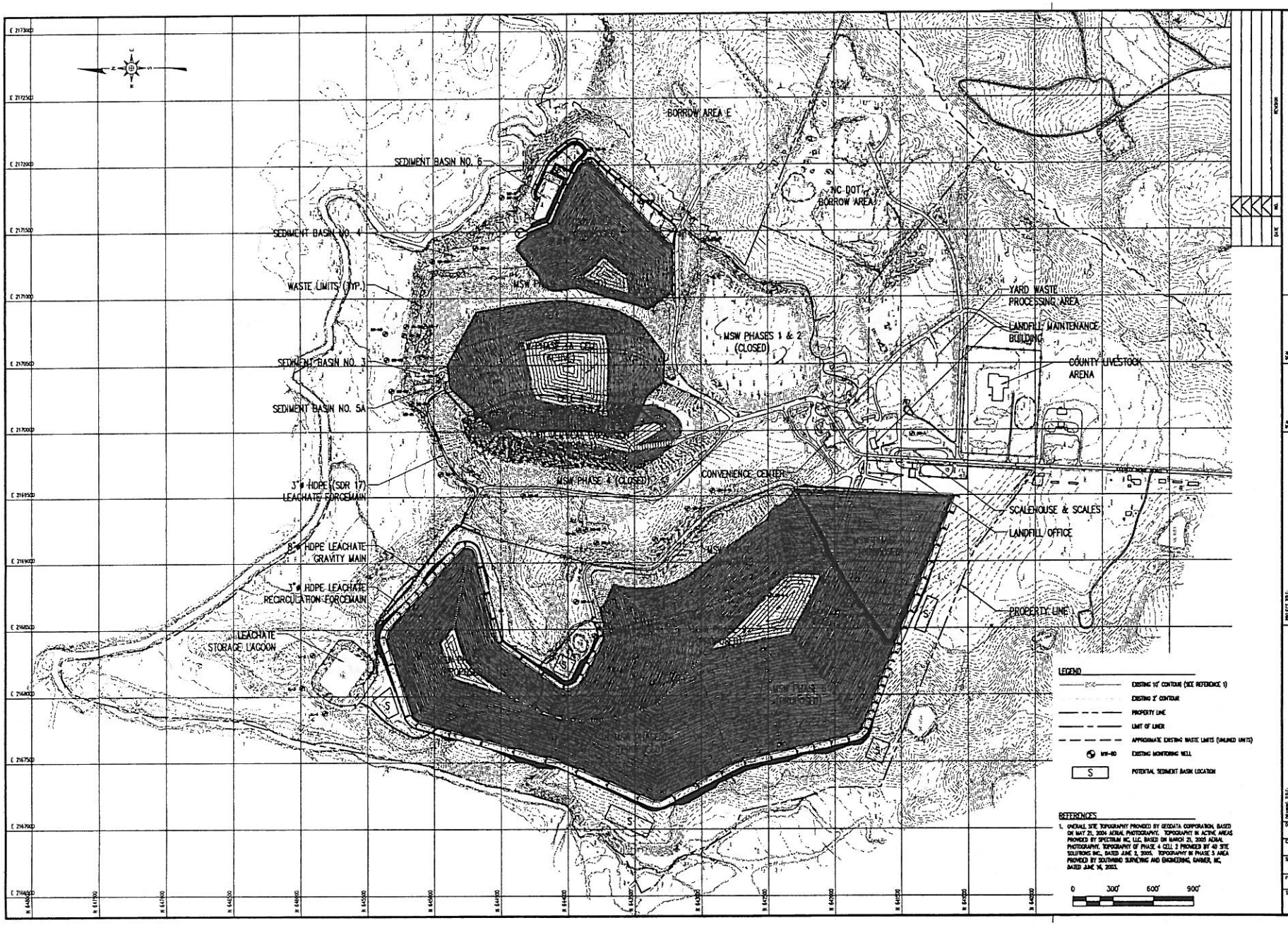
BORROW AREA E
SEDIMENT BASIN NO. 6
NC DOT BORROW AREA
SEDIMENT BASIN NO. 4
WASTE LIMITS (TYP.)
MSW PHASE 3A (CLOSED)
MSW PHASES 1 & 2 (CLOSED)
YARD WASTE PROCESSING AREA
LANDFILL MAINTENANCE BUILDING
COUNTY LIVESTOCK ARENA
SEDIMENT BASIN NO. 3
SEDIMENT BASIN NO. 5A
3" ø HDPE (SDR 17) LEACHATE FORCEMAIN
MSW PHASE 4 (CLOSED)
CONVENIENCE CENTER
SCALEHOUSE & SCALES
LANDFILL OFFICE
8" ø HDPE LEACHATE GRAVITY MAIN
3" ø HDPE LEACHATE RECIRCULATION FORCEMAIN
PROPERTY LINE
LEACHATE STORAGE LAGOON
LEGEND
EXISTING 10' CONTOUR (SEE REFERENCE 1)
EXISTING 2' CONTOUR
PROPERTY LINE
LIMIT OF LINER
APPROXIMATE EXISTING WASTE LIMITS (UNLINED UNITS)
MW-80 EXISTING MONITORING WELL
S POTENTIAL SEDIMENT BASIN LOCATION
REFERENCES
1. OVERALL SITE TOPOGRAPHY PROVIDED BY GEODATA CORPORATION, BASED ON MAY 21, 2004 AERIAL PHOTOGRAPHY. TOPOGRAPHY IN ACTIVE AREAS PROVIDED BY SPECTRUM NC, LLC BASED ON MARCH 23, 2005 AERIAL PHOTOGRAPHY. TOPOGRAPHY OF PHASE 4 CELL 2 PROVIDED BY 40 SITE SOLUTIONS INC., DATED JUNE 2, 2005. TOPOGRAPHY IN PHASE 5 AREA PROVIDED BY SOUTHERN SURVEYING AND ENGINEERING, KARNER, NC, DATED JUNE 14, 2002.
0 300' 600' 900'
G. N. RICHARDSON & ASSOCIATES, INC.
Engineering and Geological Services
14 N. Boylan Ave.
Raleigh, N.C. 27603
www.gnra.com
ph: 919-828-0577
fax: 919-828-3859
PROJECT TITLE: JOHNSTON COUNTY C&D LANDFILL AREA 2 PERMIT DRAWINGS
DRAWING TITLE: SITE DEVELOPMENT PLAN FINAL COVER GRADES (MSW AND C&D UNITS)
DESIGNED BY: P.K.S.
DRAWN BY: J.A.L.
CHECKED BY:
PROJECT NO.: JOHN-22
SCALE: AS SHOWN
DATE: OCT 2005
FILE NAME: JOHN-D0207
SHEET NO. 4
DRAWING NO. S3

That Johnston County has substantially complied or will substantially comply with all Federal, State, and local laws, rules, regulations, and ordinances applicable to the project and to the grants pertaining thereto.

Adopted this the 3rd day of January 2006 at Smithfield, North Carolina.

5. **Public Hearing – 1:15 p.m. – Proposed Amendment to County Landfill Facility Plan**
Advertised: November 22, 2005 The Smithfield Herald

The Chairman opened the public hearing and stated the purpose of the hearing is to inform the community and receive public comment concerning a proposed amendment to the Johnston County Landfill Facility Plan. The proposed amendment involves the permitting and installation of a construction and demolition (C&D) landfill cell.

Haywood M. Phthisic, Assistant Public Utilities Director, informed the Board that he would be presenting the County's Solid Waste Plan for development of the next Construction and Demolition phase (C&D - Area 2) and an amended facility plan for the entire landfill facility, and also requesting expansion of the landfill service area. He presented a power-point presentation, which included the following information:

- Aerial photo of the County's Solid Waste Facilities located on County Home Road, north of Smithfield.
- Graph illustrating solid waste trends (municipal solid waste (MSW), construction and demolition (C&D), and yard waste) from 1998 to 2005.
- Current solid waste disposal rates from July 1, 2004 to June 30, 2005; MSW disposal rate of 350 tons per day, and C&D disposal rate of 100 tons per day.
- MSW projections for 2015, 2025, and 2035.
- Current solid waste facility plan.
- Proposed solid waste plan amendment outlining proposed expansion areas; the proposed C&D – Area 2 is located to the east of the active sites, and the proposed MSW – Phase 5-10 cells are located to the west of the active sites.
- Cross section view of permitted and proposed facility plan; the proposed MSW – Phases 6-10 cells would top-out at 375 ft. above sea level; the current MSW - Phase 5 cell tops-out at 250 ft.
- Total operating capacity and life expectancy of proposed facility plan; the proposed lined cells would provide 15,135,600 cubic yards of air space, and life expectancy is up to 46.3 years; the proposed C&D – Area 2 would provide 1,254,045 cubic yards of air space, and life expectancy is up to 14.2 years.

Further, Mr. Phthisic stated the County's current permit only allows the landfill to accept waste from inside the county. He requested the Board approve the expansion of the landfill's service area to include the State of NC, with the stipulation that the Board of Commissioners must approve acceptance of waste from outside the county.

In response to questions from Commissioner Wade M. Stewart, Mr. Phthisic noted that since 1997, County policy has been to assess a fee four times the normal tipping fee charge for waste identified as coming from outside the county. He pointed out that expansion of the service area to include all of NC would allow Johnston County to assist other landfills in times of crises, i.e., hurricanes and other natural disasters.

County Manager Rick Hester clarified the Board would have to approve acceptance of waste from outside the county.

Commissioner Allen L. Mims, Jr. questioned whether accepting waste from outside Johnston County would affect the anticipated 70 year life of the County's landfill.

Mr. Phthisic responded the landfill's capacity would not be affected, given the County does not accept huge amounts of waste in times of crises from outside the county.

Commissioner Mims expressed that he did not have a problem with expanding the service area as long as all requests come before the Board of Commissioners for approval. Commissioner Jeffrey P. Carver agreed.

County Attorney Mark Payne added that expanding the service area would not affect the State's ability to force Johnston County to accept waste from other counties.

Dr. Greg Richardson, County Landfill Consultant, stated the power to control the acceptance of solid waste resides with the local authority, and pointed out the service area could be revised again at a later date, if the Board chose to take this action. He noted that Johnston County has the largest potential reserve capacity in the State.

In response to a question from Commissioner Cookie Pope regarding the difference between Johnston and Sampson counties, Mr. Richardson responded that Sampson County is a privately operated landfill, however, the County is still responsible for the landfill.

In response to a question from Commissioner Stewart, Mr. Phthisic stated the current landfill plan anticipates an approximate service life of between 29 and 46 years for MSW units, and 12 to 14 years for C&D units; however, he pointed out this plan does not include the additional acreage purchased.

Dr. Richardson added that, considering the additional acreage, Johnston County has the largest potential reserve capacity in the State.

Mr. Phthisic reiterated his request, and asked the Board to adopt a proposed resolution granting approval for the issuance of a landfill permit by the Division of Waste Management for the C&D – Area 2 landfill unit including an amended facility plan for the entire landfill facility, and expansion of the service area to include the State of NC.

There being no further comments, the Chairman closed the public hearing.

Decision Postponed Until January 3, 2006 6:00 pm Board Meeting

Commissioner Allen L. Mims, Jr. requested the Board postpone decision on the item until the January 3rd 6:00 pm meeting to allow Commissioner Mims ample time to review the proposed resolution. It was agreed that the decision be postponed as requested.

6. Surplus Property – Public Utilities

Haywood M. Phthisic, Assistant Public Utilities Director, requested the Board declare surplus the Trimble Pathfinder surveying equipment. In response to a question from Commissioner Wade M. Stewart, Mr. Phthisic noted the equipment, which uses Global Positioning Satellites (GPS), was purchased in 1997, and is now obsolete. The cost to keep the unit operational is greater than the replacement cost due to technological improvements.

Upon a motion by Commissioner DeVan Barbour, seconded by Commissioner Jeffrey P. Carver and carried by unanimous vote, the Board declared surplus the Trimble Pathfinder surveying equipment used by the Public Utilities department.

7. Board of Education – Request Approval of Budget Amendment

Chairman Pope postponed discussion of the item until a later date. (The Board of Education was requesting approval of a budget amendment, in the amount of $204,183.43, to adjust remaining bond balances to begin restoration of the South Campus Community School Gym.)

8. Board of Education - Request for Additional State ADM Construction Funding

On behalf of the Board of Education, Dr. Anthony Parker, Superintendent for Johnston County Schools, asked the Board to approve a request for additional State ADM Construction Funding, in the amount of $208,863, to allow early demolition of the three story building at Meadow Elementary School. He stated the Board of Education would like to authorize demolition of the three story building prior to the next bond sale scheduled for early summer 2006; the project was originally scheduled to be funded by this bond sale.

Commissioner Wade M. Stewart noted it was his understanding that the projected $2.5 million in funds from the summer 2006 bond sale is designated for the demolition of the three story building, and the construction of a new addition at the site. He questioned if $2.3 million from the bond sale would cover the

I hereby certify that this is a true and accurate copy which appears on record in the Minute Book of the Johnston County Board of Commissioners, Johnston County, NC.
In Book 24, Page 380-381
Witness my hand and seal this the 1 day of February, 2006
April N. Byrd, Clerk Dea C. Hott, Deputy Clerk
Johnston County Board of Commissioners

Dr. Parker confirmed that $2.3 million would cover the remainder of the project. He pointed out that there have been both under-runs and over-runs with several of the bond projects so far.

Upon a motion by Commissioner DeVan Barbour, seconded by Commissioner Tony Braswell and carried by unanimous vote, the Board approved the Board of Education's request for additional State ADM

4. Board Reports and Comments

(A) **Resolution To Approve the Area 2 C&D Landfill Unit and Amended Johnston County Landfill Facility Plan**

Upon a motion by Commissioner Allen L. Mims, Jr., seconded by Commissioner DeVan Barbour and carried by unanimous vote, the Board adopted the following resolution approving the Area 2 C&D Landfill Unit and Amended Johnston County Landfill Facility Plan, as discussed at a public hearing held on January 3, 2006 at 1:15 pm:

RESOLUTION TO APPROVE THE AREA 2 C&D LANDFILL UNIT AND AMENDED JOHNSTON COUNTY LANDFILL FACILITY PLAN

BE IT RESOLVED that the Board of County Commissioners of Johnston County hereby grants approval for the issuance of a landfill permit by the Division of Waste Management for the Area 2 construction and demolition debris (C&D) landfill unit including an amended facility plan for the entire landfill facility in compliance with North Carolina Solid Waste Management Rules T15A NCAC 13B.1618(c)(5)(A). The proposed Area 2 landfill unit consists of up to approximately 15.8 acres of waste footprint located within the previously approved landfill facility boundary (approximate 500 acre tract owned by the County) as shown on Drawing S2 of Permit Drawings dated October 2005 (see attached). The Board of County Commissioners hereby approves the following items related to the proposed landfill unit and amended landfill facility plan:

1. Service Area:

The landfill serves the State of North Carolina.

2. Disposal Rates:

The landfill facility will accept waste at the following maximum rates (tons/day is based on 312 operating days per year):

2006-2015	350,000 tons/year (1,122 tons/day)
2016-2025	401,000 tons/year (1,285 tons/day)
2026-2035	452,000 tons/year (1,449 tons/day)
2036-2045	505,000 tons/year (1,619 tons/day)
2046-2055	568,000 tons/year (1,821 tons/day)

Of the rates shown, a maximum of 156,000 tons/year (500 tons/day) will be from outside the County.

3. Landfill Volumes:

The landfill facility will provide the following gross volumes (volume of waste plus periodic and final cover soil) consistent with the contours shown on the Drawing S3 of the Permit Drawings dated October 2005 (see attached):

Landfill Units	Total Waste Footprint	Gross Volume
Lined MSW (Phases 4A and 5-10)	154.7 AC	18,367,420 CY
C&D (Areas 1 and 2)	32.0 AC	1,489,824 CY

4. Landfill Service Life:

Depending upon the actual disposal rates, the landfill is projected to have an approximate service life of between 29 and 46 years (MSW units) and between 12 to 14 years (C&D units).

I hereby certify that this is a true and accurate copy which appears on record in the Minute Book of the Johnston County Board of Commissioners, Johnston County, N.C.
In Book 24 **, Page** 396
Witness my hand and seal this the 7 **day of** February **20** 06

Deva C. Holt
~~April N. Byrd, Clerk~~ Deva C. Holt, Deputy Clerk
Johnston County Board of Commissioners

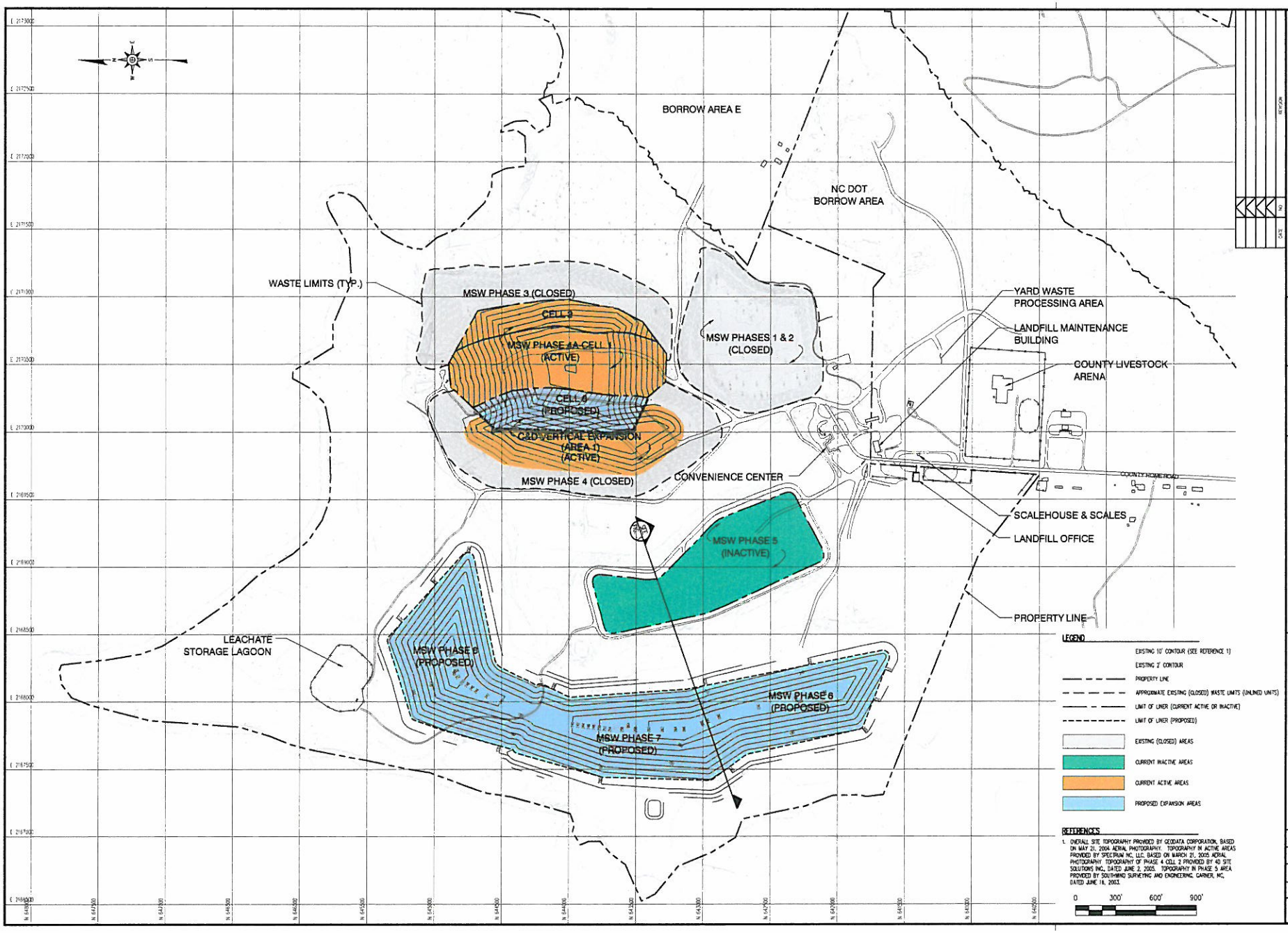
BORROW AREA E
NC DOT
BORROW AREA
WASTE LIMITS (TYP.)
MSW PHASE 3 (CLOSED)
CELL 9
MSW PHASE 4A-CELL 1
(ACTIVE)
CELL 6
(PROPOSED)
C&D VERTICAL EXPANSION
(AREA 1)
(ACTIVE)
MSW PHASE 4 (CLOSED)
MSW PHASES 1 & 2
(CLOSED)
CONVENIENCE CENTER
YARD WASTE
PROCESSING AREA
LANDFILL MAINTENANCE
BUILDING
COUNTY LIVESTOCK
ARENA
COUNTY HOME ROAD
SCALEHOUSE & SCALES
LANDFILL OFFICE
MSW PHASE 5
(INACTIVE)
PROPERTY LINE
LEACHATE
STORAGE LAGOON
MSW PHASE 8
(PROPOSED)
MSW PHASE 6
(PROPOSED)
MSW PHASE 7
(PROPOSED)
LEGEND
EXISTING 10' CONTOUR (SEE REFERENCE 1)
EXISTING 2' CONTOUR
PROPERTY LINE
APPROXIMATE EXISTING (CLOSED) WASTE LIMITS (UNLINED UNITS)
LIMIT OF LINER (CURRENT ACTIVE OR INACTIVE)
LIMIT OF LINER (PROPOSED)
EXISTING (CLOSED) AREAS
CURRENT INACTIVE AREAS
CURRENT ACTIVE AREAS
PROPOSED EXPANSION AREAS
REFERENCES
1. OVERALL SITE TOPOGRAPHY PROVIDED BY GEODATA CORPORATION, BASED ON MAY 21, 2004 AERIAL PHOTOGRAPHY. TOPOGRAPHY IN ACTIVE AREAS PROVIDED BY SPECTRUM INC, LLC. BASED ON MARCH 21, 2005 AERIAL PHOTOGRAPHY. TOPOGRAPHY OF PHASE 4 CELL 2 PROVIDED BY 4D SITE SOLUTIONS INC, DATED JUNE 2, 2005. TOPOGRAPHY IN PHASE 5 AREA PROVIDED BY SOUTHWIND SURVEYING AND ENGINEERING, GARNER, NC, DATED JUNE 16, 2003.
0 300' 600' 900'
G. N. RICHARDSON & ASSOCIATES, INC.
Engineering and Geological Services
14 N. Boylan Ave.
Raleigh, N.C. 27603
ph: 919-828-0577
fax: 919-828-3899
www.gnra.com
JOHNSTON COUNTY, NORTH CAROLINA
DEPT. OF PUBLIC UTILITIES
JOHNSTON COUNTY LANDFILL
SITE DEVELOPMENT PLAN
PERMITTED FACILITY PLAN
EXISTING & PROPOSED AREAS
DESIGNED BY P.K.S.
DRAWN BY C.T.J.
CHECKED BY
PROJECT NO JOHN-22
SCALE AS SHOWN
DATE DEC 2005
FILE NAME JOHN-D003
SHEET NO
DRAWING NO FIG. 1
G:\CAD\Johnston\John-22\sheets\JOHN-D0403.dwg, 2/9/2006 5:15:13 PM

G. N. RICHARDSON & ASSOCIATES, INC.
Engineering and Geological Services
14 N. Boylan Ave.
Raleigh, N.C. 27603
ph: 919-828-0577
fax: 919-828-3899
www.gnra.com

PROJECT TITLE
JOHNSTON COUNTY, NORTH CAROLINA
DEPT. OF PUBLIC UTILITIES
JOHNSTON COUNTY LANDFILL
SITE DEVELOPMENT PLAN

DRAWING TITLE
PROPOSED FACILITY PLAN
EXISTING & PROPOSED AREAS

DESIGNED BY: P.K.S.	DRAWN BY: G.T.J.
CHECKED BY:	PROJECT NO: JOHN-22
SCALE: AS SHOWN	DATE: DEC. 2006
FILE NAME: JOHN-DD404	
SHEET NO:	DRAWING NO: FIG. 2

G:\CADD\Johnston\John-22\sheets\JOHN-DD404.dwg, 2/9/2006 5:13:58 PM

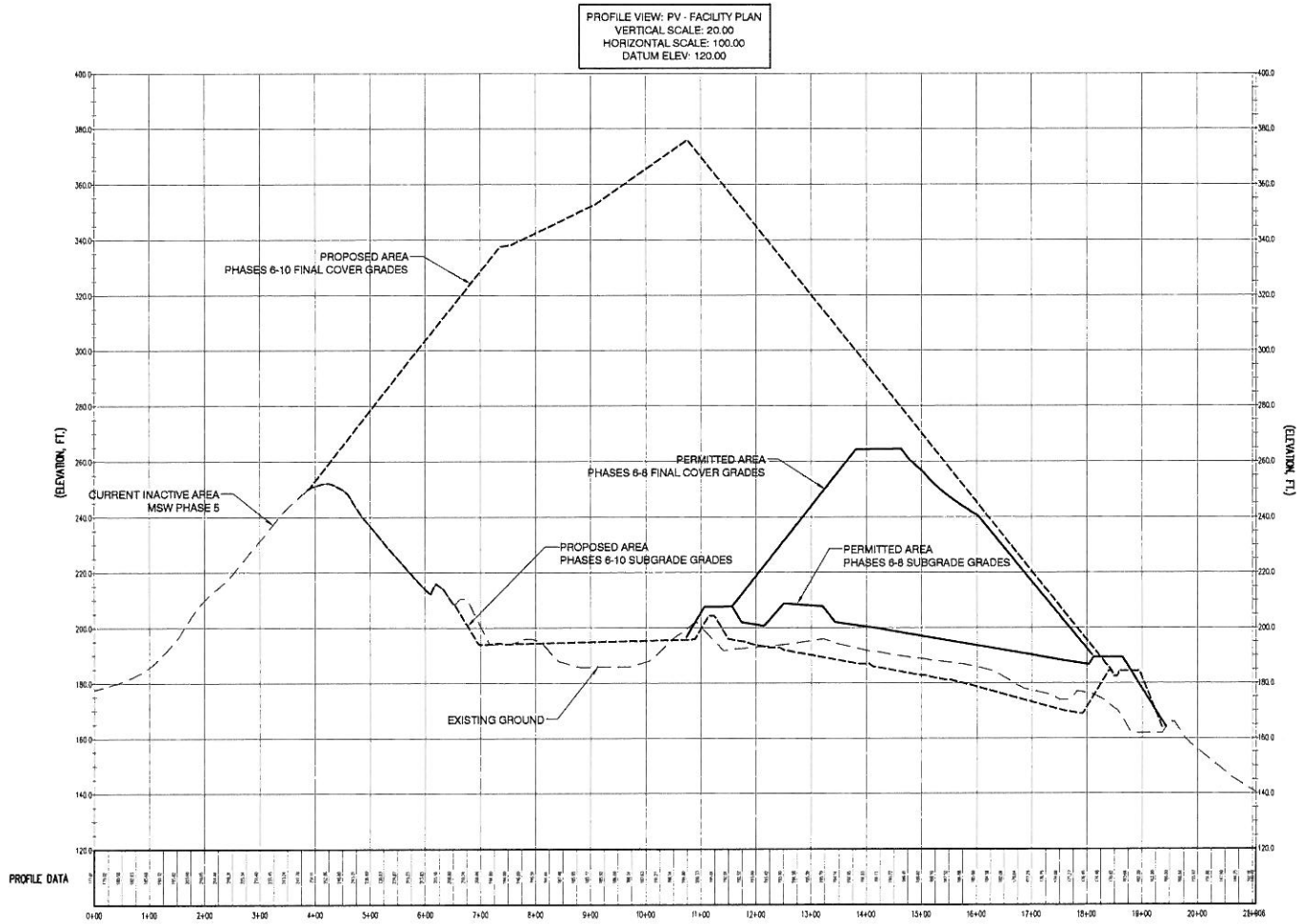

0 100' 200' 300'

60' 40' 20' 0

G. N. RICHARDSON & ASSOCIATES, INC.
Engineering and Geological Services
1414 Spring Ave.
Raleigh, N.C. 27603
ph: 919-828-0577
fax: 919-828-3899
www.gnra.com

PROJECT TITLE
JOHNSTON COUNTY, NORTH CAROLINA
DEPT. OF PUBLIC UTILITIES
JOHNSTON COUNTY LANDFILL
SITE DEVELOPMENT PLAN

DRAWING TITLE
CROSS SECTION
COMPARISON OF PERMITTED
AND PROPOSED
FACILITY PLANS

DESIGNED BY: PKS.	DRAWN BY: CTJ.
CHECKED BY:	PROJECT NO. JOHN-22
SCALE: AS SHOWN	DATE: DEC 2006
FILE NAME: JOHN-D0405	
SHEET NO.	DRAWING NO. FIG. 3

G:\CADD\johnston\John-22\sheets\JOHN-D0405.dwg 2/9/2006 5:13:12 PM

Johnston County

PLANNING & ZONING DEPARTMENT

"Here To Serve . . ."

February 01, 2006

Mr. Edward F. Mussler, P.E.
NC DENR Division of Waste Management
401 Oberlin Road, Suite 150
Raleigh, North Carolina 27605

RE: Johnston County Landfill - Permit No. 51-03
C&D Landfill - Area 2
Demonstration of Consistency with Zoning Ordinances

Dear Mr. Mussler:

In compliance with 15A NCAC 13B.500(1)(e)(ii) and 13B.1618(c)(5)(B), this letter is to notify you that the proposed Area 2 C&D landfill unit at the Johnston County Landfill is part of the currently permitted landfill site and that this site meets the applicable zoning requirements of Johnston County.

Should you have any questions or require clarification, please contact me at your earliest convenience.

Sincerely,

Johnston County Planning Director

cc: Pieter Scheer, G.N. Richardson & Associates

309 East Market Street • Smithfield, NC 27577
Telephone (919) 989-5150 • (Fax) (919) 989-5426
www.johnstonnc.com

Johnston County
DEPARTMENT OF PUBLIC UTILITIES
POST OFFICE BOX 2263
SMITHFIELD, N.C. 27577
(919) 989-5075

February 01, 2006

Mr. Edward F. Mussler, P.E.
NC DENR Division of Waste Management
1646 Mail Service Center
Raleigh, North Carolina 27699-1646

RE: Johnston County Landfill - Permit No. 51-03
C&D Landfill - Area 2
Demonstration of Consistency with Solid Waste Management Plan

Dear Mr. Mussler:

In compliance with 15A NCAC 13B.1618(c)(5)(C), this letter is to notify you that the operation of the proposed Area 2 C&D landfill unit at the Johnston County Landfill is consistent with Johnston County's approved solid waste management plan.

Should you have any questions or require clarification, please contact us at your earliest convenience.

Sincerely,

Haywood M. Phthisic, III
Assistant Director

cc: Pieter Scheer, G.N. Richardson & Associates
Timothy G. Broome, P.E.

Printed on recycled paper

JOHNSTON COUNTY, NORTH CAROLINA
DEPARTMENT OF PUBLIC UTILITIES

JOHNSTON COUNTY C&D LANDFILL
AREA 2
PERMIT DRAWINGS

OCTOBER 2005
REVISED: MARCH 2006

SHEET NO.	DRAWING NO.	DRAWING TITLE	REVISION NO.
1	–	TITLE–COVER SHEET	1
2	S1	EXISTING SITE CONDITIONS	
3	S2	SITE DEVELOPMENT PLAN – BASE GRADES	1
4	S3	SITE DEVELOPMENT PLAN – FINAL COVER GRADES	1
5	S4	AREA 2 SUBGRADE GRADING AND DRAINAGE PLAN	1
6	S5	AREA 2 COMPOSITE LINER GRADING AND LEACHATE COLLECTION SYSTEM	1
7	S6	AREA 2 PROTECTIVE COVER GRADING PLAN	1
8	S7	LEACHATE FORCEMAIN PLAN & PROFILE	1
9	L1	LINER AND BERM DETAILS (SHEET 1 OF 2)	
10	L2	LINER & BERM DETAILS (SHEET 2 OF 2)	
11	LM1	LEACHATE MANAGEMENT SYSTEM DETAILS (SHEET 1 OF 3)	
12	LM2	LEACHATE MANAGEMENT SYSTEM DETAILS (SHEET 2 OF 3)	1
13	LM3	LEACHATE MANAGEMENT SYSTEM DETAILS (SHEET 3 OF 3)	
14	R1	ROADWAY DETAILS	
15	EC1	EROSION & SEDIMENTATION CONTROL DETAILS (SHEET 1 OF 2)	1
16	EC2	EROSION & SEDIMENTATION CONTROL DETAILS (SHEET 2 OF 2)	
17	FC1	AREA 2 FINAL COVER GRADING AND DRAINAGE PLAN	1
18	FC2	FINAL COVER DETAILS (SHEET 1 OF 2)	
19	FC3	FINAL COVER DETAILS (SHEET 2 OF 2)	
20	LFG1	LANDFILL GAS MANAGEMENT DETAILS	
21	X1	AREA 2 – ENGINEERING CROSS SECTION (1 OF 2)	1
22	X2	AREA 2 – ENGINEERING CROSS SECTION (2 OF 2)	1
23	P1	C&D LANDFILL PHASING PLAN	1
24	P2	MSW LANDFILL PHASING PLAN (SHEET 1 OF 2)	
25	P3	MSW LANDFILL PHASING PLAN (SHEET 2 OF 2)	

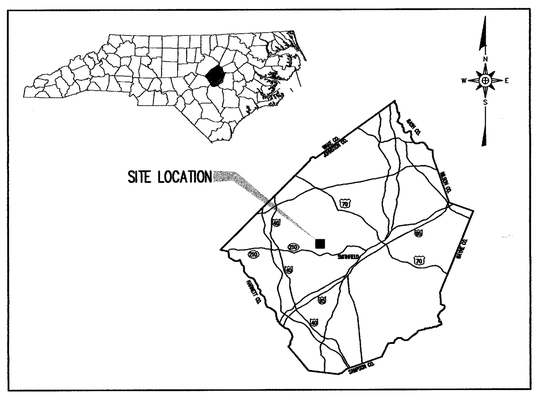

VICINITY MAP
NOT TO SCALE

G. N. RICHARDSON & ASSOCIATES, INC.
Engineering and Geological Services
14 N. Boylan Ave.
Raleigh, N.C. 27603
www.gnra.com
ph: 919-828-0577
fax: 919-828-3899

SEAL 021686 ENGINEER PIETER K. SCHEER 4/4/06

DATE	NO.	REVISION
3/06	1	SHEET SET REVISION NO. 1 (REFER TO REVISED DRAWINGS)

FILE NAME
JOHN–D0354

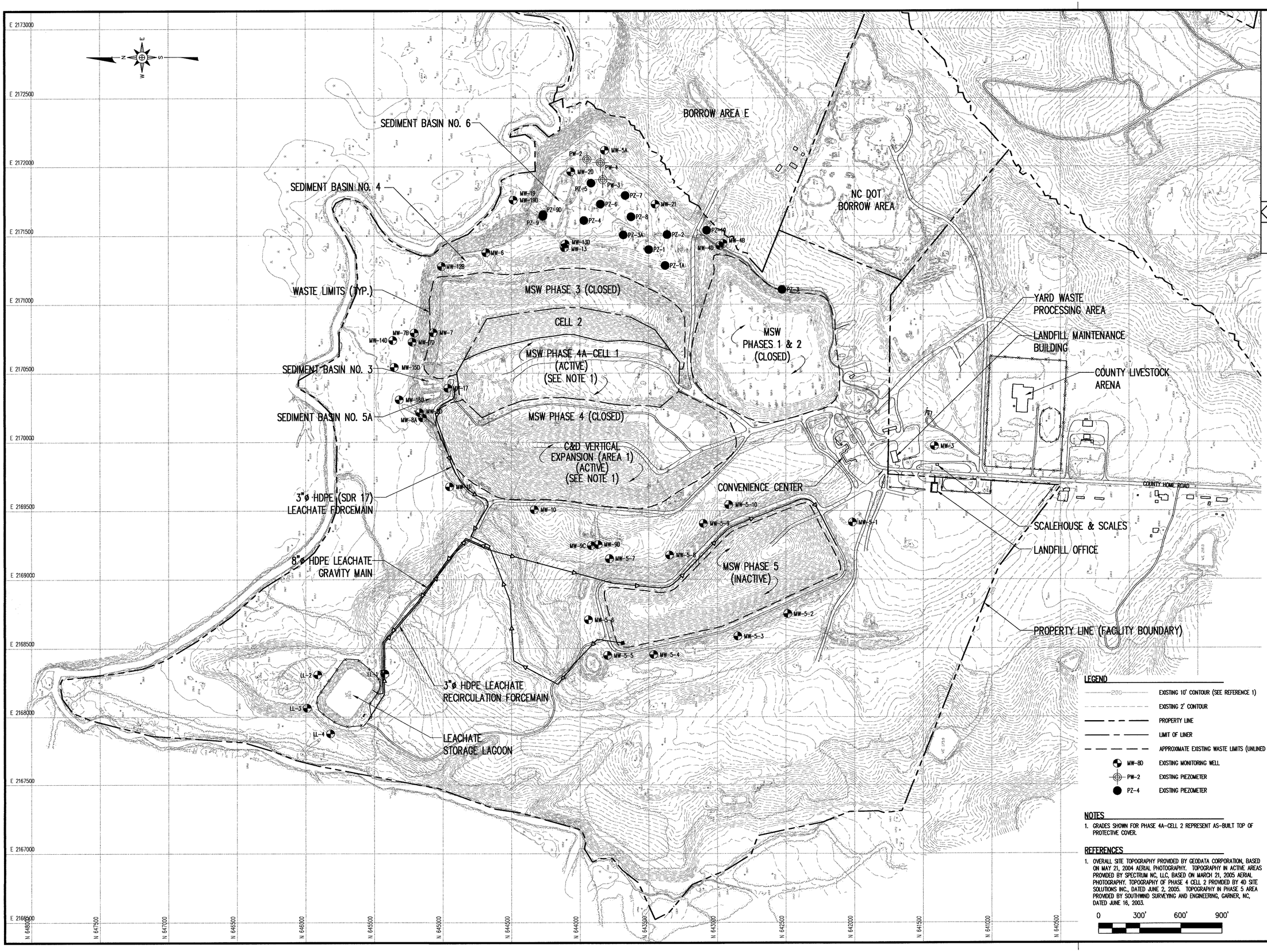

LEGEND

200	EXISTING 10' CONTOUR (SEE REFERENCE 1)
	EXISTING 2' CONTOUR
	PROPERTY LINE
	LIMIT OF LINER
	APPROXIMATE EXISTING WASTE LIMITS (UNLINED UNITS)
MW-8D	EXISTING MONITORING WELL
PW-2	EXISTING PIEZOMETER
PZ-4	EXISTING PIEZOMETER

NOTES

1. GRADES SHOWN FOR PHASE 4A-CELL 2 REPRESENT AS-BUILT TOP OF PROTECTIVE COVER.

REFERENCES

1. OVERALL SITE TOPOGRAPHY PROVIDED BY GEODATA CORPORATION, BASED ON MAY 21, 2004 AERIAL PHOTOGRAPHY. TOPOGRAPHY IN ACTIVE AREAS PROVIDED BY SPECTRUM NC, LLC, BASED ON MARCH 21, 2005 AERIAL PHOTOGRAPHY. TOPOGRAPHY OF PHASE 4 CELL 2 PROVIDED BY 4D SITE SOLUTIONS INC., DATED JUNE 2, 2005. TOPOGRAPHY IN PHASE 5 AREA PROVIDED BY SOUTHWIND SURVEYING AND ENGINEERING, GARNER, NC, DATED JUNE 16, 2003.

0 300' 600' 900'

REVISION	NO.	DATE

G. N. RICHARDSON & ASSOCIATES, INC.
Engineering and Geological Services
14 N. Boylan Ave.
Raleigh, N.C. 27603
ph: 919-828-0577
fax: 919-828-3899
www.gnra.com

SEAL

SEAL 021668 ENGINEER PIETER K. SCHUIL

PROJECT TITLE: JOHNSTON COUNTY C&D LANDFILL AREA 2 PERMIT DRAWINGS

DRAWING TITLE: EXISTING SITE CONDITIONS

DESIGNED BY: P.K.S.	DRAWN BY: J.A.L.
CHECKED BY:	PROJECT NO.: JOHN-22
SCALE: AS SHOWN	DATE: OCT. 2005
FILE NAME: JOHN-D0356	
SHEET NO. 2	DRAWING NO. S1

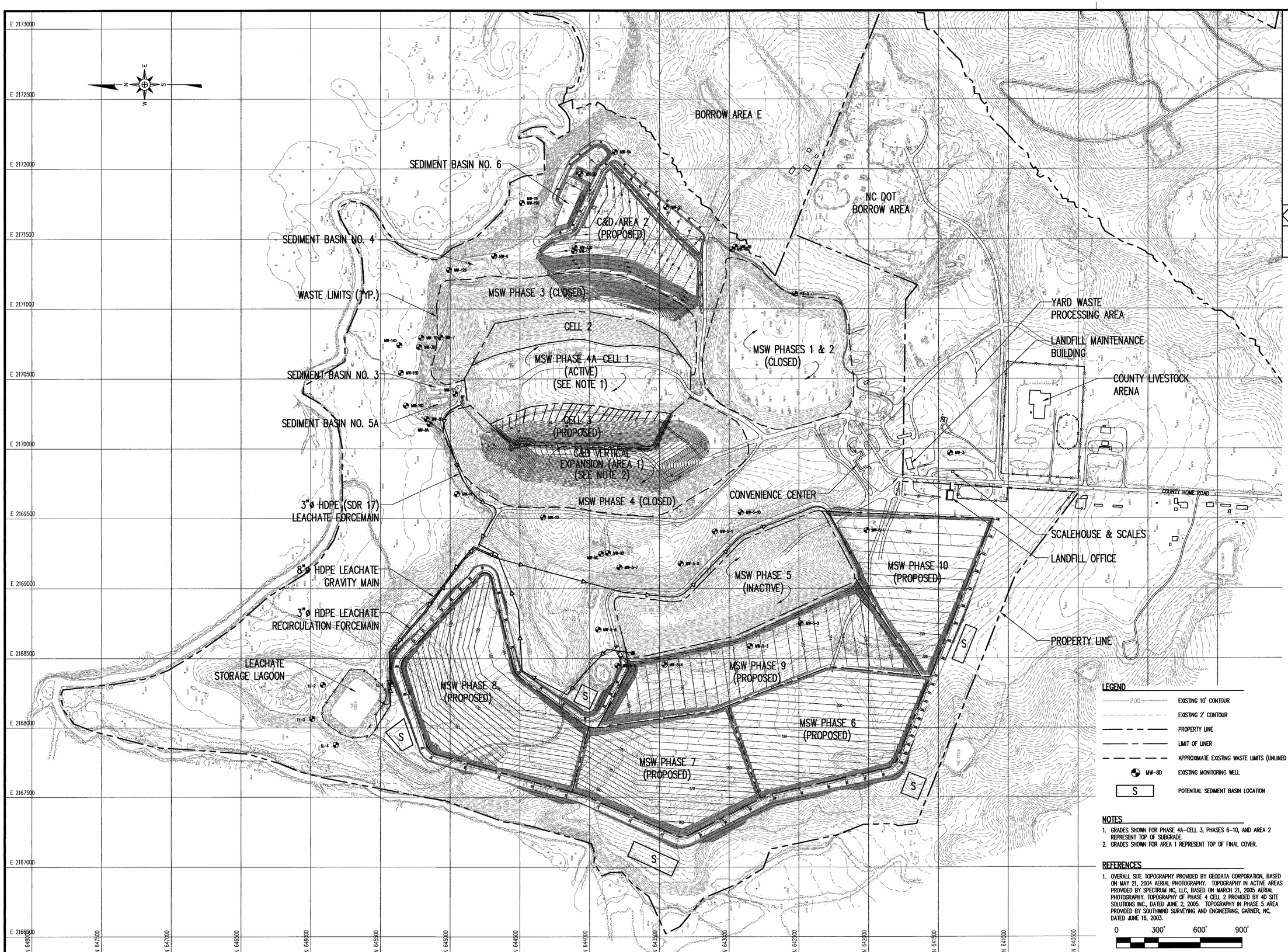

LEGEND

200	EXISTING 10' CONTOUR
	EXISTING 2' CONTOUR
	PROPERTY LINE
	LIMIT OF LINER
	APPROXIMATE EXISTING WASTE LIMITS (UNLINED UNITS)
MW-8D	EXISTING MONITORING WELL
S	POTENTIAL SEDIMENT BASIN LOCATION

NOTES

1. GRADES SHOWN FOR PHASE 4A-CELL 3, PHASES 6-10, AND AREA 2 REPRESENT TOP OF SUBGRADE.
2. GRADES SHOWN FOR AREA 1 REPRESENT TOP OF FINAL COVER.

REFERENCES

1. OVERALL SITE TOPOGRAPHY PROVIDED BY GEODATA CORPORATION, BASED ON MAY 21, 2004 AERIAL PHOTOGRAPHY. TOPOGRAPHY IN ACTIVE AREAS PROVIDED BY SPECTRUM NC, LLC, BASED ON MARCH 21, 2005 AERIAL PHOTOGRAPHY. TOPOGRAPHY OF PHASE 4 CELL 2 PROVIDED BY 4D SITE SOLUTIONS INC., DATED JUNE 2, 2005. TOPOGRAPHY IN PHASE 5 AREA PROVIDED BY SOUTHWIND SURVEYING AND ENGINEERING, GARNER, NC, DATED JUNE 16, 2003.

0 300' 600' 900'

NO.	DATE	REVISION
1	3/06	REVISED AREA 2 BASE GRADES

G. N. RICHARDSON & ASSOCIATES, INC.
Engineering and Geological Services
14 N. Boylan Ave.
Raleigh, N.C. 27603
ph: 919-828-0577
fax: 919-828-3899
www.gnra.com

SEAL

SEAL

PROJECT TITLE: JOHNSTON COUNTY C&D LANDFILL AREA 2 PERMIT DRAWINGS

DRAWING TITLE: SITE DEVELOPMENT PLAN BASE GRADES (MSW AND C&D UNITS)

DESIGNED BY: P.K.S.	DRAWN BY: J.A.L.
CHECKED BY:	PROJECT NO.: JOHN-22
SCALE: AS SHOWN	DATE: OCT. 2005
FILE NAME: JOHN-D0366A	
SHEET NO. 3	DRAWING NO. S2

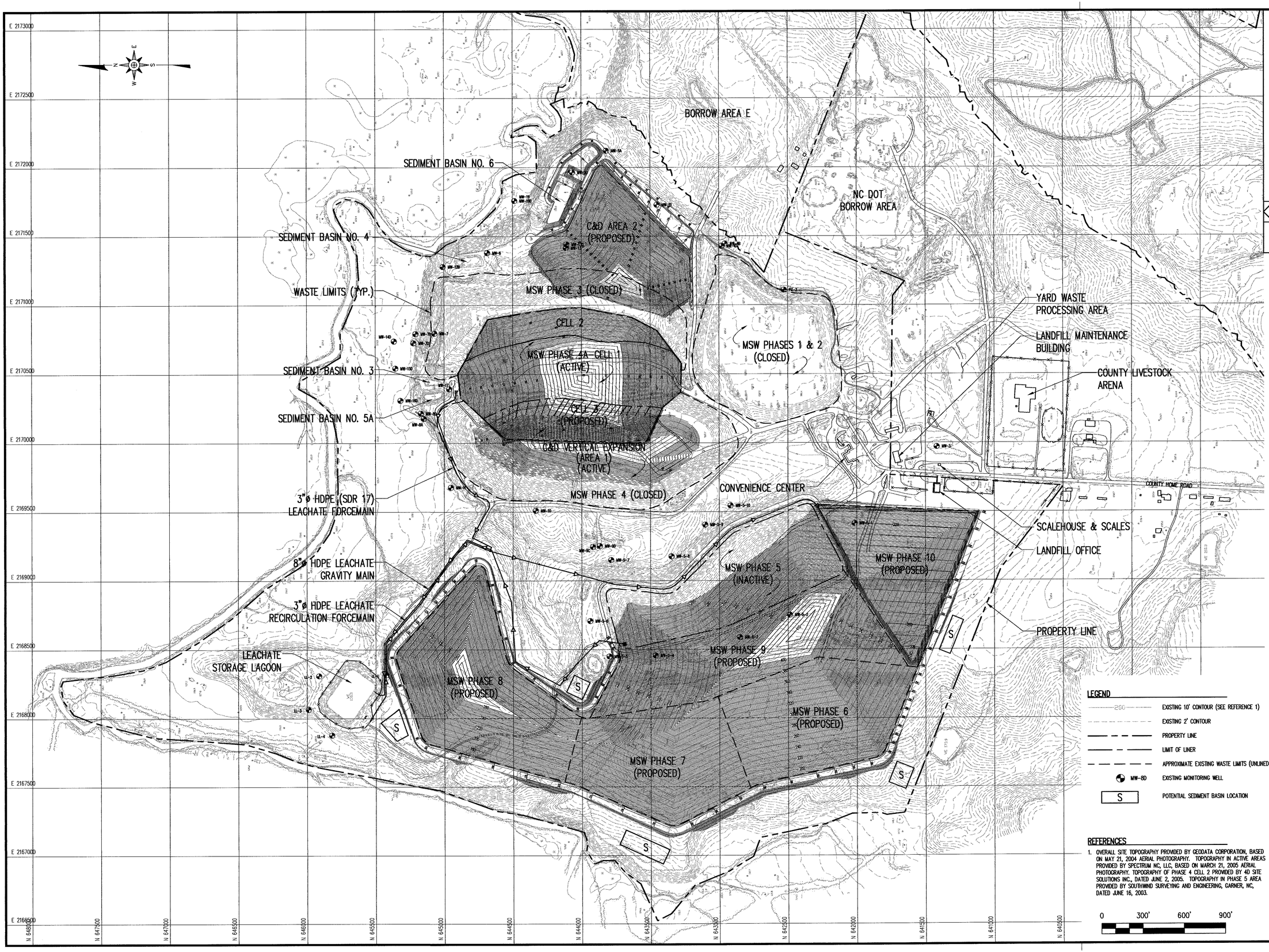

LEGEND

200	EXISTING 10' CONTOUR (SEE REFERENCE 1)
	EXISTING 2' CONTOUR
	PROPERTY LINE
	LIMIT OF LINER
	APPROXIMATE EXISTING WASTE LIMITS (UNLINED UNITS)
MW-8D	EXISTING MONITORING WELL
S	POTENTIAL SEDIMENT BASIN LOCATION

REFERENCES

1. OVERALL SITE TOPOGRAPHY PROVIDED BY GEODATA CORPORATION, BASED ON MAY 21, 2004 AERIAL PHOTOGRAPHY. TOPOGRAPHY IN ACTIVE AREAS PROVIDED BY SPECTRUM NC, LLC, BASED ON MARCH 21, 2005 AERIAL PHOTOGRAPHY. TOPOGRAPHY OF PHASE 4 CELL 2 PROVIDED BY 4D SITE SOLUTIONS INC., DATED JUNE 2, 2005. TOPOGRAPHY IN PHASE 5 AREA PROVIDED BY SOUTHWIND SURVEYING AND ENGINEERING, GARNER, NC, DATED JUNE 16, 2003.

0 300' 600' 900'

NO.	DATE	REVISION
1	3/06	REVISED AREA 2 BASE GRADES

G. N. RICHARDSON & ASSOCIATES, INC.
Engineering and Geological Services
14 N. Boylan Ave.
Raleigh, N.C. 27603
ph: 919-828-0577
fax: 919-828-3899
www.gnra.com

SEAL

SEAL 021668 ENGINEER PETER K. SCHAFF 3/14/06

PROJECT TITLE: JOHNSTON COUNTY C&D LANDFILL AREA 2 PERMIT DRAWINGS

DRAWING TITLE: SITE DEVELOPMENT PLAN FINAL COVER GRADES (MSW AND C&D UNITS)

DESIGNED BY: P.K.S.	DRAWN BY: J.A.L.
CHECKED BY:	PROJECT NO.: JOHN-22
SCALE: AS SHOWN	DATE: OCT. 2005
FILE NAME: JOHN-D0367A	
SHEET NO. 4	DRAWING NO. S3

G:\CADD\Johnston\John22\dwg\FS311\Grading\John-D0367A.dwg, 8/8/2006 12:10:49 PM

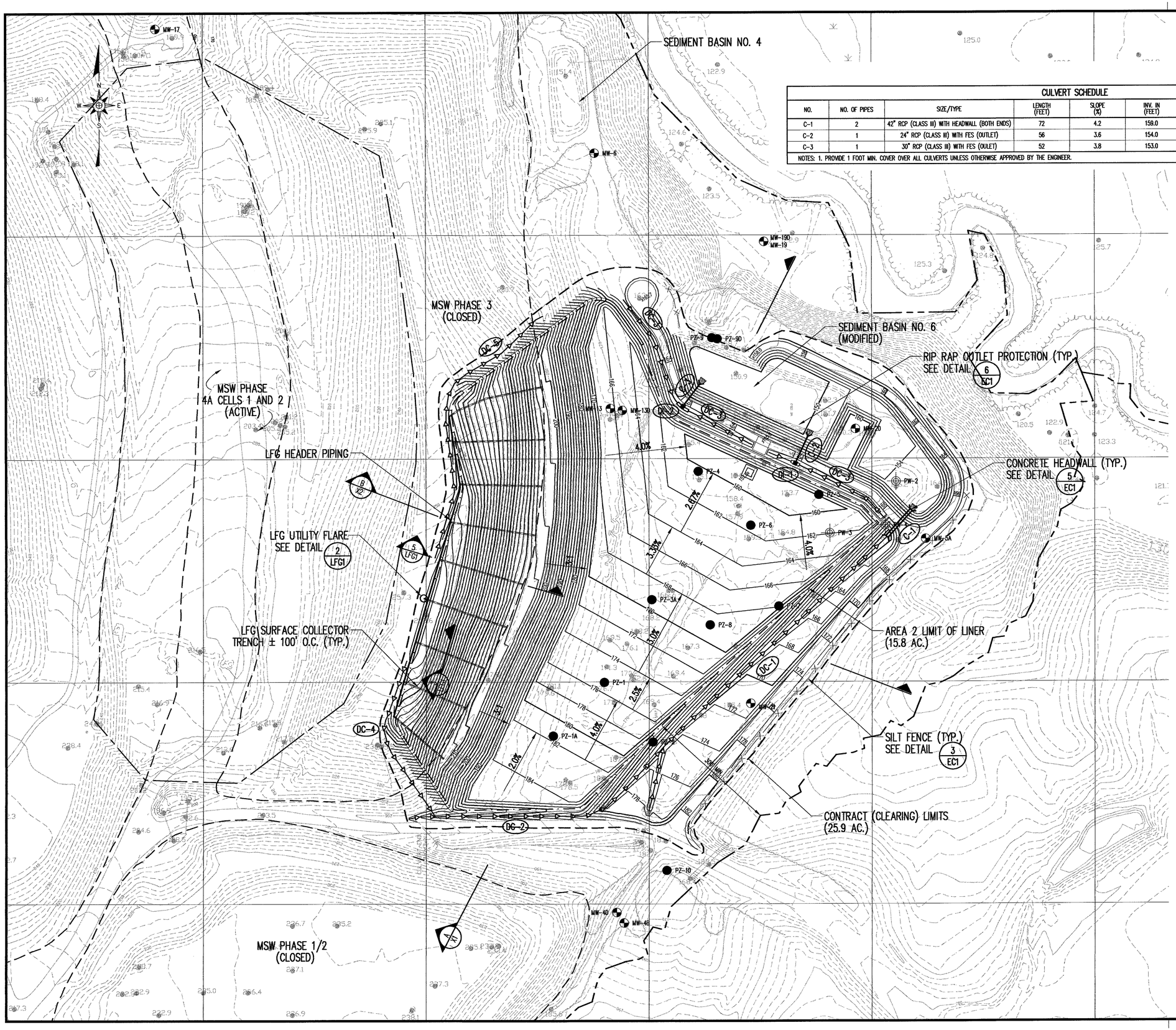

CULVERT SCHEDULE							
NO.	NO. OF PIPES	SIZE/TYPE	LENGTH (FEET)	SLOPE (%)	INV. IN (FEET)	INV. OUT (FEET)	REMARKS
C-1	2	42" RCP (CLASS III) WITH HEADWALL (BOTH ENDS)	72	4.2	159.0	156.0	---
C-2	1	24" RCP (CLASS III) WITH FES (OUTLET)	56	3.6	154.0	152.0	INLET IN DI-1
C-3	1	30" RCP (CLASS III) WITH FES (OULET)	52	3.8	153.0	151.0	INLET IN DI-2

NOTES: 1. PROVIDE 1 FOOT MIN. COVER OVER ALL CULVERTS UNLESS OTHERWISE APPROVED BY THE ENGINEER.

LEGEND

- 200 — EXISTING 10' CONTOUR
- EXISTING 2' CONTOUR
- 150 — PROPOSED 10' CONTOUR
- PROPOSED 2' CONTOUR
- PROPERTY LINE
- AREA 2 LIMIT OF LINER
- APPROXIMATE EXISTING WASTE LIMITS (UNLINED UNITS)
- MW-8D — EXISTING MONITORING WELL
- PW-2 — EXISTING PIEZOMETER
- PZ-4 — EXISTING PIEZOMETER
- LFG SURFACE COLLECTOR TRENCH/ PERFORATED PIPING
- SOLID PIPING
- LFG UTILITY FLARE
- SILT FENCE
- DC-1 — DRAINAGE CHANNEL
- C-1 — CULVERT NUMBER
- DI-1 — DROP INLET NUMBER

NOTES

1. CONTOURS SHOWN ON PIGGY BACK AREAS MAY VARY SOMEWHAT DUE TO SETTLEMENT OF UNDERLYING WASTE.
2. GRADES SHOWN FOR AREA 2 REPRESENT TOP OF SUBGRADE.

REFERENCES

1. OVERALL SITE TOPOGRAPHY PROVIDED BY GEODATA CORPORATION, BASED ON MAY 21, 2004 AERIAL PHOTOGRAPHY. TOPOGRAPHY IN ACTIVE AREAS PROVIDED BY SPECTRUM NC, LLC, BASED ON MARCH 21, 2005 AERIAL PHOTOGRAPHY. TOPOGRAPHY OF PHASE 4 CELL 2 PROVIDED BY 4D SITE SOLUTIONS INC., DATED JUNE 2, 2005. TOPOGRAPHY IN PHASE 5 AREA PROVIDED BY SOUTHWIND SURVEYING AND ENGINEERING, GARNER, NC, DATED JUNE 16, 2003.

0 100' 200' 300'

NO.	DATE	REVISION
1	3/06	REVISED AREA 2 BASE GRADES

G. N. RICHARDSON & ASSOCIATES, INC.
Engineering and Geological Services
14 N. Boylan Ave. Raleigh, N.C. 27603
ph: 919-828-0577 fax: 919-828-3899
www.gnra.com

SEAL

NORTH CAROLINA PROFESSIONAL SEAL 021658 ENGINEER PIETER K. SCHUIL

PROJECT TITLE: JOHNSTON COUNTY C&D LANDFILL AREA 2 PERMIT DRAWINGS

DRAWING TITLE: AREA 2 SUBGRADE GRADING AND DRAINAGE PLAN

DESIGNED BY: P.K.S.	DRAWN BY: C.T.J.
CHECKED BY:	PROJECT NO.: JOHN-22
SCALE: AS SHOWN	DATE: OCT. 2005
FILE NAME: JOHN-D0382A	
SHEET NO. 5	DRAWING NO. S4

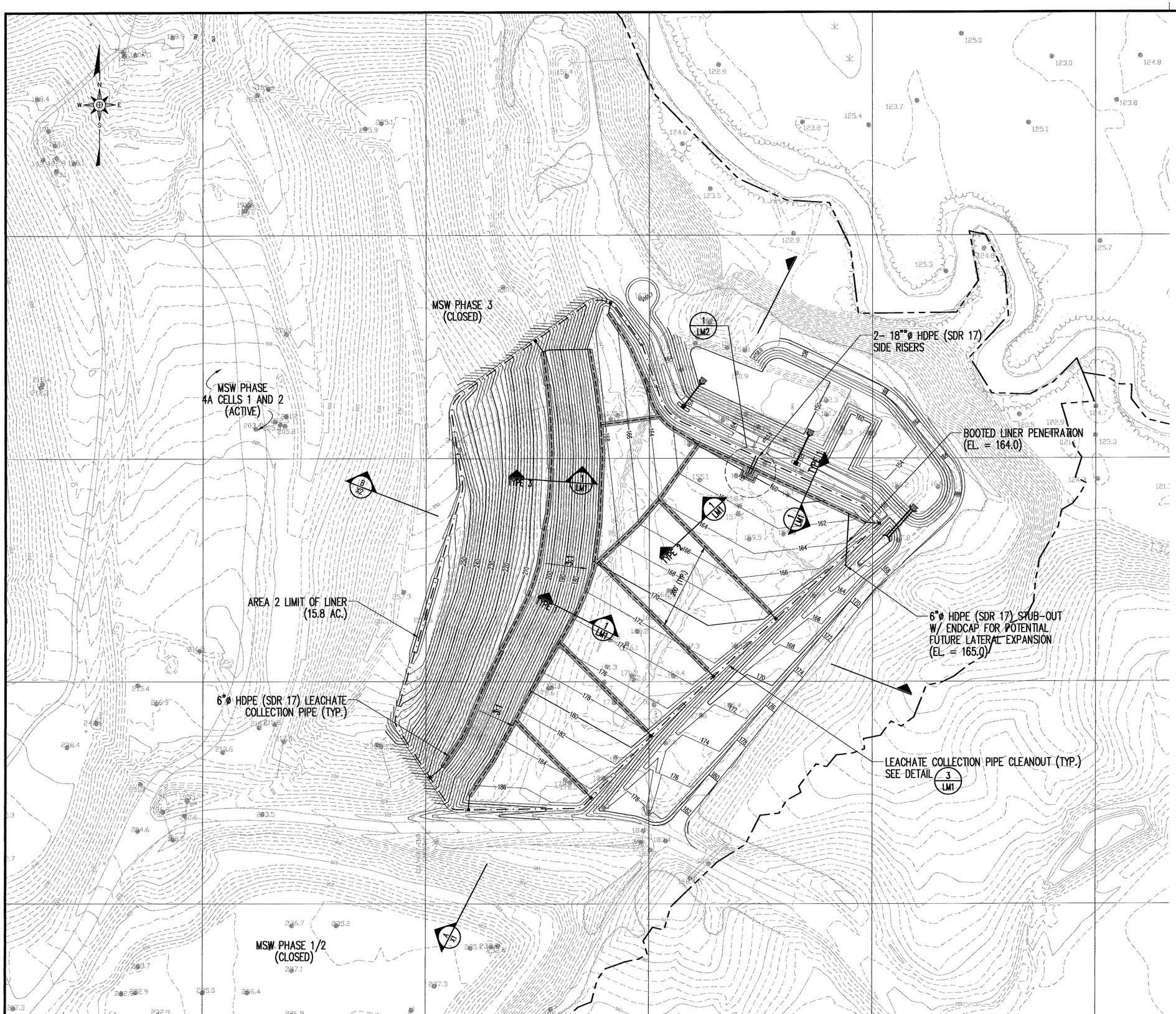

LEGEND

- 200 — EXISTING 10' CONTOUR
- EXISTING 2' CONTOUR
- 150 — PROPOSED 10' CONTOUR
- PROPOSED 2' CONTOUR
- PROPERTY LINE
- AREA 2 LIMIT OF LINER
- PERFORATED PIPING/ GRAVEL COLUMNS
- SOLID PIPING
- CLEANOUT

NOTES

1. CONTOURS SHOWN ON PIGGY BACK AREAS MAY VARY SOMEWHAT DUE TO SETTLEMENT OF UNDERLYING WASTE.
2. GRADES SHOWN FOR AREA 2 REPRESENT TOP OF COMPACTED SOIL LINER (OR STRUCTURAL FILL).
3. REFER TO DETAILS FOR PROPER TIE IN OF LINER SYSTEM AND PROTECTIVE COVER AROUND THE PERIMETER OF AREA 2.

REFERENCES

1. OVERALL SITE TOPOGRAPHY PROVIDED BY GEODATA CORPORATION, BASED ON MAY 21, 2004 AERIAL PHOTOGRAPHY. TOPOGRAPHY IN ACTIVE AREAS PROVIDED BY SPECTRUM NC, LLC, BASED ON MARCH 21, 2005 AERIAL PHOTOGRAPHY. TOPOGRAPHY OF PHASE 4 CELL 2 PROVIDED BY 4D SITE SOLUTIONS INC., DATED JUNE 2, 2005. TOPOGRAPHY IN PHASE 5 AREA PROVIDED BY SOUTHWIND SURVEYING AND ENGINEERING, GARNER, NC, DATED JUNE 16, 2003.

0 100' 200' 300'

DATE	NO.	REVISION
3/06	1	REVISED AREA 2 BASE GRADES

G. N. RICHARDSON & ASSOCIATES, INC.
Engineering and Geological Services
14 N. Boylan Ave. Raleigh, N.C. 27603
ph: 919-828-0577
fax: 919-828-3899
www.gnra.com

SEAL

SEAL

SEAL

PROJECT TITLE:
JOHNSTON COUNTY C&D LANDFILL
AREA 2
PERMIT DRAWINGS

DRAWING TITLE:
AREA 2
COMPOSITE LINER GRADING
AND LEACHATE COLLECTION
SYSTEM PLAN

DESIGNED BY: P.K.S.	DRAWN BY: C.T.J.
CHECKED BY:	PROJECT NO.: JOHN-22
SCALE: AS SHOWN	DATE: OCT. 2005
FILE NAME: JOHN-D0397A	
SHEET NO. 6	DRAWING NO. S5

C:\CATI\Johnston\John25\dwg\FKS\DEsheets\JHNLDV0397A Aug 04/2006 12:26:10 PM

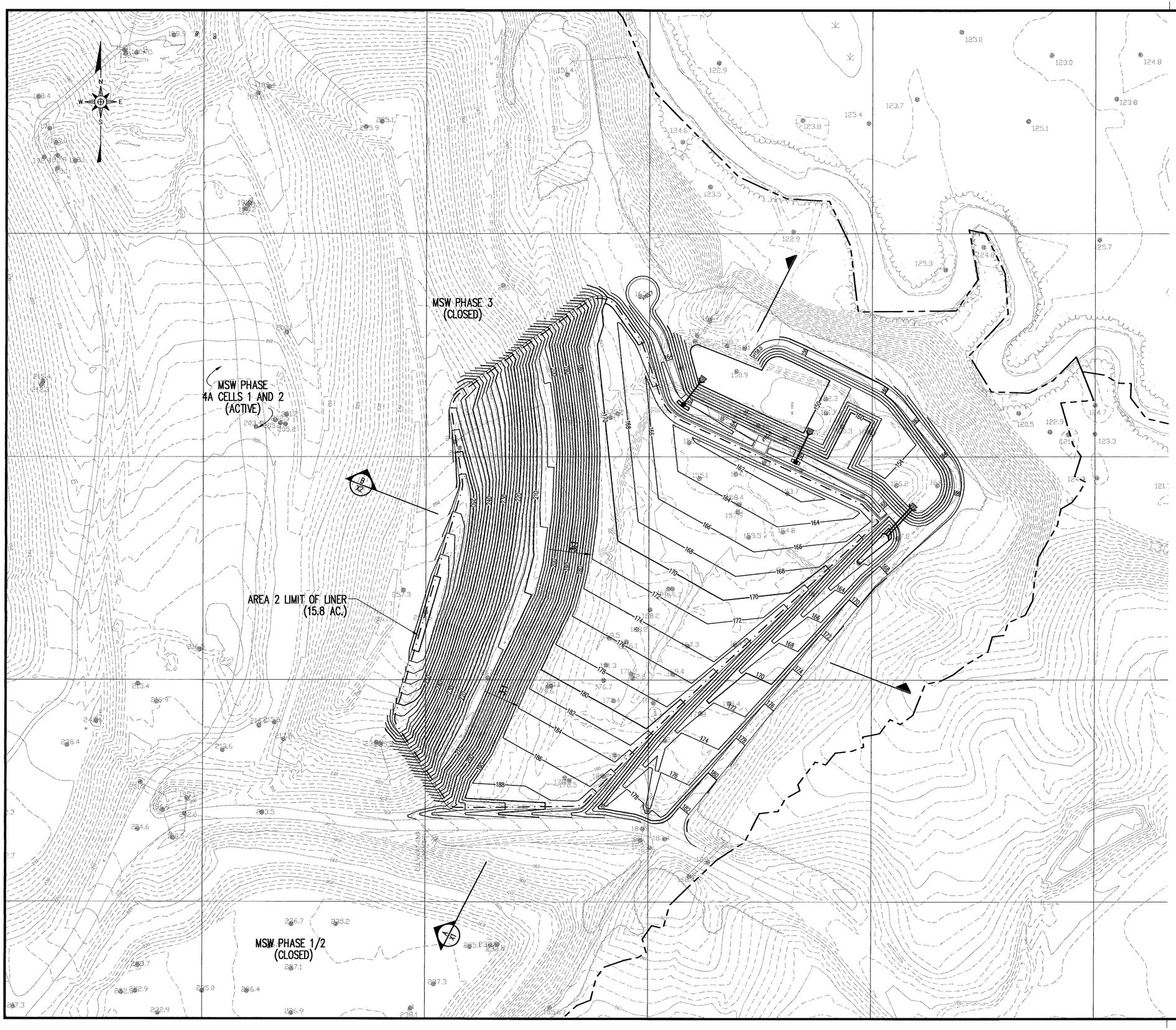

LEGEND

- 200 — EXISTING 10' CONTOUR
- EXISTING 2' CONTOUR
- 150 — PROPOSED 10' CONTOUR
- PROPOSED 2' CONTOUR
- PROPERTY LINE
- AREA 2 LIMIT OF LINER

NOTES

1. CONTOURS SHOWN ON PIGGY BACK AREAS MAY VARY SOMEWHAT DUE TO SETTLEMENT OF UNDERLYING WASTE.
2. GRADES SHOWN FOR AREA 2 REPRESENT TOP OF PROTECTIVE COVER.
3. REFER TO DETAILS FOR PROPER TIE IN OF LINER SYSTEM AND PROTECTIVE COVER AROUND THE PERIMETER OF AREA 2.

REFERENCES

1. OVERALL SITE TOPOGRAPHY PROVIDED BY GEODATA CORPORATION, BASED ON MAY 21, 2004 AERIAL PHOTOGRAPHY. TOPOGRAPHY IN ACTIVE AREAS PROVIDED BY SPECTRUM NC, LLC, BASED ON MARCH 21, 2005 AERIAL PHOTOGRAPHY. TOPOGRAPHY OF PHASE 4 CELL 2 PROVIDED BY 4D SITE SOLUTIONS INC., DATED JUNE 2, 2005. TOPOGRAPHY IN PHASE 5 AREA PROVIDED BY SOUTHWIND SURVEYING AND ENGINEERING, GARNER, NC, DATED JUNE 16, 2003.

0 100' 200' 300'

NO.	DATE	REVISION
1	3/06	REVISED AREA 2 BASE GRADES

G. N. RICHARDSON & ASSOCIATES, INC.
Engineering and Geological Services
14 N. Boylan Ave. Raleigh, N.C. 27603
ph: 919-828-0577
fax: 919-828-3899
www.gnra.com

SEAL

SEAL

PROJECT TITLE:
JOHNSTON COUNTY C&D LANDFILL
AREA 2
PERMIT DRAWINGS

DRAWING TITLE:
AREA 2
PROTECTIVE COVER
GRADING PLAN

DESIGNED BY: P.K.S.	DRAWN BY: J.A.L.
CHECKED BY:	PROJECT NO.: JOHN-22
SCALE: AS SHOWN	DATE: OCT. 2005
FILE NAME: JOHN-D0399A	
SHEET NO. 7	DRAWING NO. S6

G:\CAD\Johnston\John-22\new 03\195\sheets\JOHN-D0399A.dwg, 4/4/2006 12:03:20 PM

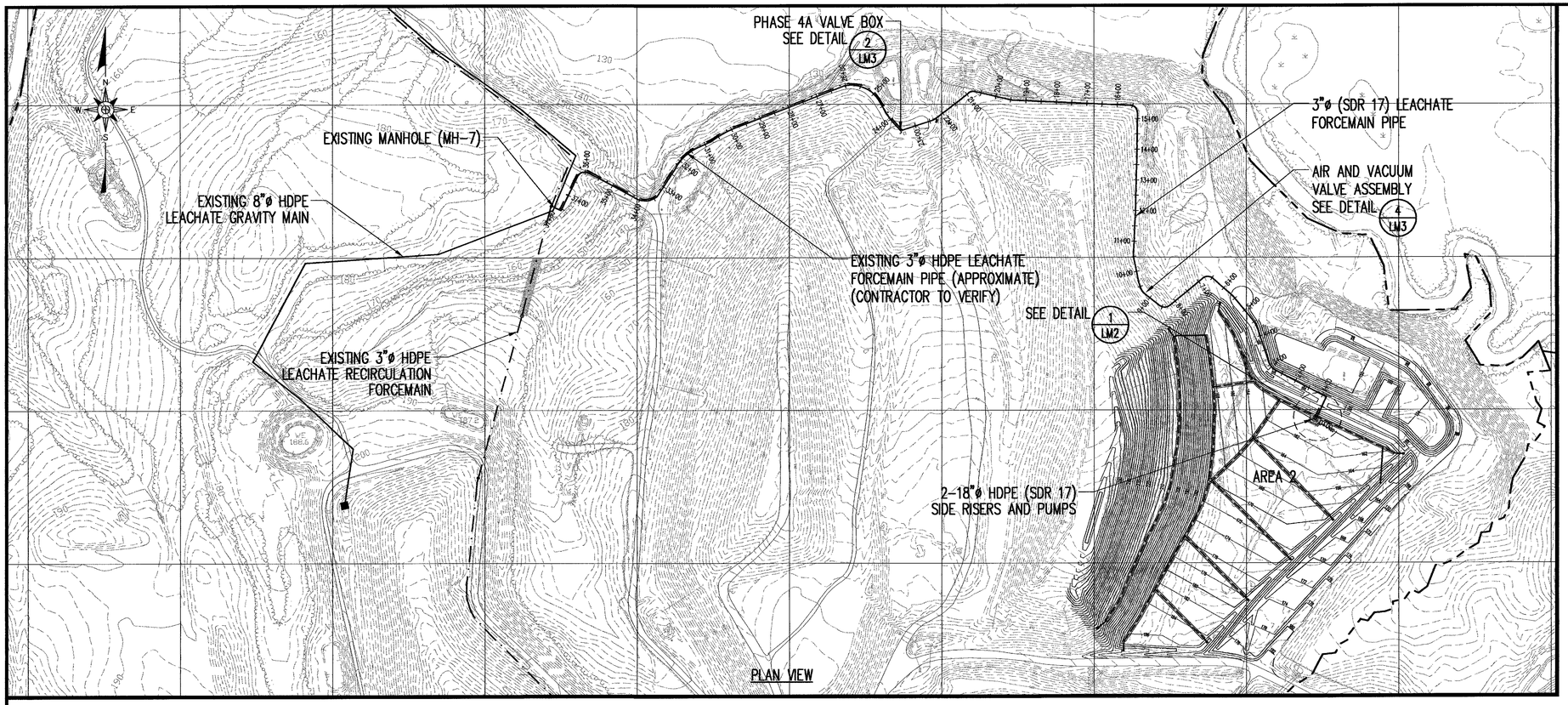

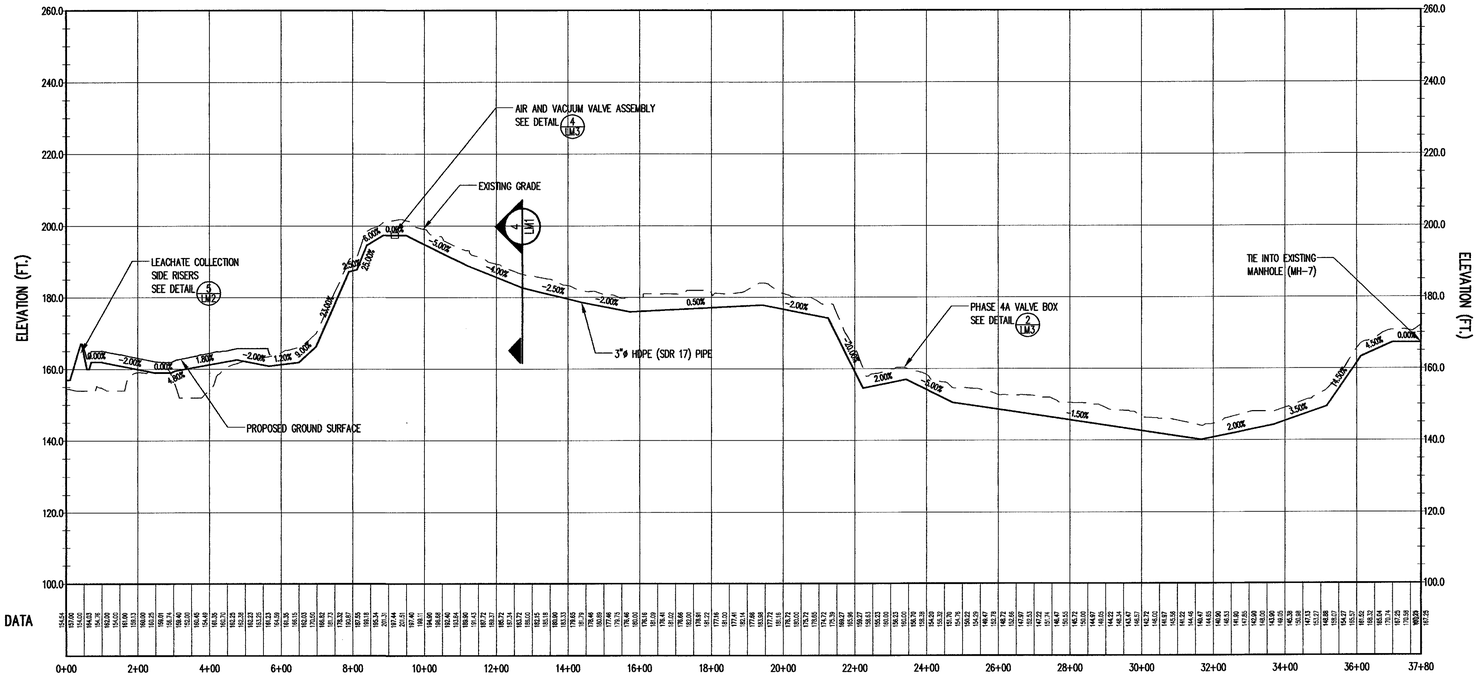

LEGEND

- EXISTING 10' CONTOUR (SEE REFERENCE 1)
- EXISTING 2' CONTOUR
- PROPERTY LINE
- PROPOSED LEACHATE FORCEMAIN
- EXISTING LEACHATE GRAVITY MAIN
- EXISTING LEACHATE FORCEMAIN

REFERENCES

1. OVERALL SITE TOPOGRAPHY PROVIDED BY GEODATA CORPORATION, BASED ON MAY 21, 2004 AERIAL PHOTOGRAPHY. TOPOGRAPHY IN ACTIVE AREAS PROVIDED BY SPECTRUM NC, LLC, BASED ON MARCH 21, 2005 AERIAL PHOTOGRAPHY. TOPOGRAPHY OF PHASE 4 CELL 2 PROVIDED BY 4D SITE SOLUTIONS INC., DATED JUNE 2, 2005. TOPOGRAPHY IN PHASE 5 AREA PROVIDED BY SOUTHWIND SURVEYING AND ENGINEERING, GARNER, NC, DATED JUNE 16, 2003.

0 200' 400' 600'

60' 40' 20' 0

0 200' 400' 600'

DATE	NO.	REVISION
3/06	1	REVISED AREA 2 BASE GRADES

G. N. RICHARDSON & ASSOCIATES, INC.
Engineering and Geological Services
14 N. Boylan Ave.
Raleigh, N.C. 27603
ph: 919-828-0577
fax: 919-828-3899
www.gnra.com

SEAL:

SEAL: NORTH CAROLINA PROFESSIONAL ENGINEER SEAL 021668 PIETER K. SCHAAL 3/31/06

PROJECT TITLE: JOHNSTON COUNTY C&D LANDFILL
AREA 2
PERMIT DRAWINGS

DRAWING TITLE: LEACHATE FORCEMAIN
PLAN & PROFILE

DESIGNED BY: P.K.S.	DRAWN BY: J.A.L.
CHECKED BY:	PROJECT NO.: JOHN-22
SCALE: AS SHOWN	DATE: OCT. 2005
FILE NAME: JOHN-D0390A	
SHEET NO. 8	DRAWING NO. S7

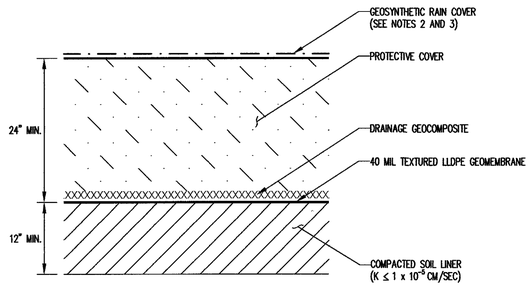

TYPE 1
(SEE NOTE 1)

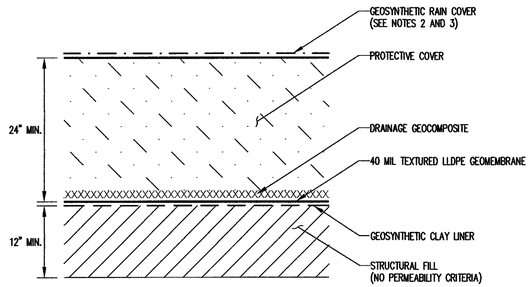

TYPE 2

NOTES:
1. THE TYPE 1 LINER SYSTEM IS ASSUMED IN THE PROJECT DETAILS.
2. THE GEOSYNTHETIC RAIN COVER IS TO BE INSTALLED AT THE OWNERS OPTION.
3. OPERATIONS:
PRIOR TO THE PLACEMENT OF WASTE, THE OWNER SHALL REMOVE ALL GEOSYNTHETIC RAIN COVER FROM THE AREA TO BE USED.

TYPICAL LINER AND LEACHATE COLLECTION SYSTEM CROSS SECTIONS

DETAIL 1/L1
SCALE: 1" = 1'

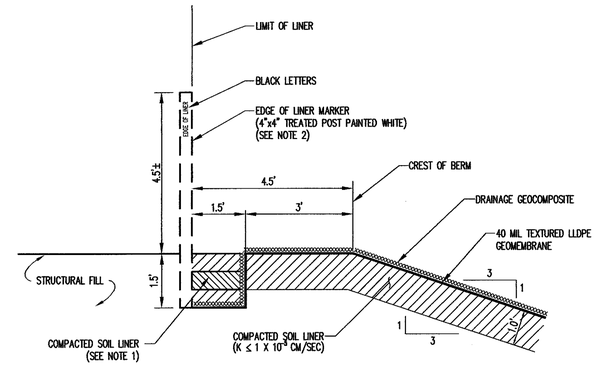

NOTES:
1. BACKFILL ANCHOR TRENCH IN 6"-DEEP LIFTS.
2. PLACE EDGE OF LINER MARKERS EVERY 100' ON-CENTER AND AT BREAK POINTS.
3. SOME LAYERS NOT SHOW FOR CLARITY.

ANCHOR TRENCH

DETAIL 3/L1
SCALE: 1" = 2'

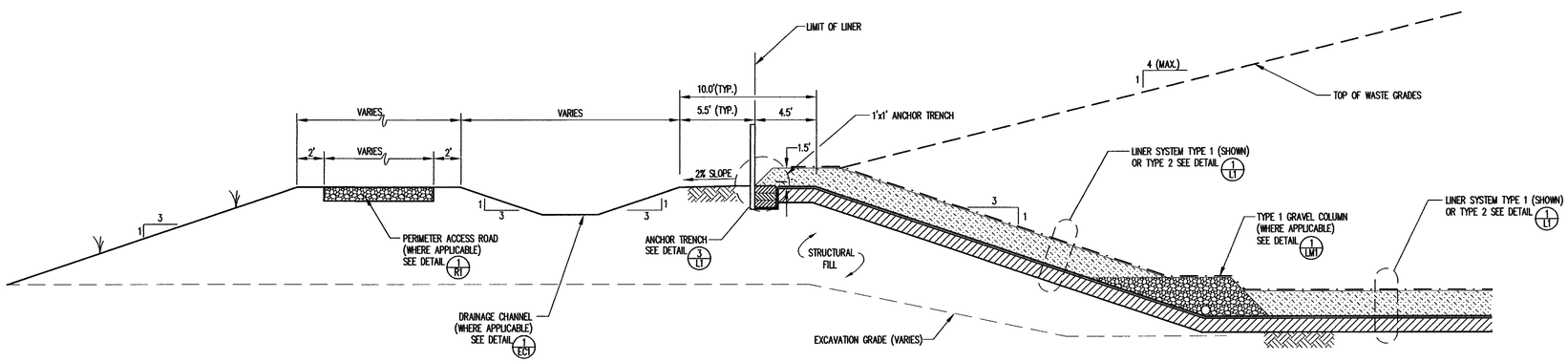

PERIMETER BERM CROSS-SECTION (TYP.)

DETAIL 2/L1
SCALE: 1" = 5'

NO.	DATE	REVISION

G. N. RICHARDSON & ASSOCIATES, INC.
Engineering and Geological Services
14 N. Boylan Ave.
Raleigh, N.C. 27603
ph: 919-828-0577
fax: 919-828-3899
www.gnra.com

SEAL

SEAL

PROJECT TITLE:
JOHNSTON COUNTY C&D LANDFILL
AREA 2
PERMIT DRAWINGS

DRAWING TITLE:
LINER AND BERM DETAILS
(SHEET 1 OF 2)

DESIGNED BY: P.K.S.	DRAWN BY: J.A.L.
CHECKED BY:	PROJECT NO.: JOHN-22
SCALE: AS SHOWN	DATE: OCT. 2005
FILE NAME JOHN-D0355	
SHEET NO. 9	DRAWING NO. L1

G:\CAD\Johnston\John-22\sheets\JOHN-D0355.dwg, 10/4/2005 5:40:42 PM

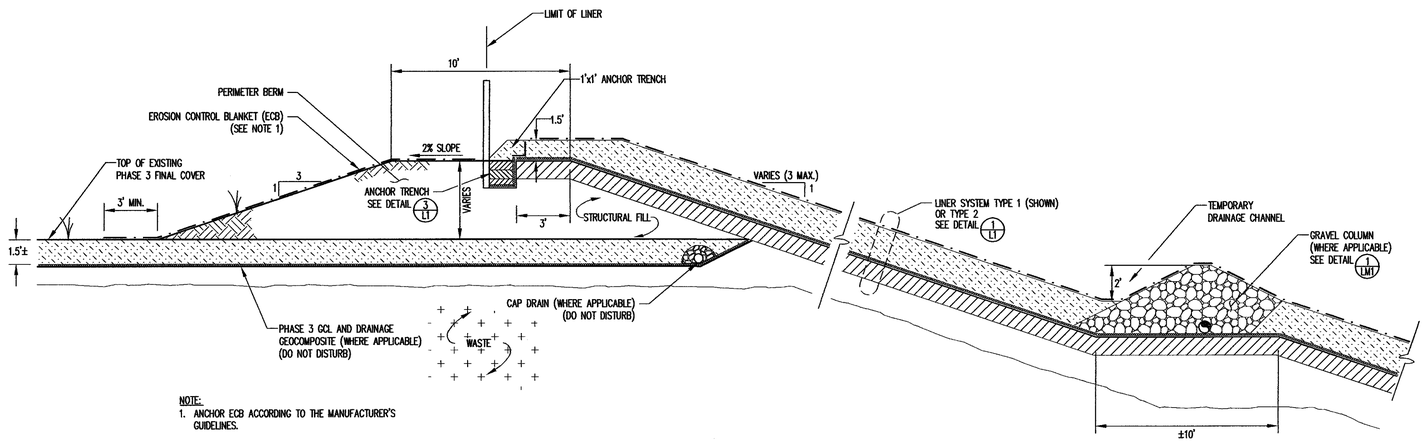

NOTE:
1. ANCHOR ECB ACCORDING TO THE MANUFACTURER'S GUIDELINES.

TYPICAL CROSS SECTION ALONG SLOPE

DETAIL 1/L2
SCALE: 1" = 4'

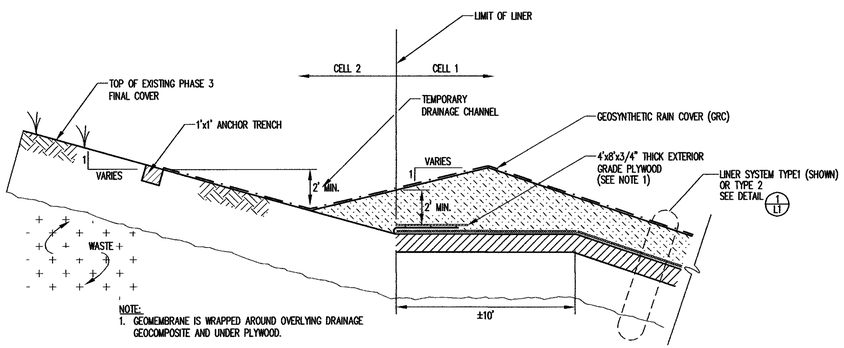

NOTE:
1. GEOMEMBRANE IS WRAPPED AROUND OVERLYING DRAINAGE GEOCOMPOSITE AND UNDER PLYWOOD.

CELL 1/ CELL 2 LINER TERMINATION

DETAIL 3/L2
SCALE: 1" = 4'

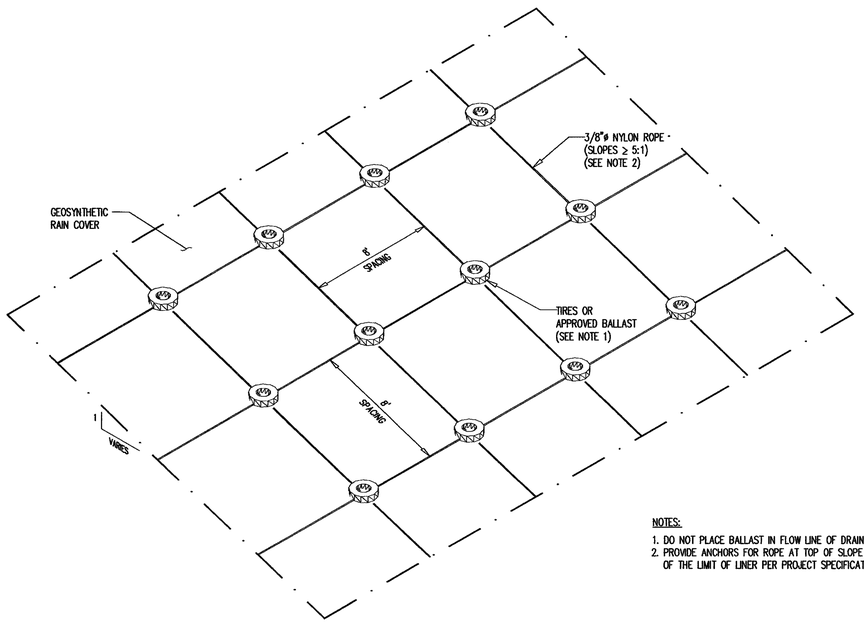

NOTES:
1. DO NOT PLACE BALLAST IN FLOW LINE OF DRAINAGE CHANNEL.
2. PROVIDE ANCHORS FOR ROPE AT TOP OF SLOPE AND OUTSIDE OF THE LIMIT OF LINER PER PROJECT SPECIFICATIONS.

ANCHORAGE OF GEOSYNTHETIC RAIN COVER

DETAIL 2/L2
NOT TO SCALE

NO.	DATE	REVISION

G. N. RICHARDSON & ASSOCIATES, INC.
Engineering and Geological Services
14 N. Boylan Ave.
Raleigh, N.C. 27603
ph: 919-828-0577
fax: 919-828-3899
www.gnra.com

SEAL

SEAL

PROJECT TITLE: JOHNSTON COUNTY C&D LANDFILL
AREA 2
PERMIT DRAWINGS

DRAWING TITLE: LINER AND BERM DETAILS
(SHEET 2 OF 2)

DESIGNED BY: P.K.S.	DRAWN BY: J.A.L.
CHECKED BY:	PROJECT NO.: JOHN-22
SCALE: AS SHOWN	DATE: OCT. 2005
FILE NAME: JOHN-D0357	
SHEET NO. 10	DRAWING NO. L2

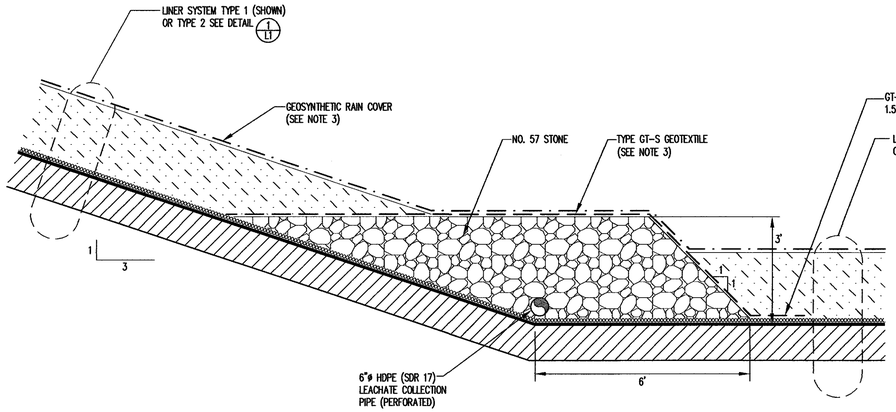

TYPE 1

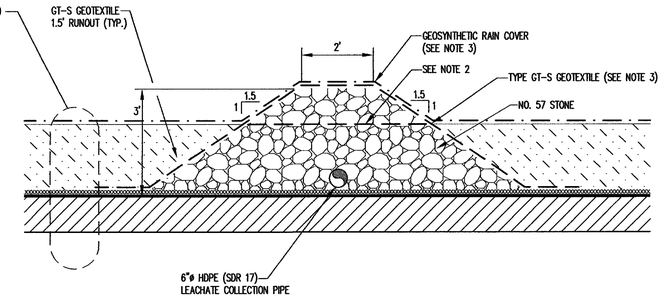

TYPE 2

NOTES:
1. SEE DETAIL 2/LM1 FOR PIPE PERFORATIONS.
2. AT THE LOW END OF TYPE 2 AND TYPE 3 GRAVEL COLUMNS, LEAVE 5 TO 10 FEET FLUSH WITH THE TOP OF PROTECTIVE COVER TO ALLOW STORM WATER TO FLOW TO THE LOW END OF THE CELL.
3. OPERATIONS:
PRIOR TO ACTIVATION OF AN AREA DRAINING TO A PARTICULAR GRAVEL COLUMN, OR PORTION THEREOF, THE OWNER SHALL REMOVE ALL GEOSYNTHETIC RAIN COVER FROM THE AREA TO BE ACTIVATED, INCLUDING FROM GRAVEL COLUMNS. SUBSEQUENTLY, THE EXPOSED TYPE GT-S GEOTEXTILE SHALL BE REMOVED PRIOR TO THE PLACEMENT OF WASTE OVER THAT PORTION OF OF THE GRAVEL COLUMN.

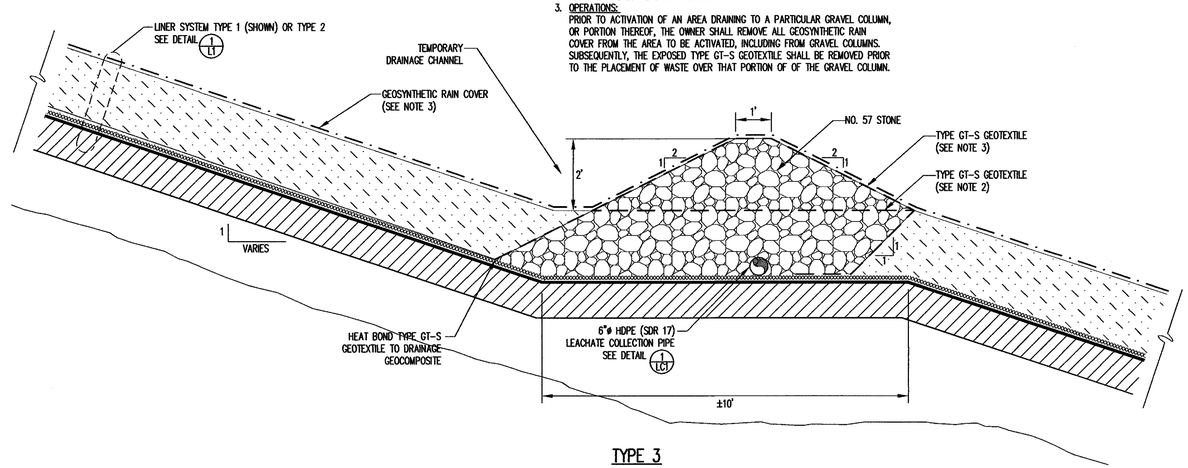

TYPE 3

GRAVEL COLUMN CROSS SECTIONS

DETAIL 1/LM1
SCALE: 1" = 2'

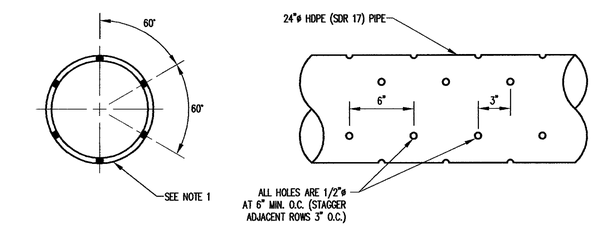

SIDE RISERS

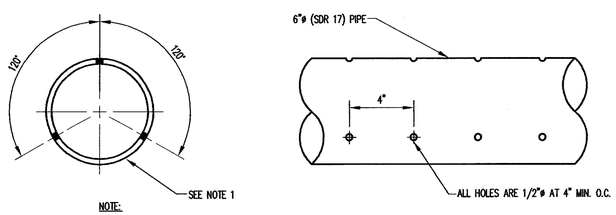

NOTE:
1. ORIENT PIPE AS SHOWN.

LEACHATE COLLECTION PIPING

HDPE PIPE PERFORATIONS

DETAIL 2/LM1
NOT TO SCALE

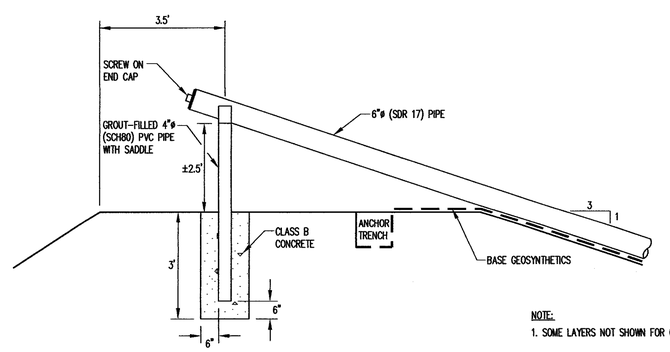

NOTE:
1. SOME LAYERS NOT SHOWN FOR CLARITY.

LEACHATE COLLECTION CLEANOUT

DETAIL 3/LM1
SCALE: 1" = 2'

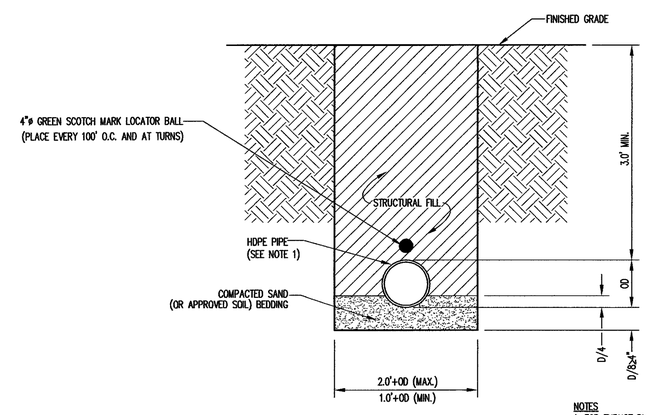

NOTES
1. FOR THRUST BLOCKING OF PRESSURE PIPE, SEE DETAIL 6/LM3

HDPE PIPE BEDDING

DETAIL 4/LM1
1" = 1.0'

REVISION	DATE	NO.

G. N. RICHARDSON & ASSOCIATES, INC.
Engineering and Geological Services
14 N. Boylan Ave. Raleigh, N.C. 27603
ph: 919-828-0577
fax: 919-828-3899
www.gnra.com

SEAL

SEAL
PROFESSIONAL ENGINEER SEAL 021066 PIETER K. SCHUIL 12/15/05

PROJECT TITLE: JOHNSTON COUNTY C&D LANDFILL AREA 2 PERMIT DRAWINGS

DRAWING TITLE: LEACHATE MANAGEMENT SYSTEM DETAILS (SHEET 1 OF 3)

DESIGNED BY: P.K.S.	DRAWN BY: J.A.L.
CHECKED BY:	PROJECT NO.: JOHN-22
SCALE: AS SHOWN	DATE: OCT. 2005
FILE NAME: JOHN-D0372	
SHEET NO. 11	DRAWING NO. LM1

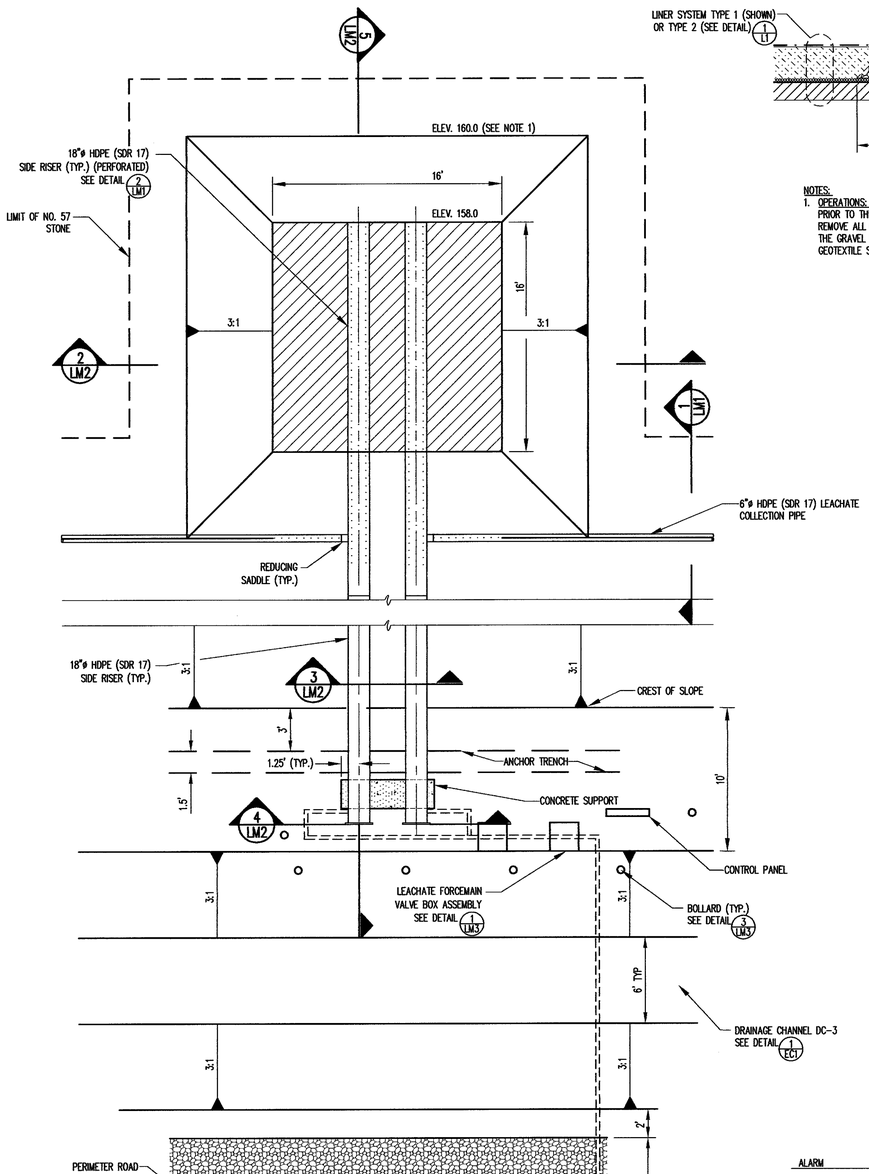

TYPICAL LEACHATE SUMP/ CLEANOUT – PLAN VIEW

DETAIL 1/LM2 SCALE: 1"= 5'

NOTES:
1. ELEVATIONS SHOWN REPRESENT TOP OF COMPACTED SOIL LINER (OR STRUCTURAL FILL).
2. PUMP CONTOLS TO BE PLACED AS DIRECTED BY OWNER.

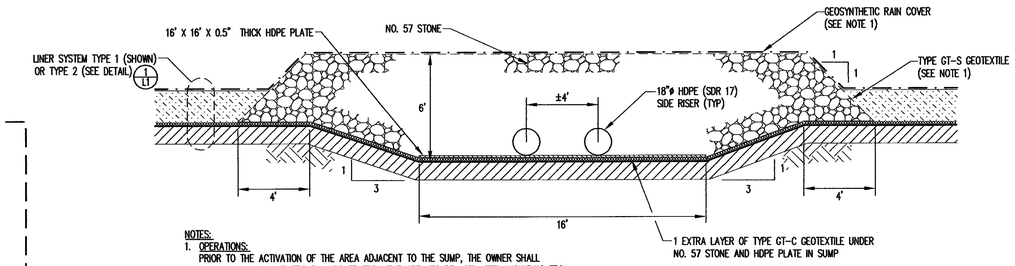

NOTES:
1. OPERATIONS:
PRIOR TO THE ACTIVATION OF THE AREA ADJACENT TO THE SUMP, THE OWNER SHALL REMOVE ALL GEOSYNTHETIC RAIN COVER FROM THE AREA TO BE ACTIVATED, INCLUDING FROM THE GRAVEL LAYER OVERLYING THE SUMP. SUBSEQUENTLY, THE EXPOSED TYPE GT-S GEOTEXTILE SHALL BE REMOVED PRIOR TO THE PLACEMENT OF WASTE OVER THE SUMP.

LEACHATE SUMP – TYPICAL CROSS SECTION

DETAIL 2/LM2 SCALE: 1"= 4'

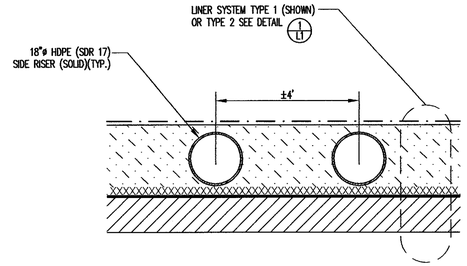

LEACHATE SUMP – TYPICAL CROSS SECTION OF SIDE RISER PIPES ON SLOPE

DETAIL 3/LM2 SCALE: 1"= 2'

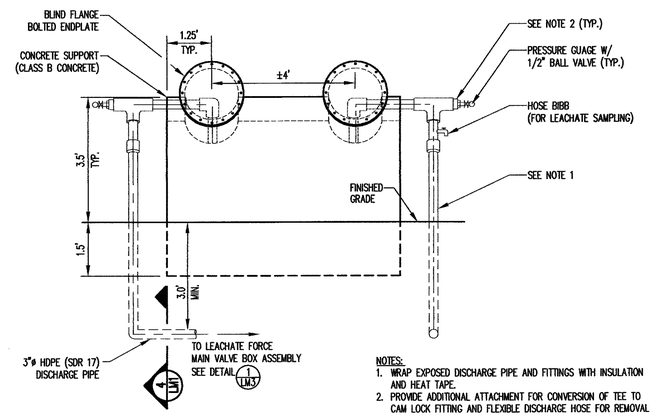

NOTES:
1. WRAP EXPOSED DISCHARGE PIPE AND FITTINGS WITH INSULATION AND HEAT TAPE.
2. PROVIDE ADDITIONAL ATTACHMENT FOR CONVERSION OF TEE TO CAM LOCK FITTING AND FLEXIBLE DISCHARGE HOSE FOR REMOVAL OF STORMWATER.

SIDE RISER – FRONT VIEW

DETAIL 4/LM2 SCALE: 1"= 2'

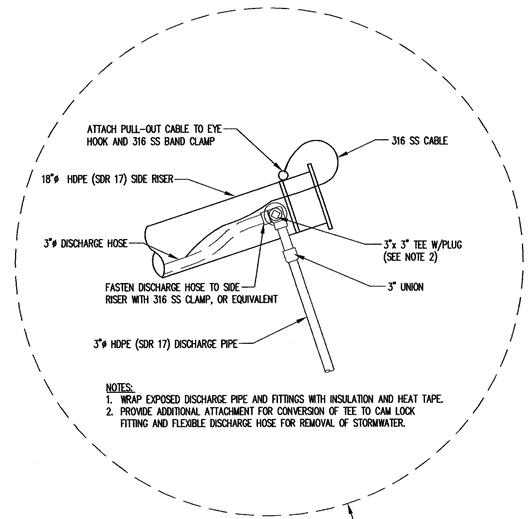

NOTES:
1. WRAP EXPOSED DISCHARGE PIPE AND FITTINGS WITH INSULATION AND HEAT TAPE.
2. PROVIDE ADDITIONAL ATTACHMENT FOR CONVERSION OF TEE TO CAM LOCK FITTING AND FLEXIBLE DISCHARGE HOSE FOR REMOVAL OF STORMWATER.

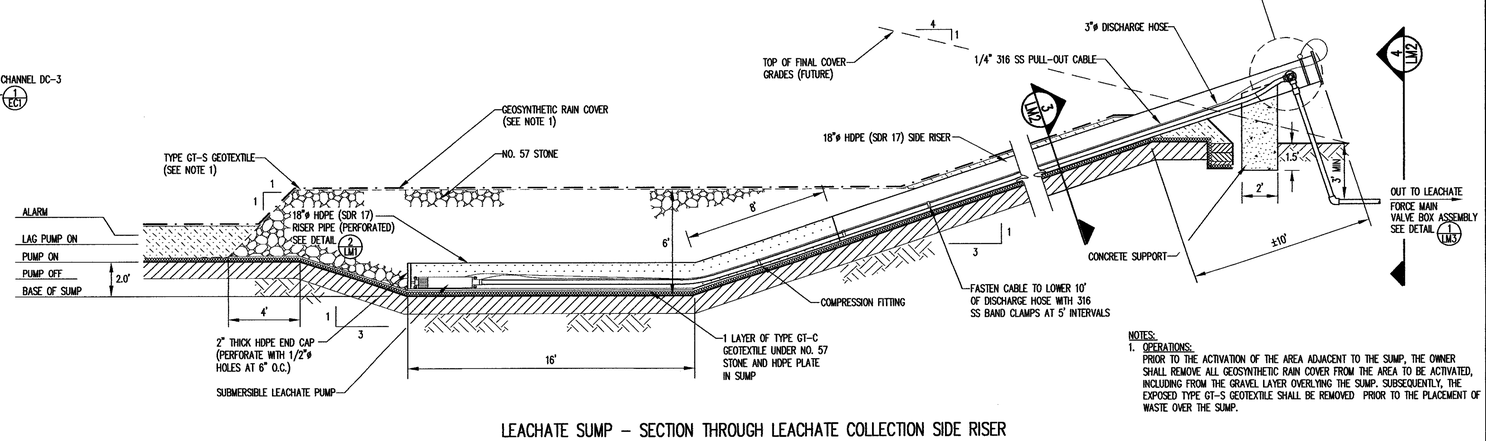

NOTES:
1. OPERATIONS:
PRIOR TO THE ACTIVATION OF THE AREA ADJACENT TO THE SUMP, THE OWNER SHALL REMOVE ALL GEOSYNTHETIC RAIN COVER FROM THE AREA TO BE ACTIVATED, INCLUDING FROM THE GRAVEL LAYER OVERLYING THE SUMP. SUBSEQUENTLY, THE EXPOSED TYPE GT-S GEOTEXTILE SHALL BE REMOVED PRIOR TO THE PLACEMENT OF WASTE OVER THE SUMP.

LEACHATE SUMP – SECTION THROUGH LEACHATE COLLECTION SIDE RISER

DETAIL 5/LM2 SCALE: 1"= 4'

NO.	DATE	REVISION
1	3/06	REVISED SUMP ELEVATIONS, MODIFIED DETAILS 1-5/LM2

G. N. RICHARDSON & ASSOCIATES, INC.
Engineering and Geological Services
14 N. Boylan Ave. Raleigh, N.C. 27603
ph: 919-828-0577
fax: 919-828-3899
www.gnra.com

SEAL

SEAL

PROJECT TITLE: JOHNSTON COUNTY C&D LANDFILL AREA 2 PERMIT DRAWINGS

DRAWING TITLE: LEACHATE MANAGEMENT SYSTEM DETAILS (SHEET 2 OF 3)

DESIGNED BY: P.K.S.	DRAWN BY: J.A.L.
CHECKED BY:	PROJECT NO.: JOHN-22
SCALE: AS SHOWN	DATE: OCT. 2005
FILE NAME: JOHN-D0371A	
SHEET NO. 12	DRAWING NO. LM2

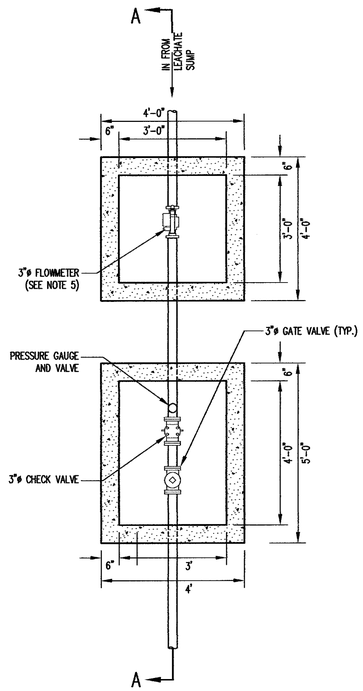

PLAN VIEW

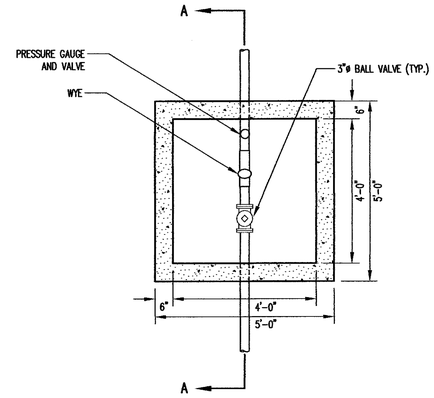

PLAN VIEW

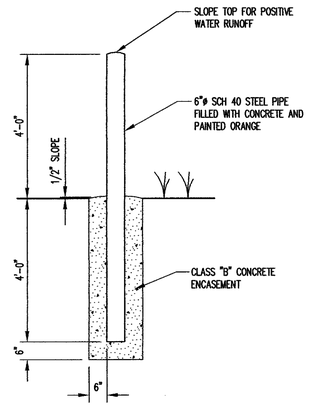

BOLLARD

DETAIL 3 / LM3
NOT TO SCALE

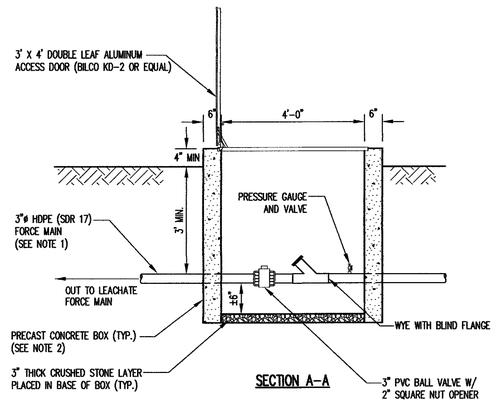

SECTION A-A

PHASE 4A VALVE BOX

DETAIL 2 / LM3
SCALE: 1"= 2'

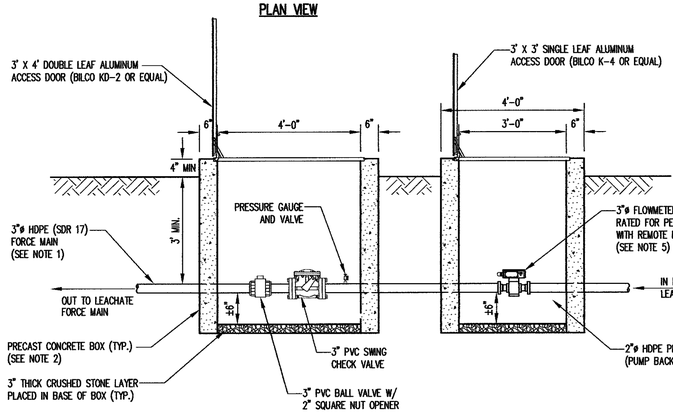

SECTION A-A

LEACHATE FORCEMAIN VALVE BOX ASSEMBLY

DETAIL 1 / LM3
SCALE: 1"= 2'

NOTES:
1. PROVIDE WATERTIGHT JOINTS ON ALL PIPING.
2. PRECAST CONCRETE BOXES AND COVERS SHALL CONFORM TO THE FOLLOWING REQUIREMENTS:
   A. CONCRETE: COMPRESSIVE STRENGTH 4,000 PSI
   B. REINFORCING: ASTM A-615, GRADE 60
   C. MEETS H-20 LOADING.
3. CONTRACTOR SHALL PROVIDE CONCRETE THRUST BLOCKING AND VALVE SUPPORTS AS REQUIRED.
4. THE STORMWATER DISCHARGE PIPE IS TO BE USED TO DISCHARGE STORMWATER INFILTRATION FROM THE LEACHATE COLLECTION SYSTEM PRIOR TO THE PLACEMENT OF ANY WASTE.
5. FLOWMETER SHALL BE INSTALLED IN PIPE WITH MINIMUM OF 5 PIPE DIAMETERS UNOBSTRUCTED PIPE DOWNSTREAM OF METER AND 10 PIPE DIAMETERS UPSTREAM OF METER.
6. CONTRACTOR SHALL VERIFY THAT THE SELECTED BOX IS ADEQUATELY SIZED TO FIT THE PROPOSED VALVES AND FITTINGS.

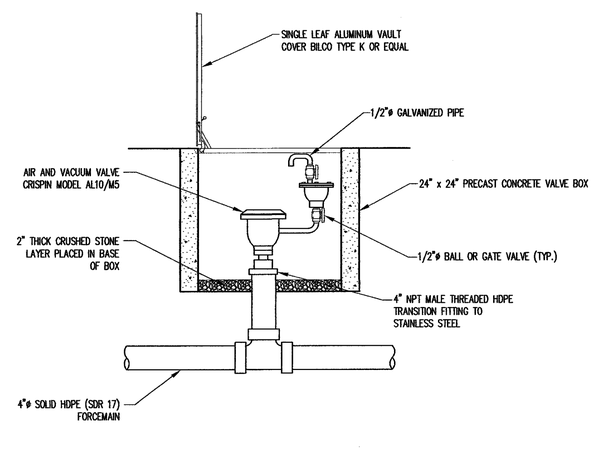

AIR AND VACUUM VALVE ASSEMBLY

DETAIL 4 / LM3
NOT TO SCALE

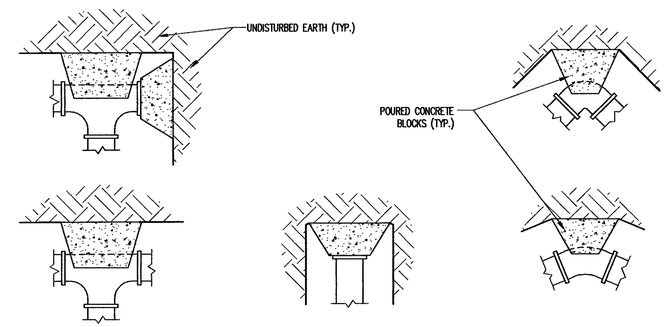

NOTES:
1. THESE DETAILS ARE FOR BOTH VERTICALLY AND HORIZONTALLY LAID PIPE.
2. POURED IN PLACE CONCRETE SHALL BE CLASS B.
3. LEAVE JOINTS CLEAR OF CONCRETE FOR EASY ACCESS.
4. POLYETHYLENE SHALL BE WRAPPED AROUND FITTINGS WHERE CONCRETE BLOCKING WILL EVENTUALLY BE REMOVED.
5. THE CRITICAL CONDITION OF UNDISTURBED EARTH IS ANTICIPATED TO BE SILTY SAND.
6. FITTING FACTORS;
   90° – 1.41
   PLUG – 1.00
   45° – 0.77
   22 1/2° – 0.39
   11 1/4° – 0.20

REQUIRED AREA OF BLOCK FACE EARTH BEARING (B) SHALL BE FIGURED AS FOLLOWS WHERE:

B = AREA OF BLOCK FACE (ft.)
A = AREA OF PIPE DIA. IN SQ. IN.
P = DESIGN WORKING PRESS, PSI.
C = FITTING FACTOR

$$B = \frac{P\ A\ C}{2000}$$

THRUST BLOCKS

DETAIL 5 / LM3
NOT TO SCALE

REVISION		
NO.	DATE	

G. N. RICHARDSON & ASSOCIATES, INC.
Engineering and Geological Services
14 N. Boylan Ave.
Raleigh, N.C. 27603
ph: 919-828-0577
fax: 919-828-3899
www.gnra.com

SEAL

PROJECT TITLE: JOHNSTON COUNTY C&D LANDFILL AREA 2 PERMIT DRAWINGS

DRAWING TITLE: LEACHATE MANAGEMENT SYSTEM DETAILS (SHEET 3 OF 3)

DESIGNED BY: P.K.S.	DRAWN BY: J.A.L.
CHECKED BY:	PROJECT NO.: JOHN-22
SCALE: AS SHOWN	DATE: OCT. 2005
FILE NAME: JOHN-D0361	
SHEET NO. 13	DRAWING NO. LM3

G:\CAD\Johnston\John-22\sheets\JOHN-D0361.dwg, 12/12/2005 3:13:46 PM

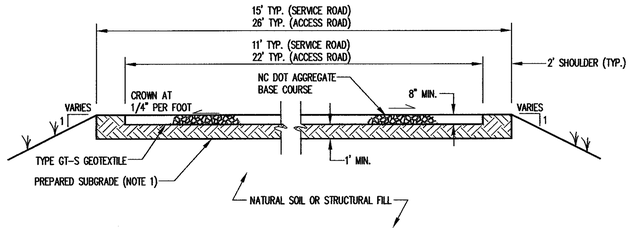

NOTE:
1. IN FILL AREAS, PREPARED SUBGRADE IS EQUIVALENT TO STRUCTURAL FILL. FOR CUT AREAS, REMOVE AND REPLACE WITH STRUCTURAL FILL (SEE PROJECT SPECIFICATIONS).

TYPICAL ROADWAY CROSS SECTION

DETAIL 1/R1
SCALE: 1" = 5'

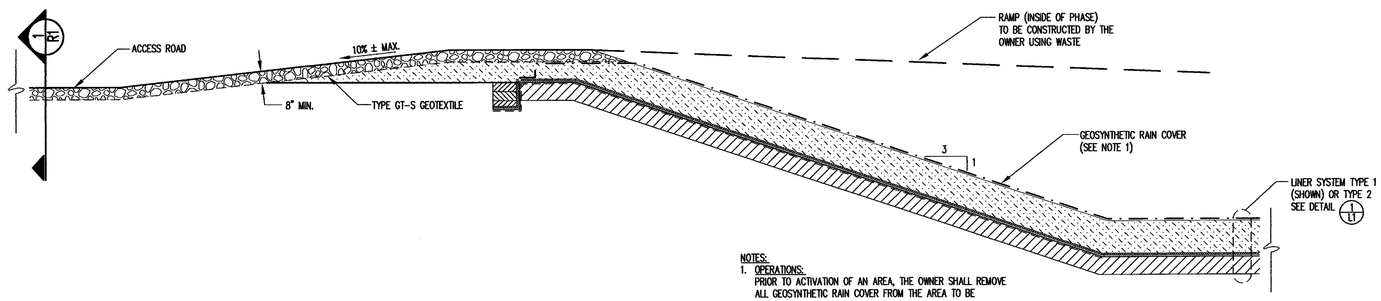

NOTES:
1. OPERATIONS:
PRIOR TO ACTIVATION OF AN AREA, THE OWNER SHALL REMOVE ALL GEOSYNTHETIC RAIN COVER FROM THE AREA TO BE ACTIVATED.

ACCESS RAMP

DETAIL 2/R1
SCALE: 1" = 4'

NO.	DATE	REVISION

G. N. RICHARDSON & ASSOCIATES, INC.
Engineering and Geological Services
14 N. Boylan Ave.
Raleigh, N.C. 27603
www.gnra.com
ph: 919-828-0577
fax: 919-828-3899

SEAL

SEAL

PROJECT TITLE:
JOHNSTON COUNTY C&D LANDFILL
AREA 2
PERMIT DRAWINGS

DRAWING TITLE:
ROADWAY DETAILS

DESIGNED BY: P.K.S.	DRAWN BY: J.A.L.
CHECKED BY:	PROJECT NO.: JOHN-22
SCALE: AS SHOWN	DATE: OCT. 2009
FILE NAME: JOHN-D0387	
SHEET NO. 14	DRAWING NO. R1

DRAINAGE CHANNEL SCHEDULE						
DRAINAGE CHANNEL	LINING	B (FEET)	D (FEET)	M	D_{50} (INCHES)	X (FEET)
DC-1	RIP RAP	8.0	2.0	3	9	1.5
DC-2	RIP RAP	6.0	2.0	3	6	1.0
DC-3	TRM*	6.0	2.0	3	----	----
DC-4A	TRM*	4.0	1.5	3	----	----
DC-4B	RIP RAP	4.0	1.5	3	9	1.5
DC-5A	TRM*	4.0	1.5	3	----	----
DC-5B	RIP RAP	6.0	1.5	3	12	2.0

*TRM = TURF REINFORCEMENT MATTING

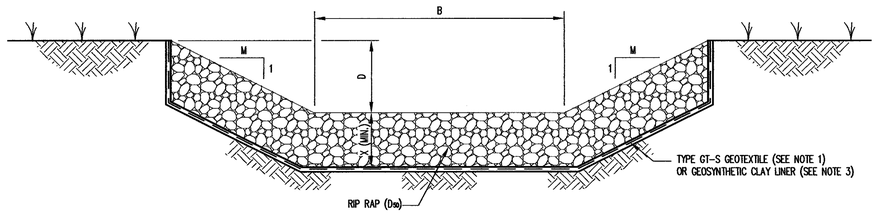

RIP RAP LINED CHANNELS

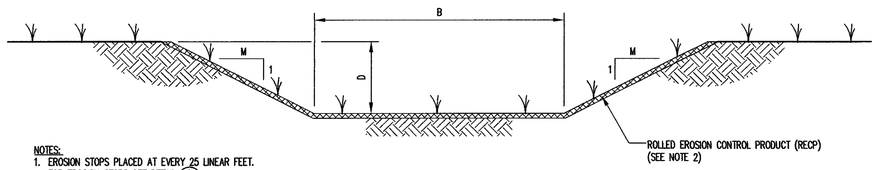

RECP LINED CHANNELS

NOTES:
1. EROSION STOPS PLACED AT EVERY 25 LINEAR FEET. FOR EROSION STOPS SEE DETAIL 2/EC1.
2. FOR ANCHORAGE OF RECP, SEE DETAIL 1/EC1.
3. USE GCL WHERE CHANNEL OVERLIES EXISTING WASTE. WHERE EXCAVATION INTO UNDERLYING WASTE IS REQUIRED, OVEREXCAVATE ONE FOOT AND BACKFILL WITH STRUCTURAL FILL.

DRAINAGE CHANEL DETAILS

DETAIL 1/EC1
NOT TO SCALE

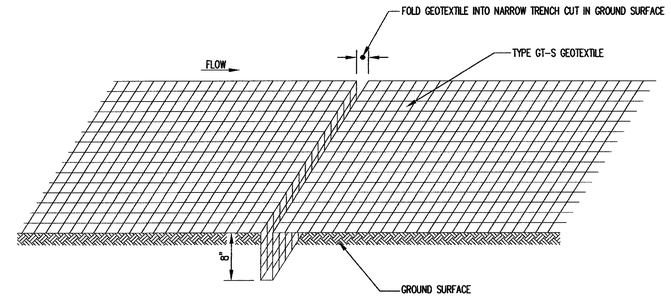

EROSION STOP DETAIL

DETAIL 2/EC1
NOT TO SCALE

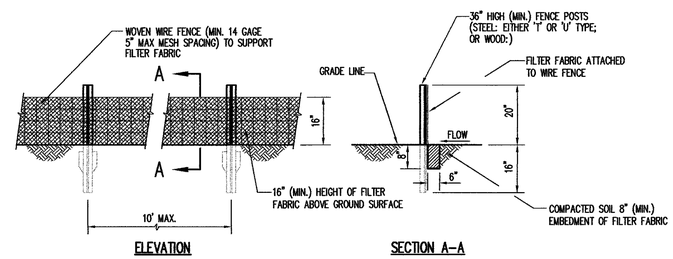

ELEVATION

SECTION A-A

SILT FENCE

DETAIL 3/EC1
NOT TO SCALE

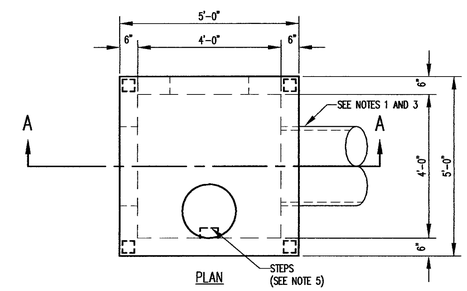

PLAN

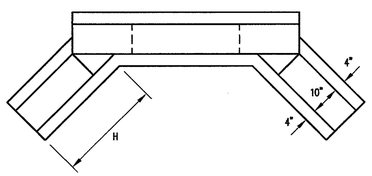

CONCRETE HEADWALL SCHEDULE							
A	B	C	D	E	F	G	H
12"	1'-8"	4'-0"	2'-6"	1'-8"	1'-2"	1'-3"	1'-7"
15"	2'-0"	4'-4"	2'-10"	2'-0"	1'-3"	1'-3"	1'-7"
18"	2'-4"	4'-8"	3'-2"	2'-4"	1'-4"	1'-3"	1'-7"
24"	2'-10"	5'-2"	3'-8"	2'-10"	1'-5"	1'-4"	2'-1"
30"	3'-6"	5'-10"	4'-4"	3'-6"	1'-9"	1'-6"	2'-5"
36"	4'-0"	6'-4"	4'-10"	4'-0"	2'-0"	1'-8"	2'-11"
42"	4'-6"	6'-10"	5'-4"	4'-6"	2'-3"	2'-0"	3'-6"
48"	5'-2"	7'-6"	6'-0"	5'-2"	2'-6"	2'-0"	4'-0"
54"	5'-9"	8'-1"	6'-7"	5'-9"	2'-9"	2'-0"	4'-6"
60"	6'-4"	8'-8"	7'-2"	6'-4"	3'-0"	2'-2"	5'-0"

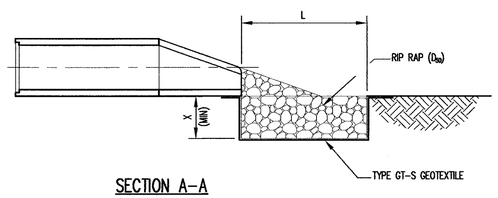

SECTION A-A

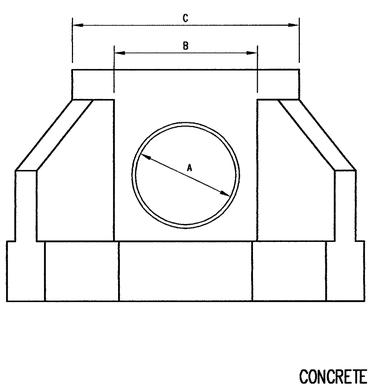

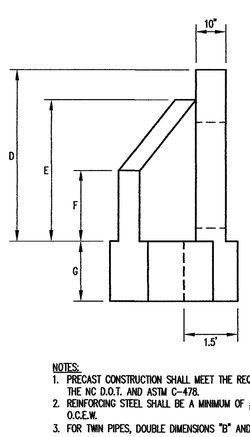

CONCRETE HEADWALL

DETAIL 5/EC1
SCALE: 1" = 2'

NOTES:
1. PRECAST CONSTRUCTION SHALL MEET THE REQUIREMENTS OF THE NC D.O.T. AND ASTM C-478.
2. REINFORCING STEEL SHALL BE A MINIMUM OF #4 @ 6 O.C.E.W.
3. FOR TWIN PIPES, DOUBLE DIMENSIONS "B" AND "C".

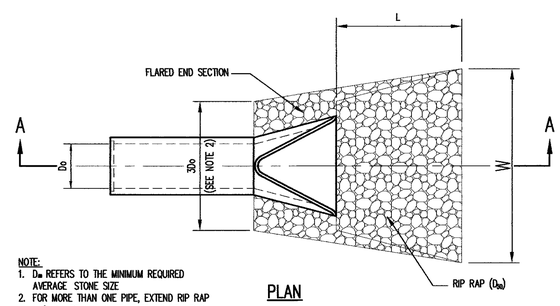

NOTE:
1. D_{50} REFERS TO THE MINIMUM REQUIRED AVERAGE STONE SIZE
2. FOR MORE THAN ONE PIPE, EXTEND RIP RAP 1.0' MIN. BEYOND OUTSIDE EDGES OF PIPES.

PLAN

RIP RAP OUTLET PROTECTION
(OUTLET TO FLAT AREA)

DETAIL 6/EC1 (1)
NOT TO SCALE

RIP RAP OUTLET PROTECTION SCHEDULE					
PIPE	D_o (INCHES)	L (FEET)	W (FEET)	D_{50} (INCHES)	X (FEET)
C-1	42 (2 PIPES)	30	37	12	1.5
C-2	24	12	14	6	1.0
C-3	30	16	19	6	1.0

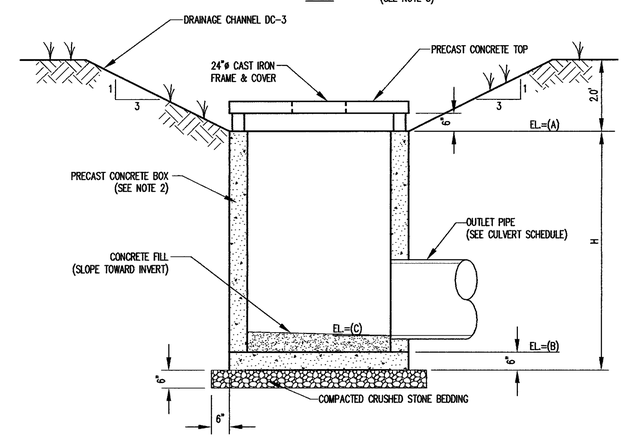

SECTION A-A

NOTES:
1. PROVIDE WATERTIGHT JOINTS ON ALL PIPING.
2. PRECAST CONCRETE BOXES SHALL CONFORM TO THE FOLLOWING REQUIREMENTS:
   A. CONCRETE: COMPRESSIVE STRENGTH 4000 PSI
   B. REINFORCING: ASTM A-615, GRADE 60 C. MEETS H-20 LOADING.
3. PIPES MAY BE ORIENTED DIFFERENTLY WITH RESPECT TO THE THE CHANNEL THAN DISPLAYED HERE. SEE DRAWING EC1 FOR PROPER ORIENTATION.
4. THE CONTRACTOR SHALL PROVIDE ADEQUATE PROTECTION FROM SEDIMENTATION FOR ALL DROP INLETS USING GRAVEL AND WIRE MESH FILTERS OR OTHER METHOD AS APPROVED BY THE ENGINEER.
5. PROVIDE STEPS FOR DROP INLETS WITH H>4.5'. STEPS SHALL HAVE A 16" SPACING THE FULL HEIGHT OF THE DROP INLET. START FIRST STEP 6" BELOW TOP.

DROP INLET SCHEDULE				
DROP INLET	A	B	C	H
DI-1	161.8'	153.5'	154.0'	8.8'
DI-2	159.8'	152.5'	153.0'	7.8'

DROP INLET

DETAIL 4/EC1 (1)
NOT TO SCALE

NO.	REVISION	DATE
1	MODIFIED DETAILS 4/EC1 & 6/EC1	3/06

G. N. RICHARDSON & ASSOCIATES, INC.
Engineering and Geological Services
14 N. Boylan Ave. Raleigh, N.C. 27603
ph: 919-828-0577
fax: 919-828-3899
www.gnra.com

SEAL

PROJECT TITLE: JOHNSTON COUNTY C&D LANDFILL
AREA 2
PERMIT DRAWINGS

DRAWING TITLE: EROSION AND SEDIMENTATION CONTROL DETAILS (SHEET 1 OF 2)

DESIGNED BY: P.K.S.	DRAWN BY: J.A.L.
CHECKED BY:	PROJECT NO.: JOHN-22
SCALE: AS SHOWN	DATE: OCT. 2005
FILE NAME: JOHN-D0364A	
SHEET NO. 15	DRAWING NO. EC1

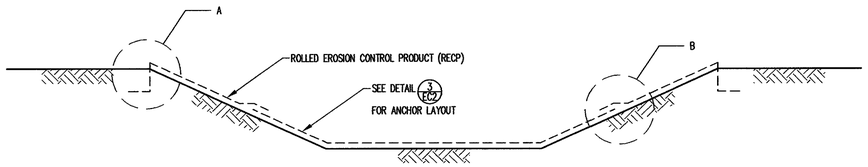

TYPICAL CHANNEL CROSS SECTION

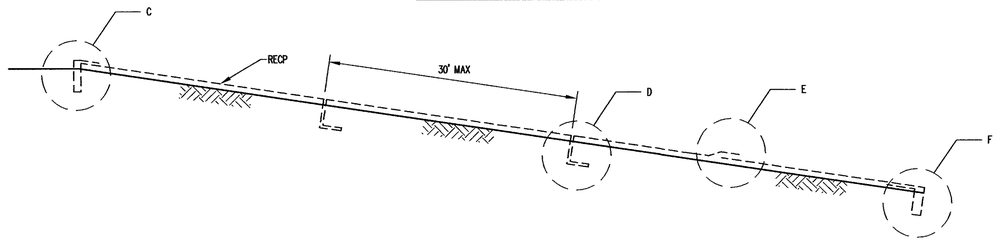

TYPICAL CHANNEL PROFILE

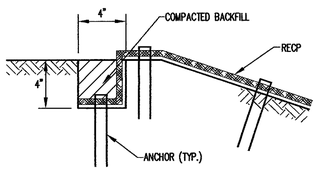

A. LONGITUDINAL ANCHOR TRENCH

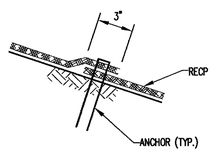

B. OVERLAP AT ADJACENT EDGES

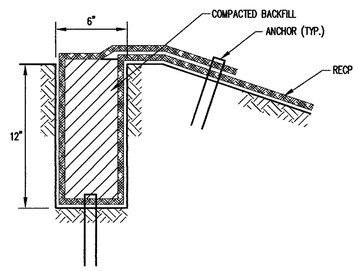

C. UPSTREAM TERMINAL ANCHOR TRENCH

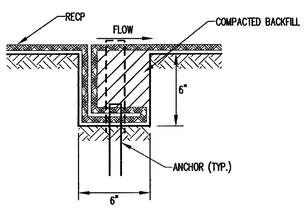

D. INTERMITTENT CHECK SLOT

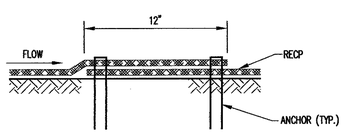

E. OVERLAP AT ROLL ENDS

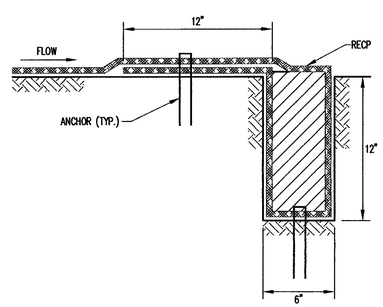

F. DOWNSTREAM TERMINAL ANCHOR TRENCH

NOTES:

1. PLACE ANCHORS AT ANCHOR TRENCHES, OVERLAPS, AND CHECK SLOTS ON 1 FOOT CENTERS. IF APPLICABLE, STAGGER ANCHOR SPACING BETWEEN MULTIPLE ROWS OF ANCHORS.

INSTALLATION OF ROLLED EROSION CONTROL PRODUCTS (CHANNELS)

DETAIL 1/EC2
NOT TO SCALE

ANCHOR SPACING SCHEDULE	
LOCATION	REQUIRED ANCHOR SPACING (ANCHORS/YD^2)
ALL CHANNELS	2.5
1.5H:1V SLOPES	2.0
2H:1V SLOPES	2.0
2.5H:1V SLOPES	1.5
3H:1V SLOPES	1.5
3.5H:1V SLOPES	1.0
4H:1V SLOPES	1.0

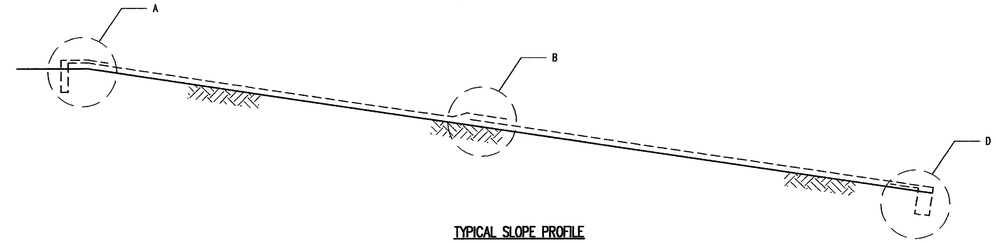

TYPICAL SLOPE PROFILE

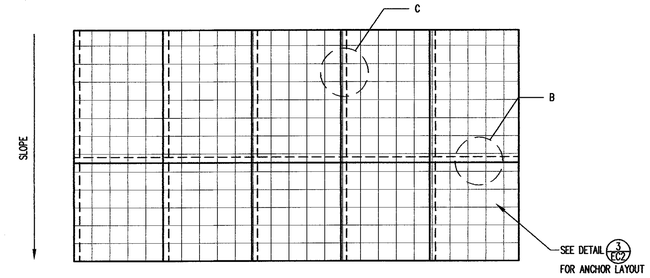

TYPICAL SLOPE PLAN VIEW

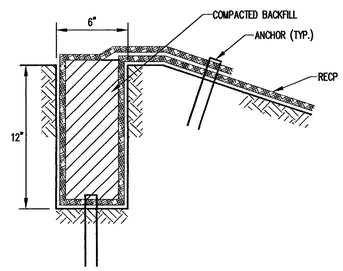

A. UPSLOPE TERMINAL ANCHOR TRENCH

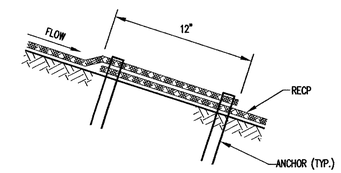

B. OVERLAP AT ROLL ENDS

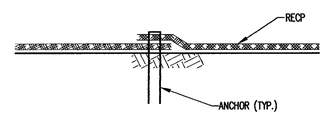

C. OVERLAP AT ADJACENT EDGES

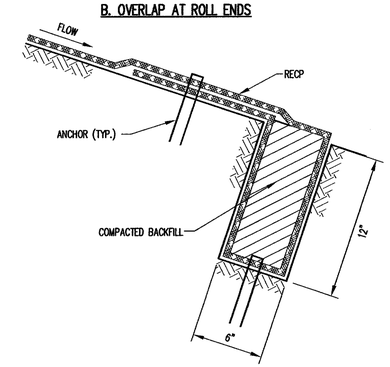

D. DOWNSLOPE TERMINAL ANCHOR TRENCH

NOTES:

1. PLACE ANCHORS AT ANCHOR TRENCHES, OVERLAPS, AND CHECK SLOTS ON 1 FOOT CENTERS. IF APPLICABLE, STAGGER ANCHOR SPACING BETWEEN MULTIPLE ROWS OF ANCHORS.

INSTALLATION OF ROLLED EROSION CONTROL PRODUCTS (SLOPES)

DETAIL 2/EC2
NOT TO SCALE

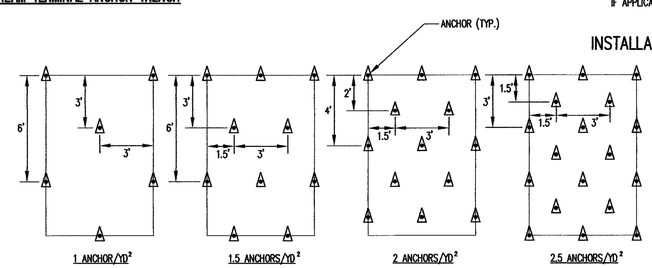

ANCHOR LAYOUT

DETAIL 3/EC2
NOT TO SCALE

REVISION | DATE | NO.

G. N. RICHARDSON & ASSOCIATES, INC.
Engineering and Geological Services
14 N. Boylan Ave.
Raleigh, N.C. 27603
ph: 919-828-0577
fax: 919-828-3899
www.gnra.com

SEAL

SEAL

PROJECT TITLE: JOHNSTON COUNTY C&D LANDFILL
AREA 2
PERMIT DRAWINGS

DRAWING TITLE: EROSION AND SEDIMENTATION CONTROL DETAILS (SHEET 2 OF 2)

DESIGNED BY: P.K.S.	DRAWN BY: J.A.L.
CHECKED BY:	PROJECT NO.: JOHN-22
SCALE: AS SHOWN	DATE: OCT. 2005
FILE NAME: JOHN-D0363	
SHEET NO. 16	DRAWING NO. EC2

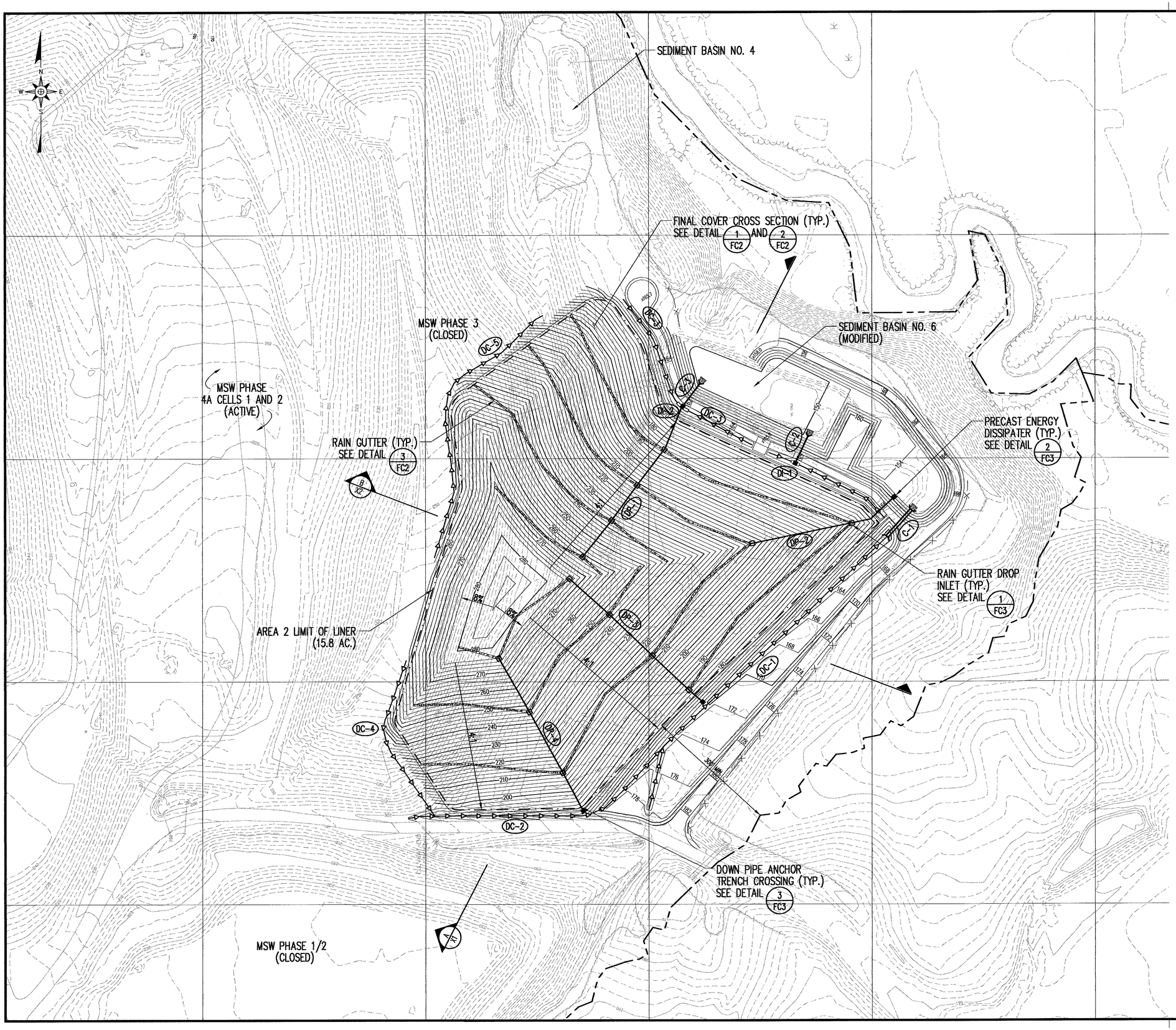

PIPING SCHEDULE	
RAIN GUTTERS	
PIPE DIAMETER (INCHES)	MAX. DRAINAGE AREA (AC.)
6	0.32
8	0.67
10	1.18
12	1.89
DOWN PIPE DROP INLETS	
PIPE DIAMETER (INCHES)	MAX. DRAINAGE AREA (AC.)
8	0.52
10	0.80
12	1.14
14	1.37
16	1.80
18	2.27
DOWN PIPES	
PIPE DIAMETER (INCHES)	MAX. DRAINAGE AREA (AC.)
8	0.77
10	1.36
12	2.18
14	2.76
16	3.99
18	5.42

LEGEND

- 150 — EXISTING 10' CONTOUR (SEE REFERENCE 1)
- EXISTING 2' CONTOUR
- APPROXIMATE PROPERTY LINE
- 150 — PROPOSED 10' CONTOUR
- PROPOSED 2' CONTOUR
- DP-3 — DOWN PIPE
- DC-1 — DRAINAGE CHANNEL
- C-1 — CULVERT NUMBER
- DI-1 — DROP INLET NUMBER
- DOWN PIPE DROP INLET
- PRECAST ENERGY DISSIPATER
- RAIN GUTTER

NOTES

1. GRADES SHOWN REPRESENT APPROXIMATE TOP OF FINAL COVER GRADES.
2. THE RAIN GUTTERS AND DOWN PIPES SHOWN ARE CONCEPTUAL LOCATIONS ONLY. THE DESIGN OF THESE DEVICES IS TO BE EVALUATED PRIOR TO THE PLACEMENT OF FINAL COVER.

REFERENCES

1. OVERALL SITE TOPOGRAPHY PROVIDED BY GEODATA CORPORATION, BASED ON MAY 21, 2004 AERIAL PHOTOGRAPHY. TOPOGRAPHY IN ACTIVE AREAS PROVIDED BY SPECTRUM NC, LLC, BASED ON MARCH 21, 2005 AERIAL PHOTOGRAPHY. TOPOGRAPHY OF PHASE 4 CELL 2 PROVIDED BY 4D SITE SOLUTIONS INC., DATED JUNE 2, 2005. TOPOGRAPHY IN PHASE 5 AREA PROVIDED BY SOUTHWIND SURVEYING AND ENGINEERING, GARNER, NC, DATED JUNE 16, 2003.

0 100' 200' 300'

DATE	NO.	REVISION
3/06	1	REVISED AREA 2 BASE GRADES

G. N. RICHARDSON & ASSOCIATES, INC.
Engineering and Geological Services
14 N. Boylan Ave.
Raleigh, N.C. 27603
ph: 919-828-0577
fax: 919-828-3899
www.gnra.com

SEAL

PROJECT TITLE: JOHNSTON COUNTY C&D LANDFILL AREA 2 PERMIT DRAWINGS

DRAWING TITLE: AREA 2 FINAL COVER GRADING AND DRAINAGE PLAN

DESIGNED BY: P.K.S.	DRAWN BY: C.T.J.
CHECKED BY:	PROJECT NO.: JOHN-22
SCALE: AS SHOWN	DATE: OCT. 2005
FILE NAME: JOHN-D0386A	
SHEET NO. 17	DRAWING NO. FC1

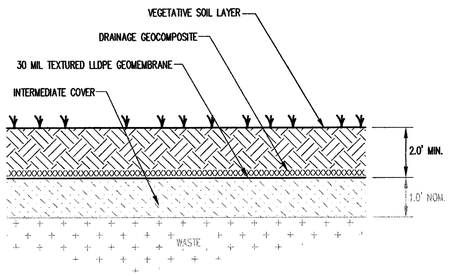

FINAL COVER SYSTEM

DETAIL 1/FC2
NOT TO SCALE

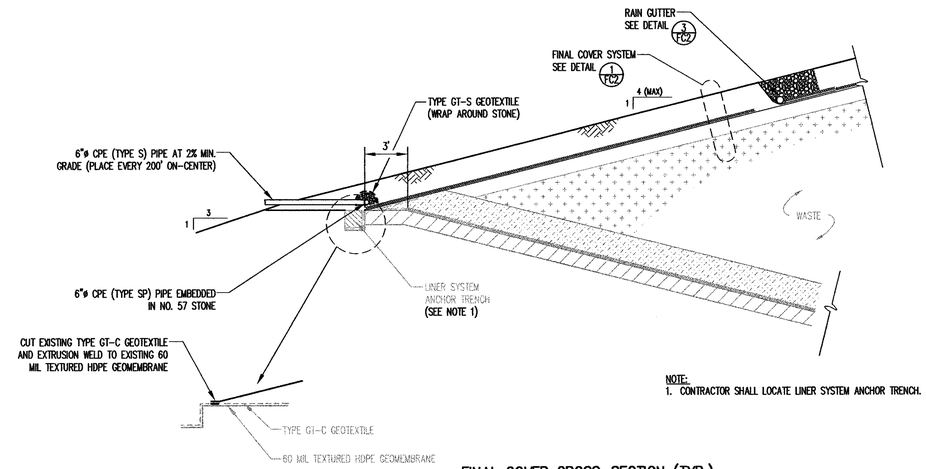

NOTE:
1. CONTRACTOR SHALL LOCATE LINER SYSTEM ANCHOR TRENCH.

FINAL COVER CROSS-SECTION (TYP.)

DETAIL 2/FC2
NOT TO SCALE

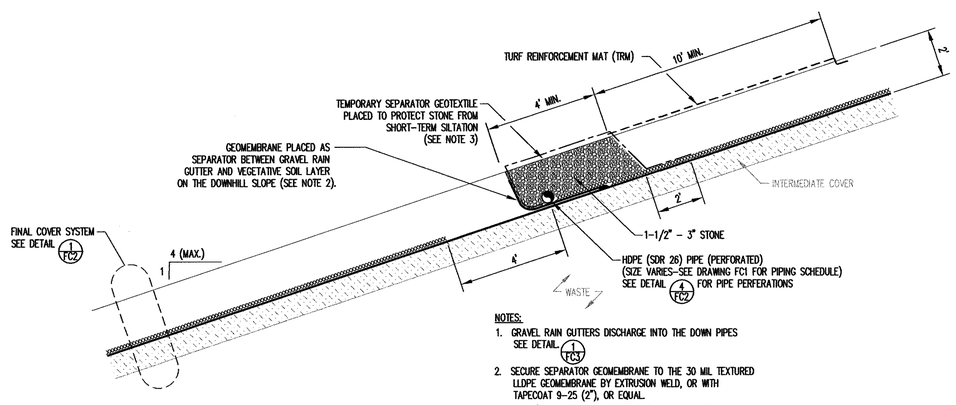

NOTES:
1. GRAVEL RAIN GUTTERS DISCHARGE INTO THE DOWN PIPES SEE DETAIL 1/FC3
2. SECURE SEPARATOR GEOMEMBRANE TO THE 30 MIL TEXTURED LLDPE GEOMEMBRANE BY EXTRUSION WELD, OR WITH TAPECOAT 9-25 (2"), OR EQUAL.
3. 4 OZ./ SY NON-WOVEN GEOTEXTILE SHALL BE USED.

RAIN GUTTER

DETAIL 3/FC2
NOT TO SCALE

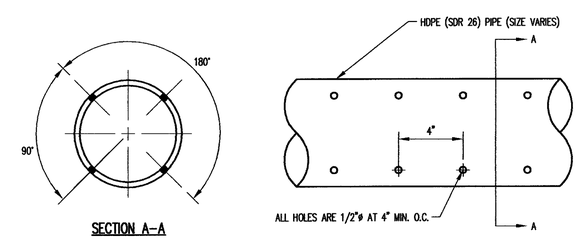

RAIN GUTTER PIPE PERFORATIONS

DETAIL 4/FC2
NOT TO SCALE

NO.	DATE	REVISION

G. N. RICHARDSON & ASSOCIATES, INC.
Engineering and Geological Services
14 N. Boylan Ave.
Raleigh, N.C. 27603
ph: 919-828-0577
fax: 919-828-3899
www.gnra.com

SEAL

SEAL

PROJECT TITLE:
JOHNSTON COUNTY C&D LANDFILL
AREA 2
PERMIT DRAWINGS

DRAWING TITLE:
FINAL COVER DETAILS
(SHEET 1 OF 2)

DESIGNED BY: P.K.S.	DRAWN BY: J.A.L.
CHECKED BY:	PROJECT NO.: JOHN-22
SCALE: AS SHOWN	DATE: OCT. 2005
FILE NAME: JOHN-D0370	
SHEET NO. 18	DRAWING NO. FC2

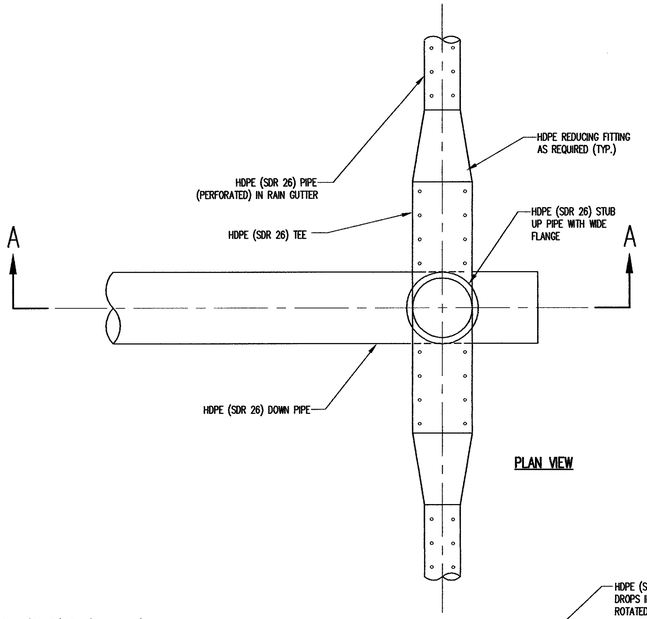

PLAN VIEW

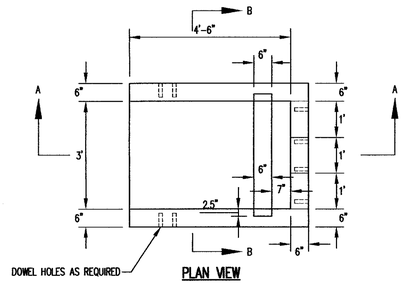

PLAN VIEW

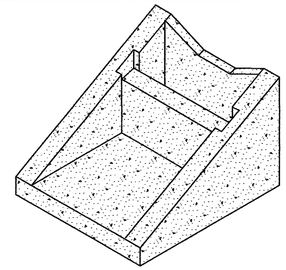

ISOMETRIC VIEW

NOTES:
1. CONCRETE STRENGTH 4,000 PSI MINIMUM.
2. REINFORCING STEEL SHALL CONFORM TO ASTM A-615, GRADE 40.
3. DIMENSIONS SHOWN FOR CONCRETE THICKNESS ARE MINIMUMS. ACTUAL MEASUREMENTS MAY VARY WITH MANUFACTURER'S TOLERANCES.

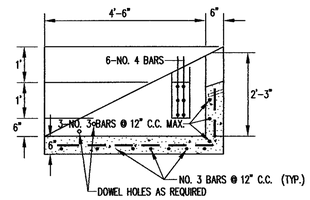

SECTION A-A

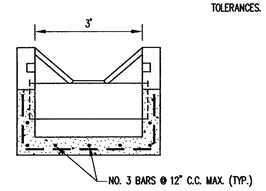

SECTION B-B

PRECAST ENERGY DISSIPATER

DETAIL 2 / FC3
NOT TO SCALE

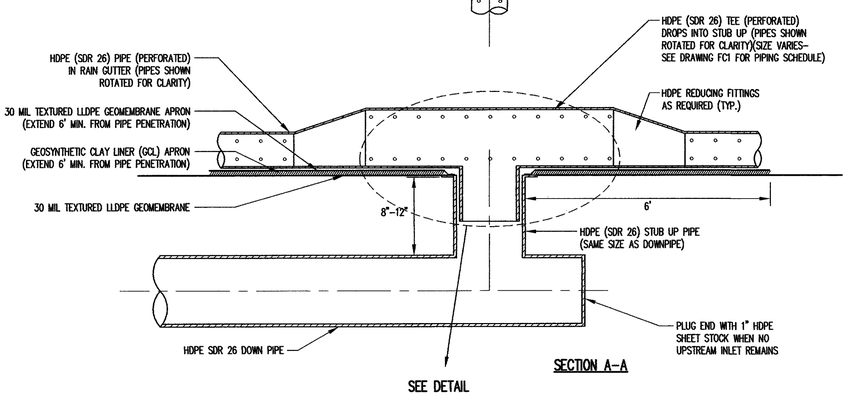

SECTION A-A

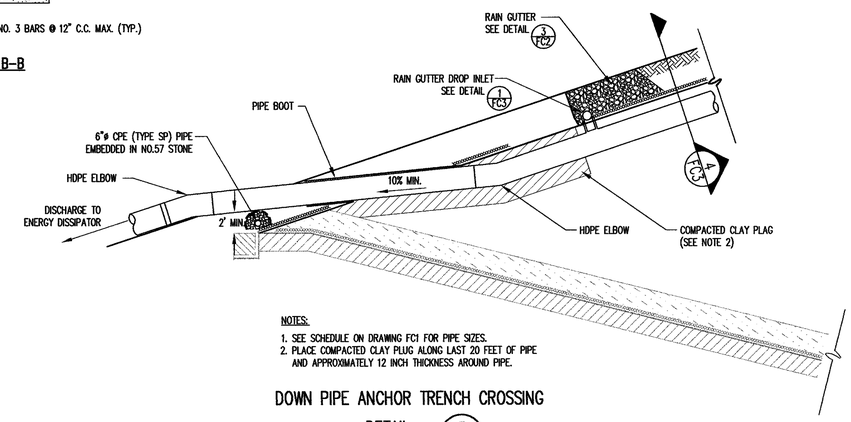

NOTES:
1. SEE SCHEDULE ON DRAWING FC1 FOR PIPE SIZES.
2. PLACE COMPACTED CLAY PLUG ALONG LAST 20 FEET OF PIPE AND APPROXIMATELY 12 INCH THICKNESS AROUND PIPE.

DOWN PIPE ANCHOR TRENCH CROSSING

DETAIL 3 / FC3
NOT TO SCALE

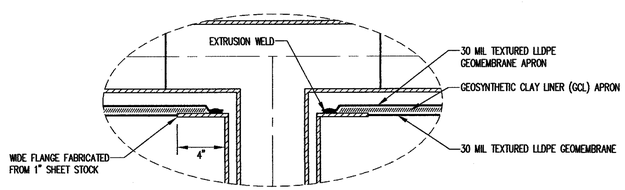

DETAIL

RAIN GUTTER DROP INLET

DETAIL 1 / FC3
NOT TO SCALE

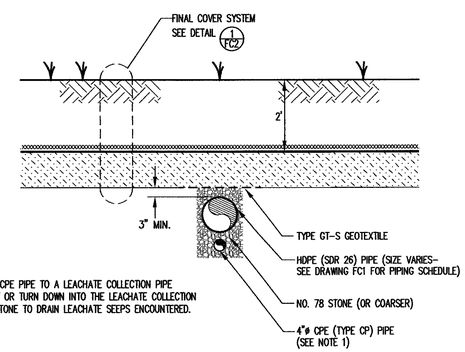

NOTE:
1. CONNECT CPE PIPE TO A LEACHATE COLLECTION PIPE CLEANOUT OR TURN DOWN INTO THE LEACHATE COLLECTION SYSTEM STONE TO DRAIN LEACHATE SEEPS ENCOUNTERED.

TYPICAL DOWN PIPE SECTION

DETAIL 4 / FC3
NOT TO SCALE

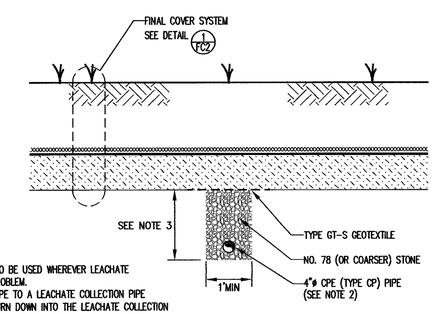

NOTES:
1. THIS DETAIL IS TO BE USED WHEREVER LEACHATE SEEPS ARE A PROBLEM.
2. CONNECT CPE PIPE TO A LEACHATE COLLECTION PIPE CLEANOUT OR TURN DOWN INTO THE LEACHATE COLLECTION SYSTEM STONE TO DRAIN SEEP COLLECTION TRENCH.
3. DEPTH OF TRENCH IS AS REQUIRED TO DRAIN SEEP(S).

SEEP COLLECTION TRENCH

DETAIL 5 / FC3
NOT TO SCALE

NO.	DATE	REVISION

G. N. RICHARDSON & ASSOCIATES, INC.
Engineering and Geological Services
14 N. Boylan Ave.
Raleigh, N.C. 27603
ph: 919-828-0577
fax: 919-828-3899
www.gnra.com

SEAL

SEAL

PROJECT TITLE:
JOHNSTON COUNTY C&D LANDFILL
AREA 2
PERMIT DRAWINGS

DRAWING TITLE:
FINAL COVER DETAILS
(SHEET 2 OF 2)

DESIGNED BY: P.K.S.	DRAWN BY: J.A.L.
CHECKED BY:	PROJECT NO.: JOHN-22
SCALE: AS SHOWN	DATE: OCT. 2005
FILE NAME: JOHN-D0360	
SHEET NO. 19	DRAWING NO. FC3

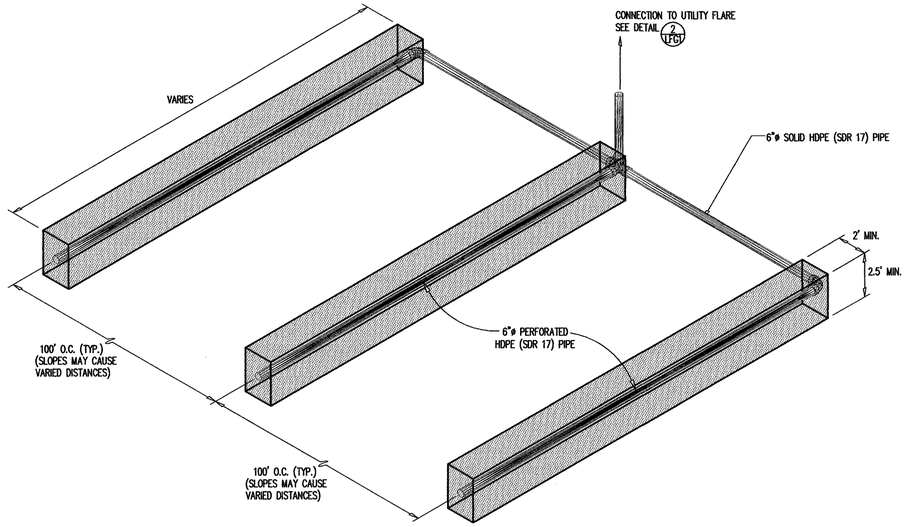

GAS COLLECTION NETWORK

DETAIL 1 / LFG1
NOT TO SCALE

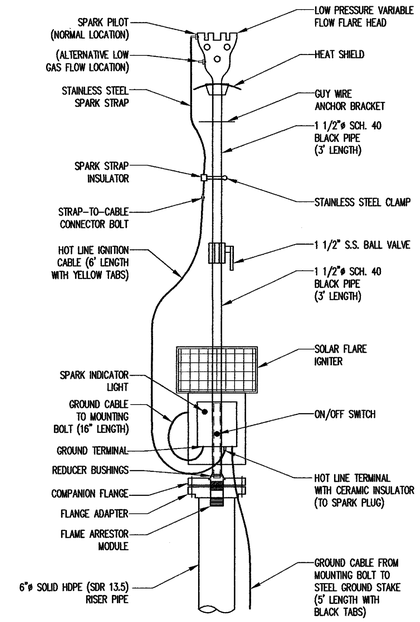

NOTE:
1. USE LANDFILL TECHNOLOGIES, INC. CF-5 SOLAR FLARE OR OTHER APPROVED EQUAL.

LFG UTILITY FLARE

DETAIL 2 / LFG1
SCALE: 1" = 1'

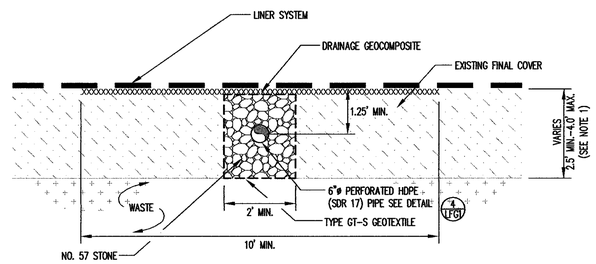

NOTE:
1. EXCAVATE TRENCH SUCH THAT EXISTING COVER IS BREACHED OR TO A MAXIMUM DEPTH OF 4 FEET.

LFG SURFACE COLLECTOR TRENCH CROSS SECTION

DETAIL 3 / LFG1
SCALE: 1" = 2'

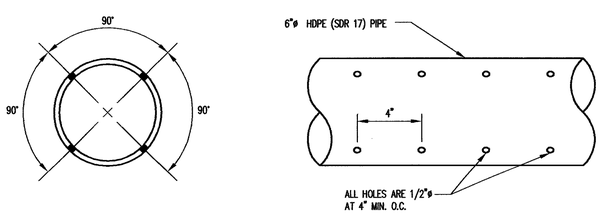

LANDFILL GAS PIPING

HDPE PIPE PERFORATIONS

DETAIL 4 / LFG1
NOT TO SCALE

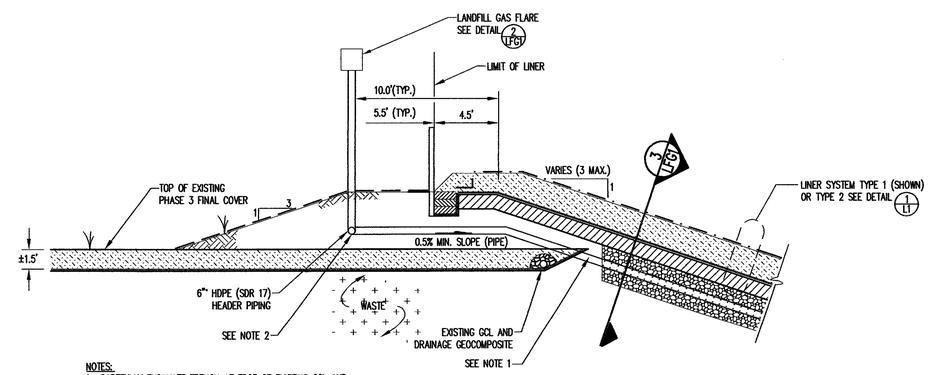

NOTES:
1. CAREFULLY EXCAVATE TRENCH AT EDGE OF EXISTING GCL AND DRAINAGE GEOCOMPOSITE TO MINIMIZE DAMAGE TO THESE MATERIALS.
2. PROVIDE CONCRETE FOR SUPPORT OF PIPING UNDER LANDFILL GAS FLARES AS REQUIRED.

LFG PIPING CROSS SECTION

DETAIL 5 / LFG1
SCALE: 1" = 5'

NO.	DATE	REVISION

G. N. RICHARDSON & ASSOCIATES, INC.
Engineering and Geological Services
14 N. Boylan Ave. Raleigh, N.C. 27603
ph: 919-828-0577
fax: 919-828-3899
www.gnra.com

SEAL

PROJECT TITLE: JOHNSTON COUNTY C&D LANDFILL AREA 2 PERMIT DRAWINGS

DRAWING TITLE: LANDFILL GAS MANAGEMENT DETAILS

DESIGNED BY: P.K.S.	DRAWN BY: J.A.L.
CHECKED BY:	PROJECT NO.: JOHN-22
SCALE: AS SHOWN	DATE: OCT. 2005
FILE NAME: JOHN-D0359	
SHEET NO. 20	DRAWING NO. LFG1

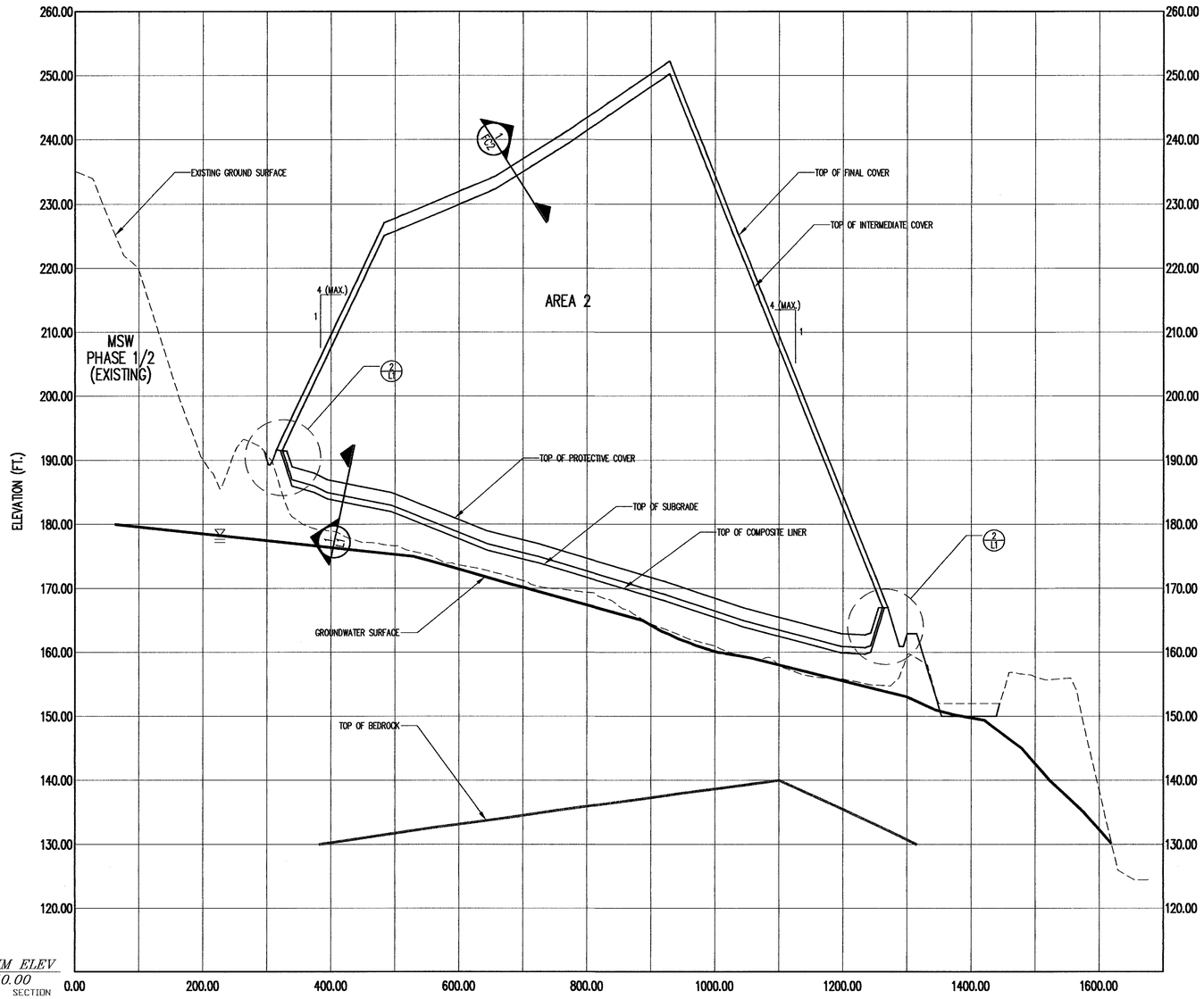

DATUM ELEV
110.00

GROUP SECTION
SECTION AA

SECTION A X1 1
AS SHOWN

*VERTICAL EXAGGERATION = 10x

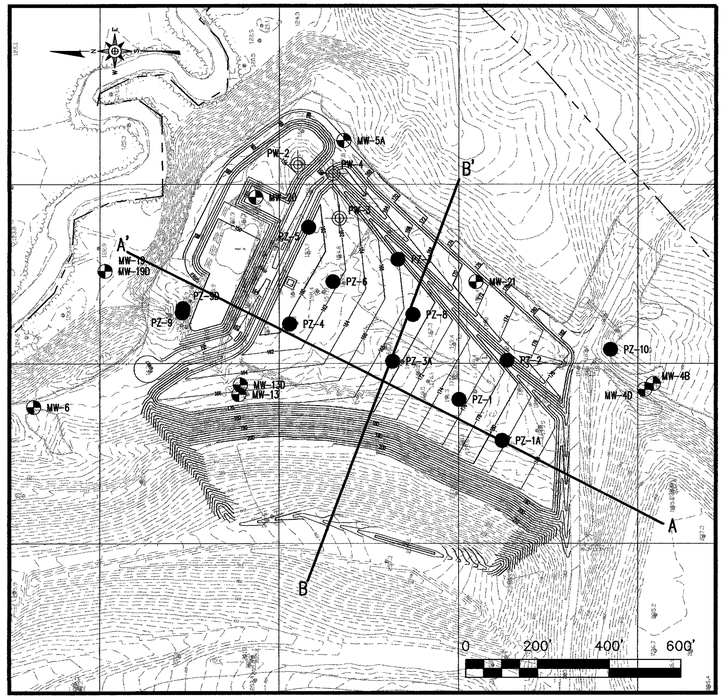

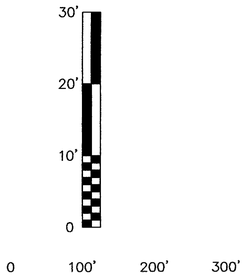

LEGEND

200	EXISTING 10' CONTOUR
	EXISTING 2' CONTOUR
150	PROPOSED 10' CONTOUR
	PROPOSED 2' CONTOUR
	PROPERTY LINE
	AREA 2 LIMIT OF LINER
MW-8D	EXISTING MONITORING WELL
PW-2	EXISTING PIEZOMETER
PZ-4	EXISTING PIEZOMETER

NOTES

1. GRADES SHOWN FOR AREA 2 REPRESENT TOP OF SUBGRADE.

REFERENCES

1. OVERALL SITE TOPOGRAPHY PROVIDED BY GEODATA CORPORATION, BASED ON MAY 21, 2004 AERIAL PHOTOGRAPHY. TOPOGRAPHY IN ACTIVE AREAS PROVIDED BY SPECTRUM NC, LLC, BASED ON MARCH 21, 2005 AERIAL PHOTOGRAPHY. TOPOGRAPHY OF PHASE 4 CELL 2 PROVIDED BY 4D SITE SOLUTIONS INC., DATED JUNE 2, 2005. TOPOGRAPHY IN PHASE 5 AREA PROVIDED BY SOUTHWIND SURVEYING AND ENGINEERING, GARNER, NC, DATED JUNE 16, 2003.

DATE	NO.	REVISION
3/06		REVISED AREA 2 BASE GRADES

G. N. RICHARDSON & ASSOCIATES, INC.
Engineering and Geological Services
14 N. Boylan Ave.
Raleigh, N.C. 27603
ph: 919-828-0577
fax: 919-828-3899
www.gnra.com

SEAL

PROJECT TITLE: JOHNSTON COUNTY C&D LANDFILL
AREA 2
PERMIT DRAWINGS

DRAWING TITLE: AREA 2
ENGINEERING CROSS SECTIONS
(SHEET 2 OF 2)

DESIGNED BY: P.K.S.	DRAWN BY: J.A.L.
CHECKED BY:	PROJECT NO.: JOHN-22
SCALE: AS SHOWN	DATE: OCT. 2005
FILE NAME JOHN-D0394A	
SHEET NO. 21	DRAWING NO. X1

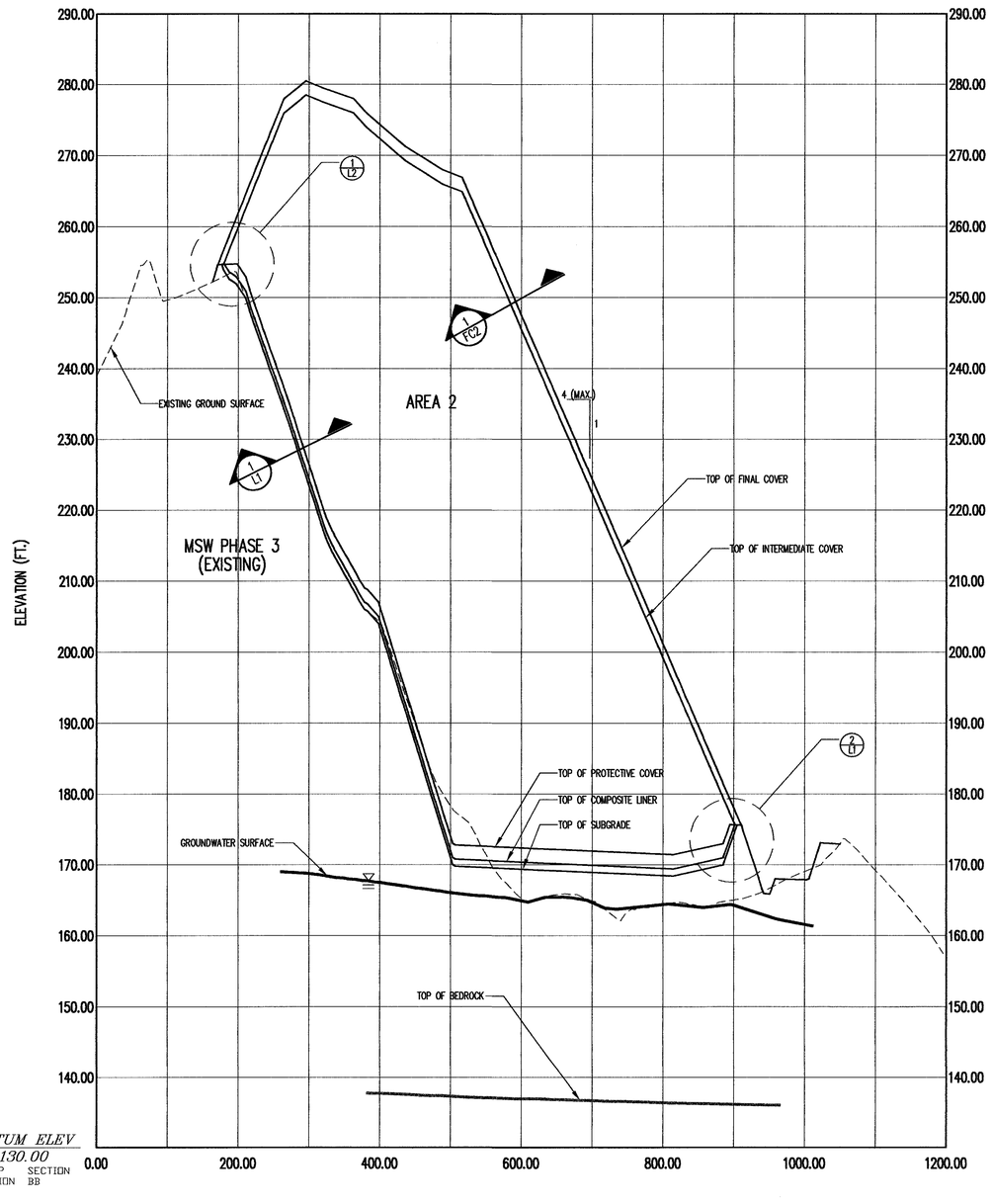

DATUM ELEV
130.00
GROUP SECTION
SECTION BB

SECTION B/X2 1
AS SHOWN

*VERTICAL EXAGGERATION = 10x

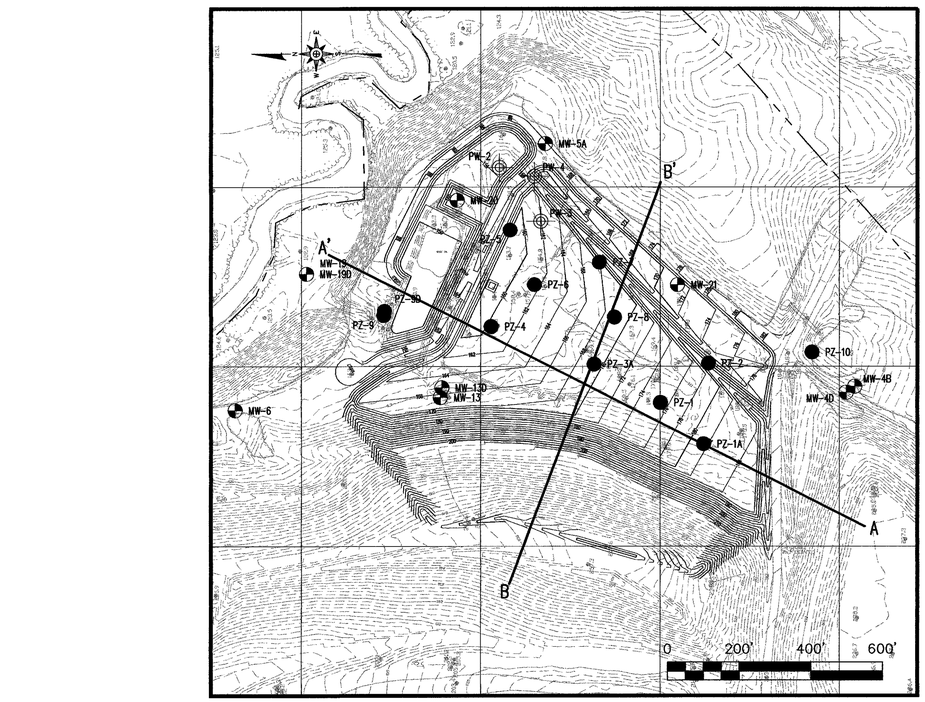

DATE	NO.	REVISION
3/06	1	REVISED AREA 2 BASE GRADES

G. N. RICHARDSON & ASSOCIATES, INC.
Engineering and Geological Services
14 N. Boylan Ave.
Raleigh, N.C. 27603
ph: 919-828-0577
fax: 919-828-3899
www.gnra.com

SEAL

SEAL

PROJECT TITLE:
JOHNSTON COUNTY C&D LANDFILL
AREA 2
PERMIT DRAWINGS

DRAWING TITLE:
AREA 2
ENGINEERING CROSS SECTIONS
(SHEET 2 OF 2)

DESIGNED BY: P.K.S.	DRAWN BY: J.A.L.
CHECKED BY:	PROJECT NO.: JOHN-22
SCALE: AS SHOWN	DATE: OCT. 2005
FILE NAME JOHN-D0395A	
SHEET NO. 22	DRAWING NO. X2

LEGEND

200	EXISTING 10' CONTOUR
	EXISTING 2' CONTOUR
150	PROPOSED 10' CONTOUR
	PROPOSED 2' CONTOUR
	PROPERTY LINE
	AREA 2 LIMIT OF LINER
MW-8D	EXISTING MONITORING WELL
PW-2	EXISTING PIEZOMETER
PZ-4	EXISTING PIEZOMETER

NOTES

1. GRADES SHOWN FOR AREA 2 REPRESENT TOP OF SUBGRADE.

REFERENCES

1. OVERALL SITE TOPOGRAPHY PROVIDED BY GEODATA CORPORATION, BASED ON MAY 21, 2004 AERIAL PHOTOGRAPHY. TOPOGRAPHY IN ACTIVE AREAS PROVIDED BY SPECTRUM NC, LLC, BASED ON MARCH 21, 2005 AERIAL PHOTOGRAPHY. TOPOGRAPHY OF PHASE 4 CELL 2 PROVIDED BY 4D SITE SOLUTIONS INC., DATED JUNE 2, 2005. TOPOGRAPHY IN PHASE 5 AREA PROVIDED BY SOUTHWIND SURVEYING AND ENGINEERING, GARNER, NC, DATED JUNE 16, 2003.

AREA 1 – COMPLETE

AREA 2 – CELL 1

AREA 2 – CELL 2

AREA 2 – COMPLETE

NO.	REVISION	DATE
	REVISED AREA 2 BASE GRADES	3/06

G. N. RICHARDSON & ASSOCIATES, INC.
Engineering and Geological Services
14 N. Boylan Ave.
Raleigh, N.C. 27603
ph: 919-828-0577
fax: 919-828-3899
www.gnra.com

SEAL

SEAL

PROJECT TITLE:
JOHNSTON COUNTY C&D LANDFILL
AREA 2
PERMIT DRAWINGS

DRAWING TITLE:
C&D LANDFILL PHASING PLAN

DESIGNED BY: P.K.S.	DRAWN BY: J.A.L.
CHECKED BY:	PROJECT NO.: JOHN-22
SCALE: AS SHOWN	DATE: OCT. 2005
FILE NAME: JOHN-D0396A	
SHEET NO. 23	DRAWING NO. P1

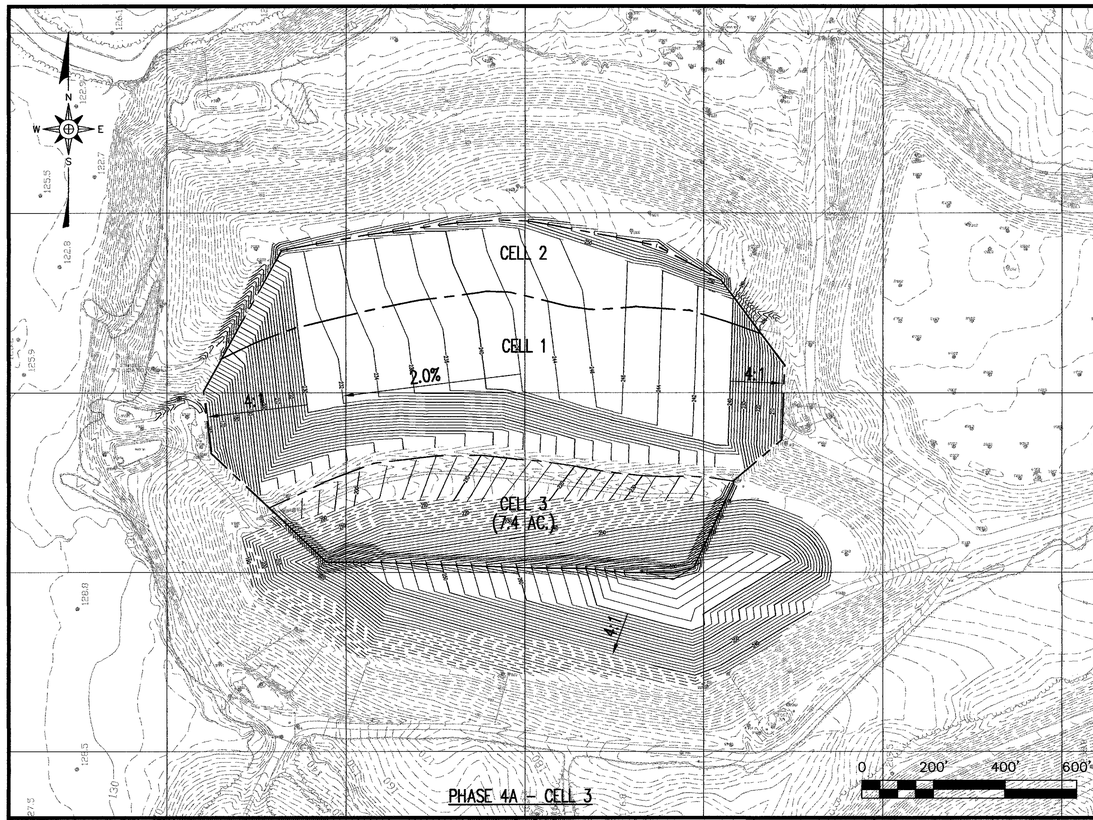

PHASE 4A – CELL 3

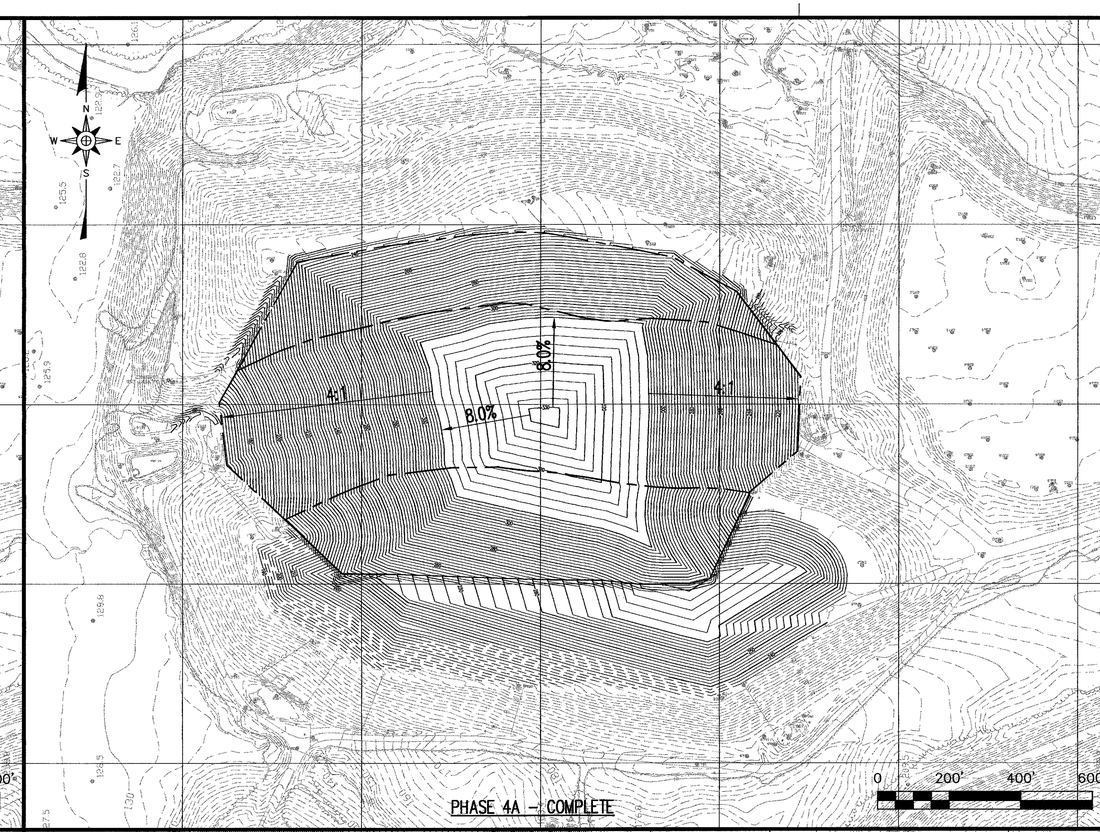

PHASE 4A – COMPLETE

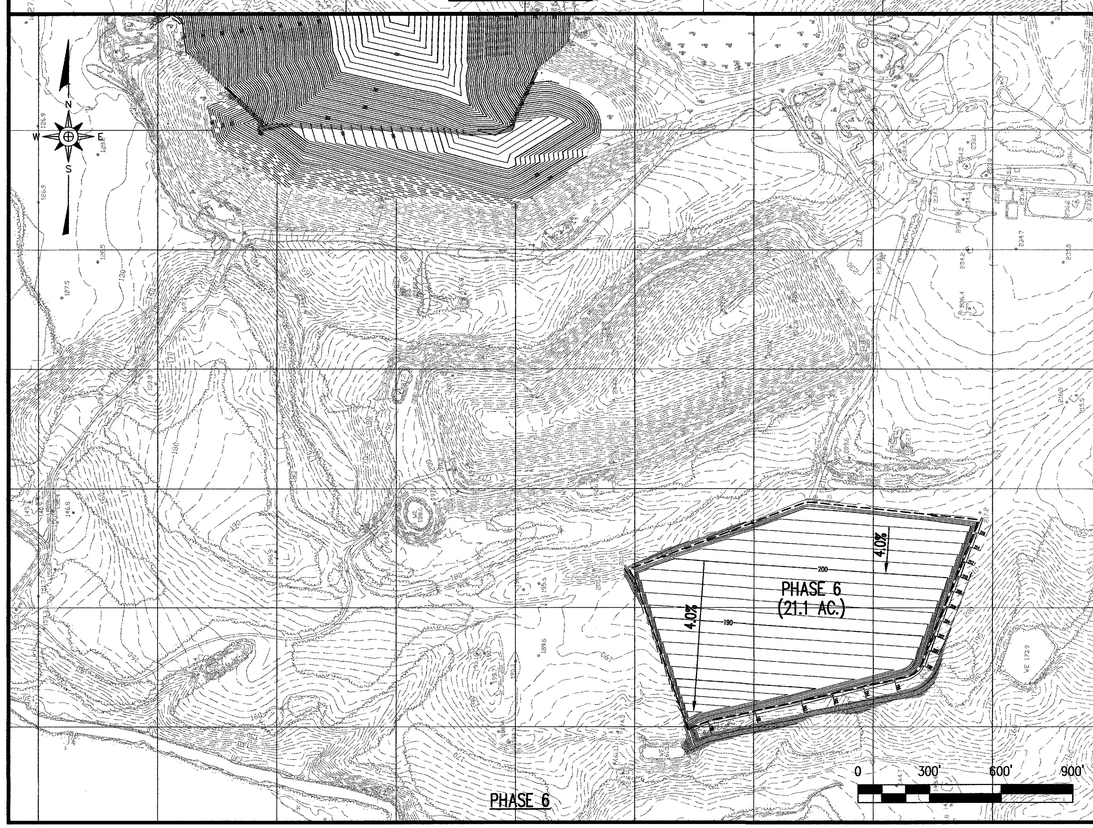

PHASE 6

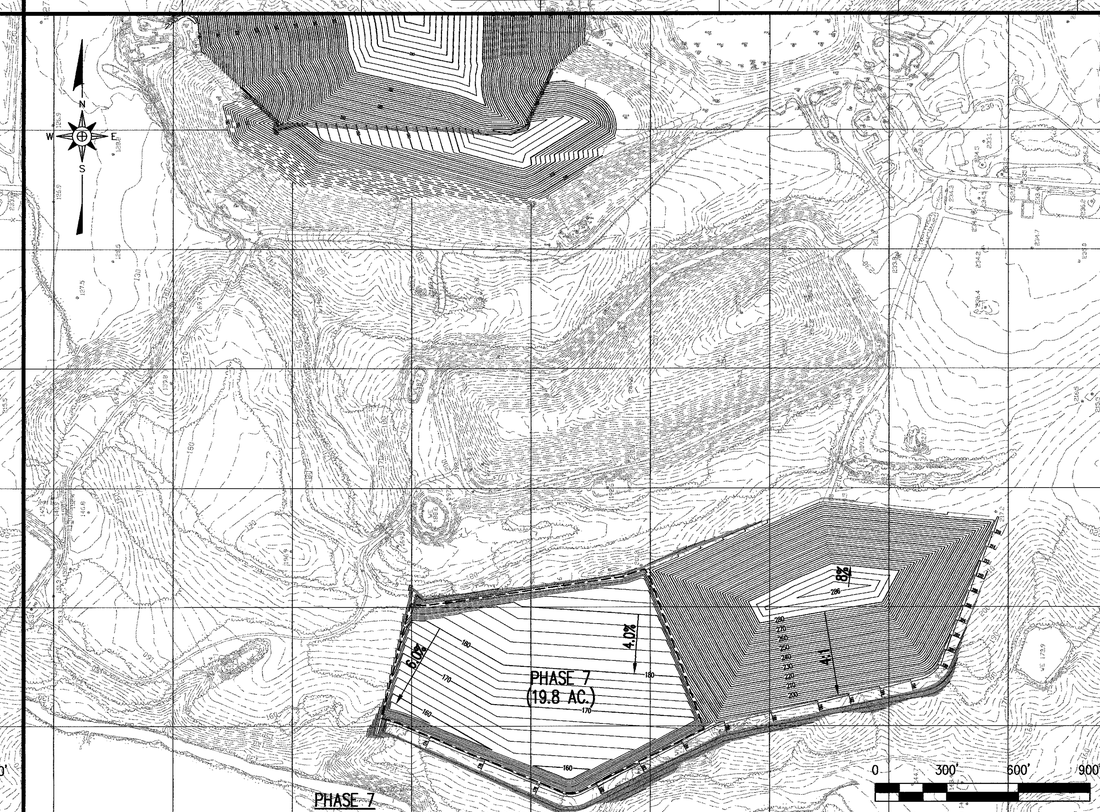

PHASE 7

NO.	DATE	REVISION

G. N. RICHARDSON & ASSOCIATES, INC.
Engineering and Geological Services
14 N. Boylan Ave.
Raleigh, N.C. 27603
ph: 919-828-0577
fax: 919-828-3899
www.gnra.com

SEAL

SEAL

PROJECT TITLE:
JOHNSTON COUNTY C&D LANDFILL
AREA 2
PERMIT DRAWINGS

DRAWING TITLE:
MSW LANDFILL PHASING PLAN
(SHEET 1 OF 2)

DESIGNED BY: P.K.S.	DRAWN BY: C.T.J.
CHECKED BY:	PROJECT NO.: JOHN-22
SCALE: AS SHOWN	DATE: OCT. 2005
FILE NAME JOHN-D0368	
SHEET NO. 24	DRAWING NO. P2

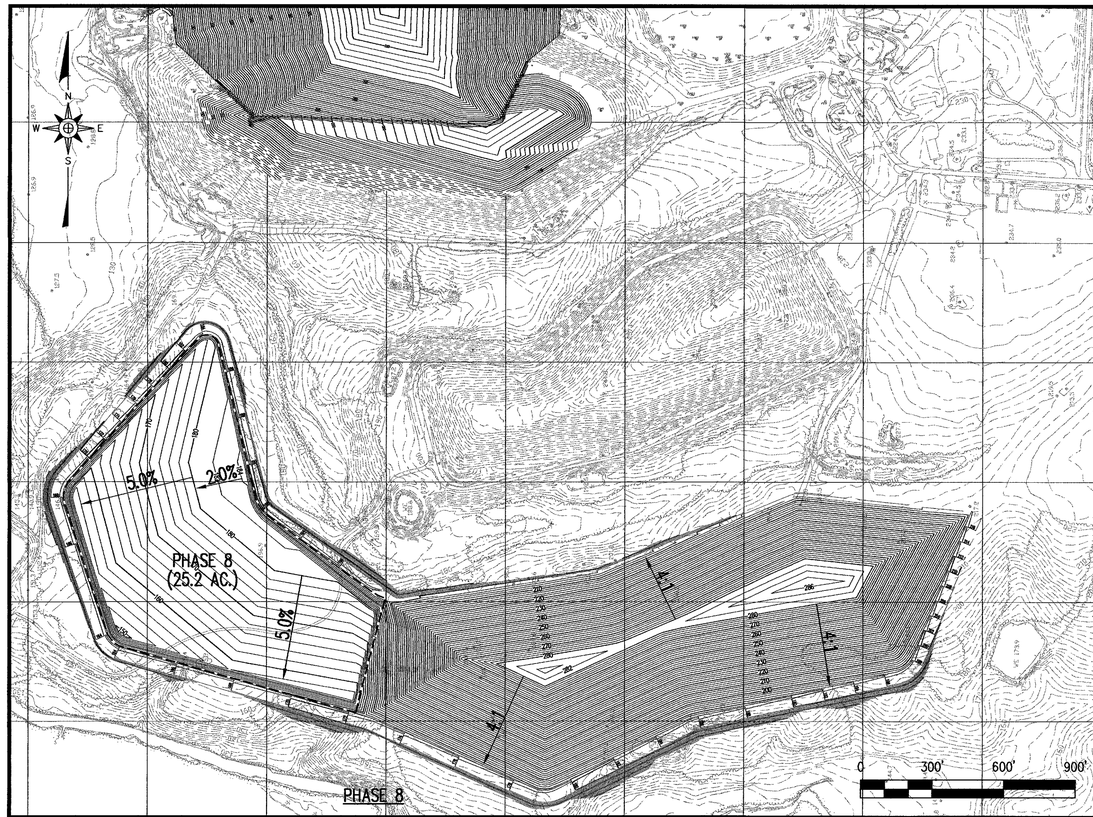

PHASE 8

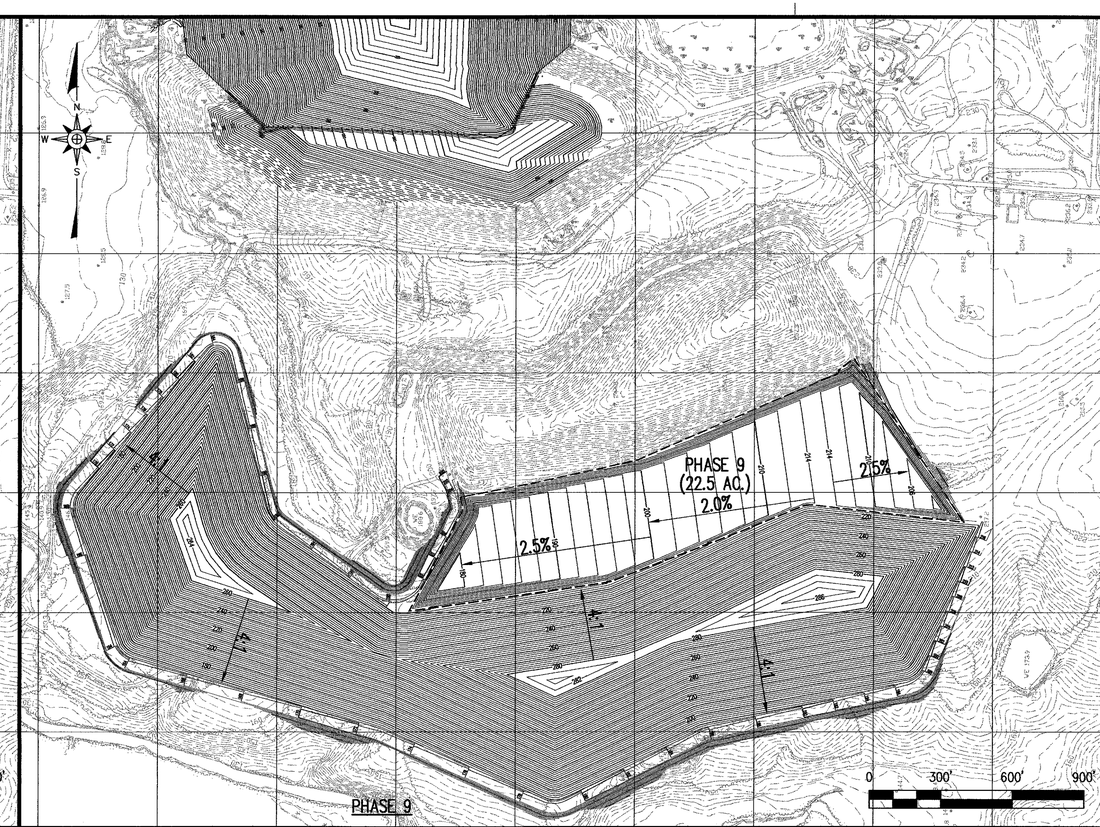

PHASE 9

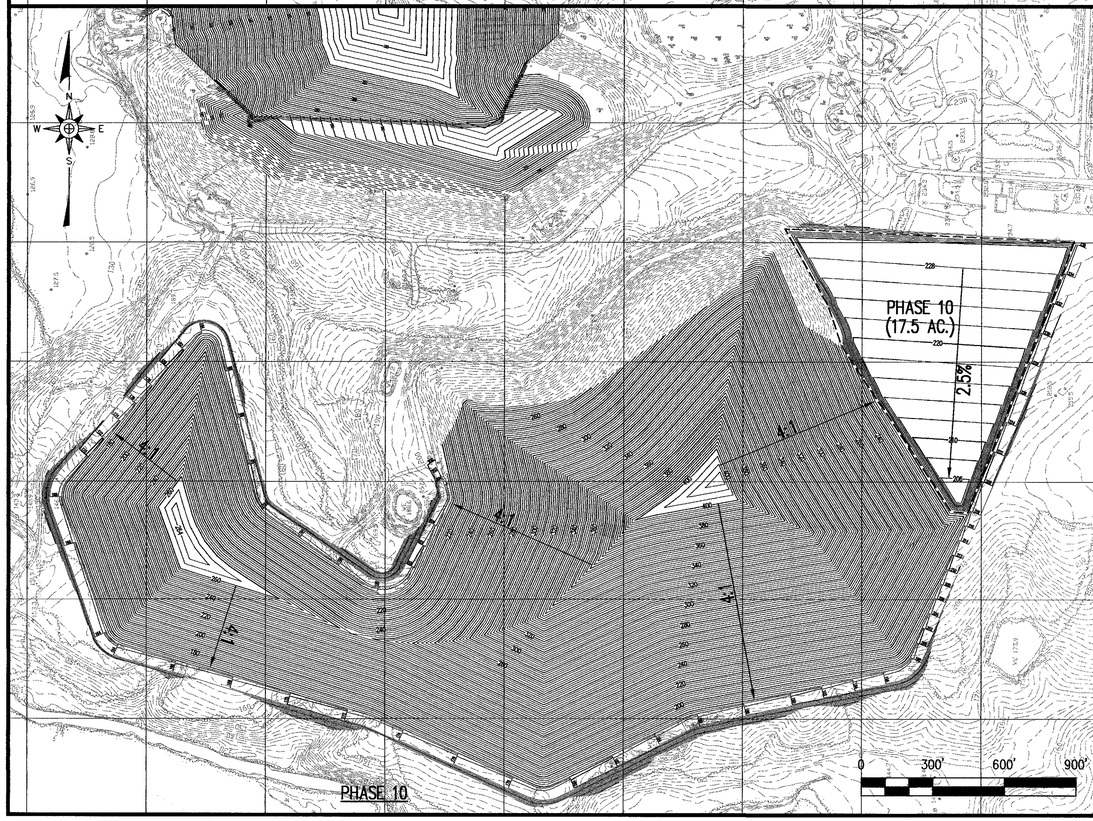

PHASE 10

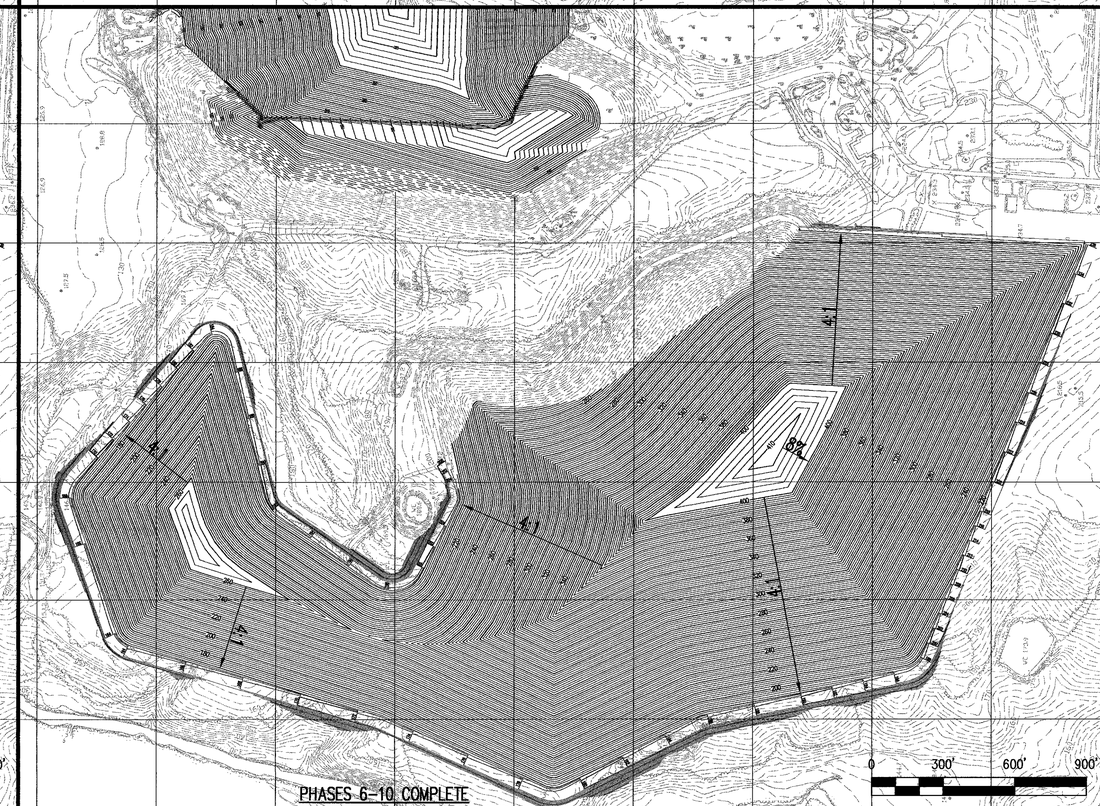

PHASES 6-10 COMPLETE

DATE	NO.	REVISION

G. N. RICHARDSON & ASSOCIATES, INC.
Engineering and Geological Services
14 N. Boylan Ave.
Raleigh, N.C. 27603
ph: 919-828-0577
fax: 919-828-3899
www.gnra.com

SEAL

PROJECT TITLE:
JOHNSTON COUNTY C&D LANDFILL
AREA 2
PERMIT DRAWINGS

DRAWING TITLE:
MSW LANDFILL PHASING PLAN
(SHEET 2 OF 2)

DESIGNED BY: P.K.S.	DRAWN BY: J.A.L.
CHECKED BY:	PROJECT NO.: JOHN-22
SCALE: AS SHOWN	DATE: OCT. 2005
FILE NAME: JOHN-D0369	
SHEET NO. 25	DRAWING NO. P3

G:\CADD\Johnston\John-22\sheets\JOHN-D0369.dwg, 10/3/2005 10:09:18 AM

Attachment B

CQA Manual

Permit Amendment Application
Johnston County C&D Landfill – Area 2 (Permit No. 51-03)

Construction Quality Assurance Manual

Johnston County Landfill
Smithfield, North Carolina

Prepared for:

Johnston County Department of Public Utilities
Smithfield, NC

June 2007

RICHARDSON SMITH GARDNER & ASSOCIATES
Engineering and Geological Services
14 N. Boylan Avenue
Raleigh, North Carolina 27603

JOHNSTON COUNTY LANDFILL

CONSTRUCTION QUALITY ASSURANCE MANUAL

TABLE OF CONTENTS

Page

1.0 GENERAL

1.1 Introduction 1.0-1
1.2 Definitions Relating to Construction Quality 1.0-1
1.2.1 Construction Quality Assurance (CQA) 1.0-1
1.2.2 Construction Quality Control (CQC) 1.0-2
1.2.3 CQA Certification Document 1.0-2
1.2.4 Discrepancies Between Documents 1.0-2
1.3 Parties to Construction Quality Assurance 1.0-2
1.3.1 Description of the Parties 1.0-2
1.3.1.1 Owner 1.0-2
1.3.1.2 Engineer 1.0-2
1.3.1.3 Contractor 1.0-3
1.3.1.4 Geosynthetics Manufacturer 1.0-3
1.3.1.5 Geosynthetics Installer 1.0-3
1.3.1.6 CQA Engineer 1.0-3
1.3.1.7 Geosynthetics CQA Laboratory 1.0-3
1.3.1.8 Soils CQA Laboratory 1.0-4
1.3.2 Qualifications of the Parties 1.0-4
1.3.2.1 Contractor 1.0-4
1.3.2.2 Geosynthetics Manufacturers 1.0-4
1.3.2.3 Geosynthetic Installer(s) 1.0-4
1.3.2.4 CQA Engineer 1.0-4
1.3.2.5 Geosynthetics CQA Laboratory 1.0-5
1.3.2.6 Soils CQA Laboratory 1.0-5
1.4 Scope of Construction Quality Assurance Manual 1.0-5
1.5 Units 1.0-5
1.6 References 1.0-5
1.7 CQA Meetings 1.0-5
1.7.1 Soil Liner CQA Meeting 1.0-6
1.7.2 Geosynthetics CQA Meeting 1.0-6
1.7.3 CQA Progress Meetings 1.0-6
1.7.4 Problem or Work Deficiency Meetings 1.0-7
1.8 Control Versus Record Testing 1.0-7
1.8.1 Control Testing 1.0-7
1.8.2 Record Testing 1.0-7

Table of Contents (Continued)

Page

2.0 CQA DOCUMENTATION

2.1 Documentation 2.0-1
2.2 Daily CQA Report 2.0-1
2.3 CQA Progress Reports 2.0-2
2.4 CQA Photographic Reporting 2.0-2
2.5 Deficiencies 2.0-3
2.6 Design And/Or Project Technical Specification Changes 2.0-3
2.7 Final CQA Report 2.0-3
2.8 Storage of Records 2.0-4

3.0 EARTHWORK CQA

3.1 Introduction 3.0-1
3.2 Embankment Material Approval 3.0-1
3.2.1 Control Tests 3.0-1
3.3 Subgrade Approval 3.0-1
3.4 Earthwork Construction 3.0-1
3.4.1 Construction Monitoring 3.0-1
3.4.2 Control Tests 3.0-2
3.4.3 Record Tests 3.0-2
3.4.3.1 Record Test Failure 3.0-2
3.4.4 Judgmental Testing 3.0-2
3.5 Deficiencies 3.0-2

4.0 SOIL LINER CQA

4.1 Introduction 4.0-1
4.2 Soil Liner Material Approval 4.0-1
4.2.1 Control Tests 4.0-1
4.3 Subgrade Approval 4.0-1
4.4 Test Fill Construction 4.0-1
4.4.1 Control Tests 4.0-2
4.4.2 Record Tests 4.0-2
4.4.3 Test Fill Completion 4.0-2
4.5 Soil Liner Construction 4.0-2
4.5.1 Construction Monitoring 4.0-2
4.5.2 Control Tests 4.0-3
4.5.3 Record Tests 4.0-3
4.5.3.1 Record Test Failure 4.0-3
4.5.4 Judgmental Testing 4.0-4
4.5.5 Perforations in Soil Liner 4.0-4
4.6 Deficiencies 4.0-4

Table of Contents (Continued)

Page

5.0 GEOMEMBRANE CQA

5.1 Introduction 5.0-1
5.2 Geomembrane Manufacturer And Installer Approval 5.0-1
5.3 Geomembrane Material Approval 5.0-1
5.3.1 Geomembrane Product Data 5.0-1
5.3.2 Shipment and Storage 5.0-1
5.3.3 Quality Control Certificates 5.0-1
5.3.4 Material Control Tests 5.0-1
5.3.4.1 Material Control Test Failure 5.0-2
5.4 Geomembrane Installation 5.0-2
5.4.1 Handling 5.0-2
5.4.2 Earthwork 5.0-2
5.4.2.1 Surface Preparation 5.0-2
5.4.2.2 Anchorage System 5.0-3
5.4.3 Geomembrane Placement 5.0-3
5.4.3.1 Field Panel Identification 5.0-3
5.4.3.2 Field Panel Placement 5.0-3
5.4.3.2.1 Location 5.0-3
5.4.3.2.2 Installation Schedule 5.0-3
5.4.3.2.3 Placement of Geomembrane 5.0-4
5.4.3.2.4 Damage 5.0-4
5.4.4 Field Seaming 5.0-4
5.4.4.1 Seam Layout 5.0-4
5.4.4.2 Requirements of Personnel 5.0-4
5.4.4.3 Seaming Equipment and Products 5.0-5
5.4.5 Field Seam Control Tests 5.0-5
5.4.5.1 Trial Seams 5.0-5
5.4.6 Field Seam Record Tests 5.0-5
5.4.6.1 Nondestructive Seam Continuity Testing 5.0-5
5.4.6.2 Field Destructive Seam Testing 5.0-6
5.4.6.3 Geosynthetics CQA Laboratory Destructive Testing 5.0-6
5.4.6.4 Field Seam Record Test Failure 5.0-7
5.4.6.5 Defining Extent of Field Seam Record Test Failure 5.0-7
5.4.7 Repairs and Verification 5.0-7
5.4.7.1 Repair Procedures 5.0-7
5.4.7.2 Repair Verification 5.0-8
5.5 Liner System Acceptance 5.0-8
5.6 Materials in Contact with Geomembranes 5.0-8
5.6.1 Soils 5.0-9
5.6.2 Sumps and Appurtenances 5.0-9
5.7 Deficiencies 5.0-9

Table of Contents (Continued)

Page

6.0 LEACHATE MANAGEMENT SYSTEM CQA

6.1 Introduction 6.0-1
6.2 Leachate Management System Material Approval 6.0-1
6.2.1 Coarse Aggregate (Drainage Aggregate) 6.0-1
6.2.2 Leachate Collection Media (Drainage Aggregate) 6.0-1
6.2.3 High Density Polyethylene (HDPE) Pipe 6.0-2
6.2.4 Geotextiles 6.0-2
6.2.5 Drainage Geocomposite 6.0-2
6.2.6 Protective Cover 6.0-2
6.2.7 Geosynthetic Rain Cover 6.0-2
6.2.8 Sumps/Manholes/Leachate Storage 6.0-2
6.2.9 Valves 6.0-2
6.3 Leachate Management System Installation 6.0-3
6.3.1 Leachate Collection System (LCS) 6.0-3
6.3.2 Leachate Transmission and Storage System 6.0-3
6.4 Deficiencies 6.0-3

7.0 GEOTEXTILE CQA

7.1 Introduction 7.0-1
7.2 Geotextile Material Approval 7.0-1
7.2.1 Geotextile Product Data 7.0-1
7.2.2 Shipment and Storage 7.0-1
7.2.3 Quality Control Certificates 7.0-1
7.2.4 Geotextile Material Control Tests 7.0-1
7.2.4.1 Material Control Test Failure 7.0-2
7.3 Geotextile Installation 7.0-2
7.3.1 Handling and Placement 7.0-2
7.3.2 Seams and Overlaps 7.0-2
7.3.3 Repairs 7.0-2
7.3.4 Placement of Overlying Materials 7.0-2
7.4 Deficiencies 7.0-3

8.0 DRAINAGE GEOCOMPOSITE CQA

8.1 Introduction 8.0-1
8.2 DGC Material Approval 8.0-1
8.2.1 DGC Product Data 8.0-1
8.2.2 Shipment and Storage 8.0-1
8.2.3 Quality Control Certificates 8.0-1
8.2.4 DGC Material Control Tests 8.0-1
8.2.4.1 Material Control Test Failure 8.0-2

Table of Contents (Continued)

Page

8.3 DGC Installation 8.0-2
8.3.1 Handling and Placement 8.0-2
8.3.2 Stacking and Joining 8.0-2
8.3.3 Repairs 8.0-2
8.3.4 Placement of Overlying Materials 8.0-3
8.4 Deficiencies 8.0-3

9.0 GEOSYNTHETIC CLAY LINER (GCL) CQA
9.1 Introduction 9.0-1
9.2 GCL Manufacturer And Installer Approval 9.0-1
9.3 GCL Material Approval 9.0-1
9.3.1 GCL Product Data 9.0-1
9.3.2 Shipment and Storage 9.0-1
9.3.3 Quality Control Certificates 9.0-1
9.3.4 GCL Material Control Tests 9.0-1
9.3.4.1 Material Control Test Failure 9.0-2
9.4 GCL Installation 9.0-2
9.4.1 Handling and Placement 9.0-2
9.4.2 Seams and Overlaps 9.0-2
9.4.3 Repairs 9.0-2
9.4.4 Placement of Overlying Materials 9.0-3
9.5 Deficiencies 9.0-3

10.0 FINAL COVER SYSTEM CQA
10.1 Introduction 10.0-1
10.2 Final Cover System Material Approval 10.0-1
10.2.1 High Density Polyethylene (HDPE) Pipe 10.0-1
10.2.2 Polyvinyl Chloride (PVC) Pipe 10.0-1
10.2.3 Corrugated Polyethylene (CPE) Pipe 10.0-1
10.2.4 Landfill Gas (LFG) System Components 10.0-1
10.2.5 Aggregates 10.0-1
10.2.6 Geomembrane 10.0-2
10.2.7 Geotextiles 10.0-2
10.2.8 Drainage Geocomposite 10.0-2
10.2.9 Vegetative Soil Layer 10.0-2
10.3 Final Cover System Installation 10.0-2
10.4 Deficiencies 10.0-3

APPENDICES
Appendix A Reference List of Test Methods

SECTION 1.0
GENERAL

1.1 INTRODUCTION

This Construction Quality Assurance (CQA) Manual has been prepared to provide the Owner, (Design) Engineer, and CQA Engineer the means to govern the construction quality and to satisfy landfill certification requirements under current solid waste management regulations.

More specifically, this CQA Manual addresses the soils and geosynthetics components of the liner, leachate management, and the final cover systems (as applicable) for both the MSW and C&D landfill units at the facility.

The CQA Manual is divided into the following sections:

- Section 1.0 General
- Section 2.0 CQA Documentation
- Section 3.0 Earthwork CQA
- Section 4.0 Soil Liner CQA
- Section 5.0 Geomembrane CQA
- Section 6.0 Leachate Management System CQA
- Section 7.0 Geotextile CQA
- Section 8.0 Drainage Geocomposite CQA
- Section 9.0 Geosynthetic Clay Liner CQA
- Section 10.0 Final Cover System CQA

1.2 DEFINITIONS RELATING TO CONSTRUCTION QUALITY

1.2.1 Construction Quality Assurance (CQA)

In the context of this Manual, Construction Quality Assurance is defined as a planned and systematic program employed by the Owner to assure conformity of the liner, leachate management, and final cover systems installation with the project drawings and the project specifications. CQA is provided by the CQA Engineer as a representative of the Owner and is independent from the Contractor and all manufacturers. The CQA program is designed to provide adequate confidence that items or services meet contractual and regulatory requirements and will perform satisfactorily in service.

1.2.2 Construction Quality Control (CQC)

Construction Quality Control refers to actions taken by manufacturers, fabricators, installers, and/or the Contractor to ensure that the materials and the workmanship meet the requirements of the project drawings and the project specifications. The manufacturer's specifications and quality control (QC) requirements are included in this CQA Manual by

reference only. A complete updated version of each geosynthetic component manufacturer's QC Plan shall be incorporated as part of the Contractor's CQC Plan.

1.2.3 CQA Certification Document

At the completion of construction, a certification document will be prepared by the CQA Engineer and submitted to State Solid Waste Regulators. The certification report will include all QC testing performed by the Geosynthetics Manufacturers, all CQC testing performed by the Geosynthetic Installers, and all CQA testing performed by the CQA Engineer.

1.2.4 Discrepancies Between Documents

The Contractor is instructed to bring discrepancies to the attention of the CQA Engineer who shall then notify the Engineer for resolution. The Engineer has the sole authority to determine resolution of discrepancies existing within the Contract Documents (this may also require the approval of State Solid Waste Regulators). Unless otherwise determined by the Engineer, the more stringent requirement shall be the controlling resolution.

1.3 PARTIES TO CONSTRUCTION QUALITY ASSURANCE

1.3.1 Description of the Parties

The parties to Construction Quality Assurance and Quality Control include the Owner, Engineer, Contractor, Geosynthetics Manufacturer, Geosynthetics Installer, CQA Engineer, Geosynthetics CQA Laboratory, and Soils CQA Laboratory.

1.3.1.1 Owner

The Owner is Johnston County, who owns and/or is responsible for the facility.

1.3.1.2 Engineer

The Engineer is responsible for the engineering design, drawings, and project specifications for the liner, leachate management, and final cover systems. The Engineer is an official representative of the Owner. The Engineer serves as communications coordinator for the project, initiating the meetings outlined in **Section 1.7**. The Engineer will also be responsible for proper resolution of all quality issues that arise during construction. The Engineer is Richardson Smith Gardner & Associates, Inc.

1.3.1.3 Contractor

The Contractor is responsible for the construction of the subgrade, earthwork, and for placement of the liner, leachate management, and final cover systems. The

Contractor is responsible for the overall CQC on the project and coordination of submittals to the CQA Engineer. Additional responsibilities of the Contractor are defined by the project specifications.

1.3.1.4 Geosynthetics Manufacturer

The Geosynthetics Manufacturer(s) is (are) responsible for the production of the geosynthetic components used in landfill construction. The Manufacturer(s) is (are) responsible for Quality Control (QC) during manufacture of the geosynthetic components, certification of the properties of the geosynthetic components, and field installation criteria.

1.3.1.5 Geosynthetics Installer

The Geosynthetics Installer(s) is (are) routinely a subcontractor of the Contractor and is (are) responsible for field handling, storing, placing, seaming, protection of (against wind, etc.), and other aspects of the geosynthetics installations. The Installer may also be responsible for transportation of these materials to the site, and for the preparation and completion of anchor trenches.

1.3.1.6 CQA Engineer

The CQA Engineer is a representative of the Owner, is independent from the Contractor, and is responsible for observing, testing, and documenting activities related to the CQA of the earthworks at the site, and the installation of the soil and geosynthetic components of the liner, leachate management, and final cover systems. The CQA Engineer may make field observations and review submittals for the Engineer and is responsible for notifying the Owner and Engineer of all quality issues that arise during construction. The CQA Engineer is also responsible for issuing a facility certification report, sealed by a Professional Engineer registered in The State of North Carolina.

1.3.1.7 Geosynthetics CQA Laboratory

The Geosynthetics CQA Laboratory is a party, independent from the Owner, that is responsible for conducting tests on conformance samples of geosynthetics used in the liner, leachate management, and final cover systems. The Geosynthetics CQA Laboratory service cannot be provided by any party involved with the manufacture, fabrication, or installation of any of the geosynthetic components. The services of the Geosynthetics CQA Laboratory are coordinated by the CQA Engineer and are paid for by the Owner.

1.3.1.8 Soils CQA Laboratory

The Soils CQA Laboratory is a party, independent from the Owner, that is responsible for conducting geotechnical tests on conformance samples of soils and aggregates used in structural fills and the liner, leachate management, and final cover systems. The services of the Soils CQA Laboratory are coordinated by the CQA Engineer and are paid for by the Owner.

1.3.2 Qualifications of the Parties

The following qualifications are required of all parties involved with the manufacture, fabrication, installation, transportation, and CQA of all materials for the liner, leachate management, and final cover systems. Where applicable, these qualifications must be submitted by the Contractor to the Owner and Engineer for review and approval.

1.3.2.1 Contractor

Qualifications of the Contractor are specific to the construction contract and independent of this CQA Manual.

1.3.2.2 Geosynthetics Manufacturers

Each Geosynthetics Manufacturer must satisfy the qualifications presented in the project specifications.

1.3.2.3 Geosynthetic Installer(s)

The Geosynthetic Installer(s) will be trained and qualified to install the geosynthetics components of the liner, leachate management, and final cover systems. Each Geosynthetics Installer must meet the requirements of the project specifications and be approved by the Engineer.

1.3.2.4 CQA Engineer

The CQA Engineer will act as the Owner's Quality Assurance Representative. The CQA Engineer will perform CQA testing to satisfy the requirements of this CQA Manual and will prepare the CQA certification document. The CQA Engineer will have experience in the CQA aspects of the construction and testing of landfill liner, leachate management, and final cover systems, and be familiar with ASTM and other related industry standards. The activities of the CQA Engineer will be performed under the supervision of a Registered Professional Engineer.

1.3.2.5 Geosynthetics CQA Laboratory

The Geosynthetics CQA Laboratory should be certified by the Geosynthetics Accreditation Institute, will have experience in testing geosynthetics, and be familiar with ASTM, GRI, and other applicable test standards. The Geosynthetics CQA Laboratory will be capable of providing test results within 24 hours or a reasonable time after receipt of samples depending on the test(s) to be conducted, as agreed to at the outset of the project by affected parties, and will maintain that standard throughout the installation.

1.3.2.6 Soils CQA Laboratory

The Soils CQA Laboratory will have experience in testing structural fills, soil liners, and aggregates, and be familiar with ASTM and other applicable test standards. The Soils CQA Laboratory will be capable of providing test results within 24 hours or a reasonable time after receipt of samples depending on the test(s) to be conducted, as agreed to at the outset of the project by affected parties, and will maintain that standard throughout the installation.

1.4 SCOPE OF CONSTRUCTION QUALITY ASSURANCE MANUAL

The scope of this CQA Manual includes the CQA of the soils and geosynthetic components of the liner, leachate management, and final cover systems for the subject facility. The CQA for the selection, evaluation, and placement of the soils is included in the scope.

1.5 UNITS

In this CQA Manual, all properties and dimensions are expressed in U.S. units.

1.6 REFERENCES

The CQA Manual includes references to the most recent version of the test procedures of the American Society of Testing and Materials (ASTM) and/or the Geosynthetic Research Institute (GRI). **Appendix A** contains a list of these procedures.

1.7 CQA MEETINGS

To facilitate the specified degree of quality during installation, clear, open channels of communication are essential. To that end, meetings are critical.

1.7.1 Soil Liner CQA Meeting

Prior to the start of the soil liner system construction a CQA Meeting will be held. This meeting will include all parties then involved, including the Engineer, the CQA Engineer, and the Contractor.

The purpose of this meeting is to begin planning for coordination of tasks, anticipate any problems which might cause difficulties and delays in construction, and, above all, review the CQA Manual to all of the parties involved. It is very important that the rules regarding testing, repair, etc., be known and accepted by all.

This meeting should include all of the activities referenced in the project specifications.

The meeting will be documented by the Engineer and minutes will be transmitted to all parties. The Soil Liner CQA Meeting and the Geosynthetics CQA Meeting may be held as one meeting or separate meetings, depending on the direction of the Engineer.

1.7.2 Geosynthetics CQA Meeting

A CQA Meeting will be held at the site prior to placement of the geosynthetics. At a minimum, the meeting will be attended by the Engineer, the CQA Engineer, the Contractor, and the Geosynthetic Installation Superintendent(s).

The purpose of this meeting is to begin planning for coordination of tasks, anticipate any problems which might cause difficulties and delays in construction, and, above all, review the CQA Manual to all of the parties involved. It is very important that the rules regarding testing, repair, etc., be known and accepted by all.

This meeting should include all of the activities referenced in the project specifications.

The meeting will be documented by the Engineer and minutes will be transmitted to all parties. The Soil Liner CQA Meeting and the Geosynthetics CQA Meeting may be held as one meeting or separate meetings, depending on the direction of the Engineer.

1.7.3 CQA Progress Meetings

Progress meetings will be held between the Engineer, the CQA Engineer, the Contractor, the Geosynthetic Installation Superintendent(s), and representatives from any other involved parties at the frequency dictated in the project specifications or, at a minimum, once per month during active construction. These meetings will discuss current progress, planned activities for the next week, and any new business or revisions to the work. The CQA Engineer will log any problems, decisions, or questions arising at this meeting in his daily or periodic reports. Any matter requiring action which is raised in this meeting will be reported to the appropriate parties. These meetings will be documented by the Engineer and minutes will be transmitted to affected parties.

1.7.4 Problem or Work Deficiency Meetings

A special meeting will be held when and if a problem or deficiency is present or likely to occur. At a minimum, the meeting will be attended by the Engineer, the CQA Engineer,

the Contractor, and representatives from any other involved parties. The purpose of the meeting is to define and resolve the problem or work deficiency as follows:

- define and discuss the problem or deficiency;
- review alternative solutions; and
- implement an action plan to resolve the problem or deficiency.

The meeting will be documented by the Engineer and minutes will be transmitted to affected parties.

1.8 CONTROL VERSUS RECORD TESTING

1.8.1 Control Testing

In the context of this CQA Manual, Control Tests are those tests performed on a material prior to its actual use in construction to demonstrate that it can meet the requirements of the project plans and specifications. Control Test data may be used by the Engineer as the basis for approving alternative material sources.

1.8.2 Record Testing

Record Tests are those tests performed during the actual placement of a material to demonstrate that its in-place properties meet or exceed the requirements of the project drawings and specifications.

SECTION 2.0
CQA DOCUMENTATION

2.1 DOCUMENTATION

An effective CQA plan depends largely on recognition of construction activities that should be monitored and on assigning responsibilities for the monitoring of each activity. This is most effectively accomplished and verified by the documentation of quality assurance activities. The CQA Engineer will document that quality assurance requirements have been addressed and satisfied.

The CQA Engineer will provide the Owner and Engineer with his daily and weekly progress reports including signed descriptive remarks, data sheets, and logs to verify that required CQA activities have been carried out. These reports will also identify potential quality assurance problems. The CQA Engineer will also maintain at the job site a complete file of project drawings, reports, project specifications, a CQA Manual, checklists, test procedures, daily logs, and other pertinent documents.

2.2 DAILY CQA REPORT

The CQA Engineer's reporting procedures will include preparation of a daily report which, at a minimum, will include the following information, where applicable:

- a unique identifying sheet number for cross referencing and document control;
- date, project name, location, and other identification;
- data on weather conditions;
- a reduced-scale Site Plan showing all proposed work areas and test locations;
- descriptions and locations of ongoing construction;
- descriptions and specific locations of areas, or units, of work being tested and/or observed and documented;
- locations where tests and samples were taken;
- a summary of test results;
- calibrations or recalibrations of test equipment, and actions taken as a result of recalibration;
- off-site materials received, including quality verification documentation;

- decisions made regarding acceptance of units of work, and/or corrective actions to be taken in instances of substandard quality;

- summaries of pertinent discussions with the Contractor and/or Geosynthetic Installers; and

- the CQA Engineer's signature.

The daily report must be completed at the end of each CQA Engineer's shift, prior to leaving the site. This information will be submitted weekly to and reviewed by the Owner and Engineer.

2.3 CQA PROGRESS REPORTS

The CQA Engineer will prepare a summary progress report each week, or at time intervals established at the pre-construction meeting. As a minimum, this report will include the following information, where applicable:

- a unique identifying sheet number for cross-referencing and document control;

- the date, project name, location, and other information;

- a summary of work activities during the progress reporting period;

- a summary of construction situations, deficiencies, and/or defects occurring during the progress reporting period;

- summary of all test results, failures and retests, and

- signature of the CQA Engineer.

The CQA Engineer's progress reports must summarize the major events that occurred during that week. Critical problems that occur shall be communicated verbally to the Engineer immediately as well as being included in the weekly reports. The CQA Engineer's weekly report must be submitted to the Owner and Engineer no later than the Monday following the week reported.

2.4 CQA PHOTOGRAPHIC REPORTING

Photographs will be taken by the CQA Engineer at regular intervals during the construction process and in all areas deemed critical by the CQA Engineer.

These photographs will serve as a pictorial record of work progress, problems, and mitigation activities. These records will be presented to the Engineer upon completion of the project.

In lieu of photographic documentation, videotaping may be used to record work progress,

problems, and mitigation activities. The Engineer may require that a portion of the documentation be recorded by photographic means in conjunction with videotaping.

2.5 DEFICIENCIES

The Owner and Engineer will be made aware of any significant recurring nonconformance with the project specifications. The Engineer will then determine the cause of the non-conformance and recommend appropriate changes in procedures or specification. When this type of evaluation is made, the results will be documented, and any revision to procedures or project specifications will be approved by the Owner and Engineer.

2.6 DESIGN AND/OR PROJECT TECHNICAL SPECIFICATION CHANGES

Design and/or project specification changes may be required during construction. In such cases, the CQA Engineer will notify the Engineer. The Engineer will then notify the appropriate agency, if necessary.

Design and/or project specification changes will be made only with the written agreement of the Engineer, and will take the form of an addendum to the project specifications. All design changes will include a detail (if necessary) and state which detail it replaces in the plans.

2.7 FINAL CQA REPORT

At the completion of each major construction activity at the landfill unit, the CQA Engineer will certify all required forms, observation logs, field and laboratory testing data sheets including sample location plans, etc. The CQA Engineer will also provide a final report which will certify that the work has been performed in compliance with the plans and project technical specifications, and that the supporting documents provide the necessary information.

The CQA Engineer will also provide summaries of all the data listed above with the report. The Record Drawings will include scale drawings depicting the location of the construction and details pertaining to the extent of construction (e.g., depths, plan dimensions, elevations, soil component thicknesses, etc.). All surveying and base maps required for development of the Record Drawings will be done by the Contractor's Construction Surveyor. These documents will be certified by the Contractor and delivered to the CQA Engineer and included as part of the final CQA (Certification) report.

It may be necessary to prepare interim certifications, as allowed by the regulatory agency to expedite completion and review.

At a minimum, the items shown in **Table 2.1** will be included in the Final CQA Report. Note that some items may not be applicable to all projects.

2.8 STORAGE OF RECORDS

All handwritten data sheet originals, especially those containing signatures, will be stored by the CQA Engineer in a safe repository on site. Other reports may be stored by any standard method which will allow for easy access. All written documents will become property of the Owner.

TABLE 2.1A: FINAL CQA REPORT GENERAL OUTLINE (LINER SYSTEM)

1.0 Introduction
2.0 Project Description
3.0 CQA Program
  3.1 Scope of Services
  3.2 Personnel
4.0 Earthwork CQA
5.0 Soil Liner CQA
6.0 GCL CQA
7.0 Geomembrane CQA
8.0 Leachate Management System CQA
9.0 Geotextile CQA
10.0 Drainage Geocomposite CQA
11.0 Summary and Conclusions
12.0 Project Certification

Appendices

Appendix A Design Clarifications and Modifications
Appendix B Piezometer Abandonment (if applicable)
Appendix C Geophysical Investigation (if applicable)
Appendix D Photographic Documentation
Appendix E CQA Reporting
  E1. CQA Reports
  E2. CQA Meeting Minutes
Appendix F Earthwork CQA Data
  F1. CQA Test Results - Control Tests
  F2. CQA Test Results - Record Tests
Appendix G Soil Liner CQA Data
  G1. CQA Test Results - Control Tests
  G2. CQA Test Results - Record Tests
Appendix H Interface Shear Strength Test Data
Appendix I GCL CQA Data
  I1. Manufacturer's Product Data Submittals and Quality Control Certificates
  I2. Geosynthetics Inventory - GCL
  I3. CQA Test Results - Material Control Tests
  I4. GCL Installation Certification

TABLE 2.1A (CONTINUED):

Appendix J	Geomembrane CQA Data	
	J1.	Manufacturer's Product Data Submittals and Quality Control Certificates
	J2.	Geosynthetics Inventory - Geomembrane(s)
	J3.	CQA Test Results - Material Control Tests
	J4.	Subgrade Acceptance Certificates
	J5.	Trial Seam Logs
	J6.	Panel Placement Logs
	J7.	Panel Seaming Logs
	J8.	CQC Test Results - Nondestructive Seam Testing Report Forms
	J9.	CQC Test Results - Destructive Seam Testing Report Forms (Field)
	J10.	CQA Test Results - Destructive Seam Testing Report Forms (Laboratory)
	J11.	Repair Logs
	J12.	Geomembrane Installation Certification
Appendix K	Leachate Management System CQA Data	
	K1.	Manufacturer's Product Data Submittals and Quality Control Certificates
	K2.	CQA Test Results - Drainage Aggregate
	K3.	CQA Test Results - Protective Cover
	K4.	CQC Test Results - Pressure Testing of HDPE Transmission Piping
	K5.	Documentation of Pump Start Up
Appendix L	Geotextile CQA Data	
	L1.	Manufacturer's Product Data Submittals and Quality Control Certificates
	L2.	Geosynthetics Inventory - Geotextiles
	L3.	CQA Test Results - Material Control Tests
Appendix M	Drainage Geocomposite CQA Data	
	M1.	Manufacturer's Product Data Submittals and Quality Control Certificates
	M2.	Geosynthetics Inventory - Drainage Geocomposite
	M3.	CQA Test Results - Material Control Tests
Appendix N	Record Drawings	
	N1.	Subgrade As-Built
	N2.	Soil Liner As-Built
	N3.	Geomembrane As-Built(s)
	N4.	Leachate Collection Media As-Built
	N5.	HDPE Pipe As-Built
	N6.	Protective Cover As-Built

TABLE 2.1B: FINAL CQA REPORT GENERAL OUTLINE (FINAL COVER SYSTEM)

1.0 Introduction
2.0 Project Description
3.0 CQA Program
    3.1 Scope of Services
    3.2 Personnel
4.0 Earthwork CQA
5.0 Final Cover System CQA
6.0 Geomembrane CQA
7.0 Geotextile CQA
8.0 Drainage Geocomposite CQA
9.0 Summary and Conclusions
10.0 Project Certification

Appendices

Appendix A Design Clarifications/Modifications
Appendix B Photographic Documentation
Appendix C CQA Reporting
    C1. CQA Reports
    C2. CQA Meeting Minutes
Appendix D Earthwork CQA Data
    D1. CQA Test Results - Control Tests
    D2. CQA Test Results - Record Tests
Appendix E Final Cover System CQA Data
    E1. Manufacturer's Product Data Submittals and Quality Control Certificates
    E2. CQA Test Results - Drainage Aggregate
    E3. CQA Test Results - Vegetative Soil Layer
    E4. CQC Test Results - Pressure Testing of HDPE Piping
Appendix F Interface Shear Strength Test Data
Appendix G Geomembrane CQA Data
    G1. Manufacturer's Product Data Submittals and Quality Control Certificates
    G2. Geosynthetics Inventory - Geomembrane
    G3. CQA Test Results - Material Control Tests
    G4. Subgrade Acceptance Certificates
    G5. Trial Seam Logs
    G6. Panel Placement Logs
    G7. Panel Seaming Logs
    G8. CQC Test Results - Nondestructive Seam Testing Report Forms
    G9. CQC Test Results - Destructive Seam Testing Report Forms (Field)
    G10. CQA Test Results - Destructive Seam Testing Report Forms (Laboratory)
    G11. Repair Logs
    G12. Geomembrane Installation Certification

TABLE 2.1B (CONTINUED):

Appendix H	Geotextile CQA Data	
	H1.	Manufacturer's Product Data Submittals and Quality Control Certificates
	H2.	Geosynthetics Inventory - Geotextiles
	H3.	CQA Test Results - Material Control Tests
Appendix I	Drainage Geocomposite CQA Data	
	I1.	Manufacturer's Product Data Submittals and Quality Control Certificates
	I2.	Geosynthetics Inventory - Drainage Geocomposite
	I3.	CQA Test Results - Material Control Tests
Appendix J	Record Drawings	
	J1	Subgrade As-Built
	J2	Geomembrane As-Built
	J3	HDPE Pipe As-Built
	J4	Vegetative Soil Layer As-Built

SECTION 3.0
EARTHWORK CQA

3.1 INTRODUCTION

This section of the CQA Manual addresses earthwork (excavation and embankment) and outlines the soils CQA program to be implemented with regard to material approval, subgrade approval, field control and record tests, and resolution of problems.

3.2 EMBANKMENT MATERIAL APPROVAL

All material to be used as compacted embankment shall be approved in advance by the CQA Engineer. Approval is based upon successful completion of CQA control testing outlined below. Such testing can be performed either during excavation and stockpiling or from existing stockpiles prior to use.

3.2.1 Control Tests

The procedure for CQA testing during excavation and stockpiling (including existing stockpiles) is outlined below.

Each load of soil will be examined either at the borrow source or the stockpile area. Any unsuitable material will be rejected or routed to separate stockpiles consistent with its end use. Appropriate entries will be made in the daily log.

During stockpiling operations, control tests, as shown on **Table 3.1**, will be performed by the CQA Engineer prior to placement of any compacted embankment.

3.3 SUBGRADE APPROVAL

The CQA Engineer will verify that the compacted embankment subgrade is constructed in accordance with the project specifications.

3.4 EARTHWORK CONSTRUCTION

3.4.1 Construction Monitoring

A. Earthwork shall be performed as described in the project specifications.

B. Only soil previously approved by the CQA Engineer (see **Section 3.2**) shall be used in construction of the compacted embankment. Unsuitable material will be removed prior to acceptance by the CQA Engineer.

C. All required field density and moisture content tests shall be completed before the overlying lift of soil is placed. The surface preparation (e.g. wetting, drying,

scarification, etc.) shall be completed before the CQA Engineer will allow placement of subsequent lifts.

D. The CQA Engineer will monitor protection of the earthwork during and after construction.

3.4.2 Control Tests

The control tests, as shown on **Table 3.2**, will be performed by the CQA Engineer prior to placement of compacted embankment.

3.4.3 Record Tests

The record tests, as shown on **Table 3.2**, will be performed by the CQA Engineer during placement of compacted embankment.

3.4.3.1 Record Test Failure

Recompaction of the failed area shall be performed and retested until the area meets or exceeds requirements outlined in the specifications.

3.4.4 Judgmental Testing

During construction, the frequency of control and/or record testing may be increased at the discretion of the CQA Engineer when visual observations of construction performance indicate a potential problem. Additional testing for suspected areas will be considered when:

- the rollers slip during rolling operation;
- the lift thickness is greater than specified;
- the fill material is at an improper moisture content;
- fewer than the specified number of roller passes are made;
- dirt-clogged rollers are used to compact the material;
- the rollers may not have used optimum ballast;
- the fill materials differ substantially from those specified; or
- the degree of compaction is doubtful.

3.5 DEFICIENCIES

The CQA Engineer will immediately determine the extent and nature of all defects and deficiencies and report them to the Owner and Engineer. All defects and deficiencies will be documented by the CQA Engineer. The Contractor shall correct defects and deficiencies to the satisfaction of the CQA Engineer. The CQA Engineer will observe all retests on repaired defects.

TABLE 3.1: CQA TESTING PROGRAM FOR EMBANKMENT MATERIAL APPROVAL

PROPERTY	TEST METHOD	MINIMUM TEST FREQUENCY
CONTROL TESTS:		
Visual Classification	ASTM D 2488	Each Soil
Moisture-Density Relationship	ASTM D 698	5,000 CY per Each Soil

TABLE 3.2: CQA TESTING PROGRAM FOR COMPACTED EMBANKMENT

PROPERTY	TEST METHOD	MINIMUM TEST FREQUENCY
CONTROL TESTS: (See **Table 3.1**)		
RECORD TESTS:		
Lift Thickness	-----	Each Lift
In-Place Density	ASTM D 6938[1]	20,000 ft^2 per lift & 1 per 500 LF/lift of Berms (< 200 ft. base width)
Moisture Content	ASTM D 6938[2]	20,000 ft^2 per lift & 1 per 500 LF/lift of Berms (< 200 ft. base width)

Notes:

1. Optionally use ASTM D 1556, ASTM D 2167, or ASTM D 2937. For every 10 nuclear density tests perform at least 1 density test by ASTM D 1556, ASTM D 2167, or ASTM D 2937 as a verification of the accuracy of the nuclear testing device.
2. Optionally use ASTM D 2216, ASTM D 4643, or ASTM D 4959. For every 10 nuclear moisture tests perform at least 1 moisture test by ASTM D 2216, ASTM D 4643, or ASTM D 4959 as a verification of the accuracy of the nuclear testing device.

SECTION 4.0
SOIL LINER CQA

4.1 INTRODUCTION

This section of the CQA Manual addresses the soil liner component of the liner system and outlines the soils CQA program to be implemented with regard to material approval, subgrade approval, test fill construction, field and laboratory control and record tests, and resolution of problems.

4.2 SOIL LINER MATERIAL APPROVAL

All material to be used as soil liner shall be approved in advance by the CQA Engineer. Approval is based upon successful completion of CQA control testing outlined below. Such testing can be performed either during excavation and stockpiling or from existing stockpiles prior to use.

4.2.1 Control Tests

The procedure for CQA testing during excavation and stockpiling (including existing stockpiles) is outlined below.

Each load of soil will be examined either at the borrow source or the stockpile area. Any unsuitable material will be rejected or routed to separate stockpiles consistent with its end use. Appropriate entries will be made in the daily log.

During stockpiling operations, control tests, as shown on **Table 4.1**, will be performed by the CQA Engineer prior to placement of any soil liner material.

4.3 SUBGRADE APPROVAL

The CQA Engineer will verify that the soil liner subgrade is constructed in accordance with the project specifications.

4.4 TEST FILL CONSTRUCTION

A test fill meeting the requirements of the project specifications will be constructed using the same construction methods, equipment, and material to be used for the soil liner component. The test fill construction will be conducted prior to or coincide with the beginning of construction of the soil liner component.

Construction equipment and methods will be reviewed by the CQA Engineer prior to test fill placement.

4.4.1 Control Tests

The control tests, as shown on **Table 4.2**, will be performed by the CQA Engineer prior to placement of soil liner material in the test fill.

4.4.2 Record Tests

The record tests, as shown on **Table 4.2**, will be performed by the CQA Engineer during placement of soil liner material in the test fill.

4.4.3 Test Fill Completion

The test fill program is completed when the Contractor has shown that the soil liner constructed using the same construction methods, equipment, and material to be used in construction of the soil liner will satisfy project specifications. No soil liner can be placed until the test fill program is completed.

4.5 SOIL LINER CONSTRUCTION

4.5.1 Construction Monitoring

A. Soil liner shall be placed as described in the applicable section(s) of the project specifications using the construction methods, equipment, and material demonstrated in the test fill construction.

B. Only soil previously approved by the CQA Engineer (see **Section 4.2**) shall be used in construction of the soil liner. Unsuitable material will be removed prior to acceptance by the CQA Engineer.

C. All required field density and moisture content tests shall be completed before the overlying lift of soil is placed. The surface preparation (e.g. wetting, drying, scarification, etc.) shall be completed before the CQA Engineer will allow placement of subsequent lifts.

D. The CQA Engineer will monitor protection of the soil liner during and after construction.

E. The liner surface shall be sprinkled with water as needed to prevent desiccation. Should desiccation occur, the last lift shall be reconstructed in accordance with the project specifications. Standing water should not be present on the soil liner.

F. Frost heave or other damage due to freezing shall require lift reconstruction in accordance with the project specifications.

G. The CQA Engineer will inspect the soil liner and certify that it is in accordance with

the project specifications and approved plans prior to the Contractor beginning installation of overlying geosynthetics.

H. The finished soil liner shall be free of all rock protrusions. All cracks and voids shall be filled and the surface made uniform. This shall be accomplished by final dressing of the soil liner with smooth-drum rollers and hand raking. No rubber tired vehicles are permitted on the final dressed surface unless authorized by the CQA Engineer.

I. The surface on which the overlying geosynthetics are to be placed shall be maintained in a firm, clean, and smooth condition and shall be within the acceptable moisture range before and during the geosynthetics installation.

4.5.2 Control Tests

The control tests, as shown on **Table 4.3**, will be performed by the CQA Engineer prior to placement of soil liner material.

4.5.3 Record Tests

The record tests, as shown on **Table 4.3** and as described below, will be performed by the CQA Engineer during placement of soil liner material.

A. Each lift will be checked visually for soil clods, rocks, debris, plant materials and other foreign material. Any such material which does not meet specified requirements shall be identified and removed prior to and during the compaction process.

B. The thickness of the loose lift will be measured at random locations after spreading and leveling is completed. Loose lift thickness should not exceed the depth of penetration of the compaction feet.

C. Moisture content will be monitored by the CQA Engineer prior to compaction. If the soil is drier than the specified minimum moisture content, water will be added and the lift will be disced to distribute the moisture evenly.

Results of testing will be certified within 7 days of soil liner placement.

4.5.3.1 Record Test Failure

The following procedures shall be used in the event of density or hydraulic conductivity test failure:

A. Failed Density Test: Recompaction of the failed area shall be performed and retested until the area meets or exceeds requirements outlined in the

specifications.

B. Failed Hydraulic Conductivity Test: The area of failure shall be localized and reconstructed in accordance with the project specifications. This area will be retested as outlined within the plan by the CQA Engineer. Optionally, at least five replicate samples shall be obtained and tested by the Contractor in the immediate vicinity of the failed test. If all five samples pass, then the initial failing test will be discounted. However, should the replicate samples confirm the failure of the soil liner to meet specifications, the area of failure shall be localized, reconstructed, and retested as described above.

4.5.4 Judgmental Testing

During construction, the frequency of control and/or record testing may be increased at the discretion of the CQA Engineer when visual observations of construction performance indicate a potential problem. Additional testing for suspected areas will be considered when:

- the rollers slip during rolling operation;
- the lift thickness is greater than specified;
- the fill material is at an improper moisture content;
- fewer than the specified number of roller passes are made;
- dirt-clogged rollers are used to compact the material;
- the rollers may not have used optimum ballast;
- the fill materials differ substantially from those specified; or
- the degree of compaction is doubtful.

4.5.5 Perforations In Soil Liner

All holes shall be patched with compacted soil liner (if allowed by the project specifications) or sodium bentonite compacted and hydrated in the holes.

4.6 DEFICIENCIES

The CQA Engineer will immediately determine the extent and nature of all defects and deficiencies and report them to the Owner and Engineer. All defects and deficiencies will be documented by the CQA Engineer. The Contractor shall correct defects and deficiencies to the satisfaction of the CQA Engineer. The CQA Engineer will observe all retests on repaired defects.

TABLE 4.1: CQA TESTING PROGRAM FOR SOIL LINER MATERIAL APPROVAL

PROPERTY	TEST METHOD	MINIMUM TEST FREQUENCY
CONTROL TESTS:		
Visual Classification	ASTM D 2488	Each Soil
Moisture Content	ASTM D 2216	2,000 CY per Each Soil
Grain Size Analysis	ASTM D 422	2,000 CY per Each Soil
Atterberg Limits	ASTM D 4318	2,000 CY per Each Soil
Moisture-Density Relationship	ASTM D 698	5,000 CY per Each Soil
Hydraulic Conductivity - Lab Remolded	ASTM D 5084[3]	10,000 CY per Each Soil

TABLE 4.2: CQA TESTING PROGRAM FOR SOIL LINER TEST FILL

PROPERTY	TEST METHOD	MINIMUM TEST FREQUENCY
CONTROL TESTS: (See **Table 4.1**)		
Moisture-Density Relationship	ASTM D 698[4]	1 per lift
Hydraulic Conductivity - Lab Remolded	ASTM D 5084[3,4]	1 per lift
RECORD TESTS:		
Lift Thickness	-----	Each Lift
Atterberg Limits	ASTM D 4318	1 per lift
Grain Size Analysis	ASTM D 422	1 per lift
In-Place Density	ASTM D 2922[1]	3 per lift
Moisture Content	ASTM D 6938[2]	3 per lift
Hydraulic Conductivity - Undisturbed (Shelby Tube)	ASTM D 6938[3]	1 per lift

TABLE 4.3: CQA TESTING PROGRAM FOR SOIL LINER

PROPERTY	TEST METHOD	MINIMUM TEST FREQUENCY
CONTROL TESTS: (See **Table 4.1**)		
RECORD TESTS:		
Lift Thickness	-----	Each Lift
In-Place Density	ASTM D 6938[1]	10,000 ft^2 per lift
Moisture Content	ASTM D 6938[2]	10,000 ft^2 per lift
Hydraulic Conductivity - Undisturbed (Shelby Tube)	ASTM D 5084[3]	80,000 ft^2 per lift

Notes:

1. Optionally use ASTM D 1556, ASTM D 2167, or ASTM D 2937. For every 10 nuclear density tests perform at least 1 density test by ASTM D 1556, ASTM D 2167, or ASTM D 2937 as a verification of the accuracy of the nuclear testing device.
2. Optionally use ASTM D 2216, ASTM D 4643, or ASTM D 4959. For every 10 nuclear moisture tests perform at least 1 moisture test by ASTM D 2216, ASTM D 4643, or ASTM D 4959 as a verification of the accuracy of the nuclear testing device.
3. Maximum effective confining pressure and hydraulic gradient as required by the project specifications. Backpressure as recommended by ASTM D 5084.
4. These tests performed on the test fill may count toward the minimum frequencies established in **Table 4.1**.

SECTION 5.0
GEOMEMBRANE CQA

5.1 INTRODUCTION

This section of the CQA Manual addresses the geomembrane components of the liner and final cover systems and outlines the CQA program to be implemented with regard to manufacturer and installer approval, material approval, subgrade approval, field and laboratory control and record tests, repairs, and resolution of problems.

5.2 GEOMEMBRANE MANUFACTURER AND INSTALLER APPROVAL

The Contractor shall submit the qualifications of the Geomembrane Manufacturer and the Geomembrane Installer, as described in the specifications, to the CQA Engineer for approval.

5.3 GEOMEMBRANE MATERIAL APPROVAL

5.3.1 Geomembrane Product Data

The CQA Engineer will review the Contractor's submittals for conformance with the project specifications.

5.3.2 Shipment And Storage

During shipment and storage, all geomembrane will be protected as required by the project specifications. The CQA Engineer will observe rolls upon delivery at the site.

5.3.3 Quality Control Certificates

Upon delivery, the CQA Engineer will:

- verify that the Manufacturer's quality control certificates have been provided at the specified frequency and that each certificate identified the rolls or sheets related to it; and

- review the Manufacturer's quality control certificates and verify that the certified properties meet the project technical specifications.

5.3.4 Material Control Tests

Samples for material control tests, as shown on **Table 5.1**, will be obtained by the CQA Engineer at the indicated frequencies upon delivery of the geomembrane. Alternatively, samples may be randomly obtained at the manufacturing site by the CQA Engineer or representatives of the Geosynthetics CQA Laboratory.

Unless otherwise specified, samples will be 3 feet long by the roll or sheet width. The CQA Engineer will mark the machine direction on the samples with an arrow.

All material control tests will be performed by the Geosynthetics CQA Laboratory.

All control test results must be available at the site prior to the deployment of all geomembrane. The CQA Engineer will examine all results from laboratory conformance testing.

5.3.4.1 Material Control Test Failure

The following procedure will apply whenever a sample fails a material control test:

A. The Geomembrane Installer will replace the roll or sheet of geomembrane that is in nonconformance with the project specifications with a roll or sheet that meets project specifications.

B. The Geomembrane Installer will remove conformance samples for testing by the Geosynthetics CQA Laboratory from the closest numerical roll or sheet on both sides of the failed roll or sheet. These two samples must both conform to project specifications. If either of these samples fail, then the next numerical roll or sheet will be tested until a passing roll or sheet is found. This additional conformance testing will be at the expense of the Geomembrane Installer. If either of the two closest rolls or sheets fail, the Engineer will dictate the frequency of additional testing.

The CQA Engineer will document actions taken in conjunction with material control test failures.

5.4 GEOMEMBRANE INSTALLATION

5.4.1 Handling

The Geosynthetic Installer will handle all geomembrane in such a manner as required by the project specifications.

5.4.2 Earthwork

5.4.2.1 Surface Preparation

The Geomembrane Installer will certify in writing that the surface on which the geomembrane will be installed meets line and grade, and the surface preparation requirements of the project specifications. The certificate of acceptance will be given to the CQA Engineer prior to commencement of geomembrane installation in the area under consideration. The CQA Engineer will give a copy of this certificate

to the Engineer.

To ensure a timely covering of the subgrade (or soil liner) surface, the Engineer may allow subgrade acceptance in areas as small as one acre. After the supporting soil has been accepted by the Geomembrane Installer, it will be the Geomembrane Installer's responsibility to indicate to the Engineer and CQA Engineer any change in the supporting soil condition that may require repair work. If the CQA Engineer concurs with the Geomembrane Installer, then the Engineer will ensure that the supporting soil is repaired.

5.4.2.2 Anchorage System

The CQA Engineer will verify that anchor trenches have been constructed and backfilled according to project specifications and design drawings.

5.4.3 Geomembrane Placement

5.4.3.1 Field Panel Identification

The CQA Engineer will document that the Geomembrane Installer labels each field panel with an "identification code" (number or letter-number consistent with the layout plan) agreed upon by the Geomembrane Installer and CQA Engineer at the Geosynthetics CQA Meeting (see **Section 1.7.2**).

The Geomembrane Installer will establish a table or chart showing correspondence between roll or sheet numbers and field panel identification codes. This documentation shall be submitted to the CQA Engineer weekly for review and verification. The field panel identification code will be used for all quality control and quality assurance records.

5.4.3.2 Field Panel Placement

5.4.3.2.1 Location: The CQA Engineer will verify that field panels are installed at the location indicated in the Geomembrane Installer's layout plan, as approved or modified in **Section 5.4.3.1**.

5.4.3.2.2 Installation Schedule: The CQA Engineer will evaluate every change in the schedule proposed by the Geomembrane Installer and advise the Engineer on the acceptability of that change.

The CQA Engineer will record the identification code, location, and date of installation of each field panel.

5.4.3.2.3 Placement of Geomembrane: The CQA Engineer will verify that project specification related restrictions on placement of geomembrane are fulfilled. Additionally, the CQA Engineer will verify that the supporting soil has not been damaged by weather conditions.

5.4.3.2.4 Damage: The CQA Engineer will visually observe each panel, after placement and prior to seaming, for damage. The CQA Engineer will advise the Engineer which panels, or portion of panels, should be rejected, repaired, or accepted. Damaged panels or portions of damaged panels which have been rejected will be marked and their removal from the work area recorded by the CQA Engineer. Repairs will be made according to procedures described in this section.

As a minimum, the CQA Engineer will document that:

- the panel is placed in such a manner that it is unlikely to be damaged; and
- any tears, punctures, holes, thin spots, etc. are either marked by the Geomembrane Installer for repair or the panel is rejected.

5.4.4 Field Seaming

5.4.4.1 Seam Layout

The Geomembrane Installer will provide the CQA Engineer with a seam layout drawing, i.e., a drawing of the area to be lined showing all expected seams. The CQA Engineer and Engineer will review the seam layout drawing and verify that it is consistent with the accepted state of practice and this CQA Manual.

A seam numbering system compatible with the panel numbering system will be agreed upon at the Geosynthetics CQA Meeting (see **Section 1.7.2**). An on-going written record of the seams and repair areas shall be maintained by the Geomembrane Installer with weekly review by the CQA Engineer.

5.4.4.2 Requirements of Personnel

The Geomembrane Installer will provide the CQA Engineer with a list of proposed seaming personnel and their experience records. This document will be reviewed by the CQA Engineer for compliance with project specifications.

5.4.4.3 Seaming Equipment and Products

Field seaming processes must comply with project specifications. Proposed alternate processes will be documented and submitted to the Engineer and CQA Engineer for their approval. Only seaming apparatus which have been specifically approved by make and model will be used. The CQA Engineer will submit all documentation to the Engineer for his concurrence.

5.4.5 Field Seam Control Tests

5.4.5.1 Trial Seams

A. Prior to production seaming, after four (4) hours of continuous seaming, and/or when significant changes in geomembrane or ambient temperature occurs, the Geomembrane Installer shall perform trial seams to verify that seaming conditions and procedures are adequate. Trial seams shall be performed by each operator of extrusion welders and by the primary operator of each wedge welder using seaming equipment to be used in production seaming.

B. Trial seams shall be made on appropriate sized pieces of identical or equivalent geomembrane material.

C. Hot wedge trial seams shall be approximately 72" x 12" with the seam centered lengthwise. Extrusion fillet trial seams shall be approximately 36" x 12" with the seam centered lengthwise. A minimum of four coupons shall be tested in peel and shear (two each) (ASTM D 6392) by the Geomembrane Installer using a field tensiometer. All coupons shall meet the minimum seam strength requirements as shown in the project specifications.

D. Each trial seam shall be assigned a number and the test results recorded in the appropriate log by the Geomembrane Installer. The CQA Engineer will observe all trial seams and compile all trial seam logs.

5.4.6 Field Seam Record Tests

5.4.6.1 Nondestructive Seam Continuity Testing

The Geomembrane Installer shall test and document all seams continuously over their full length using one of the following nondestructive seam tests. This testing shall be performed simultaneously with geomembrane deployment as the work progresses and not at the completion of all field seaming.

A. Vacuum Testing shall conform to ASTM D 5641 requirements.

B. Air Pressure Testing (for double seam with an enclosed space) shall conform to ASTM D 5820 requirements and the requirements listed in **Table 5.2**.

The CQA Engineer will observe the nondestructive testing on a full time basis to ensure conformance with this CQA Manual and the project specifications.

5.4.6.2 Field Destructive Seam Testing

A. The Geomembrane Installer shall obtain 12" x 30" (or longer as needed) samples of field seams with the seam centered lengthwise, suitable for testing, at an average frequency of one sample per 500 linear feet of seam. The sample shall be cut into two equal-length pieces, one for field destructive seam testing by the Geosynthetics Installer and one given to the CQA Engineer as an archive sample. The date, time, equipment, seam number, and seaming parameters will be marked on each sample and recorded by the CQA Engineer.

B. The Geomembrane Installer shall perform and document field destructive seam testing using a field tensiometer. A minimum of five coupons each will be tested in peel and shear (ASTM D 6392). Coupons shall meet the minimum seam strength requirements as shown in the project specifications.

C. The CQA Engineer or the Owner may require additional random samples to be taken for testing in areas which visually appear defective and not in accordance with the project requirements.

D. All holes in the geomembrane resulting from destructive seam sampling shall be immediately repaired in accordance with repair procedures described in this manual.

5.4.6.3 Geosynthetics CQA Laboratory Destructive Testing

A. The Geomembrane Installer shall obtain 12" x 30" (or longer as needed) samples of field seams with the seam centered lengthwise, suitable for testing, at an average frequency of one sample per day to confirm field destructive seam tests. The sample shall be cut into two equal-length pieces, both to be given to the CQA Engineer for laboratory destructive seam testing and as an archive sample. The date, time, equipment, seam number, and seaming parameters will be marked on each sample and recorded by the CQA Engineer.

B. Laboratory destructive test samples will be packaged and shipped to the Geosynthetics CQA Laboratory by the CQA Engineer in a manner that

will not damage the test sample.

C. A minimum of five coupons each will be tested in peel and shear (ASTM D 6392) by the Geosynthetics CQA Laboratory. Coupons shall meet the minimum seam strength requirements as shown in the project specifications.

D. All geomembrane destructive test samples that fail to meet project specifications will be saved and sent to the CQA Engineer for observation.

E. The CQA Engineer will review laboratory test results as soon as they become available.

5.4.6.4 Field Seam Record Test Failure

For noncomplying tests, the CQA Engineer will:

- observe continuity testing of the repaired areas performed by the Geomembrane Installer;
- confirm the record location, date, test unit number, name of tester, and compile the record of testing provided by the Geomembrane Installer;
- provide a walk-through inspection of all impacted seam areas and verify that the areas have been tested in accordance with the CQA Manual and project specifications; and
- verify that the Geomembrane Installer has marked repair areas with the appropriate color-coded marking pencil.

5.4.6.5 Defining Extent of Field Seam Record Test Failure

All defective seam test failures must be bounded by acceptable destructive tests. The CQA Engineer will document repair actions taken in conjunction with all seam test failures.

5.4.7 Repairs & Verification

5.4.7.1 Repair Procedures

A. All repair procedures shall be in accordance with the project specifications. The CQA Engineer will observe all repair procedures.

B. All surfaces shall be clean and dry at the time of the repair.

C. After an extrusion seam is made, no more than ¼ inch of abrasion shall be visible beyond the weld.

5.4.7.2 Repair Verification

A. Each repair shall be numbered and logged by the Geomembrane Installer.

B. Each repair shall be non-destructively tested by the Geomembrane Installer using the methods described above. Repairs which pass non-destructive testing shall be taken as an indication of an adequate repair.

C. Repairs more than 150 feet long may be of sufficient length to require destructive test sampling, at the discretion of the CQA Engineer. A failed test indicates that the repair shall be redone and retested until passing test results are achieved.

5.5 LINER SYSTEM ACCEPTANCE

The geomembrane component of the liner system will be accepted by the Owner when:

- the installation is finished;
- verification of the adequacy of all seams and repairs, including associated testing, is complete;
- CQA Engineer provides the Engineer with a final copy of the nondestructive test documentation, repair information, and as-built drawings, as submitted by the Geomembrane Installer;
- CQA Engineer provides the Engineer with a certification, submitted by the Geomembrane Installer that the geomembrane was installed in accordance with the Geomembrane Manufacturer's recommendations as well as the project drawings and project specifications; and
- all documentation of the installation is completed including the CQA Engineer's final report.

5.6 MATERIALS IN CONTACT WITH GEOMEMBRANES

The quality assurance procedures indicated in this subsection are only intended to assure that the installation of these materials does not damage the geomembrane. All reasonable measures to protect the geomembrane and provide additional quality assurance procedures are necessary to assure that systems built with these materials will be constructed to ensure proper performance.

5.6.1 Soils

Prior to placement, the CQA Engineer will visually confirm that all soil materials to be placed against the geomembrane comply with project specifications. The Geomembrane Installer will provide the CQA Engineer a written surface acceptance certificate in accordance with **Section 5.4.2**. All soil materials shall be placed and compacted in accordance with project specifications.

5.6.2 Sumps and Appurtenances

The CQA Engineer will verify that:

- installation of the geomembrane in appurtenance areas, and connection of the geomembrane to appurtenances have been made according to the project specifications;
- extreme care is taken while seaming around appurtenances since neither nondestructive nor destructive testing may be feasible in these areas; and
- the geomembrane or appurtenances have not been visibly damaged while making connections to appurtenances.

5.7 DEFICIENCIES

The CQA Engineer will immediately determine the extent and nature of all defects and deficiencies and report them to the Owner and Engineer. All defects and deficiencies will be documented by the CQA Engineer. The Contractor shall correct defects and deficiencies to the satisfaction of the CQA Engineer. The CQA Engineer will observe all retests on repaired defects.

TABLE 5.1: CQA TESTING PROGRAM FOR GEOMEMBRANE MATERIAL APPROVAL

PROPERTY	TEST METHOD	TEST FREQUENCY
Thickness	ASTM D 5199/D 5994	100,000 ft^2 or 1 per Lot[1]
Density	ASTM D 1505/D 792	100,000 ft^2 or 1 per Lot[1]
Carbon Black Content	ASTM D 1603	100,000 ft^2 or 1 per Lot[1]
Carbon Black Dispersion	ASTM D 5596	100,000 ft^2 or 1 per Lot[1]
Tensile Properties:	ASTM D 6693 (Type IV)	
Tensile Strength at Yield		100,000 ft^2 or 1 per Lot[1]
Tensile Strength at Break		100,000 ft^2 or 1 per Lot[1]
Elongation at Yield		100,000 ft^2 or 1 per Lot[1]
Elongation at Break		100,000 ft^2 or 1 per Lot[1]
Tear Resistance	ASTM D 1004	100,000 ft^2 or 1 per Lot[1]

Notes:

1. Whichever provides the larger number of tests.

TABLE 5.2 AIR PRESSURE TEST REQUIREMENTS

MATERIAL	MIN. PRESSURE (PSI)	MAX. PRESSURE DROP (PSI) AFTER 5 MINUTES
30 Mil LLDPE	15	3
≥ 60 Mil HDPE	25	3

SECTION 6.0
LEACHATE MANAGEMENT SYSTEM CQA

6.1 INTRODUCTION

This section of the CQA Manual addresses the components of the leachate management system including components of the leachate collection system (LCS) (drainage aggregate, collection pipe, protective cover, and geosynthetic rain cover), leak detection system (LDS) (Phase 4A only), and the leachate transmission and storage system (sumps, transmission piping, manholes, valves, etc.). By reference to **Sections 7.0 and 8.0** of this CQA Manual, this section also addresses the geotextiles and drainage geocomposite that are components of the LCS. This section outlines the CQA program to be implemented with regard to material approval, construction monitoring, and resolution of problems.

6.2 LEACHATE MANAGEMENT SYSTEM MATERIAL APPROVAL

The CQA Engineer will verify that the following are provided and installed in accordance with the project drawings, specifications, and this CQA Manual.

6.2.1 Coarse Aggregate (Drainage Aggregate)

A. Receipt of Contractor's submittals on coarse aggregate.

B. Review of submittals for coarse aggregate for conformity to the project specifications.

C. Verify that coarse aggregate in stockpiles or at borrow sources conforms to the project specifications.

D. Conduct material control tests in accordance with **Table 6.1**.

6.2.2 Leachate Collection Media (Drainage Aggregate)

A. Receipt of Contractor's submittals on leachate collection media.

B. Review of submittals for leachate collection media for conformity to the project specifications.

C. Verify that collection media in stockpiles or at borrow sources conforms to the project specifications.

D. Conduct material control tests in accordance with **Table 6.1**.

6.2.3 High Density Polyethylene (HDPE) Pipe

A. Receipt of Contractor's submittals on HDPE pipe.

B. Review of submittals for HDPE pipe for conformity to the project specifications.

6.2.4 Geotextiles (Verify for each type of Geotextile)

The CQA program for geotextiles is presented in **Section 7.0** of this CQA Manual.

6.2.5 Drainage Geocomposite

The CQA program for drainage geocomposite is presented in **Section 8.0** of this CQA Manual.

6.2.6 Protective Cover

A. Review the proposed source of protective cover for conformance with the project specifications.

B. Conduct material control tests in accordance with **Table 6.1**.

6.2.7 Geosynthetic Rain Cover

A. Receipt of Contractor's submittals on Geosynthetic Rain Cover.

B. Review of submittals for Geosynthetic Rain Cover for conformity to the project specifications.

6.2.8 Sumps/Manholes/Leachate Storage

A. Receipt of Contractor's submittals on sumps/manholes/leachate storage.

B. Review of submittals for sumps/manholes/leachate storage for conformity to the project specifications.

6.2.9 Valves

A. Receipt of Contractor's submittals on valves.

B. Review of submittals for valves for conformity to the project specifications.

6.3 LEACHATE MANAGEMENT SYSTEM INSTALLATION

6.3.1 Leachate Collection System (LCS)

The CQA Engineer will allow installation of the LCS to proceed only after he has been provided certification of the installed HDPE geomembrane.

The CQA Engineer will monitor and document the construction of all LCS components for compliance with the project specifications. Monitoring the construction work includes the following:

- monitoring the minimum vertical buffer maintained between field equipment and the geomembrane;
- monitoring that the placement of the LCS components does not fold or damage the geomembrane or other underlying layers; and
- witness and verify the installation of collection piping and gravel columns.

6.3.2 Leachate Transmission and Storage System

The CQA Engineer will monitor and document the construction of all leachate transmission and storage system components for compliance with the project specifications. Monitoring the construction work includes the following:

- witness and verify the installation of transmission piping;
- witness and verify the leak testing of transmission piping; and
- witness and verify the leak testing of manholes, etc. (where applicable).

6.4 DEFICIENCIES

The CQA Engineer will immediately determine the extent and nature of all defects and deficiencies and report them to the Owner and Engineer. All defects and deficiencies will be documented by the CQA Engineer. The Contractor shall correct defects and deficiencies to the satisfaction of the CQA Engineer. The CQA Engineer will observe all retests on repaired defects.

TABLE 6.1: CQA TESTING PROGRAM FOR LEACHATE MANAGEMENT SYSTEM

COMPONENT	PROPERTY	TEST METHOD	MINIMUM TEST FREQUENCY
CONTROL TESTS:			
Coarse Aggregate:	Gradation	ASTM C 136	5,000 CY
	Carbonate Content	ASTM D 3042	1 per source
Leachate Collection Media:	Gradation	ASTM C 136	5,000 CY
	Permeability[1]	ASTM D 2434	10,000 CY
	Carbonate Content	ASTM D 3042	1 per source
Protective Cover: (Soil Only - See Note 2)	Visual Classification	ASTM D 2488	Each Load
	Grain Size Analysis	ASTM D 422	5,000 CY per Each Soil

Notes:

1. Option for Failed Permeability Test:
   In the case of a failed permeability test value within 20% of the specified value, an additional three tests may be run on the proposed material. If all three tests pass, then the results from the first test can be discounted. Otherwise a different material or material from a different source shall be submitted. The cost for additional testing shall be borne solely by the Contractor.
2. If protective cover consists of additional leachate collection media, perform control tests in accordance with the requirements for leachate collection media.

SECTION 7.0
GEOTEXTILE CQA

7.1 INTRODUCTION

This section of the CQA Manual addresses geotextiles and outlines the CQA program to be implemented with regard to material approval, material control tests, repairs, and resolution of problems.

7.2 GEOTEXTILE MATERIAL APPROVAL

7.2.1 Geotextile Product Data

For each type of geotextile to be used, the CQA Engineer will review the Contractor's submittals for conformance with the project specifications.

7.2.2 Shipment And Storage

During shipment and storage, all geotextiles will be protected as required by the project specifications. The CQA Engineer will observe rolls upon delivery at the site.

7.2.3 Quality Control Certificates

Upon delivery, the CQA Engineer will:

- verify that the Manufacturer's quality control certificates have been provided at the specified frequency and that each certificate identified the rolls related to it; and

- review the Manufacturer's quality control certificates and verify that the certified properties meet the project technical specifications.

7.2.4 Geotextile Material Control Tests

Samples for material control tests, as shown on **Table 7.1**, will be obtained by the CQA Engineer at the indicated frequencies upon delivery of the geotextiles. Alternatively, samples may be randomly obtained at the manufacturing site by the CQA Engineer or representatives of the Geosynthetics CQA Laboratory.

Unless otherwise specified, samples will be 3 feet long by the roll width. The CQA Engineer will mark the machine direction on the samples with an arrow.

All material control tests will be performed by the Geosynthetics CQA Laboratory.

All test results must be available at the site prior to the deployment of all geotextiles. The

CQA Engineer will examine all results from laboratory testing.

7.2.4.1 Material Control Test Failure

The following procedure will apply whenever a sample fails a material control test:

A. The Geosynthetic Installer will replace the roll of geotextile that is in nonconformance with the project specifications with a roll that meets project specifications.

B. The Geosynthetic Installer will remove samples for testing by the Geosynthetics CQA Laboratory from the closest numerical roll on both sides of the failed roll. These two samples must both conform to project specifications. If either of these samples fail, then the next numerical roll will be tested until a passing roll is found. This additional testing will be at the expense of the Geosynthetic Installer. If either of the two closest rolls fail, the Engineer will dictate the frequency of additional testing.

The CQA Engineer will document actions taken in conjunction with material control test failures.

7.3 GEOTEXTILE INSTALLATION

7.3.1 Handling And Placement

The Geosynthetic Installer will handle and place all geotextiles in such a manner as required by the project specifications.

7.3.2 Seams And Overlaps

All geotextiles will be seamed or overlapped in accordance with project specifications or as approved by the CQA Engineer and Engineer.

7.3.3 Repairs

Any holes or tears in the geotextile will be repaired in accordance with the project specifications. The CQA Engineer will observe any repair.

7.3.4 Placement Of Overlying Materials

All soil materials located on top of a geotextile shall be placed in accordance with the project specifications.

7.4 DEFICIENCIES

The CQA Engineer will immediately determine the extent and nature of all defects and deficiencies and report them to the Owner and Engineer. All defects and deficiencies will be documented by the CQA Engineer. The Contractor shall correct defects and deficiencies to the satisfaction of the CQA Engineer. The CQA Engineer will observe all retests on repaired defects.

TABLE 7.1: CQA TESTING PROGRAM FOR GEOTEXTILE MATERIAL APPROVAL

PROPERTY	TEST METHOD	TEST FREQUENCY
CONTROL TESTS:		
Tensile Properties	ASTM D 4632	100,000 ft^2 or 1 per Lot[1]
Puncture Resistance	ASTM D 4833	100,000 ft^2 or 1 per Lot[1]
Trapezoidal Tear Strength	ASTM D 4533	100,000 ft^2 or 1 per Lot[1]
Apparent Opening Size (AOS) (Type GT-S Geotextile Only)	ASTM D 4751	100,000 ft^2 or 1 per Lot[1]

Notes:

1. Whichever provides the larger number of tests.
2. CQA testing is not required for geotextiles placed outside of the containment area.

SECTION 8.0
DRAINAGE GEOCOMPOSITE CQA

8.1 INTRODUCTION

This section of the CQA Manual addresses drainage geocomposite (DGC) and outlines the CQA program to be implemented with regard to material approval, material control tests, repairs, and resolution of problems.

8.2 DGC MATERIAL APPROVAL

8.2.1 DGC Product Data

The CQA Engineer will review the Contractor's submittals for conformance with the project specifications.

8.2.2 Shipment And Storage

During shipment and storage, all DGC will be protected as required by the project specifications. The CQA Engineer will observe rolls upon delivery at the site.

8.2.3 Quality Control Certificates

Upon delivery, the CQA Engineer will:

- verify that the Manufacturer's quality control certificates have been provided at the specified frequency and that each certificate identified the rolls related to it; and
- review the Manufacturer's quality control certificates and verify that the certified properties meet the project technical specifications.

8.2.4 DGC Material Control Tests

Samples for material control tests, as shown on **Table 8.1**, will be obtained by the CQA Engineer at the indicated frequencies upon delivery of the DGC. Alternatively, samples may be randomly obtained at the manufacturing site by the CQA Engineer or representatives of the Geosynthetics CQA Laboratory.

Unless otherwise specified, samples will be 3 feet long by the roll width. The CQA Engineer will mark the machine direction on the samples with an arrow.

All material control tests will be performed by the Geosynthetics CQA Laboratory.

All test results must be available at the site prior to the deployment of all DGC. The CQA

Engineer will examine all results from laboratory testing.

8.2.4.1 Material Control Test Failure

The following procedure will apply whenever a sample fails a material control test:

A. The Geosynthetic Installer will replace the roll of DGC that is in nonconformance with the project specifications with a roll that meets project specifications.

B. The Geosynthetic Installer will remove samples for testing by the Geosynthetics CQA Laboratory from the closest numerical roll on both sides of the failed roll. These two samples must both conform to project specifications. If either of these samples fail, then the next numerical roll will be tested until a passing roll is found. This additional testing will be at the expense of the Geosynthetic Installer. If either of the two closest rolls fail, the Engineer will dictate the frequency of additional testing.

The CQA Engineer will document actions taken in conjunction with material control test failures.

8.3 DGC INSTALLATION

8.3.1 Handling And Placement

The Geosynthetic Installer will handle and place all DGC in such a manner as required by the project specifications.

8.3.2 Stacking And Joining

When several layers of DGC are stacked, care should be taken to ensure that stacked DGC are placed in the same direction. Stacked DGC will never be laid in perpendicular directions to the underlying DGC (unless otherwise specified by the Engineer). The CQA Engineer will observe the stacking of DGC.

Adjacent rolls of DGC will be joined according to construction drawings and project specifications.

8.3.3 Repairs

Any holes or tears in the DGC will be repaired in accordance with the project specifications. The CQA Engineer will observe any repair.

8.3.4 Placement Of Overlying Materials

All soil materials located on top of DGC shall be placed in accordance with the project specifications.

8.4 DEFICIENCIES

The CQA Engineer will immediately determine the extent and nature of all defects and deficiencies and report them to the Owner and Engineer. All defects and deficiencies will be documented by the CQA Engineer. The Contractor shall correct defects and deficiencies to the satisfaction of the CQA Engineer. The CQA Engineer will observe all retests on repaired defects.

TABLE 8.1: CQA TESTING PROGRAM FOR DGC MATERIAL APPROVAL

PROPERTY	TEST METHOD	TEST FREQUENCY
CONTROL TESTS:		
Thickness (geonet only)	ASTM D 5199	100,000 ft^2 or 1 per Lot[1]
Density (geonet only)	ASTM D 1505	100,000 ft^2 or 1 per Lot[1]
Ply Adhesion	ASTM D 413/ GRI GC7	100,000 ft^2 or 1 per Lot[1]
Transmissivity	ASTM D 4716[2]	1 per Resin Lot

Notes:

1. Whichever provides the larger number of tests.
2. Conduct tests for transmissivity in accordance with the conditions given in the project specifications.

SECTION 9.0
GEOSYNTHETIC CLAY LINER (GCL) CQA

9.1 INTRODUCTION

This section of the CQA Manual addresses geosynthetic clay liner (GCL) and outlines the CQA program to be implemented with regard to material approval, material control tests, repairs, and resolution of problems.

9.2 GCL MANUFACTURER AND INSTALLER APPROVAL

The Contractor shall submit the qualifications of the GCL Manufacturer and the GCL Installer, as described in the specifications, to the CQA Engineer for approval.

9.3 GCL MATERIAL APPROVAL

9.3.1 GCL Product Data

The CQA Engineer will review the Contractor's submittals for conformance with the project specifications.

9.3.2 Shipment And Storage

During shipment and storage, GCL will be protected as required by the project specifications. The CQA Engineer will observe rolls upon delivery at the site.

9.3.3 Quality Control Certificates

Upon delivery, the CQA Engineer will:

- verify that the Manufacturer's quality control certificates have been provided at the specified frequency and that each certificate identified the rolls related to it; and
- review the Manufacturer's quality control certificates and verify that the certified properties meet the project technical specifications.

9.3.4 GCL Material Control Tests

Samples for material control tests, as shown on **Table 9.1**, will be obtained by the CQA Engineer at the indicated frequencies upon delivery of the GCL. Alternatively, samples may be randomly obtained at the manufacturing site by the CQA Engineer or representatives of the Geosynthetics CQA Laboratory.

Unless otherwise specified, samples will be 3 feet long by the roll width. The CQA

Engineer will mark the machine direction on the samples with an arrow.

All material control tests will be performed by the Geosynthetics CQA Laboratory.

All test results must be available at the site prior to the deployment of all GCL. The CQA Engineer will examine all results from laboratory testing.

9.3.4.1 Material Control Test Failure

The following procedure will apply whenever a sample fails a material control test:

A. The Geosynthetic Installer will replace the roll of GCL that is in nonconformance with the project specifications with a roll that meets project specifications.

B. The Geosynthetic Installer will remove samples for testing by the Geosynthetics CQA Laboratory from the closest numerical roll on both sides of the failed roll. These two samples must both conform to project specifications. If either of these samples fail, then the next numerical roll will be tested until a passing roll is found. This additional testing will be at the expense of the Geosynthetic Installer. If either of the two closest rolls fail, the Engineer will dictate the frequency of additional testing.

The CQA Engineer will document actions taken in conjunction with material control test failures.

9.4 GCL INSTALLATION

9.4.1 Handling And Placement

The Geosynthetic Installer will handle and place all GCL in such a manner as required by the project specifications.

9.4.2 Seams And Overlaps

All GCL will be seamed or overlapped in accordance with project specifications or as approved by the CQA Engineer and Engineer.

9.4.3 Repairs

Any holes or tears in the GCL will be repaired in accordance with the project specifications. The CQA Engineer will observe any repair.

9.4.4 Placement Of Overlying Materials

All soil materials located on top of the GCL shall be placed in accordance with the project specifications.

9.5 DEFICIENCIES

The CQA Engineer will immediately determine the extent and nature of all defects and deficiencies and report them to the Owner and Engineer. All defects and deficiencies will be documented by the CQA Engineer. The Contractor shall correct defects and deficiencies to the satisfaction of the CQA Engineer. The CQA Engineer will observe all retests on repaired defects.

TABLE 9.1: CQA TESTING PROGRAM FOR GCL MATERIAL APPROVAL

PROPERTY	TEST METHOD	TEST FREQUENCY
CONTROL TESTS:		
Hydraulic Conductivity	ASTM D 5084/D 5887	100,000 ft^2 or 1 per Lot[1]
Bentonite Content	ASTM D 5993 (@ 0% moisture)	100,000 ft^2 or 1 per Lot[1]
Peel Strength	ASTM D 6496	100,000 ft^2 or 1 per Lot[1]

Notes:

1. Whichever provides the larger number of tests.

SECTION 10.0
FINAL COVER SYSTEM CQA

10.1 INTRODUCTION

This section of the CQA Manual addresses the landfill gas (LFG) system, drainage aggregate and piping, and the vegetative soil layer of the final cover system. By reference to **Sections 5.0, 7.0, and 8.0** of this CQA Manual, this section also addresses the geomembrane, geotextiles, and drainage geocomposite that are included in the final cover system. This section outlines the CQA program to be implemented with regard to material approval, construction monitoring, and resolution of problems.

10.2 FINAL COVER SYSTEM MATERIAL APPROVAL

The CQA Engineer shall verify that the following are provided and installed in accordance with the project drawings, specifications, and this CQA Manual.

10.2.1 High Density Polyethylene (HDPE) Pipe

A. Receipt of Contractor's submittals on HDPE pipe.

B. Review of submittals for HDPE pipe for conformity to the project specifications.

10.2.2 Polyvinyl Chloride (PVC) Pipe

A. Receipt of Contractor's submittals on PVC pipe.

B. Review of submittals for PVC pipe for conformity to the project specifications.

10.2.3 Corrugated Polyethylene (CPE) Pipe

A. Receipt of Contractor's submittals on CPE pipe.

B. Review of submittals for CPE pipe for conformity to the project specifications.

10.2.4 LFG System Components

A. Receipt of Contractor's submittals on LFG system components.

B. Review of submittals for LFG system components for conformity to the project specifications.

10.2.5 Aggregates (Verify for each type of aggregate)

A. Receipt of Contractor's submittals on aggregates.

B. Review of submittals for aggregates for conformity to the project specifications.

C. Verify that aggregates in stockpiles or at borrow sources conform to the project specifications.

D. Conduct material control tests in accordance with **Table 10.1**.

10.2.6 Geomembrane

The CQA program for geomembranes is presented in **Section 5.0** of this CQA Manual.

10.2.7 Geotextiles

The CQA program for geotextiles is presented in **Section 7.0** of this CQA Manual.

10.2.8 Drainage Geocomposite

The CQA program for drainage geocomposite is presented in **Section 8.0** of this CQA Manual.

10.2.9 Vegetative Soil Layer

A. Review the proposed source of vegetative soil layer for conformance with the project specifications.

B. Conduct material control tests in accordance with **Table 10.1**.

10.3 FINAL COVER SYSTEM INSTALLATION

The CQA Engineer will monitor and document the construction of all final cover system components for compliance with the project specifications. Monitoring the construction work for the components of the final cover system includes the following:

- verify location and depth of LFG wells;
- verify location of all piping;
- monitoring the minimum vertical buffer maintained between field equipment and geosynthetics/piping; and
- monitoring that the placement of the final cover system components does not fold or damage the geosynthetics or other underlying layers.

10.4 DEFICIENCIES

The CQA Engineer will immediately determine the extent and nature of all defects and deficiencies and report them to the Owner and Engineer. All defects and deficiencies will be documented by the CQA Engineer. The Contractor shall correct defects and deficiencies to the satisfaction of the CQA Engineer. The CQA Engineer will observe all retests on repaired defects.

TABLE 10.1: CQA TESTING PROGRAM FOR FINAL COVER SYSTEM

COMPONENT	PROPERTY	TEST METHOD	MINIMUM TEST FREQUENCY
CONTROL TESTS:			
Coarse Aggregate:	Gradation	ASTM C 136	5,000 CY
Vegetative Soil Layer:	Visual Classification	ASTM D 2488	Each Load
	Grain Size Analysis	ASTM D 422	5,000 CY
	Atterberg Limits	ASTM D 4318	5,000 CY

Appendix A

Reference List of Test Methods

JOHNSTON COUNTY LANDFILL

CQA MANUAL
APPENDIX A: REFERENCE LIST OF TEST METHODS

American Society American Society of Testing and Materials (ASTM):

ASTM C 136	Standard Test Method for Sieve Analysis of Fine and Coarse Aggregates.
ASTM D 413	Standard Test Methods for Rubber Property - Adhesion to Flexible Substrate.
ASTM D 422	Standard Test Method for Particle Size Analysis of Soils.
ASTM D 698	Test Method for Laboratory Compaction Characteristics of Soil Using Standard Effort (12,400 ft-lbf/ft^3).
ASTM D 792	Standard Test Method for Density and Specific Gravity (Relative Density) of Plastics by Displacement.
ASTM D 1004	Standard Test Method for Initial Tear Resistance of Plastic Film and Sheeting.
ASTM D 1505	Standard Test Method for Density of Plastics by the Density-Gradient Technique.
ASTM D 1556	Standard Test Method for Density and Unit Weight of Soil in Place by the Sand-Cone Method.
ASTM D 1603	Standard Test Method for Carbon Black in Olefin Plastics.
ASTM D 2167	Standard Test Method for Density and Unit Weight of Soil in Place by the Rubber Balloon Method.
ASTM D 2216	Standard Test Method for Laboratory Determination of Water (Moisture) Content of Soil and Rock by Mass.
ASTM D 2434	Standard Test Method for Permeability of Granular Soils (Constant Head).
ASTM D 2488	Standard Practice for Description and Identification of Soils (Visual-Manual Procedure).

ASTM D 2937	Standard Test Method for Density of Soil in Place by the Drive Cylinder Method.
ASTM D 3042	Standard Test Method for Insoluble Residue in Carbonate Aggregates.
ASTM D 4318	Standard Test Method for Liquid Limit, Plastic Limit, and Plasticity Index of Soils.
ASTM D 4533	Standard Test Method for Trapezoid Tearing Strength of Geotextiles.
ASTM D 4632	Standard Test Method for Grab Breaking Load and Elongation of Geotextiles.
ASTM D 4643	Standard Test Method for Determination of Water (Moisture) Content of Soil by the Microwave Oven Method.
ASTM D 4716	Standard Test Method for Constant Head Hydraulic Transmissivity (In-Plane Flow) of Geotextiles and Geotextile Related Products.
ASTM D 4751	Standard Test Method for Determining Apparent Opening Size of a Geotextile.
ASTM D 4833	Standard Test Method for Index Puncture Resistance of Geotextiles, Geomembranes, and Related Products.
ASTM D 4959	Standard Test Method for Determination of Water (Moisture) Content of Soil by Direct Heating Method.
ASTM D 5084	Standard Test Method for Measurement of Hydraulic Conductivity of Saturated Porous Materials Using a Flexible Wall Permeameter.
ASTM D 5199	Standard Test Method for Measuring Nominal Thickness of Geotextiles and Geomembranes.
ASTM D 5596	Standard Test Method for Microscopic Evaluation of the Dispersion of Carbon Black in Polyolefin Geosynthetics.
ASTM D 5641	Standard Practice for Geomembrane Seam Evaluation by Vacuum Chamber.
ASTM D 5820	Standard Practice for Pressurized Air Channel Evaluation of Dual Seamed Geomembranes.

ASTM D 5887	Standard Test Method for Measurement of Index Flux Through Saturated Geosynthetic Clay Liner Specimens Using a Flexible Wall Permeameter.
ASTM D 5993	Standard Test Method for Measuring Mass per Unit of Geosynthetic Clay Liners.
ASTM D 5994	Standard Test Method for Measuring Core Thickness of Textured Geomembrane.
ASTM D 6392	Standard Test Method for Determining the Integrity of Nonreinforced Geomembrane Seams Produced Using Thermo-Fusion Methods.
ASTM D 6496	Standard Test Method for Determining Average Bonding Peel Strength Between the Top and Bottom Layers of Needle-Punched Geosynthetic Clay Liners.
ASTM D 6693	Standard Test Method for Determining Tensile Properties of Nonreinforced Flexible Polyethylene and Nonreinforced Polypropylene Geomembranes.
ASTM D 6938	Standard Test Methods for In-Place Density and Water Content of Soil and Soil-Aggregate in Place by Nuclear Methods (Shallow Depth).

Geosynthetic Research Institute (GRI):

GRI GC7	Determination of Adhesion and Bond Strength of Geocomposites.

Attachment C

Operations Manual

Permit Amendment Application
Johnston County C&D Landfill – Area 2 (Permit No. 51-03)

Operations Manual

Johnston County Landfill Facility
Smithfield, North Carolina

Prepared for:
Johnston County Department of Public Utilities
Smithfield, North Carolina

December 2011
Revised: August 2012

NC LIC. NO. C-0828 (ENGINEERING)

SMITH+GARDNER

14 N. Boylan Avenue, Raleigh NC 27603 | 919.828.0577

JOHNSTON COUNTY
JOHNSTON COUNTY LANDFILL FACILITY

OPERATIONS MANUAL

TABLE OF CONTENTS

Page

1.0 GENERAL FACILITY OPERATIONS
1.1 Overview 1.0-1
1.2 Contact Information 1.0-1
1.2.1 Johnston County 1.0-1
1.2.2 North Carolina Department of Environment and Natural Resources 1.0-2
1.3 Access Control 1.0-2
1.3.1 Physical Restraints 1.0-3
1.3.2 Security 1.0-3
1.4 Signage 1.0-3
1.5 Communications 1.0-3
1.6 Fire and Safety 1.0-3
1.6.1 Fire Control 1.0-3
1.6.2 Safety 1.0-4
1.7 Severe Weather Conditions 1.0-5
1.7.1 Ice Storms 1.0-5
1.7.2 Heavy Rains 1.0-5
1.7.3 Electrical Storms 1.0-5
1.7.4 Windy Conditions 1.0-5
1.7.5 Violent Storms 1.0-5
1.8 Equipment Requirements 1.0-6
1.9 Personnel Requirements 1.0-6
1.10 Utilities 1.0-6
1.11 Record Keeping Program 1.0-6

2.0 WASTE HANDLING OPERATIONS
2.1 Overview 2.0-1
2.2 Acceptable Wastes 2.0-1
2.2.1 MSW Landfill Units 2.0-1
2.2.2 C&D Landfill Units 2.0-1
2.3 Prohibited Wastes 2.0-2
2.3.1 MSW Landfill Units 2.0-2
2.3.2 C&D Landfill Units 2.0-2
2.4 Waste Screening Programs 2.0-2
2.4.1 Waste Receiving and Inspection 2.0-3
2.4.2 Hazardous Waste Contingency Plan 2.0-3

Table of Contents (Continued)

Page

2.5 Waste Disposal 2.0-4
2.5.1 Access 2.0-4
2.5.2 General Procedures 2.0-4
2.5.3 Waste Disposal - Lined (MSW or C&D) Landfill Units 2.0-5
2.5.3.1 Cell Operations and Phasing 2.0-5
2.5.3.2 Cell Activation 2.0-6
2.5.3.3 Placement of Initial Lift 2.0-6
2.5.3.4 Equipment Operations Within the Landfill 2.0-6
2.5.4 Special Waste Management 2.0-7
2.5.4.1 Asbestos Management (MSW or C&D Landfill Units) 2.0-7
2.5.4.2 Sewage Sludge Management (MSW Landfill Units) 2.0-8
2.5.4.3 Spoiled Food and Animal Waste (MSW Landfill Units) . . . 2.0-8
2.5.5 Daily or Periodic Cover 2.0-8
2.5.5.1 MSW Landfill Units 2.0-8
2.5.5.2 C&D Landfill Units 2.0-8
2.5.5.3 Tarpomatic Alternative Daily Cover 2.0-8
2.5.6 Intermediate Cover 2.0-9
2.5.7 Height Monitoring 2.0-9
2.6 Yard Waste Processing Area Operations 2.0-10
2.7 Convenience Center Operations 2.0-10

3.0 ENVIRONMENTAL MANAGEMENT
3.1 Overview 3.0-1
3.2 Surface Water Control 3.0-1
3.2.1 Surface Water Run-On Control 3.0-1
3.2.2 Active Face Run-Off Control - MSW Landfill Units 3.0-1
3.2.3 Erosion Control 3.0-2
3.2.4 Sedimentation Control 3.0-2
3.2.5 Separation of Stormwater/Leachate - Lined (MSW or C&D) Landfill Units 3.0-2
3.3 Leachate Management - Lined (MSW or C&D) Landfill Units 3.0-3
3.3.1 Leachate Collection System (LCS) 3.0-3
3.3.1.1 Gravel Column Maintenance 3.0-3
3.3.1.2 Collection Pipe Cleanout 3.0-4
3.3.1.3 Leachate Removal 3.0-4
3.3.1.4 Operation & Maintenance of Leachate Pumps & Storage Lagoon 3.0-4
3.3.2 Leak Detection System - Phase 4A MSW Landfill Unit 3.0-4
3.3.3 Leachate Quality Sampling 3.0-5
3.3.4 Record Keeping 3.0-5
3.3.5 Leachate Contingency Plan 3.0-6
3.4 Water Quality Monitoring 3.0-6

Table of Contents (Continued)

Page

3.5 Landfill Gas (LFG) Management 3.0-7
3.5.1 MSW Landfill Units 3.0-7
3.5.2 C&D Landfill Units 3.0-7
3.6 Landfill Gas (LFG) Monitoring Plan 3.0-7
3.6.1 Record Keeping 3.0-7
3.7 Vector Control 3.0-8
3.7.1 MSW Landfill Units 3.0-8
3.7.2 C&D Landfill Units 3.0-8
3.8 Odor Control 3.0-8
3.8.1 MSW Landfill Units 3.0-8
3.8.2 C&D Landfill Units 3.0-8
3.9 Dust Control 3.0-8
3.10 Irrigation of Reclaimed Wastewater 3.0-8

FIGURES

Figure 1 Existing and Proposed Landfill Units and Solid Waste Management Activities

APPENDICES

Appendix A EPA Method 9095 - Paint Filter Liquids Test
Appendix B Waste Screening Form
Appendix C Cell Activation Forms
Appendix D Leachate Recirculation Plan
Appendix E Irrigation of Reclaimed Wastewater

SECTION 1.0
GENERAL FACILITY OPERATIONS

1.1 OVERVIEW

This Operations Manual was prepared for operations of the Johnston County Landfill facility (Permit No. 51-03) located off of Highway 210 on County Home Road near Smithfield. This document discusses the operation of the following landfill units and other solid waste management activities:

- Phase 4A Lined Subtitle D MSW Landfill Unit (Cell 3 - Proposed);
- Area 1 C&D Vertical Expansion;
- Area 2 Lined C&D Landfill Unit;
- Yard Waste Processing Area; and
- Convenience Center.

Refer to **Figure 1** for the location of existing and proposed landfill units and other solid waste management activities.

The information contained herein was prepared to provide landfill personnel with a clear understanding of how the Design Engineer assumed that the completed facility would be operated. While deviations from the operations outlined here may be acceptable, they should be reviewed and approved by the Design Engineer. Please refer to the appropriate permit application for a detailed discussion and calculations for the individual components of each landfill unit, including phasing plans.

1.2 CONTACT INFORMATION

All correspondence and questions concerning the operation of the Johnston County Landfill should be directed to the appropriate County and State personnel listed below. For fire or police emergencies dial 911.

1.2.1 <u>Johnston County</u>

Johnston County Department of Public Utilities
309 E. Market Street
P.O. Box 2263
Smithfield, NC 27577
Phone: (919) 209-8333
Fax: (919) 934-7174

Contacts: Tim Broome, P.E., Director

Johnston County Solid Waste Management Department
680 County Home Road
P.O. Box 2263
Smithfield, NC 27577
Phone: (919) 938-4750
Fax: (919) 989-7152

Contact: Rick Proctor, Solid Waste Manager

1.2.2 North Carolina Department of Environment and Natural Resources

North Carolina DENR - Raleigh Central Office (RCO)
217 West Jones Street
Raleigh, NC 27603
Phone: (919) 707-8200
Fax: (919) 707-8200

North Carolina DENR - Raleigh Regional Office (RRO)
3800 Barrett Drive
Raleigh, NC 27609
Phone: (919) 571-4700
Fax: (919) 571-4718

North Carolina DENR - Fayetteville Regional Office (FRO)
225 Green Street, Suite 714
Fayetteville, NC 28301
Phone: (910) 486-1541
Fax: (910) 486-0707

Division of Waste Management (DWM) - Solid Waste Section:

Field Operations Branch Head:	Mark Poindexter (RCO)
Eastern District Supervisor:	Dennis Shackelford (FRO)
Waste Management Specialist:	Mary Whaley ((919) 693-5023)

Division of Land Resources - Land Quality Section:

Regional Engineer:	John Holley, P.E. (RRO)

1.3 ACCESS CONTROL

Limiting access to the landfill facility is important for the following reasons:

- Unauthorized and illegal dumping of waste materials is prevented.
- Trespassing, and injury resulting therefrom, is discouraged.
- The risk of vandalism is greatly reduced.

Access to active areas of the landfill will be controlled by a combination of fences and natural barriers, and strictly enforced operating hours. A landfill attendant will be on duty at all times when the facility is open for public use to enforce access restrictions.

1.3.1 Physical Restraints

The site will be accessed by the existing entrance on County Home Road. Scales and a scale house and office are provided at the entrance. All waste will have been weighed prior to being placed in the landfill. The entrances have gates which will be securely locked during non-operating hours.

1.3.2 Security

Frequent inspections of gates and fences will be performed by landfill personnel. The County will arrange for a random security patrol of the main gate to further discourage trespassing. Evidence of trespassing, vandalism, or illegal operation will be reported to the County Solid Waste Manager.

1.4 SIGNAGE

A prominent sign(s) containing the information required by the DWM will be placed at the landfill entrance. This sign(s) will provide information on operating hours, operating procedures, and acceptable wastes. Additional signage will be provided within the landfill complex to distinctly distinguish the roadway to the active landfill unit(s). Service and maintenance roads for use by operations personnel will be clearly marked and barriers (e.g., traffic cones, barrels, etc.) will be provided as required.

1.5 COMMUNICATIONS

Two way radio communication will be maintained between the active landfill unit(s) and the landfill scale house and office. The scale house and office have telephones in case of emergency and for the conduct of day-to-day business. Emergency telephone numbers are displayed in the scale house and office.

1.6 FIRE AND SAFETY

1.6.1 Fire Control

The possibility of fire within the landfill or a piece of equipment must be anticipated in the daily operation of the landfill. A combination of factory installed fire suppression systems and/or portable fire extinguishers will be operational on all heavy pieces of equipment at all times. For larger or more serious outbreaks, the local fire department will respond.

Fires within the landfill will be limited by the use of daily and intermediate cover as a

fire break and control of "hot" loads entering the landfill. Landfill personnel at the scale house will turn away all trucks containing waste that is suspected to be hot. If a hot load is placed on the working face, then the load will be spread as thin as possible and daily cover soil will be immediately placed on the waste to extinguish the fire.

In general, fires that break out close to the surface of the disposal area should be excavated and smothered with cover material. Deep fires should be smothered out by placing moist soil on the surface and by constructing soil barriers around the fire. Where the smothering technique fails, the burning material must be excavated and smothered or quenched with water once the burning material is brought to the surface. Water is usually not effective unless it can be directly applied to the burning material.

For the lined landfill unit(s), in the event a fire occurs in the first lift of waste immediately above the protective cover layer, the possibility of damage to geosynthetics and collection piping exists. Once the fire is extinguished, the residue must be removed to allow limited inspection of the geosynthetics and piping. Damaged sections of geosynthetics, piping, etc. must be removed and replaced with new items of the same or equal material. The new materials must be placed in accordance with the technical specifications and construction quality assurance (CQA) documents prepared for this facility.

The County will verbally notify the DWM (see **Section 1.2.2**) within 24 hours of discovery of a fire within any landfill disposal area. In addition, written documentation describing the fire, the actions carried out to extinguish the fire, and a strategy for preventing future occurrences will be provided to the DWM within 15 days following any such occurrence.

1.6.2 Safety

All aspects of the operation of the landfill facility were developed with the health and safety of the landfill's operating staff, customers, and neighbors in mind. Prior to commencement of operations in the new landfill phase/area, a member of the landfill operating staff will be designated site safety officer. This individual, together with the facility's management will modify the site safety and emergency response program to remain consistent with National Solid Waste Management Association and Occupational Safety and Health Administration (OSHA) guidance.

Safety equipment provided includes equipment rollover protective cabs, seat belts, audible reverse warning devices, hard hats, safety shoes, and first aid kits. Landfill personnel will be encouraged to complete the American Red Cross Basic First Aid Course. Other safety requirements as designated by the County will also be implemented.

1.7 SEVERE WEATHER CONDITIONS

Unusual weather conditions can directly affect the operation of the landfill facility. Some of these weather conditions and recommended operational responses are as follows.

1.7.1 Ice Storms

An ice storm can make access to the landfill dangerous, prevent movement or placement of daily cover, and, thus, may require closure of the landfill until the ice is removed or has melted.

1.7.2 Heavy Rains

Exposed soil surfaces can create a muddy situation in some portions of the landfill during rainy periods. The control of drainage and use of crushed stone on unpaved roads should provide all-weather access for the site and promote drainage away from critical areas. In areas where the aggregate surface is washed away or otherwise damaged, new aggregate should be used for repair.

Intense rains can affect newly constructed drainage structures such as swales, diversions, cover soils, and vegetation. After such a rain event, inspection by landfill personnel will be initiated and corrective measures taken to repair any damage found before the next rainfall.

1.7.3 Electrical Storms

The open area of a landfill is susceptible to the hazards of an electrical storm. If necessary, landfilling activities will be temporarily suspended during such an event. To guarantee the safety of all field personnel, refuge will be taken in the on-site buildings or in rubber-tired vehicles.

1.7.4 Windy Conditions

Landfill operations during a particularly windy period may require that the working face be temporarily shifted to a more sheltered area. When this is done, the previously exposed face will be immediately covered with daily cover.

1.7.5 Violent Storms

In the event of hurricane, tornado, or severe winter storm warning issued by the National Weather Service, landfill operations may be temporarily suspended until the warning is lifted. Daily cover will be placed on exposed waste and buildings and equipment will be properly secured.

1.8 EQUIPMENT REQUIREMENTS

The County will maintain on-site equipment required to perform the necessary landfill activities. Periodic maintenance of all landfilling equipment, and minor and major repair work will be performed at designated maintenance zones outside of the landfill.

1.9 PERSONNEL REQUIREMENTS

At least one member of the landfill supervisory staff will be certified as a Manager of Landfill Operations (MOLO) by the Solid Waste Association of North America (SWANA). Each landfill employee will go through an annual training course (led by supervisory staff) and is certified by SWANA as Landfill Operations personnel. As part of this training, personnel learn to recognize loads which may contain prohibited wastes.

1.10 UTILITIES

Electrical power, water, telephone, and restrooms are provided at the landfill scale house and/or office.

1.11 RECORD KEEPING PROGRAM

The County will maintain the following records in an operating record at the landfill:

A. Waste inspection records (see **Section 2.4**);
B. Daily tonnage records - including source of generation;
C. Waste determination records;
D. Quantity, location of disposal, generator, and special handling procedures for all special wastes disposed of at the site;
E. List of generators and haulers that have attempted to dispose of restricted wastes;
F. Employee training procedures and records of training completed;
G. Documentation of cell activation (see **Section 2.5.2.2**)
H. Leachate records (see **Section 3.3.3**);
I. Gas monitoring results and remediation measures as required (see **Section 3.4.2**);
J. All ground water monitoring and surface water quality information (See the current **Water Quality Monitoring Plan**) including:
    1. Monitoring well construction records;
    2. Sampling dates and results;
    3. Statistical analyses; and
    4. Results of inspections, repairs, etc.
K. Annual landfill reports;
L. All closure and post-closure information, where applicable, including:
    1. Testing;
    2. Certification; and
    3. Recording.
M. Cost estimates or financial assurance documentation.

The operating record will be kept up to date by the Solid Waste Manager or his designee. It will be presented upon request to the DWM for inspection. A copy of this Operations Manual will be kept at the landfill and will be available for use at all times.

SECTION 2.0
WASTE HANDLING OPERATIONS

2.1 OVERVIEW

This section describes the required waste handling operations for the Johnston County Landfill facility. In addition to the MSW and C&D waste disposed of at this facility, the County also processes recyclables, scrap tires, and white goods. These materials are stored at the landfill facility until there are sufficient quantities for pick up by various recycling contractors.

2.2 ACCEPTABLE WASTES

2.2.1 MSW Landfill Units

Only the waste as defined by NCGS 130A-290(a)(18a) generated within the approved service area may be disposed of in the MSW landfill units. In addition, the special wastes described in **Section 2.5.4** may also be disposed of in the MSW landfill units.

2.2.2 C&D Landfill Units

Only the following wastes generated within the approved service area may be disposed of in the C&D landfill unit:

- Construction and Demolition Debris: as defined in 15A NCAC 13B.0532(8) means solid waste resulting solely from construction, remodeling, repair, or demolition operations on pavement, buildings, or other structures. C&D waste does not include municipal and industrial waste that may be generated by on-going operations at buildings or structures.
- Land Clearing and Inert Debris Landfill: as defined in 15A NCAC 13B.0101(54) means a facility for the disposal of land-clearing waste, concrete, brick, concrete block, uncontaminated soil, gravel and rock, untreated and unpainted wood, and yard trash.
- Land Clearing Waste: as defined in 15A NCAC 13B.0101(53) means solid waste which is generated solely from land-clearing activities, limited to stumps, trees, limbs, brush, grass, and other naturally occurring vegetative material.
- Asphalt: in accordance with NCGS 130A-294(m).
- Other Wastes as Approved by the Solid Waste Section of the Division of Waste Management.

In addition, the special wastes (asbestos only) described in **Section 2.5.4** may also be disposed of in the C&D landfill units.

2.3 PROHIBITED WASTES

2.3.1 MSW Landfill Units

The following wastes are prohibited from disposal within the MSW landfill units:

- Whole Scrap Tires
- Used Oil
- White Goods
- Lead Acid Batteries
- Yard Waste
- Construction and Demolition Debris (C&D) (Except when allowed by the County)
- Aluminum Cans

In addition, operating criteria prohibit other materials from disposal within the MSW landfill units. These materials include:

- Hazardous waste as defined by NCGS 130A-290(a)(8), including hazardous waste from conditionally exempt small quantity generators.
- Polychlorinated biphenyls (PCB) wastes as defined in 40 CFR 761 with the exception of trace amounts found in materials such as consumer electronics.
- Bulk or non-containerized liquid wastes unless the waste is household waste other than septic waste and waste oil; or the waste is leachate or gas condensate derived from the MSW landfill unit. A liquid determination will be performed by the paint filter test (see **Appendix A** for apparatus and procedure).
- Containers holding liquid wastes unless the waste is household waste.

2.3.2 C&D Landfill Units

Only wastes, as defined in **Section 2.2.2** above may be accepted for disposal in the C&D landfill units. No other wastes may be accepted.

2.4 WASTE SCREENING PROGRAMS

In order to assure that prohibited wastes are not entering the landfill facility, screening programs have been implemented at the landfill. Waste received at both the scale house entrance and waste taken to the working face is inspected by trained personnel. These individuals have been trained to spot indications of suspicious wastes, including: hazardous placarding or markings, liquids, powders or dusts, sludges, bright or unusual colors, drums or commercial size containers, and "chemical" odors. Screening programs for visual and olfactory characteristics of prohibited wastes are an ongoing part of the landfill operation.

2.4.1 Waste Receiving and Inspection

All vehicles must stop at the scale house located at the entrance of the facility and visitors are required to sign-in. All waste transportation vehicles are weighed and the content of the load assessed. The scale attendant(s) requests from the driver of the vehicle a description of the waste it is carrying to ensure that unacceptable waste is not allowed into the landfill. The attendant(s) then visually checks the vehicle as it crosses the scale. Signs informing users of the acceptable and unacceptable types of waste are posted at the scale house. Once passing the scales, the vehicles are routed to the appropriate landfill unit or other area (convenience center, etc.) as appropriate.

Vehicles are randomly selected for screening at a rate of approximately 1% of industrial, commercial, and institutional vehicles entering the landfill. However, if something looks suspicious is spotted in any waste load, that load is inspected further. The number of loads inspected is determined by the total vehicle count as per scales tickets. Each calendar year the number is recalculated (For example, for 2001, 1% was equal to 252 vehicles; 264 vehicles were actually inspected).

Vehicles selected for inspection are directed to an area of intermediate cover adjacent to the working face where the vehicle will be unloaded. Waste is carefully spread using suitable equipment. An attendant trained to identify wastes that are unacceptable at the landfill inspects the waste discharged at the screening site. If unacceptable waste is found, including wastes generated from outside of the service area, the load will be isolated and secured by berming off the area. For unacceptable wastes that are non-hazardous, the Solid Waste Manager will then notify officials of the DWM (see **Section 1.2.2**) within 24 hours of attempted disposal of any waste the landfill is not permitted to receive in order to determine the proper course of action. For unacceptable wastes that are hazardous, the Hazardous Waste Contingency Plan outlined in **Section 2.4.2** will be followed. The hauler is responsible for removing unacceptable waste from the landfill property.

If no unacceptable waste is found, the load will be pushed to the working face and incorporated into the daily waste cell. All random waste inspections will be documented by landfill staff using the waste screening form provided in **Appendix B**.

In addition to random waste screening described above, waste unloaded on the active face will be inspected by the equipment operators, trained to spot unacceptable wastes, before and during spreading and compaction. Any suspicious looking waste is reported immediately to the designated primary inspector for further evaluation.

2.4.2 Hazardous Waste Contingency Plan

In the event that identifiable hazardous waste or waste of questionable character is detected at the landfill, appropriate equipment, protective gear, personnel, and materials as necessary will be employed to isolate the wastes. The DWM will be notified immediately (see **Section 1.2.2**) that an attempt was made to dispose of hazardous waste

at the landfill. If the vehicle attempting disposal of such waste is known, all attempts will be made to prevent that vehicle from leaving the site or, if the vehicle has left the site, immediate notice will be served on the owner of the vehicle that hazardous waste, for which they have responsibility, has been disposed of at the landfill.

The County will assist the DWM as necessary and appropriate in the removal and disposition of the hazardous waste and in the prosecution of responsible parties. If needed, the hazardous waste will be covered with either on-site soils or other tarping material until such time when an appropriate method can be implemented to properly handle the waste. The cost of the removal and disposing of the hazardous waste will be charged to the owner of the vehicle involved. Any vehicle owner or operator who knowingly dumps hazardous waste in the landfill may be barred from using the landfill.

Should an incident where hazardous waste is found at the landfill occur, the event will be documented by landfill staff using the waste screening form provided in **Appendix B**.

Records of information gathered as part of the waste screening programs will be maintained at the landfill site during its active life and as long as required by the County and the DWM.

2.5 WASTE DISPOSAL

2.5.1 Access

Traffic will be clearly directed to the appropriate active access road. For the active lined landfill unit(s), all vehicles entering the unit will use the active ramp to avoid damaging the liner system. Traffic speed on the ramp should be less than 10 MPH. Rutting of gravel roadway surfaces must be repaired by placement of additional gravel on the roadway and not solely by grading the rut. This will maintain the separator geotextile placed below most gravel roadway surfaces.

The location of access roads during waste placement will be determined by operations personnel in order to reflect waste placement strategy.

2.5.2 General Procedures

For each active landfill unit, waste transportation vehicles will arrive at the working face at random intervals. There may be a number of vehicles unloading waste at the same time, while other vehicles are waiting. In order to maintain control over the unloading of waste, a certain number of vehicles will be allowed on the working face at a time. The actual number will be determined by the truck spotter. This procedure will be used in order to minimize the potential of unloading unacceptable waste and to control disposal activity. Operations at the working face will be conducted in a manner which will encourage the efficient movement of transportation vehicles to and from the working face, and to expedite the unloading of waste.

The approach to the working face will be maintained such that two or more vehicles may safely unload side by side. A vehicle turn-around area large enough to enable vehicles to arrive and turn around safely with reasonable speed will be provided adjacent to the unloading area. The vehicles will back to a vacant area near the working face to unload. Upon completion of the unloading operation, the transportation vehicles will immediately leave the working face area. Personnel will direct traffic necessary to expedite safe movement of vehicles.

Waste unloading at the landfill will be controlled to prevent disposal in locations other than those specified by site management. Such control will also be used to confine the working face to a minimum width, yet allow safe and efficient operations. The width and length of the working face will be maintained as small as practical in order to maintain the appearance of the site, control windblown waste, and minimize the amount of cover required each day. Normally, only one working face will be active on any given day, with all deposited waste in other areas covered by either daily/periodic, intermediate, or final cover, as appropriate.

The procedures for placement and compaction of solid waste include: unloading of vehicles, spreading of waste into 2 foot lifts, and compaction on relatively flat slopes (i.e. 5H:1V max.) using a landfill compactor and a minimum number of three full passes.

Wind screens adjacent to the working face may be used as required to control windblown waste.

The use of portable signs with directional arrows and portable traffic barricades will facilitate the unloading of wastes to the designated disposal locations. These signs and barricades will be placed along the access route to the working face of the landfill or other designated areas which may be established.

2.5.3 Waste Disposal - Lined (MSW or C&D) Landfill Units

2.5.3.1 Cell Operations and Phasing

Each lined landfill unit is divided into cells. Each cell will be filled in sequence until the entire footprint is covered with waste. Phasing drawings are presented in the appropriate permit application for each landfill unit.

It is advantageous to begin to establish final cover grades along the perimeter berms as soon as is possible. This will allow earlier construction of intermediate or final cover to promote "clean" runoff and to spread out final cover construction costs.

2.5.3.2 Cell Activation

Before placing waste in a particular area of any cell, that area must be connected to the leachate collection system (LCS) by removing (or suitably shredding by tracking with a dozer) geosynthetic rain cover (if any) and/or making any required piping connections such that all liquid collected in that area will flow to the sump. Next, just ahead of waste placement operations, the Type GT-S geotextile placed over the gravel columns is to be cut and removed such that waste will be placed in direct contact with the coarse aggregate.

Once an area has reached its effective capacity, operations will move to the next scheduled area. Prior to placing waste in a new area, it must be connected to the LCS as described above.

See **Appendix C** for cell activation forms to be used in the documentation of cell activation activities.

2.5.3.3 Placement of Initial Lift

During waste placement operations, the landfill liner system is most vulnerable during the placement of the first lift of waste. The first lift of waste should be comprised of select loads spread on top of the protective cover layer. These select loads must be free of long or large pieces of waste that may push through the protective cover layer and damage the liner system. Workers will be positioned near the working face to check for any waste which could possibly penetrate the protective cover layer. The first lift should be a minimum of four (4) feet thick and provide sufficient area for at least one day's operation without placing other areas of the liner in jeopardy.

The side slopes of the liner system are also vulnerable during placement of the first lift of waste. As with the bottom slopes, the first lift of waste against the side slopes should be comprised of select loads.

In the event that the landfill staff identifies any damage to any part of the landfill's liner system, they should immediately initiate its repair. Additionally, they should document the damage and the repair as a part of the operating record.

2.5.3.4 Equipment Operations Within the Landfill

Both the facility’s operational vehicles and waste transportation vehicles must be restricted as follows within the lined landfill:

- Equipment operation directly on the protective cover will be limited to rubber-tired vehicles having a maximum ground contact, i.e., tire pressure, of less than 32 psi.
- A minimum vertical separation of 3 feet will be maintained between the

geomembrane liner and all waste transportation vehicles.

- A minimum vertical separation of 5 feet will be maintained between the geomembrane liner and waste compactors.

The operation of vehicles within those portions of the landfill not actively receiving waste should be restricted to activities associated with erosion and sedimentation control.

2.5.4 Special Waste Management

2.5.4.1 Asbestos Management (MSW or C&D Landfill Units)

The County may dispose of asbestos within either the MSW or C&D landfill units. Asbestos will only be accepted if it has been processed and packaged in accordance with State and Federal (40 CFR 61) regulations. Asbestos will arrive at the site in vehicles that contain only the asbestos waste and only after advance notification by the generator.

Once the hauler brings the asbestos to the landfill, the hauler will be directed to the designated asbestos disposal area by operations personnel. The designated disposal area will be prepared by operations personnel by leveling a small area using a dozer or loader. Prior to disposal, the landfill operators will stockpile cover soil near the designated asbestos disposal area. The volume of soil stockpiled will be sufficient to cover the waste and to provide any berms, etc. to maintain temporary separation from other landfill traffic.

Once placed in the prepared area, the asbestos waste will be covered with a minimum of 18 inches of cover soil placed in a single lift. The surface of the cover soil will be compacted and graded using a tracked dozer or loader. The landfill compactor will be prohibited from operating over asbestos disposal areas until at least 18 inches of cover are in-place.

The landfill staff will record the approximate location and elevation of the asbestos waste once cover is in-place. The Solid Waste Manager will then review pertinent disposal and location information to assure compliance with regulatory requirements and enter the information into the Operating Record.

Once disposal and recording for asbestos waste is completed, the disposal area may be covered with waste. No excavation into designated asbestos disposal areas will be permitted.

In general, for the lined landfill unit(s), no asbestos will be stored over gravel columns or over sump areas in order to minimize the potential for future disturbance.

2.5.4.2 Sewage Sludge Management (MSW Landfill Units)

Sewage sludge may be accepted for disposal within the MSW landfill units in accordance with Federal and State requirements. Sewage sludge will be co-disposed along with other wastes if the sludge passes the liquids restriction criteria (i.e., the Paint Filter Test) and has an acceptable Toxicity Characteristic Leaching Procedure (TCLP) test. Such testing will be the responsibility of the generator, but landfill staff may conduct spot testing.

In order to minimize the potential for clogging of the leachate collection and removal system, sewage sludge will not be placed within the first lift of waste. Sewage sludge may also be used as a soil conditioner incorporated into the vegetative soil layer of the final cover.

2.5.4.3 Spoiled Food and Animal Waste (MSW Landfill Units)

The disposal of spoiled foods, animal carcasses, and other animal wastes within the MSW landfill units will be handled as follows. The generator of the material must call in advance to the landfill, and a determination will be made as to whether or not the waste will be accepted. If the waste is approved, the generator will present the waste at a predetermined time. An area for disposal will already have been prepared and the waste will be covered immediately.

2.5.5 Daily or Periodic Cover

2.5.5.1 MSW Landfill Units

At the completion of waste placement each day, a 6 inch layer of earthen material or approved alternate daily cover (i.e. tarps (see **Section 2.5.5.3)**, etc.) will be placed over the working face. This daily cover is intended to control vectors, fire, odors, and blowing litter. If the County should desire to use an alternate daily cover, a formal request and an appropriate demonstration will be made to the DWM.

2.5.5.2 C&D Landfill Units

At the completion of waste placement each week, or sooner if the area of exposed waste exceeds one acre in size, a 6-inch layer of earthen material or other material as approved by the DWM will be placed over the exposed waste. This periodic cover is intended to control vectors, fire, odors, and blowing debris.

2.5.5.3 Tarpomatic Alternative Daily Cover

The Tarpomatic apparatus consists of a 60' wide x 8' deep x 10' tall tubular steel support frame, a diesel engine, a hydraulic pump, stationary and remote control boxes, and a detachable 50 foot tarp spool. The frame has two carrier arms at the

top that will latch over the blade of a compactor (or dozer) allowing the apparatus to become mobile when needed. Each spool may carry three 40' x 100' tarps which provide up to 12,000 square feet of coverage. Tarps are made from a woven high density polyethylene fire retardant material with reinforced seams and edges and connecting straps on each end. Heavy steel chains are installed in pockets throughout the tarp to provide ballast to prevent wind uplift. Carrier arm adjustment, tarp spool drive, and spool locking levers are hydraulically controlled and are activated by the remote control box located inside the compactor cab.

To operate the Tarpomatic, the operator will drive the compactor up to the apparatus and align the blade with the carrier arms. The blade is then lifted upward into the carrier arms, raising the frame off the ground. Once the operator has positioned the compactor and Tarpomatic over the area of waste to be covered, each tarp is applied to the surface while backing over the waste. The tarp is unrolled at the same rate as the compactor movement so that it may be applied to the surface without pulling the tarp through the waste. Once the tarp is completely applied, the operator will detach the tarp straps and set the frame to the side. Tarps are rolled back onto the spool in the reverse order.

Typically, the Tarpomatic is used to cover over the daily working face only. As migration occurs throughout cell development, all traffic areas and side slopes are covered with daily or intermediate cover soil. Severe thunderstorms, high winds, or freezing precipitation may prohibit the use of the Tarpomatic. Daily or intermediate cover soil is used as cover every Friday or whenever inclement weather is forecasted.

Tarps that become damaged will be repaired or replaced as necessary. The County typically maintains 4 tarps on 2 spools and replaces tarps every 2 years.

2.5.6 Intermediate Cover

A 12 inch layer of soil cover should be placed on all waste surfaces that have not received waste in 30 days but are below final elevation. This intermediate cover should be seeded immediately and graded such that all precipitation run-off is channeled to the surface water systems.

2.5.7 Height Monitoring

Approximately every month, the landfill staff will monitor landfill top and side slope elevations with a level. When such elevations approach design grades, the final top-of-waste grades will be staked to limit over-placement of waste.

2.6 YARD WASTE PROCESSING AREA OPERATIONS

The operation of the yard waste processing area is as follows:

Acceptable wood and yard wastes are stockpiled to an approximate height of 10 feet over an area of approximately 1 acre (approximate weight of 1,500 to 2,000 lbs.). At that time a contractor is brought in to grind the waste. Once the waste is ground and becomes mulch, it is used either around the site, primarily for surface stabilization, or placed in windrows to be given to the public or otherwise used in the future. A full time attendant looks over both the yard waste processing area and the convenience center operations.

Adjacent to the yard waste processing area, there is approximately 14 acres available within two former borrow areas that are designated for use in the handling of debris from a natural disaster.

2.7 CONVENIENCE CENTER OPERATIONS

The operation of the citizen's convenience center is as follows:

The convenience center is set up with up to eight 40 yard roll-off containers for the collection of MSW (small loads) and recyclables. The County currently typically separately collects aluminum cans, newspaper, cardboard, mixed no. 1 and no. 2 plastics, and brown, green, and clear glass. The convenience center also includes collection facilities for white goods, used tires, waste oil, and batteries.

The white goods area currently occupies approximately a 50 foot by 100 foot area. County personnel remove the Freon, as necessary, and load the white goods into three to four 40 yard roll-off containers. Typically, every Wednesday, the County hauls the full containers to a local salvage yard, where the white goods can be recycled.

Used tires are collected at the convenience center in up to three tire trailers. Once one or more trailers are full, the used tires are taken to a tire recycler for recycling.

A full time attendant looks over both the convenience center and yard waste processing area operations.

SECTION 3.0
ENVIRONMENTAL MANAGEMENT

3.1 OVERVIEW

This section reviews the overall environmental management tasks required for the successful operation of the landfill facility. Emphasis is given to the supplemental tasks required for the lined landfill units.

3.2 SURFACE WATER CONTROL

As used herein, the definition of "surface water" is water which results from precipitation or site run-on that has not contacted the waste.

Proper control of surface water at the landfill will accomplish the following goals:

- Prevent the run-on of surface water into the lined landfill unit(s) or the active face(s);
- Prevent the run-off of surface water that has come into contact with the waste (i.e. leachate);
- Limit the erosion caused by surface waters;
- Limit sediments carried off-site by surface waters; and
- Maximize the SEPARATION of SURFACE water from LEACHATE.

Separate erosion and sedimentation control plans have been provided for the various landfill units. These plans describe both short and long term engineered features and practices for preventing erosion and controlling sedimentation at this site. The following is a brief discussion of some of these features and practices, focusing more on the landfill units.

3.2.1 Surface Water Run-On Control

The perimeter berms and/or perimeter channels around the landfill unit(s) are designed to prevent the run-on of surface water from adjacent land into the landfill. Additional structures such as diversion berms, channels, down pipes, etc. carry surface water away from the landfill.

3.2.2 Active Face Run-Off Control - MSW Landfill Units

Particular care is required to ensure that surface water coming from the active face, e.g. having potential contact with the waste, is captured by the leachate collection system (LCS). Only run-off from waste surfaces that have received adequate cover is not considered leachate and should be directed to the stormwater drainage system where

practical.

3.2.3 Erosion Control

The serviceability of the landfill relies heavily on soil berms, barrier layers, and agricultural layers that are readily eroded by flowing water. Erosion control provisions incorporated in the landfill include the following:

- The slope of the working face must be no steeper than 5H:1V where practical to limit erosion of the daily cover.
- Intermediate cover that has been exposed for more than 30 days must be seeded immediately and repaired when erosion features are identified.
- Drainage breaks (diversion berms, rain gutters, etc.) are provided on the final cover to limit the flow length of run-off.
- Water collected by each drainage break is routed to stormwater drainage channels or down pipes so that the run-off volume does not accumulate going down the slope.
- The vegetative soil layer placed over the final cover must be seeded immediately.

Additional erosion control measures have been taken within the drainage channels and at points of stormwater discharge. All final cover should be inspected regularly for erosion damage and promptly repaired.

3.2.4 Sedimentation Control

Stormwater run-off from the landfill unit(s) is conveyed to one of the on site sediment basins and/or traps. These basins and/or traps should be inspected regularly for sediment build-up or erosion damage. The basins and/or traps should be cleaned out when sediments fill the lower half of the basin.

3.2.5 Separation of Stormwater/Leachate - Lined (MSW and C&D) Landfill Units

The stormwater separation system is accomplished by dividing the lined landfill units into separate cells to reduce the volume of leachate generated and minimize the impoundment of stormwater within the landfill. The separation system allows stormwater in cells which have not yet received waste to be pumped out of the landfill to perimeter drainage features. During activation of a cell, the Owner will connect the cell to the LCS as discussed in **Section 2.5.3.2**.

3.3 LEACHATE MANAGEMENT - LINED (MSW AND C&D) LANDFILL UNITS

The leachate management system for the existing and proposed lined landfill units consists of the LCS, the leachate discharge piping, pumps, valve boxes, valves, and the existing leachate storage lagoon.

Leachate from the lined landfill units is collected in the leachate sumps at the low end(s) of each unit. Leachate collected in each sump is pumped to the leachate storage lagoon via a HDPE force main (except for Phase 5 which drains via a HDPE gravity main). From the storage lagoon, the leachate is pumped via force main to a County-owned wastewater treatment plant (WWTP) or back into the Phase 5 MSW landfill unit as part of an approved leachate recirculation plan (See **Appendix D**). Refer to the appropriate permit application for a detailed discussion and details of the leachate management system for each lined landfill unit.

The County has approval to modify the existing leachate storage lagoon for use as an equalization basin for raw wastewater. These modifications are described in **Section 3.3.6**.

3.3.1 Leachate Collection System (LCS)

A blanket drainage layer (either natural and/or geosynthetic drainage media) covers the liner system to collect and remove leachate draining from the waste. In addition, a large flow capacity network of perforated pipe and gravel drains is constructed in the blanket drain. The LCS is designed to remove inflow from a 25-year, 24-hour rainstorm. As such, its capacity is very large compared to that required to accommodate routine leachate generation rates once waste covers the landfill footprint.

The LCS has been designed to minimize the impact of long-term biological clogging as follows:

- Cleanouts are provided on the major perforated leachate collection pipes;
- No geotextiles will be used between the waste and the gravel columns; and
- The use of coarse aggregate around collection pipes (gravel columns) allows hydro-washing of the pipe and aggregate to remove biological growth.

3.3.1.1 Gravel Column Maintenance

The exposed surface of the drainage aggregate should be inspected monthly and after each large rain storm to check for buildup of sediment on the aggregate. Sediment buildup must be periodically removed carefully with a backhoe. Aggregate that is removed must be replaced with new clean material. Per **Section 2.5.3.2**, the Type GT-S geotextile overlying the gravel columns must be removed just prior to the placement of waste over that portion of gravel column.

3.3.1.2 Collection Pipe Cleanout

Remote camera inspection and flushing (if necessary) of all leachate collection piping accessible with a cleanout port will be performed every 3 years or earlier if an abnormal reduction in leachate production is observed. An abnormal reduction is defined as a drop in monthly leachate production of 30% or more as compared to the monthly average over the prior 6 month period and which does not appear to be the result of a reduction in rainfall, the covering of new cell areas, etc. If piping is mostly clean at the initial 3 year inspection, the County may petition the DWM to increase the inspection frequency to 5 year intervals.

The locations of the collection system that have sediment or biological growth buildup will be cleaned using high pressure water jetting equipment. The water jetting system should generate greater than 2,000 psi water pressure. Use of the high pressure water jetting equipment should be limited to only those portions of the piping system with buildup.

3.3.1.3 Leachate Removal

As constructed, leachate is collected in one or more sumps at the low points of the landfill and is removed from the landfill via a side riser pump or through a gravity penetration. The leachate is routed to the leachate storage lagoon via a HDPE force main or gravity main.

Under normal conditions, the County will remove (via forcemain) leachate from the storage lagoon at a rate to maintain a typical volume of 3,500,000 gallons (approximate 6.5 foot depth), or less, of leachate in the lagoon (see also **Section 3.3.6**). This allows ample volume in the lagoon to handle the anticipated "surge" event caused by a design storm and minimizes the potential for ponding within the landfill. Additional draw-down of the lagoon will be performed in advance of predicted heavy rainfall (tropical storm, hurricane, etc.).

3.3.1.4 Operation and Maintenance of Leachate Pumps and Storage Lagoon

Operation and maintenance of leachate pumps shall be in accordance with the appropriate manufacturer's recommendations. If required, the leachate storage lagoon may require cleanout of sediment and/or maintenance of aerators. The County Solid Waste Manager or his designee will be responsible for following and documenting, as required, these activities.

3.3.2 Leak Detection System - Phase 4A MSW Landfill Unit

A leak detection system (LDS) is part of the Phase 4A MSW landfill unit. The purpose of the LDS is to provide rapid detection of a major breach in the primary liner system and to limit the head on the secondary liner to less than the thickness of the LDS.

For Phase 4A, the LDS consists of a layer of drainage geocomposite directly overlying the secondary LLDPE geomembrane and a series of four leak detection trenches. Flow that is collected in the leak detection trenches is routed through 4 inch diameter HDPE piping to a pump station. The LDS pump station consists of a prefabricated HDPE manhole, valving, and submersible pumps. Leachate collected in the LDS pump station is pumped to the existing leachate storage lagoon via the same force main as leachate collected in the LCS described above.

The LDS has been designed with an Action Leakage Rate (ALR) of 3,000 gallons per day. Should leakage collected in the LDS exceed the ALR based on routine flowmeter readings from the LDS pump station, the County will take steps (placement of soil cover, tarps, etc.) to limit leachate generation from in-place waste.

3.3.3 Leachate Quality Sampling

Semi-annual leachate quality sampling and analysis will be performed during operation of the lined landfill units. Samples will be recovered as grab samples from the following locations:

- MSW Phase 5: Sample from existing gravity line in leachate manhole;
- MSW Phase 4A (Leachate Collection System): Sample from side risers;
- MSW Phase 4A (Leak Detection System): Sample from leak detection pump station; and
- C&D Area 2: Sample from side risers.

The parameters to be analyzed will include BOD, COD, temperature, conductivity, pH, ammonia, suspended solids, Appendix I constituents, sulfates, and nitrates.

3.3.4 Record Keeping

Accurate records for the following will be maintained at the landfill in accordance with **Section 1.11**.

Leachate Generation (Monthly):

- Phase 5 (Leachate storage lagoon pump station flowmeters minus flow from Phase 4A);
- Phase 4A (Leachate collection system flowmeter); and
- Phase 4A (Leak detection system pump station flowmeter).

Leachate Quality (Quarterly and/or Semi-Annual):

- Phase 5 (Quarterly during active leachate recirculation);
- Phase 4A (Leachate Collection System); and
- Phase 4A (Leak Detection System).

3.3.5 Leachate Contingency Plan

In the unlikely event that leachate levels within the existing leachate storage lagoon approach the freeboard capacity, due to unforeseen events, the DWM will be verbally notified (see **Section 1.2.2**) and the leachate flow will be valved off and temporarily stored in the landfill until the level of leachate in the lagoon can be lowered by direct pumping. Written documentation describing the unforeseen events, the actions carried out to remove the stored leachate, and a strategy for preventing future occurrences will be provided to the DWM within 30 days following any such occurrence.

3.3.6 Modification of Leachate Pond as an Equalization Basin

The existing leachate storage lagoon (pond) has an approximate capacity of 4.2M gallons with 2 feet of freeboard. Due to the large size of the pond and typical leachate generation at the site (between 1.26M and 3.05M gallons per year based on 2004 and 2005 data), the capacity of this pond has been very much underutilized. The County received approval in October 2008 to modify the existing leachate storage lagoon for use as an equalization basin for raw wastewater. Most of the proposed modifications will be on the southwest side of the existing leachate pond.

The maximum water level in the modified pond will be maintained at approximately elevation 151 to 152. With a top of pond elevation of approximately 155, this will provide a volume of at least 1 foot (approximately 650,000 gallons) below the required 2 feet of freeboard under typical conditions. This capacity is much greater than the anticipated surge volume from a newly operational landfill unit. Additionally, considering the very large pumping capacity (two 1,300 GPM pumps) of the existing raw sewage pump station which will be connected to the pond, the ability to handle leachate generation at the site is very high.

The modified capacity and/or operation of the leachate pond as an equalization basin will not affect the County's ability to draw-down the basin in advance of predicted heavy rainfall (tropical storm, hurricane, etc.).

3.4 WATER QUALITY MONITORING

The monitoring program and procedures outlined in the current Water Quality Monitoring Plan will be followed for the monitoring of site groundwater monitoring wells and surface water monitoring locations. The results of the water quality monitoring program will be placed in the facility operating record as described in **Section 1.11**.

3.5 LANDFILL GAS (LFG) MANAGEMENT

3.5.1 MSW Landfill Units

A landfill gas (LFG) management system is included as part of the design of the MSW landfill units. Refer to the appropriate permit application for a detailed discussion and details of the LFG management system for each landfill unit.

As the operation and maintenance of this system involves contact with explosive gases, operational staff involved with the operation and maintenance of this system should be specifically trained in the management and response for situations such as fire or explosion, confined space, drilling, and overhead hazards, or any other mechanical hazards addressed by the equipment Manufacturer's literature. Although this manual does not address the operation of the LFG management system, reference is made to the Landfill Gas Operation and Maintenance Manual of Practice prepared by the Solid Waste Association of North America (SWANA)[1], which provides a general body of knowledge concerning the operation and maintenance of these systems.

3.5.2 C&D Landfill Units

Landfill gas (LFG) generated from the C&D landfill unit will be vented using passive vents placed at the time of closure. Refer to the appropriate permit application for details of these vents.

3.6 LANDFILL GAS (LFG) MONITORING PLAN

The County will implement a routine landfill gas (LFG) monitoring program for both MSW and C&D landfill units to ensure that methane concentrations do not exceed 25 percent of the lower explosive limit (LEL) (1.25% methane (CH_4)) in facility structures, or 100 percent of the LEL (5% CH_4) at property boundaries. LFG monitoring activities and remedial actions for concentrations exceeding these requirements will be in accordance with each unit's current landfill gas monitoring plan.

3.6.1 Record Keeping

Results of LFG monitoring and description of any remedial measures will be placed in the facility operating record as described in **Section 1.11**.

[1] SWANA (1997), Landfill Gas Operation and Maintenance Manual of Practice, SR-430-23070, Solid Waste Association of North America, Silver Spring, MD, March 1997.

3.7 VECTOR CONTROL

3.7.1 MSW Landfill Units

Control of insects, rodents, and birds will be accomplished by compaction of the waste and the use of daily cover. Spilled or wind-blown debris along the access road will be cleaned up daily and placed in the landfill. If vector control becomes a problem, additional measures will be taken to ensure the protection of human health.

3.7.2 C&D Landfill Units

Due to the nature of the waste disposed in the C&D landfill units, vector control is not anticipated to be of concern. Note that the use of periodic cover will discourage animals from nesting in the waste.

3.8 ODOR CONTROL

3.8.1 MSW Landfill Units

Odorous or potentially odorous materials will be covered as soon as possible to avoid odor problems. If odor control becomes a problem, additional measures will be taken to ensure odor control.

3.8.2 C&D Landfill Units

Due to the nature of the waste disposed in the C&D landfill units, odor control is not anticipated to be of concern.

3.9 DUST CONTROL

Dust related to waste hauler traffic on the access roads will be minimized by using a water truck to limit dust on the gravel portion of the road. Dust generated by excavation of cover soil will be limited by watering the cut soil areas if accessible to the water truck.

3.10 IRRIGATION OF RECLAIMED WASTEWATER

The County is approved to spray irrigate reclaimed wastewater at the landfill. The operation of the spray irrigation system will be as described in **Appendix E**. The operation of the system will also follow the requirements of the current permit issued by the NC Division of Water Quality.

FOR REGULATORY REVIEW ONLY

NOT FOR BIDDING OR CONSTRUCTION

PARCEL REFERENCES	
PARCEL	COUNTY DEED BOOK REFERENCE
1	D.B. 775, PG. 410
2	D.B. 952, PG. 376
3	D.B. 763, PG. 525
4	D.B. 1228, PG. 652
5	D.B. 1215, PG. 747
6	D.B. E-3, PG. 1

NOTE:
PROPERTY INFORMATION FROM "MAP FOR JOHNSTON COUNTY" PREPARED BY L. DENNIS LEE, P.A., SMITHFIELD, NC, DATED MARCH 22, 1994, AS REVISED THROUGH JANUARY 30, 1995 (COUNTY PLAT BOOK 59, PAGE 437) AND COUNTY REGISTER OF DEEDS OFFICE.

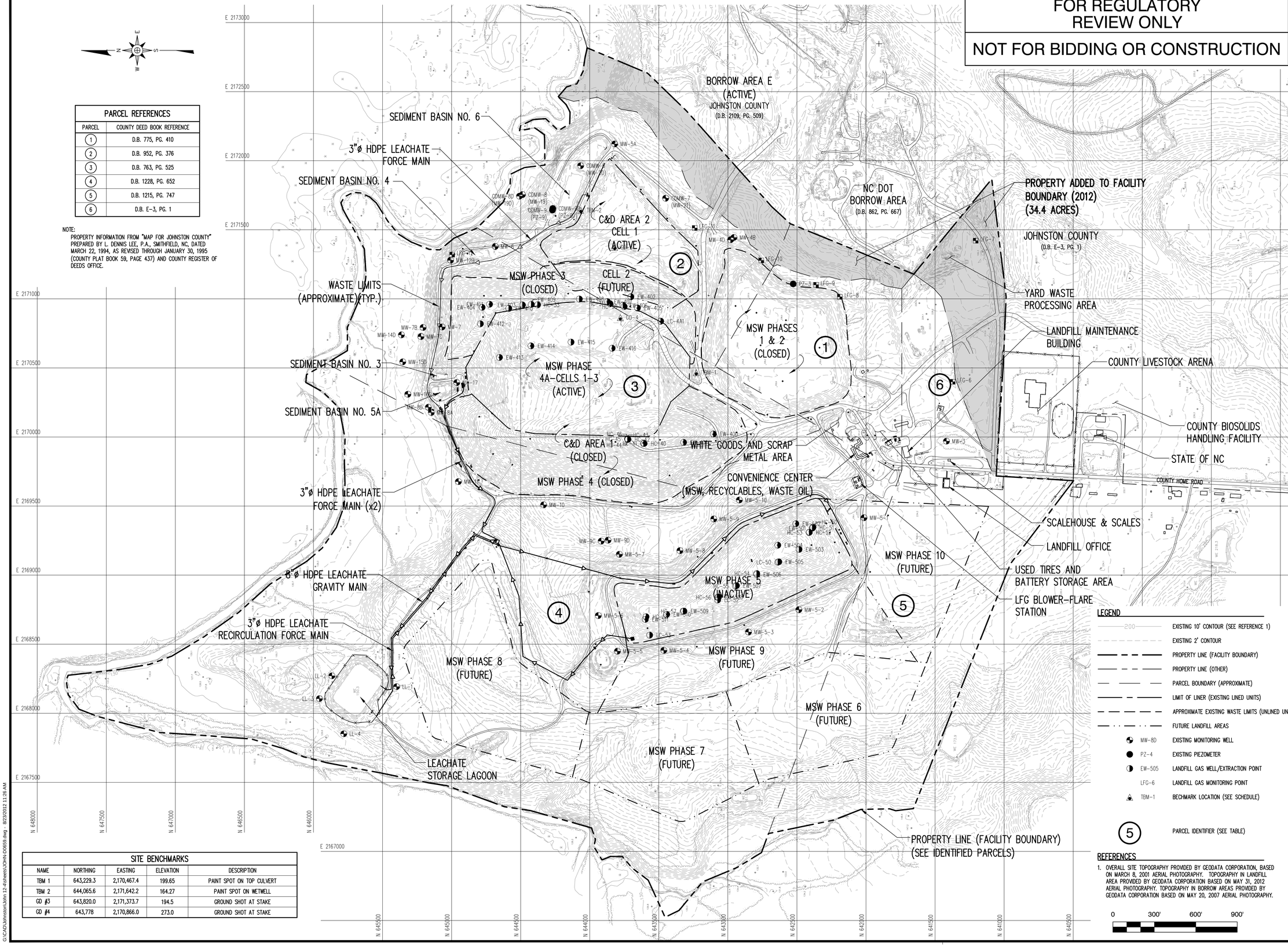

LEGEND

200	EXISTING 10' CONTOUR (SEE REFERENCE 1)
	EXISTING 2' CONTOUR
	PROPERTY LINE (FACILITY BOUNDARY)
	PROPERTY LINE (OTHER)
	PARCEL BOUNDARY (APPROXIMATE)
	LIMIT OF LINER (EXISTING LINED UNITS)
	APPROXIMATE EXISTING WASTE LIMITS (UNLINED UNITS)
	FUTURE LANDFILL AREAS
MW-8D	EXISTING MONITORING WELL
PZ-4	EXISTING PIEZOMETER
EW-505	LANDFILL GAS WELL/EXTRACTION POINT
LFG-6	LANDFILL GAS MONITORING POINT
TBM-1	BECHMARK LOCATION (SEE SCHEDULE)
5	PARCEL IDENTIFIER (SEE TABLE)

REFERENCES

1. OVERALL SITE TOPOGRAPHY PROVIDED BY GEODATA CORPORATION, BASED ON MARCH 8, 2001 AERIAL PHOTOGRAPHY. TOPOGRAPHY IN LANDFILL AREA PROVIDED BY GEODATA CORPORATION BASED ON MAY 31, 2012 AERIAL PHOTOGRAPHY. TOPOGRAPHY IN BORROW AREAS PROVIDED BY GEODATA CORPORATION BASED ON MAY 20, 2007 AERIAL PHOTOGRAPHY.

0 300' 600' 900'

SITE BENCHMARKS				
NAME	NORTHING	EASTING	ELEVATION	DESCRIPTION
TBM 1	643,229.3	2,170,467.4	199.65	PAINT SPOT ON TOP CULVERT
TBM 2	644,065.6	2,171,642.2	164.27	PAINT SPOT ON WETWELL
GD #3	643,820.0	2,171,373.7	194.5	GROUND SHOT AT STAKE
GD #4	643,778	2,170,866.0	273.0	GROUND SHOT AT STAKE

PREPARED FOR:

JOHNSTON COUNTY
NORTH CAROLINA
DEPARTMENT OF
PUBLIC UTILITIES

PREPARED BY:

NC LIC. NO. C-0828 (ENGINEERING)
SMITH+ GARDNER
ENGINEERS
14 N. Boylan Avenue, Raleigh NC 27603 | 919.828.0577

SEAL

SEAL

REV.	DATE	DESCRIPTION

PROJECT TITLE:

JOHNSTON COUNTY LANDFILL

DRAWING TITLE:

EXISTING AND PROPOSED LANDFILL UNITS AND SOLID WASTE MANAGEMENT ACTIVITIES

DESIGNED: P.K.S.	PROJECT NO: JOHN 12-4
DRAWN: C.T.J.	SCALE: AS SHOWN
APPROVED:	DATE: AUG. 2012
FILENAME: JOHN-D0659	
SHEET NUMBER:	DRAWING NUMBER: FIG.1

C:\C-CAD\Johnston\John 12-dsheets\JOHN-D0659.dwg - 8/23/2012 11:26 AM

Appendix A

EPA Method 9095

Paint Filter Liquids Test

METHOD 9095
PAINT FILTER LIQUIDS TEST
From EPA SW-846

1.0 SCOPE AND APPLICATION

1.1 This method is used to determine the presence of free liquids in a representative sample of waste.

1.2 The method is used to determine compliance with 40 CFR 264.314 and 265.314.

2.0 SUMMARY OF METHOD

2.1 A predetermined amount of material is placed in a paint filter. If any portion of the material passes through and drops from the filter within the 5 minute test period, the material is deemed to contain free liquids.

3.0 INTERFERENCES

3.1 Filter media were observed to separate from the filter cone on exposure to alkaline materials. This development causes no problem if the sample is not disturbed.

4.0 APPARATUS AND MATERIALS

4.1 Conical paint filter: Mesh number 60 (fine meshed size). Available at local paint stores such as Sherwin-Williams and Glidden for an approximate cost of $0.07 each.

4.2 Glass funnel: If the paint filter, with the waste, cannot sustain its weight on the ring stand, then a fluted glass funnel or glass funnel with a mouth large enough to allow at least 1 inch of the filter mesh to protrude should be used to support the filter. The funnel is to be fluted or have a large open mouth in order to support the paint filter yet not interfere with the movement, to the graduated cylinder, of the liquid that passes through the filter mesh.

4.3 Ring stand and ring or tripod.

4.4 Graduated cylinder or beaker: 100-mL.

5.0 REAGENTS

5.1 None.

6.0 SAMPLE COLLECTION, PRESERVATION, AND HANDLING

6.1 All samples must be collected according to the directions in Chapter Nine of EPA SW-846.

6.2 A 100 mL or 100 g representative sample is required for the test. If it is not possible to obtain a sample of 100 mL or 100 g that is sufficiently representative of the waste, the analyst may use larger size samples in multiples of 100 mL or 100 g, i.e., 200, 300, 400 mL or g. However, when larger samples are used, analysts shall divide the sample into 100-mL or 100-g portions and test each portion separately. If any portion contains free liquids, the entire sample is considered to have free liquids.

7.0 PROCEDURE

7.1 Assemble test apparatus as shown in Figure 1.

7.2 Place sample in the filter. A funnel may be used to provide support for the paint filter.

7.3 Allow sample to drain for 5 minutes into the graduated cylinder.

7.4 If any portion of the test material collects in the graduated cylinder in the 5-min. period, then the material is deemed to contain free liquids for purposes of 40 CFR 264.314 and 265.314.

8.0 QUALITY CONTROL

8.1 Duplicate samples should be analyzed on a routine basis.

9.0 METHOD PERFORMANCE

9.1 No data provided.

10.0 REFERENCES

10.1 None required.

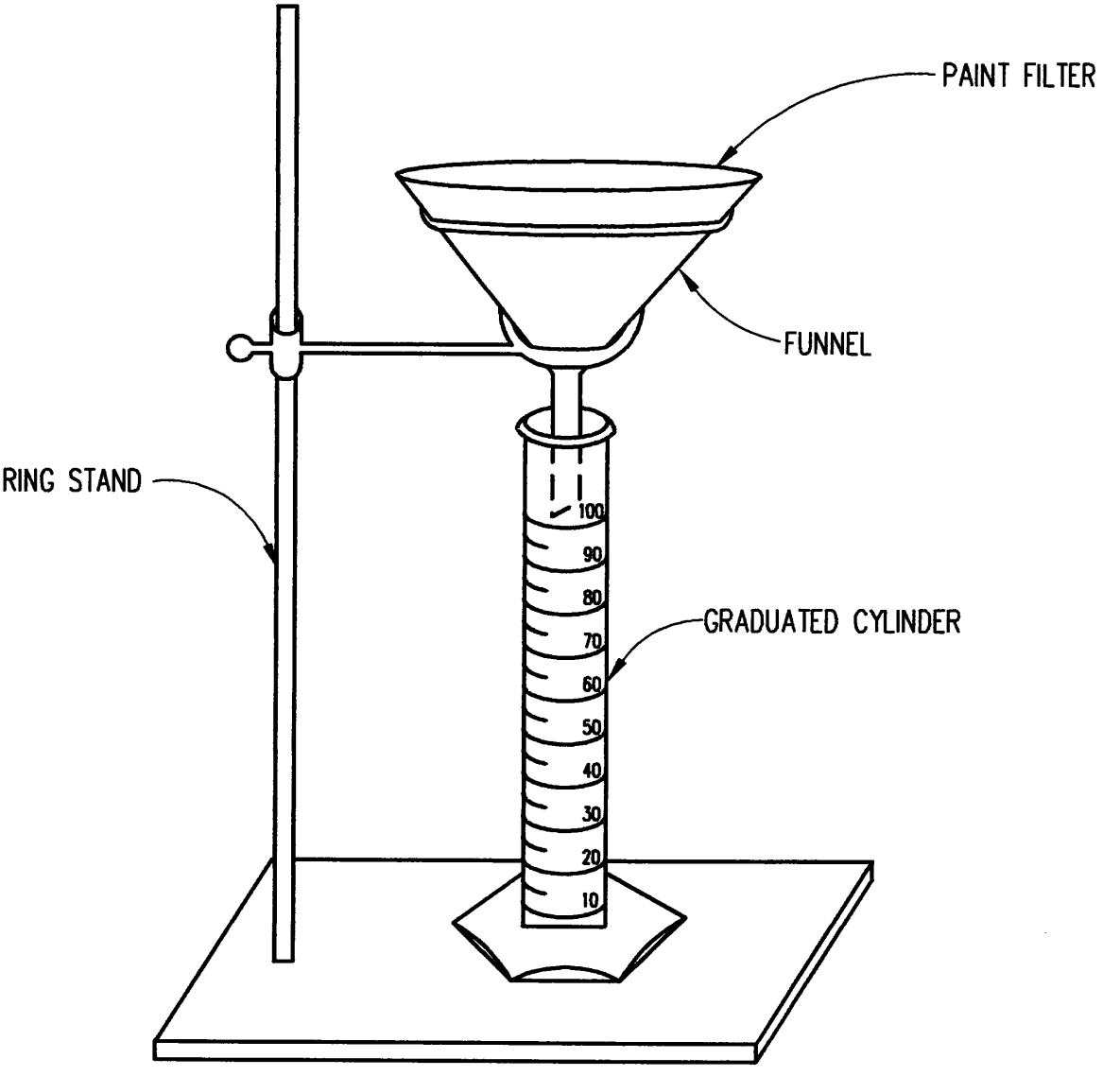

FIGURE 1. PAINT FILTER TEST APPARATUS.

METHOD 9095
PAINT FILTER LIQUIDS TEST

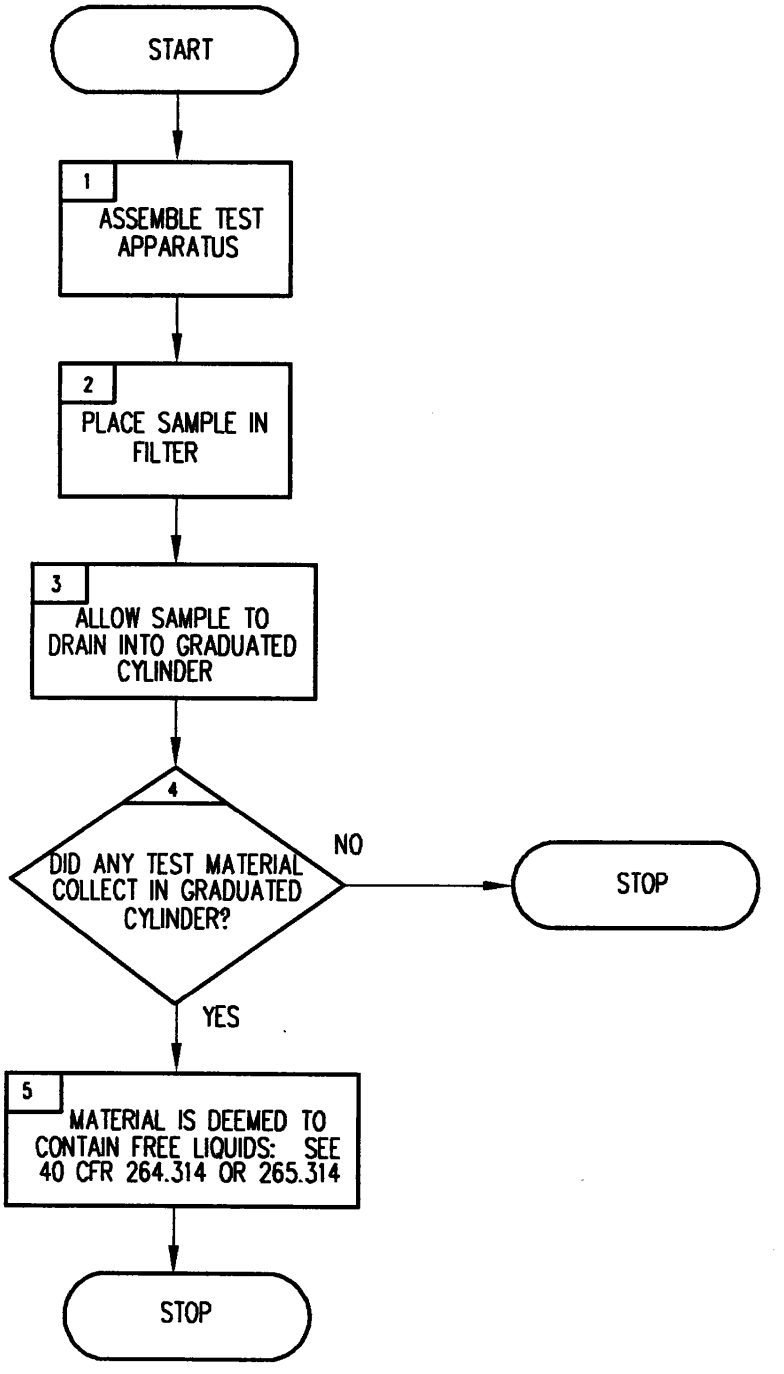

Appendix B

Waste Screening Form

Johnston County Department of Public Utilities
Johnston County Landfill Facility
Permit No. 51-03
(919) 938-4750

WASTE SCREENING FORM

Day / Date: _____ Time Weighed in: _____
Truck Owner: _____ Driver Name: _____
Truck Type: _____ Vehicle ID / Tag No: _____
Weight _____ Tare: _____
Waste Generator / Source: _____

Reason Load Inspected: Random Inspection _____ Staff Initials _____
Detained at Scales _____ Staff Initials _____
Detained by Operating Staff _____ Staff Initials _____

Inspection Location: _____

Approved Waste Determination Form Present? Yes _____ No _____ N/A _____

Description of Load: _____

Load Accepted (signature) _____ Date _____
Load Not Accepted (signature) _____ Date _____

Reason Load Not Accepted (complete only if load not accepted)

Description of Suspicious Contents: Color _____ Haz. Waste Markings _____
Texture _____
Drums Present _____ Smell _____
Est. Cu. Yds. Present in Load _____
Est. Tons Present in Load _____

Johnston County Emergency Management Contacted? Yes _____ No _____

Company or Authority Contacted? _____
Hazardous Materials Present: _____

Hauler Notified (if waste not accepted) Phone: Time Contacted:
Other Observations: _____

Final Disposition
Signed _____ Date _____
Waste Screening Inspector or Solid Waste Manager

Attach related correspondence to this form.
File completed form in Operating Record.

Appendix C

Cell Activation Forms

JOHNSTON COUNTY MSW LANDFILL - PHASE 4A
CELL ACTIVATION FORM

Date: _____

Cell: _____

Size of Geosynthetic Rain Cover Removed (Length/Width): _____

Length of Type GT-S Geotextile Removed from Gravel Column(s): _____

Remarks: _____
_____
_____
_____
_____
_____
_____

Signed: _____

Sketch:

JOHNSTON COUNTY C&D LANDFILL - AREA 2
CELL ACTIVATION FORM

Date: _____

Cell: _____

Size of Geosynthetic Rain Cover Removed (Length/Width): _____

Length of Type GT-S Geotextile Removed from Gravel Column(s): _____

Remarks: _____
_____
_____
_____
_____
_____
_____

Signed: _____

Sketch:

Appendix D

Leachate Recirculation Plan

Operations Manual
Appendix D: Leachate Recirculation Plan

Johnston County Landfill Facility
Smithfield, North Carolina

Prepared for:

Johnston County Department of Public Utilities
Smithfield, NC

June 2007

RICHARDSON SMITH GARDNER & ASSOCIATES
Engineering and Geological Services
14 N. Boylan Avenue
Raleigh, North Carolina 27603

JOHNSTON COUNTY
JOHNSTON COUNTY LANDFILL FACILITY

OPERATIONS MANUAL
APPENDIX D: LEACHATE RECIRCULATION PLAN

1.0 OVERVIEW

Water is the most significant factor influencing waste stabilization and leachate quality. Moisture addition has been demonstrated repeatedly to have a stimulating effect on methanogenesis (Barlaz et al, 1990), although some researchers indicate that it is the movement of moisture through the waste as much as it is water addition that is important (Klink and Ham, 1982). Moisture within the landfill serves as a reactant in the hydrolysis reactions, transports nutrients and enzymes, dissolves metabolites, provides pH buffering, dilutes inhibitory compounds, exposes surface area to microbial attack, and controls microbial cell swelling (Noble, et al, 1991). Lu, et at, (1985) stated that high moisture flow rates can flush soluble organics and microbial cells out of the landfill and in such cases microbial activity plays a lesser role in determining leachate quality. Also, high moisture application rates can remove the majority of waste contaminants early in the life of the fill. Under low flow rate conditions, anaerobic microbial activity is the significant factor governing leachate organic strength (McBean et al, 1995). The quantity of moisture is important because it directly affects stabilization rates within the landfill. Sulfita et al, (1992) and Miller, et al, (1994) both noted the important role of moisture in supporting methanogenic fermentation of solid waste when examining samples removed from operating landfills. Relatively dry landfills (i.e. 20-40% water) have very slow stabilization rates because there is only a small quantity of moisture for biological degradation. Recommended moisture content reported in the literature ranges from a minimum of 25 percent (wet basis) to optimum levels of 40 to 70 percent (Barlaz, et al, 1990; Chen and Bowerman, 1974).

Leachate is recirculated in MSW landfills for one or more of the following reasons:

- as an alternative to leachate treatment,
- to promote biodegradation of the waste as detailed above to produce a smaller and more stable waste mass, and
- to accelerate the production of landfill gas (LFG).

Johnston County's plan to recirculate leachate within the Phase 5 area of their Subtitle D landfill is based on a desire to stabilize the waste and associated contaminants prior to placement of the final cover. The County facility is presently equipped with a leachate force main to a County owned and operated wastewater treatment plant (WWTP) so that disposal of leachate is not a concern. As such, this recirculation plan is developed with the goal of maximizing the rate of degradation of the waste and not for the purpose of leachate disposal.

2.0 REGULATORY REQUIREMENTS

The recirculation of leachate within lined MSW landfills is provided for in Federal RCRA Subtitle D regulations and not prohibited in North Carolina regulations. It is anticipated that design and operational requirements for recirculation will evolve from guidance provided by the Solid Waste Section of the North Carolina Division of Waste Management (DWM).

2.1 40 CFR 258 RCRA Subtitle D

Federal regulations provide both specific and implied requirements that must be met by landfills recirculating leachate. Relevant sections of the Federal regulations are as follows:

§258.28 (a): Bulk or non-containerized liquid waste may not be placed in the MSWLF units unless: (1) The waste is household waste other than septic waste; or (2) The waste is leachate or gas condensate from the MSWLF unit and the MSWLF unit, whether it is a new or existing MSWLF, or lateral expansion, is designed with a composite liner and leachate collection system as described in §258.40(a)(2) of this part...

§258.40(a)(2): With a composite liner, as defined in paragraph (b) of this section and a leachate collection system that is designed and constructed to maintain less than a 30-cm depth of leachate over the liner. (b) For purposes of this section, *composite liner* means a system consisting of two components: the upper component must consist of a minimum 30-mil flexible membrane liner (FML), and the lower component must consist of at least a two-foot layer of compacted soil with a hydraulic conductivity of no more than $1x10^{-7}$ cm/sec...

2.2 North Carolina Rule NCAC T15A: 13B.1600

North Carolina regulations mirror the above referenced Federal regulations in Rule .1624(b)(1) related to design and construction, Rule .1624(b)(2)(A) related to maximum head, and Rule .1626(9)(a)(ii) related to recirculation of leachate. Currently, however, implementation of leachate recirculation is administered using policy established in DWM guidance for leachate recirculation. This guidance establishes basic elements that must be incorporated into a leachate recirculation plan prior to implementation of a 120-day trial period and eventual long-term operation. Key elements of this guidance are listed on **Table 1** along with the location in this manual where the element is addressed.

3.0 FACILITY LIQUIDS CONTROL - ENGINEERED PERFORMANCE

Significant engineering effort has been expended to ensure that the maximum head acting on the liner system during routine recirculation does not exceed 30 cm and that the recirculation system itself does not adversely affect the integrity or stability of the landfill. This section provides a general description of these systems and the technical evaluation performed to ensure adequate performance.

3.1 Leachate Recirculation System

The leachate recirculation system uses a network of horizontal porous galleries to both inject leachate into the waste and to vent landfill gas (LFG) generated by the degradation of the waste. The galleries are designed to minimize leachate short circuiting of the waste and the potential for landfill fires in the LFG collection system. Each gallery consists of a family of parallel trench drains that are individually fitted with a leachate injection pipe. The **Project Drawings** show the general geometry and placement of the injection/LFG galleries and details for their construction. The galleries are placed at an approximate 30 foot vertical spacing and a maximum 80 foot horizontal spacing. Each successive vertical gallery is staggered to provide for more uniform leachate distribution and gas collection. The porous LFG collection and leachate distribution media can be constructed using gravel, tire chips, or other relatively inert media having a permeability greater than 1×10^{-2} cm/sec. The leachate injection and LFG collection pipes are high density polyethylene (HDPE) fusion welded pipe having a maximum SDR of 11. Leachate is injected under a minimum 10 psi pressure through a series of 1/8 inch holes spaced 10 feet apart. Field tests by GNRA have confirmed that this hole size and spacing allows for a very uniform release of leachate from each hole for pipe lengths up to 800 feet in length. For this project, lengths were designed up to $\pm$400 feet in length. Installation details for each injection/LFG gallery are recorded using the form provided in **Appendix D1**.

Significant settlement of the waste is anticipated during the service life of the recirculation system. HDPE was selected for use in the injection/LFG pipes due to both its chemical resistance and its low coefficient of friction which minimizes potential tensile forces caused by differential settlement of the waste. The selected SDR of the pipes is based on anticipated maximum tensile forces related to differential settlement and not the stresses generated by the leachate pressure.

3.2 Leachate Collection System (LCS)

The leachate collection system (LCS) for Phase 5 was modified by the County as follows. The modification consisted of removal of 12 inches of sand and a geotextile that had originally been placed between the primary leachate collection pipes and the waste. This material was replaced with a NC DOT #57 stone that provides a significant increase in the transmissivity of the pipe/stone drain and resistance to bioclogging of the drain. This conversion of the primary collection pipe system is performed just in advance of the placement of waste immediately on the #57 stone to ensure that the stone remains free of fines from the protective cover.

The HELP (v. 3.07) Model was used to evaluate the impact of leachate recirculation on the head acting on the composite liner system. This analysis indicates that the average head acting on the liner system is less than 12 inches when a minimum of 30 feet of waste is in place prior to initiating recirculation. The short-term HELP evaluations are conservative in that only a single 30 foot lift of waste is modeled for a 5 year period. As the height of waste is increased, the storage capacity within the waste increases and the

resulting head on the liner system decreases. For example, modeling a 60 foot layer of waste under intermediate cover reduces the short term head from 10.2 inches to 5.4 inches.

4.0 FACILITY EQUIPMENT AND OPERATING PRACTICES

Leachate recirculation must be performed in a manner that does not create odor or stability problems and produces heads on the liner system less than 30 cm. Odor problems are minimized in the proposed system by the use of leachate injection galleries such that raw leachate is not applied to the surface of the waste. The permanent system for injection of leachate is shown in the **Project Drawings** and requires operational steps as follows:

- Leachate to be recirculated is collected in the existing leachate pump station located adjacent to the existing leachate storage lagoon.

- Leachate is pumped from the pump station to the injection galleries using a submersible high-head pump capable of maintaining a minimum 10 psi pressure at the inlet of the injection gallery. Each injection gallery is provided with a positive on-off ball valve as shown in the **Project Drawings**.

- Leachate is pumped into individual injection galleries in metered ±6,000 gallon slugs designed to prevent localized saturation of the waste and stability problems. Injection is sequenced between the galleries and recorded using the form provided in **Appendix D1**.

- A backup system can be provided using a water truck that receives leachate from the leachate lagoon and then transports it back to the top of Phase 5 and injects it directly from the truck to one of the injection galleries. This system may be utilized in the event of a shutdown of the recirculation pump.

The general recirculation philosophy is to avoid visible discharge of leachate, e.g., spraying into the air by truck, sprinklers, or hoses, to minimize the potential for odor problems and excessive discharge in one zone of waste to minimize stability and seep related problems. This section discusses the facility hardware and operational procedures employed to successfully recirculate leachate to the waste.

4.1 Leachate Injection Gallery

Each injection gallery extends horizontally from the face of the final cover into the waste a distance of no more than about 400 (±10%) feet in length. Each injection gallery consists of a granular windrow or trench drain containing a HDPE leachate injection pipe. The details of this system are discussed in **Section 3.1**. Each leachate injection gallery pipe is fitted at its exposed end with a positive on-off valve connected to the supply line. A check valve and cleanout are also provided for each injection gallery pipe.

The injection pipe diameter and pressure are selected to ensure that leachate flow velocities are sufficient to prevent fouling of the injection pipe and the perforations. It is not anticipated that the leachate injection pipes will require servicing during their estimated 5-8 year service life. The granular drain surrounding the injection pipe is designed to both allow a more uniform distribution of the leachate and for the collection of LFG within the waste. The size and permeability of the granular trench drain is based on the desire to maintain internal LFG pressures less than 6-inches H_2O (0.22 psi). All injection gallery installation details will be recorded using the form provided in **Appendix D1**.

4.2 Leachate Injection Equipment

One submersible pump will be provided in the existing pump station for recirculating leachate. This pump is rated for a flow of 50 gpm at a head of 210 feet. This pump was selected to provide the required minimum inlet pressure to the leachate injection gallery of 10 psi and approximately 2 hours pumping time to inject 6,000 gallons of leachate. The injection pump is equipped with on-off controls within the pump station.

4.3 Leachate Amendment

With time it is anticipated that the leachate draining from Phase 5 will become increasingly acidic. Research by Barlaz (1990) has shown that the rate of waste decomposition actually decreases with increasing acidity. Therefore it may be necessary to buffer the leachate prior to future recirculation. This will be accomplished using a liquid lime injector as needed. Currently there are no plans for leachate amendment other than buffering.

5.0 FACILITY MONITORING PRACTICES

The facility must be monitored to ensure that the combination of leachate recirculation and natural precipitation does not produce excessive head on the liner system, side slope seeps, or stability problems. This section reviews a monitoring system to be installed at Phase 5 to monitor both weather and leachate quantities.

5.1 Weather Monitoring

Daily weather monitoring will be obtained using a rain gauge and tell-tale equipped thermometer located at the landfill office. Daily readings would be obtained for the maximum temperature, total rainfall, and general weather conditions. This information would be recorded on the form provided in **Appendix D1**. This data allows an accurate evaluation of the water-balance over time within the waste.

5.2 Leachate Monitoring

Leachate from Phase 5 gravity drains to the leachate lagoon. The cumulative flow through the gravity drain line will be monitored via flowmeters for all pumps. Calculations commonly performed to determine action leakage rates (ALR) for leak detection systems show that the flow rate will be 130,600 gallons per day when the maximum head acting on the liner is 30 cm. The cumulative flow monitoring will provide verification that the head acting on the liner system is less than 30 cm.

Landfill personnel will pay particular attention to sudden increases in leachate generation during or immediately after recirculation activities. Sudden increases in rate of leachate generation from the facility not accompanied by precipitation indicates that injected leachate is moving through the waste faster than normal. This may imply either saturation of the waste due to over injection of leachate or short circuiting (via voids in the waste) of the waste by a single injection. Both situations require a cessation of injection to the injection gallery in question and a modification of the injection sequence.

6.0 REPORTS

The following reports will be prepared:

- Pre-Operational Report;
- 120-Day Trial Period Reporting (Progress and Final Reports); and
- Quarterly Operational Reports.

Reporting forms proposed in this pre-operational report will be revised with experience.

6.1 Pre-Operational Report

The pre-operational report provides sufficient information to justify the 120-day trial recirculation period. This Leachate Recirculation Plan is the pre-operational report for the Johnston County Phase 5 leachate recirculation program.

6.1.1 Weather Monitoring

A daily rain gauge and thermometer will be installed at the landfill office to allow daily recording of total rainfall and maximum temperature. This data will be recorded at the end of each working day.

6.1.2 Baseline Leachate Sampling

Baseline leachate quality data for Phase 5 will be provided within the last 30 days prior to the initiation of leachate recirculation. This data will include test results

for BOD, COD, temperature, conductivity, pH, ammonia, suspended solids, metals, and volatiles.

6.1.3 Operational Procedures

Johnston County plans on proceeding with the installation of the recirculation pump and force main. Thus, the operational procedures during the 120-day trial recirculation period will be the same as for long-term operations as previously described in **Section 4**.

6.1.4 Operational Equipment

The operational equipment during the 120-day trial will include the recirculation pump and force main and a portion of the first level of injection galleries as shown in the **Project Drawings** and installed at a nominal elevation of 30 feet of waste.

6.1.5 Record Keeping

Daily readings for rainfall, maximum temperature, quantity of leachate generated/recirculated, and leachate injection galleries used will be maintained using the form provided in **Appendix D1**. This form provides for a week of data and allows comments on the daily weather conditions and unusual operating conditions, e.g., odor or seeps. These data sheets will be provided to the State as part of the technical report submitted to DWM in support of implementation of the long-term leachate recirculation program.

6.2 120-Day Trial Period Reporting

6.2.1 Progress Report

After a minimum of 60 days, a progress report will be prepared which describes and documents the monitoring activities since initiation of the 120-day trial period, presents observed difficulties and/or operational modifications, and presents leachate quality data. Leachate quality data will include test results for BOD, COD, temperature, conductivity, pH, ammonia, suspended solids, metals, and volatiles.

6.2.2 Final Report

At the completion of the 120-day trial period, a final report will be prepared which describes and documents the monitoring activities for the entire trial period, presents observed difficulties and/or operational modifications, and presents leachate quality data. Leachate quality data will include test results for BOD, COD, temperature, conductivity, pH, ammonia, suspended solids, metals, and volatiles. The most critical aspect of this report is confirmation that the

proposed leachate injection sequence results in acceptable performance. Final drawings and specifications for the facility modifications will also be submitted with this report. Based on this report, Johnston County will request approval by DWM to implement the long-term leachate recirculation program.

6.3 Quarterly Operational Reports

Quarterly leachate recirculation operational reports will be submitted to DWM after the 120-day trial period. These reports will provide the daily log sheets provided in **Appendix D1**, identify all leachate injection galleries in service, and provide updated leachate quality data.

7.0 REFERENCES

1- Barlaz, M.A., R.K. Ham, and D.M. Schaefer, 1990. "Methane Production from Municipal Refuse: A review of Enhancement Techniques and Microbial Dynamics," Critical Reviews in Environmental Control, 19(6): 557.

2- Chen, K.Y. and F.R. Bowerman, 1974. "Mechanisms of Leachate Formation in Sanitary Landfills," in: Recycling and Disposal of Solid Wastes: Industrial, Agricultural, Domestic., Yen, T.F. editor, Ann Arbor, Ann Arbor Science Publication.

3- Klink, R.E. and R.K. Ham, 1982. "Effect of Moisture Movement on Methane Production in Solid Waste Landfill Samples," Resources and Conservation, 8: 29.

4- Lu, J.C.S., et al., editor, 1985. Leachate from Municipal Landfills, Production and Management, Noyes Publisher, Park Ridge, New Jersey.

5- McBean, E.A., F.A. Rovers, and G.J. Farquhar, 1995. Solid Waste Landfill Engineering and Design, Prentice Hall, Englewood Cliffs, NJ.

6- Miller, W.L., T. Townsend, J. Earle, H. Lee, and D.R. Reinhart, 1994. "Leachate Recycle and the Augmentation of Biological Decomposition at Municipal Solid Waste Landfills," Presented at the Second Annual Research Symposium, Florida center for Solid and Hazardous Waste Management, Florida.

7- Noble, J.J. and A.E. Arnold, 1991. "Experimental and Mathematical Modeling of Moisture Transport in Landfills," Chemical Eng. Comm., 100: 95-111.

8- Sulfita, J., C. Gerba, R. Ham, A. Palmisano, W. Rathje, and J. Robinson, 1992. "The World's Largest Landfill," Environmental Science & Technology, 26(8): 1486-1495.

TABLE 1: NC DWM POLICY ELEMENTS FOR LEACHATE RECIRCULATION

Conditions	Policy Element	Section(s)
Preoperative Conditions	A rain gauge and thermometer shall be placed on the site.	6.1.1
	A Baseline sampling of leachate shall be performed.	6.1.2
	An outline of expected operational procedures shall be submitted.	4.0
	A brief description of the equipment and its' associated specifications shall be submitted.	4.0 & Specs.
	A brief description of record-keeping forms shall be submitted including: ● daily/weekly record of leachate generated ● daily/weekly record of leachate recirculated ● weather conditions and other pertinent daily information ● a log for reporting operating or other unusual problems, and their subsequent rectification ● any other forms or procedures, etc., that the owner/operator will use.	5.0/6.0
	An estimation of height of waste in the cell where leachate is anticipated to be applied.	Project Drawings
	An analysis of the field capacity of the waste where leachate is to be applied, such that the gallons per unit area does not exceed the field capacity of the waste volume.	3.2
Operating Conditions	Records shall be kept or a daily/weekly basis as outlined.	6.0
	No leachate shall be applied on less than one lift (10 feet) of waste.	3.1
	No leachate shall be spray applied or surface circulated when it is raining, or when the waste is too wet.	4.0
	No run-off or side seepage will be allowed.	4.0
	Odors will be controlled.	4.0
	Leachate depth shall be monitored in the manhole to ensure that the head on the liner does not exceed one foot for more than 24 hours.	5.2
	Leachate will be spray applied or surface circulated during daylight hours only.	N/A
	The application system will be properly maintained and documented.	5.0/6.0
	Subsurface distribution systems will be outlined.	4.1
	Operation and maintenance of subsurface systems will be proposed.	4.0

Appendix D1

Reporting Forms and Logs

JOHNSTON COUNTY MSW LANDFILL - PHASE 5
LEACHATE RECIRCULATION
120-DAY TRIAL PERIOD MONTHLY REPORTING FORM

Start Date (Day 1): _____

Day	Rain (Inch)	Max. Temp.	Leachate Generated	Leachate Recirculated	Injection Galleries Used	Problems/Weather (Use Extra Sheet if Required)
1						
2						
3						
4						
5						
6						
7						
8						
9						
10						
11						
12						
13						
14						
15						
16						
17						
18						
19						
20						
21						
22						
23						
24						
25						
26						
27						
28						
29						
30						
31						

JOHNSTON COUNTY MSW LANDFILL - PHASE 5
LEACHATE RECIRCULATION
LEACHATE RECIRCULATION MONTHLY REPORTING FORM

Start Date (Day 1): _____

Day	Rain (Inch)	Max. Temp.	Leachate Generated	Leachate Recirculated	Injection Galleries Used	Problems/Weather (Use Extra Sheet if Required)
1						
2						
3						
4						
5						
6						
7						
8						
9						
10						
11						
12						
13						
14						
15						
16						
17						
18						
19						
20						
21						
22						
23						
24						
25						
26						
27						
28						
29						
30						
31						

JOHNSTON COUNTY MSW LANDFILL - PHASE 5
LEACHATE RECIRCULATION
LEACHATE RECIRCULATION DAILY LOG

Date: _____

Time	Injection Gallery	Volume Pumped	Remarks

JOHNSTON COUNTY MSW LANDFILL - PHASE 5
LEACHATE RECIRCULATION
HORIZONTAL WELL INSTALLATION LOG

Well Number: _____

Date(s) Installed: _____

Length Installed: _____

Elevation: _____

Number of Holes/Spacing: _____

Hole Size: _____

Coordinates:

Point #: _____ X: _____ Y: _____ Z: _____

Point #: _____ X: _____ Y: _____ Z: _____

Point #: _____ X: _____ Y: _____ Z: _____

Remarks: _____
_____
_____
_____
_____
_____
_____

Installation Sketch:

Appendix E

Irrigation of Reclaimed Wastewater

Operations Manual
Appendix E: Irrigation of Reclaimed Wastewater

Johnston County Landfill Facility
Smithfield, North Carolina

Prepared for:

Johnston County Department of Public Utilities
Smithfield, NC

June 2007
Revised: December 2008

RICHARDSON SMITH GARDNER & ASSOCIATES
Engineering and Geological Services
14 N. Boylan Avenue
Raleigh, North Carolina 27603

JOHNSTON COUNTY
JOHNSTON COUNTY LANDFILL FACILITY

OPERATIONS MANUAL
APPENDIX E: IRRIGATION OF RECLAIMED WASTEWATER

TABLE OF CONTENTS

Page

1.0 Overview 1
2.0 Contact Information 1
3.0 Irrigation System Operation 1
3.1 Areas to be Irrigated 1
3.2 Periods of Operation 2
3.3 Irrigation Amounts 2
3.4 Irrigation Restrictions 2
3.4.1 Monitoring Wells 2
3.4.2 Closed Landfill Areas 3
3.4.3 Future Landfill Areas 3
3.4.4 Borrow Areas 3
3.5 Site Monitoring of Irrigation Program 3
3.6 System Maintenance and Inspections 4

FIGURES

Figure 1 Landfill Site Irrigation Plan

JOHNSTON COUNTY
JOHNSTON COUNTY LANDFILL FACILITY

OPERATIONS MANUAL
APPENDIX E: IRRIGATION OF RECLAIMED WASTEWATER

1.0 OVERVIEW

This Operations Manual Addendum was prepared for the Johnston County MSW Landfill located off of Highway 210 on County Home Road for the purpose of describing the operation of an irrigation system for reclaimed wastewater. The system is owned and operated by Johnston County.

2.0 CONTACT INFORMATION

All correspondence and questions concerning the operation of the reclaimed wastewater irrigation system should be directed to the appropriate County personnel listed below:

Johnston County Department of Public Utilities
309 E. Market Street, P.O. Box 2263
Smithfield, NC 27577
Phone: (919) 209-8333 (Downtown); (919) 938-4750 (Landfill)
Fax: (919) 934-7174 (Downtown); (919) 989-7152 (Landfill)

Solid Waste Manager:	Rick Proctor
Public Utilities Director:	Tim Broome, P.E.

3.0 IRRIGATION SYSTEM OPERATION

3.1 Areas to be Irrigated

Areas to be irrigated and order of priority (1 being the highest) include the following:

<u>Priority 1:</u>

- Wooded area behind (south and east of) NC Forest Service building (Field 1) (Not on Solid Waste Permit Site);
- Agricultural fields to the south and west of the landfill office (Field 2) (majority not on Solid Waste Permit Site);
- Area behind (west of) landfill office (Fields 3 & 4 - future Phases 6, 9, and 10); and
- Wooded area south of the leachate storage lagoon (Fields 6, 7, & 8 - future Phases 7 and 8).

Priority 2:

- Closed landfill areas on Phase 1 & 2, 3, 4, and 5 (LF Cap 1 & 2, LF Cap 3, LF Cap 4, and LF Cap 5).

Priority 3:

- Inactive borrow areas (Field 5 - future Phases 6 and 7) (Fields 9, 10, & 11).

In addition to these areas, the County plans to use reclaimed wastewater for the control of dust within the facility and around the County livestock arena (not on Solid Waste Permit Site). **Figure 1** presents the location of the various planned irrigation areas.

3.2 Periods of Operation

The irrigation system will be operated during the months of April through October with the exception of Fields 1, 2, and 3. In addition, irrigation will be discontinued on any day that rainfall exceeds 0.2 inches.

For Fields 1, 2, and 3, irrigation will be year-round. A winter cover crop, such as annual rye, will be used as required. No irrigation will take place during freezing temperatures. Equipment will be drained as required to prevent problems due to freezing temperatures.

3.3 Irrigation Amounts

Irrigation amounts off the landfills will be in accordance with the agronomic rates determined for the landfill site (based on "wettest" year amounts) in an analysis performed by Robert Evans, Ph.D., P.E. of N.C. State University and entitled "Hydrologic Wastewater Reuse Irrigation Analysis for Johnston County". Irrigation amounts on the landfill final covers will be in accordance with HELP model evaluations performed by Richardson Smith Gardner & Associates, Inc. (formerly G.N. Richardson & Associates, Inc.). A tabulation of amounts to be irrigated is given in **Table 1**. Restrictions to these amounts are as stated herein. Note that based on site monitoring of the irrigation program (see **Section 3.5**), future increases to these amounts may be allowed.

3.4 Irrigation Restrictions

3.4.1 Monitoring Wells

No irrigation will occur within 100 feet of an actively monitored site monitoring well.

3.4.2 Closed Landfill Areas

Irrigation over closed landfill areas shall only take place over closed areas which have at least 2 feet of soil cover or at least 1.5 feet of soil cover and a synthetic barrier.

3.4.3 Future Landfill Areas

Irrigation over areas designated as future landfill areas (or areas within 300 feet of future landfill areas) will be discontinued within 2 years before the anticipated start of construction for that area unless it is demonstrated by use of piezometers, monitoring wells, or other method (see **Section 3.5**) that irrigation rates are not creating an artificial rise in groundwater levels. Closed landfill areas, if to be lined over as part of a future landfill area may be irrigated in accordance with **Section 3.4.2**.

3.4.4 Borrow Areas

No irrigation will be performed in active borrow areas. Irrigation may be performed in inactive borrow areas as long as the ground surface is prepared to promote vegetation (soil type, nutrients, etc.).

3.5 Site Monitoring of Irrigation Program

In order to monitor the effect of the irrigation program both to ground water quality and to the ground water table a monitoring program will be implemented. This program will consist of two elements. One will be the addition of sampling and testing of the treated irrigation water as part of the regular Spring and Fall ground water sampling/testing events already performed as part of site operations. After sampling, the irrigation water will be tested for the same detection monitoring parameters as for the other site samples.

In addition, the second element of the monitoring program will be the installation of piezometers in each future landfill area to be irrigated (i.e. Phases 6-10). At a minimum, one piezometer will be installed roughly in the central portion of the proposed future landfill phase before irrigation can begin over that area. The water elevations in these piezometers will be measured and recorded both during the spring and fall, concurrent with regular site ground water monitoring, and in the mid-summer. These levels will be evaluated in order to determine if there appears to be a rise in ground water elevations due to the irrigation activities. Should ground water elevations be maintained within a couple of feet of initial levels or levels that might otherwise be considered normal considering other factors such as weather, etc., the irrigation amounts for that area may be increased. Likewise, if there appears to be a significant (more than a couple of feet) increase in ground water elevation, which cannot be otherwise explained, irrigation activities in this area will be reduced or suspended. Also, as stated in **Section 3.4.3**, irrigation in future landfill areas will be halted at least two years prior to planned construction activities in that area.

3.6 System Maintenance and Inspections

Inspection of the irrigation system during periods of operation will be performed by landfill staff on a weekly basis for the closed landfill areas. Other areas may be inspected less frequently, but not less than once per month. As much of the proposed system will be above ground, inspection for damaged piping, valves, sprinklers, etc. will be done on a mostly visual basis. Should maintenance be required to any portion of the irrigation system, that part of the system will be shut off until adequate repairs are made.

Table 1: Irrigation Amounts

Field	Max. Daily Application Rate cm/day (inch/day)	Annual Application Rate cm/year (inch/year)
Fields 1 and 2	0.60 (0.25)	70 (28)
Fields 3, 4, and 5	0.60 (0.25)	62 (25)
Fields 6, 7, and 8	0.60 (0.25)	42 (17)
Fields 9 and 10 Livestock Arena	0.60 (0.25)	50 (20)
Dust Control	0.60 (0.25)	45 (18)
Field 11	0.60 (0.25)	40 (16)
Landfill Final Cover[1]	0.25 (0.1)	12 (5)

Note:

1) At a rate less than that which would cause saturation of the upper 9 inches of soil cover. This will be controlled by the use of soil moisture devices, which will automatically shut off the irrigation system if the upper 9 inches becomes saturated.

DATE	NO.	REVISION
11/08	5	RESPONSE TO NCDENR COMMENTS AND ADDITIONAL CHANGES
6/07	4	GENERAL UPDATES
2/06	3	REMOVED SIDE SLOPE LFG CAP 3 (PHASE 3)
8/05	2	GENERAL MAP UPDATES
3/04	1	ADDED FIELD 11 AND LF CAP 5

LEGEND

- LF CAP – TOP WITH SYNTHETIC BARRIER
- LF CAP – TOP WITHOUT SYNTHETIC BARRIER – SIDE SLOPE
- IRRIGATION AREA OUTSIDE OF FUTURE LANDFILL AREAS
- IRRIGATION WITHIN FUTURE LANDFILL AREAS (PIEZOMETER REQUIREMENT)
- HAUL ROAD IRRIGATION (DUST CONTROL)
- POTENTIAL WETLANDS
- RIPARIAN BUFFER

REFERENCES

1. OVERALL SITE TOPOGRAPHY PROVIDED BY GEODATA CORPORATION, BASED ON MAY 21, 2004 AERIAL PHOTOGRAPHY. TOPOGRAPHY IN ACTIVE AREAS BASED ON JUNE 6, 2008 AERIAL PHOTOGRAPHY. TOPOGRAPHY OF PHASE 4 CELL 2 PROVIDED BY 4D SITE SOLUTIONS INC., DATED JUNE 2, 2005. TOPOGRAPHY IN PHASE 5 AREA PROVIDED BY SOUTHWIND SURVEYING AND ENGINEERING, GARNER, NC, DATED JUNE 16, 2003.

0 300' 600' 900'

RICHARDSON SMITH GARDNER & ASSOCIATES
Engineering and Geological Services
14 N. Boylan Ave. Raleigh, N.C. 27603
www.rsgengineers.com
ph: 919-828-0577
fax: 919-828-3899

SEAL

SEAL

PROJECT TITLE:
JOHNSTON COUNTY LANDFILL
IRRIGATION OF RECLAIMED WASTEWATER

DRAWING TITLE:
LANDFILL SITE
IRRIGATION PLAN

DESIGNED BY: P.K.S.	DRAWN BY: J.A.L.
CHECKED BY:	PROJECT NO.: JOHN 07-2
SCALE: AS SHOWN	DATE: OCT. 2001
FILE NAME: JOHN-D0212E	
SHEET NO.	DRAWING NO. FIG. 1

G:\CADD\Johnston\John 07-2\rev 10210\Sheets\JOHN-D0212E.dwg - 12/8/2008 10:06 AM

Attachment D

Closure and Post-Closure Plan

Permit Amendment Application
Johnston County C&D Landfill – Area 2 (Permit No. 51-03)

Closure and Post-Closure Plan

Johnston County Landfill
Smithfield, North Carolina

Prepared for:

Johnston County Department of Public Utilities
Smithfield, NC

December 2011

RICHARDSON SMITH GARDNER
& ASSOCIATES
ENGINEERING & GEOLOGICAL
SERVICES

14 N. BOYLAN AVENUE
RALEIGH, NORTH CAROLINA 27603
NC LIC. NO. C-0828 (ENGINEERING)

JOHNSTON COUNTY LANDFILL

CLOSURE AND POST-CLOSURE PLAN

TABLE OF CONTENTS

Page

1.0 CLOSURE PLAN

1.1 Overview 1.0-1
1.2 Maximum Closure Area and Waste Capacity 1.0-1
1.3 Final Cover System 1.0-2
1.4 Landfill Gas System 1.0-2
1.5 Surface Water Systems 1.0-2
1.5.1 Incremental Operation 1.0-3
1.5.2 Required Maintenance 1.0-3
1.6 Closure Schedule 1.0-3
1.7 Closure Verification 1.0-4

2.0 POST-CLOSURE PLAN

2.1 Overview 2.0-1
2.2 Post-Closure Contact 2.0-1
2.3 Post-Closure Use 2.0-1
2.4 Maintenance 2.0-2
2.4.1 Repair of Security Control Devices 2.0-2
2.4.2 Erosion Damage Repair 2.0-2
2.4.3 Correction of Settlement, Subsidence, and Displacement 2.0-2
2.4.4 Leachate Management System (Lined Units) 2.0-2
2.4.5 Closure of Leachate Storage Lagoon 2.0-2
2.4.6 Repair of Run-On/Run-Off Control Structures 2.0-3
2.4.7 Landfill Gas System 2.0-3
2.4.8 Groundwater Monitoring Wells 2.0-4
2.5 Monitoring Plan 2.0-4
2.5.1 Inspection Frequencies 2.0-4
2.5.2 Quarterly Inspections 2.0-4
2.5.3 Semi-Annual Inspections 2.0-4
2.6 Engineering Certification 2.0-5

3.0 CLOSURE/POST-CLOSURE COST ANALYSIS

3.1 Overview 3.0-1
3.2 Estimated Closure Costs 3.0-1
3.3 Estimated Post-Closure Costs 3.0-1
3.4 Estimated Assessment and Corrective Action Costs 3.0-1
3.5 Financial Assurance Mechanism 3.0-1

SECTION 1.0
CLOSURE PLAN

1.1 OVERVIEW

This plan is intended to serve as a guide for the proposed closure. A formalized Closure Plan for each landfill unit (or incremental portion thereof) will be submitted to the Solid Waste Section of the North Carolina Department of Environment and Natural Resources Division of Waste Management (DWM) for approval prior to beginning closure construction.

1.2 MAXIMUM CLOSURE AREA AND WASTE CAPACITY

The following are the estimated areas and capacity for each landfill unit to be closed under this plan.

Landfill Unit	Closure Area (Acres)	Gross Capacity (CY)[1]	Net (Waste) Capacity (CY/Tons)[1]
MSW Landfill Units			
Phase 4A (Through Cell 3 - Fill Sequence 1)	29.4	2,531,948	2,152,156 CY 1,383,316 Tons
Phase 5	19.2	1,087,199	884,625 CY 514,181 Tons
Total (MSW):	48.6	3,619,147	3,036,781 CY 1,897,497 Tons
C&D Units			
Area 1 (See Note 3)	12.9 (See Note 2)	614,472	515,563 CY 304,780 Tons
Area 2 (Cell 1)	11.9	410,675	353,056 CY 212,920 Tons
Total (C&D):	24.8	1,027,345	868,619 CY 517,700 Tons

Notes:

1. The volume and tonnage figures assumed for each landfill unit are based on the site's Facility Plan. Refer to Section 2.0 (Facility Report) of the Facility and Engineering Plan (**Attachment A**).

2. The Area 1 C&D landfill unit has a total area of 16.2 acres but has a reduced closure area due to the overlying Phase 4A - Cell 3 MSW landfill unit.

3. The Area 1 C&D landfill unit is currently closed and is awaiting approval of the closure certification.

1.3 FINAL COVER SYSTEM

The final cover system will consist of the following components (top-down):

- a 24-inch thick vegetative soil layer (including 6 inches of topsoil);
- a drainage geocomposite (with drainage breaks)
- a 30-mil textured LLDPE geomembrane; and
- a 12-inch thick intermediate cover layer.

The final cover system will be placed on prepared intermediate cover at a maximum slope of 4H:1V. Surface water control devices will also be incorporated into the final cover of each landfill unit and some units will have a landfill gas (LFG) control system. The final cover surface will be vegetated upon completion of the final cover installation according to the project seeding specifications.

Placement of the vegetative soil layer over the cover geosynthetics must be done with care to avoid damage to these materials. This soil layer should be placed from the bottom up using a small dozer equipped with low ground contact pressure (6 psi or less) tracks. A minimum of 12 inches of soil should be maintained between the dozer tracks and the underlying geosynthetics. The soil buffer should receive no compaction other than that provided by the dozer tracks. Pans or other heavy equipment should not operate on the vegetative soil layer.

Refer to the appropriate permit application for a detailed discussion and details related to the design of the final cover system for each landfill unit.

1.4 LANDFILL GAS SYSTEM

For the MSW landfill units and C&D landfill units overlying MSW units, a landfill gas system is provided in the final cover design. This system includes a system of collection wells placed within the waste to capture the gas and either passively vent or flare the gas via utility flares or, as required, actively collect and flare the gas via header piping and a blower/flare system. The collection wells should be placed before any geosynthetics are placed.

Refer to the appropriate permit application for a detailed discussion and details related to the design of the landfill gas system for each landfill unit.

1.5 SURFACE WATER SYSTEMS

Precipitation falling on the cover will infiltrate into the cover or run off the cover. Short-term the run-off runs down the surface of the intermediate cover. Long-term the run-off is collected in a series of drainage breaks built into the areas covered by final cover. These drainage breaks are provided along side slopes (rain gutters and diversion berms). Water captured by rain gutters or diversion berms is routed toward one of the down pipes. Flow in the down pipes is routed to the base of the landfill and to one of the site sediment basins.

Refer to the appropriate permit application for a detailed discussion and details related to the

design of surface water systems for each landfill unit.

1.5.1 Incremental Operation

During much of the life of the landfill, surface run-off will be handled by the intermediate cover system. Operations must strive to provide operational grading that encourages run-off from the intermediate cover to drain to the perimeter channels along the perimeter berms or to areas covered by final cover. Corrugated polyethylene (CPE) piping and temporary soil berms must be installed if required to accomplish this run-off routing.

1.5.2 Required Maintenance

The surface water systems must be inspected annually and immediately after every major storm. Sediment build-up in the drainage features/devices must be cleaned out on a regular basis to promote run-off. Sediments removed can be used as daily or intermediate cover.

1.6 CLOSURE SCHEDULE

In general, closure activities will occur on the following schedule:

MSW Landfill Units (15A NCAC 13B.1627(c)(5)):

- No later that 30 days after the date on which the MSWLF unit receives the known final receipt of wastes; or
- If the MSWLF unit has remaining capacity and there is a reasonable likelihood that the MSWLF unit will receive additional wastes, no later than one year after the most recent receipt of wastes.

C&D Landfill Units (15A NCAC 13B.0543(c)(5)):

- No later that 30 days after the date on which the C&DLF unit receives the known final receipt of wastes;
- No later than 30 days after the date that a 10 acre or greater area of waste, is within in 15 feet of final design grades; or
- No later than one year after the most recent receipt of wastes, if the C&DLF unit has remaining capacity.

Prior to beginning closure of any landfill unit, the County will notify the DWM that a notice of the intent to close the unit has been placed in the operating record.

All closure activities shall be completed within 180 days. Exemptions and extensions may be approved by the DWM.

1.7 CLOSURE VERIFICATION

The following procedures will be implemented following closure:

- A Construction Quality Assurance (CQA) report will be submitted to the DWM. This report will describe the observations and tests used before, during, and upon completion of construction to ensure that the construction materials meet the final cover design specifications and the construction and certification requirements. The CQA report will contain as-built drawings.

- A signed certification from a registered Professional Engineer verifying that closure has been completed in accordance with the closure plan will be submitted to the DWM.

- At least one sign notifying all persons of the closing of the landfill (or incremental portions thereof) and that wastes are no longer accepted will be posted. Suitable barriers will be installed as necessary at former access points to prevent new waste from being deposited.

- Within 90 days, a survey plat, prepared by a registered Professional Land Surveyor, indicating the location and dimensions of landfill disposal areas, will be prepared.

- A notation will be recorded on the deed notifying any potential purchaser of the property that the land has been used as a landfill facility and that future use is restricted under the approved closure plan. A copy of the deed notation as recorded will be filed with the operating record.

SECTION 2.0
POST-CLOSURE PLAN

2.1 OVERVIEW

This Post-Closure Plan has been developed to outline steps to be taken to ensure the integrity of the landfill during its post-closure care period. The post-closure care period will last at least 30 years after final closure and, at a minimum, will consist of the following:

- Maintaining the integrity and effectiveness of final cover system;
- Performing groundwater and surface water monitoring;
- Maintaining and operating a gas monitoring system; and
- Maintaining run-on/run-off controls.

No wastes will remain exposed after closure of the landfill. Access to the closed site by the public will not pose a health hazard.

2.2 POST-CLOSURE CONTACT

All correspondence and questions concerning the post-closure care of the unit should be directed to:

Johnston County Department of Public Utilities
Attn: Director
309 E. Market Street
Smithfield, NC 27577
Phone: (919) 209-8333
Fax: (919) 934-7174.

2.3 POST-CLOSURE USE

After filling operations cease at the landfill and the landfill is officially closed in accordance with the Closure Plan, each landfill unit will be maintained as a grassy hill. Johnston County will maintain control of the property and prevent public access to it during the post-closure period.

There may be (an) access road(s) on the final cover to allow proper maintenance during post-closure. Precise location of the access road(s) will be determined as a part of operations. Low ground pressure and rubber tire vehicles will be used for maintenance. Additionally, the County will maintain access to all site monitoring locations throughout the post-closure period.

2.4 MAINTENANCE

2.4.1 Repair of Security Control Devices

All security control devices will be inspected and maintained as necessary to ensure access to the site is controlled. Locks, vehicular gates, and fencing will be replaced if functioning improperly. Warning signs will be kept legible at all times and will be replaced if damaged by inclement weather or vandalism.

2.4.2 Erosion Damage Repair

If erosion of the final cover occurs during post-closure, the affected area will be repaired and reseeded as necessary. If necessary, rolled erosion control products (RECPs) will be used to expedite rapid revegetation of slopes and to secure topsoil in place.

2.4.3 Correction of Settlement, Subsidence, and Displacement

Minimum slopes of 5 percent will be maintained after settlement in order to prevent ponding and allow for proper drainage without infiltration. If vertical or horizontal displacement occurs due to differential settlement, cracks will be filled with appropriate material and final cover will be reestablished. Excessive vertical displacement is not anticipated.

2.4.4 Leachate Management System (Lined Units)

In order to maintain the free flow in leachate collection piping, they will be cleared of debris using the manholes or cleanout locations for access. If pipes should crush or buckle within the landfill, leachate will flow through the gravel columns. The leachate collection system (LCS) includes a continuous blanket drain on the base of the landfill which will allow drainage of leachate even in the very unlikely event of total failure of the leachate collection pipes.

2.4.5 Closure of Leachate Storage Lagoon

After closure of the lined landfill units has been achieved, the generation of leachate will eventually curtail. The flow rate immediately after closure should decrease to approximately 100 gallons/acre/day. Toward the end of the 30-year post-closure period, the flow should approach zero, at which time the storage lagoon will not be required. The following procedures will be followed to properly close the leachate storage lagoon:

- Completely drain and remove all liquids, sludges, sediments, etc. from the storage lagoon.

- Disassemble the lagoon, piping, and appurtenances and dispose of the contents in a manner approved by the DWM.
- Sample and analyze the underlying soil for appropriate constituents

inherent to leachate. Assess the results for evidence of contaminant migration.

- If contamination of underlying soils is exhibited, perform an assessment as to the degree of contamination and develop remedial actions.

- Obtain approval of the DWM for the assessment and associated remedial measures.

- Perform the remedial actions as necessary to limit any threats to public health and the environment.

- Restore the area to closely match pre-existing conditions in the vicinity of the containment areas. Activities may include: filling, grading, topsoiling, and seeding.

2.4.6 Repair of Run-On/Run-Off Control Structures

All drainage swales, ditches, and perimeter channels will be repaired, cleaned, or realigned in order to maintain their original condition. Any culverts that are damaged will be repaired or replaced.

2.4.7 Landfill Gas System

The landfill gas (LFG) system will be maintained by the County and operated in accordance with any site air quality permits. Proper operation of the system is verified through testing at the landfill gas monitoring wells.

If gas wells/vents do not function as a result of irregular settlement, accumulation of liquids (condensate, leachate, water), binding or corrosion, additional and/or replacement wells/vents can be installed if necessary in accordance with the current LFG Management Plan.

At the point that LFG recovery drops below the minimum rates necessary for operation of an active gas collection and control system, the active system will be decommissioned and the wells will be converted to passive vents or capped as appropriate. Decommissioning of the active system will consist of the removal of the LFG flare, blower and equipment skids, fencing, and related electrical components. Piping and structures which have been in contact with LFG condensate will be removed and disposed of in a manner approved by the DWM. LFG piping and structures within the limits of the landfill units will be abandoned in-place if possible in a manner approved by the DWM to minimize the potential for damage to the final cover system of each unit. Once decommissioning activities are complete, the area(s) will be restored (grading as required and revegetation).

Any damage caused to the landfill liner or final cover systems as the result of

maintenance, repair, or decommissioning of the LFG system will be repaired following the appropriate specifications and construction quality assurance (CQA) requirements.

2.4.8 Groundwater Monitoring Wells

Procedures outlined in the current Water Quality Monitoring (WQM) Plan or subsequent revision will take precedence; however, a brief description follows. All groundwater monitoring wells have been installed with concrete pads and protective casings to prevent accidental damage by vehicles and equipment. The wells are also equipped with a locking cap to discourage vandalism. Groundwater wells will be inspected regularly (at the time of sampling) to ensure integrity. Persons inspecting a well should look at the overall condition of the well, for signs of well tampering, and cracking or degradation of the concrete pad. Should a well require replacement, the defective well should be abandoned in accordance with specifications provided in the WQM Plan and a new well installed at a location that is approved by the DWM.

2.5 MONITORING PLAN

The closed unit will be monitored for a minimum of 30 years. A series of inspections will be scheduled to ensure the integrity and effectiveness of the final cover system, surface water systems, groundwater monitoring system, landfill gas system, and to protect human health and the environment.

2.5.1 Inspection Frequencies

Inspections to be conducted during the post-closure care period will occur regularly as shown in **Table 2.1**.

2.5.2 Quarterly Inspections

Quarterly inspections of the closed site will be conducted by the County. These inspections will include examination of the security control devices for signs of deterioration or vandalism to ensure access to the site is limited to authorized persons. Each disposal area will be checked to ensure the integrity of the final cover system is maintained, erosion damage is repaired, vegetative cover persists, and that cover settlement, subsidence, and displacement are minimal. Drainage swales and channels will be cleared of litter and debris and benchmark integrity will be noted and maintained.

2.5.3 Semi-Annual Inspections

Semi-annual inspections of the site during the post-closure period will be conducted by the County with attention paid to integrity and drainage of the final cover system and condition of the groundwater and gas monitoring systems.

A report of findings will be made to the responsible party, including recommendations for actions deemed necessary to ensure the site continues to meet the closure performance

standard.

2.6 ENGINEERING CERTIFICATION

Based on the County's monitoring reports, annual certifications by a registered engineer will be placed in the operating record. They will certify that the closure plan has been followed, noting discrepancies along with the corrective actions undertaken. At the end of the post closure period, the individual certifications will be compiled into a final document and forwarded to the DWM.

TABLE 2.1: POST-CLOSURE INSPECTION FREQUENCIES

INSPECTION ACTIVITY	YEAR 1	YEARS 2-30
Security Control Devices	Quarterly	Quarterly
Vegetative Cover Condition	Quarterly[1]	Quarterly
Surface Water Systems	Quarterly[1]	Quarterly
Erosion Damage	Quarterly[1]	Quarterly
Cover Drainage System	Quarterly[1]	Semi-Annually
Cover Settlement, Subsidence, and Displacement	Quarterly[1]	Semi-Annually
Leachate Management System	Quarterly	Semi-Annually
Landfill Gas System	Quarterly[2]	Semi-Annually[2]
Water Quality Monitoring	Semi-Annually[3]	Semi-Annually[3]
Landfill Gas Monitoring	Quarterly[4]	Quarterly[4]
Benchmark Integrity	Annually	Annually
Leachate Collection Pipe Inspection/Cleanout	See Note 5	

Notes:

1. These items will be inspected after each large storm event (i.e. $\geq$ 1 inch in any 24 hours).
2. Or in accordance with the current Landfill Gas Management Plan or air quality permit(s).
3. Or in accordance with groundwater monitoring schedule described in the current Water Quality Monitoring Plan.
4. Or in accordance with the current LFG Monitoring Plan.
5. Remote camera inspection and flushing (if necessary) of leachate collection piping (portion that can be inspected and cleaned) will be performed every 3 years. If piping is mostly clean at a 3-year interval, the County may petition the DWM to increase the inspection/cleaning frequency to a 5-year interval.

SECTION 3.0
CLOSURE/POST-CLOSURE COST ANALYSIS

3.1 OVERVIEW

The purpose of this section is to provide a written estimate in current dollars of costs associated with all activities specified in the written closure and post-closure plans which have been developed for the MSW and C&D landfill units of the Johnston County Landfill.

3.2 ESTIMATED CLOSURE COSTS

Tables 3.1A, 3.1B, 3.1C, and 3.1D summarize the estimated costs for complete closure of the MSW Phase 4A (Cells 1-3), MSW Phase 5, C&D Area 1, and C&D Area 2 (Cell 1) landfill units, respectively (the maximum area to be closed). The cost estimate for each unit is based on a third party providing the necessary services and includes labor in the unit prices given. The estimated closure costs will be reviewed and updated as required to reflect adjustments for inflation, increased costs in construction or materials, or any other adjustments to the Closure Plan.

3.3 ESTIMATED POST-CLOSURE COSTS

Tables 3.2A and 3.2B summarize the estimated costs for the post-closure care maintenance activities for MSW Phases 1-4A and C&D Areas 1-2[1] and the MSW Phase 5 landfill unit. The cost estimate for each is based on a third party providing the necessary services and includes labor in the unit prices given. The estimated post-closure costs will be reviewed and updated as required to reflect adjustments for inflation, rising costs of anticipated post-closure care, or any other adjustments to the Post-Closure Plan.

3.4 ESTIMATED ASSESSMENT AND CORRECTIVE ACTION COSTS

Table 3.3 summarizes the current potential assessment and corrective (remedial) action cost for the landfill facility. This cost is based on the required minimum amount ($2,000,000) per NCGS 130A 295.2(h) (as modified by Session Law 2011-262) and includes amounts for water quality and landfill gas (LFG) monitoring and reporting (per NC DWM policy) plus contingency funds to cover potential future assessment and corrective action costs.

3.5 FINANCIAL ASSURANCE MECHANISM

Johnston County intends to continue to use the Local Government Financial Test (15A NCAC 13B.1628(e)(1)(f)) to demonstrate financial assurance for this facility.

[1]The MSW Phases 1-4 units (previously closed), the MSW Phase 4A unit, and the C&D Areas 1 and 2 units are combined in that these units are in the same portion of the site.

TABLE 3.1A: MSW - PHASE 4A - CLOSURE COST ESTIMATE[1]

ITEM	QUANTITY	UNITS	UNIT COST	ITEM COST (2011 $)
Surface Preparation	29.4	Acre	$10,000	$294,000
Landfill Gas System	29.4	Acre	$15,000	$441,000
30 mil Textured LLDPE Geomembrane	1,281,000	SF	$0.45	$576,450
Drainage Geocomposite	1,281,000	SF	$0.55	$704,550
Vegetative Soil Layer (24")	95,000	CY	$5.00	$475,000
Erosion Control (Rain Gutters, Diversion Berms, Down Pipes, Drainage Channels, Etc.)	29.4	Acre	$15,000	$441,000
Revegetation	29.4	Acre	$1,500	$44,100
Surveying	29.4	Acre	$2,000	$58,800
			Subtotal:	$3,034,900
Bonds, Mobilization, & Insurance			(4% of Subtotal):	$121,396
			Subtotal:	$3,156,296
			Contingency (10%):	$315,630
			Construction Subtotal:	**$3,471,926**
Engineering	29.4	Acre	$2,000	$58,800
CQA	29.4	Acre	$6,000	$176,400
			TOTAL:	**$3,707,126**

Notes:

1. Assumes closure of 29.4 acres (Phase 4A).

TABLE 3.1B: MSW - PHASE 5 - CLOSURE COST ESTIMATE[1]

ITEM	QUANTITY	UNITS	UNIT COST	ITEM COST (2011 $)
Surface Preparation	19.2	Acre	$10,000	$192,000
Landfill Gas System	19.2	Acre	$15,000	$288,000
30 mil Textured LLDPE Geomembrane	837,000	SF	$0.45	$376,650
Drainage Geocomposite	837,000	SF	$0.55	$460,350
Vegetative Soil Layer (24")	62,000	CY	$5.00	$310,000
Erosion Control (Rain Gutters, Diversion Berms, Down Pipes, Drainage Channels, Etc.)	19.2	Acre	$15,000	$288,000
Revegetation	19.2	Acre	$1,500	$28,800
Surveying	19.2	Acre	$2,000	$38,400
			Subtotal:	$1,982,200
Bonds, Mobilization, & Insurance			(4% of Subtotal):	$79,288
			Subtotal:	$2,061,488
			Contingency (10%):	$206,149
			Construction Subtotal:	**$2,267,637**
Engineering	19.2	Acre	$2,000	$38,400
CQA	19.2	Acre	$6,000	$115,200
			TOTAL:	**$2,421,237**

Notes:

1. Assumes closure of 19.2 acres (Phase 5).

TABLE 3.1C: C&D - AREA 1 - CLOSURE COST ESTIMATE[1]

ITEM	QUANTITY	UNITS	UNIT COST	ITEM COST (2011 $)
Surface Preparation	12.9	Acre	$10,000	$129,000
Landfill Gas System	12.9	Acre	$15,000	$193,500
30 mil Textured LLDPE Geomembrane	562,000	SF	$0.45	$252,900
Drainage Geocomposite	562,000	SF	$0.55	$309,100
Vegetative Soil Layer (24")	42,000	CY	$5.00	$210,000
Erosion Control (Rain Gutters, Diversion Berms, Down Pipes, Drainage Channels, Etc.)	12.9	Acre	$15,000	$193,500
Revegetation	12.9	Acre	$1,500	$19,350
Surveying	12.9	Acre	$2,000	$25,800
			Subtotal:	$1,333,150
Bonds, Mobilization, & Insurance			(4% of Subtotal):	$53,326
			Subtotal:	$1,386,476
			Contingency (10%):	$138,648
			Construction Subtotal:	**$1,525,124**
Engineering	12.9	Acre	$2,000	$25,800
CQA	12.9	Acre	$6,000	$77,400
			TOTAL:	**$1,628,324**

Notes:

1. Assumes closure of 12.9 acres (Area 1).

TABLE 3.1D: C&D - AREA 2 - CLOSURE COST ESTIMATE[1]

ITEM	QUANTITY	UNITS	UNIT COST	ITEM COST (2011 $)
Surface Preparation	11.9	Acre	$10,000	$119,000
Landfill Gas System	11.9	Acre	$15,000	$178,500
30 mil Textured LLDPE Geomembrane	519,000	SF	$0.45	$233,550
Drainage Geocomposite	519,000	SF	$0.55	$285,450
Vegetative Soil Layer (24")	39,000	CY	$5.00	$195,000
Erosion Control (Rain Gutters, Diversion Berms, Down Pipes, Drainage Channels, Etc.)	11.9	Acre	$15,000	$178,500
Revegetation	11.9	Acre	$1,500	$17,850
Surveying	11.9	Acre	$2,000	$23,800
			Subtotal:	$1,231,650
Bonds, Mobilization, & Insurance			(4% of Subtotal):	$49,266
			Subtotal:	$1,280,916
			Contingency (10%):	$128,092
			Construction Subtotal:	**$1,409,008**
Engineering	11.9	Acre	$2,000	$23,800
CQA	11.9	Acre	$6,000	$71,400
			TOTAL:	**$1,504,208**

Notes:

1. Assumes closure of 11.9 acres (Area 2 - Cell 1).

TABLE 3.2A: MSW PHASES 1-4A - C&D AREAS 1-2 - POST-CLOSURE COST ESTIMATE[1]

ITEM	QUANTITY	UNIT	UNIT COST	TOTAL (2011 $)
Site Inspection And Record Keeping	80	HR	$75	$6,000
Revegetation (5% Total Area)	5	Acre	$1,500	$7,500
Mowing (once per year)	100	Acre	$100	$10,000
Erosion Control	1	LS	$5,000	$5,000
Gates/Fences/Access	1	LS	$2,000	$2,000
LFG System[2]	1	LS	$5,000	$5,000
Leachate Management[3]	1	LS	$45,149	$45,149
			Subtotal:	$80,649
			Contingency (10%):	$8,065
			ANNUAL TOTAL:	**$88,714**
			30-YEAR TOTAL:	**$2,661,420**

Notes:

1. Assumes post-closure of 100 acres (MSW Phases 1-4A and C&D Areas 1 and Area 2 - Cell 1).
2. LFG system costs include basic maintenance necessary for regulatory compliance ($4,000 per year) and decommissioning ($1,000 per year to account for half of assumed $60,000 cost) at end of post-closure period.
3. Leachate treatment based on 100 gal/ac/day x 41.3 acres lined x 365 x $20/1,000 gal. ($30,149/year) plus $5,000/year staff cost plus $3,000/year lab cost plus $2,000/year leachate collection line cleanout costs. Also include $5,000 per year to account for decommissioning leachate facilities (storage lagoon) (half of assumed $300,000 assumed cost) at the end of the post-closure period.

TABLE 3.2B: MSW PHASE 5 - POST-CLOSURE COST ESTIMATE[1]

ITEM	QUANTITY	UNIT	UNIT COST	TOTAL (2011 $)
Site Inspection And Record Keeping	20	HR	$75	$1,500
Revegetation (5% Total Area)	1	Acre	$1,500	$1,500
Mowing (once per year)	20	Acre	$100	$2,000
Erosion Control	1	LS	$5,000	$5,000
Gates/Fences/Access	1	LS	$2,000	$2,000
LFG System[2]	1	LS	$5,000	$5,000
Leachate Management[3]	1	LS	$29,016	$29,016
			Subtotal:	$46,016
			Contingency (10%):	$4,602
			ANNUAL TOTAL:	**$50,618**
			30-YEAR TOTAL:	**$1,518,540**

Notes:

1. Assumes post-closure of 19.2 acres (MSW Phase 5).
2. LFG system costs include basic maintenance necessary for regulatory compliance ($4,000 per year) and decommissioning ($1,000 per year to account for half of assumed $60,000 cost) at end of post-closure period.
3. Leachate treatment based on 100 gal/ac/day x 19.2 acres lined x 365 x $20/1,000 gal. ($14,016/year) plus $5,000/year staff cost plus $3,000/year lab cost plus $2,000/year leachate collection line cleanout costs. Also include $5,000 per year to account for decommissioning leachate facilities (storage lagoon) (half of assumed $300,000 assumed cost) at the end of the post-closure period.

TABLE 3.3: ASSESSMENT & CORRECTIVE ACTION COST ESTIMATE[1]

ITEM	ANNUAL COST	30-YEAR TOTAL (2011 $)
MSW - Phases 1-4A - C&D Areas 1-2 (See Notes 2 and 4):		
Water Quality Monitoring & Reporting	$66,000	$1,980,000
LFG Monitoring & Reporting	$ 3,000	$90,000
MSW - Phase 5 (See Notes 3 and 4):		
Water Quality Monitoring & Reporting	$34,000	$1,020,000
LFG Monitoring & Reporting	$ 3,000	$90,000
	TOTAL:	**$3,180,000**

Notes:

1. Per NCGS 130A 295.2(h) (as modified by Session Law 2011-262).
2. The water quality monitoring and reporting cost for MSW Phases 1-4A and C&D Areas 1-2 assumes 33 long-term wells/points sampled semi-annually @ $33,000 per event (annual cost = $66,000).
3. The water quality monitoring and reporting cost for MSW Phase 5 assumes 17 long-term wells/points sampled semi-annually @ $17,000 per event (annual cost = $34,000).
4. The LFG monitoring and reporting costs assume quarterly monitoring for each unit at a cost of: $750/event (MSW Phases 1-4A and C&D Areas 1-2) (annual cost = $3,000); $750/event (MSW Phase 5) (annual cost = $3,000). Cost is reflective of combined monitoring events for both areas.

Attachment E

Water Quality Monitoring Plan

Permit Amendment Application
Johnston County C&D Landfill – Area 2 (Permit No. 51-03)

Water Quality Monitoring Plan

Johnston County Landfill Facility
Smithfield, North Carolina

Prepared for:
Johnston County Department of Public Utilities
Smithfield, North Carolina

Joan A. Smyth 8/24/12

NORTH CAROLINA LICENSED SEAL 1369 GEOLOGIST JOAN A. SMYTH

Joan A. Smyth, P.G

August 2012

NC LIC. NO. C-0823 (ENGINEERING)

SMITH+GARDNER

14 N. Boylan Avenue, Raleigh NC 27603 | 919.828.0577

PRINTED ON 100% RECYCLED PAPER

JOHNSTON COUNTY LANDFILL
WATER QUALITY MONITORING PLAN

TABLE OF CONTENTS

1.0 INTRODUCTION 1
1.1 Overview 1
1.2 Contact Information 2
1.2.1 Johnston County Landfill 2
1.2.2 Engineer 2
1.2.3 NCDENR 2
1.3 Site Background 3
1.3.1 Geology 3
1.3.2 Hydrogeology 3
2.0 MONITORING PROGRAM 4
2.1 Overview 4
2.2 Monitoring Network and Analytical Parameters 4
2.2.1 Modifications from Previous Monitoring Network 4
2.3 Groundwater Sample Collection 5
2.3.1 Introduction 5
2.3.1.1 Guidance Documents 5
2.3.1.2 Fuel-Powered Equipment 6
2.3.1.3 Equipment Decontamination 6
2.3.2 Water Level Measurements 6
2.3.2.1 Static Water Levels 6
2.3.2.2 Contamination Prevention 7
2.3.2.3 Equipment 7
2.3.3 Monitoring Well Evacuation 7
2.3.3.1 Description 7
2.3.3.2 Contamination Prevention 7
2.3.3.3 Calculations 8
2.3.3.4 Well Purging 8
2.3.3.5 Purge Rate 10
2.3.3.6 Purge Water Disposal 10
2.3.3.7 Non-Dedicated Equipment 10
2.3.4 Sample Collection 10
2.3.4.1 Field Parameters 11
2.3.4.2 Sample Equipment 11
2.3.4.3 Sample Transfer 11
2.3.4.4 Order of Sample Collection 12
2.3.4.5 Decontamination 12
2.3.4.6 Sample Preservation 12
2.3.4.7 Field Quality Assurance 12
2.3.4.8 Sample Containers 13
2.4 Surface Water Sample Collection 13
2.4.1 Surface Water Level Observations 13
2.4.1.1 Monitoring Conditions 13
2.4.1.2 Monitoring Condition Modification 13
2.4.2 Sample Collection 14

2.4.2.1 Collection Procedure 14
2.4.2.2 Field Parameters 14
2.4.2.3 Observation 14
2.4.2.4 Decontamination 15
2.4.2.5 Sample Containers 15
3.0 FIELD QA/QC PROGRAM 16
3.1 Overview 16
3.2 Blank Samples 16
3.2.1 Trip Blanks 16
3.2.2 Equipment Blanks 16
3.3 Blank Concentrations 16
3.4 Field Instruments 16
4.0 SAMPLE PRESERVATION AND SHIPMENT 17
4.1 Overview 17
4.2 Sample Preservation 17
4.3 Storage/Transport Conditions 17
4.4 Sample Delivery 17
4.5 Chain of Custody 17
5.0 LABORATORY ANALYSIS 19
5.1 Overview 19
5.2 Laboratory Quality Assurance/Quality Control 19
5.3 Laboratory Quality Control Checks 19
5.4 Data Review 19
6.0 RECORD KEEPING AND REPORTING 20
6.1 Overview 20
6.1 FIELD LOGBOOK 20
6.2 Groundwater System Evaluations 20
6.3 Result Reporting 21
7.0 MONITORING PROGRAM MODIFICATIONS 22
7.1 Overview 22
7.2 Well Abandonment/Rehabilitation 22
7.3 Additional Well Installations 22
7.4 Implementation Schedule 22

Figures

Figure 1 Water Quality Monitoring Locations

Tables

Table 1 Monitoring Network
Table 2 Water Quality Monitoring Parameters

Appendices

Appendix A Environmental Monitoring Reporting Form

1.0 INTRODUCTION

1.1 OVERVIEW

This Water Quality Monitoring Plan (WQMP) specifies the procedures and requirements to satisfy North Carolina Solid Waste Management Rule 15A NCAC 13B.0544 (b) and (c). The WQMP addresses two major elements: groundwater system monitoring/sampling and surface water monitoring/sampling.

The WQMP will meet the following requirements:

- *Represent the quality of the background groundwater that has not been affected by leakage from the unit (.0544 (b)(1)(A) and .1631(1)).*
- *Represent the quality of the groundwater passing the relevant point of compliance as approved by the Division (.0544 (b)(1)(B) and .1631(2)).*
- *The groundwater monitoring programs must include consistent sampling and analysis procedures that are designed to ensure monitoring results that provide an accurate representation of groundwater quality at the background and down-gradient wells (.0544 (b)(1)(C) and .1632(a)).*
- *Detection Groundwater monitoring program (.0544 (b)(1)(D) and .1633).*
- *The sampling procedures and frequency must be protective of human health and the environment (.0544 (b)(1)(E) and .1632(c) and .1633(b)).*
- *Responsibility of sample collection and analysis must be defined as a part of the monitoring plan (.0544 (c)(2) and .1632).*

This WQMP also addresses the following procedures that will be implemented to ensure the integrity of each sampling event:

- Sample preservation and shipment;
- Laboratory analytical procedures;
- Sample Chain-of-custody control; and
- Quality assurance/quality control programs.

The methods and procedures described in the WQMP are intended to facilitate the collection of true and representative samples and test data. Field procedures are presented in Section 2.0 in their general order of implementation. Equipment requirements for each field task are presented within the applicable section. Laboratory procedures, quality assurance methods, and record keeping requirements are presented in Sections 3.0 through 6.0.

Strict adherence to the procedures stipulated in this plan is required. Any variations from these procedures should be thoroughly documented.

1.2 CONTACT INFORMATION

In case of emergencies, or if questions arise during the implementation of this program, please contact the following:

1.2.1 Johnston County Landfill

680 County Home Road
Smithfield, North Carolina 27577
Phone: (919) 638-4750
Fax: (919) 934-7174
Mr. Rick Proctor – Solid Waste Division Manager
rick.proctor@johnstonnc.com

1.2.2 Engineer

Smith Gardner, Inc.
14 N. Boylan Avenue
Raleigh, North Carolina 27603
Phone: (919) 828-0577
Fax: (919) 828-3899

Ms. Joan A. Smyth, P.G. – Senior Hydrogeologist
joan@smithgarnderinc.com

Mr. Pieter K. Scheer, P.E. – Senior Engineer
pieter@smithgardnerinc.com

1.2.3 NCDENR

North Carolina Department of Environment and Natural Resources
Division of Waste Management:

Raleigh Central Office (RCO)
217 W Jones Street
Raleigh, North Carolina 27603
Phone: (919) 707-8200

Fayetteville Regional Office (FRO)
225 Green Street, Suite 714
Fayetteville, North Carolina 28301
Phone: (910) 486-1541
Fax: (910) 486-0707

Division of Waste Management (DWM) – Solid Waste Section

Field Operations Branch Head:	Mark Poindexter (RCO)
Eastern District Supervisor:	Dennis Shackelford (FRO)
Waste Management Specialist:	Mary Whaley ((919) 693-5023)

1.3 SITE BACKGROUND

The Johnston County Landfill Facility (Permit 51-03), located at 680 Country Home Road, Smithfield, NC, has been in operation since 1973, and contains multiple lined and unlined municipal solid waste (MSW) and construction and demolition debris (C&D) units. The facility is located approximately 5 miles west of Smithfield. Local development consists of a mix of residential and agricultural use. The site and monitoring locations are shown on Figure 1.

1.3.1 Geology

The site is located in the western portion of the Coastal Plain Province in the fall zone. The formations found in this area consist of sediments of Cretaceous and Tertiary age, unconformably overlying metamorphic rocks of Pre-Cambrian to Cambrian age. The site is underlain by sediments of the Middendorf Formation which were deposited largely in a deltaic system. According to Geology of the Carolinas (Horton/Zullo, 1991) the formation consists of unfossiliferous, interbedded, thin clay and sand. The stratigraphy tends to be very discontinuous, indicating that the sediment deposits are lenticular. Most of the sediments range from silty clay to a coarse clayey sand and gravel with thin lenses of dense clay. There are occasional concretions of iron oxide minerals which form very hard thin layers within the sand layers. The Middendorf Formation dips very gently to the east, and is underlain by highly weathered metamorphic rocks of the Carolina Slate Belt.

Borings advanced at the site encountered sandy silts consistent with the Middendorf Formation, and partially weathered rock above bedrock. The bedrock encountered was a metamorphosed mudstone. The depths of these borings ranged between 15 feet and 75 feet deep. The unconsolidated sediments consisted of mostly silty sands and sandy silts with some clayey sand as well. The metamudstone bedrock was encountered at a depth of approximately 15 feet in the floodplain around the site, and at a depth of approximately 50 feet elsewhere on-site. Diabase dikes have also been located at the site beneath the Area 2 C&D landfill unit, the floodplain of Middle Creek, and the Phase 5 MSW landfill unit.

1.3.2 Hydrogeology

The hydrogeology at this site has been investigated through numerous piezometers, groundwater monitoring wells, aquifer slug tests and aquifer pumping tests. Groundwater flow is generally north across the site, except for the Phase 5 unit where the flow is generally northwest; in both instances groundwater flows toward Middle Creek, the local discharge feature. The uppermost aquifer consists of sands and silts and is unconfined in nature. Depth to groundwater ranges from approximately 5 to 40 feet below grade across the site.

The uppermost aquifer at the site primarily consists of silty and clayey sands. Hydraulic conductivity values measured in the soil aquifer varies on the order of 0.0083 ft/day to 0.289 ft/day based upon prior investigations.

2.0 MONITORING PROGRAM

2.1 OVERVIEW

This section of the Water Quality Monitoring Plan addresses each aspect of the monitoring program. At a minimum, Johnston County Landfill will monitor the groundwater quality on a semi-annual basis.

2.2 MONITORING NETWORK AND ANALYTICAL PARAMETERS

Historic groundwater elevations indicate that groundwater generally flows north at the MSW and C&D landfill toward the discharge point of Middle Creek. There are 26 groundwater wells, 4 surface water locations and 8 leachate sampling points proposed for inclusion in the monitoring network. In general, these are similar to the previous Water Quality Monitoring Plan; however, modifications from prior monitoring events are discussed in detail in Section 2.2.1.

The monitoring network was installed to monitor groundwater in the uppermost aquifer and is expected to be adequate to detect releases from the landfill. The monitoring system is shown on Figure 1. Well locations are summarized in Table 1 and Appendix I parameters are listed in Table 2.

2.2.1 Modifications from Previous Monitoring Network

The Johnston County Landfill Facility (Permit#51-03) is composed of multiple adjacent/"piggy-back" landfill units that have been previously reported under three separate covers: Johnston County C&D, Johnston County MSW Phases 1-4 and 4A and Johnston County MSW Phase 5. The various units were installed at different times creating multiple well sets with each expansion. To improve cohesiveness, avoid redundancy, and remove potential false positive detections, the monitoring network will be sampled and reported together.

Monitoring wells labeled "CDMW" have historically been associated with the lined Area C&D landfill unit and are located in this general vicinity. Monitoring wells labeled "MW-5" have historically been associated with the lined Phase 5 MSW landfill unit. The remaining wells are associated with unlined MSW Phases 1-4 and double-lined Phase 4A MSW landfill unit which "piggy-backs" on unlined MSW Phases 3 and 4. The landfill units and the existing groundwater monitoring well locations are shown on Figure 1. Monitoring well MW-3 will be used as the background (upgradient) well for the entire facility.

Wells (CDMW-2, CDMW-4, CDMW-9D, MW-3, MW-4B, MW-8D, MW-11, MW-12B, MW5-2, MW5-6, MW5-8 and PZ-3) will be sampled semi-annually. Background locations and those wells with frequent detections above the ground water standard (15A NCAC 2L.0100 et seq) that require consistent monitoring are included in this group. These well locations provide advance notice of potential contamination prior to the relative point of compliance.

Wells (CDMW-4, CDMW-6, CDMW-7, CDMW-8, MW-6, MW-14D, MW-15D, MW-16D, MW5-3, MW5-4, MW5-5, MW5-7, MW5-9 and MW5-10) will be sampled annually. These locations have historically had minimal to no detections and are in locations that provide data on groundwater contamination before it reaches the relative point of compliance.

Wells (CDMW-1, CDMW-3, CDMW-5, CDMW-5D, CDMW-8D, CDMW-9, MW-4D, MW-5A, MW-7, MW-7B, MW-7D, MW-8A, MW-9C, MW-9D, MW-10, MW-17 and MW5-1) will be removed from the monitoring network. Wells were chosen to be removed from the network due to redundancy, inadequate recharge, or locations too close to the waste limit which potentially invalidates the data. These wells will not be abandoned but remain in place for additional water level data or potential additional sampling in the event further delineation data is necessary in the future.

Surface water sampling locations (SW-1, SW-2, SW5-1 and SW5-2) will be utilized to monitor Middle Creek and its tributaries for potential impact from the landfill. Sampling point CDSW-1 was chosen to be removed from the network due to being historically dry. Surface water locations will be sampled semi-annually.

Monitoring of wells surrounding the leachate storage pond (Leachate lagoon #1, leachate lagoon #2, leachate lagoon #3 and leachate lagoon #4) will be performed annually.

Leachate sampling locations for the Phase 4A MSW Landfill, the Phase 4A leak detection zone, the Phase 5 – north end manhole, and lined C&D landfill will be sampled semi-annually. The leachate junction box for multiple landfill units was removed from the monitoring network because it is a composite leachate sample that does not provide additional data. Leachate will be monitored in accordance with the guidance detailed in Section 2.3.1.1.

2.3 GROUNDWATER SAMPLE COLLECTION

2.3.1 Introduction

This section presents details of the procedures and equipment required to perform groundwater field measurements and sampling from monitoring wells during each monitoring event. Where possible, sampling will proceed from least to (potentially) most contaminated, or from the upgradient (background) wells to downgradient (compliance) wells.

2.3.1.1 Guidance Documents

Sampling, analysis, and submittals will be performed in accordance with this plan and the following guidance documents:

1. Groundwater, Surface Water and Soil Sampling for Landfills – NCDENR Guidance updated April 2008.

2. October 27, 2006 Memo from NCDENR entitled "New Guidelines for Electronic Submittal of Environmental Monitoring Data."

3. February 23, 2007 Memo from NCDENR entitled Addendum to October 27, 2006, North Carolina Solid Waste Section Memorandum Regarding New Guidelines for Electronic Submittal of Environmental Data.

4. October 16, 2007 Memo from NCDENR entitled Environmental Monitoring Data for North Carolina Solid Waste Management Facilities.

2.3.1.2 Fuel-Powered Equipment

Fuel-powered equipment, such as generators for pumps, must be situated away and downwind from sampling activities (i.e. purging and sampling). If field conditions prevent such placement, then the fuel source must be placed as far away as possible from the sampling activities. Sampling conditions must be described in detail in the field notes.

If fuel must be handled, it should be done the day before sampling. Effort should be made to avoid handling fuels on the day of sampling. If fuels must be dispensed during sampling activities, dispense fuel downwind and well away from any sampling locations. Wear gloves while working with fuel and dispose of the gloves away from sampling activities. Wash hands thoroughly after handling any fuels.

2.3.1.3 Equipment Decontamination

Non-dedicated equipment that may come in contact with the well casing and water will be decontaminated between wells. The procedure for decontaminating non-dedicated equipment is as follows:

1. Don new powder-free gloves.

2. Clean item with tap water and phosphate-free laboratory detergent Liqui-Nox or equivalent using a brush if necessary to remove particulate matter and surface films.

3. Rinse thoroughly with pesticide grade isopropanol and allow to air dry.

4. Rinse with organic-free water (Milli-Q water or other ultra-pure water) and allow to air dry.

5. Wrap with commercial-grade aluminum foil, if necessary, to prevent contamination of equipment during storage or transport.

Please note that Liqui-Nox detergent solutions will be stored in a clearly marked HDPE or PP container. Containers for pesticide-grade isopropanol will be made of inert materials such as Teflon, stainless steel, or glass.

Sampling will be planned and conducted to minimize the need for decontamination in the field through the use of dedicated sampling equipment, or a new, disposable, Teflon bailer at each well. Unclean equipment will be segregated from clean equipment during field activities. Clean equipment will remain in the manufacturer's packaging until use, or will be wrapped in commercial-grade aluminum foil or untreated butcher paper.

2.3.2 Water Level Measurements

2.3.2.1 Static Water Levels

Static water level and depth to the well bottom will be measured in each well prior to any purging or sampling activities. Static water level and well depth measurements are necessary to calculate the volume of stagnant water in the well prior to purging. Additionally, these measurements provide a field check on

well integrity, degree of siltation, and are used to prepare potentiometric maps, calculate aquifer flow velocities and monitor changes in site hydrogeologic conditions.

Groundwater depths will be measured to a vertical accuracy of 0.01 feet relative to established wellhead elevations. Each well will have a permanent, easily identified reference point on the lip of the well riser from which water level measurements will be taken. The elevation of the reference point will be established by a Registered Land Surveyor.

2.3.2.2 Contamination Prevention

Upon opening each well, new powder-free nitrile surgical gloves will be donned. Appropriate measures will be implemented during measurement activities to prevent soils, decontamination supplies, precipitation, and other potential contaminants from entering the well or contacting clean equipment.

2.3.2.3 Equipment

An electronic water level indicator will be used to accurately measure depth to groundwater in each well and/or piezometer. The electronic water level indicator will be constructed of inert materials such as stainless steel and Teflon. Between each well, the device will be thoroughly decontaminated by washing with non-phosphate (Liqui-Nox) soap and rinsing with organic-free water to prevent cross contamination from one well to another.

The following measurements will be recorded in a dedicated field book prior to sample collection (see Section 6.0 for a detailed description of collected field notes):

- Depth to static water level and well bottom (to the nearest 0.01 foot);
- Height of water column in the riser (based upon measured depth of well);
- Condition of wellhead protective casing, base pad and riser; and
- Changes in condition of well and surroundings.

2.3.3 Monitoring Well Evacuation

2.3.3.1 Description

Water accumulated in each well may be stagnant and unrepresentative of surrounding aquifer conditions and therefore must be removed to insure that fresh formation water is sampled. Each well will be purged of standing water in the well casing following the static water level measurement. Ideally, monitoring well evacuation should be performed in upgradient wells first then systematically move to downgradient well locations.

2.3.3.2 Contamination Prevention

New, non-powdered, nitrile surgical gloves will be donned for well purging and sampling activities and whenever handling decontaminated field equipment. Appropriate measures will be applied during measurement, purging and sampling activities to prevent surface soils, decontaminated supplies,

precipitation, and other potential contaminants from entering the well or contacting cleaned equipment.

2.3.3.3 Calculations

The volume of standing water in the well riser and screen will be calculated immediately before well evacuation during each monitoring event. A standing water volume will be calculated for each well using measured static water level, well depth and well casing diameter according to the following equation:

$$V = (TD - SWL) \times C$$

Where:
- V = One well volume (gallons)
- TD = Total depth of the well (in feet)
- SWL = Static water level (in feet)
- C = Volume constant for given well diameter (gallons/foot)
  - C = 0.163 gal/ft for two-inch wells.
  - C = 0.653 gal/ft for four-inch wells.

2.3.3.4 Well Purging

Several options for well purging are used at this site including:

- Bailers;
- Low Flow Pumps; and
- Grundfos Redi-Flo Pumps.

Bailers – Where bailers are used, new, disposable bailers with either double or bottom check-valves will be used to purge each well. Disposable purge bailers will be constructed of fluorocarbon resin (Teflon) or inert plastic suitable for the well and ground conditions. Each bailer will be factory-clean and remain sealed in a plastic sleeve until use. A new Teflon-coated stainless steel, inert mono-filament line or nylon cord will be used for each well to retrieve the bailers. Where bailers are used, a minimum of three well volumes will be purged unless the well runs dry.

Low Flow Pumps – Monitoring wells may be purged and sampled using the low-flow sampling method in accordance with the *Solid Waste Section Guidelines for Groundwater, Soil, and Surface Water Sampling* (NCDENR, 2008).

Obtain depth-to-water measurements using an electronic water level indicator capable of recording the depth to an accuracy of 0.01 foot. Determine if the water table is located within the screened interval of the well. If the water table is not within the screened interval, the achievable drawdown before intersection with the screen will be calculated. If the water table is within the screened interval, total drawdown should not exceed 1 foot to minimize the aeration and turbidity. If the water table is above the top of the screened interval, drawdown should be minimal to prevent screen exposure.

If the purging equipment is non-dedicated, the equipment will be lowered into the well, taking care to minimize water column disturbance. If conditions (i.e., water column height and well yield) allow, the pump will be situated in the upper portion of the water column (minimum of 18 inches of pump submergence is recommended).

The minimum volume/time period for obtaining independent Water Quality Parameter Measurements (WQPM) will be determined. The minimum volume/time period is determined based on the stabilized flow rate and the amount of volume in the pump and the discharge tubing (alternatively, the volume of the flow cell can be used, provided it is greater than the volume of the pump and discharge tubing). Bladder pump volume should be obtained from the manufacturer. Discharge tubing volumes are as follows:

3/8-inch inside diameter tubing:	20 milliliters per foot
1/4-inch inside diameter tubing:	10 milliliters per foot
3/16-inch inside diameter tubing:	5 milliliters per foot

Begin purging the well after calculating the volume of the flow-cell or the pump and the discharge tubing. The flow rate should be based on historical data for that well (if available) and should not exceed 500 milliliters per minute. The initial round of WQPM should be recorded and the flow rate adjusted until drawdown in the well stabilizes. Water levels should be measured periodically to maintain a stabilized water level. The water level should not fall within 1 foot of the top of the well screen. If the purge rate has been reduced to 100 milliliters or less and the head level in the well continues to decline, the required water samples should be collected following stabilization of the WQPM, based on the criteria presented below.

If neither the head level nor the WQPM stabilize, a passive sample should be collected. Passive sampling is defined as sampling before WQMP have stabilized if the well yield is low enough that the well will purge dry at the lowest possible purge rate (generally 100 milliliters per minute or less).

WQPM stabilization is defined as follows: pH (+/- 0.2 S.U.), conductance (+/- 5% of reading), temperature (+/- 10% of reading or 0.2°C) and dissolved oxygen [+/- 20% of reading or 0.2 mg/L (whichever is greater)]. Oxidation reduction potential (ORP) will be measured and ideally should also fall within +/- 10mV of reading; however, this is not a required parameter. At a minimum, turbidity measurements should also be recorded at the beginning of purging, following the stabilization of the WQPM, and following the collection of the samples. The optimal turbidity range for micropurging is 25 Nephelometric Turbidity Units (NTU) or less. Turbidity measurements above 25 NTU are generally indicative of an excessive purge rate or natural conditions related to excessive fines in the aquifer matrix.

Stabilization of the WQPM should occur in most wells within five to six rounds of measurements. If stabilization does not occur following the removal of a purge volume equal to three well volumes, a passive sample will be collected.

The direct-reading equipment used at each well will be calibrated in the field according to the manufacturer's specifications prior to each day's use and checked at a minimum at the end of each sampling day. Calibration information should be documented in the instrument's calibration logbook and the field book.

Each well is to be sampled immediately following stabilization of the WQPM. The sampling flow rate must be maintained at a rate that is less than or equal to the purging rate. For volatile organic compounds, lower sampling rates (100 - 200

milliliters/minute) should be used. Final field parameter readings should be recorded prior to and after sampling.

Grundfos Redi-Flo Pumps – Where Redi-Flo pumps are used, the same low flow techniques for sampling will be used as described in the above Low Flow Pump section.

2.3.3.5 Purge Rate

Wells will be purged at a rate that will not cause recharge water to be excessively agitated or cascade through the screen. Methods will minimize disturbance to well sidewalls and bottoms which could result in silt and fine particulate matter suspension. The water volume purged from each well and the relative recharge rate will be documented in sampling field notes. Wells with very low recharge rates will be purged until dry. Damaged, dry or low yielding and high turbidity wells will be documented for reconsideration before the next sampling event.

2.3.3.6 Purge Water Disposal

Purge water will be managed to prevent possible soil and surface water contamination. Well site management options may include temporary containment and disposal as leachate or portable activated carbon filtration if warranted by field characteristics.

2.3.3.7 Non-Dedicated Equipment

Durable, non-dedicated equipment that is lowered into the well or which may come in contact with the water samples will be thoroughly decontaminated before each use. Equipment will be disassembled to the degree practical, washed with (non-phosphate) soapy potable tap water, and triple rinsed using de-ionized water. Detailed equipment decontamination procedures are detailed in Section 2.3.1.3.

2.3.4 Sample Collection

After purging activities are complete, groundwater samples will be collected for laboratory analysis. Samples should be collected from least contaminated location(s) first, followed by locations of increasing contamination across the site. Prior to sample collection, sample labels should be properly filled-out with permanent ink, such as Sharpie Pen. At a minimum, the label should identify the sample with the following information:

- Sample Location or Well Number;
- Sample Identification Number;
- Date and Time of Collection;
- Analysis Required;
- Sampler's Initials;
- Preservative Used (if any); and

- Other Pertinent Information As Necessary.

Affix completed sample labels to the sample bottle prior to sampling.

Sampling will occur within 24-hours of the well purging and as soon after well recovery as possible. Wells that fail to recharge or produce an adequate sample volume within 24-hours of purging will not be sampled.

2.3.4.1 Field Parameters

Field measurements for temperature, pH and specific conductance will be recorded immediately prior to sampling each monitoring point. For low-flow sampling, dissolved oxygen (DO) and oxidation reduction potential (ORP) will also be collected. Additionally, turbidity measurements should be collected for metals evaluation. The field test specimens will be collected with the sampling bailer and placed in a clean, non-conductive glass or plastic container for observation. PH, temperature, conductivity and turbidity meter calibration will be completed according to the manufacturers' specifications and consistent with Test Methods for Evaluating Solid Waste -Physical/Chemical Methods (SW-846). A pocket thermometer and litmus paper will be available in case of meter malfunction.

2.3.4.2 Sample Equipment

Several options for sample collection are used at this site including:

- Teflon Bailers;
- Low Flow Pumps and
- Grundfos Redi-Flo Pumps.

Of these, Low Flow purging/sampling systems are the most prevalent as the Grundfos pumps are utilized for low flow purging/sampling. Low flow purging/sampling is recommended for this site wherever possible.

Teflon Bailers – Where bailers are used, each well will be sampled using a new, factory-cleaned, disposable Teflon bailer with bottom check-valve and sample discharge mechanism. A new segment of Teflon-coated stainless steel wire, inert mono-filament line or nylon cord will be used to lower and retrieve each bailer. The bailer will be lowered into each well to the point of groundwater contact and allowed to fill as it sinks below the water table. Bottom contact will be avoided in order to avoid suspending sediment in the samples. The bailer will be retrieved and emptied in a manner which minimizes sample agitation.

Low Flow Pumps – After purging with the low flow pump systems samples may be collected immediately from the pumping system following the order outlined in Section 2.3.4.4.

Redi-Flo Pumps - After purging three well volumes samples may be collected from the Redi-Flo pumps in the order outlined in Section 2.3.4.4.

2.3.4.3 Sample Transfer

Samples will be transferred directly from the Teflon bailer into a sample container that has been specifically prepared for the preservation and storage of

compatible parameters. A bottom emptying device provided will be used to transfer samples from bailer to sample container. The generation of air bubbles and sample agitation will be minimized during bailer discharge. Groundwater samples will be collected and contained in the order of volatilization sensitivity.

2.3.4.4 Order of Sample Collection

The following sampling order will be observed:

- Volatile Organics and Volatile Inorganics;
- Extractable Organics, Petroleum Hydrocarbons, Aggregate Organics and Oil and Grease;
- Total Metals;
- Inorganic Nonmetallics, Physical and Aggregate Properties and Biologicals;
- Microbiologicals; and
- Measurements of pH, Temperature, DO, ORP, Conductivity and Turbidity.

Note: If the pump used to collect groundwater samples is not suitable to collect volatile or extractable organics then collect the other parameters and withdraw the pump and tubing. Then collect the volatile and extractable organics.

Samples will be collected and analyzed in an **unfiltered** state during sampling events. Samples for dissolved metal analysis, if subsequently required, will be prepared by field filtration using a decontaminated peristaltic pump and a disposable 0.45 micron filter cartridge specifically manufactured for this purpose.

2.3.4.5 Decontamination

Reusable sampling equipment including water level probes, water quality meters, interface probes and filtering pumps which might contact aquifer water or samples will be thoroughly decontaminated between wells by washing with non-phosphate soapy, de-ionized water and rinsing with isopropanol and organic-free water. Detailed equipment decontamination procedures are discussed in **Section 2.3.1.3**.

2.3.4.6 Sample Preservation

Following sampling at each location, the sample bottles will be placed in a cooler with ice for preservation and transport.

2.3.4.7 Field Quality Assurance

Equipment and trip blanks will be prepared, handled and analyzed as groundwater samples to ensure cross-contamination has not occurred. Trip blanks will be prepared before leaving the laboratory to ensure the sample containers or handling processes have not affected the sample quality. Equipment blanks will be poured through the bailer into laboratory prepared sampling containers at the time of sampling to ensure the field conditions,

equipment and handling during sampling collection have not affected the sample quality. This sample will be collected using the same equipment utilized for well sampling. A duplicate groundwater sample may be collected from a single well as a laboratory accuracy check. Blanks and duplicate containers, preservatives, handling and transport procedures for surface water samples are identical to those noted for groundwater samples. Additional information on Field Quality Assurance can be found in Section 3.0.

2.3.4.8 Sample Containers

Sample containers will be provided by the laboratory for each sampling event. Containers must be either new, factory-certified analytically clean by the manufacturer, or cleaned by the laboratory prior to shipment for sampling. Laboratory cleaning methods will be based on the bottle type and analyte of interest. Metal containers are thoroughly washed with non-phosphate detergent and tap water and rinsed with (1:1) nitric acid, tap water, (1:1) hydrochloric acid, tap water and non-organic water, in that order. Organic sample containers are thoroughly washed with non-phosphate detergent in hot water and rinsed with tap water, distilled water, acetone, and pesticide quality hexane, in that order. Other sample containers are thoroughly washed with non-phosphate detergent and tap water, rinsed with tap water, and rinsed with non-organic water. The laboratory will provide proper preservatives in the sample containers prior to shipment.

2.4 SURFACE WATER SAMPLE COLLECTION

This section presents procedure and equipment details required to perform surface water field measurements and sampling from springs, streams and ponds during each monitoring event.

2.4.1 Surface Water Level Observations

Surface water quality analyses are sensitive to site hydrologic conditions and recent precipitation events. Water levels may fluctuate significantly in comparison the groundwater table and may result in either diluting or increasing contaminant loading. Sampling event scheduling and the interpreted surface water data must account for recent weather and sampling station conditions.

2.4.1.1 Monitoring Conditions

Surface water level and sampling station conditions may be observed one day prior to and during each sampling event, if warranted by site conditions. Surface water observations will include the flood stage in streams, seasonal base flow conditions, and confirmation of location and timing for meaningful surface water quality sampling. The following objective observations will be recorded in a dedicated field book prior to sample collection:

- Relative stream water level;
- Surface water clarity; and
- Changes in surface monitoring station conditions and surroundings.

2.4.1.2 Monitoring Condition Modification

Modifications to surface sampling station conditions may be required prior to each sampling event. These modifications may include surface and submerged debris removal, slightly deepening the location to allow sample container

immersion, or channeling/piping to consolidate local discharge. When modifications are required, sufficient time will be allowed for suspended solid settlement between the disturbance and sample collection. A four-hour minimum settling period prior to sampling will be observed.

2.4.2 Sample Collection

2.4.2.1 Collection Procedure

Surface water samples will be obtained from areas of minimal turbulence and aeration. Samples will be collected if flowing water is observed during the sampling event. New powder-free, surgical gloves will be donned prior to sample collection. The following procedure will be implemented regarding surface water sampling:

1. Put-on new powder-free surgical gloves.

2. Hold the bottle by the bottom with one hand and remove the cap with the other.

3. Push the sample container slowly into the water and tilt up toward the current to fill. A water depth of six inches is generally satisfactory. The sampler will avoid breaching the surface or losing sample preservatives while filling the container.

4. If there is little current movement, the container should be moved slowly, in a lateral, side to side direction, with the mouth of the container pointing upstream.

2.4.2.2 Field Parameters

Temperature, pH, specific conductivity, and turbidity will be logged at the start of sampling as a measure of field conditions and check for groundwater stability over time. Temperature, pH, specific conductivity, and turbidity measurements will be recorded for surface water samples. Temperature, pH, conductivity, and turbidity meter calibration will be completed at the beginning of each sampling event, according to the manufacturers' specifications and consistent with Test Methods for Evaluating Solid Waste - Physical/Chemical Methods (SW-846).

2.4.2.3 Observation

Surface water samples will be collected and contained in the order of parameter volatilization sensitivity as follows:

- Volatile Organics and Volatile Inorganics;
- Extractable Organics, Petroleum Hydrocarbons, Aggregate Organics and Oil and Grease;
- Total Metals;
- Inorganic Nonmetallics, Physical /Aggregate Properties, Biologicals;
- Microbiologicals; and
- Measurements of pH, Temperature, DO, ORP, Conductivity, and Turbidity.

Surface water samples will be collected unfiltered. If future dissolved metal analysis is required, samples will be prepared by field filtration using a decontaminated peristaltic filtering pump (or equivalent) and a disposable 0.45 micron filter cartridge manufactured for this purpose.

Surface water samples will be collected from surface water monitoring points shown on the attached Figure 1. Samples will be collected directly from the station in the container that has been prepared for the preservation and storage of compatible parameters. Samples will be collected in a manner that assures minimum agitation. Additional blanks and duplicate samples will not be collected with the surface water samples.

2.4.2.4 Decontamination

Field meters which might contact surface water samples will be thoroughly decontaminated between stations by washing with non-phosphate soapy, de-ionized water and rinsed with isopropanol and organic-free water. Detailed equipment decontamination procedures are detailed in Section 2.3.1.3.

2.4.2.5 Sample Containers

Sample containers will be prepared and provided by the laboratory for each surface water sampling event. Each container's preparation and preservatives will be the same as those utilized for groundwater sampling and addressed previously in Section 2.3.4.8.

3.0 FIELD QA/QC PROGRAM

3.1 OVERVIEW

Field Quality Assurance/Quality Control (QA/QC) requires the routine collection and analysis of trip blanks to verify that the handling process has not affected the quality of the samples. Contaminants found in the trip blanks could be attributed to:

1. Interaction between the sample and the container;
2. Contaminated source water; or
3. A handling procedure that alters the sample.

3.2 BLANK SAMPLES

3.2.1 Trip Blanks

The laboratory will prepare a trip blank by filling sample bottles with laboratory grade distilled or deionized water. Trip blanks will be placed in bottles of the specific type required for the analyzed parameters from a bottle pack specifically assembled by the laboratory for each groundwater sampling event. Trip blanks will be transported with the empty bottle packs and remain in the coolers throughout the sampling event. The blanks will be analyzed for volatile and purgeable organics.

3.2.2 Equipment Blanks

For wells sampled with non-dedicated equipment, equipment blank samples will be collected at a rate of one sample per day. To collect a "field" or "equipment" blank, a bailer will be filled with non-organic (milli-Q) water. Handling the bailer in a manner identical to well sampling, the water is transferred into equipment blank sample collection jars for the specified analysis. These samples are packed and sent to the laboratory with the other samples.

3.3 BLANK CONCENTRATIONS

The concentration levels of contaminants found in the trip or equipment blanks will be reported but will not be used to immediately correct the groundwater data. In the event that elevated parameter concentrations are found in a blank, the analysis will be flagged for further evaluation and possible re-sampling.

3.4 FIELD INSTRUMENTS

Field instruments utilized to measure groundwater characteristics will be calibrated prior to entering the field and recalibrated in the field as required to insure accurate measurement for each sample. The specific conductivity and pH meter shall be recalibrated utilizing two prepared solutions of known concentration in the range of anticipated values (between 4 and 10). A permanent thermometer, calibrated against a National Bureau of Standards Certified thermometer, will be used for temperature meter calibration. Other field equipment should be calibrated at least daily using the manufacturer's recommended specifications.

4.0 SAMPLE PRESERVATION AND SHIPMENT

4.1 OVERVIEW

Sample preservation, shipment, and chain-of-custody procedures to be observed between sampling and laboratory analysis are presented in the following sections.

4.2 SAMPLE PRESERVATION

Pre-measured chemical preservatives will be provided by the analytical laboratory. Hydrochloric acid will be used as a chemical stabilizer and preservative for volatile and purgeable organic specimens. Nitric acid will be used as the preservative for samples for metals analysis.

4.3 STORAGE/TRANSPORT CONDITIONS

Proper storage and transport conditions must be maintained to preserve sample integrity between collection and analysis. Ice and chemical cold packs will be used to cool and preserve samples, as directed by the analytical laboratory. Samples will be maintained at a temperature of 4° C. Dry ice is not to be used. Samples will be packed and/or wrapped in plastic bubble wrap to inhibit breakage or accidental spills.

Chain-of-Custody control documents will be placed in a waterproof pouch and sealed inside the cooler with the samples for shipping. Tape and/or custody seals will be placed on the outside of the shipping coolers, in a manner to prevent and detect tampering with the samples.

4.4 SAMPLE DELIVERY

Samples will be delivered to the analytical laboratory within a reasonable period of time in person or using an overnight delivery service to insure hold times are not exceeded. If samples are not shipped the same day, the ice used to keep the samples cool will be replenished to maintain the required 4° C temperature. Shipment and sample receipt will be coordinated with the laboratory. Do NOT store or ship highly contaminated samples (concentrated wastes, free product, etc.) or samples suspected of containing high concentrations of contaminants in the same cooler or shipping container with other environmental samples.

4.5 CHAIN OF CUSTODY

Chain-of-Custody control will be maintained from sampling through analysis to prevent tampering with analytical specimens. Chain-of-Custody control procedures for samples consist of the following:

1. Chain-of-Custody will originate at the laboratory with the shipment of prepared sample bottles and a sealed trip blank. Identical container kits will be shipped by express carrier to the sampler or site or picked up at the laboratory in sealed coolers.

2. Upon receipt of the sample kit, the sampler will inventory the container kit and check its consistency with number and types of containers indicated in the Chain-of-Custody forms and required for the sampling event.

3. Labels for individual sample containers will be completed, indicating the site, sampling time, sampling date, sample location/well number and preservation methods used for the sample (if any).

4. Collected specimens will be placed in ice filled coolers and will remain in the continuous possession of the field technician until shipment or transferal as documented by the Chain-of-Custody form has occurred. If continuous possession can not be maintained by the field technician, the coolers will be temporarily sealed and placed in a secure area.

5. Upon delivery to the laboratory, samples will be given laboratory sample numbers and recorded into a logbook indicating client, well number and delivery date and time. The laboratory director or his designee will sign the Chain-of-Custody control forms to formally receive the samples. The field technician, project manager and the laboratory director will work together to ensure that proper refrigeration of the samples is maintained.

6. Complete Chain-of-Custody form copies will be placed in the laboratory's analytical project file and attached to the laboratory analysis report upon completion.

Chain-of-Custody forms will be used to transfer direct deliveries from the sampler to the laboratory. A coded, express delivery shipping bill shall constitute the Chain-of Custody between the sampler and laboratory for overnight courier deliveries.

5.0 LABORATORY ANALYSIS

5.1 OVERVIEW

The ground and surface water parameters will be analyzed for field indicators of water quality (pH, conductivity, temperature, and turbidity) and those constituents listed in Table 1. Analytical methods from Test Methods For Evaluating Solid Waste - Physical/Chemical Methods (SW-846) or Methods For the Chemical Analysis of Water and Wastes will be used and be consistent with the Division of Waste Management's policies regarding analytical methods and reporting limits. Analysis will be performed by a laboratory certified by the North Carolina DENR for the analyzed parameters.

5.2 LABORATORY QUALITY ASSURANCE/QUALITY CONTROL

Formal environmental laboratory Quality Assurance/Quality Control (QA/QC) procedures are to be utilized throughout the event. The landfill owner/operator is responsible for selecting a laboratory contractor and ensuring that laboratory is utilizing proper QA/QC procedures. The laboratory must have a QA/QC program based on specific routine procedures outlined in a written laboratory Quality Assurance/Quality Control Manual. The QA/QC procedures listed in the manual shall provide the lab with the necessary assurances and documentation that accuracy and precision goals are achieved in analytical determinations. Internal quality control checks will be undertaken regularly by the lab to assess the precision and accuracy of analytical procedures.

5.3 LABORATORY QUALITY CONTROL CHECKS

The internal quality control checks include the use of calibration standards, standard references, duplicate samples and spiked or fortified samples. Calibration standards will be verified against a standard reference obtained from a second (alternate) source. For most analytical methods calibration curves shall be developed using at least one blank and three standards. Samples will be diluted, if necessary, to ensure that analytical measurements fall within the linear portion of the calibration curve. Where required, duplicate samples shall be processed at an average frequency of 10 percent to assess the precision of testing methods, and standard references shall be processed not less than monthly to assess the accuracy of analytical procedures. Method or procedural blanks and spiked or fortified samples shall be carried through all stages of sample preparation and measurement to validate the efficiency and accuracy of the analysis.

5.4 DATA REVIEW

During the analyses, quality control and sample data shall be reviewed by the laboratory manager to identify questionable data and determine if the necessary QA/QC requirements are being followed. If a portion of the lab work is subcontracted, it is the responsibility of the contracted laboratory to verify that the subcontracted work is performed by certified laboratories, using identical QA/QC procedures.

6.0 RECORD KEEPING AND REPORTING

6.1 OVERVIEW

This section addresses documentation and reporting requirements associated with the WQMP implementation.

6.1 FIELD LOGBOOK

The field technician will keep an up-to-date logbook documenting important information pertaining to the technician's field activities. The field logbook will document the following:

- Site Name and Location;
- Date and Time of Sampling;
- Climatic Conditions During Sampling Event;
- Sampling Point/Well Identification Number;
- Well Static Water Level;
- Height of Water Column in Well;
- Purged Water Volume and Well Yield (High or Low);
- Presence of Immiscible Layers and Detection Method;
- Observations on Purging and Sampling Event;
- Sample Collection Time;
- Temperature, pH, Temperature, DO, ORP, Turbidity and Conductivity Readings;
- Field Technician Signature;
- Relative stream water level ;
- Surface water clarity; and
- Changes in surface monitoring station conditions and surroundings.

6.2 GROUNDWATER SYSTEM EVALUATIONS

After each monitoring event, the potentiometric surface will be evaluated to determine whether the monitoring system remains adequate and to determine the rate and direction of groundwater flow at the site. The direction of groundwater flow will be determined by a comparison of groundwater surface elevations across the site through the construction of a potentiometric surface map. Groundwater flow rate will be determined using the following equation:

$$V = KI/n$$

Where: V = Velocity (feet/day)
K = Hydraulic Conductivity (feet/day)
I = Hydraulic Gradient (foot/foot)
n = Effective Porosity of aquifer soils (unit less)

If evaluation indicates the groundwater monitoring network is insufficient in meeting the rule requirements, the monitoring network will be modified accordingly and a work plan will be submitted to NCDENR for review prior to modifications to enhance the monitoring system.

6.3 RESULT REPORTING

Laboratory analytical data will be forwarded to the DWM within 60 calendar days of the receipt. The analytical data submitted will specify the sample collection date, the sampling point identification and include a sampling location map. Should a significant concentration of contaminants be detected in ground and surface water, as defined in North Carolina Solid Waste Rules, Groundwater Quality Standards, or Surface Water Quality Standards, the County will notify the DWM and will place a notice in the landfill records as to which constituents were detected.

Monitoring reports will be submitted with the following:

1. A potentiometric surface evaluation
2. Analytical laboratory reports and summary tables
3. A Solid Waste Environmental Monitoring Data Form (included in **Appendix A**)
4. Laboratory Data submitted in accordance with the Electronic Data Deliverable Template.

Monitoring reports may be submitted electronically by e-mail or in paper copy form. Copies of laboratory results and water quality reports for the Johnston County Landfill will be kept at the landfill office. Reports summarizing groundwater quality results and data evaluation will be submitted to the Division of Waste Management for each sampling event. Depending on the analytical results received, graphical analyses may be performed to evaluate plume movement and contaminant trends over time.

7.0 MONITORING PROGRAM MODIFICATIONS

7.1 OVERVIEW

This section addresses the procedures that should be followed with respect to water quality program modifications.

7.2 WELL ABANDONMENT/REHABILITATION

After each groundwater monitoring event, the potentiometric surface will be evaluated to determine whether the monitoring system remains adequate and to determine the rate and direction of groundwater flow at the site.

Should wells become irreversibly damaged or require rehabilitation, the DWM) will be notified. If monitoring wells and/or piezometers are damaged irreversibly they will be abandoned under the direction of the DWM. The abandonment procedure in unconsolidated materials will consist of over-drilling and/or pulling the well casing and plugging the well with an impermeable, chemically-inert sealant such as neat cement grout and/or bentonite clay. For bedrock well completions the abandonment will consist of plugging the interior well riser and screen with an impermeable neat cement grout and/or bentonite clay sealant.

7.3 ADDITIONAL WELL INSTALLATIONS

Additional well installations will be carried out in accordance with DWM directives. If the potentiometric maps reveal that the depth, location, or number of wells is insufficient to monitor potential releases of solid waste constituents from the landfill units, new well locations and depths will be submitted to the DWM for approval.

Monitoring wells will be installed under the supervision of a geologist or engineer who is registered in North Carolina and who will certify to the DWM that the installation complies with the North Carolina Regulations. Following installation, the documentation for the well construction will be submitted by the registered geologist or engineer within 30 days.

7.4 IMPLEMENTATION SCHEDULE

This Monitoring Program will be implemented with the approval of this Water Quality Monitoring Plan.

Figures

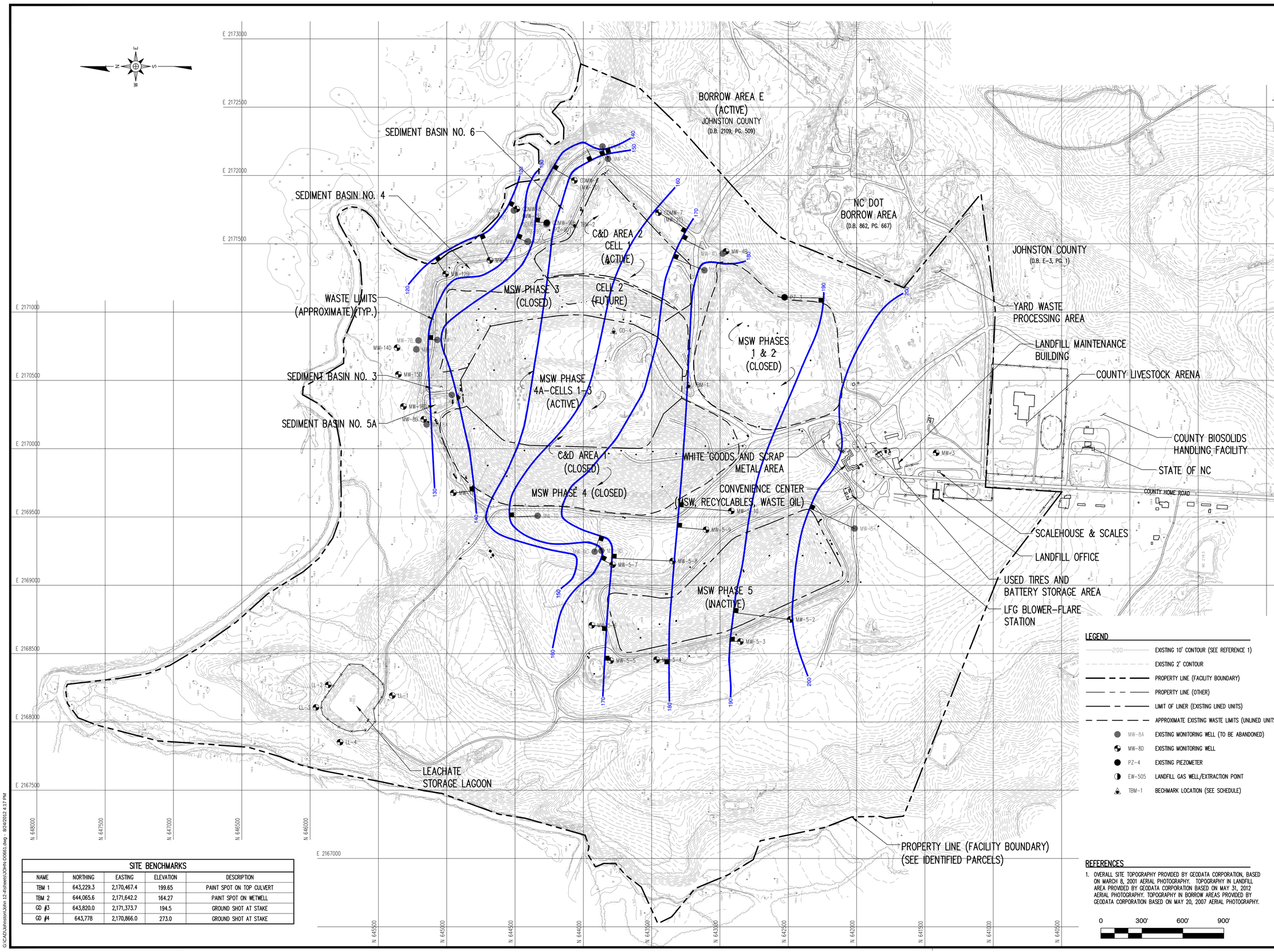

LEGEND

- 200 — EXISTING 10' CONTOUR (SEE REFERENCE 1)
- EXISTING 2' CONTOUR
- PROPERTY LINE (FACILITY BOUNDARY)
- PROPERTY LINE (OTHER)
- LIMIT OF LINER (EXISTING LINED UNITS)
- APPROXIMATE EXISTING WASTE LIMITS (UNLINED UNITS)
- MW-8A — EXISTING MONITORING WELL (TO BE ABANDONED)
- MW-8D — EXISTING MONITORING WELL
- PZ-4 — EXISTING PIEZOMETER
- EW-505 — LANDFILL GAS WELL/EXTRACTION POINT
- TBM-1 — BECHMARK LOCATION (SEE SCHEDULE)

REFERENCES

1. OVERALL SITE TOPOGRAPHY PROVIDED BY GEODATA CORPORATION, BASED ON MARCH 8, 2001 AERIAL PHOTOGRAPHY. TOPOGRAPHY IN LANDFILL AREA PROVIDED BY GEODATA CORPORATION BASED ON MAY 31, 2012 AERIAL PHOTOGRAPHY. TOPOGRAPHY IN BORROW AREAS PROVIDED BY GEODATA CORPORATION BASED ON MAY 20, 2007 AERIAL PHOTOGRAPHY.

0 300' 600' 900'

SITE BENCHMARKS

NAME	NORTHING	EASTING	ELEVATION	DESCRIPTION
TBM 1	643,229.3	2,170,467.4	199.65	PAINT SPOT ON TOP CULVERT
TBM 2	644,065.6	2,171,642.2	164.27	PAINT SPOT ON WETWELL
GD #3	643,820.0	2,171,373.7	194.5	GROUND SHOT AT STAKE
GD #4	643,778	2,170,866.0	273.0	GROUND SHOT AT STAKE

PREPARED FOR:

**JOHNSTON COUNTY
NORTH CAROLINA
DEPARTMENT OF
PUBLIC UTILITIES**

PREPARED BY:

NC LIC. NO. C-0828 (ENGINEERING)

SMITH+ GARDNER
ENGINEERS
14 N. Boylan Avenue, Raleigh NC 27603 | 919.828.0577

SEAL

SEAL

REV.	DATE	DESCRIPTION

PROJECT TITLE:

JOHNSTON COUNTY LANDFILL

DRAWING TITLE:

**WATER QUALITY
MONITORING NETWORK**

DESIGNED: J.A.S.	PROJECT NO: JOHN 12-4
DRAWN: C.T.J.	SCALE: AS SHOWN
APPROVED:	DATE: AUG. 2012
FILENAME: JOHN-D0661	
SHEET NUMBER:	DRAWING NUMBER: FIG.1

C:\C-CAD\Johnston\John 12-4\sheets\JOHN-D0661.dwg - 8/24/2012 4:17 PM

Tables

Table 1
Johnston CountyLandfill Facility
Monitoring Network

Well	Location	Parameters Sampled	Sampling Frequency
CDMW-2	Down/Cross-gradient	Appendix I+Metals + C&D +Field	Semi-annual
CDMW-4	Down-gradient	Appendix I+Metals + C&D +Field	Annual
CDMW-6	Down-gradient	Appendix I+Metals + C&D +Field	Annual
CDMW-7	Down/Cross-gradient	Appendix I+Metals + C&D +Field	Annual
CDMW-8	Down-gradient	Appendix I+Metals + C&D +Field	Annual
CDMW-9D	Down-gradient	Appendix I+Metals + C&D +Field	Semi-annual
MW-3	Up-gradient	Appendix I+Metals + Field	Semi-annual
MW-4B	Up/Cross-gradient	Appendix I+Metals + Field	Semi-annual
MW-6	Down-gradient	Appendix I+Metals + Field	Annual
MW-8D	Down-gradient	Appendix I+Metals + Field	Semi-annual
MW-11	Down-gradient	Appendix I+Metals + Field	Semi-annual
MW-12B	Down-gradient	Appendix I+Metals + Field	Semi-annual
MW-14D	Down-gradient	Appendix I+Metals + Field	Annual
MW-15D	Down-gradient	Appendix I+Metals + Field	Annual
MW-16D	Down-gradient	Appendix I+Metals + Field	Annual
MW5-2	Up/Cross-gradient	Appendix I+Metals + Field	Semi-annual
MW5-3	Down-gradient	Appendix I+Metals + Field	Annual
MW5-4	Down-gradient	Appendix I+Metals + Field	Annual
MW5-5	Down-gradient	Appendix I+Metals + Field	Annual
MW5-6	Down-gradient	Appendix I+Metals + Field	Semi-annual
MW5-7	Down-gradient	Appendix I+Metals + Field	Annual
MW5-8	Down-gradient	Appendix I+Metals + Field	Semi-annual
MW5-9	Down-gradient	Appendix I+Metals + Field	Annual
MW5-10	Down-gradient	Appendix I+Metals + Field	Annual
PZ-3	Up/Cross-gradient	Appendix I+Metals + Field	Semi-annual
leachate lagoon #1	Upgradient	Appendix I+Metals + Field	Annual
leachate lagoon #2	Downgradient	Appendix I+Metals + Field	Annual
leachate lagoon #3	Downgradient	Appendix I+Metals + Field	Annual
leachate lagoon #4	Downgradient	Appendix I+Metals + Field	Annual
	Downgradient	Appendix I+Metals + Field	Annual

Surface Water Sampling Locations

SW-1	Upgradient	Appendix I+Metals + Field	Semi-annual
SW-2	Downgradient	Appendix I+Metals + Field	Semi-annual
SW-5-1	Upgradient	Appendix I+Metals + Field	Semi-annual
SW-5-2	Downgradient	Appendix I+Metals + Field	Semi-annual

Leachate Sampling Locations

C&D Landfill Leachate	Appendix I+Metals + Field + Leachate	Semi-annual
Phase 5 Landfill Leachate	Appendix I+Metals + Field + Leachate	Semi-annual
Phase 4A Landfill Leachate	Appendix I+Metals + Field + Leachate	Semi-annual
Phase 4A Leak Detection Zone	Appendix I+Metals + Field + Leachate	Semi-annual

Appendix I = Full Appendix I List
Metals = Appendix I inorganic Parameters
Field = Temperature, pH, Conductivity
Leachate = required Leachate Parameters
C&D = required C&D indicator parameters

Table 2
Analytical Parameters
Johnston County Landfill Facility

Appendix I Constituents	Synonyms
Antimony	
Arsenic	
Barium	
Beryllium	
Cadmium	
Chromium	
Cobalt	
Copper	
Lead	
Nickel	
Selenium	
Silver	
Thallium	
Vanadium	
Zinc	
Temperature	
pH	
Turbidity	
Specific Conductance	
Acetone	2-Propanone
Acrylonitrile	2-Propenenitrile
Benzene	
Bromochloromethane	Chlorobromomethane
Bromodichloromethane	Dibromochloromethane
Bromoform	Tribromomethane
Carbon Disulfide	
Carbon Tetrachloride	Tetrachloromethane
Chlorobenzene	
Chloroethane	Ethyl chloride
Chloroform	Trichloromethane
Dibromochloromethane	Chlorodibromomethane
1,2-Dibromo-3-chloropropane	DBCP
1,2-Dibromoethane	Ethylene dibromide, EDB
1,2-Dichlorobenzene	o-Dichlorobenzene
1,4-Dichlorobenzene	p-Dichlorobenzene
trans-1,4-Dichloro-2-butene	
1,1-Dichloroethane	Ethyldidene chloride
1,2-Dichloroethane	Ethylene dichloride
1,1-Dichloroethylene	Vinylidene chloride
cis-1,2-Dichloroethylene	
trans-1,2-Dichloroethylene	
1,2-Dichloropropane	Propylene dichloride
cis-1,3-Dichloropropene	
trans-1,3-Dichloropropene	
Ethylbenzene	
2-Hexanone	Methyl butyl ketone
Methyl bromide	Bromomethane
Methyl chloride	Chloromethane
Methyl ethyl ketone	2-Butanone
Methyl iodide	Iodomethane
4-Methyl-2-pentanone	Methyl isobutyl ketone
Methylene bromide	Dibromomethane
Methylene chloride	Dichloromethane
Styrene	Ethenylbenzene
1,1,1,2-Tetrachloroethane	
1,1,2,2-Tetrachloroethane	
Tetrachloroethylene	Perchloroethylene
Toluene	Methyl benzene
1,1,1-Trichloroethane	Methyl chloroform
1,1,2-Trichloroethane	
Trichloroethylene	
Trichloroflouromethane	CFC-11
1,2,3-Trichloropropane	
Vinyl acetate	Acetic acid, ethenyl ester
Vinyl chloride	Choroethene
Xylenes	Dimethyl benzene
C&D Landfill Additional Parameters:	
Mercury	
Chloride	
Manganese	
Sulfate	
Iron	
Alkalinity	
Total Dissolved Solids	
Tetrahydrofuran	
Leachate Additional Parameters:	
BOD	
COD	
phosphate	
nitrate	
sulfate	

Appendix A

DENR USE ONLY: ☐ Paper Report ☐ Electronic Data - Email CD (data loaded: Yes / No) Doc/Event #:

NC DENR
Division of Waste Management - Solid Waste

Environmental Monitoring Reporting Form

Notice: This form and any information attached to it are "Public Records" as defined in NC General Statute 132-1. As such, these documents are available for inspection and examination by any person upon request (NC General Statute 132-6).

Instructions:

- **Prepare one form for each individually monitored unit.**
- **Please type or print legibly.**
- Attach a notification table with values that attain or exceed NC 2L groundwater standards or NC 2B surface water standards. The notification must include a preliminary analysis of the cause and significance of each value. (e.g. naturally occurring, off-site source, pre-existing condition, etc.).
- Attach a notification table of any groundwater or surface water values that equal or exceed the reporting limits.
- Attach a notification table of any methane gas values that attain or exceed explosive gas levels. This includes any structures on or nearby the facility (NCAC 13B .1629 (4)(a)(i).
- Send the original signed and sealed form, any tables, and Electronic Data Deliverable to: Compliance Unit, NCDENR-DWM, Solid Waste Section, 1646 Mail Service Center, Raleigh, NC 27699-1646.

Solid Waste Monitoring Data Submittal Information

Name of entity submitting data (laboratory, consultant, facility owner):

Contact for questions about data formatting. Include data preparer's name, telephone number and E-mail address:

Name: _____ Phone: _____

E-mail: _____

Facility name:	Facility Address:	Facility Permit #	NC Landfill Rule: (.0500 or .1600)	Actual sampling dates (e.g., October 20-24, 2006)

Environmental Status: (Check all that apply)

☐ Initial/Background Monitoring ☐ Detection Monitoring ☐ Assessment Monitoring ☐ Corrective Action

Type of data submitted: (Check all that apply)

☐ Groundwater monitoring data from monitoring wells
☐ Groundwater monitoring data from private water supply wells
☐ Leachate monitoring data
☐ Surface water monitoring data
☐ Methane gas monitoring data
☐ Corrective action data (specify) _____
☐ Other(specify) _____

Notification attached?

☐ No. No groundwater or surface water standards were exceeded.
☐ Yes, a notification of values exceeding a groundwater or surface water standard is attached. It includes a list of groundwater and surface water monitoring points, dates, analytical values, NC 2L groundwater standard, NC 2B surface water standard or NC Solid Waste GWPS and preliminary analysis of the cause and significance of any concentration.
☐ Yes, a notification of values exceeding an explosive methane gas limit is attached. It includes the methane monitoring points, dates, sample values and explosive methane gas limits.

Certification

To the best of my knowledge, the information reported and statements made on this data submittal and attachments are true and correct. Furthermore, I have attached complete notification of any sampling values meeting or exceeding groundwater standards or explosive gas levels, and a preliminary analysis of the cause and significance of concentrations exceeding groundwater standards. I am aware that there are significant penalties for making any false statement, representation, or certification including the possibility of a fine and imprisonment.

Facility Representative Name (Print) Title (Area Code) Telephone Number

Affix NC Licensed/ Professional Geologist Seal

Signature Date

Facility Representative Address

NC PE Firm License Number (if applicable effective May 1, 2009)

Revised 6/2009

Attachment F

Landfill Gas Monitoring Plan

Permit Amendment Application
Johnston County C&D Landfill – Area 2 (Permit No. 51-03)

Landfill Gas Monitoring Plan

Johnston County Landfill Facility
Smithfield, North Carolina

Prepared for:
Johnston County Department of Public Utilities
Smithfield, North Carolina

Joan A. Smyth

8/24/12

NORTH CAROLINA LICENSED SEAL 1369 GEOLOGIST JOAN A. SMYTH

Joan A. Smyth, P.G
Senior Hydrogeologist

August 2012

NC LIC. NO. C-0829 (ENGINEERING)

SMITH+GARDNER

14 N. Boylan Avenue, Raleigh NC 27603 | 919.828.0577

PRINTED ON 100% RECYCLED PAPER

JOHNSTON COUNTY MSW AND C&D LANDFILLS
NC SOLID WASTE PERMIT NO. 51-03

LANDFILL GAS MONITORING PLAN
Table of Contents

1.0 INTRODUCTION 1
1.1 Project Description 1
1.2 Contact Information 1
1.2.1 Owner 1
1.2.2 Engineer 2
1.2.3 NCDENR 2
1.3 Existing Site Conditions 2
1.3.1 Topography 2
1.3.2 Adjacent Areas 3
1.3.3 Site Geology 3
1.3.4 Local Groundwater Regime 3
2.0 MONITORING PROGRAM 4
2.1 Perimeter Monitoring Network 4
2.1.1 Existing Network 4
2.1.2 Site Features 4
2.1.3 Proposed Network 4
2.1.4 Well Placement Limitations 4
2.1.5 LFG Monitoring Well Construction 5
2.2 Monitoring and Reporting 5
2.2.1 Frequency 5
2.2.2 Personnel 5
2.2.3 Equipment 5
2.2.4 Procedures 5
2.2.5 Precautionary Action Plan 6
2.2.6 Record Keeping 6
2.3 Maintenance 7
3.0 CONTINGENCY PLAN 8
3.1 Introduction 8
3.2 Compliance Action Plan 8
3.2.1 Immediate Action Plan 8
3.2.2 Reporting and Documentation 8
3.2.3 Remediation Plan 8

FIGURES

Figure 1 Site Vicinity Map
Figure 2 Site Plan

APPENDICES

Appendix A Landfill Gas Reporting Form and Environmental Data Reporting Form

1.0 INTRODUCTION

1.1 PROJECT DESCRIPTION

The Landfill Gas Monitoring Plan (Plan), prepared by Smith Gardner, Inc. (S+G), presents a comprehensive landfill gas (LFG) monitoring program for the Johnston County Landfill Facility (NC Solid Waste Permit 51-03); with the objective to provide clear guidelines and procedures for field personnel when monitoring for landfill gas in the subsurface. Note that this plan does not address landfill gas collection, or other air quality regulations that may apply to this site, subject to the new source performance standards (NSPS) of the Clean Air Amendment (CAA).

The proposed plan presents the rationale for the monitoring program as well as necessary actions required by the Owner to protect and safeguard the area surrounding the landfill and to satisfy North Carolina Solid Waste Management Rules [13B.1626(4) and 13B.0544(d)] for monitoring and controlling LFG; ensuring the measured concentration of methane gas does not exceed the lower explosive limit (LEL) at the facility boundary and 25 percent of the lower explosive limit for methane in facility structures. Landfill gas readings will be collected quarterly and results will be submitted to the Division of Waste Management (DWM) of the NCDENR (see **Section 1.2.3**) if levels exceed the designated limit at the property boundary.

Available site data, standard industry practices, experience, and judgment were utilized to develop this plan; however, the program may require modification and maintenance over time to accommodate changing landfill conditions, changing receptors in areas adjacent and around the landfill, or other conditions that cannot be fully anticipated. Maintenance suggestions are also provided to help identify secondary conditions that may require Plan updates. Facility conditions or unforeseen sampling variables that warrant deviation from standard procedure will conform to the NCDENR Landfill Gas Monitoring Document (Guidance Document)[1].

Uncontrolled LFG migration can result in loss of property, loss of life, injury, vegetative damage and intolerable odors. Landfill monitoring includes exposure to explosive gases. Operational and/or monitoring staff should be specifically trained in the management and response for situations such as fire or explosion, and possess and awareness of changing conditions around these sites.

1.2 CONTACT INFORMATION

In case of emergency, or if questions arise during implementation, please contact the following:

1.2.1 Owner

Johnston County
Johnston County Solid Waste Management Department
680 County Home Road
P.O. Box 2263
Smithfield, North Carolina 27577
Phone: (919) 938-4750
Mr. Rick Proctor, Solid Waste Manager
rick.proctor@johnstonnc.com

[1] NCDENR, Division of Waste Management, Solid Waste Section, Landfill Gas Monitoring Guidance, November 2010.

1.2.2 Engineer

Smith Gardner, Inc.
14 N. Boylan Avenue
Raleigh, North Carolina 27603
Phone: (919) 828-0577

Ms. Joan A. Smyth, P.G., Senior Hydrogeologist
email: joan@smithgardnerinc.com
Mr, Pieter K. Scheer P.E., Senior Engineer
Email: pieter@smithgardnerinc.com

1.2.3 NCDENR

North Carolina Department of Environment and Natural Resources
Division of Waste Management:

Raleigh Central Office (RCO)
217 W Jones Street
Raleigh, North Carolina 27603
Phone: (919) 707-8200

Fayetteville Regional Office (FRO)
225 Green Street, Suite 714
Fayetteville, North Carolina 28301
Phone: (910) 486-1541
Fax: (910) 486-0707

Division of Waste Management (DWM) – Solid Waste Section

Field Operations Branch Head:	Mark Poindexter (RCO)
Eastern District Supervisor:	Dennis Shackelford (FRO)
Waste Management Specialist:	Mary Whaley ((919) 693-5023)

1.3 EXISTING SITE CONDITIONS

The site is located approximately 5 miles east of Smithfield off Hwy 210 in Johnston County. The landfill facility includes unlined (closed) Phases 1 – 4, lined (active) Phase 4a, lined (inactive) Phase 5, the lined (active) C&D landfill, the offices and scalehouse. There are existing landfill gas monitoring wells and three passive landfill gas trenches located on-site. The site is primarily surrounded by undeveloped land. The site's location is shown on **Figure 1**, while details of the site are shown on **Figure 2**.

1.3.1 Topography

The site is located on the fall zone between the Coastal Plain and Piedmont physiographic provinces. Site topography ranges from 120 to 289 feet above mean sea level (fmsl) between the top of Phase 5 and Middle Creek to the north and northeast of the site. Original topography at

this site, based upon USGS topographic mapping, ranged from 120 to 240 fmsl with slopes grading toward Middle Creek to the north of the site, and toward the tributaries of Middle Creek to the east and west of the disposal areas.

The site is bounded by two streams, Middle Creek to the north, and an unnamed tributary of Middle Creek to the west. Additionally, Buzzard Branch (a.k.a Little Juniper Creek) is located east of the waste disposal units within the property line. Middle Creek is a perennial stream with a large flood plain along some portions of the site. Buzzard Branch and the unnamed tributary are smaller first and second order intermittent streams which lead to Middle Creek. The facility location is shown on **Figure 1**.

1.3.2 Adjacent Areas

The facility is located approximately five miles west of Smithfield, NC. Site access is from the NC-HWY 210 and County Home Road on the southern side of the facility. The site is primarily surrounded by woodlands, agricultural fields and some homes along Highway 210, and across Middle Creek. The site location and surrounding area are shown on **Figure 1**.

1.3.3 Site Geology

The site is located in the western portion of the Coastal Plain Province in the fall zone. The formations found in this area consist of sediments of Cretaceous and Tertiary age, unconformably overlying metamorphic rocks of Pre-Cambrian to Cambrian age. The site is underlain by sediments of the Middendorf Formation which were deposited largely in a deltaic system. According to Geology of the Carolinas (Horton/Zullo, 1991) the formation consists of unfossiliferous, interbedded, thin clay and sand. The stratigraphy tends to be very discontinuous, indicating that the sediment deposits are lenticular. Most of the sediments range from silty clay to a coarse clayey sand and gravel with thin lenses of dense clay. There are occasional concretions of iron oxide minerals which form very hard thin layers within the sand layers. The Middendorf Formation dips very gently to the east, and is underlain by highly weathered metamorphic rocks of the Carolina Slate Belt.

Borings advanced at the site encountered sandy silts consistent with the Middendorf Formation, and partially weathered rock above bedrock. The bedrock encountered was a metamorphosed mudstone. The depths of these borings ranged between 15 feet and 75 feet deep. The unconsolidated sediments consisted of mostly silty sands and sandy silts with some clayey sand as well. The metamudstone bedrock was encountered at a depth of approximately 15 feet in the floodplain around the site, and at a depth of approximately 50 feet elsewhere on-site. Diabase dikes have also been located at the site beneath the Area 2 C&D landfill unit, the floodplain of Middle Creek, and the Phase 5 MSW landfill unit.

1.3.4 Local Groundwater Regime

The uppermost aquifer at the site appears to exhibit mostly lateral flow with potentiometric surfaces that reflect a subdued expression of the surface topography. The uppermost aquifer at the site primarily consists of silty and clayey sands. Hydraulic conductivity values measured in the soil aquifer varies on the order of 0.0083 ft/day to 0.289 ft/day based upon prior investigations.

2.0 MONITORING PROGRAM

1.1 PERIMETER MONITORING NETWORK

2.1.1 Existing Network

The LFG monitoring network for the Johnston County Landfill includes five buildings (locations LFG-1 through LFG-5 and six existing LFG monitoring wells (LFG-6 through LFG-12)). Currently, LFG-7 is damaged and is not monitored. These monitoring locations are shown on **Figure 2**.

2.1.2 Site Features

The landfill property is bounded to the north by an Middle Creek and the east by Buzzard Branch, to the west by an unnamed tributary to Middle Creek and to the south by additional properties located on County Home Road and NC Hwy 210. The location of surface water bodies, as well as sensitive receptors must be considered when evaluating potential landfill gas monitoring points.

2.1.3 Proposed Network

The close location of streams to the north, east, and west of the site limit the possibility of landfill gas migration in these directions. There are several landfill gas monitoring wells that are located near these streams. Typically, in these areas groundwater is encountered at a depth of 5 feet below grade or less (based upon nearby groundwater monitoring wells). Based upon this, we proposal removal of five existing landfill gas monitoring wells (LFG-8 through LFG-12), due to their close proximity to Buzzard Branch, and the addition of one monitoring well closer to the new facility boundary. The proposed new well is located across the headwaters of Buzzard Branch, where the stream may be more ephemeral in nature. The proposed monitoring network (including building locations) is summarized below:

LFG Monitoring Point	Location	Notes
LFG-1	Old Dog Pound Facility	
LFG-2	Landfill Shed Structure	
LFG-3	Landfill Shop	
LFG-4	Landfill Offices	
LFG-5	Scalehouse	
LFG-6	S. of Unlined Landfills	
LFG-7	S. E. of Yard Waste Processing Area	Will Be Repaired/Replaced
LFG-8	East of Ph. 1 & 2	Adjacent to Buzzard Branch
LFG-9	East of Ph. 1 & 2	Adjacent to Buzzard Branch
LFG-10	East of Ph. 1 & 2	Adjacent to Buzzard Branch
LFG-11	East of Lined C&D	Near Buzzard Branch
LFG-12	NE of Phase 3	Adjacent to Middle Creek
LFG-8a	East of Ph. 1 & 2	Across Buzzard Branch Near Headwaters

The proposed monitoring wells are shown on **Figure 2**.

2.1.4 Well Placement Limitations

The LFG monitoring well locations were determined by the surrounding area condition, soil type, waste location and nearby water bodies.

2.1.5 LFG Monitoring Well Construction

The LFG monitoring wells were installed (ca1994) by C.T. Clayton and Associates and Patterson Exploration Drilling. Each monitoring well consists of a 1-inch in diameter PVC pipe with a screened section and solid riser pipe to the surface. Unfortunately, no well records for these wells could be located. Quick-connect fittings or stopcock valves will be installed in accordance with DWM guidance on the PVC portion of the well or in the cap as a monitoring port

The additional monitoring well will be installed to approximately the depth of groundwater. The well will be screened from the total well depth to 5 feet below grade. The well will be completed with a landfill gas monitoring well cap and outer steel casing.

2.2 MONITORING AND REPORTING

Monitoring and reporting of LFG gas concentrations shall be performed in accordance with guidance by the Division of Waste Management document "Methane Monitoring Guidance" (www.wastenotnc.org/swhome/met_mon.html) and as outlined below.

2.2.1 Frequency

LFG monitoring will be conducted quarterly to insure that landfill gas does not exceed the lower explosive limit (LEL) at the facility property boundary and 25% LEL at facility structures. Modifications to monitoring frequency can be obtained through the DWM.

If methane readings exceed the specified limits, protection of human health is the primary objective. Please follow the actions specified in **Section 2.2.4**.

2.2.2 Personnel

LFG monitoring will be performed by personnel trained in LFG hazards and explosive gas meter use. A designated landfill technician will be assigned to regular LFG monitoring duty.

2.2.3 Equipment

Johnston County will utilize a landfill gas instrument that meets the DWM Landfill Gas Monitoring Guidance requirements for methane, oxygen and carbon dioxide. Calibration will occur prior to instrument use and in compliance with manufacturer's specifications.

2.2.4 Procedures

Prior to each monitoring event, portable methane field instruments will be calibrated with a known calibration standard in accordance with manufacturer's recommendations. The equipment used in the calibration procedure and results for each sampling event will be indicated on the landfill gas sampling data sheet and will be included in the sampling report. An example data form is provided in **Appendix A**.

The following steps outline the procedure for the LFG well monitoring:

- Check calibration date on the meter and calibrate according to manufacturer's instructions; allowing equipment to warm up properly, prior to use, per manufacturer's direction.
- Purge sample tube for one minute before sampling.
- Connect instrument tubing to sample port on the monitoring well without removing the cap.

- Open the valve and record the stabilized reading. A stabilized reading will not vary more than 0.5 percent by volume on the instrument's scale. Recorded readings will include the oxygen concentration, at two percent per volume or less to indicate air is not being drawn into the system providing false readings, and barometric pressure.
- Record data on the monitoring log form provided in **Appendix A.**
- Turn off the valve and disconnect the tubing.
- If less than 50% LEL, move to next LFG monitoring well.

If deviation from the prescribed plan is warranted, sample integrity and adherence to the Guidance Document will be priority. Modifications will be noted on the sampling log.

If explosive gas concentrations **equal to or greater than 50%** of the LEL in a LFG monitoring well, personnel should implement the Precautionary Action Plan located in **Section 2.2.5**.

IF EXPLOSIVE GAS CONCENTRATIONS ARE EQUAL TO OR GREATER THAN 100% OF THE LEL IN A LFG MONITORING WELL, THE FOLLOWING ACTIONS WILL BE IMPLEMENTED BY PERSONNEL:

(1) Recalibrate monitoring equipment and confirm results.
(2) If results are confirmed, **IMMEDIATELY** contact the Solid Waste Manager.
(3) Implement the Compliance Action Plan located in **Section 3.2**.

IF EXPLOSIVE GAS CONCENTRATIONS ARE EQUAL TO OR GREATER THAN 25% IN ON-SITE STRUCTURES, THE FOLLOWING ACTIONS WILL BE IMPLEMENTED BY PERSONNEL:

(1) **IMMEDIATELY** contact the Solid Waste Manager.
(2) **EVACUATE** the building and open windows.
(3) Recalibrate monitoring equipment and confirm results.
(4) If results are confirmed Implement the Compliance Action Plan located in **Section 3.2**.

2.2.5 Precautionary Action Plan

If explosive gas concentrations are **equal to or greater than 50%** of the LEL in a LFG monitoring well, personnel should perform the following additional steps at those locations:

- Measure gas pressure in the well head (in inches of water) using magnehelic gauge or other appropriate metering device.
- Record at least one additional gas concentration measurement, inside well just below the top of casing.
- Evaluate surrounding area for potential receptors to or signs of LFG migration. LFG can stress vegetation and can kill trees and grass by root asphyxiation. Note stressed/dead vegetation areas on the monitoring form.

Monitoring should be conducted in this manner for wells with concentrations equal to or greater than 50% LEL during monitoring events. Detailed procedure descriptions, actions performed, and relevant sampling information should be recorded, kept in the operating record, and reported to the Solid Waste Manager and Engineer for further evaluation.

2.2.6 Record Keeping

Readings will be documented on the LFG Monitoring Report form provided in **Appendix A**. The

LFG Monitoring Report Form will contain the facility name, permit number, type of landfill gas monitoring instrument used, instrument calibration date, landfill gas monitoring event date, sample collector name, instrument pump rate, ambient air temperature, and general weather conditions. For each well the sampler will record the well location or well identification, barometric pressure, time pumped (sec), time reading collected, % LEL, % methane by volume, % oxygen, % carbon dioxide, and notes, observations, and/or comments relative to the sampling event.

Completed forms will be reviewed and initialed by the County Solid Waste Manager following each monitoring event and placed in the landfill operating records. Landfill gas monitoring logs will remain on file in the landfill office at the Johnston County Landfill at 680 County Home Road Smithfield, NC. These readings should be available for review by NCDENR and EPA personnel on request. **If readings above 100% LEL are measured at the property boundary, a copy of the LFG monitoring form and an Environmental Data Reporting Form (Appendix A) shall be submitted to NCDENR with the implemented action**.

2.3 MAINTENANCE

Periodic maintenance and site observations will be conducted routinely to address monitoring program components. At a minimum, the following observations will be made during routine monitoring activities:

- Access to monitoring well and gas well locations.
- Landfill cover conditions, potential erosion areas, landfill seeps, odors, etc.
- Monitoring well maintenance: operational locks, steel casing, and concrete pad conditions, etc.

Note deficiencies on the monitoring forms and report to the Solid Waste Manager for repair or replacement as necessary.

3.0 CONTINGENCY PLAN

3.1 INTRODUCTION

In the event explosive gas concentrations exceed the DWM allowable limit (>100% LEL at the property boundary and/or 25% LEL in on-site structures), this contingency plan will be followed. The contingency plan includes the specific step by step actions that should be implemented to protect human health and the environment.

3.2 COMPLIANCE ACTION PLAN

If explosive gas concentrations **equal to or greater than 100% of the LEL in a LFG monitoring well, and/or 25% LEL in on-site structures**, the following actions will be enacted by Johnston County:

3.2.1 Immediate Action Plan

The Solid Waste Manager will ensure the protection of human health and safety as follows:

(1) Determine nearby potential receptors.
(2) If warranted, check the LFG concentrations in structures near the high LFG concentration well or structure.
(3) If the LFG concentration in structures is greater than 25% evacuate the area.
(4) Verbally notify the County Manager.
(5) If the well with the explosive gas concentration above 100% LEL is located at the property boundary, verbally notify the Division of Waste Management
(6) Investigate and identify the potential source(s) and conduit(s) for LFG migration that may have caused the excessive readings (i.e. the path that the LFG is taking to the monitoring location).
(7) Identify the extent of LFG migration using additional wells, bar hole punch sampling methodology or other applicable alternative method.
(8) As appropriate, begin remedy procedures to control LFG levels in building(s) surrounding the landfill site.

3.2.2 Reporting and Documentation

Following the **Immediate Action Plan**, within seven days the County will record the methane levels and a description of actions performed to protect human health in the operating record. Within sixty days a remediation plan, describing the nature and extent of the problem and proposed remedy, will be submitted to NCDENR and a copy will be kept in the operating record. Once approved, notification to the division the plan has been implemented will also be kept in the operating record.

3.2.3 Remediation Plan

In the event the prolonged explosive gas concentrations exist and as identified during the **Immediate Action Plan**, the County will prepare and implement a Remediation Plan to mitigate landfill gas migration off property. Extensions may be granted by the Division of Waste Management on written request and depending on severity of the situation.

Figures

G:\CAD\Johnston\John 12-4\sheets\JOHN-B0660.dwg - 8/24/2012 11:15 AM

PREPARED FOR:

JOHNSTON COUNTY LANDFILL
SMITHFIELD, NORTH CAROLINA
AERIAL PHOTOGRAPHY

DRAWN:	APPROVED:	SCALE:	FIGURE NO.
JAL	JAS	AS SHOWN	1

DATE:	PROJECT NO:	FILENAME:
Aug 2012	JOHN 12-4	JOHN-B0660

PREPARED BY:

NC LIC. NO. C-0828 (ENGINEERING)

SMITH+GARDNER

14 N. Boylan Avenue, Raleigh NC 27603 | 919.828.0577

LEGEND

———	PROPERTY LINE (SHOWN WHITE ON MAP)
— — —	ADJACENT PROPERTY LINES (SHOWN WHITE ON MAP)
— — —	PHASE BOUNDARY
LFG-6	EXISTING LANDFILL GAS WELL (APPROXIMATE LOCATION)
LFG-10	PROPOSED FOR ABANDONMENT
LFG-8A	PROPOSED LFG WELL
	PASSIVE VENT TRENCH

NOTE

1. LFG-7 IS CURRENTLY DAMAGED AND NOT MONITORED.
2. LFG-1 THROUGH LFG-5 REPRESENT BUILDINGS NEXT TO EACH LABEL.

REFERENCES

1. AERIAL PHOTOGRAPHY PROVIDED BY GEODATA CORP. ON MAY 31, 2012.
2. PROPERTY LINE SURVEY PERFORMED BY JERRY BALL LAND SURVEYING, P.C. DATED AUGUST 21, 2012.

G:\CAD\Johnston\John 12-4\sheets\JOHN-B0658.dwg - 8/23/2012 5:48 PM

PREPARED BY:

NC LIC. NO. C-0828 (ENGINEERING)

SMITH+GARDNER

14 N. Boylan Avenue, Raleigh NC 27603 | 919.828.0577

DRAWN:	APPROVED:	SCALE:	FIGURE NO.
JAL	JAS	AS SHOWN	2

DATE:	PROJECT NO:	FILENAME:
Aug 2012	JOHN 12-4	JOHN-B0658

PREPARED FOR:

JOHNSTON COUNTY LANDFILL
SMITHFIELD, NORTH CAROLINA
EXISTING LANDFILL GAS MONITORING NETWORK

Appendix A

NC Division of Waste Management - Solid Waste Section

Landfill Gas Monitoring Data Form

Notice: This form and any information attached to it are "Public Records" as defined in NC General Statute 132-1. As such, these documents are available for inspection and examination by any person upon request (NC General Statute 132-6).

Facility Name: _____ Permit Number: _____

Date of Sampling: _____ NC Landfill Rule (.0500 or .1600): _____

Name and Position of Sample Collector: _____

Type and Serial Number of Gas Meter: _____ Calibration Date of Gas Meter: _____

Date and Time of Field Calibration: _____

Type of Field Calibration Gas (15/15 or 35/50): _____ Expiration Date of Field Calibration Gas Canister: _____

Pump Rate of Gas Meter: _____

Ambient Air Temperature: _____ Barometric Pressure: _____ General Weather Conditions: _____

Instructions: Under "Location or LFG Well" identify the monitoring wells or describe the location for other tests (e.g., inside buildings). A drawing showing the location of test must be attached. Report methane readings in both % LEL and % methane by volume. A reading in percent methane by volume can be converted to % LEL as follows: % methane by volume = % LEL/20

Location or LFG Well ID	Sample Tube Purge	Time	Time Pumped (s)	Initial %LEL	Stabilized %LEL	%CH4 by Volume	%O2	%CO2	Notes

If your facility has more gas monitoring locations than there is room on this form, please attach additional sheets listing the same information as contained on this form.

Certification
To the best of my knowledge, the information reported and statements made on this data submittal and attachments are true and correct. I am aware that there are significant penalties for making any false statement, representation, or certification including the possibility of a fine and imprisonment.

_____ _____
SIGNATURE TITLE

DENR USE ONLY: ☐ Paper Report ☐ Electronic Data - Email CD (data loaded: Yes / No) Doc/Event #:

NC DENR
Division of Waste Management - Solid Waste

Environmental Monitoring Reporting Form

Notice: This form and any information attached to it are "Public Records" as defined in NC General Statute 132-1. As such, these documents are available for inspection and examination by any person upon request (NC General Statute 132-6).

Instructions:

- **Prepare one form for each individually monitored unit.**
- **Please type or print legibly.**
- Attach a notification table with values that attain or exceed NC 2L groundwater standards or NC 2B surface water standards. The notification must include a preliminary analysis of the cause and significance of each value. (e.g. naturally occurring, off-site source, pre-existing condition, etc.).
- Attach a notification table of any groundwater or surface water values that equal or exceed the reporting limits.
- Attach a notification table of any methane gas values that attain or exceed explosive gas levels. This includes any structures on or nearby the facility (NCAC 13B .1629 (4)(a)(i).
- Send the original signed and sealed form, any tables, and Electronic Data Deliverable to: Compliance Unit, NCDENR-DWM, Solid Waste Section, 1646 Mail Service Center, Raleigh, NC 27699-1646.

Solid Waste Monitoring Data Submittal Information

Name of entity submitting data (laboratory, consultant, facility owner):

Contact for questions about data formatting. Include data preparer's name, telephone number and E-mail address:

Name: _____ Phone: _____

E-mail: _____

Facility name:	Facility Address:	Facility Permit #	NC Landfill Rule: (.0500 or .1600)	Actual sampling dates (e.g., October 20-24, 2006)

Environmental Status: (Check all that apply)

☐ Initial/Background Monitoring ☐ Detection Monitoring ☐ Assessment Monitoring ☐ Corrective Action

Type of data submitted: (Check all that apply)

☐ Groundwater monitoring data from monitoring wells
☐ Groundwater monitoring data from private water supply wells
☐ Leachate monitoring data
☐ Surface water monitoring data
☐ Methane gas monitoring data
☐ Corrective action data (specify) _____
☐ Other(specify) _____

Notification attached?

☐ No. No groundwater or surface water standards were exceeded.
☐ Yes, a notification of values exceeding a groundwater or surface water standard is attached. It includes a list of groundwater and surface water monitoring points, dates, analytical values, NC 2L groundwater standard, NC 2B surface water standard or NC Solid Waste GWPS and preliminary analysis of the cause and significance of any concentration.
☐ Yes, a notification of values exceeding an explosive methane gas limit is attached. It includes the methane monitoring points, dates, sample values and explosive methane gas limits.

Certification

To the best of my knowledge, the information reported and statements made on this data submittal and attachments are true and correct. Furthermore, I have attached complete notification of any sampling values meeting or exceeding groundwater standards or explosive gas levels, and a preliminary analysis of the cause and significance of concentrations exceeding groundwater standards. I am aware that there are significant penalties for making any false statement, representation, or certification including the possibility of a fine and imprisonment.

Facility Representative Name (Print) Title (Area Code) Telephone Number

Affix NC Licensed/ Professional Geologist Seal

Signature Date

Facility Representative Address

NC PE Firm License Number (if applicable effective May 1, 2009)

Revised 6/2009