SW-11-024-18 4702T 19940913 P-0

Permit:	47-02T
Name:	Raeford Transfer Station
County:	Hoke
Shipped Date:	
Box:	SW-11-024
Document Type:	Other (O)
Document Date:	9/13/1994
Division:	Waste Management (WM)
Sub-Division:	Solid Waste (SW)
Document Category:	Facility (F)
Document Group:	Authorization or Permit (P)
Description:	Map: . Maps in Roll: 7

47-02T Permit No.

1994

RAEFORD TRANSFER STATION
RAEFORD LANDFILL
HOKE COUNTY, NORTH CAROLINA

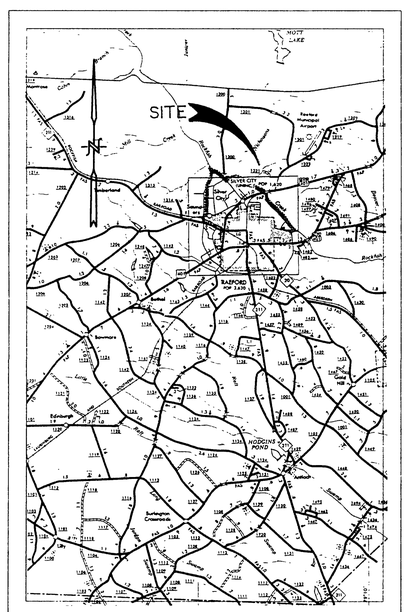

VICINITY MAP

INDEX:

1- EXISTING CONDITIONS
2- SITE AND OPERATIONAL PLAN
3- LAYOUT
4- GRADING, DRAINAGE, AND EROSION CONTROL
5- DETAILS
6- DETAILS

APPROVED
DIVISION OF SOLID WASTE MANAGEMENT
DATE 9/13/94 BY

RECEIVED
APR 21 1993
SOLID WASTE MANAGEMENT
FAYETTEVILLE REGIONAL OFFICE

Permit No. 47-02T

NORTH CAROLINA PROFESSIONAL SEAL 10614 ENGINEER CHARLES D. HEISER

HOBBS, UPCHURCH & ASSOCIATES, P.A.
CONSULTING ENGINEERS
SOUTHERN PINES, NORTH CAROLINA 28387

Raeford Transfer Station 9/13/94
47-02T Hoke County
47-02T

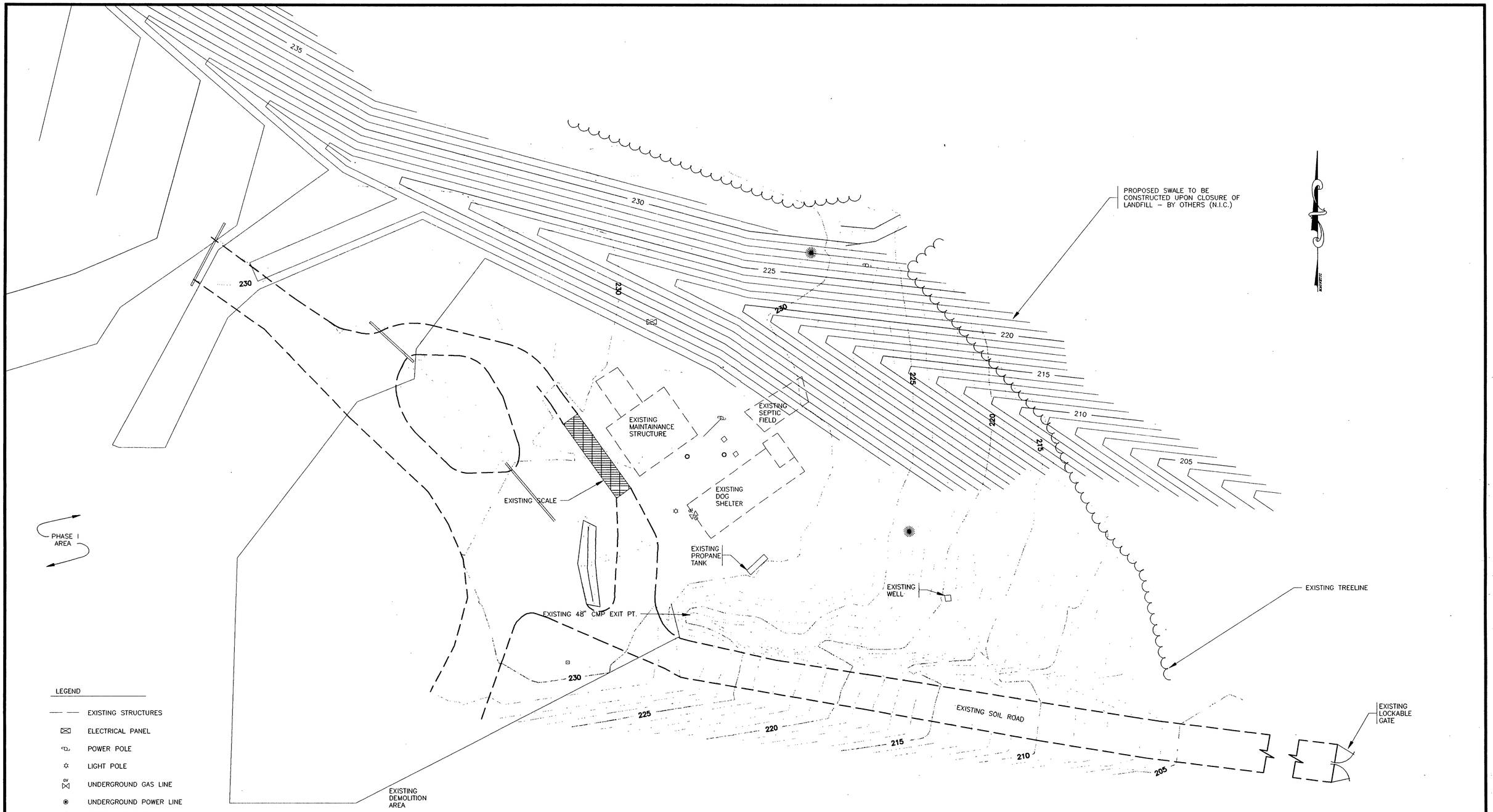

LEGEND

- EXISTING STRUCTURES
- ELECTRICAL PANEL
- POWER POLE
- LIGHT POLE
- UNDERGROUND GAS LINE
- UNDERGROUND POWER LINE
- SEPTIC CLEANOUT
- TELEPHONE PEDISTAL
- EXISTING TREE
- PROPOSED CONTOURS UPON LANDFILL CLOSURE BY OTHERS
- EXISTING CONTOURS

HOBBS, UPCHURCH & ASSOCIATES, P.A.
CONSULTING ENGINEERS
SOUTHERN PINES, NORTH CAROLINA 28387

NORTH CAROLINA PROFESSIONAL SEAL 10614 ENGINEER CHARLES D. HEISER

RAEFORD TRANSFER STATION
RAEFORD, NORTH CAROLINA

EXISTING CONDITIONS

DATE:	04-16-93
DESIGNED:	DWS
DRAWN:	GMN
CHECKED:	CDH
SCALE:	1"=30'
SHEET NO.	1 OF: 5

PROJECT # RA0302 FILE NAME: RA0302-1 DATE: 03-18-93 SCALE: 1" = 30'

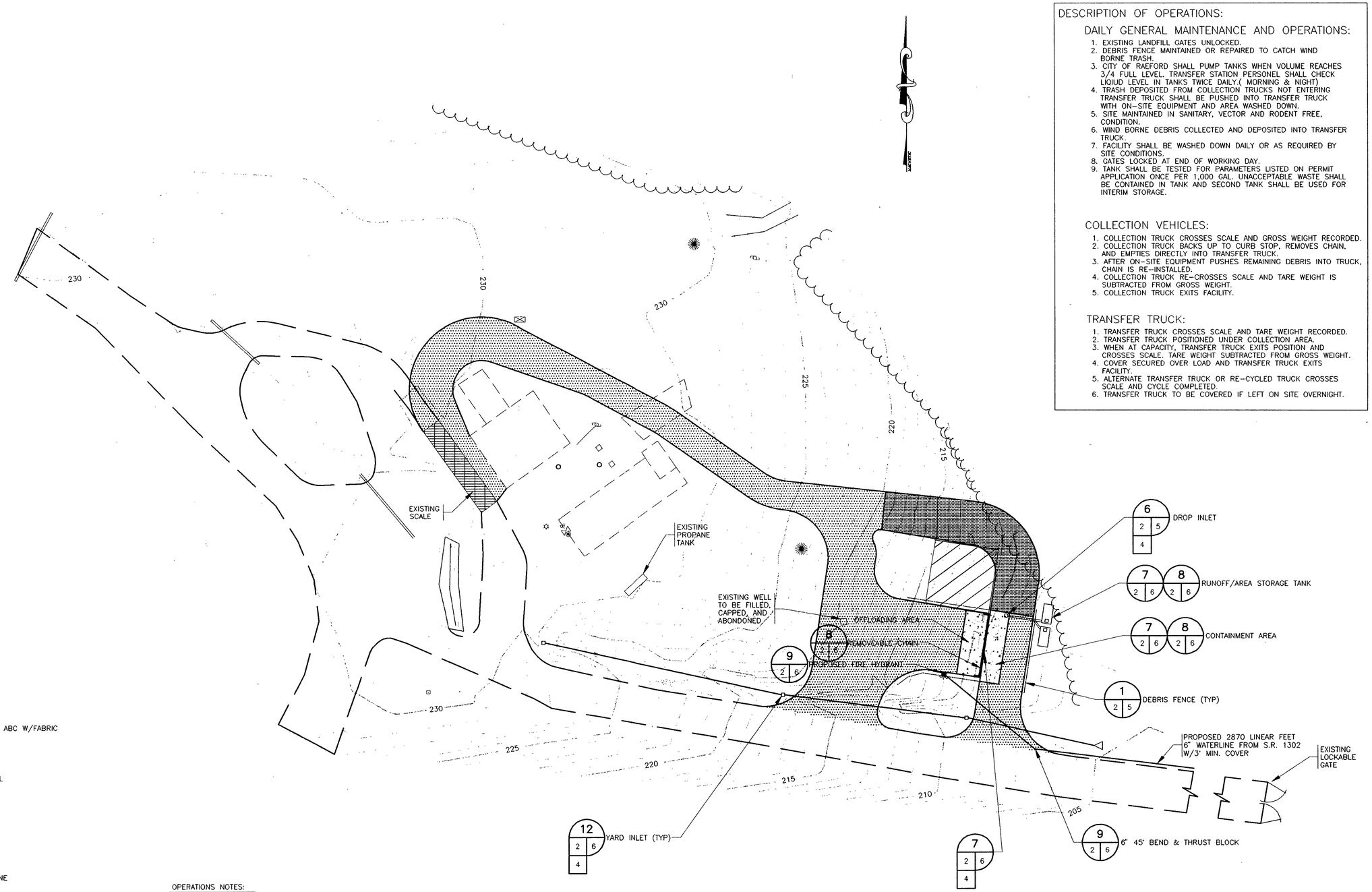

DESCRIPTION OF OPERATIONS:

DAILY GENERAL MAINTENANCE AND OPERATIONS:

1. EXISTING LANDFILL GATES UNLOCKED.
2. DEBRIS FENCE MAINTAINED OR REPAIRED TO CATCH WIND BORNE TRASH.
3. CITY OF RAEFORD SHALL PUMP TANKS WHEN VOLUME REACHES 3/4 FULL LEVEL. TRANSFER STATION PERSONEL SHALL CHECK LIQIUD LEVEL IN TANKS TWICE DAILY.(MORNING & NIGHT)
4. TRASH DEPOSITED FROM COLLECTION TRUCKS NOT ENTERING TRANSFER TRUCK SHALL BE PUSHED INTO TRANSFER TRUCK WITH ON-SITE EQUIPMENT AND AREA WASHED DOWN.
5. SITE MAINTAINED IN SANITARY, VECTOR AND RODENT FREE, CONDITION.
6. WIND BORNE DEBRIS COLLECTED AND DEPOSITED INTO TRANSFER TRUCK.
7. FACILITY SHALL BE WASHED DOWN DAILY OR AS REQUIRED BY SITE CONDITIONS.
8. GATES LOCKED AT END OF WORKING DAY.
9. TANK SHALL BE TESTED FOR PARAMETERS LISTED ON PERMIT APPLICATION ONCE PER 1,000 GAL. UNACCEPTABLE WASTE SHALL BE CONTAINED IN TANK AND SECOND TANK SHALL BE USED FOR INTERIM STORAGE.

COLLECTION VEHICLES:

1. COLLECTION TRUCK CROSSES SCALE AND GROSS WEIGHT RECORDED.
2. COLLECTION TRUCK BACKS UP TO CURB STOP, REMOVES CHAIN, AND EMPTIES DIRECTLY INTO TRANSFER TRUCK.
3. AFTER ON-SITE EQUIPMENT PUSHES REMAINING DEBRIS INTO TRUCK, CHAIN IS RE-INSTALLED.
4. COLLECTION TRUCK RE-CROSSES SCALE AND TARE WEIGHT IS SUBTRACTED FROM GROSS WEIGHT.
5. COLLECTION TRUCK EXITS FACILITY.

TRANSFER TRUCK:

1. TRANSFER TRUCK CROSSES SCALE AND TARE WEIGHT RECORDED.
2. TRANSFER TRUCK POSITIONED UNDER COLLECTION AREA.
3. WHEN AT CAPACITY, TRANSFER TRUCK EXITS POSITION AND CROSSES SCALE. TARE WEIGHT SUBTRACTED FROM GROSS WEIGHT.
4. COVER SECURED OVER LOAD AND TRANSFER TRUCK EXITS FACILITY.
5. ALTERNATE TRANSFER TRUCK OR RE-CYCLED TRUCK CROSSES SCALE AND CYCLE COMPLETED.
6. TRANSFER TRUCK TO BE COVERED IF LEFT ON SITE OVERNIGHT.

LEGEND

- 6" ABC W/FABRIC
- 2" I-2 ASPHALT + 6" ABC W/FABRIC
- CONCRETE
- TIMBER RETAINING WALL
- EXISTING STRUCTURES
- ELECTRICAL PANEL
- POWER POLE
- LIGHT POLE
- UNDERGROUND GAS LINE
- UNDERGROUND POWER LINE
- SEPTIC CLEANOUT
- TELEPHONE PEDISTAL
- DEBRIS FENCE

OPERATIONS NOTES:

1.) SPACE SHALL BE ALLOCATED ON SITE FOR THE COLLECTION OF TIRES.
2.) WHITE GOODS SHALL NOT BE COLLECTED AT SITE.
3.) BATTERIES AND WASTE OIL SHALL NOT BE COLLECTED AT SITE AT THIS TIME.
4.) ASBESTOS SHALL NOT BE COLLECTED AT SITE AT THIS TIME.
5.) CITY OF RAEFORD WILL PUMP CONTAINMENT TANKS WITH 500 GAL. TRUCK. CONTENTS SHALL BE DISPOSED OF AT RAEFORD WASTE TREATMENT PLANT.
6.) SITE SHALL BE PERMITTED FOR A MAXIMUM OF 180 DAYS BEGINNING UPON PERMIT APROVAL.
7.) DEBRIS FENCE MAY BE SECURED TO TRANSFER TRUCK AS ALTERNATIVE TO AREA DEBRIS FENCE

HOBBS, UPCHURCH & ASSOCIATES, P.A.
CONSULTING ENGINEERS
SOUTHERN PINES, NORTH CAROLINA 28387

NORTH CAROLINA PROFESSIONAL SEAL 10614 ENGINEER CHARLES D. HEISER

RAEFORD TRANSFER STATION

RAEFORD, NORTH CAROLINA

SITE AND OPERATIONAL PLAN

DATE:	04-16-93
DESIGNED:	DWS
DRAWN:	GMN
CHECKED:	CDH
SCALE:	1"=30'
SHEET NO.	2 OF: 6

PROJECT #: RA0202 FILE NAME: RA0202-2 DATE: 03-18-93 SCALE: 1" = 30'

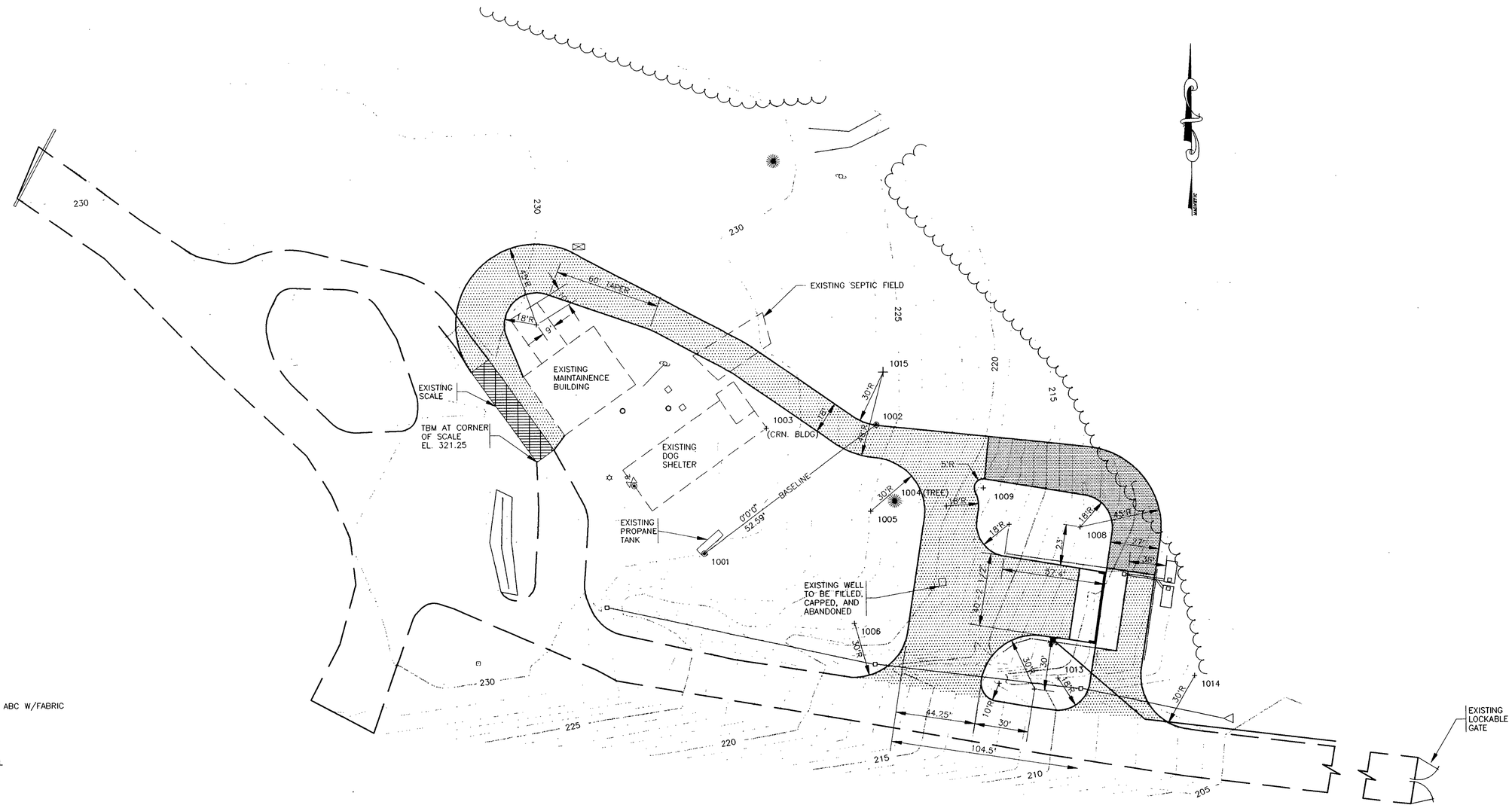

LEGEND

- 6" ABC W/FABRIC
- 2" I-2 ASPHALT + 6" ABC W/FABRIC
- CONCRETE
- TIMBER RETAINING WALL
- EXISTING STRUCTURES
- ELECTRICAL PANEL
- POWER POLE
- LIGHT POLE
- UNDERGROUND GAS LINE
- UNDERGROUND POWER LINE
- SEPTIC CLEANOUT
- TELEPHONE PEDISTAL
- DEBRIS FENCE

PT.	DIST.	ANGLE
1003	78.07'	333°22'24"
1004	110.02'	21°23'40"
1005	95.76'	22°33'21"
1006	92.12'	61°48'41"
1008	209.76'	32°49'31"
1009	159.70'	23°37'09"
1013	208.63'	56°16'01"
1014	281.15'	20°52'19"
1015	142.18'	351°23'18"

NOTES: 1.) PNTS. 1001 & 1002 ARE EXISTING IN FIELD.
2.) ALL DISTANCES FROM PT. 1001.
3.) ALL ANGLES TURNED FROM 1001, BACKSIGHTING 1002.

HOBBS, UPCHURCH & ASSOCIATES, P.A.
CONSULTING ENGINEERS
SOUTHERN PINES, NORTH CAROLINA 28387

NORTH CAROLINA PROFESSIONAL SEAL 10614 ENGINEER CHARLES D. HEISER, JR. 4/19/93

RAEFORD TRANSFER STATION
RAEFORD, NORTH CAROLINA

LAYOUT PLAN

DATE: 04-16-93
DESIGNED: DWS
DRAWN: GMN
CHECKED: CDH
SCALE: 1"=30'
SHEET NO. 3 OF 6

PROJECT # RA6302 FILE NAME: RA6302-3 DATE: 02-23-93 SCALE: 1" = 30'

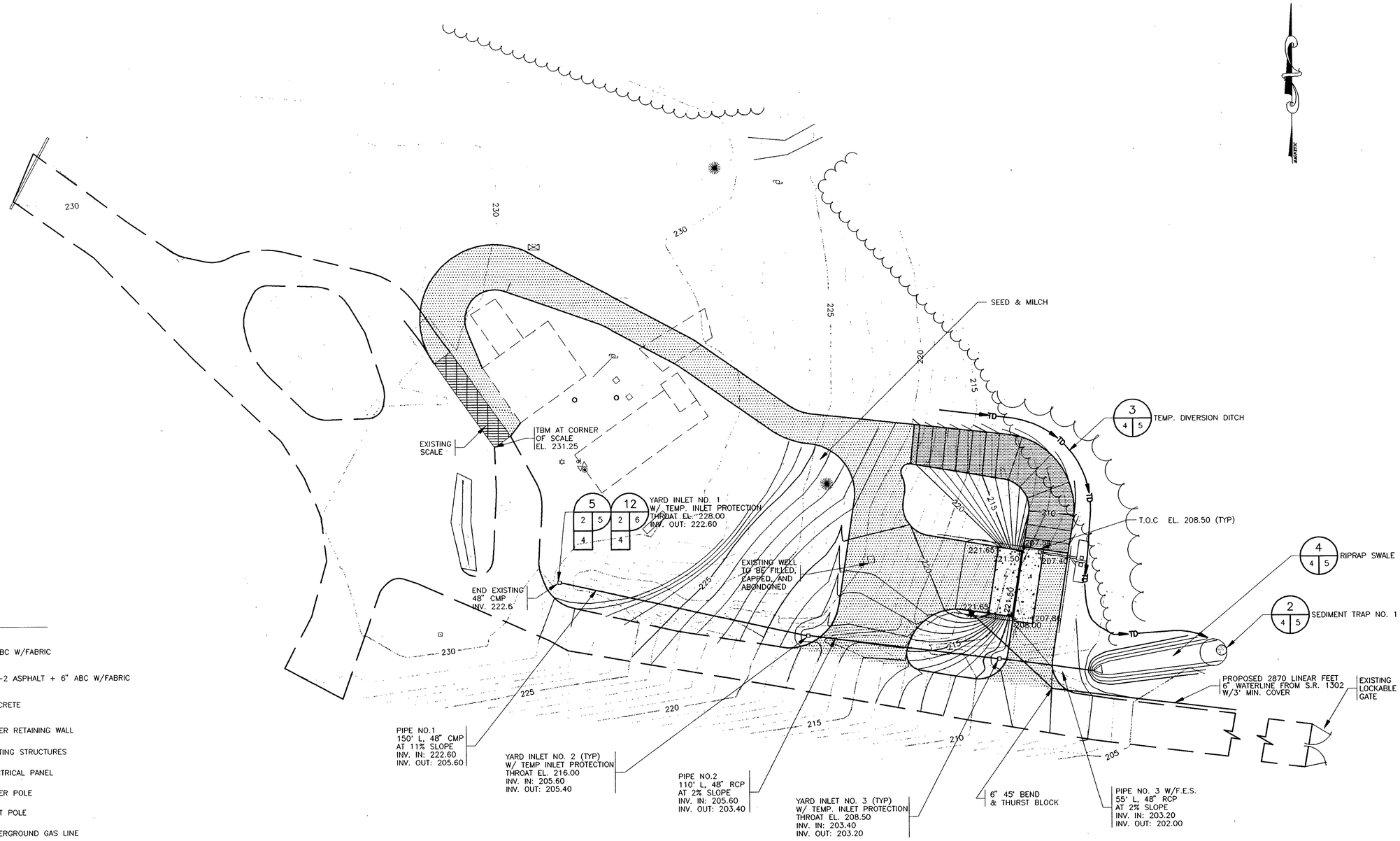

HOBBS, UPCHURCH & ASSOCIATES, P.A.
CONSULTING ENGINEERS
SOUTHERN PINES, NORTH CAROLINA 28387

NORTH CAROLINA PROFESSIONAL SEAL 10814 ENGINEER CHARLES D. HEISER 6/9/93

RAEFORD TRANSFER STATION
RAEFORD, NORTH CAROLINA

GRADING, DRAINAGE, AND
EROSION CONTROL PLAN

DATE:	04-16-93
DESIGNED:	DWS
DRAWN:	GMN
CHECKED:	CDH
SCALE:	1"=30'
SHEET NO.	4
OF:	6

PROJECT # R94302 FILE NAME: R94302-4 DATE: 02-23-93 SCALE: 1" = 30'

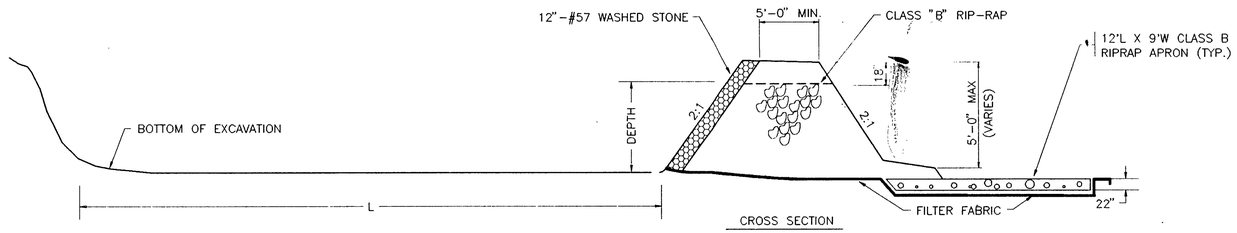

CROSS SECTION

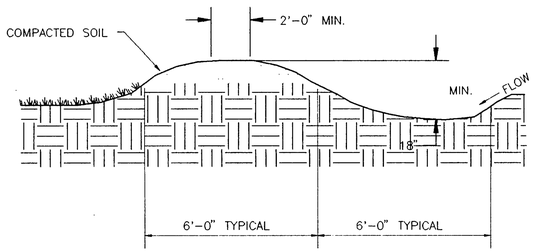

3 / 4 3 TEMPORARY DIVERSION DITCH

N.T.S.

SEDIMENT TRAP SCHEDULE

TRAP NO.	L. X W.	DPTH.	WEIR L.
1	34' X 17'	4'	17'

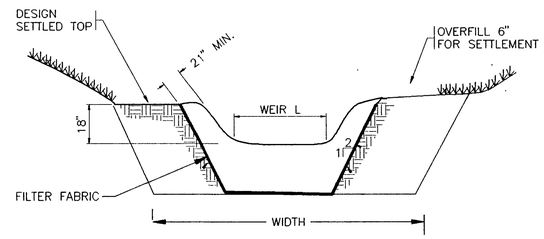

STONE SECTION

2 / 4 5 SEDIMENT TRAP DETAIL

N.T.S.

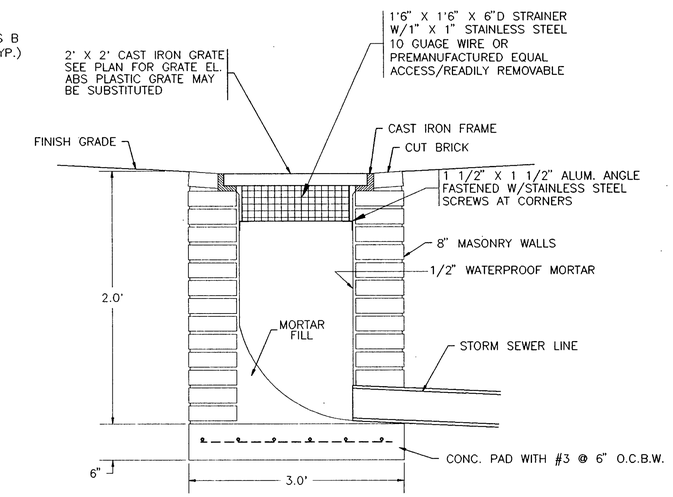

6 / 2 5 / 4 DROP INLET DETAIL

N.T.S.

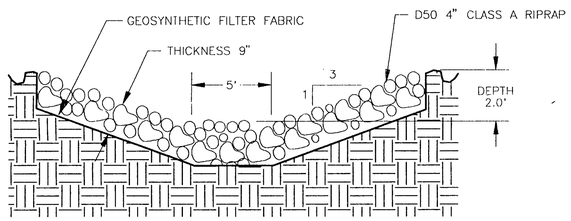

4 / 4 5 RIPRAP SWALE

N.T.S.

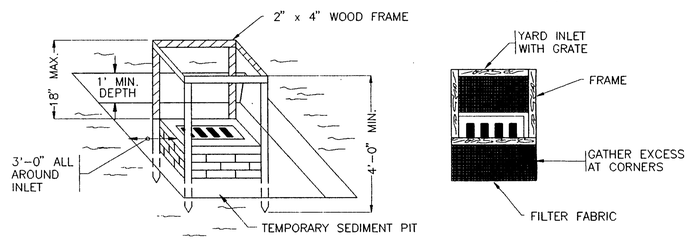

NOTE:

FILTER FABRIC TO BE BURIED A MINIMUM OF 12" BELOW GRADE (TYP.)

5 / 2 5 / 4 INLET PROTECTION DETAIL

N.T.S.

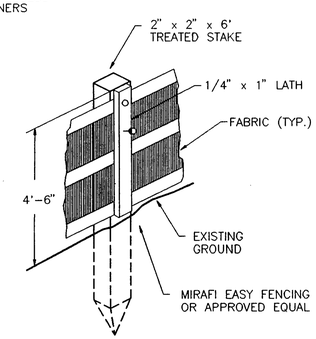

1 / 2 5 DEBRIS FENCE DETAIL

N.T.S.

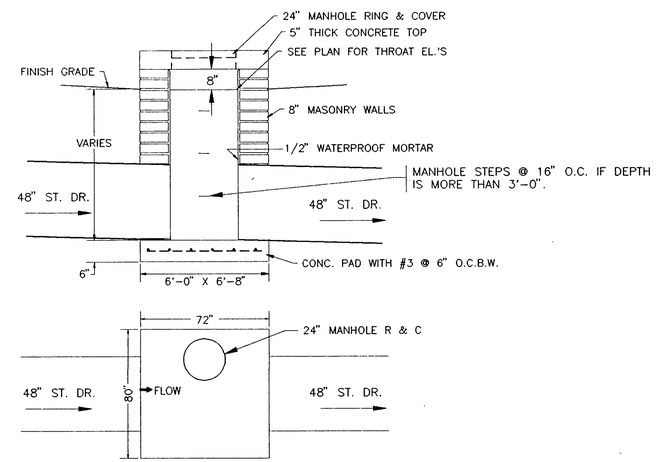

PLAN VIEW

NOTE: CONTRACTOR SHALL FLARE SWALE SUCH THAT WATER FROM THE CHANNEL MAY FLOW INTO BOTH SIDES OF THE INLET.

12 / 2 6 / 4 YARD INLET DETAIL

N.T.S.

SEEDING MIXTURE

SPECIES	RATE (LB./ACRE)
BAHIA	60
COMMON BERMUDA	60

NOTE :

BETWEEN MAY 10 AND AUG. 25, ADD 10 LBS./ACRE GERMAN MILLET.
BETWEEN AUG. 15 AND MAY 1, ADD 40 LBS./ACRE RYE (GRAIN).
BETWEEN SEPT. 1 AND OCT. 25 OVERSEED WITH 10 LBS./ACRE OF KOBE LESPEDEZA.

SEEDING DATES :

JULY 25 – OCT. 25
FEB. 1 – MAY 10

SOIL AMENDMENTS

APPLY AGRICULTURAL LIMESTONE – 2 TONS/ACRE
FERTILIZER – 1,000 LBS./ACRE – 10–10–10
SUPERPHOSPHATE – 500 LBS./ACRE – 20% ANALYSIS
MULCH – 2 TONS/ACRE – SMALL GRAIN STRAW
ANCHOR – ASPHALT EMULSION @ 300 GAL./ACRE

MULCH

APPLY 4,000 TO 5,000 LB/ACRE GRAIN STRAW OR EQUIVALENT COVER. ANCHOR MULCH BY TACKING WITH ASPHALT, ROVING OR NETTING.

MAINTENANCE

REFERTILIZE IN THE SECOND YEAR UNLESS GROWTH IS FULLY ADEQUATE. MAY BE MOWED ONCE OR TWICE A YEAR. RESEED, FERTILIZE AND MULCH DAMAGED AREAS IMMEDIATELY.

SEEDING SCHEDULE

N.T.S.

1. INSTALL SILT FENCE, SEDIMENT BASINS, AND/OR OTHER MEASURES AS SHOWN ON THE APPROVED PLAN.
2. CALL FOR ONSITE INSPECTION BY THE SEDIMENTATION AND EROSION CONTROL INSPECTOR.
3. BEGIN GRADING. MAINTAIN SEDIMENT FREE EROSION CONTROL MEASURES AS REQUIRED.
4. INSTALL THE STORM COLLECTION SYSTEM.
5. GRADED SLOPES AND FILLS ARE TO BE PLANTED OR PROVIDED WITH PROTECTIVE COVER SUFFICIENT TO RESTRAIN THE EROSION WITHIN THIRTY WORKING DAYS AFTER THE COMPLETION OF ANY PHASE OF GRADING. ALL AREAS UPON WHICH NO FURTHER LAND DISTURBING ACTIVITY WILL BE UNDERTAKEN ARE TO BE PLANTED OR PROVIDED WITH PROTECTIVE COVER WITHIN THIRTY WORKING DAYS.
6. AS CONSTRUCTION PROGRESSES, INSTALL PERMANENT EROSION CONTROL MEASURES SUCH AS RIP–RAP APRONS, VELOCITY DISSIPATORS, CHANNEL LINERS, GRAVEL BASE COURSE, ETC.
7. WHEN CONSTRUCTION IS COMPLETE AND ALL AREAS STABILIZED, CALL FOR ONSITE INSPECTION BY THE SEDIMENTATION AND EROSION CONTROL OFFICE.
8. IF THE SITE IS APROVED, REMOVE TEMPORARY DIVERSIONS, SILT FENCING, SEDIMENT BASINS, ETC., AND SEED, PAVE, OR RIP–RAP RESULTING DISTURBED AREAS.
9. WHEN VEGITATION IS ESTABLISHED, CALL FOR FINAL SITE INSPECTION.

EROSION CONTROL CONSTRUCTION NOTES

N.T.S.

NOTES:

1.) THE CONTRACTOR SHALL CONTACT THE POWER CO., GAS CO., AND TELEPHONE CO. FOR THE EXACT LOCATION OF ALL UNDERGROUND MAINS, CABLES, OR LINES BEFORE CONSTRUCTION BEGINS.

2.) PIPE SEPARATION: THE FOLLOWING MINIMUM PIPE SEPARATION WILL BE MAINTAINED: 12 INCHES VERTICAL SEPARATION BETWEEN CROSSING OF SANITARY SEWER AND STORM SEWERS 18 INCHES VERTICAL SEPARATION BETWEEN CROSSING OF SEWER (INCLUDING FORCE MAINS) AND WATER MAINS, AND 10 FEET HORIZONTAL SEPARATION BETWEEN SANITARY SEWER (INCLUDING FORCE MAINS) AND WATER MAINS. IF THESE SEPARATIONS CANNOT BE MAINTAINED, DUCTILE IRON PIPE WILL BE USED 10 FEET EITHER SIDE OF CROSSING AND ALONG ENTIRE LENGTH OF LINE LESS THAN 10 HORIZONTAL FEET FROM WATER MAINS. THE CONTRACTOR SHALL RECEIVE APPROVAL FROM THE ENGINEER IN THE FIELD BEFORE PAYMENT WILL BE MADE AT DUCTILE IRON PRICES.

HOBBS, UPCHURCH & ASSOCIATES, P.A.
CONSULTING ENGINEERS
SOUTHERN PINES, NORTH CAROLINA 28387

NORTH CAROLINA PROFESSIONAL SEAL 10814 ENGINEER CHARLES D. HELSER

RAEFORD TRANSFER STATION
RAEFORD, NORTH CAROLINA

DRAINAGE & EROSION CONTROL DETAILS

DATE: MAR. 18,1993
DESIGNED: DWS
DRAWN: PWD
CHECKED: DWS
SCALE: N.T.S.
SHEET NO. 5 OF 6

PROJECT # RA9302 FILE NAME: RA9302-5 DATE03-15-93 SCALE: N.T.S.

NOTE: THRUST BLOCKS SHALL BE CONSTRUCTED OF 2000 P.S.I. CONCRETE

TABLE "A" DIMENSIONS (IN FEET)

BEND	PIPE SIZE (NOM. DIA. IN INCHES)								
	2	4	6	8	10	12	16	18	20
90°	1.5	1.9	2.8	3.8	4.7	5.9	7.5	8.5	9.4
45°	1.0	1.4	2.1	2.8	3.5	4.3	5.5	6.2	6.9
22 1/2°	0.8	1.0	1.5	2.0	2.5	3.1	4.0	4.5	4.9
11 1/4°	0.8	1.0	1.1	1.5	1.8	2.2	2.2	3.2	3.6

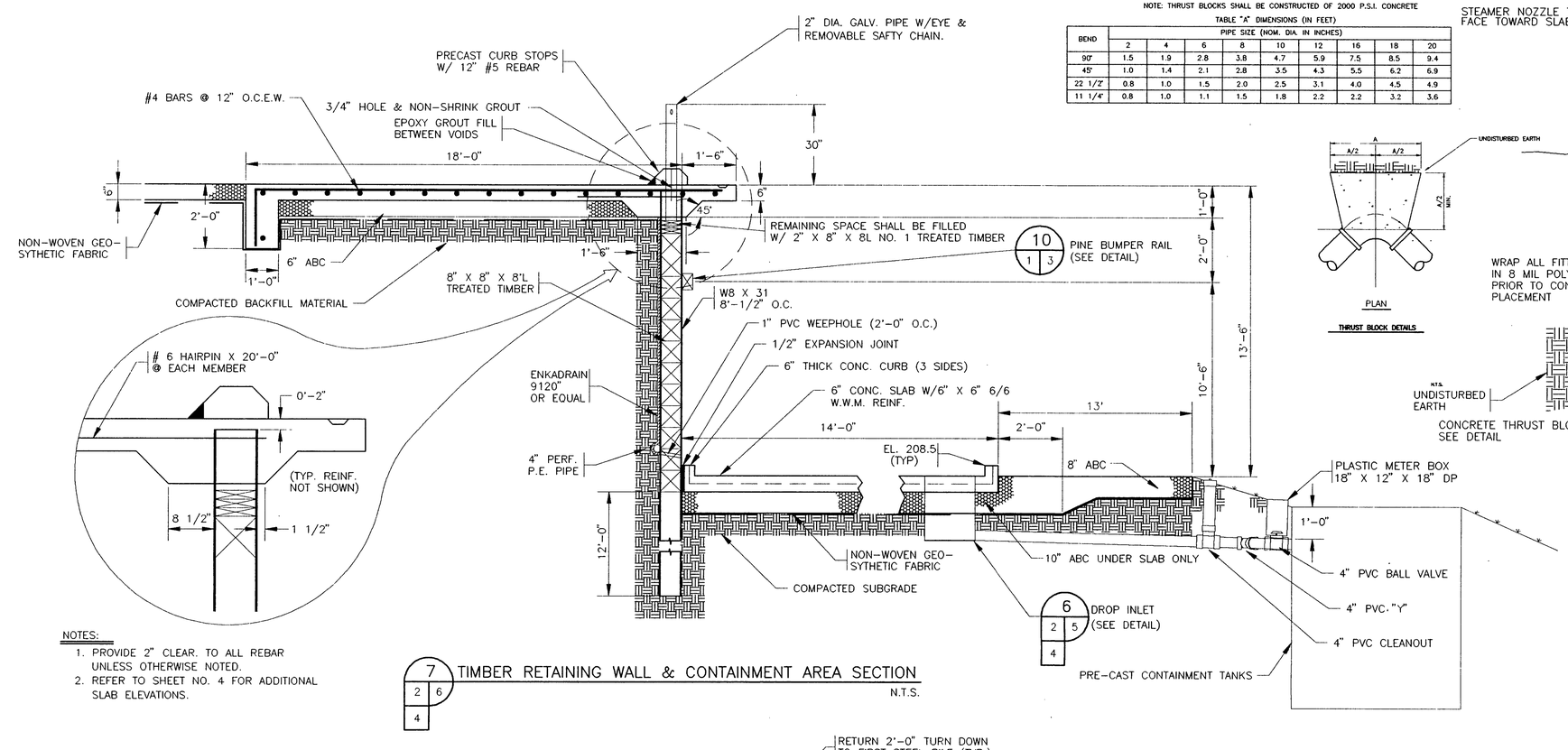

NOTES:

1. PROVIDE 2" CLEAR. TO ALL REBAR UNLESS OTHERWISE NOTED.
2. REFER TO SHEET NO. 4 FOR ADDITIONAL SLAB ELEVATIONS.

7 2 6 4 TIMBER RETAINING WALL & CONTAINMENT AREA SECTION

N.T.S.

THRUST BLOCK DETAILS

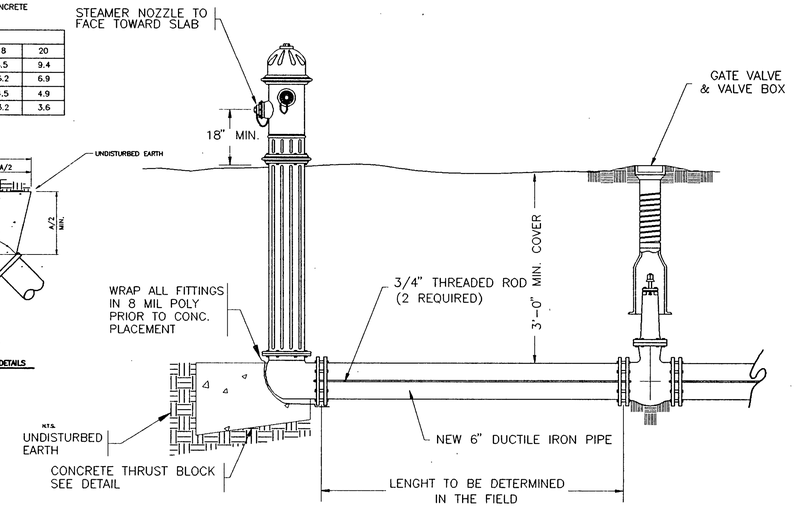

9 2 6 FIRE HYDRANT AND VALVE DETAIL

N.T.S.

NOTE: CONTRACTOR SHALL PLACE A SHEET OF 8 MIL POLY BETWEEN FITTINGS AND THRUST BLOCK.

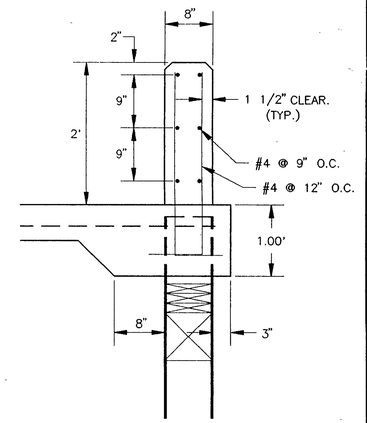

NOTE: TYP. SLAB REINF. NOT SHOWN

14 6 6 TYP. SECTION AT SIDE

N.T.S.

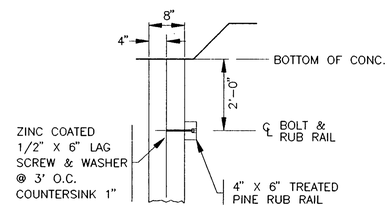

10 6 6 PINE BUMPER RAIL DETAIL

N.T.S.

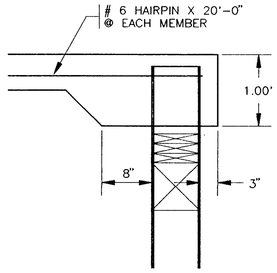

NOTE: TYP. SLAB REINF. NOT SHOWN

13 6 6 TYP. SECTION AT SIDE

N.T.S.

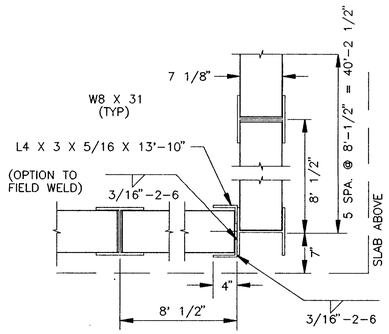

NOTE: STRUCTURAL STEEL SHALL CONFORM TO ASTM A-36

11 6 6 CORNER DETAIL

N.T.S.

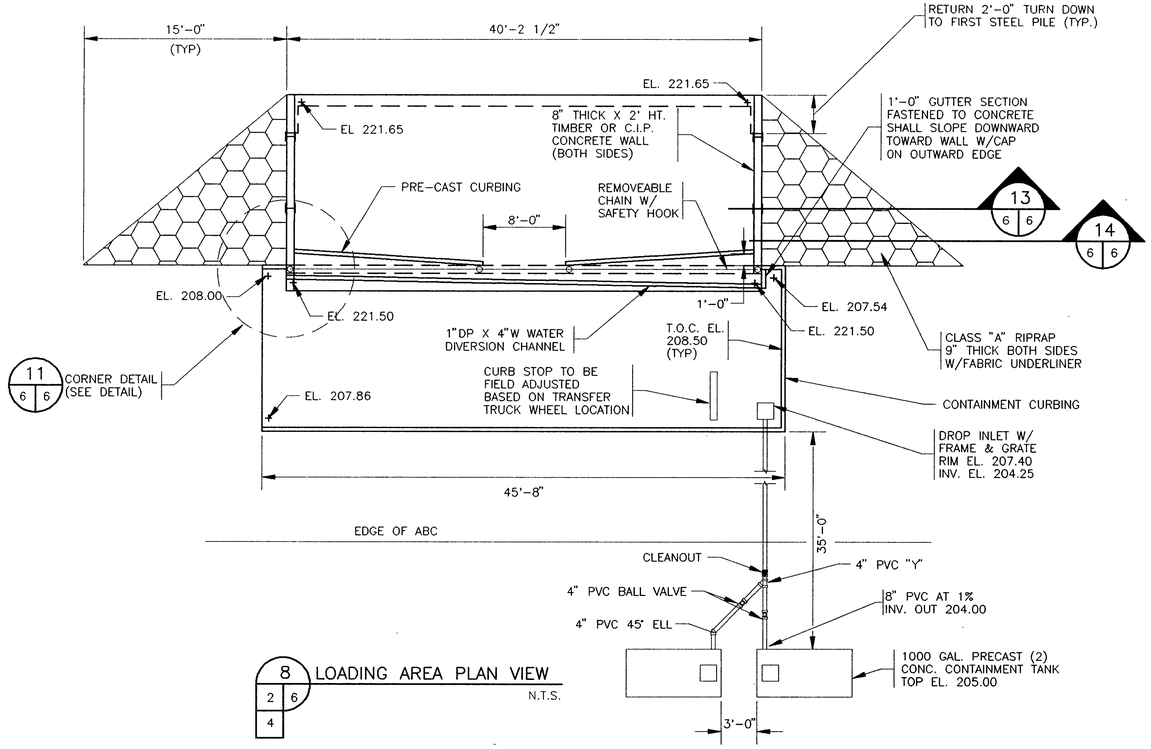

8 2 6 4 LOADING AREA PLAN VIEW

N.T.S.

GENERAL NOTES:

1.) ALL CONCRETE WORK SHALL CONFORM TO ACI 301 AND ACI 318.
2.) STEEL PILES SHALL BE ADEQUATELY BRACED UNTIL CONCRETE SLAB HAS CURED FOR (14) DAYS.
3.) ALL CONSTRUCTION SHALL BE IN ACCORDANCE WITH NORTH CAROLINA STATE BUILDING CODES.

HOBBS, UPCHURCH & ASSOCIATES, P.A.
CONSULTING ENGINEERS
SOUTHERN PINES, NORTH CAROLINA 28387

NORTH CAROLINA PROFESSIONAL SEAL 10614 ENGINEER CHARLES D. HEISER 10/12/93

RAEFORD TRANSFER STATION
RAEFORD, NORTH CAROLINA

LOADING AREA AND UTILITY DETAILS

DATE:	04-16-93
DESIGNED:	DWS
DRAWN:	GMN
CHECKED:	CDH
SCALE:	N.T.S.
SHEET NO.	6
OF:	6

PROJECT # RA9302 FILE NAME: RA9302-6 DATE: 03-02-93 SCALE: N.T.S.