NCDENR
North Carolina Department of Environment and Natural Resources
Division of Waste Management
Dexter R. Matthews
Director

Beverly Eaves Perdue
Governor

Dee Freeman
Secretary

November 6, 2012

Mr. Jim Lanier
Earth Farms, LLC Composting Facility
Post Office Box 184
Stanley, North Carolina 28164

Re: Permit Modification
SWC-36-13

Dear Mr. Lanier:

The Division of Waste Management, Solid Waste Section, has reviewed your requests to add an aerated static pile composting process and an additional feedstock to your composting operation, SWC-36-13. Your request to add the aerated static pile composting process and the additional feedstock are approved for a six month demonstration. The total tons of processed chicken waste shall not exceed 1,600 tons per year without additional approval by the Division of Waste Management. These changes will be incorporated into your permit.

The permit modification is effective upon receipt of this letter. If you have any questions please feel free to contact Tony Gallagher at 919-707-8280.

Sincerely,

Michael E. Scott, Chief
Solid Waste Section

cc: Bill Wagner, Environmental Senior Specialist, Asheville Regional Office
Tony Gallagher, Composting & Land Application Branch Head
Central File

h:cla/compost/permits/19-chath/19-05 perm mod-8-11

1646 Mail Service Center, Raleigh, North Carolina 27699-1646
Phone: 919-508-8400 \ FAX: 919-715-4061 \ Internet: www.wastenotnc.org

An Equal Opportunity \ Affirmative Action Employer

One NorthCarolina Naturally

Gallagher, Tony

From: Gallagher, Tony
Sent: Wednesday, September 19, 2012 2:38 PM
To: 'Jim Lanier'
Subject: RE: Earth Farms Drawing for ASP
Attachments: image001.jpg; image002.jpg

Jim,

I have the permit mod letter drafted and ready but I need a waste analysis of the processed chicken patties since it is a different type feedstock, the name of the company you are getting this feedstock from and the daily or weekly tons you are planning on receiving.

Thanks

M.A. (Tony) Gallagher, Supervisor
Composting & Land Application Branch
Solid Waste Section
phone/fax (919)707-8280

E-mail address - tony.gallagher@ncdenr.gov

http://portal.ncdenr.org/web/wm/sw/septage

E-mail correspondence to and from this address may be subject to North Carolina public records law and may be disclosed to third parties.

From: Jim Lanier [mailto:Jim@stanleyenviro.com]
Sent: Monday, September 17, 2012 5:08 PM
To: Gallagher, Tony
Subject: Earth Farms Drawing for ASP

Tony,

Let me know if you need anything else.

Jim Lanier, President
Stanley Environmental Solutions Inc.
Earth Farms Organics
704-263-8186 (office)
704-860-5534 (cell)
Earthfarms.com
Stanleyenviro.com

Romans 10:13

Gallagher, Tony

From: Gallagher, Tony
Sent: Wednesday, September 19, 2012 2:33 PM
To: 'Jim Lanier'
Subject: RE: Earth Farms LLC Operations Guide 7-30-09.docx
Attachments: image001.jpg; image002.jpg

Hi Jim,

I have read your wording and it is fine for your compost windrows to be tested weekly for the windrows that have demonstrated compliance with PFRP
highlighted in your attached operations manual. For your ASP pile however I will still need you
to provide daily temperature readings to meet your PFRP and VAR requirements.

Also please provide that language as part of an addendum attach it to the back of your current operation manual instead on in your operations manual and send me
a copy so I can put it with our current copy of your operating manual.

Thanks

M.A. (Tony) Gallagher, Supervisor
Composting & Land Application Branch
Solid Waste Section
phone/fax (919)707-8280

E-mail address - tony.gallagher@ncdenr.gov

http://portal.ncdenr.org/web/wm/sw/septage

E-mail correspondence to and from this address may be subject to North Carolina public records law and may be disclosed to third parties.

From: Jim Lanier [mailto:Jim@stanleyenviro.com]
Sent: Monday, September 17, 2012 7:13 PM
To: Scott, Michael; Gallagher, Tony
Subject: Earth Farms LLC Operations Guide 7-30-09.docx

I would like to request a change in our Operations Manual on when we will monitor temperatures. I would like to change daily temperature recording to weekly when active and daily when in 15 Day PFRP. Please see highlighted changes and advise when OK to begin changes.

Best Regards,

Jim Lanier, President
Stanley Environmental Solutions Inc.
Earth Farms Organics

Gallagher, Tony

From: Jim Lanier [Jim@stanleyenviro.com]
Sent: Thursday, June 28, 2012 10:40 AM
To: Gallagher, Tony; Tommy Morrison; Wylie, Connie
Subject: Demonstration Aearated Static Pile Composting
Attachments: LanierApril2_12.pdf

Tony,

This is the design for the Aerated Static Compost Demonstration I talked to you about doing at our facility. I have the material and these drawings and need to see what else you would need for us to get it operating. This will be at our Earth Farms Facility already permitted and will use existing permitted space.

Thank You,

Jim Lanier, President
Stanley Environmental Solutions Inc.
Earth Farms Organics
704-263-8186 (office)
704-860-5534 (cell)
Earthfarms.com
Stanleyenviro.com

Romans 10:13
Follower Of One!!

stanley environmental solutions

earth farms ORGANICS
COMPOST & TOPSOIL PRODUCTS

Look Brooks farms
CLA Compost
Permit mod Chatham
letter

Gallagher, Tony

From: Jim Lanier [Jim@stanleyenviro.com]
Sent: Monday, September 17, 2012 7:13 PM
To: Scott, Michael; Gallagher, Tony
Subject: Earth Farms LLC Operations Guide 7-30-09.docx
Attachments: Earth Farms LLC Operations Guide 7-30-09.docx

I would like to request a change in our Operations Manual on when we will monitor temperatures. I would like to change daily temperature recording to weekly when active and daily when in 15 Day PFRP. Please see highlighted changes and advise when OK to begin changes.

Best Regards,

Jim Lanier, President
Stanley Environmental Solutions Inc.
Earth Farms Organics
704-263-8186 (office)
704-860-5534 (cell)
Earthfarms.com
Stanleyenviro.com

Romans 10:13
Follower Of One!!

stanley environmental solutions

earth farms ORGANICS
COMPOST & TOPSOIL PRODUCTS

Materials will be added to the windrows through the Cat Loader mixer buckets and by dump truck. Feedstock materials will be transported to the windrows and placed carefully in windrows by lifting and dropping materials to provide final mixing and blending, preliminary aeration, and minimal compaction prior to windrow activities. Material placed in this manner should heat adequately to assure PFRP compliance. Temperatures will be monitored and recorded daily on all windrows that are in the PFRP Window and weekly on all other windrows to demonstrate compliance with PFRP requirements. Windrow areas are designated on the facility permit and all windrows will be marked with date and dates of turning.

Material will be discharged from the windrows after achieving the VAR and PFRP compliance. Demonstrated compliance AR is temperatures exceeding 104 degrees F for 14 days or longer, and averaging 114 degrees F or higher for the 14 day period. Compliance with PFRP involves maintaining temperatures at or above 131 degrees F for 15 days with at least 5 turnings of the windrows. These PFRP temperatures have consistently been exceeded in the VAR area of windrow operations and a PFRP windrow is a "de facto" VAR. Material will be moved clockwise through Bay 3 using a front-end-loader bucket and windrow turner until material has achieved required VAR and PFRP compliance and has been rotated in the windrow for 90 to 120 days. Temperatures will be monitored at specified locations along an active windrow. These are 20%, 40%, 60% and 80% of the length and at a depth of 24" into the windrow. Temperature monitoring will be accomplished Monday through Saturday.

Pile venting and additional turning will be necessary if the compost temperatures remain in excess of 140 degrees immediately prior to bagging, bulk mixing, or bulk transport. In lieu of bagging or bulk loading, compost that has completed the VAR and PFRP process in Bay 4 may be transported outside the windrow area to Bay 5, the bulk storage area for additional curing or stock-piling to insure sufficient material is available for large orders. The exterior storage area consists of compacted earthen pads.

A quality assurance/quality control program will be instituted at Earth Farms, LLC. This process will help to assure:

A. compliance with appropriate rules and regulations
B. product quality consistent with specified or designated end use
C. trained personnel remain available to manufacture quality compost

The QA/QC effort will involve the compliance testing and monitoring including: routine temperature monitoring and recording, nutrient and regulated metals testing, foreign material content and bacteriologic sampling. The compliance testing for regulated metals and bacteria will be conducted by a private certified laboratory. Sampling will be conducted every 20,000 yards of material produced or twice (6 month intervals) per year. Annual calibration will be required on temperature probes. An annual report submitted to DWM is required as a part of the QA/QC program.

In the event that an additional raw material stream becomes available to be added to the composting operation, the material will be submitted for review and approval by the DWM-Solid Waste Section or to this consultant prior to use as a feedstock. The following procedure

O2Compost
Compost Systems & Training

September 8, 2012

Mr. Jim Lanier
Earth Farms Organics
351 Colt Road
Dallas, NC 28034

Re: Compost Mix Recipe for Aerated Static Pile Composting – Pilot Test Project

Dear Jim:

Thank you again for asking O_2Compost for assistance in developing a mix recipe for your Aerated Static Pile (ASP) Pilot Project. Based on our discussions, we understand that there are four different feedstock materials being considered for this trial, including: 1) Vegetable Salad Greens; 2) Processed Chicken Paddies; 3) Grease Trap Waste; and 4) Wood Residuals to serve as a bulking agent.

When developing any new compost mix, it is very important to develop trial blends that fall within recommended ranges for three parameters:

- Nutrient Balance, as measured by the Carbon to Nitrogen Ratio (C:N);
- Bulk Density as an indirect method of determining mix porosity; and
- Moisture Content, based on dry weight of the feedstock components

I have provided with this letter a Technical Memorandum (TM) that discusses the significance of each parameter (and others) along with methods of evaluating each parameter using simple field tests. Please review this TM and follow the guidelines contained therein as you develop your test mix.

As referenced in the TM, we often use a "Mix Calculator" (i.e., Excel Spreadsheet) to determine suitable proportions for a given number of feedstocks. We have done this for your project, using book values for physical and nutrient characteristics, as listed in the On-Farm Composting Handbook, Appendix A. The recommended mix proportions are listed on Table 1, on the following page of this letter.

It is important to recognize that the Mix Calculator is a tool that we use to get us "in the ballpark", and that field judgment exercised during pile construction, as well as during and following the Active Phase of composting (i.e., the first 21 to 30 days) is essential to ultimately develop a suitable mix recipe.

The initial mix, as presented in Table 1, below is conservative in an effort to avoid the generation of offensive odors. By conservative, I mean that the C:N ratio is higher than the theoretical ideal (41:1 vs. 30:1). With successive trials, I suggest reducing the volume of wood residuals to attain an initial C:N closer to 30:1, provided that odors do not become a problem.

The anticipated moisture content of the initial mix is 59 percent, but the actual moisture content is highly dependent on the moisture of the various components at the time of mixing, especially the wood residuals. Using the field test procedures as outlined in the TM, Appendix A, be sure to adjust the moisture content to achieve a moisture content of 60 to 65%. A mix that is too wet (over 70%) will impede uniform flow of air throughout the compost pile and a mix that is too dry (below 45%) will not support the microbiology of the compost system.

PO Box 1026
Snohomish WA 98291
www.o2compost.com
peter@o2compost.com
Phone: 360-568-8085
Fax: 360-563-5790

Material	Mix Parts CY	Moisture Content %	Solids Content %	Total N %	Total C %	C:N	Bulk Density lb/cu yd
Vegetable Salad	**125.0**	65	35	1.00	50	41	900
Chicken Paddies	**25.0**	65	35	2.40	12	5	1200
Grease Trap Waste	**40.0**	65	35	4.00	17	4	1400
Wood Residuals	**250.0**	50	50	0.10	50	500	600
Total Volume	**374.0** (1)						
extra water to add, gallons	**0**						
extra water to add, lbs	**0**						
Mix Carbon %	**43**		Target				
Mix Nitrogen %	**1.04**		Range				
Mix C:N	**41**		20-40:1				
Mix moisture	**59**		40-65%				

Table 1 – Compost Mix Calculator: Recommended Trial Mix Proportions

(1) The Total Volume is approximately 85% of the sum of the individual component volumes because liquids and fine textured materials fill the voids of the bulking material.

As discussed in the TM, the ASP Method of Composting includes a cover layer of Finished Compost Cover over the top of the entire pile. This layer should consist of approximately 12-inches of unscreened compost from a previous compost batch. This cover layer serves as:

1. An insulating cover that enables the new compost mix to achieve temperatures sufficient to destroy pathogens, parasites and weed seeds (55°C for a minimum of 3-days);
2. A biofilter layer to absorb potentially malodorous gases, reduce VOC emissions and retain nutrients in the compost (primarily Nitrogen compounds);
3. A vector barrier to prevent access to flies, birds, rodents and other nuisance creatures;
4. A moisture barrier so that all of the new mix stays sufficiently wet to sustain biologic degradation of the new compost mix, as it transforms to a finished compost product.

For the biofilter layer to function properly, it is essential that the finished compost cover be kept wet (between 40% - 50%) throughout the active phase of composting. This may require periodic applications of water in arid climates.

When the first Aerated Static Pile has been constructed, please take a round of initial pile temperatures, as outlined in your Training Manual. When initial temperatures have been recorded, start your rate of airflow at 2-minutes ON and approximately 30-minutes OFF. I anticipate that the pile temperatures will increase significantly within the first 24-hours of operation. If the pile temperatures exceed 155°F, I suggest increasing the airflow to 2-minutes ON and 20-Minutes OFF, and if the temperatures continue to stay high, increase the ON time in 1 or 2 minute intervals.

As part of the O2Compost Pilot Training Program, we encourage you to send updates on your progress and to call with any questions as you begin developing a suitable mix recipe. To this end, it would be very helpful to receive photographs of the individual mix components, the mixing procedure and of the completed. I will also send you an Excel Spreadsheet to use when collecting your daily temperature data. Please forward this data to us at least twice weekly for the first batch and we will reply to suggest adjustments to the aeration system.

Also, please make note of any other observations and record these on the temperature spreadsheet or in a separate Pilot Project Journal. Observations may include such things as uneven pile temperatures, strong odors, noticeable venting of steam, etc.

Again, we appreciate the opportunity to help you during this pilot phase of your project.

Best regards,

Peter Moon, P.E.

President / Principal Engineer
O_2Compost

Earth [illegible] LLC.

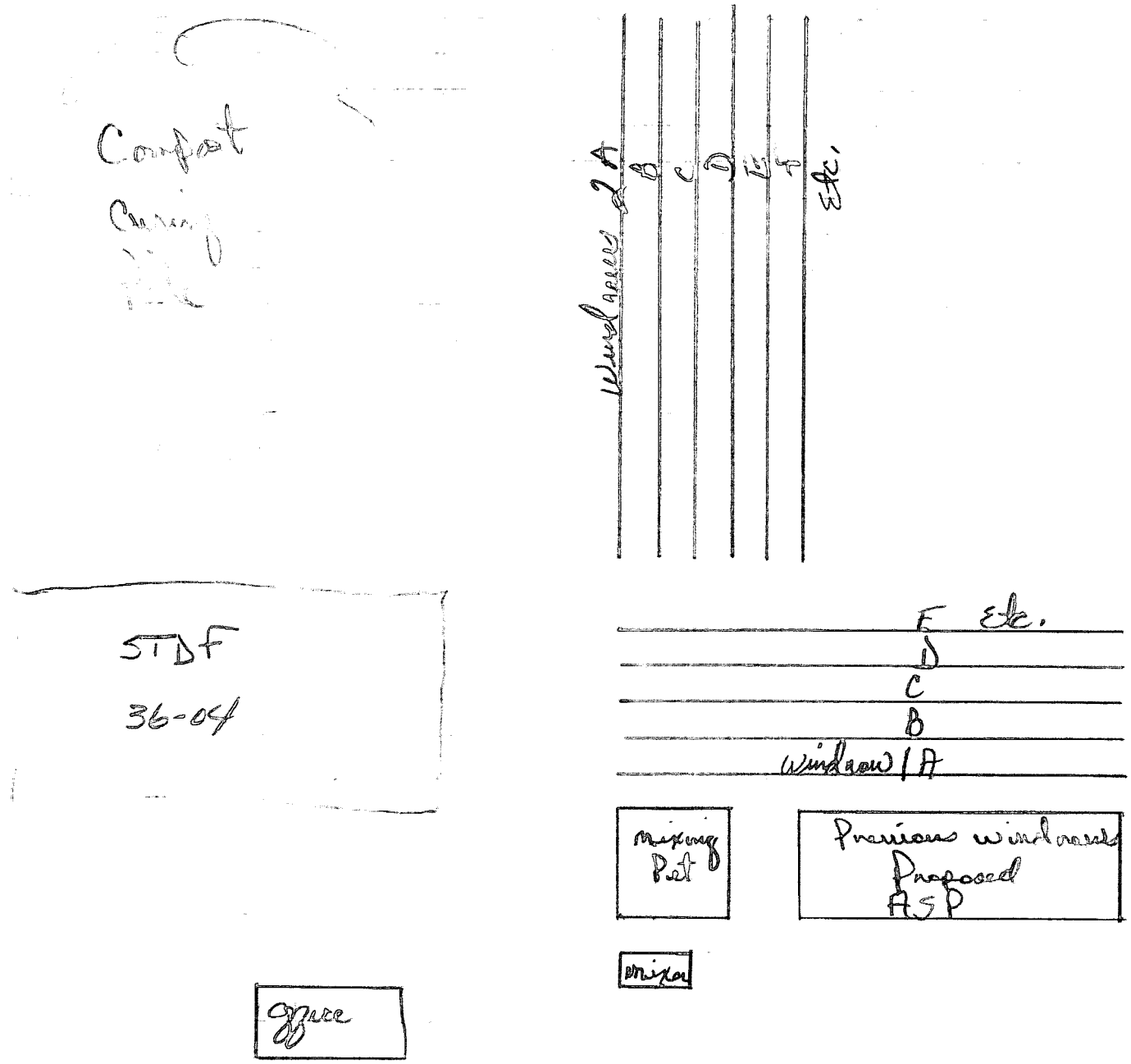
Compost
Curing
Windrows 2 A
B
C
D
E
F
Etc.
STDF
36-04
F Etc.
D
C
B
windrow 1 A
mixing Pet
Previous windrows Proposed ASP
mixer
office

Permit not letter six months

Olm where site plan 3 days 131 aerated static

11 vector - (wheat waste)

Earth Farms Organic Aerated Static Pile Compost System Design

Aerated Compost Bin - Design Basis Memorandum

6 month
↓ aerated static

Earth Farms Organics
Jim Lanier
351 Colt Road
Dallas, NC 28034
704-860-5534
877-263-8186
jim@stanleyenviro.com

Feedstock	% Moisture	% C	% N	Bulk Density
Salad Residual	65	44	1.0	900
Grease Trap	65	17	4.0	1400
Breaded Chicken	65	12	2.4	1200
Wood Residual	50	50	0.1	600

All values are literature values.

Volume of feedstock

Salad Residual	60 tons per day
Grease trap	30 tons per day
Breaded Chicken	15 tons per day, 4 days per week
Wood residual	105 tons per day

Demonstration Study Pile to be an example of one day of feedstock

Salad Residual	60 tons, 900 bulk density, 133 cubic yards per day
Grease trap	30 tons, 1400 bulk density, 43 cubic yards per day
Breaded Chicken	15 tons, 1200 bulk density, 21 cubic yards per day
Wood residual	54 tons, 600 bulk density, 180 cubic yards per day

Total mixture

Volume of Pile	340 cubic yards, with 10% consolidation
Bulk density	912 lbs per cubic yard
Moisture	60%
C:N	34

Carbon should be twice
Where on facility map

Dimensions of pile	8 ft high, 70 ft long, 27 ft wide for each (aeration)
Aeration system	6 inch PVC sewer grade, 4 pipe manifold sewer grade with 4 inch schedule 40 PVC aeration pipe.
Compost cycle time	30 days active phase
Compost curing	Cure in separate area, not shown
Electrical	Will bring in; 110 Volt; 1.5 Hp blower
Water	Owner to provide

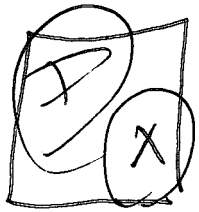

I have reviewed the contents of this Design Basis Memorandum and find the information included to be accurate. I authorize O2Compost to proceed with final design.

Signature of Client:_____ Date: _____

Signature of O2Compost Rep:_____ Date: _____

O2Compost Compost Systems &Training	Reviewed: Peter Moon P.E.	Date: 4/2/12	Design Basis Memorandum	Drawing No; 1/4
	LanierApril2_12 Harold Ruppert			

Earth Farms Organic Aerated Static Pile Compost System Design

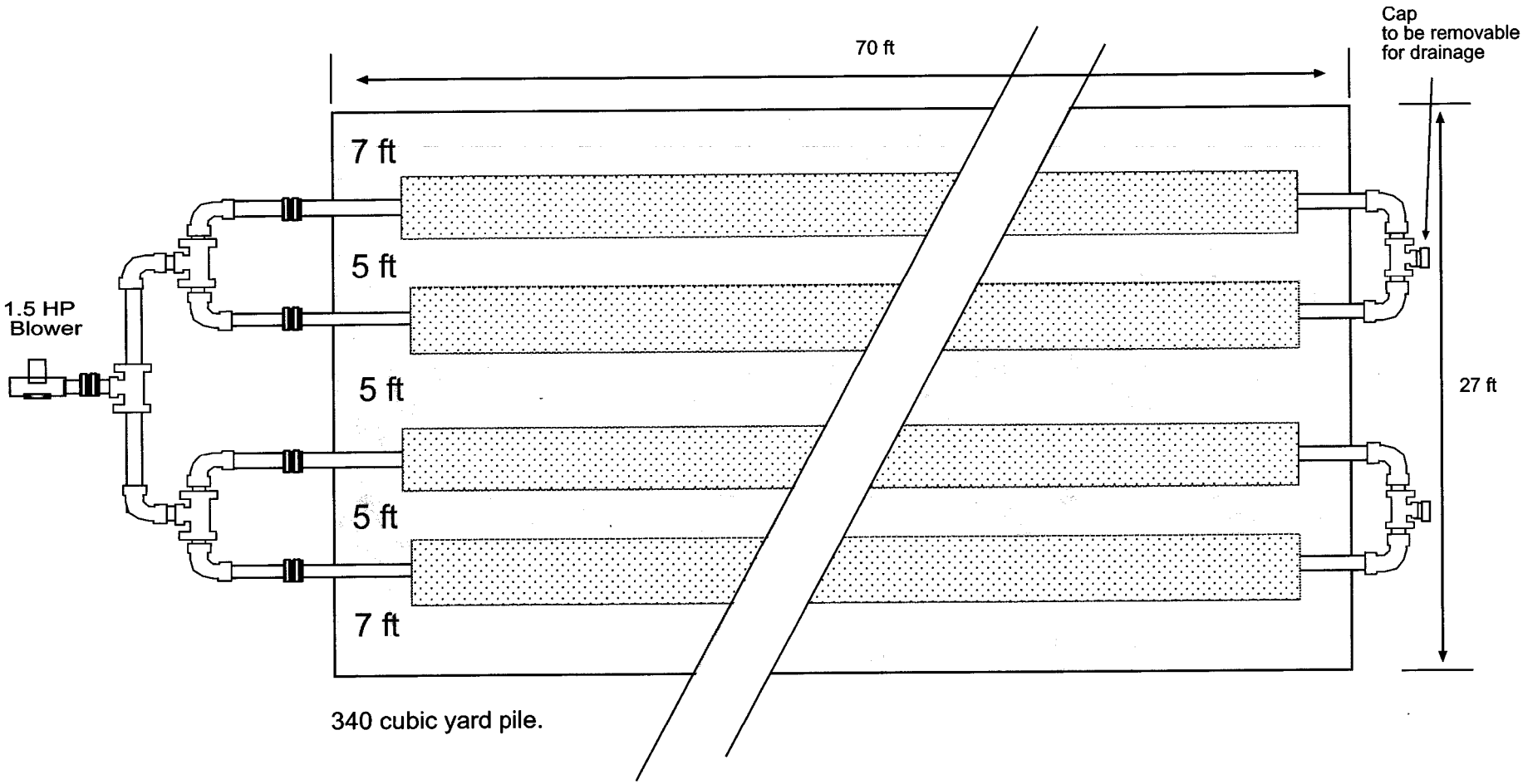

O_2Compost Compost Systems & Training	Reviewed: Peter Moon P.E.	Date: 4/2/12	Aeration Pipe General Single Pile	Drawing No; 2/4
	LanierApril2_12 Harold Ruppert			

Earth Farms Organic Aerated Static Pile Compost System Design

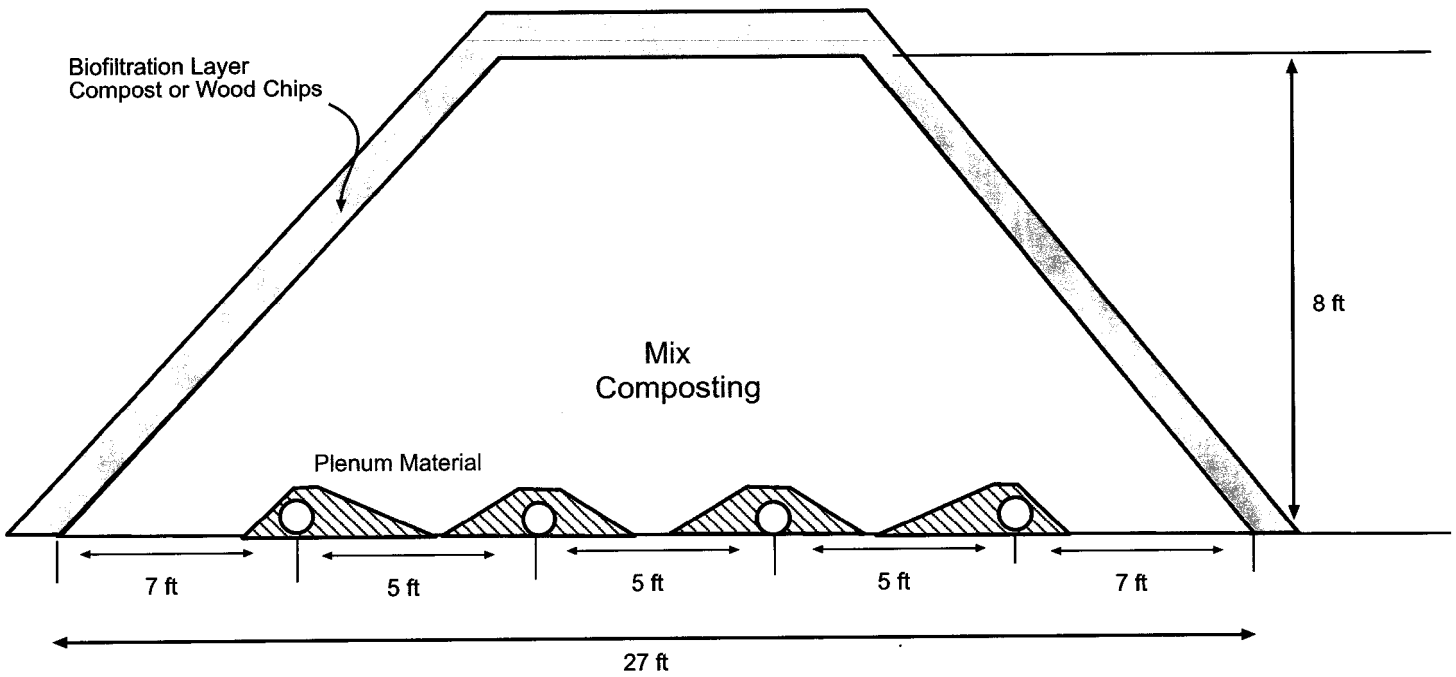

O_2Compost Compost Systems &Training	Reviewed: Peter Moon P.E.	Date: 4/2/12	Aeration Pipe General Single Pile	Drawing No; 3/4
	LanierApril2_12 Harold Ruppert			

Earth Farms Organic Aerated Static Pile Compost System Design

Not to Scale

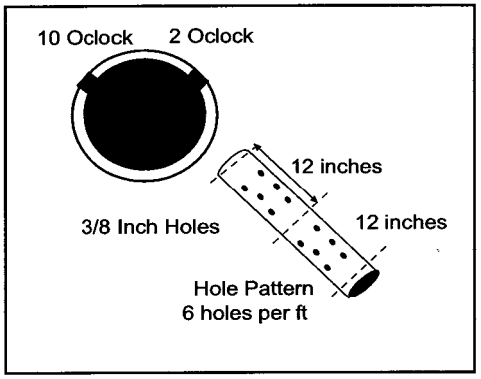

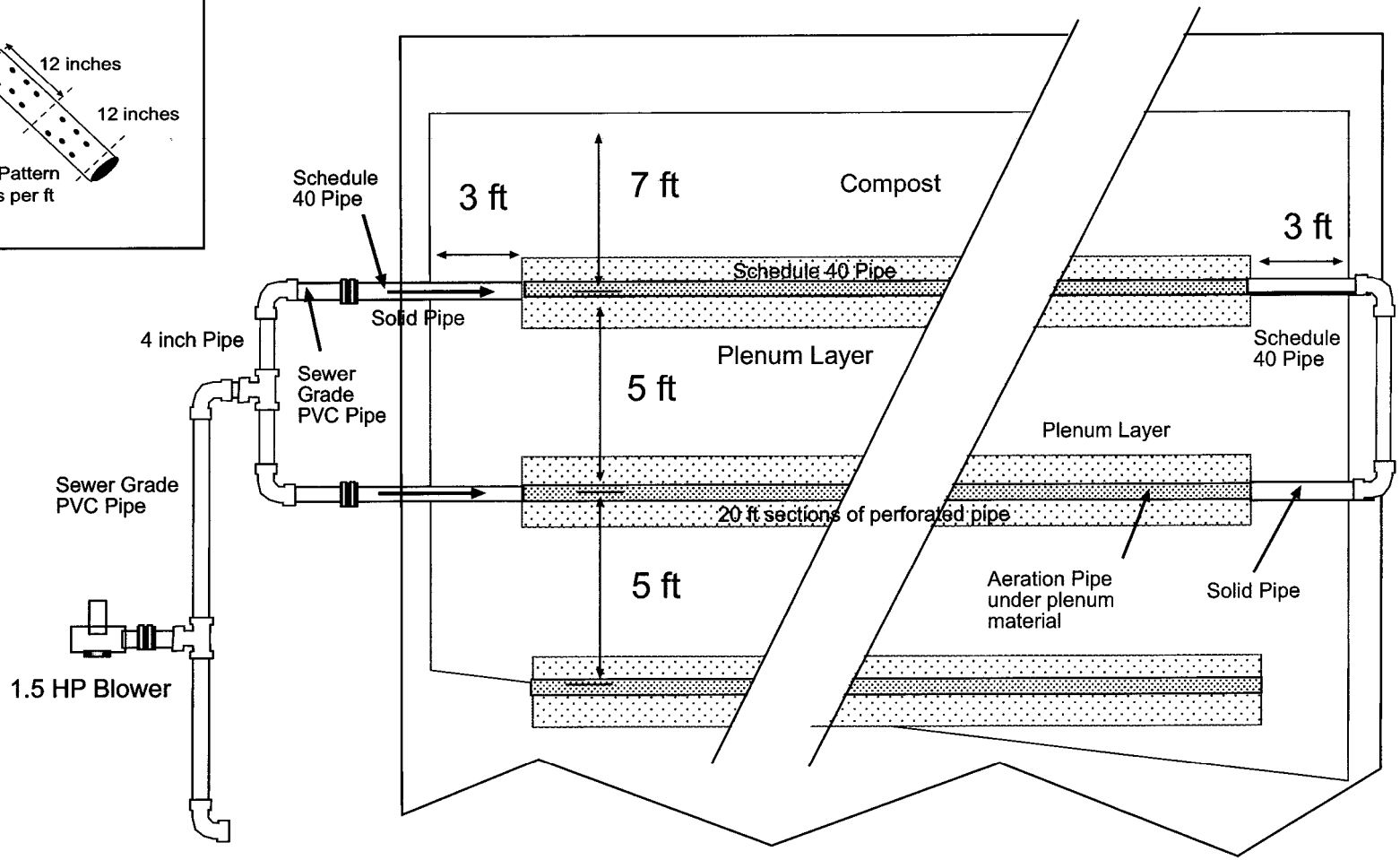

O2Compost Compost Systems & Training	Reviewed: Peter Moon P.E.	Date: 4/2/12	Aeration Pipe Detail
	LanierApril2_12 Harold Ruppert		Drawing No; 4/4

O2Compost
Compost Systems & Training

Technical Memorandum No. 1

Aerated Static Pile Compost Mix Design

The following Technical Memorandum addresses Standard Operating Procedures for developing a compost mix for an Aerated Static Pile (ASP) Compost System.

Table of Contents

Section	Page
Introduction	**1**
Aerated Static Pile Cross Section	**2**
Compost Feedstocks	**3**
New Compost Mix	**4**
Compost Mix Calculator	**6**
Test Compost Mixes	**7**
Mixing Procedures	**8**
Operations Plan	**8**
Appendix A – Determine Pile Bulk Density and Free Air Space	**9**
Appendix B – Tests to Determine Moisture Content	**11**
Appendix C – Safety and Hygiene	**12**

Introduction

Overview

With an Aerated Static Pile (ASP) Compost System, it is important to prepare a new compost mix that meets the following parameters:

1. Carbon to Nitrogen Ratio (C:N)	between 25:1 and 35:1
2. Bulk Density	between 650 – 950 lbs / CY
3. Free Air Space	between 35% and 60%
4. Moisture Content	between 55% and 65%
5. Particle Size Distribution	Well Graded – See Below
6. pH (measure of acidity)	between 6.5 and 8.0

This technical memorandum discusses each of these parameters as well as methods for: 1) calculating the proportions of a desired mix; and 2) preparing a compost mix for this study.

It is important to recognize, however, that composting is a blending of science and art. While it is important to meet initial mix parameters as determined in the laboratory and field, it is equally important to use judgment that can be gained only through operating experience.

Goals and Objectives

The goals of this technical memorandum are to: 1) describe each constituent material in an Aerated Static Pile (ASP) Compost System; and 2) establish a set of standardized procedures for preparing a new compost mix. These goals are the foundation upon which a full scale composting operation will be built.

The primary objective is to evaluate the performance of a new compost mix, and to adjust the mix as necessary to optimize the composting process. Adjusting the mix may include changing the proportions of feedstock constituents, adjusting the moisture content, or modifying the method of mix preparation.

An equally important objective is to always maintain safe working conditions. These are touched on in this Technical Memorandum but should also be discussed in greater detail in the Project Operations Plan.

Aerated Static Pile Cross Section

Not to Scale

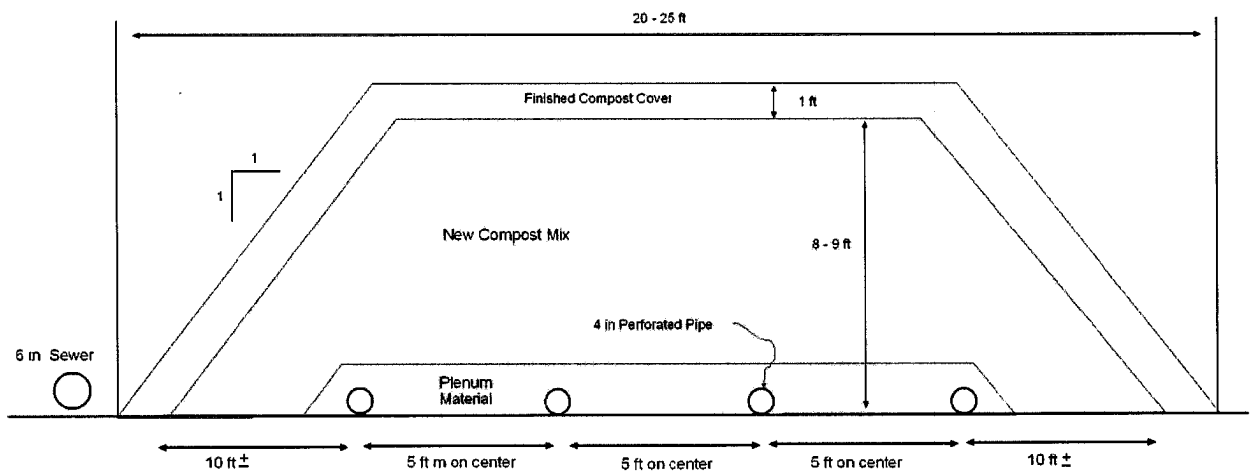

Figure 1 - Cross Section through a Typical 4-Pipe Aerated Static Pile

An Aerated Static Pile includes three types of materials (from bottom to top): 1) plenum material, 2) new compost mix; and 3) finished compost cover, as shown above.

The ***Plenum Material*** consists of clean wood chips or shredded wood with a small proportion of fine material (80% 2-inch, plus). The purpose of the plenum material is to provide free airflow across the base of the pile and to improve the distribution of oxygen through the entire mass of new compost mix. Secondarily, the plenum also allows for drainage of excess water (compost leachate), should it seep out of the new compost mix.

The ***Finished Compost Cover*** consists of approximately 12-inches of unscreened compost from a previous compost batch. This cover layer serves as:

1. An insulating cover that enables the new compost mix to achieve temperatures sufficient to destroy pathogens, parasites and weed seeds (55°C for a minimum of 3-days);
2. A biofilter layer to absorb potentially malodorous gases, reduce VOC emissions and retain nutrients in the compost (primarily Nitrogen compounds);
3. A vector barrier to prevent access to flies, birds, rodents and other nuisance creatures;
4. A moisture barrier so that all of the new mix stays sufficiently wet to sustain biologic degradation of the new compost mix, as it transforms to a finished compost product.

For the biofilter layer to function properly, it is essential that the finished compost cover be kept wet (between 40% - 50%) throughout the active phase of composting (first 21 to 30 days). This may require daily applications of water in arid climates.

The remainder of this Technical Memorandum addresses the ***New Compost Mix***.

Compost Feedstocks

- ***Wet Feedstock Materials*** include scraped raw manure, oils and grease, food waste, fruit pulp and similar materials that have moisture contents considerably greater than 65%. Wet feedstocks are often malodorous and must be handled promptly and efficiently when they are delivered to the compost facility.

- ***Dry Feedstocks*** (i.e., Bulking Agents) are mixed with wet feedstocks to create a mix with: 1) a moisture content of 55% to 65%; and 2) a porosity that is sufficient to allow for uniform airflow through the new compost mix. Dry feedstocks generally consist of woody materials, and include shredded tree limbs, yard debris, cardboard and paper. Large quantities of bulking agents should always be kept on-hand to mix with wet feedstocks to mitigate potential odor impacts. For the purpose of estimating material quantities, a ratio of 3 parts bulking agent mixed with 1 part wet feedstock is often used. Another way of saying this is "A mix ratio of 3:1". Because the wet feedstocks fill the voids in the dry feedstocks, there is typically a 10 to 15% volume reduction with the combined mix. For example, 2 CY of wet manure mixed with 6 CY of wood chips, will yield approximately 7 CY of new compost mix.

- ***Nitrogen Rich Feedstocks*** are substances that have high concentrations of amino acids, proteins and chlorophyll, and include chicken manure, grass clippings, food waste, fish by-products and similar materials. Feedstocks with high Nitrogen content are potentially malodorous and need to be combined with Carbon rich materials to avoid volatizing the Nitrogen as ammonia, mercaptans and other odorous compounds.

- ***Carbon Rich Substrates*** include: 1) carbohydrates (sugars and starches); 2) fats and oils; 3) cellulose; 4) hemicellulose; 5) chitin (e.g., crab shells); and 6) lignin (e.g., wood). Carbohydrates are considered "high energy feedstocks" and breakdown quite readily when matched with appropriate quantities of Nitrogen. Conversely, cellulose, hemicellulose, fats and oils are medium energy feedstocks that breakdown slower. Lastly, chitin and lignin are considered low energy feedstocks and these materials breakdown very slowly, even in an active compost pile.

New Compost Mix

With an Aerated Static Pile (ASP) Compost System, it is important to prepare a new compost mix that meets the following parameters:

1. Carbon to Nitrogen Ratio (C:N)	between 25:1 and 35:1
2. Bulk Density	between 650 and 950 lbs / CY
3. Free Air Space	between 35 and 60%
4. Moisture Content	between 55 and 65%
5. Particle Size Distribution	Small, medium and large particles
6. pH (measure of acidity)	between 6.5 and 8.0

Each of these initial mix parameters are discussed in the following sections of this Technical Memorandum.

Carbon to Nitrogen Ratio

Compostable materials can generally be grouped into two classes: greens (grass, meat and vegetable waste, etc.) and browns (paper products, straw, woodchips, etc. The former group has a low C:N ratio (i.e., high quantities of Nitrogen) and the latter group has a high C:N ratio (comparatively low quantities of Nitrogen). C:N ratios, along with other properties, such as moisture content of different feedstocks, very widely even within those two groups.

Feedstock Categories		
	Browns	**Greens**
Carbon	High	Low
Nitrogen	Low	High
C/N Ratio	High	Low
Moisture	Low to Moderate	High to Moderate
Porosity	High to Moderate	Low to Moderate
Bulk Density	Low to Moderate	High to Moderate
Decay Rate	Slow	Fast
	Tie up nitrogen in soil if not fully composted	Foul odors if poorly aerated
	Best composting occurs when browns and greens are mixed together	

Although the C/N ratio is a useful guide when formulating composting blends, it should only be considered as an indicator. The actual required C:N ratio depends on the biodegradability (availability) of the food source, and the ease with which the C-compounds are decomposed. The degradability of the food source varies between materials with similar C:N ratios. For example, straws and woody material may have similar C:N ratios, but the straw decomposes faster, produces more heat, and releases its carbon to the microorganisms faster than wood material.

Between different substances, the degradability is generally as follows:

simple sugars > starches, cellulose, hemicellulose, proteins > fats and oils > chitin > lignin

Bulk Density and Free Air Space

Bulk density and free air space are both relative measures of porosity of a compost mix, and are affected by: 1) particle size distribution and 2) moisture content. A compost mix with a high bulk density generally corresponds with a low free air space (i.e., low porosity). Conversely, a low bulk density corresponds with a high free air space (i.e., high porosity).

Field tests to determine the bulk density and free air space of a sample are described in Appendix A.

Moisture Content

Water plays a number of important roles within a composting system. It is essential to all life forms, including decomposer organisms. Water is essential for microbial activity and therefore it is also essential for composting.

Composting process microorganisms live predominantly in the water film around and in particles. Water is also the key ingredient that transports substances within a composting mass. Oxygen reaches aerobic microorganisms in water films via gas exchange at the film surface. Gas exchange through water is slower than through air, so excessive water in the compost mix may cause anaerobic conditions because the speed of oxygen supply cannot meet the microorganisms' oxygen demand.

Water also plays a role in regulating temperature in compost systems. Water has a high specific heat, meaning that it takes a large amount of energy to raise the temperature of water. If too much water is present within a compost pile, it will take longer for the temperature of the pile to increase.

Finally, water plays a very important role in absorbing potentially odorous compounds and thereby helps the operator mitigate impacts from odors. For this reason, it is important to keep the finished compost cover wet at all times.

The optimum moisture content in a new compost mix is 55 to 65%. If the moisture content in a compost pile drops below 45%, the composting process will stop altogether.

Two tests for determining the moisture content of a compost mix are presented in Appendix B.

Particle Size Distribution

The particle size of the feedstock will affect porosity, airflow, and the amount of microbial activity. Smaller particles have more surface area per unit volume, and therefore microbes have more surface on which to colonize. However, if particles are too small, porosity will decrease and airflow within the pile will be restricted. A mix of particle sizes creates the most porous pile, which is desirable. When mixing a wet feedstock with a dry bulking agent, the particle size distribution of the bulking agent should be well graded, within the following ranges:

- Less than 0.25 inches 10% to 30%
- 0.25 to 2 inches 20% to 80%
- Greater than 2-inches 20% to 40%

pH Value

The acidity or alkalinity of the organic materials, measured by the pH value, affects the growth of microorganisms. Bacterial decomposers prefer a pH range of 6.0 to 7.5 while fungal decomposers prefer pH range 5.5 to 8.0. If compost pH exceeds 7.5, gaseous losses of ammonia are more likely to occur.

Certain materials such as dairy manure, paper processing waste and cement kiln dust can raise pH, while food processing wastes or pine needles can lower pH.

Usually, at the beginning of the process with a passively aerated compost system (no forced aeration), there is a natural pH shift toward more acidic pH as a result of the formation of organic acids. As composting proceeds, these organic acids are decomposed, and the pH rises as a result of ammonia production from the degradation of proteins. If anaerobic conditions develop during composting, organic acids may accumulate rather than break down, causing the pH to decrease. However, aerating the composting material reduces this acidity. In systems with forced aeration (e.g., this pilot project), there is often no initial pH decrease observed.

Compost Mix Calculator

A compost mix calculator (spreadsheet) can be used to estimate the mix proportions of a test mix. A sample mix calculator is included with this Technical Memorandum, with permission granted by the Washington State University Cooperative Extension Service in Puyallup, Washington.

The Mix Calculator is a spreadsheet that calculates the compost mixture C:N ratio and moisture content, based on the analysis of specific feedstock materials and mix proportions that are selected. The spreadsheet can be used to evaluate the effects of different feedstock mixtures on C:N ratio and moisture content of the initial pile. It can also be used to determine how much additional water needs to be added to meet the moisture requirements. Finally, the mix calculator can be used to check if the materials that are on-hand will make a suitable mix for composting, or if additional feedstocks need to be obtained to produce a desired new compost mix.

The spreadsheet consists of three different worksheets. The first is a list of typical feedstock characteristics taken from the "On-Farm Composting Handbook (Rynk, et al, 1992) and from data collected by WSU staff. The second page is the compost mixture in-put sheet where data is entered for the respective feedstocks to derive a calculated mixture. The third page does the calculations to make the calculator operate, and is locked to prevent change.

Red Text data on the second page is entered for respective feedstocks, based on laboratory tests or information provided in the feedstock list. **Black Text** shows the calculated results. The spreadsheet calculates the moisture content and C:N ratio of the proposed compost mix, as new data is provided. Mixtures are calculated on a volume basis, not by weight.

Test Compost Mixes

The compost mix calculator is a quick and easy tool to use when planning a pilot test project, however it should be followed up with preparation of actual test mixes to confirm the suitability of the proposed mix. This can be done in the field using a bucket, wheel barrow and hand tools.

When preparing a test mix, a 20 liter bucket or a wheel barrow can be used as the unit of measure. For example, when mixing 1-part wet manure with 3-parts bulking agent, the operator could combine one wheel barrow of wet manure with 3 wheel barrows of wood chips or shredded yard debris.

When the test mix has been prepared, it can be further tested using field tests for bulk density, free air space and moisture content, as detailed in Appendix A and Appendix B. Samples can also be obtained for laboratory testing to confirm the C:N ratio, moisture content, particle size distribution, etc.

Larger volumes of a test mix can also be prepared and placed in a cylinder of wire fencing material to contain the mix. To accomplish this, a section of welded wire fencing material that measures 15-feet long and 3-feet high can be wrapped around into a free standing cylinder, resulting in a volume of 2.5 CY. The mix can be place in the cylinder, spreading it out to the perimeter as the height increases, resulting in a stable freestanding test batch.

A test cylinder of this type can be composted either: 1) statically, 2) with passive aeration or 3) with induced airflow through the mix to simulate actual composting conditions. The surface area to volume ratio is high with a small cylinder such as this, however the core of the pile will generally reflect actual composting conditions as seen in a larger pile.

In addition to evaluating the text mix composition, this process will also provide experience with the specific materials, including the logistics of bringing these materials together and mixing them into a test mix. As stated previously, composting is a blending of science and art. Test mixes such as described above provide direct experience for the operator and will greatly facilitate the learning process.

Mixing Procedures

Compost mixes are prepared on a volume basis, using tools and equipment that are appropriate for the scale of operation. With test mixes, buckets and wheel barrows are typically used, however with pilot scale and full scale operation, a front end loader is the preferred equipment for handling large volumes of material efficiently and effectively.

When combining wet feedstocks with dry feedstocks, it is important to place the wet materials on top of the dry, and then to blend these together with a turning and shearing action. The following types of equipment are often used for this purpose.

- Test Mix – Wheel Barrow and shovel for measuring volumes and blending
- Front-End Loader for measuring volumes and for blending
- Manure Spreader for blending
- Compost Mixers for blending
- Windrow Turner for blending

Example 1: A certain front-end loader bucket can carry a volume of 2 CY when full to water level with wet manure and a volume of 3 CY when heaped with bulking agent. For a design mix ratio of 3:1 (bulking agent to wet manure), the loader operator could place 8 bucket loads of bulking agent (24 CY) on a concrete pad, approximately 12-inches deep. Following this, he would then place 4 bucket loads of wet manure (8 CY) on top of the bulking agent, spreading it out to roughly 6-inches deep.

The operator would then blend the two components together with the front end loader, lifting and spilling the mix repeatedly until a thorough mix is achieved. Alternatively, he could partially mix the two components together and then blend them more thoroughly with a manure spreader, compost mixer or a windrow turner, each with a much higher shearing action than the loader alone.

Once blended, the mix would be added to the Aerated Static Pile and the procedure would be repeated to create a pile with the desired volume.

Example 2: Where the mix consists of one primary constituent such as landscaping debris, there may be some heterogeneity of the raw feedstocks, but no other material is added to the mix. In this case, the compost mix may be prepared as part of the grinding or shredding process, alternately selecting green materials (grass) and brown materials (tree limbs and leaves). This process will require some operator experience for balancing volumes of green and brown components.

Most grinders have a conveyor discharge in which case the grinder may be oriented such that it discharges directly onto the pile. Alternatively, a separate conveyor may be used to discharge the prepared mix directly onto the pile. As the mix is discharged onto the pile, water may be added by using a spray bar or a direct stream of water from a high volume hose pointed toward the top of the conveyor.

Appendix A

Determine Pile Bulk Density and Free Air Space

The procedures for measuring pile bulk density simulate the compaction of materials one would expect under normal composting operations. Dropping the bucket 10 times from a given height helps to keep the measuring process consistent.

Volume of a Bucket

To determine the volume of a plastic bucket for the bulk density and free air space tests, complete the following four steps:

1. Weigh the empty bucket and record it's weight (lb).
2. Fill the bucket to the top with water, weigh and record the weight (lb).
3. Subtract the weight of the bucket to determine the weight of water.
4. Divide the weight of water by 8.35 lbs / gallon to determine the volume of the bucket.

Example: A bucket that holds 41.75 pounds of water has a volume of 5 gallons.

Bulk Density

To determine the bulk density (unit weight) of an individual feedstock or a compost mix, complete the following seven steps:

1. Fill a 5-gallon bucket 1/3 full with material;
2. Raise the bucket approximately 6-inches above firm surface and let it drop 10 times. This will compact the material to reflect actual field conditions;
3. Fill the bucket 2/3 full with material; raise it 6-inches and drop 10 times;
4. Fill the bucket to the top with material; raise it 6-inches and drop 10 times;
5. Fill the bucket to the top (water level) and weigh;
6. Subtract the weight of bucket and record weight;
7. For a 5-gallon bucket, multiply the compacted weight by 40 to determine the bulk density of one cubic yard (CY).

The target range for the compost mix is between 650 lbs / CY and 950 lbs / CY.

Example: The compacted material weighs 20-pounds. The bulk density of this material is (20-lbs x 40) = 800 lb / CY. This material is within the desired range.

Free Air Space

Use the same full bucket from the bulk density test to complete the free air space test. This test uses water to approximate the amount of voids (free air space) in a bucket full of compost materials as an indirect measure of porosity. Complete the following five steps:

1. Place the bucket of material on level ground;
2. Fill the bucket with water completely without overflowing;
3. Weigh the filled bucket. Use caution – the bucket will be heavy;
4. Record the weight and calculate the volume of water in the bucket.
5. Calculate the percentage of voids.

The target range for free air space for compost piles is 35% to 60%

Example: The bucket with compost and water weighs 36 pounds. Given the weight of material in the bucket was 20 pounds, the weight of water is 36 pounds – 20 pounds = 16 pounds. Therefore, 16 pounds of water = 1.92 gallons, and 1.92 gallons / 5 gallons = 38% free air space. This sample is slightly above the minimum target value, and should provide adequate porosity for aeration.

In this example, additional bulking agent (comprised of coarse woody material) could be added to increase the free air space to enhance the porosity for aeration.

Appendix B

Tests to Determine Moisture Content

Laboratory Test

1. Weigh an oven proof container to determine its tare weight
2. Place a small sample in the container and weigh it
3. Subtract the tare weight to determine the wet weight of the sample
4. Dry the sample in an oven at 220°F for 24 hours
5. Weigh the dried sample and subtract the tare weight
6. Determine the moisture content of the sample using the following equation:

Moisture Content (%) = (Wet Weight – Dry Weight / Wet Weight) x 100

Procedures for the Hand-Squeeze Test

7. Reach into a pile (bucket) and grab a handful of compost mix
8. Squeeze the material very tightly; check for drips of water
9. Release your grip and allow the material to stay in your hand, smear some between finger and thumb;
10. Inspect material and your hand;
11. Use "Rules of Thumb" for Estimating Moisture (see below).

"Rules of Thumb" for Estimating Moisture	
Observations	% Moisture (Estimate)
Material feels very dry and dusty	42% or less
Material feels mostly dry with a hint of moisture	42% – 47%
Material feels tacky and sticks together	47% - 52%
Material feels moist, but no water comes out when squeezed	52% - 58%
Material leaves a wet sheen on hand	58% - 63%
One or two drops of water come out, bead of water between fingers	63% - 68%
Many drops of water come out during squeezing	68% - 73%
Stream of water from material when squeezed or pudding texture	73% or more

Appendix C

Safety and Hygiene

Feedstock Handling Safely

While working with raw compost feedstocks, it is important to remember the following:

- Do not eat or drink while working with raw feedstock materials
- Do no smoke, to avoid hand to mouth transmission of contaminants and disease causing organisms;
- Do not rub your eyes or pick your nose

- Do wear gloves, especially when handling raw manures and food waste
- Do wash hands thoroughly after field work
- Do wash your face, forearms, fingernails and back of hands – thoroughly
- Do clean off boots before reentering public office areas

Personal Protective Equipment

- Rubber gloves and work gloves
- Boots
- Overalls
- Masks or respirators for enclosed areas
- Hearing protection
- Safety glasses
- Radio communication

Heavy Equipment

- Heavy equipment is dangerous and can lead to accidental injury or death
- Maintain eye contact with equipment operator
- Use hand signals to communicate your intentions

Gallagher, Tony

From: Gallagher, Tony
Sent: Wednesday, August 22, 2012 9:00 AM
To: 'Jim Lanier'
Subject: RE: AEREATED STATIC PILE DEMONSTRATION

Jim,

After consulting Michael Scott, I need to address a couple of items. First your demo proposal for your static aerated pile was
very through. I just have a couple of items that need to be address. I need a site map (it can be hand drawn) faxed or emailed to me
showing me exactly where the aerated static pile will be located on your property. Next in looking at your "Volume of Feedstock" which is located on the
document you sent me based on the nitrogen to carbon that you show that you will be receiving such as;

Salad Residual 60 tons per day
Grease Trap 30 tons per day
Breaded Chicken 15 tons per day
Wood residual 105 tons per day

does not seem to calculate out to the C:N of 34 as your show on your document can you explain this a little more?

Thanks

M.A. (Tony) Gallagher, Supervisor
Composting & Land Application Branch
Solid Waste Section
phone/fax (919)707-8280

E-mail address - tony.gallagher@ncdenr.gov

http://portal.ncdenr.org/web/wm/sw/septage

E-mail correspondence to and from this address may be subject to North Carolina public records law and may be disclosed to third parties.

From: Jim Lanier [mailto:Jim@stanleyenviro.com]
Sent: Tuesday, August 21, 2012 1:45 PM
To: Gallagher, Tony
Subject: RE: AEREATED STATIC PILE DEMONSTRATION

Thanks,

Jim Lanier, President
Stanley Environmental Solutions Inc.
Earth Farms Organics

704-263-8186 (office)
704-860-5534 (cell)
Earthfarms.com
Stanleyenviro.com

Romans 10:13
Follower Of One!!

stanley environmental solutions

earth farms ORGANICS
COMPOST & TOPSOIL PRODUCTS

From: Gallagher, Tony [mailto:tony.gallagher@ncdenr.gov]
Sent: Tuesday, August 21, 2012 1:42 PM
To: Jim Lanier
Subject: [[SPAM]] RE: AEREATED STATIC PILE DEMONSTRATION

Jim,

I am working on a few other compost permits and will be working on your demo letter but need to touch base with Michael.
You, had asked me about using soapy water on your windrows which would be separate from your aerated static pile. I may have a few more follow-up questions
that may need to be answered before I could sign off which I will send you shortly.

Thanks

M.A. (Tony) Gallagher, Supervisor
Composting & Land Application Branch
Solid Waste Section
phone/fax (919)707-8280

E-mail address - tony.gallagher@ncdenr.gov

http://portal.ncdenr.org/web/wm/sw/septage

E-mail correspondence to and from this address may be subject to North Carolina public records law and may be disclosed to third parties.

From: Jim Lanier [mailto:Jim@stanleyenviro.com]
Sent: Tuesday, August 21, 2012 1:12 PM

To: Gallagher, Tony
Subject: AEREATED STATIC PILE DEMONSTRATION

Tony,

Do you have the Demonstration Permit ready yet, we would like to get this started as soon as possible.

Thank You,

Jim Lanier, President
Stanley Environmental Solutions Inc.
Earth Farms Organics
704-263-8186 (office)
704-860-5534 (cell)
Earthfarms.com
Stanleyenviro.com

Romans 10:13
Follower Of One!!

stanley environmental solutions

earth farms ORGANICS
COMPOST & TOPSOIL PRODUCTS