H. Lowry Tribble, Jr., P.E.
William F. Hodges, P.E.
W. Michael Stubbs, P.E.
R. Brant Lane, P.E.
Clint L. Courson, CHMM
K. Matthew Cheek, P.E.
Daniel E. Cheek, P.E.

HHNT
Hodges, Harbin, Newberry & Tribble, Inc.
Consulting Engineers

Nathan D. Dunn, P.E.
Kevin G. Berry, P.E.
Ryan S. Willoughby, P.E.

Permit No.	Scan Date	DIN
0803-MSWLF-1993	**December 7, 2012**	**17847**

December 6, 2012

RECEIVED
December 6, 2012
Solid Waste Section
Asheville Regional Office

Mr. Larry Frost
Regional Engineer
NC Department of Environment & Natural Resources
Asheville Regional Office
2090 U.S. Hwy. 70
Swannanoa, NC 28778

APPROVED DOCUMENT
Division of Waste Management
Solid Waste Section
Date **February 20, 2013** By **LY Frost**

Re: East Carolina Regional Landfill
Permit No. 08-03
Request for Demonstration Project – Replacement Document
Bertie County
HHNT Project No. 6703-260-01

Dear Mr. Murray:

On behalf of Republic Services of North Carolina, LLC, and the East Carolina Regional Landfill, we request approval for a demonstration project to include: the protective cover system over the base liner be changed from the currently permitted 24 inch thick system to a 12 inch thick protective system. This 12 inch thick protective system will include a 12 ounce per square yard (osy) geosynthetic cushion installed on top of the FML and then a 12 inch thick layer of permeable media of either sand or gravel. By utilizing the geosynthetic cushion fabric, the protection of the base liner FML will be equal to or more protective than the 24 inch thick protective cover system. Listed below are the methods that will be included for demonstration of this system.

Protection of the FML During Construction

1. The protective cover system will include a 12 osy cushion geotextile which will be fully sewn or welded together over the FML. This cushion geotextile exceeds the need for simple cushioning for the protective cover media. This thicker than usual geotextile will fully replace the protective value of the 12 inches of permeable media being eliminated from the protective cover system.
2. The CQA Plan will be revised to require extra care of the FML during construction. Additionally, when more than one low ground pressure dozer is operating on the FML and geotextile cushion fabric spreading permeable media, an additional CQA technician will be on-site to witness the work and assure the FML is protected. (see attached Red Line version of the revised CQA Plan and the Technical Specifications which include enhancements to better protect the FML).
3. The CQA Plan will include a geomembrane leak location survey after placement of the granular protective cover material.

4. The CQA Plan will be revised to require photo coverage of the protective cover system during and after installation. These photographs will be made part of the CQA report for the respective cell under construction.
5. The gravel leachate collection column will remain 24 inches thick and will have a minimum width of 10 feet at the top of the column. This will protect the leachate collection pipes under the eventual full waste loading to prevent excessive stress in the pipe and will insure continued leachate collection and removal from the liner.
6. Any supplemental leachate collection pipes (e.g., 4-inch diameter HDPE perforated leachate lateral pipes) will have a 24" thickness of protective cover material to protect them.

Protection During Initial Waste Placement

1. Prior to spreading or placement of any waste in the cell area over the alternative protective cover system, the Project Engineer will provide training to the facility operators on placement of waste in the fluff layer to assure the protective cover system is properly maintained. A record of this training will be placed in the facility operating record. This training will take place on every cell with the alternative protective cover system as it is opened for waste disposal. (See attached training program outline)
2. Photos showing the initial waste placement will be taken demonstrating the fluff lift placement with dozers and not steel wheel compactors.

Effectiveness of Leachate Collection System

1. A demonstration by Republic Services that the leachate collection system will maintain head on the liner of less than 12 inches in depth shall be provided for each cell, either in the Permit to Construct Application or at the time of Cell Construction. This demonstration will utilize the HELP Model with the specifications of the site's actual protective cover media used for that cell. This will assure that on a cell-by-cell basis, the effectiveness of the leachate collection system is demonstrated.

Appropriateness of the Operator Training and Demonstration of Training

1. The Operation Plan for the facility will be revised to include the minimum training requirements for the initial waste placement training. This training will be accomplished during waste being placed in each cell (see Training Program Outline).
2. The Project Engineer will provide a summary report of the training and this report will be placed in the facility operating record as a demonstration of the training prior to waste placement (see attached version of the revised Operation Plan).

Appropriateness of CQA

1. The CQA Plan and Technical Specifications have been revised to account for this revised protective cover system and the geomembrane leak location survey. Copies of the revised documents have been included with this request and it is our professional opinion these are appropriate to assure proper performance of the system.

Demonstration Report

1. At the conclusion of cell construction, which includes the placement of protective cover material, a report on this demonstration will be submitted to the Solid Waste Section within 90 days.

We appreciate your consideration of this request for a demonstration project, and we look forward to your review for approval. Should you have any questions, please call.

Sincerely,

HODGES, HARBIN, NEWBERRY & TRIBBLE, INC.

William F. Hodges, P.E.
Professional Engineer

K. Matthew Cheek, P.E.
Professional Engineer

WFH/dk

cc: Ed Mussler, III, P.E.
Ray Hoffman, P.E.
Matt Einsmann, P.E.

SPECIFICATIONS AND CONTRACT DOCUMENTS

CONSTRUCTION OF CELL NO. 13
EAST CAROLINA REGIONAL LANDFILL
BERTIE COUNTY, NORTH CAROLINA
PERMIT NO. 08-03

FOR

REPUBLIC SERVICES OF NORTH CAROLINA, LLC

DECEMBER 2012

Permit No.	Scan Date	DIN
0803-MSWLF-1993	**December 7, 2012**	**17847**

RECEIVED
December 6, 2012
Solid Waste Section
Asheville Regional Office

APPROVED DOCUMENT
Division of Waste Management
Solid Waste Section
Date **February 20, 2013** By **LY Frost**

HHNT
HODGES, HARBIN, NEWBERRY & TRIBBLE, INC.
Consulting Engineers

NORTH CAROLINA PROFESSIONAL SEAL 16146 ENGINEER WILLIAM F. HODGES

NORTH CAROLINA PROFESSIONAL SEAL 32249 ENGINEER K. MATTHEW CHEEK

NC Corp. License No. C-0813
© Republic Services, Inc. (2012)

3920 Arkwright Road, Suite 101 | Macon, Georgia | Phone: (478) 743-7175 | Fax: (478) 743-1703

SPECIFICATIONS AND CONTRACT DOCUMENTS

CONSTRUCTION OF CELL NO. 13
EAST CAROLINA REGIONAL LANDFILL
BERTIE COUNTY, NORTH CAROLINA
PERMIT NO. 08-03

FOR

REPUBLIC SERVICES OF NORTH CAROLINA, LLC

DECEMBER 2012

TABLE OF CONTENTS

I. Supplementary Conditions

II. Technical Specifications

01050	Confirmation Surveys **(Not in this Contract)**
01400	Quality Control
02255	Protective Cover – On Liner – Sandy Soils
02747	Leachate Collection System
02750	HDPE Geomembrane Liner **(Not in this Contract)**
02757	Cushion Geotextile **(Not in this Contract)**
02760	Geomembrane Leak Location Survey for Single Geomembrane Covered with Granular Materials **(Not in this Contract)**

III. CQA Plan

IV. Operation Plan

V. Training Program Outline

VI. Details

I

SUPPLEMENTARY CONDITIONS

VII

SUPPLEMENTARY CONDITIONS

CAPITALIZED TERMS USED, BUT NOT OTHERWISE DEFINED, HEREIN SHALL HAVE THE MEANINGS GIVEN TO SUCH TERMS IN THE GENERAL CONDITIONS.

1. THE GENERAL CONDITIONS: The General Conditions shall apply to all Work as set forth in the Contract Documents, except as otherwise specified in these Supplementary Conditions. Requirements of these Supplementary Conditions supersede those of the General Conditions.

2. CONSTRUCTION DRAWINGS: The Work shall conform to the following construction drawings:

CONSTRUCTION OF CELL NO. 13

SHEET NO.	DESCRIPTION
-	Title Sheet
1	Existing Topographic Survey
2	Construction Stakeout Plan
3	Top of Clay Liner Grading Plan
4	Leachate Collection Plan
5	Erosion Control Plan
6-8	General Construction Details
9	Sediment Basin No. 4 – Grading Plan & Details
10	Tripp Property Borrow Area Expansion - Grading

3. REPORTS AND DRAWINGS USED BY ENGINEER: In the preparation of Drawings and Specifications, ENGINEER has relied upon:

   A. The following reports of explorations and tests of subsurface conditions at the site of the Work:
   (1): None

   B. The following drawings of physical conditions in or relating to existing surface and subsurface structures (except Underground Facilities) which are contiguous to the site of the Work:
   (1): Project Plans

4. EXTENSION OF TIME AND PROJECT SCHEDULE: Any and all extensions of time shall be in accordance with the General Conditions, except as otherwise hereinafter provided. **A project schedule shall be supplied at notice-to-proceed and shall be updated twice monthly throughout construction.**

5. LIQUIDATED DAMAGES: If the Project is not completed on or before the Scheduled Completion Date, the CONTRACTOR shall pay to the OWNER, as liquidated damages, the sum of $5,000.00 per day until the Project is complete. As OWNER'S actual damages if the Project is not completed on or before the Scheduled Completion Date would be difficult, if not impossible, to determine, such liquidated damage amount represents the parties' best estimate of the amount of the damages that the OWNER would suffer in such a

circumstance. The OWNER shall have the right to deduct and withhold the amount of any and all such damages from any monies owing by it to the CONTRACTOR or the OWNER may recover such amount from the CONTRACTOR and the sureties on its bond; all of such remedies shall be cumulative, and the OWNER shall not be required to elect any one remedy nor be deemed to have made an election by proceeding to enforce any one remedy.

6. IDENTITY OF SUBCONTRACTORS: Specify here whether CONTRACTOR must identify the Subcontractors, Suppliers, and other persons and organizations that it will use in the performance of the Work, and, if so, the date by which such identification must be submitted to OWNER

_____

_____

_____

_____

7. SANITARY CONVENIENCES: The CONTRACTOR shall provide adequate sanitary conveniences for use of those employed on the work and their use shall be strictly enforced. Such conveniences shall be made available when the first employees arrive on the site and shall be removed after the departure of the last employees from the job.

8. UTILITY SERVICE: The CONTRACTOR will arrange for temporary electrical service through the local agency at his own expense if CONTRACTOR desires electrical power on-site.

9. ENVIRONMENTAL IMPACT: The CONTRACTOR shall conduct all operations so as to minimize, to the greatest extent possible, adverse environmental impact.

   a. Noise: All equipment and machinery shall be provided with exhaust mufflers maintained in good working order so as to reduce operating noise to minimum levels.

   b. Dust/Smoke: All equipment movements shall be accompanied by a minimum of dust. Traveled surfaces and earthwork shall be maintained in a moist condition to avoid the generation of dust or the airborne movement of particulate matter under all prevailing atmospheric conditions.

      Burning operations will be conducted only with written permission of the OWNER and/or appropriate regulatory agencies. The CONTRACTOR shall be responsible for obtaining all permits and comply with all codes, ordinances and regulations pertaining to the burning. Approval from the Solid Waste Section is also required.

   c. Traffic: Trucks shall be routed over roads which will result in the least effect on traffic and nuisance to the public. All material shall be loaded in a manner which will preclude the loss of any portion of the load in transit, including covering, if necessary.

   d. Sedimentation: All points of concentrated runoff from rainfall shall be visually monitored to determine that no eroded material from the construction site is being deposited off-site. Measures shall be taken to promptly eliminate such a deposition if occurring, including the installation of sedimentation basins.

e. Fuel and Lubricant Spills: All spills shall be removed from the site immediately by the CONTRACTOR. No residue from the spill shall remain on site.

10. ADJUSTMENT OF DISCREPANCIES: In all cases of discrepancies between the various dimensions and details shown on drawings, or between the drawings and these specifications, the more expensive construction shall be estimated before construction is started, the matter shall be submitted to the ENGINEER for clarification. Without such a decision, discrepancies shall be adjusted by the CONTRACTOR at his own risk and in settlement of any complications arising from such adjustment, the CONTRACTOR shall bear all of the extra expense involved.

11. MAINTENANCE DURING CONSTRUCTION: The CONTRACTOR shall maintain the Work from the beginning of construction operations until final acceptance. This maintenance shall constitute continuous and effective work prosecuted day by day with adequate equipment and forces to the end that the site and structures thereon are kept in satisfactory condition at all times, including satisfactory signing or marking as appropriate and control of traffic where required by use of traffic control devices as required by the State in which this project is located.

    Upon completion of the Work, the CONTRACTOR shall remove all construction signs and barriers before final acceptance.

    While undergoing improvements, the roads shall be kept open to all traffic by the CONTRACTOR. The CONTRACTOR shall keep the portion of the site being used by public traffic, whether it be through or local traffic, in such condition that traffic will be adequately accommodated. The CONTRACTOR shall bear all cost of signs and markings as required and other maintenance work during construction and before the Work is accepted and of constructing and maintaining such approaches, crossings, intersections, and other features as may be necessary without direct compensation. The Contractor shall provide all drainage protection at adjacent cell edges. This is to be installed and maintained at the Contractor's expense.

12. ACCESS FOR INSPECTION: Access for inspection shall be provided for representatives of the State of North Carolina.

13. RETAINAGE OF CONTRACTOR'S PAYMENT: The retainage shall be an amount equal to 10% of Contractor's partial pay estimate until 50% of the work has been completed. At 50% completion, further partial payments shall be made in full to the CONTRACTOR and no additional amounts may be retained unless the ENGINEER certifies that the job is not proceeding satisfactory, but amounts previously retained shall not be paid to the CONTRACTOR. At 50% completion or any time thereafter when the progress of the WORK is not satisfactorily, additional amounts may be retained but in no event shall the total retainage be more than 20% of the value of the work completed. Upon substantial completion of the work, the amount retained may be paid to the CONTRACTOR. When the WORK has been substantially completed except for WORK which cannot be completed because of weather conditions, lack of materials, or other reasons which in the judgement of the OWNER are valid reasons for non-completion, the OWNER may make additional payments, retaining at all times an amount sufficient to cover the estimated cost of the WORK still to be completed.

Partial pay estimates may include stored materials. Contractor must submit invoices and all materials must be located at the site of the work. Retainage will not be held on stored materials.

14. USE OF CHEMICALS: All chemicals used during project construction or furnished for project operation, whether herbicide, pesticide, disinfectant, polymer, reactant or other classification, must show approval of either EPA or USDA. Use of all such chemicals and disposal of residues shall be in conformance with instructions.

15. CLEANING UP: The contractor shall remove from the Owner's property and from all public and private property, at his own expense, all temporary structures, signs, rubbish, and waste. Also, any sediment deposited in the sediment pond by these activities shall be removed by the Contractor at his expense.

16. GUARANTEE: Notwithstanding anything to the contrary in this contract, the contractor shall guarantee the work, including the equipment installed under this contract, to be free of defects or faulty workmanship or materials for a period of one (1) year from the date of final acceptance. The Contractor shall be required to repair at his own expense all such defects which may develop during the specified time.

17. CONFIRMATION SURVEYS: The Owner will provide the services of a Registered Land Surveyor in accordance with Section 01050 - Confirmation Surveys to perform confirmation surveys. The Owner will order the Surveyor to the site when notified by the Contractor. For each Confirmation Survey, the Owner will pay the Surveyor for two trips to the site. Additional trips required to complete the confirmation surveys will be back-charged to the Contractor. The Surveyor will perform one complete confirmation survey on each trip and shall not be held on-site by the Contractor for corrective measures. Surveys required beyond what is specified due to defective or incomplete work shall be backcharged to the Contractor.

18. ACCESS ROAD DAMAGE: Any damage to the site access roads caused by the Contractor shall be repaired by the Contractor.

19. SEDIMENT POND CLEANUP: Any sediment deposited to the facility's sediment ponds by the work performed under this contract shall be removed by the Contractor before completion of work.

20. GRAVEL OR SAND STOCKPILE: Protective cover gravel or sand will be placed in the stockpile area. It will be the responsibility of the contractor to maintain the stockpile area during construction. The location of the stockpile area must be coordinated and approved by the OWNER prior to material delivery to the site.

21. LINER TIE-IN: The Contractor shall be responsible for exposure of the liner at all existing cell areas for tie-in by the liner subcontractor. Additionally, the contractor will be responsible for all stormwater / erosion control at the tie-in. Payment for this work shall be included in the cost for clay liner construction. All transportation and disposal fees for any storm water that enters the Owner's leachate collection system as a result of the Contractor's failure to control storm water at the tie-in will be back-charged to the Contractor.

22. UNSUITABLE SOIL STOCKPILE: Unsuitable soil materials shall be stockpiled on site within 900' of the cell construction at a location to be determined by the Owner.

23. BORROW AREA: Clay liner materials are available in the borrow area. Slopes shall be left neat and uniform at the completion of work by Contractor in the borrow area. At conclusion of the project, Contractor shall ensure positive drainage in the borrow area.

24. MOBILIZATION: Mobilization will be paid as follows; Pay Estimate No. 1 - 50%, Pay Estimate No. 2 - 25%, and Pay Estimate No. 3 - 25%.

25. QUANTITIES: The quantities on the bid form are an estimate and they may vary up to 25% without the Contractor being allowed to request changes to the unit rates.

26. ENGINEER / DESIGN ENGINEER: The "DESIGN ENGINEER" identified in the technical specifications and CQA Plan is the "ENGINEER" identified in the contract documents.

27. CONTRACTOR: The CONTRACTOR shall unload all geosynthetics at no costs to the OWNER and store them in an area designated by the OWNER. The CONTRACTOR shall divert stormwater away from this location and avoid damage to the geosynthetics. Any damage to the geosynthetics caused by the CONTRACTOR shall be the responsibility of the CONTRACTOR at no cost to the OWNER.

28. CONSTRUCTION WATER: Construction water will be provided to the Contractor at no cost at the well site near the facility entrance. Water may also be obtained by the contractor from on-site ponds at his expense with his own equipment.

29. GEOSYNTHETICS INSTALLATION: The time allowed for construction of this project shall include 14 days for the geosynthetic liner installer (by others) to install the FML and the geotextile fabric. The Contractor shall maintain the surface of the clay liner during the installation of the FML.

30. MAINTENANCE OF STOCKPILES: The Contractor shall be responsible for maintaining construction stockpiles of sand and stone from the time he mobilizes to the site. The Contractor shall have appropriate equipment available to push-up the stockpiles as materials are received.

31. WORKING HOURS: The Contractor may work outside of normal landfill operating hours. However, the Contractor shall be responsible for total site security when working outside of normal landfill operating days and hours.

32. LEAK LOCATION SURVEY: The owner will retain the services of a firm to perform a geomembrane leak location survey to be performed following substantial completion of the installation of the minimum 12" thick layer of protective cover and leachate collection system. The contractor shall be responsible for construction of an isolation strip around the outside edge of the protective cover, exploration of suspected leak locations to expose the geomembrane and/or geotextile for repair, backfill and regrading of the protective cover at all exploration locations and the isolation strip at the completion of the leak location survey. The contractor is not responsible for the cost associated with any required geomembrane and geotextile repairs performed by the liner installer detected by the leak location survey, not caused by contractor actions.

-- END OF SECTION --

II

TECHNICAL SPECIFICATIONS

SECTION 01050

CONFIRMATION SURVEYS
(NOT IN THIS CONTRACT)

PART 1 GENERAL

1.01 GENERAL

This section covers the confirmation surveys required for the project. Landfill confirmation surveys are required for the cell subgrade, the liner system components, all leachate system and underground pipelines and electrical, structures, roads and other improvements. This will require four (4) separate topographic surveys of the cell area. An overall construction site survey may also be required. Elevation data is to be provided to 0.01 feet.

1.02 QUALITY ASSURANCE

The confirmation surveys shall be sealed by a registered land surveyor licensed in this State.

1.03 SHOP DRAWINGS

A. Grade Stakes Numbering System: Provide grid numbering methodology for review. Provide method to number and log individual stakes to assure no stakes remain in compacted soil or clay liner.

PART 2 PRODUCTS

Not applicable.

PART 3 EXECUTION

3.01 GRID OVERLAY

The Surveyor shall establish a grid pattern for control over the entire landfill cell area. The grid dimensions for the landfill cell shall be 50 foot by 50 foot. The grid pattern shall remain in the same location for each land survey described below. The Surveyor shall develop and utilize a numbering system for grid points. The Surveyor shall coordinate the establishment of the grid pattern with the grading Contractor and this grid pattern will be used in the construction staking.

3.02 CELL SUBGRADE SURVEY

The Surveyor shall provide a two (2) foot contour map with grid elevations shown for the landfill cell(s) subgrade. The survey shall represent as-built elevations immediately prior

to placement of the compacted clay liner. The survey shall confirm the correct slopes and grades with those given on the drawings.

3.03 COMPACTED CLAY LINER SURVEY

The Surveyor shall provide a two (2) foot contour map with grid elevations shown for the landfill compacted clay liner and subgrade. The grid elevations shall be presented to facilitate confirmation of the required thickness (see Figure 1). The survey shall represent as-built elevations immediately prior to placement of the geomembrane liner. The survey shall confirm the correct layer thickness, slopes, and grades with those given on the drawings. The survey shall include limits of the compacted clay liner as applicable.

3.04 GEOSYNTHETICS SURVEY OF LINER

The Surveyor shall provide a map locating the anchor trench, edge-of-liner, FML panels, all destructive test sample locations, all FML repairs, and limits of each layer of geosynthetics and locations of all unique structures. The survey shall represent as-built final elevations. The 3D surface area(s) of the geosynthetics shall be shown on the survey.

3.05 PROTECTIVE COVER ON LINER

The Surveyor shall provide a two (2) foot contour map with grid elevations shown for the landfill protective cover layer, compacted clay liner, and subgrade. The grid elevations shall be presented to facilitate confirmation of the required thickness (see Figure 1). The survey shall represent as-built final elevations. The survey shall confirm the correct layer thickness, slopes, and grades with those given on the Construction Drawings. The protective cover survey should include the location of rain flaps and all leachate system piping and gravel. The surveyor shall provide wire flags at offsets determined by the design engineer, for the outer most certification grid points. The survey stakes will be referenced during the leak location survey.

3.06 OVERALL CONSTRUCTION SITE SURVEY

The Surveyor shall provide a two (2) foot contour map of the entire construction site outside of the cells. This survey can be shown on one of the cell confirmation surveys or as a separate survey. This survey shall locate all improvements in this project including structures, underground pipelines and electrical lines, and roads.

3.07 GRADE STAKES

The Surveyor shall remove all grade stakes prior to placement of subsequent layer. The Surveyor shall develop and utilize a grade stake numbering system to log and number individual stakes.

3.08 SURVEYS

The Surveyor shall provide seven (7) sealed and signed prints of each survey and an electronic data file compatible with AutoCAD 2007 or newer Software. The surveys shall

include the data of surveys, vertical control utilized, and horizontal control utilized. The surveys shall be at a legible scale not less than 1” - 50'.

3.09 SCHEDULE

The Surveyor shall provide the confirmation surveys within two (2) days of completion of the particular portion of the work to which they pertain.

DATA PRESENTATION EXAMPLE
FIGURE 1

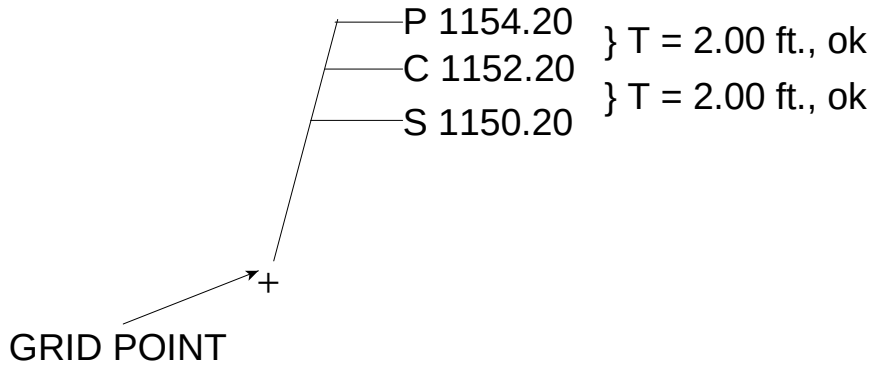

* The specific minimum thickness is measured perpendicular to surface. A greater difference in elevation will be required on slopes in order to obtain the specified minimum thickness.

KEY

P	**PROTECTIVE SOIL LAYER ELEVATION**
C	**COMPACTED CLAY LINER ELEVATION**
S	**COMPACTED SUBGRADE**
T	**THICKNESS**

--END OF SECTION--

SECTION 01400

QUALITY CONTROL

1.01 DESCRIPTION

A. The OWNER shall employ and pay for the services of a third party CQA firm and a geotechnical engineering firm to confirm the installation of the geomembrane and clay liners, and perform soils, concrete and other required testing. The CONTRACTOR shall coordinate his work with the third party firms. The third party CQA firm shall use the CQA manual for this project which is included as a part of these specifications by reference.

1. Employment of the third party CQA firm and geotechnical firm shall in no way relieve CONTRACTOR's obligations to perform the work of the Contract.

2. While the OWNER will provide all materials testing, any retesting required due to failure of material installation by CONTRACTOR shall be back-charged to the CONTRACTOR.

B. Related requirements specified in other sections:

1. Certification of Products: The respective sections of Specifications.

2. Test, adjust and balance of equipment: The respective section of Specifications.

3. Laboratory tests required, and standards for testing: The respective section of the Specifications.

C. Testing laboratory inspection, sampling and testing is required for but not limited to the following:

1. Section 02210 - Grading
2. Section 02220 - Trenching, Backfilling and Compaction
3. Section 02250 - Compacted Clay Liner
4. Section 02253 - Protective Cover - On-Liner Native Sandy Soils
5. Section 02255 - Protective Cover - On-Liner Sandy Soils
6. Section 02745 - Leachate Piping
7. Section 02747 - Leachate Collection System
8. Section 02750 - HDPE Geomembrane Liner
9. Section 02757 – Geotextile
10. Section 02760 – Geomembrane Leak Location Survey for Single Geomembrane covered with Granular Material

1.02 QUALIFICATION OF LABORATORY

A. Meet "Recommended Requirements for Independent Laboratory Qualifications", published by American Council of Independent Laboratories.

B. Meet basic requirements of ASTM E 329, "Standards of Recommended Practice for Inspection and Testing Agencies for Concrete and Steel as Used in Construction, as appropriate.

C. Authorized to operate in the State in which Project is located.

D. Must have established credentials and experience in CQA of geomembrane and compacted clay liners, as appropriate.

E. Testing Equipment

1. Calibrated at reasonable intervals by devices of accuracy traceable to either:

a. National Bureau of Standards
b. Accepted values of natural physical constants

1.03 LABORATORY DUTIES

A. Cooperate with DESIGN ENGINEER and CONTRACTOR: provide qualified personnel after due notice.

B. Perform specified inspections, sampling and testing of materials and methods of construction:

1. Comply with specified standards.

2. Ascertain compliance of materials with requirements of Contract Documents.

C. Promptly notify DESIGN ENGINEER and CONTRACTOR of observed irregularities or deficiencies of work or products.

D. Promptly submit written report of each test and inspection; two copies each to DESIGN ENGINEER, and one copy to CONTRACTOR and record documents file. Each report shall include:

1. Date issued.

2. Project title and number.

3. Testing laboratory name, address and telephone number.

4. Name and signature of laboratory inspector.

5. Date and time of sampling or inspection.

6. Record of temperature and weather conditions.

7. Date of test.

8. Identification of product and specification section.

9. Location of sample or test in the Project.

10. Type of inspection or test.

11. Results of tests and compliance with Contract Documents.

12. Interpretation of test results, when requested by DESIGN ENGINEER.

E. Perform additional tests as required by DESIGN ENGINEER or the OWNER if initial tests are not conclusive to merit acceptance.

1.04 LIMITATIONS OF AUTHORITY OF TESTING LABORATORY

A. Laboratory is not authorized to:

1. Release, revoke, alter or enlarge on requirements of Contract Documents.

2. Approve or accept any portion of the work.

3. Perform any duties of the CONTRACTOR.

1.05 CONTRACTOR'S RESPONSIBILITIES

A. Cooperate with laboratory personnel, provide access to work, to manufacturer's operations.

B. Secure and deliver to the laboratory adequate quantities of representational samples of materials proposed to be used and which require testing.

C. Provide to the laboratory the preliminary design mix proposed to be used for concrete, and other material mixes which require control by the testing laboratory.

D. Furnish copies of product test reports as required.

E. Furnish incidental labor and facilities:

1. To provide access to work to be tested.

2. To obtain and handle samples at the Project site or at the source of the product to be tested.

3. To facilitate inspections and tests.

4. For storage and curing of test samples.

--END OF SECTION--

SECTION 02255

PROTECTIVE COVER - ON LINER - SANDY SOILS

PART 1 GENERAL

1.01 SCOPE OF WORK

This section covers the material and placement of the protective cover system for liner systems utilizing a sandy soil drainage blanket with a permeability of $k \exists 1x10^{-2}$ cm/sec.

1.02 QUALITY ASSURANCE

A. Quality assurance shall be in accordance with the requirements of Section 01400 – Quality Control and the testing program requirements of this section.

B. A representative of the CQA ENGINEER shall be present at all times during protective cover construction activities.

C. The contractor shall be present at a geosynthetics post deployment meeting prior to beginning protective cover placement.

1.03 RELATED WORK

A. Section 02747 – Leachate Collection System

B. Section 02757 – Cushion and Separation Geotextile

1.04 MEASUREMENT AND PAYMENT

A. Measurement shall be made by survey or field measurement and computed by the DESIGN ENGINEER in cubic yards with the quantity for payment being the produce of the surface area as provided by the Confirmation Surveyor and the required thickness (12”) of the protective cover.

B. Protective cover placed beyond the limits of the lines and grades as shown on the Construction Drawings will not be accepted and must be removed, if directed by the DESIGN ENGINEER, at the Contractor’s expense.

C. The entire Protective Cover must meet or exceed the specified thickness requirements prior to payment.

D. Payment for work shall be made on the unit price bid in the Proposal.

PART 2 PRODUCTS

2.01 SANDY SOIL COVER MATERIAL

Material for the sandy soil (protective cover) shall be a loose granular material resulting from the disintegration of rocks, shall be capable of 98% passage through a 2@ screen and shall have no more than 5% by weight passing the No. 200 sieve. The protective cover material shall contain no aggregate rocks, debris, plant material, material with sharp edges, lignite, coal, ash, or carbonaceous material. By-products of industrial processes, with the exception of quarry grinding operations, shall not be accepted. The sandy soil (protective cover) material shall have a permeability of not less than $1x10^{-2}$ cm/sec.

Construction Quality Assurance shall meet the minimum requirements for the Granular Drainage Media as follows:

Test	Minimum Frequency	Criteria
Grain size to No. 200 sieve (ASTM D 422)	1,500 yd^3	98% < ½" and < 5% passing 200 sieve
Permeability (ASTM D 2434)	3,000 yd^3	k ∃ $1x10^{-2}$ cm/sec

PART 3 EXECUTION

3.01 CONSTRUCTION OF PROTECTIVE COVER

A. The CONTRACTOR shall maintain the sand and stone stockpiles from the time he mobilizes to the job site.

B. Sandy soils for the protective cover shall be placed and spread with light weight rubber-tired or tracked equipment. All tracked equipment used in placement of the protective cover shall be low ground pressure equipment having a ground contact pressure less than six (6) psi. Tracked equipment must be operated in such a manner that sharp turns that cause dragging of the tracks over the protective cover are minimized. Haul trucks delivering sand or stone to the cell shall operate over a minimum thickness of 4 feet of protective cover while in the cell. The delivered material shall be stockpiled at depths of a minimum four feet and thence spread to the thickness indicated utilizing light weight rubber- tired or track equipment so as not to damage the geomembrane liner, geotextile, or leachate collection system piping. Material inadvertently tracked into the cell by the haul trucks which does not meet Section 2.01 above, must be removed.

The edge of cell and along the tie-in to existing cells, an isolation strip shall be left free of protective cover (minimum 2-foot width) until the leak location survey is complete. Upon completion of the survey, the isolation strip shall be backfilled with protective cover material in accordance with part 3.01 of this section. The contractor shall provide a water truck and personnel to add moisture to the protective cover as directed by the CQA engineer to facilitate the performance of the leak location survey.

C. The sandy soils on the floor and side slopes shall be 12 inches thick. The thickness shall be measured perpendicular to the slope of face. Payment quantity shall be equal to the quantity of underlying geomembrane times 12 inches.

D. After completion of the protective cover, the protective cover system shall be surveyed to ensure the specified thickness has been achieved.

E. Any damage to the geomembrane shall be repaired in accordance with Section 02750 HDPE Geomembrane Liner and under the direction of the CQA ENGINEER. The contractor is responsible for removing protective cover to allow access for geosynthetic repairs.

--END OF SECTION--

SECTION 02747

LEACHATE COLLECTION SYSTEM

PART 1 GENERAL

1.01 SCOPE OF WORK

The CONTRACTOR shall furnish all labor, material, supervision, and equipment to complete the perforated leachate piping collection systems for the cells including collection piping, gravel, and geotextile.

1.02 RELATED WORK

A. Section 02745 - Leachate Piping

B. Section 02253 - Protective Cover - On Liner - Native Sandy Soils

C. Section 02255 -Protective Cover - On Liner -Sandy Soils

D. Section 02757 – Cushion and Separation Geotextile

1.03 QUALITY ASSURANCE

A. Quality assurance shall be in accordance with the requirements of Section 01400 Quality Control and the testing program requirements of this section.

1.04 MEASUREMENT AND PAYMENT

A. No separate measurement shall be made.

B. Payment shall be included in the price for leachate piping.

PART 2 PRODUCTS

2.01 LEACHATE COLLECTION PIPING

A. Leachate collection piping shall be in accordance with Section 02745 - Leachate Piping.

2.02 CRUSHED AGGREGATE OR RIVER GRAVEL

Crushed aggregate or river gravel for encasing leachate pipe shall be a clean washed hard non-carbonaceous mineral such as granite. Crushed aggregate or river gravel size shall be No. 57 in accordance with ASTM D448-86.

2.03 TRANSITION FILTER

Crushed aggregate or river gravel for the transition filter shall be a clean, washed, hard, non-carbonaceous mineral such as quartz. Gravel size shall be No. 89 in accordance with ASTM D448-86 or NC DOT size No. 89 or No. 78M.

2.04 CUSHION GEOTEXTILE FABRIC

Geotextile shall be a total of 12 oz./s.y. non-woven geotextile of polypropylene fibers or polyester yarns which is intended to be and shall be suitable for cushion and separation. This geotextile shall be installed in 2 separate 12 osy layers under the gravel leachate collection column, only. Other areas of the cell will have one layer of this 12 osy material.

2.05 GEOTEXTILE FABRIC WRAP

Geotextile shall be a 6.0 oz./s.y. non-woven geotextile of polypropylene fibers or polyester yarns which is intended to be and shall be suitable for filtration and separation.

2.06 SACRIFICIAL SEPARATION GEOTEXTILE FABRIC

Sacrificial Separation Geotextile Fabric shall be non-woven geotextile of polypropylene fibers or polyester yarns which are intended to be and shall be suitable for separation. Geotextile shall be minimum 6 ounce per square yard fabric in accordance with Section 02757 – Cushion and Separation Geotextile.

PART 3 EXECUTION

3.01 INSTALLATION

A. The leachate collection system shall be installed in accordance with the construction details in the Construction Drawings. The leachate pipe shall be embedded in gravel (the gravel leachate collection column) with the gravel providing separation of the pipe from the protective cover. This gravel leachate collection column will be covered with the sacrificial separation geotextile fabric to be removed immediately prior to waste placement.

B. The OWNER shall provide the services of a Registered Land Surveyor to certify that the thickness of the material required by the plans and specifications is actually in place. This Surveyor shall also prepare an "As-Built" drawing of the site which shows the in-place location of the collection system.

C. Perforations in leachate collection piping shall be clear during installation. If required, Contractor shall use pressure washer to clean perforations after installation inside cell. This work will be monitored and verified by the CQA tech. No connections will be made to piping that is present outside the edge of the liner (geomembrane) until the geomembrane leak location survey is complete.

--END OF SECTION--

SECTION 02750

HDPE GEOMEMBRANE LINER
(NOT IN THIS CONTRACT)

PART 1 GENERAL

1.01 SCOPE OF WORK

A. The CONTRACTOR shall furnish all labor, materials, supervision and equipment to complete the installation of the HDPE Geomembrane Liner, including, but not limited to, liner layout, seaming, patching, and all necessary and incidental items required to complete the work, in accordance with the Construction Drawings and these Specifications.

B. Sufficient liner material shall be furnished to cover all lined areas shown on the Construction Drawings, including overlaps at field seams and anchor trenches.

C. It is the intent of these specifications to ensure a quality finished product. It shall be the responsibility of the CONTRACTOR to ensure that this requirement is met.

1.02 QUALITY

A. The CONTRACTOR will be required to submit a quality control program to the CQA ENGINEER prior to initiating field work.

B. The OWNER shall employ and pay for the services of a third-party CQA ENGINEER, in accordance with Section 01400 - Quality Control, to confirm the installation of the liners.

C. All installation procedures and testing shall be in accordance with these specifications and OWNER's Independent Construction Quality Assurance (CQA) Manual. A copy of this manual is attached.

D. All field destructive and non-destructive testing will be performed by the CONTRACTOR. Samples for laboratory testing will be taken by the CONTRACTOR for testing at the CONTRACTOR's laboratory as well as the CQA ENGINEER's laboratory.

1.03 SUBMITTALS

A. The geomembrane manufacturers shall submit certification that all sheets manufactured for the project have been produced in accordance with these specifications along with results from a quality control program. This information must be submitted for review prior to material delivery. The CQA ENGINEER reserves the right to halt installation until proper certification is submitted and determined acceptable for use.

B. The CONTRACTOR shall submit to the CQA ENGINEER, six (6) full sets of panel layout Construction Drawings. Field welds and panels shall have an identification system. Construction Drawings shall be submitted to the CQA ENGINEER at least two (2) weeks prior to installation.

C. The manufacturer of the geomembrane used in this work shall approve all shop drawings and a proposed liner layout to cover the lined area shown on the Construction Drawings.

D. Details shall be included to show the termination of the liner at the perimeter of lined areas, the methods of sealing around penetrations and methods of anchoring.

E. The CONTRACTOR shall submit to the CQA ENGINEER a physical sample of the liner to be used. The samples shall be labeled with the manufacturer's name, product identification, lot number and roll number.

F. The CONTRACTOR shall also submit to the CQA ENGINEER inventory tickets, roll numbers or batch identifications, packing papers and invoices for the liner used.

G. The CONTRACTOR shall provide personnel resumes demonstrating compliance with the following requirements:

1. A minimum of one (1) field superintendent per shift shall be designated by the CONTRACTOR and approved by the CQA ENGINEER. Each field superintendent shall have a minimum of three years and five million square feet of field experience in installing HDPE geomembranes. Any change or replacement of superintendent during the project must be approved by the CQA ENGINEER.

2. The weld technicians shall have a minimum of one year and one million square feet HDPE geomembrane welding experience.

1.04 WARRANTY

A. Material

The MANUFACTURER is responsible for guaranteeing its product. The warranty shall include all that is listed below:

1. Shall begin at the time of issuance of CQA ENGINEER's Certification of Substantial Completion.

2. The material shall be free from defects and be able to withstand normal weathering and use from the date of installation for a period of 20 years under normal uses and services for which it is designed and manufactured.

3. This limited warranty does not include damages or defects resulting from acts of God, casualty or catastrophe such as, but not limited to earthquake, flood, piercing hail, or tornado.

4. "Normal Use" excludes: exposure to harmful chemicals, mechanical abuse by machinery, equipment, or people, excessive pressure beyond that indicated by the final overburden or municipal refuse and cover indicated on the Construction Drawings.

1.04 MEASUREMENT AND PAYMENT

A. Measurement shall be per square foot of in-place geomembrane liner as measured by the confirmation surveyors 3-D surface area on the geomembrane survey. Measurement shall be to the upper inside corner of all anchor trenches.

B. Payment shall be at the unit price in the Proposal. All testing, patches, repairs, material in the anchor trenches, waste, overlap, and material beyond the required pay limits will be considered incidental to the construction and will be excluded from payment. All materials and work required of the CONTRACTOR for excavation, backfill, and compaction of the anchor trench are also considered incidental to the installation and will also not be included as pay items.

C. Payment quantities will be determined by the DESIGN ENGINEER based off the information provided by the confirmation surveyor. No payment shall be made until liner is actually installed and the state accepts the certification of the CQA ENGINEER.

PART 2 PRODUCTS

2.01 GEOMEMBRANE LINER

A. The geomembrane shall comprise HDPE material manufactured of new, first-quality products designed and manufactured specifically for the purpose of municipal waste leachate containment in sanitary landfills.

B. The geomembrane material shall be so produced as to be free of holes, blisters, undispersed raw materials or any sign of contamination by foreign matter. Any such defect shall be repaired in accordance with the manufacturer's recommendations. The DESIGN ENGINEER or CQA ENGINEER may reject all or portions of units (or rolls) of geomembrane if significant quantities of production flaws are observed.

C. The geomembrane material shall meet the material properties as specified in the Geosynthetic Research Institute GRI Test Method GM-13, as latest revised for 60 mil HDPE geomembrane. The minimum thickness requirement shall be for the lowest individual measurement, not the average.

D. The geomembrane liner shall be the required minimum liner thickness as shown on the Construction Drawings.

E. If natural colored, the manufacturer shall add carbon black per ASTM D 1248 Specifications, Section 3.1.2.3, Class C.

F. The manufacturer's quality control program shall include the following inspections and tests:

1. Inspection for: Appearance on both sides, manufacturing defects, and thickness at 10 random locations across each sample strip.

2. Testing in accordance with the Geosynthetic Research Institute GRI Test Method GM-13, as latest revised, for 60 mil HDPE Geomembrane. The minimum thickness requirement shall be for the lowest individual measurement, not the average. The results shall be reported.

2.02 PACKAGING AND STORAGE

A. The geomembrane shall be shipped rolled. Folded or otherwise creased liner will not be accepted. The liner shall be marked and tagged with the following information:

1. Serial Number
2. Resin Type
3. Roll Length
4. Gross Weight
5. Inspected By
6. Date of Manufacture
7. Resin Lot Number
8. Roll Width
9. Net Weight

B. Liner which has been delivered to the project site shall be stored in a dry area and protected from precipitation and direct sunlight.

C. Care shall be taken to keep the materials clean and free from debris prior to installation.

PART 3 <u>EXECUTION</u>

3.01 GENERAL

The geomembrane liner shall be constructed as soon as practical after completion of the compacted clay liner and after certification in writing of the clay liner by the CQA ENGINEER and the CONTRACTOR. The geomembrane liner shall be installed following the manufacturer's printed recommendations, using sound, accepted engineering practices. All liner installation shall be completed by one crew and shall be installed in no more than 30 calendar days from the date of initiation of installation. The installing crew shall be approved by the manufacturer/fabricator for installation of 60 mil HDPE synthetic liners.

A manufacturer's technical representative shall be at the Pre-Deployment Meeting and on-site at the time of installation.

A. Geomembrane Liner

1. No horizontal seams are allowed within five (5) feet of the toe of the slope.

2. Unroll only those factory-packaged sections which are to be anchored or seamed together in one day. Panels should be positioned with the overlap recommended by the manufacturer, but not less than two (2) inches.

3. After panels are initially in place, remove as many wrinkles as possible. Unroll several panels and allow the liner to "relax" before beginning field seaming. The purpose of this is to make the edges which are to be bonded as smooth and free of wrinkles as possible.

4. Once panels are in-place and smooth, commence field seaming operations.

5. Personnel working on the geomembrane shall not smoke, wear damaging shoes or engage in any activity which damages the geomembrane.

6. The anchor trench shall be excavated, backfilled and compacted. Care should be taken when backfilling the trench to prevent any damage to the geomembrane.

7. Damaged and sample coupon areas of geomembrane shall be repaired by the CONTRACTOR. Any damage to the soil / clay liner component while coupons are open is the responsibility of the CONTRACTOR. Repaired areas will be tested for seam integrity by the CONTRACTOR. Damaged materials are the property of the CONTRACTOR and will be removed from the site at the CONTRACTOR's expense. The CONTRACTOR will retain all ownership and responsibility for the geomembrane until acceptance by the OWNER.

3.02 SEAMING

A. Geomembrane Liner

1. Field Seaming

a. All foreign matter (dirt, water, oil, etc.) shall be removed from the area to be bonded. If the seam is to be bonded by the extrusion process, the bonding surfaces must be thoroughly cleaned by mechanical abrasion or alternate methods approved by the CQA ENGINEER to remove surface cure and prepare the surfaces for bonding. No solvents shall be used to clean the geomembrane liner.

b. Tack welds, if used, shall use heat only; no double-sided tape, glue or other method will be permitted. The geomembrane should be seamed completely to the ends of all panels to minimize the potential of tear propagation along the seam. Seaming of the bottom membrane to the sidewall membrane shall be conducted when conditions minimize thermal expansion effects. The completed liner shall not exhibit "trampolining" and shall be in full contact with the underlying soil liner.

c. At the end of each day or installation segment, all unseamed edges shall be anchored by sand bags or other approved device. Sand bags shall weigh approximately 20 pounds and shall be placed no further apart than 20 foot spacing along the open end of the geomembrane. If high winds are expected, boards along the edge of unseamed panels, with weighted sand bags on top, should be used to anchor the geomembrane on the bottom of the cell. Staples, U-shaped rods, or other penetrating anchors shall not be used to secure the geomembrane. The temporary anchoring of the geomembrane is fully the responsibility of the CONTRACTOR. Any material damaged as the result of weather effects, shall be repaired or replaced at no cost to the OWNER.

d. It is imperative to keep surface water runoff from beneath the geomembrane at all times during installation. The CONTRACTOR's panel placement and seam welding technique and welding schedule shall minimize or eliminate the accumulation of water beneath the geomembrane. Any water found ponded beneath the geomembrane after the geomembrane has been installed shall be removed by the CONTRACTOR at no cost to the OWNER. Any compacted soil liner beneath installed geomembrane that has become excessively moist, soft or unsuitable to perform its intended function shall be replaced at no cost to the OWNER.

e. After field seaming is complete in a given area, liner edges in the anchor trench should be buried. Do not bury the liner edge in the anchor trench within 30 feet of an incomplete or unbounded field seam.

2. Field seaming may be extrusion or fusion welding or a combination of these methods. Solvent welding is not acceptable. The DESIGN ENGINEER or CQA ENGINEER reserves the right to reject any proposed seaming method believed unacceptable.

a. Extrusion welding applies a molten bead of material to preheated sheets of geomembrane. The sheets are then joined by pressure.

b. The fusion welding process heats the area to be joined to the melting point and then applies pressure to join the melted surfaces.

c. The sheets to be joined shall be overlapped at least two (2) inches after the necessary aligning and cutting.

d. In general, seams should be oriented parallel to the line of maximum slope, i.e., oriented up and down, not across, the slope. In corners and odd shaped geometric locations, the number of field seams should be minimized.

e. No horizontal seams should be within five (5) feet from the toe of the slope.

f. No seaming should be attempted above 40 degrees C (104 degrees F) ambient air temperature. Below five (5) degrees C (41 degrees F) ambient air temperature, preheating of the geomembrane may be required. It shall be the responsibility of the CONTRACTOR to demonstrate that conditions are favorable for seaming by acceptable test (start-up) seams which duplicate, as closely as possible, actual field conditions. Preheating may be achieved by natural and/or artificial means (shelters and heating devices).

g. A moveable protective layer of plastic may be required, as recommended by the CQA ENGINEER, to be placed directly below each overlap of geomembrane that is to be seamed. This is to prevent any moisture build-up between the sheets to be welded.

h. Seaming will extend to the outside edge of panels to be placed in anchor trenches.

i. If required, a firm substrata should be provided by using a flat board, a conveyor belt, or similar hard surface directly under the seam overlap to achieve proper support.

j. Grinding prior to welding shall be as recommended by the geomembrane manufacturer and shall be done perpendicular to the sheet edge. Overground or improperly ground areas shall be replaced at the CONTRACTOR's expense.

k. No folds, wrinkles or "fish-mouths" shall be allowed within the seam area. Where wrinkles or folds occur, the material shall be cut, overlapped and an extrusion-weld shall be applied. During wrinkle or fold repairs, adjacent geomembrane may not necessarily be required to meet the two (2) inch minimum overlap, if approved by the CQA ENGINEER. All welds on completion of the work shall be tightly bonded and sealed.

3.03 TESTING OF HDPE GEOMEMBRANE

A. General

1. Samples of the field seams shall be taken and tested in accordance with ASTM D6392 ensure that tensile strength at yield and break, elongation at yield and break meet the minimum specifications. A quality control certificate shall be issued with the material.

2. The CONTRACTOR shall employ on-site physical non-destructive testing on all welds.

3. A quality control technician employed by the CONTRACTOR shall inspect each sheet and seam. Any area showing a defect shall be marked and repaired in accordance with HDPE repair procedures.

B. Test seams shall be made each day prior to commencing field seaming. The seams shall be made on fragment pieces of geomembrane under the same surface and environmental conditions as the production seams to verify that seaming conditions are adequate. The test seams shall be made at the beginning of each seaming period; at changes of equipment, equipment settings, operator, weather, or sheet temperature; at the CQA ENGINEER's discretion, and at least once every four to six hours during continuous operation of each welding machine; or at change in material type (i.e., smooth-to-smooth seam versus smooth-to-textured seam).

1. The test seam sample will be at least 1.5 m (5 feet) long by 0.3 m (1 foot) wide with the seam centered lengthwise. Ten (10) adjoining specimens 25 mm (1-inch) wide each will be die cut from the test seam sample. These specimens, which will be tested with a tensiometer in the field for shear (five samples) and peel (five smples) by the CONTRACTOR and witnessed by the CQA ENGINEER, should not fail in the seam. If a test seam fails, the entire operation will be repeated. If the additional test seam fails, the seaming apparatus or seamer will not be accepted and will not be used for seaming until the deficiencies are corrected and two (2) consecutive successful full test seams are achieved. Test seam failure is defined as failure of any one of the specimens tested in shear or peel.

2. The CQA ENGINEER will observe all test seam procedures. The remainder of the successful test seam sample will be assigned a number and marked accordingly by the CQA ENGINEER, who will also log the date, hour, ambient temperature, number of seaming unit, name of seamer and pass or fail description. At least one (1) tested specimen from each test as selected by the CQA ENGINEER will be retained by the CQA ENGINEER. The CQA ENGINEER will transmit these specimens to the OWNER following acceptance of the geomembrane materials and installation by the OWNER.

3. The criteria for determining a passing seam shall be the properties shown in the "Seam Strength" table of Geomembrane Liner Section of the CQA Manual.

C. Field Seams: Field seams will be tested by the CONTRACTOR continuously using non-destructive techniques and at specified intervals using destructive tests. Requirements for non-destructive and destructive testing are as follows:

1. Single Weld Seams: The CONTRACTOR shall maintain and use equipment and personnel at the site to perform continuous vacuum box testing on all single weld production seams or when the geometry of the weld makes pressure testing impractical.

a. Equipment for Vacuum Testing:

1. Vacuum box assembly consisting of a rigid housing, a transparent viewing window, a soft neoprene gasket attached to the bottom, port hole or valve assembly, and a vacuum gauge.

2. Vacuum pump assembly equipped with a pressure controller and pipe connection.

3. A rubber pressure/vacuum hose with fittings and connections.

4. A bucket and means to apply a soapy solution.

b. Procedure for Vacuum Testing:

1. Trim excess overlap from seam, if any.

2. Turn on the vacuum pump to reduce the vacuum box to approximately five (5) inches of mercury, i.e., three (3) psi gauge.

3. Apply a generous amount of solution of strong liquid detergent and water to the area to be tested.

4. Place the vacuum box over the area to be tested and apply sufficient downward pressure to "seat" the seal strip against the liner.

5. Close the bleed valve and open the vacuum valve.

6. Apply a minimum of five inches Hg. vacuum to the area as indicated by the gauge on the vacuum box.

7. Ensure that a leak tight seal is created.

8. For a period of not less than five (5) seconds, examine the FML through the viewing window for the presence of soap bubbles.

9. If no bubbles appear after 15 seconds, close the vacuum valve and open the bleed valve, move the box over the next adjoining area with a minimum three (3) inch overlap, and repeat the process.

10. Mark all areas where soap bubbles appear and repair the marked areas. After repairs are made, retest these areas.

2. Double Weld Seams: The CONTRACTOR shall maintain and use equipment and personnel to perform air pressure testing of all double weld seams. The system shall be capable of applying a pressure of at least 30 psi for not less than five minutes. The CONTRACTOR shall perform all pressure and vacuum testing under the supervision of the CQA ENGINEER. Pressure loss tests shall be conducted in accordance with the procedures outlined in "Pressurized Air Channel Test for Dual Seamed Geomembranes", Geosynthetic Research Institute Test Method GM-6. As outlined by the test method, following a two minute pressurized stabilization period, pressure

losses over a measurement period of five (5) minutes shall not exceed the following: 40 mil - 4 psi, 60 mil - 3 psi, 80 mil - 2 psi.

3. Destructive testing will be performed once per day or as required by the CQA ENGINEER. The locations will be selected by the CQA ENGINEER. Sufficient size samples will be obtained by the CONTRACTOR to provide one sample to the archive, one sample to the CQA ENGINEER for laboratory testing, and two samples to be retained by the CONTRACTOR for both field and laboratory testing. Testing requirements are as follows: Each sample shall be large enough to test five (5) specimens in peel and five specimens in shear. The criteria for passing seams are shown in the "Seam Strength" table in the Geomembrane Liner Section of the CQA Manual. If unresolved discrepancies exist between the CQA ENGINEER's and CONTRACTOR's test results, the archived sample may be tested by the CQA ENGINEER. Samples which do not pass the shear and peel tests will be re-sampled from locations at least 10 feet on each side of the original location. These two re-test samples must pass both shear and peel testing. If these two samples do not pass, then additional samples will continue to be obtained until the questionable seam area is defined.

   The CQA ENGINEER will observe all production seam field test procedures. The remainder of the successful test seam sample will be assigned a number and marked accordingly by the CQA ENGINEER, who will also log the date, seam number, approximate location in the seam, and field test pass-or-fail description, if applicable. The CQA ENGINEER will be responsible for the archive specimen. A geomembrane leak location survey will be performed by others as described in section 02760 of the technical specifications.

3.04 REPAIRS

A. Repair of failing test seams, damage from pressure testing and sample coupons: Damaged and sample coupon areas, and other damaged areas of geomembrane shall be repaired by the CONTRACTOR by construction of a cap strip. No repairs shall be made to seams by application of an extrusion bead to a seam edge previously welded by integrity. Damaged materials are the property of the CONTRACTOR and will be removed from the site at the CONTRACTOR's expense.

B. Make repairs as follows:

1. Abrade surfaces of the geomembrane that are to be repaired no more than 20 minutes prior to the repair,

2. Clean and dry all geomembrane surface immediately prior to repair,

3. Only use approved seaming equipment,

4. Extend patches or caps at least 6 inches beyond the edge of the defect, and round corners of patches to a radius of at least 3 inches, and

5. Cut the geomembrane below large caps to avoid potential for water and gas collection between the two sheets.

3.05 ANCHOR TRENCH BACKFILLING

The anchor trench will be backfilled and compacted to a dry density not less than 90 percent of the maximum dry density determined by the Standard Proctor (ASTM D-698). Care should be taken when backfilling the trench to prevent any damage to the geomembrane. Anchor trench spoil shall be used as backfill material, wherever possible. A minimum of two feet of geomembrane must extend out of the outside edge of the anchor trench in accordance with project plans until the completion of the geomembrane leak location survey.

3.06 PROTECTION OF LEADING EDGES

Between construction of partial sections of the membrane liner, leading edges of the membrane may be exposed or buried for extended periods of time prior to their joining to adjacent, subsequent membrane sections. The combined action of abrasive soil and equipment impact stresses may "etch" unprotected membrane surfaces sufficiently to affect seam strengths. Therefore, it is necessary to protect leading edges in high activity areas with sacrificial layers of HDPE sheet until they are ready for final seaming. As a minimum, each leading edge to be seamed that must be buried or which must be exposed for periods of one (1) month or longer shall be continuously covered by a layer of geotextile overlain by a layer of HDPE sheet. The geotextile shall be non-woven and have a minimum weight of 6 oz. per square yard. The sacrificial HDPE sheet shall have a nominal thickness equal to that of the membrane liner to be protected. Both protective cover sheets layers shall have a minimum width of two feet. The protective cover sheets shall be either covered with soil or weighted with sand bags to prevent displacement by wind. The edge of the sheet to be protected shall be approximately centered beneath the overlying protective layers prior to burial or weighing with sandbags. Leading edges located in areas expected to receive direct traffic from construction equipment shall be buried under a minimum thickness of three feet of buffer soil.

3.07 HDPE LINER ACCEPTANCE

The CONTRACTOR shall retain ownership and responsibility for the geosynthetic lining system until acceptance by the OWNER.

The lining system shall be accepted by the OWNER when:

- The installation is complete as determined by the CQA ENGINEER;
- Verification of the adequacy of all seams and repairs, including associated testing, is complete;
- All documentation of installation is completed, including all CQA reports;
- The CONTRACTOR provides the OWNER with record drawings of the panel layout and seam locations with reference numbers for test locations;

- The CONTRACTOR, the Manufacturer and the CQA ENGINEER provide written certification that the installation was in accordance with the manufacturer's general recommendations, the OWNER's CQA plan, and specifications, with exceptions noted.

--- END OF SECTION ---

SECTION 02757

CUSHION AND SEPARATION GEOTEXTILE
(NOT IN THIS CONTRACT)

PART 1 DESCRIPTION

1.01 SCOPE OF WORK

A. The CONTRACTOR shall furnish all labor, materials, tools, supervision, transportation, and installation equipment necessary for the installation of the geotextile layer, as specified herein, as shown on the Construction Drawings, and in accordance with the Construction Quality Assurance (CQA) Manual.

B. The CONTRACTOR shall be prepared to install the geotextile in conjunction with the earthwork, FML and other components of the liner system.

1.02 REFERENCES

(Note: For geotextile test standards please refer to the current ASTM Annual Book of ASTM Standards, Volume 04.08 Section 4 for the Latest version of the American Society for Testing and Materials (ASTM) Standards.)

1.03 MEASUREMENT AND PAYMENT

A. Cell Floor Cushion Geotextile

1. Measurement shall be by the square foot as measured by the confirmation surveyor in the geomembrane survey. Measurement shall be the 3-D area on the area lined and shall extend to the top inside edge of the anchor trench.

2. Payment shall be at the unit price in the Proposal.

B. Leachate Collection Pipe Cushion Geotextile

1. No separate measurement shall be made.

2. Payment shall be considered incidental to the leachate pipe installation.

C. Leachate Collection System Sacrificial Separation Geotextile

1. No separate measurement shall be made.

2. Payment shall be considered incidental to the leachate pipe installation.

PART 2 PRODUCTS

2.01 MATERIALS

A. This section sets forth the requirements for geotextiles.

B. Physical Properties

The geotextile shall be manufactured using a spunbonded process in which continuous polypropylene filaments are mechanically needled to produce a non-woven geotextile. Manufacturer's certification shall be required stating the geotextile has been inspected for broken needles. This inspection shall be via metal detectors permanently installed on-line at the production facility.

The geotextile shall meet or exceed the properties listed in Table 1. Unless noted otherwise, all numerical values indicate minimum average roll values (i.e., test results from any sampled roll in the lot, when tested in accordance with ASTM D 4759-88 shall meet or exceed the minimum average roll value listed). All strength values are for the weaker principle direction.

TABLE 1

Physical Property	Test Method	Unit Value	Minimum
	Cushion Geotextile		
Mass Per Unit Area	ASTM D 3776	oz/sy	12.0
Puncture Resistance	ASTM D4833	lbs.	95.00
	Separation Geotextile		
Mass Per Unit Area	ASTU D 3776	oz/sy	6.0

ASTM - American Society for Testing and Materials

C. Submittals

Prior to bid, the CONTRACTOR shall submit the geotextile manufacturer's specification sheet(s) which indicate the property values of the product(s) that are submitted for use on the project. A swatch (12" x 12") of each geotextile shall be submitted along with the specification sheets.

Prior to arrival of the geotextile(s) on site, upon request the geotextile manufacturer shall supply quality control/quality assurance documents to the OWNER's representative.

Quality control/quality assurance sampling and testing shall be conducted in accordance with ASTM D 4354 and applicable test standards as found in Table 1. Recommended tests and test frequencies are found in Table 2.

TABLE 2

Property	Minimum Frequency
Mass Per Unit Area	every 100,000 ft^2
Puncture Resistance	every 400,000 ft^2

Additional Supporting Documentation: SUPPLIER shall supply additional documentation which shall include: supporting test date and EPA 9090 test data which will assist the DESIGN ENGINEER in determining the suitability of the geotextile for the intended application.

D. Plant Inspection

A representative of the OWNER may visit the manufacturing plant at any time during the project to observe and inspect the manufacturing process and quality control monitoring, sampling and testing. The OWNER will notify the SUPPLIER at least forty-eight (48) hours in advance of the intended visit. The SUPPLIER shall be responsible for making all necessary arrangements for the visit with the manufacturer. All costs of travel, lodging and meals incurred by the OWNER's representative will be borne by the OWNER.

2.02 SHIPPING, STORAGE AND HANDLING

A. General

Geotextile shall be shipped, stored and handled in accordance with ASTM D 4873, and as specified herein. CONTRACTOR shall be completely responsible for, storage and handling of all geotextiles.

B. Roll Identification

Each roll shall be labeled (by printing directly on the geotextile) or tagged with roll identification number, lot identification number, name of manufacturer, product type and grade, and physical dimensions. The label or tag information shall be affixed or attached to the roll at all times during deployment of the roll. The roll identification number and manufacturer name shall also be marked on the protective covering.

C. Shipping

Geotextile shall be shipped and stored in opaque protective covering. LINER OWNER or Supplier CONTRACTOR shall notify the CQA ENGINEER at least 24 hours prior to schedule delivery. No materials shall be unloaded without the presence of the OWNER's representative. Geotextile(s) delivered to the site shall be inspected for damage, unloaded and stored with minimal handling. CONTRACTOR shall assist the OWNER's representative in conducting inventory, handling and sampling of geotextile at no additional cost to the OWNER.

D. Handling

No hooks, tongs or other sharp tools or instruments shall be used for handling geotextile roll(s). EARTH CONTRACTOR OR LINER CONTRACTOR shall use slings or a pole which extends a minimum of 1 foot beyond each end to unload or handle individual rolls. Geotextile shall not be dragged along the ground.

E. Site Storage

Geotextile roll(s) whose protective covering has been damaged during handling shall be protected from ultraviolet light exposure, precipitation or other inundation, soil, mud, dirt, debris, puncture, cutting or other damaging or deleterious conditions. Geotextile shall not be stored directly on the ground.

2.03 CONFORMANCE TESTING

A. Sampling Procedures

Upon delivery to the site, samples of the geotextile(s) shall be removed and sent to a laboratory, chosen by the OWNER, for testing to ensure conformance to these specifications. Samples shall be selected by the OWNER's representative in accordance with these specifications. Conformance testing, as detailed, in subparagraph1.05 C, Table 2 shall be performed.

B. Interpretation of Conformance Test Results

Test specimens will be obtained from each conformance sample. The minimum number of specimens tested per conformance sample for each tested geotextile property will be determined in accordance with the respective ASTM Standard. The average value will be calculated from the specimen test values of each conformance sample and compared to the minimum average roll value of the tested geotextile property. A conformance sample that yields an average number which is less than the specified minimum average roll property, will be recorded as a failure. If two conformance samples fail, all rolls within the sampled 100,000 square feet or lot will be rejected for use on the project unless the manufacturer would like to have additional testing performed at no cost to the OWNER. If only one (1) conformance test fails, the roll that yielded the failure will be rejected and a subsequent conformance sampled from the same 100,000 square feet or lot will be tested. All rolls within the sampled 100,000 square feet or lot will be rejected for use on the project if the subsequent conformance test fails. Only the roll which yielded a failure will be rejected from use on the project if the subsequent conformance test passes.

2.04 GEOTEXTILE INSPECTION

A. Material Inspection

The CONTRACTOR shall visually inspect all geotextile rolls for imperfections, faulty areas and possible damage prior to installation. All defective rolls shall be marked and repaired in accordance with approved methods.

PART 3 EXECUTION

3.01 INSTALLATION

A. Placement

Geotextile(s) shall be installed as shown on the Construction Drawings, approved installation drawings, and as specified herein or in accordance with the approved installation procedures. No geotextile roll shall be installed without approval of the CQA ENGINEER. Geotextile rolls shall be placed in such a manner as to minimize field sewing.

Geotextile shall be cut only with an approved geotextile cutter.

All changes to approved installation drawings and procedures shall be approved by the CQA ENGINEER prior to implementation.

The CONTRACTOR shall exercise extreme care during geotextile installation to prevent damage to the prepared supporting subgrade surface or to other installed geosynthetics. The CONTRACTOR shall exercise care to prevent the entrapment of rocks, clods of earth or other matter which could damage the geotextile or other geosynthetic, clog the geotextile or hamper seaming. Any geotextile surface showing damage to penetration by foreign objects or distress shall be replaced or repaired.

No foot traffic shall be allowed on the geotextile except with approved smooth - sole shoes. No vehicular traffic shall be allowed on the geotextile. The CONTRACTOR shall not use the geotextile as a work area or storage area for tools and supplies.

The CQA ENGINEER shall have the authority to order the immediate stoppage of work as a result of improper installation procedures or for any reason which may result in defective and improper installation.

Cleanup within the work area shall be an ongoing responsibility of the CONTRACTOR. Particular care shall be taken to ensure that no trash, tools or other materials are trapped beneath the geotextile.

B. Repairs

Geotextile repairs shall be made with patches of the same geotextile material, using approved sewing systems, equipment and techniques. The patch size shall be 24 inches larger in all directions that the area to be repaired. All corners shall be rounded. All stitches shall be located no closer than 1 inch from the edge of the patch.

C. Joining Methods

Thread used to sew panels of geotextiles together shall be UV stabilized polypropylene. The tread color shall contrast with the geotextile color to assist in inspection of the seam.

Geotextile seams shall be prayer or flat seams for non-woven geotextiles. All seams shall be formed by mating the edges of the geotextile panels, and sewn together with continuous stitches located a minimum of 3 inches from the mated edges. A two - thread, type 401k double - locked stitch shall be used for all sewing work. Sewing procedures shall conform to the latest procedures recommended by the geotextile manufacturer.

Thermal welding can also be performed on geotextiles with mass per unit area greater than 7.9 ounces per square yard. For both forms of seaming the CONTRACTOR shall demonstrate that the seam efficiency meets requirements found in Table 1.

D. Cover

All geotextile should be covered within 30 days. If the geotextile will be left exposed for more than 30 days, the manufacturer, prior to shipping, shall provide field U.V. test data and written recommendations for the maximum time of U.V. exposure. Geotextiles which will be left exposed for more than 30 days shall be routinely sampled and tested for tensile strengths every 4 weeks. Samples should be taken from the exposed geotextile and these areas properly repaired. If within the time frame of recommended exposure the tensile strength of the geotextile falls below 80% of the original values, the manufacturer shall replace the detective material assuming all cost for removal of the detective material and installation of the replacement material.

E. Socks

Geotextile fabric socks for wrapping pipe shall be constructed with the fabric specified in this section. The sock shall be constructed by forming a cylinder and stitching the seam in accordance with the joining methods specified in this section. The sock diameter shall be sufficient size to slip easily over the pipe and connecting sleeve.

F. A geomembrane leak location survey will be performed after installation of the protective cover layer. The geotextile must be wet during this survey. The grading contractor will provide a water truck and personnel to provide adequate moisture in the protective cover and underlying geotextile. The grading contractor will excavate test holes in the protective cover and the geotextile will be observed by the leak location contractor. When the required moisture is achieved, the leak location survey will be performed.

-- END OF SECTION --

SECTION 02760

GEOMEMBRANE LEAK LOCATION SURVEY FOR SINGLE GEOMEMBRANE COVERED WITH GRANULAR MATERIALS (NOT IN THIS CONTRACT)

PART 1 – GENERAL

1.1 SECTION INCLUDES

A. Requirements for performance of a geomembrane leak location survey using electrical methods for post-geomembrane installation performance for a single geomembrane covered with granular protective cover materials and underlain by a clay liner.

B. Requirement to perform a geomembrane leak location survey after protective granular drainage material is placed on the geomembrane.

C. The optimum performance of a geomembrane leak location survey using electrical methods requires the conductive media above and below the geomembrane to be electrically isolated from each other except through the leaks being located in the geomembrane. It is also necessary to have a continuous electrically conducting pathway through an electrically conducting material above the geomembrane, through the leaks, and through an electrically conducting media under the geomembrane.

D. The leak location survey shall be conducted after the granular protective cover materials are installed over the geomembrane to detect leaks resulting from construction damage caused during placement of the granular protective cover material layer.

1.2 RELATED SECTIONS

A. Section 01400 – Quality Control

B. Section 02250 – Compacted Clay Liner

C. Section 02253 – Protective Cover – On Liner Native Sandy Soils

D. Section 02255 – Protective Cover – On Liner Sandy Soils

E. Section 02750 – HDPE Geomembrane Liner

F. Section 02757 – Cushion Geotextile

1.3 REFERENCES

A. ASTM D6747 – Standard Guide for Selection of Techniques for Electrical Detection of Potential Leak Paths in Geomembranes

B. ASTM D7007 – Standard Practices for Locating Leaks in Geomembranes Covered with Water or Earth Materials.

1.4 SUBMITTALS

Leak Location Contractor shall submit a Leak Location Survey Work Plan to Design Engineer for approval prior to commencement of the leak location survey. The Leak Location Survey Work Plan shall include:

1. Resumes of on-site supervisors;

2. Description of the survey method, and procedures;

3. Required site preparations;

4. Estimated duration of survey;

5. Quality control and field calibration procedures;

6. Sample of a final report (per ASTM D7007) provided by Leak Location Contractor following the completion of the survey

1.5 CONSTRUCTION QUALITY ASSURANCE

A. The leak location survey shall be observed by or performed by the CQA Consultant.

B. Contractor shall be aware of the leak detection activities outlined herein and shall account for these activities in the construction schedule.

PART 2 – PRODUCTS

2.1 LEAK LOCATION CONTRACTOR AND SUPERVISOR QUALIFICATIONS

A. Leak Location Contractor shall have qualifications for conducting the survey method. Completion of the Liner Integrity Survey/Assessment (LISA) training course conducted by TRI Environmental of Austin, Texas (or equivalent) is considered a minimum qualification. In addition, the leak location surveys must be supervised by a professional or technician with a minimum of three years and 5,000,000 square feet of geomembrane CQA experience. The leak location supervisor must be on site full-time during the performance of the leak location survey.

B. Leak Location Contractor shall furnish equipment for performing the Work that automatically records and stores the leak location survey data in electronic format at the time of data collection (continuous survey data recording) and that can be post-processed for data plotting analysis. Additionally, the Leak Location Contractor and the CQA technician shall keep hand notes of the findings of the leak location survey.

PART 3 – EXECUTION

3.1 INFORMATION REQUIRED

Design Consultant shall provide Leak Location Contractor with drawings showing:

1. All layers constituting the lining system
2. Details of all geomembrane penetrations.
3. Peripheral details, including welds to adjacent lining systems
4. Structures and obstructions above the geomembrane
5. Electrical equipment above the geomembrane

3.2 SITE PREPARATION

A. Leak Location Contractor will identify actions required by Contractor to prepare the site for leak location survey, including means to make electrical contact with conductive material under the geomembrane.

B. Contractor shall ensure that the granular protective cover materials above the geomembrane contain sufficient moisture to conduct a leak location survey. Typically, a moisture content of the granular protective cover material layer of one to two percent by weight is sufficient to conduct the survey. If the moisture content of the Granular Protective Cover material layer is not sufficient per the requirements of Leak Location Contractor, then Contractor shall add sufficient water to the Granular Protective Cover materials as required.

C. Contractor shall provide electrical isolation around the perimeter of the area being surveyed for leaks. Electrical isolation is achieved by leaving approximately a two-foot wide area of dry geomembrane exposed around the perimeter of the survey area or leaving a minimum of two feet of bare geomembrane protruding from the back-filled anchor trench. Any other electrically conducting paths through the geomembrane such as metal pipes, battens, or concrete structures should be likewise isolated. Connections to the leachate collection system components within the survey area to components outside the survey area shall not be made prior to the survey.

3.3 EXECUTION

A. Leak Location Contractor shall inspect the site prior to commencing the survey to ensure all site preparations are completed and the site conditions are appropriate for conducting the leak location survey.

B. Any discrepancy in the required site preparations described in the Leak Location Survey Work Plan or site conditions shall be reported to Contractor for corrective or appropriate action.

C. After the granular protective cover materials are added above the geomembrane, conduct a leak location survey on the granular protective cover materials using the procedures for surveys with granular materials covering the geomembrane described in the latest version of ASTM Standard D7007. The survey data shall be automatically recorded and stored in electronic format at the time of data collection.

C. Leak Location Contractor shall inform CQA Consultant and mark the locations of all identified or indicated leaks with flags, spray paint, or written coordinates.

3.4 REPORTING

Provide the Design Engineer with a written report within 7 calendar days of completion of the leak location survey field work as described in ASTM D7007.

---END OF SECTION---

III

CONSTRUCTION QUALITY ASSURANCE PLAN

CONSTRUCTION QUALITY ASSURANCE (CQA) PLAN

CONSTRUCTION OF CELL NO. 13
EAST CAROLINA REGIONAL LANDFILL
BERTIE COUNTY, NORTH CAROLINA
PERMIT NO. 08-03

FOR

REPUBLIC SERVICES OF NORTH CAROLINA, LLC

DECEMBER 2012

HHNT

HODGES, HARBIN, NEWBERRY & TRIBBLE, INC.

Consulting Engineers

NORTH CAROLINA PROFESSIONAL SEAL 16146 ENGINEER WILLIAM F. HODGES

NORTH CAROLINA PROFESSIONAL SEAL 32249 ENGINEER K. MATTHEW CHEEK

NC. Corp. License No. C-0813

© Republic Services, Inc. (2012)

3920 Arkwright Road, Suite 101 | Macon, Georgia | Phone: (478) 743-7175 | Fax: (478) 743-1703

TABLE OF CONTENTS

PAGE NO.

I. GENERAL 1

II. GRADING 4

III. COMPACTED CLAY LINER 6

IV. HDPE GEOMEMBRANE LINER 11

V. GEOTEXTILE 18

VI. LEACHATE COLLECTION SYSTEM 20

VII. PROTECTIVE COVER - ON LINER - NATIVE SANDY SOILS 22

VIII. PROTECTIVE COVER - ON LINER - SANDY SOILS 24

IX. CERTIFICATION 25

I. GENERAL

A. Republic Services of North Carolina, LLC, (the OWNER) will retain an engineering consulting firm (CQA Firm) to assure that proper construction techniques and procedures are used and to verify that the materials used meet the Contract Specifications. The CQA Firm must employ engineers licensed to practice engineering in the State of North Carolina and experienced in the field of solid waste management and sanitary landfill construction. At the completion of the work, the program requires certification reports indicating that the facility has been constructed in accordance with the Construction Specifications and approved design. It is the responsibility of the certifying Engineer(s) to prepare these reports.

B. To implement the construction project, a CONTRACTOR, familiar with earthwork and geomembrane construction, will serve as a general contractor (CONTRACTOR) providing construction services. In addition, a CQA ENGINEER will be retained to serve as an independent third party to ensure project conformance of all construction activities to established CQA standards. In most instances, the CONTRACTOR will perform all earthwork activities, and may retain a geomembrane contractor for installation of geosynthetic materials. Republic may, at their discretion, directly contract with a geomembrane contractor for installation of geosynthetic materials. The CQA Plan provides guidance information and procedures that should be undertaken by Republic, the DESIGN ENGINEER, and the CONTRACTOR so the work will be of the quality necessary to meet the project objectives and will be responsive to the requirements of Republic Services of North Carolina, LLC.

C. This CQA Plan is a supplemental document to the Construction Plans and Specifications for each project. Where a conflict arises, the Contract Documents will govern.

D. The activities addressed under this CQA Plan include the following activities:

- Grading
- Clay liner construction
- Installation of a HDPE geomembrane liner and leachate collection system
- Placement of soil protective cover

E. Definitions

- Quality Control: A planned system of activities, or the use of such a system, whose purpose is to provide a level of quality that meets the needs of users. The objective of quality control is to provide construction quality control that is safe, adequate, dependable, and economical. The overall system involves integrating the quality factors of several related steps including: the proper specification of what is wanted, production to meet the full intent of the specification, inspection to determine whether the resulting material, product, service, etc. is in accordance with the Construction Specifications, and review of usage to determine necessary revisions of the Construction Specifications.

In practice, Quality Control refers to those procedures, criteria, and tests employed and paid for by the CONTRACTOR(s) to confirm that the work satisfies the CONTRACTOR's standards and is in compliance with the Construction Plans and Specifications. This plan does not address quality control procedures, criteria, and/or tests employed by the CONTRACTOR.

- Quality Assurance: A planned system of activities whose purpose is to provide assurance that the overall quality control program is in fact being effectively implemented. The system involves a continuing evaluation of the adequacy and effectiveness of the overall quality control program with the ability to have corrective measures initiated where necessary. For a specific material, product, service, etc., this involves verifications, audits, and the evaluation of the quality factors that affect the specification, production, inspection, and use of the product, service, system, or environment.

  In practice, Quality Assurance refers to those procedures, criteria, and tests required and paid for by the OWNER to confirm that the work performed by the CONTRACTOR(s) is in compliance with the approved Construction Plans and Specifications and any additional requirements of this Plan.

- Lot: A quantity of resin (usually the capacity of one rail car) used in the manufacture of polyethylene geomembrane rolls. The finished roll will be identified by a roll number traceable to the resin lot used.

- Panel: The unit area of geomembrane that will be seamed in the field. A panel is identified as a roll or portion of a roll that is larger than 100 square feet.

- Subgrade Surface: The soil layer surface which immediately underlies the structural fill, compacted clay liner/cap, or geomembrane liner/cap.

F. Parties referenced in this CQA Plan shall consist of the following:

1. DESIGN ENGINEER: The DESIGN ENGINEER is the official representative of the OWNER. The DESIGN ENGINEER is responsible for the preparation of the construction plans and specifications of the project and for the preparation of the CQA Plan. The DESIGN ENGINEER is also responsible for the interpretation of these documents and for resolution of construction matters that arise during construction. The DESIGN ENGINEER shall review and approve shop drawings, authorize minor variations in the work from the contract documents and reject defective work (duties and responsibilities are described in the General Conditions as “ENGINEER”). The DESIGN ENGINEER shall be a registered professional engineer licensed in North Carolina.

2. CQA ENGINEER: Responsible for defining quality assurance, requirements compatible with the project objectives, verifying basic data as reasonable and complete, outlining procedures to process data, development of statistical procedures for the analysis of test data and preparing quality assurance memoranda and quality control reports. The CQA ENGINEER shall report to the DESIGN ENGINEER. The CQA ENGINEER shall be a registered professional engineer licensed in North Carolina. Reference to the CQA ENGINEER, for the purpose of this document, shall include the CQA ENGINEER or his representative.

3. Engineering Technicians: Responsible for field observations, testing and inspection. Technicians will be assigned to the project as deemed necessary by the CQA ENGINEER and will be responsible to the CQA ENGINEER. The CQA ENGINEER, Technician or the CQA ENGINEER's representative shall be on-site during all construction activities, except clearing and grubbing and initial cell excavation. A daily log of all field technicians, testing and inspection shall be maintained by the Technician.

4. OWNER: The OWNER is the individual, entity, public body, or authority with whom the CONTRACTOR has entered into the Agreement and for whom the Work is performed. For this project, the OWNER is Republic Services of North Carolina, LLC.

5. CONTRACTOR: The CONTRACTOR has the primary responsibility for ensuring that the landfill cell is constructed in accordance with the Construction Plans and Specifications developed by the ENGINEER and approved by the permitting agency. Other responsibilities include the performance of all construction activities at the site including site facilities, administration, material purchasing, procurement, supervision, construction quality control, installation, and subcontracting. The CONTRACTOR is responsible for the protection of completed work until it is accepted by the OWNER. The CONTRACTOR is also responsible for informing the OWNER and CQA Consultants of the scheduling and occurrence of all construction activities.

6. Geomembrane Manufacturer (Manufacturer): The party responsible for manufacturing the geomembrane rolls.

7. Geosynthetic CQA Laboratory (Testing Laboratory): Party, independent from the OWNER, Manufacturer and Installer, responsible for completing laboratory tests on samples of geosynthetics obtained at the site or during manufacturing usually under the direction of the OWNER.

8. Geotechnical CQA Laboratory: Party, independent from the OWNER or CONTRACTOR, responsible for completing laboratory tests on soil samples obtained at the site or source usually under the direction of the OWNER.

9. Geomembrane Installer (Installer): The Installer is responsible for field handling, sorting, placing, seaming, loading (against wind), and other aspects of the geosynthetics installation, including geomembranes,

geotextiles, geocomposites, geosynthetic clay liners, and geocomposite composites.

II. GRADING

A. GENERAL

The CQA ENGINEER shall test the grading, placement, and compaction of in-situ materials and structural fill. The CQA ENGINEER shall certify the materials and construction were in accordance with the plans, specifications, and this CQA Plan.

B. RELATED WORK

The CQA ENGINEER should reference the grading section of the technical specifications for pertinent soil materials, physical properties and construction requirements.

C. SUBGRADES

During construction, conformance and performance testing of the subgrade soil materials shall be performed by the CQA ENGINEER. The CQA ENGINEER shall monitor proofrolling of areas that are cut to achieve grade. Material placed to achieve grades indicated on the plans shall be tested by the CQA ENGINEER in accordance with the test methods and frequencies listed herein to verify that the compacted fill materials used by the CONTRACTOR complies with the technical specifications. Areas of proofrolling or compacted fill that do not conform to the technical specifications will be delineated and reported to the CONTRACTOR. These areas will be re-worked by the CONTRACTOR and re-tested until passing results are achieved.

The CQA ENGINEER shall monitor the repair and re-work of subgrade which is damaged by excess moisture (causing softening) and insufficient moisture (causing dessiccation and shrinkage) or by freezing. If such conditions are found to exist, the CQA ENGINEER shall evaluate by the suitability of the subgrade by the following methods as applicable:

- moisture / density testing;
- continuous visual inspection during proof-rolling;
- other test methods identified herein.

D. CONFORMANCE TESTING

It will be necessary for the CQA ENGINEER to observe and test the structural fill soils to ensure they are uniform and conform to the requirements of the technical specifications. For soil materials obtained from on-site or off-site borrow areas, visual inspections and conformance tests shall be performed by the CQA ENGINEER prior to the materials being used. Borrow area inspections may also be utilized by the CQA ENGINEER to ensure that only suitable soil materials are transported to the site. For both on-site and off-site borrow areas containing non-

uniform materials, it shall be necessary for the CONTRACTOR and the CQA ENGINEER to coordinate excavation and monitoring of the segregation of substandard materials. All materials failing to comply with conformance standards shall be rejected for use.
Initial evaluation of various soil types by the CQA personnel during construction shall be largely visual; therefore, the CQA personnel must be experienced with visual-manual soil classification procedures. CQA personnel shall observe soils for deleterious materials (e.g., roots, stumps, rocks, and large objects). When necessary, the visual-manual procedure for the description and identification of soils shall be conducted by the CQA ENGINEER and the description shall be in accordance with test method ASTM D2488.

E. TEST METHODS AND FREQUENCY

All testing shall be conducted in accordance with the technical specifications or as directed by the DESIGN ENGINEER. The field testing methods, used to evaluate the suitability of soils during their installation, shall be performed by the CQA ENGINEER in accordance with current ASTM test procedures indicated in the table below. Documentation and reporting of the test results shall be the responsibility of the CQA ENGINEER.

The Standard Proctor Test (ASTM D698) shall be used for the determination of moisture / density relationships unless otherwise indicated. In-place surface moisture / density nuclear test method ASTM D2922 or drive cylinder test method ASTM D2937 shall be used for in-situ field testing. The sand cone test method ASTM D1556 or drive cylinder test method ASTM D2937 shall be used to establish correlations of moisture and density in cases of uncertainty, and as a check of the nuclear surface moisture / density gauge calibration. Any conflict regarding acceptance of test results shall be resolved by the DESIGN ENGINEER.

Testing shall be conducted during the course of the work. The minimum construction testing frequencies are presented in the table below. The frequency may be increased at the discretion of the CQA ENGINEER or if variability of the materials is observed by the CQA ENGINEER. Sampling locations shall be selected by the CQA ENGINEER. If necessary, the location of routine in-place density tests shall be determined using a non-biased sampling approach.

A special testing frequency shall be used at the discretion of the CQA ENGINEER when visual observations of construction performance indicate a potential problem.

MINIMUM TESTING REQUIREMENTS FOR STRUCTURAL FILL	
TEST	**FREQUENCY**
Laboratory Moisture-Density / ASTM D698	1 test for each type of soil encountered
Liquid Limit, Plastic Limit, Plasticity Index / ASTM D4318	1 test for each type of soil encountered
Sieve Analysis / ASTM D422	1 test for each type of soil encountered

Field Density and Moisture Content / Sand Cone, ASTM D1556 Drive Cylinder, ASTM D2937 Nuclear, ASTM D2922	1 test per 1,000 c.y. of structural fill

F. COMPACTION

The CQA ENGINEER shall confirm that structural fill conforms to compaction requirements as follows:

Description	General Compaction	Top 12"
Sediment Pond Embankments	95%	95%
Roadways	95%	98%
Shoulders and Embankments	95%	95%
Utilities Under Structures	95%	98%
Other Areas	95%	95%

G. PROTECTION OF SUBGRADES AND FILL SURFACES

The CQA ENGINEER shall monitor newly graded areas to verify the CONTRACTOR is protecting these areas from traffic and erosion until construction is complete.

III. COMPACTED CLAY LINER

A. GENERAL

1. The CQA ENGINEER shall certify the materials and installation are in accordance with the plans, specifications, and this CQA Plan.

B. MATERIAL

1. The clay liner material shall consist of on-site cohesive soils, synthetically improved soils, or imported cohesive soils meeting the permeability criteria of $k \leq 1.0 \times 10^{-7}$ cm/sec. Soils used in compacted clay liners shall consist of clean, select material free of debris, excessive coarse particles or other deleterious matter. Liner material shall be clayey soil, classified according to the United Soil Classification System as SC, CL, CH, ML, or MH (ASTM D2487).

C. STOCKPILING AND MATERIAL APPROVAL

1. All material to be used as the clay liner shall be approved in advance by the CQA ENGINEER. Approval is based upon successful completion of

CQA testing outlined herein. Such testing can be performed either during excavation and stockpiling or from existing stockpiles prior to use.

2. The procedure for testing during excavation and stockpiling is outlined below.

   a. Each load of soil will be examined either at the borrow source or the stockpile area. Any unsuitable material will be rejected or routed to separate stockpiles consistent with its end use.

   b. During stockpiling operations, one bulk sample of material placed will be collected. The following tests will be performed prior to placement of any compacted clay liner material:

      1. Method for Laboratory Determination of Water (Moisture) Content of Soil, Rock, and Soil-Aggregate Mixtures, ASTM D2216.

      2. Method for Particle - Size Analysis of Soils, ASTM D422.

      3. Test Method for Liquid Limit, and Plasticity Index of Soils, ASTM D4318.

   c. One (1) sample for every 10,000 cubic yards of material stockpiled will be selected for moisture – density relationship (ASTM D698) and corresponding permeability testing (ASTM D 5084-90 Measurement of Hydraulic Conductivity of Saturated Porous Materials using a Flexible Wall Parameter).

3. Reports for clay liner will be prepared by the CQA ENGINEER and shall include:

   a. Summary of laboratory test data,

   b. A summary of construction, sampling and testing method, and recommendations.

D. TEST PAD

1. A test pad will be constructed using the same construction methods, equipment, and material to be used for the clay liner component. The test pad construction will be conducted prior to or coincide with the beginning of construction of clay liner component.

2. Construction equipment and methods shall be reviewed by the CQA ENGINEER prior to test fill placement.

3. Construction methods, sampling, and testing, including permeability testing, shall be specified by the CQA ENGINEER.

E. SUBGRADE

1. The CQA ENGINEER shall verify that the clay liner subgrade is constructed in accordance with the grading specifications.

2. The landfill cell shall be excavated to the lines and grades as indicated on the drawings. The subgrade shall be scarified to a depth of 6" and compacted to 95% as determined by the Standard Proctor Test, ASTM-D698.

3. The subgrade shall be reasonably free of large rocks, roots, stumps and other debris.

4. Existing and future drainage channels shall be cleaned so that all sediment, vegetation, and deleterious material is removed prior to placement of the compacted clay liner in these areas.

F. CONSTRUCTION

1. Clay Liner shall be placed to conform to the $k \leq 1.0 \times 10^{-7}$ cm/sec permeability criteria.

2. Only soil previously approved by the CQA ENGINEER shall be used in construction of the clay liner. Unsuitable material will be removed prior to acceptance by the CQA ENGINEER.

3. All required field density and moisture content tests shall be completed before the overlying lift of soil is placed. The surface preparation (e.g. wetting, drying, scarification, etc.) shall be completed before the CQA ENGINEER will allow placement of subsequent lifts.

4. Moisture content will be monitored by the CQA ENGINEER or his representative prior to compaction. If the soil is drier than the specified minimum moisture content, water will be added and the lift will be mixed to distribute the moisture evenly.

   The surface of each lift shall be scarified prior to placement of subsequent lifts.

5. The thickness of the loose lift shall be measured at random locations after spreading and leveling is completed. Loose lift thickness should not exceed 10" for a final 6" compacted lift thickness.

   Each lift shall be checked visually for rocks, debris, plant materials, and other foreign material. The upper 6" of clay liner shall be reasonably free of material which will not pass through a 1" screen. The remaining 18" of compacted clay liner (below the top 6") shall be free of material which will not pass through a 3" screen. This may require mechanical pulverizing of these soils.

6. The exposed surface of the clay liner shall be rolled with a smooth drum roller or equivalent at the end of each work day or when required to protect the compacted clay from adverse weather conditions.

7. The finished clay liner shall be reasonably free of all rock or rock fragments within 6" of the surface. Rock or rock fragments are defined as the material retained by a standard 1" screen. Protrusions shall be removed and all cracks and voids shall be filled and the surface made uniform. Rock or other material protruding more than ½" shall not be allowed. This shall be accomplished by final dressing of the soil liner with smooth drum rollers and hand raking.

8. The surface on which the geomembrane is to be placed shall be maintained in a firm, clean, dry and smooth condition before and during the liner installation.

9. The CQA ENGINEER shall inspect the clay liner and certify that it is in accordance with the specifications and approved plans and receive concurrence of the state prior to the CONTRACTOR beginning installation of geomembrane. This may require separate certifications of liner sections. If this is required, surveys of each section shall be provided by the CONTRACTOR to define the limits of these sections. Placement of geomembrane on any portion of the soil liner surface by the geomembrane installer will constitute his acceptance of the surface.

G. SAMPLING AND TESTING

1. The CQA ENGINEER or his representative will perform field density tests to assure that the soil density and moisture content are within the prescribed limits. The frequency of testing is noted below.

2. Bottom and Sidewall of Cell

   a. Field density tests shall be performed at the rate of one per 10,000 square feet of lined area for each lift of the clay liner base and the subgrade.

   b. The field density tests will be performed using a nuclear density gauge or drive tube method. The location of each test will be randomly determined by the CQA ENGINEER or his representative. All holes shall be repaired as described below.

   c. Perforations in the clay liner resulting from sampling or testing procedures, survey stakes or other activities shall be identified and backfilled by the CQA ENGINEER. The perforations shall be filled with a soil-bentonite mix consisting of 10% minimum by weight bentonite powder or granules mixed with clay liner material. The perforations shall be backfilled with the soil-bentonite mixture in 3-inch loose lifts and thoroughly compacted by hand tamping by the CQA ENGINEER.

d. Two bulk samples of the clay liner for each lift will be collected during placement or compaction. The following tests will be performed:

1. Method for Laboratory Determination of Water (Moisture) Content of Soil, Rock, and Soil-Aggregate Mixtures, ASTM D2216.

2. Method for particle-Size Analysis of Soils, ASTM D422.

3. Test Method for Liquid Limit, Plastic Limit, and Plasticity Index of Soils, ASTM D4318.

4. Moisture - Density Relationship, ASTM D 698.

e. One sample per acre per each lift of clay liner component will be selected by the CQA ENGINEER for permeability testing (ASTM D5084-90).

f. A one square foot section of clay liner for every 20,000 square feet of liner shall be screened with acceptance of the liner will be based on the following criteria:

UPPER 6" CLAY LINER	
Percentage of Material Passing (by weight)	**Screen Size**
95% (all tests)	1”
100% (avg. of all tests)	3”

UPPER 18" CLAY LINER	
Percentage of Material Passing (by weight)	**Screen Size**
100% (avg. of all tests)	3”

Should any sample fail the 95% or 100% passing requirement of the upper 6", then four (4) additional test areas within the 20,000 square foot test area shall be selected by the CQA ENGINEER and tested in like manner. If the four (4) areas pass, then all test areas shall be repaired and the 20,000 square foot area accepted. If any one (1) of the four (4) areas fails, then the 20,000 square foot area shall be reworked and retested. Alternatively, should any sample fail the 95% or 100% passing requirement, the entire area represented by the test (20,000 square feet) may be reworked and resampled by a single test sample. Rocks or roots remaining on or protruding through the surface shall be removed and the surface repaired. These rocks or roots will not be cause for rejection.

g. The following procedure shall be used in the event of density or permeability test failure. If density tests do not meet minimum requirements of the specifications, recompaction of the failed area (minimum 100' x 100') shall be performed and retested until the area meets or exceeds requirements outlined in the specifications. If a permeability sample fails to meet the minimum hydraulic conductivity requirements outlined in the specifications, at least five (5) replicate samples shall be obtained in the immediate vicinity of the failed test. Should the replicate samples confirm the failure of the soil to meet specifications, the area of failure shall be localized and reconstructed in accordance with the specifications. This area shall be retested as outlined within the plan. Alternatively, the entire 40,000 square foot area representing the failing permeability sample shall be reworked and retested for density, moisture and permeability.

IV. HDPE GEOMEMBRANE LINER

A. GENERAL

Stringent quality assurance and careful documentation are required in the production and installation of all geosynthetic materials. The work addressed under this section shall facilitate proper construction of all geosynthetic components of the liner for the landfill. All work shall be constructed to the lines, grades, and dimensions indicated on the project plans, in accordance with the Construction Specifications, or as required by the OWNER or DESIGN ENGINEER.

The CQA ENGINEER shall issue a written daily report of activities to the DESIGN ENGINEER. These reports shall include, at a minimum, observations and test results as well as problems encountered and solutions achieved. Construction reports summarizing significant events, as well as addressing all problems encountered and their solutions, shall be issued to the DESIGN ENGINEER. The format of these reports and frequency shall be established at the pre-construction meeting.

The CQA ENGINEER shall certify the materials and installation are in accordance with the plans, specifications, and this CQA Plan.

B. MATERIAL

1. The geomembrane will be 60 mil High Density Polyethylene (HDPE) supplied and installed by firms approved by the OWNER.

2. Seams for providing watertight joints will be extrusion or double hot wedge fusion seams using techniques approved by the CQA ENGINEER.

3. Construction Quality Assurance shall confirm the material meets the minimum physical properties and test frequencies of the Geosynthetic Research Institute GRI Test Method GM-13, as latest revised, for 60 mil High Density Polyethylene (HDPE) Geomembrane. The minimum thickness requirement shall be for the lowest individual measurement, not the average.

4. The CQA ENGINEER or his representative will sample two (2) rolls from each shipment of geomembrane at the manufacturing plant prior to shipment to the site.

5. The random samples must be representative of the material supplied and exclude the outer wrap of geomembrane if signs of scuffing or other damage is observed. Samples should be full roll width and at least 2 feet long.

6. The laboratory testing of the samples selected by the CQA representative shall be directed by the CQA ENGINEER and shall confirm conformance with the following properties:

a.	Thickness	(ASTM D5199 for smooth sheet (ASTM D5994 for textured sheet)
b.	Density	(ASTM D1505)
c.	Melt Index	(ASTM D1238)
d.	Carbon Black Content	(ASTM D1603)
e.	Tensile Properties	(ASTM D6693 or GRI GM-13)
f.	Tear Resistance	(ASTM D1004, DIE C)
g.	Asperity Height	(GRI GM-12)

7. The CQA ENGINEER or his representative will measure geomembrane thickness of each roll made for the project at the manufacturing plant prior to shipment. Material that does not fall within acceptable thickness criteria will be rejected.

C. GEOMEMBRANE MANUFACTURER AND INSTALLER

1. The Geomembrane Installer will submit the following as obtained from the Geomembrane Manufacturer to the CQA ENGINEER:

   a. Production Certification including project references

   b. Testing Program of Compound Ingredients

   c. Material Certification

   d. Test Data for Material and Resin

   e. All of the above submittals will be reviewed and retained by the CQA ENGINEER

2. The Geomembrane Installer will submit the following to the CQA ENGINEER prior to the installation:

   a. Qualifications of Geomembrane Installer Superintendent and Foreman

   b. Resumes of Geomembrane CONTRACTOR field crew

   c. Six (6) sets of geomembrane panel layout drawings

D. DELIVERY AND STORAGE

1. Upon delivery at the site, the CQA ENGINEER shall inventory all rolls and conduct a surface observation of each roll or factory panel for defects or damage. The inspection will be performed without unrolling rolls or unfolding factory panels unless defects or damages are found or suspected. The CQA ENGINEER will indicate those rolls with severe flaws that should be removed from the site and those rolls with minor flaws.
2. The CONTRACTOR will be responsible for the storage of the geomembrane on-site upon arriving at the site. The OWNER will provide storage space in a location (or several locations) such that on-site transportation and handling are minimized. Storage space should be protected from theft, vandalism, passage of vehicles, etc.

3. The CQA ENGINEER will verify that storage space selected is in a well-drained area and that cribbing techniques have been used as needed to ensure that the materials will not be sitting in ponded water in the event of rainfall.

E. GEOMEMBRANE INSTALLATION

1. An initial CQA meeting will be held prior to installation (pre-deployment meeting). The Geomembrane Installer, CQA ENGINEER or his representative, and a representative of the OWNER will be in attendance. The following issues will be discussed and agreed upon by all parties and shall be included in a report in the CQA documentation.

   a. Testing of welds
   b. Characteristics of "good" weld, and
   c. Repair procedures

2. The CQA ENGINEER or his representative will mark all areas where grinding is considered to be excessive. The location and repair method for the excessive grinding will be recorded in the daily field reports. The method or repair will be determined by the CQA ENGINEER.

3. Overheating of the geomembrane will be monitored by the CQA ENGINEER or his representative. At the discretion of the CQA ENGINEER, coupons will be cut from the end of the extrusion seams and the bottom side of the seam will be observed for visible warping or

deformation. The location and repair method of overheated areas will be recorded in the daily field reports. The method of repair will be determined in the field by the CQA ENGINEER.

4. During seaming, the CQA ENGINEER or his representative will observe the seams for the following:

   a. proper preparation
   b. grinding technique, where applicable, and
   c. overheating

5. The CQA ENGINEER or his representative will observe the geomembrane during the coolest part of the day to check for slack. Any areas where excessive "trampolining" occurs will be marked by the CQA ENGINEER for repair by the Geomembrane Installer.

6. The CQA ENGINEER or his representative will mark all areas where the geomembrane indicates a protrusion from the compacted clay liner. The method of repair will be determined in the field by the CQA ENGINEER.

F. TEST SEAMS

1. Test seams shall be made each day prior to commencing field seaming. The seams shall be made on fragment pieces of geomembrane under the same surface and environmental conditions as the production seams to verify that seaming conditions are adequate. The test seams shall be made at the beginning of each seaming period; at changes of equipment, equipment settings, operator, weather, or sheet temperature; at the CQA ENGINEER's discretion, and at least once every four to six hours during continuous operation of each welding machine; or at change in material type (i.e., smooth-to-smooth seam versus smooth-to-textured seam).

2. The test seam sample shall be at least five feet long by one foot wide with the seam centered lengthwise. For dual track fusion welds nine, one-inch wide by six-inch long test strips shall be cut from the test seam. Quantitatively test three specimens for inside peel adhesion (peel), three for outside peel, and then three specimens for bonded seam strength (shear). For extrusion welds six, one-inch wide by six-inch long test strips shall be cut from the trial seam. Quantitatively test three specimens for peel and three specimens for bonded seam strength (shear).

3. A test seam sample shall pass when the results of the tests shown below are achieved in both peel and shear test and when the break can be described as a film tear bond. A film tear bond is defined as a failure in the ductile mode of one of the bonded sheets by tearing prior to complete separation to the bonded area.

   - Peel strength (fusion) – ASTM D6392
   - Peel strength (extrusion) – ASTM D6392
   - Shear strength (fusion & extrusion) – ASTM D6392

4. Test seams shall be repeated, in its entirety, when any of the test seam samples fail in either peel or shear. If additional test seams fail, the seaming apparatus or seamer shall not be accepted and shall not be used for seaming until the deficiencies are corrected and two consecutive successful full test seams are achieved. No welding equipment or welder shall be allowed to begin production welds until equipment and welders have a successfully completed test seam. Seaming shall not proceed when ambient air temperature or adverse weather conditions jeopardize the integrity of the liner installation. Installer shall demonstrate that acceptable seaming can be achieved by completing passing trial seams.

5. The remainder of the successful test seam shall be assigned a number and marked accordingly by the CQA ENGINEER, who shall also log the date, hour, ambient temperature, number of seaming apparatus, name of seamer, and pass or fail description. The sample itself should be archived until project completion.

G. FIELD DESTRUCTIVE TESTING

1. The Geomembrane Installer will obtain 12" x 60" samples of field seams, suitable for testing at the beginning of each day and after any break of 20 minutes or more for each welding machine used. The CQA firm may require additional destructive tests if there are reasons for same. The date, time and equipment, seam number, and seaming parameters will be marked on each sample and recorded by the CQA ENGINEER.

2. Samples retained will be tested in the field by the Geomembrane Installer. A minimum of five specimens from each sample will be tested in peel and shear (ASTM D6392) for the properties in the Seam Strength Table in this section.

SEAM STRENGTH AND RELATED PROPERTIES OF THERMALLY BONDED SMOOTH AND TEXTURED HIGH DENSITY POLYETHYLENE (HDPE) GEOMEMBRANE 60 MIL SHEET

Property	Units	Value
Hot Wedge Seams		
shear strength (1)	lb/in	120
shear elongation at break (2)	%	50
peel strength (1)	lb/in	91
peel separation	%	25
Extrusion Fillet Seams		
shear strength (1)	lb/in	120
shear elongation at break (2)	%	50
peel strength (1)	lb/in	78
peel separation	%	25

(1) Value listed for shear and peel strengths are for 4 out of 5 test specimens; the 5th specimen can be as low as 80% of the listed values. Average of all 5 must meet minimum specified value
(2) Elongation measurements should be omitted for field testing
(3) A maximum of one non-film tear bond failure out of a set of 5 tests is acceptable provided the non-film tear specimen meets strength requirements

If unresolved discrepancies exist between the CQA ENGINEER's and CONTRACTOR's test results, the archived sample may be tested by the CQA ENGINEER. Samples which do not pass the shear and peel tests will be resampled from locations at least 10 feet on each side of the original location. These two re-test samples must pass both shear and peel testing. If these two samples do not pass, then additional samples will continue to be obtained until the questionable seam area is defined.

3. The CQA ENGINEER or the OWNER may require additional random samples to be taken for testing in areas which visually appear defective and not in accordance with the project requirements.

At the end of each double wedge welded field seam of 100' or more in length, a 1" wide coupon is to be cut from near the end of the seam. This coupon is to be tested in peel using a field tensiometer. The CQA ENGINEER will observe this test and FTB type failures will be the criteria for preliminary acceptance of the production seam. (Final seam acceptance is contingent on air and destructive testing).

H. NON-DESTRUCTIVE TESTING

1. The CQA ENGINEER shall confirm that the geomembrane installer has conducted non-destructible testing of the entire length of all field seams in accordance with Section 02750 of the Technical Specifications. The testing method shall be approved by the CQA ENGINEER in advance.

2. Non-destructive testing will be observed by the CQA ENGINEER or his representative on a full-time basis.

I. DESTRUCTIVE LABORATORY TESTING

1. Destructive seam samples will be laboratory tested by the CQA ENGINEER. Testing frequency shall be one sample at the beginning of each day and after any break of 20 minutes or more for each welding machine used.

   a. Test samples will be at least 12" x 36". A minimum of five peel specimens will be tested for each sample in accordance with ASTM D6392 for the properties in the Seam Strength table in this section. At least five specimens from each sample will be tested for bonded shear strength (shear) in accordance with ASTM

D6392. These test samples shall be taken at the same locations as the CONTRACTOR's destructive testing samples.

b. All laboratory specimens will be conditioned for a minimum of one hour prior to testing at the Standard Atmosphere for Testing Geosynthetics, that is, air maintained at a relative humidity of 65 ±5% and a temperature of 21 ±2°C (70 ±4°F).

2. The load and elongation at failure will be measured for each specimen. FTB is the qualifying criterion.

a. The CQA ENGINEER will describe the type of failure for each specimen and record the presence of any disbonding, delamination, foreign material in the bond area, etc.

b. The criteria for determining passing welded seam shall be as stated in the "Seam Strength" table in this section.

c. If unresolved discrepancies exist between the CQA ENGINEER's and CONTRACTOR's test results, the archived sample may be tested by the CQA ENGINEER. Samples which do not pass the shear and peel tests will be resampled from locations at least 10 feet on each side of the original location. These two re-test samples must pass both sear and peel testing. If these two samples do not pass, then additional samples will continue to be obtained until the questionable seam area is defined.

SEAM STRENGTH AND RELATED PROPERTIES OF THERMALLY BONDED SMOOTH AND TEXTURED HIGH DENSITY POLYETHYLENE (HDPE) GEOMEMBRANE 60 MIL SHEET

Property	Units	Value
Hot Wedge Seams		
shear strength (1)	lb/in	120
shear elongation at break (2)	%	50
peel strength (1)	lb/in	91
peel separation	%	25
Extrusion Fillet Seams		
shear strength (1)	lb/in	120
shear elongation at break (2)	%	50
peel strength (1)	lb/in	78
peel separation	%	25

(1) Value listed for shear and peel strengths are for 4 out of 5 test specimens; the 5th specimen can be as low as 80% of the listed values. Average of all 5 must meet minimum specified value
(2) Elongation measurements should be omitted for field testing
(3) A maximum of one non-film tear bond failure out of a set of 5 tests is acceptable provided the non-film tear specimen meets strength requirements

J. REPAIRS

Any portion of unsatisfactory geomembrane or seam area failing a destructive or non-destructive test shall be repaired. Damaged geomembrane shall be removed and replaced with acceptable geomembrane materials if damage cannot be satisfactorily repaired. Installer shall be responsible for repair of damaged or defective areas. Agreement upon the appropriate repair method shall be decided between the CQA ENGINEER and the Installer. Procedures available include the following:

- Patching - Used to repair large holes, tears, undispersed raw materials and contamination by foreign matter;
- Spot Welding - Used to repair localized flaws (minor) or where geomembrane thickness has been reduced;
- Capping - Used to repair large lengths of failed seams; and
- Replacement - Used to remove the unacceptable seam and replace with new material.

In addition, surfaces of the geomembrane which are to be repaired by extrusion welds shall be lightly abraded with disc grinder or equivalent to assure cleanliness. All geomembrane surfaces shall be clean and dry at the time of repair. Patches or caps shall be extended at least six inches for extrusion weld and four inches for wedge weld beyond the edge of the defect. All corners of patch material shall be rounded.

The CQA ENGINEER shall number and log each patch repair, and the Installer shall non-destructively test each repair using methods specified in this plan.

K. FINAL INSPECTION

A final inspection shall be completed by the Installer, DESIGN ENGINEER, CQA ENGINEER and OWNER prior to the Installer demobilizing from the site. All identified problem areas shall be repaired by the Installer and accepted by the CQA ENGINEER prior to the Installer demobilizing from the site.

V. GEOTEXTILE

A. MATERIAL

1. The geotextile shall be a non-woven geotextile of polypropylene fibers or polyester yarns which is intended to be and shall be suitable for separation and cushioning. The cushion geotextile shall be a 12 ounce per square yard fabricand the separation geotextile shall be 6 ounce per square yard fabric.

2. During shipment and storage, the geotextile shall be protected from ultraviolet light exposure, precipitation, contamination or other damaging

conditions. Geotextile rolls shall be shipped and stored in relatively opaque and watertight wrappings. The CQA ENGINEER shall verify that rolls of geotextile have been shipped and are stored in accordance with the specifications.

3. All handling on-site is the responsibility of the CONTRACTOR or Installer. The CONTRACTOR or Installer is responsible for the submittal of shipping manifests and all other relevant documents to the CQA ENGINEER.

4. The CQA ENGINEER shall random sample from each shipment of geotextile delivered to the site, sampling a minimum of 10% of each shipment. The 3' x 3' samples shall be retained as part of the project records. Should visual inspection by the CQA ENGINEER reveal any apparent deficiencies in the material, the CQA ENGINEER shall at the OWNER's expense, take a minimum of two samples and have them tested for the properties listed in Section 02757 of the Technical Specifications.

B. GEOTEXTILE MANUFACTURER AND INSTALLER

1. The CONTRACTOR shall submit the following as obtained from the Geotextile Manufacturer to the CQA ENGINEER to review:

   a. Production Certification
   b. Material Certification
   c. Test Data for Material

2. The CONTRACTOR shall submit the following to the CQA ENGINEER prior to installation:

   a. Qualifications of installer superintendent, foreman and field crew.
   b. Six sets of field installation drawings.

C. INSTALLATION

1. The CQA ENGINEER will allow installation of the cushion geotextile to proceed after he has provided certification of the geomembrane liner or a section thereof.

2. The CQA ENGINEER shall monitor the installation of the cushion geotextile to verify there is no damage to the geomembrane liner. Should the liner be damaged the CQA ENGINEER shall require the necessary repairs to be completed at the CONTRACTOR’S expense.

3. The CQA ENGINEER or his representative shall be present during all placement operations and shall verify that all work is in accordance with the plans and specifications.

4. The CQA ENGINEER shall make a photographic record of all areas of the cushion geotextile and this shall be made part of the CQA Report.

5. The CQA ENGINEER shall make a photographic record of all areas of the sacrificial separation geotextile and this shall be made part of the CQA Report.

6 At the conclusion of this activity, the CQA ENGINEER shall provide a written certification that the work has been installed according to plans and specifications.

VI. LEACHATE COLLECTION SYSTEM

A. GENERAL

The CQA ENGINEER shall certify the materials and installation are in accordance with the plans, specifications, and this CQA Plan.

B. MATERIALS

1. Leachate collection piping shall be in accordance with Section 02745 - Leachate Piping of the Technical Specifications.

2. Crushed aggregate or river gravel for encasing leachate pipe and penetration assembly shall be clean washed gravel composed of a hard mineral such as quartz. Crushed aggregate or river gravel size shall be No. 57 in accordance with ASTM D448-86.

3. The cushion geotextile shall be a non-woven geotextile of polypropylene fibers or polyester yarns which are intended to be and shall be suitable for separation and cushioning. Geotextile shall be 12 ounce per square yard cushioning fabric. The area under the leachate collection gravel column shall have 2 layers of this 12 ounce per square yard material.

   The sacrificial separation geotextile over the gravel leachate collection column shall be non-woven geotextile of polypropylene fibers or polyester yarns which are intended to be and shall be suitable for separation and shall be minimum 6 ounce per yard.

4. The transition media shall be crushed aggregate or river gravel of a clean washed, hard, non-carbonaceous mineral such as quartz. The gravel size shall be ASTM No. 89 and in accordance with ASTM D448-86, NC DOT size No. 89, or NC DOT size No. 78M.

5. The CQA ENGINEER or his representative shall verify that all materials provided are those specified or are equal and are in accordance with the approved plans, specifications and this CQA Plan.

C. INSTALLATION

1. The CQA ENGINEER will allow installation of the leachate collection system to proceed after he has received all of the destructive test results of the FML and has reviewed and approved the FML as built survey.

2. The CQA ENGINEER shall verify there is no damage to the geomembrane during the installation of the leachate collection system. Should damage occur the CQA ENGINEER shall direct the CONTRACTOR to make the required repairs.

3. The CQA ENGINEER or his representative shall be present during all phases of the leachate collection system construction and shall verify that all work is in accordance with the approved plans, specifications and this CQA Plan.

D. QUALITY ASSURANCE

The CQA ENGINEER or his representative shall verify that the following are provided and installed in accordance with the approved plans, specifications and this CQA Plan. This shall include:

1. High Density Polyethylene Pipe

    a. Receipt of CONTRACTOR's submittals on materials

    b. Review of submittals for pipe

        1. compliance with applicable ASTM standard
        2. unit weight
        3. diameter and SDR
        4. physical dimensions
        5. method of jointing with instructions
        6. nominal pipe joint lengths
        7. re-ended bedding and installation details
        8. instructions and tables or information on strength of each pipe type versus bury
        9. conditions of depth and traffic loadings
        10. certification by manufacturer that material properties meet the values listed in the material properties sheet

    c. Secure certification that pipe supplied is represented by the quality assurance data.

    d. Reject pipe which does not meet appropriate ASTM Standards.

    e. Results of any samples taken by the CQA ENGINEER for testing.

    f. Witness and verify that jointing and installation is in accordance with manufacturer's re-endations and the specifications.

g. Leachate conduits external to the collection system are tested and demonstrated to be leakproof.

2. Crushed aggregate or river gravel

a. Receipt of CONTRACTOR's submittals on crushed aggregate or river gravel.

b. Review of submittals for conformity to specifications including quarry's certification of gradation.

c. Reject material which does not meet specifications.

d. Results of any samples taken by the CQA ENGINEER for testing.

e. Verify that crushed aggregate or river gravel encasement is in accordance with the approved plans, specifications and this CQA Plan.

3. Geotextile

a. Receipt of CONTRACTOR's submittals on geotextile and review for conformity to specifications.

b. Reject material which does not meet specifications.

c. Verify that geotextile is in accordance with the approved plans, specifications and this CQA Plan.

d. Results of any samples taken by the CQA ENGINEER for testing.

VII. PROTECTIVE COVER - ON LINER - NATIVE SANDY SOILS

A. GENERAL

The CQA ENGINEER shall certify the materials and installation are in accordance with the plans, specifications, and this CQA Plan.

B. MATERIAL

1. Soil for protective cover - native soils - on liner shall be classified according to the United Soil Classification System (USCS) (ASTM D2487-93). Liquid limit, plasticity index (PI), and percent passing the No. 200 sieve will be considered for proper classification. Construction Quality Assurance shall confirm the following minimum requirements:

Test	Minimum Frequency	Criteria
Permeability (ASTM D2434)	3,000 c.y.	k$1x$10^{-3}$ cm/sec

2. Soil materials shall be reasonably free of gypsum, ferrous, and/or calcareous concretions and nodules, refuse, roots, or other deleterious substances.

3. Continuous and repeated visual inspection of the materials being used will be performed by the CQA ENGINEER to ensure proper soils are being used. In addition, the CQA ENGINEER shall make frequent inspections of the placement operations and materials, and will consult with the site personnel on suitable materials and locations of such. All material shall be taken from select sources or stockpiles.

4. The protective cover native soils shall be uniform, smooth, and reasonably free of debris, rock, plant materials, and other foreign material larger than ¾ inch in diameter. The material should contain no sharp edges.

C. STOCKPILING AND MATERIAL APPROVAL

1. All material to be used as protective cover gravel and geotextile shall be approved in advance by the CQA ENGINEER. The CQA ENGINEER must verify the gravel meets all the material requirements.

2. Verification can be accomplished at source and during stockpiling or prior to use at existing stockpiles.

3. The CQA ENGINEER shall prepare reports of all testing, analysis, and verification.

D. CONSTRUCTION

1. The CQA ENGINEER shall provide verification of the following:

   a. Approved material was used to construct the cover.

   b. The protective cover was constructed in accordance with the approved plans, specifications, and this CQA Plan, which thickness shall be 12 inches.

   c. The required cover thickness was achieved.

   d. The geomembrane and geotextiles were not damaged during the construction of the protective cover.

2. Any time more than one dozer or loader is operating in the cell to spread protective cover, a second CQA technician shall be present in the cell to observe this work and to assure there is no damage to the FML.

VIII. PROTECTIVE COVER - ON LINER - SANDY SOILS

A. GENERAL

The CQA ENGINEER shall certify the materials and installation are in accordance with the plans, specifications, and this CQA Plan.

B. MATERIAL

Material for the sandy soil (protective cover) shall be a loose granular material resulting from the disintegration of rocks, shall be capable of 98% passage through a ½" screen and shall have no more than 5% by weight passing the No. 200 sieve. The protective cover material shall contain no aggregate rocks, debris, plant material, material with sharp edges, lignite, coal, ash, or carbonaceous material. By-products of industrial processes, with the exception of quarry grinding operations, shall not be accepted. The sandy soil (protective cover) material shall have a permeability of $k \geq 1x10^{-2}$ cm/sec.

Construction Quality Assurance shall meet the minimum requirements for the Granular Drainage Blanket as follows:

Test	Minimum Frequency	Criteria
Grain size to No. 200 sieve (ASTM D 422)	1,500 yd^3	98% < ½" and < 5% passing 200 sieve
Permeability (ASTM D 2434)	3,000 yd^3	k$1x10^{-2} cm/sec

C. STOCKPILING AND MATERIAL APPROVAL

1. All material to be used as protective cover sandy soils shall be approved in advance by the CQA ENGINEER. The CQA ENGINEER must verify the sand meets all the material requirements.

2. Verification can be accomplished during excavation and stockpiling or prior to use at existing stockpiles.

3. The CQA ENGINEER shall prepare reports of all testing, analysis, and verification.

D. CONSTRUCTION

1. The CQA ENGINEER shall provide verification of the following:

    a. Approved material was used to construct the cover.

b. The protective cover was constructed in accordance with the approved plans, specifications, and this CQA Plan, which thickness shall be 12 inches.

c. The geomembrane was not damaged during the construction of the cover. The CQA Engineer shall monitor the performance of the geomembrane leak location survey and documentation of geomembrane repairs in the CQA report.

d. The required cover thickness was achieved.

2. Any time more than one dozer or loader is operating in the cell to spread protective cover, a second CQA technician shall be present in the cell to observe this work and to assure there is no damage to the FML.

3. The CQA ENGINEER shall make a photographic record of all areas of the cushion geotextile and this shall be made part of the CQA Report.

4. The CQA ENGINEER shall make a photographic record of all areas of the sacrificial separation geotextile over the gravel leachate collection column and this shall be made part of the CQA Report.

IX. CERTIFICATION

A. The CQA ENGINEER will provide certification that the construction of the liner, leachate collection system, and other associated ancillary facilities for the particular landfill area are constructed according to the approved plans, specifications, and this CQA Plan. Said certification shall have the CQA ENGINEER's seal as a professional engineer registered in the State of North Carolina. The report shall be submitted as each cell or section is constructed and within 30 days of completion of a cell or section.

B. The Certification Report shall include assessments of the CONTRACTOR's compliance with the Construction Plans and Specifications and physical sampling and testing. The Certification Report shall also include statements summarizing the extent of construction, with special attention given to changes from the design plans. The report will certify the results of the various field tests and laboratory tests performed, and assess whether or not the constructed project is in compliance with the Construction Plans and Specifications the report shall include a copy of all test reports and field notes..

C. The project will not be deemed complete and acceptable until the North Carolina Department of Environment and Natural Resources Solid Waste Section has accepted the construction certification and all supplement reports and data as completed.

IV

OPERATION PLAN

OPERATION PLAN

PHASE 5 CONSTRUCTION PERMIT
EAST CAROLINA REGIONAL LANDFILL
BERTIE COUNTY, NORTH CAROLINA
PERMIT NO. 08-03

FOR

REPUBLIC SERVICES OF NORTH CAROLINA, LLC

DECEMBER 2012

HHNT

HODGES, HARBIN, NEWBERRY & TRIBBLE, INC.

Consulting Engineers

NORTH CAROLINA PROFESSIONAL SEAL 16136 ENGINEER WILLIAM F. HODGES

NORTH CAROLINA PROFESSIONAL SEAL 32249 ENGINEER K. MATTHEW CHEEK

NC. Corp. License No. C-0813

© Republic Services, Inc. (2012)

3920 Arkwright Road, Suite 101 | Macon, Georgia | Phone: (478) 743-7175 | Fax: (478) 743-1703

TABLE OF CONTENTS

Page No.

I. Introduction 1
- A. Ownership and Operation 1
- B. Objectives 1
- C. Regulatory Authority 1
- D. Landfill Restrictions 2
- E. Landfill Operator Responsibilities 3
- F. Owner Responsibilities 4
- G. Training 4

II. Site Operation & Maintenance 5
- A. Landfill Equipment 5
- B. Facilities Maintenance 5

III. Anticipated Land Use During Post-Closure 6

IV. Anticipated Life Expectancy 6

V. Method of Operation - MSW Landfill 6
- A. Landfilling/Operations 6
- B. Daily Operations 7
- C. Cell Filling/Stormwater Management 11
- D. Leachate Management 12
- E. Leachate Recirculation 16
- F. Random Inspection Program 21
- G. Waste Solidification 22
- H. Storm Drainage 22
- I. Monitoring 22
- J. Final Grades 23
- K. Seeding 24
- L. Maintenance 24
- M. Fire Hazard 24
- N. Open Burning 25
- O. Fire Prevention 25
- P. Odor Control 25
- Q. Vector Control 25
- R. Insect Control 25
- S. Litter Control 26
- T. Dust Control 26
- U. Landfill Gas Management 26
- V. Access Roads 26
- W. Equipment 26
- X. Buildings and Structures 26
- Y. Security 27
- Z. Signs 27
- AA. Phasing and Sequence of Fill 27

VI. Compliance with the Sedimentation Pollution Control Act of 1973 27

VII. Compliance with Design Requirements 28
A. Compliance with Explosive Gas Requirements 28
B. Compliance with Surface Water Requirements 28
C. Compliance with Ground Water Requirements 28
D. Compliance with Permit Requirements 28

VIII. Soil Material Types Available for Borrow 29

IX. Closure and Post-Closure Plans 29
A. Purpose 29
B. Closure Plan 29
C. Post-Closure Activities 31

X. Other Issues 32
A. Borrows Areas 32
B. Engineering Plan 32
C. Storm Debris Storage 33

XI. Closure of Leachate Storage Facilities 33

XII. Petroleum Contaminated Soil Alternate Daily Cover 34

XIII. Posi-Shell Cover System Alternative Daily Cover 35
A. Material Description 35
B. Requirements for Alternative Daily Cover 35
C. Procedures 36
D. Trial Period 36
E. Final Documentation 36

I. INTRODUCTION

The East Carolina Regional Landfill site is located north of Windsor, N.C. The MSW landfill is discussed in this Operation Plan.

The Landfill Operation Plan is a document to guide the facility operators in their daily activities. As such, it should be as comprehensive and as up-to-date as possible. The document should be updated during the construction period and during the facility operating life. As the Section rules change, revisions should be reflected in the updated document. Before operations begin, additional guidance documents on employee safety, environmental protection and monitoring, emergency procedures, fire fighting and prevention, hazardous waste identification, leachate pump/haul management, record keeping, and other subjects may be appended to this document.

This Operation Plan describes how the Facility, Engineering, and Closure Plans prepared for the East Carolina Regional Landfill will be implemented during the life of the facility. The plan has been prepared in compliance with Rules .1625 and .1626 of the North Carolina Solid Waste Management Regulations and consists of drawings and accompanying text that illustrates existing conditions, cell progression, waste placement and daily operations, leachate management, special waste management, buffer zones and soil borrow procedures.

A. Ownership and Operation

Ownership of the facility will be in the name of Republic Services of North Carolina, LLC, DBA East Carolina Environmental. Operational responsibilities will be handled by the General Manager, 252-348-3322 (phone), 252-348-3395 (fax). This facility is located at 1922 Republican Road, Aulander, North Carolina 27805.

The landfill is open to private and public waste haulers and the general public from 7:00 a.m. to 5:00 p.m. Monday through Friday, and on Saturday from 7:30 a.m. to 2:00 p.m. Three holidays are observed; Thanksgiving, Christmas and New Year's Day. These hours may be adjusted to meet unusual circumstances, operational needs or emergencies.

B. Objectives

The objectives of the Landfill Operation Plan are to:

1. Protect the environment.
2. Provide the operator with the intended methodology for operating the landfill efficiently.
3. Provide information about the site.
4. Provide operational parameters for State review.
5. Appropriately manage leachate at the facility.

C. Regulatory Authority

The Division of Waste Management - Solid Waste Section (Section) is the principal permitting and regulatory authority in North Carolina for solid waste management and disposal.

D. Landfill Restrictions

The East Carolina Regional Landfill can only accept those solid wastes which it is permitted to receive. The landfill owner or operator shall notify the Section within 24 hours of attempted disposal of any waste the landfill is not permitted to receive, including waste from outside the area the landfill is permitted to serve. A description of wastes which may be disposed of at this facility is included in this document. Also included in this document is a description of the Waste Screening Program for the site and a description of prohibited wastes.

The proposed landfill is permitted to receive municipal solid waste from North Carolina Counties and businesses. No radioactive waste, hazardous waste, yard waste, white goods, regulated PCB contaminated waste, lead acid batteries, or liquid waste material shall be disposed of on the landfill site. Any waste suspected of containing free liquids must be subjected to the "Paint Filter Liquids Test", and any material with free liquids shall not be disposed of in this facility. Any liquid containers five gallons or larger shall be empty, flattened, perforated, or rendered unable to contain liquids before they are accepted at the landfill for disposal.

Liquid/semi-solid materials may be solidified in accordance with the Waste Solidification Plan, attached in the Appendix. Only non-hazardous materials may be solidified. Following solidification, material will be subjected to a paint filter liquids test and, if the material no longer contains any free liquids, it may then be placed in the active landfill.

Asbestos waste that is packaged in accordance with 40 CFR 61, which is adopted by reference in accordance with G.S. 150B-14(c), may be disposed at the facility. In accordance with Section .1626(1),(d), the asbestos waste shall be covered immediately with soil in a manner that will not cause airborne conditions and must be disposed of separate and apart from the other solid waste at the bottom of the working face or in an area not contiguous with other disposal areas. Separate areas shall be clearly designated so that asbestos is not exposed by future land disturbing activities. A copy of 40 CFR Part 61 Subpart M – National Emission Standards for Asbestos will be utilized for guidance.

Spoiled foods, animal carcasses, abattoir waste, hatchery waste, and other animal waste delivered to the facility should be covered immediately. This immediate attention will reduce odors and the potential for vector feeding.

Wastewater treatment sludges may only be accepted for disposal in accordance with the following conditions:

- Utilized as a soil conditioner and incorporated into or applied onto the vegetative growth layer of the final or intermediate cover, in no case greater than 6" in depth.

- Co-disposed with Municipal Solid Waste since the facility meets the requirements of Rule .1624.

Industrial solid waste means solid waste generated by manufacturing or industrial processes that is not a hazardous waste regulated under Subtitle C of RCRA. Such

waste may include, but is not limited to, waste resulting from the following manufacturing processes: electric power generation; fertilizer/agricultural chemicals; food and related products/by-products; inorganic chemicals; iron and steel manufacturing; leather and leather products; nonferrous metals manufacturing/ foundries; organic chemicals; plastics and resins manufacturing; pulp and paper industry; rubber and miscellaneous plastic products; stone, glass, clay, and concrete products; textile manufacturing; transportation equipment; and water treatment. This term does not include mining waste, or oil and gas waste.
The operator should utilize the Waste Screening Plan for non-MSW type waste acceptance.

Republic Services of North Carolina has developed a Waste Screening Program in accordance with North Carolina's Solid Waste Management Regulations, Rule .1626(1)(f). This rule states that owners/operators of MSWLFs must implement a program at the facility for detecting and preventing the disposal of hazardous and liquid wastes, except as specifically authorized by the facility permit or by the Section. This program includes:

- Random inspections of incoming loads unless the owner or operator takes other steps to ensure that incoming loads do not contain regulated hazardous or liquid wastes, or regulated PCB wastes;
- Records of any inspections;
- Training of facility personnel to recognize regulated hazardous waste, liquid waste, and PCB wastes; and
- Development of a contingency plan to properly manage any identified hazardous and/or liquid wastes.

The Random Inspection Program is detailed in Section V. (F) of this Operation Plan.

E. Landfill Operator Responsibilities

The landfill operator has the authority and responsibility to accept or reject wastes as he deems necessary to comply with requirements of the permit and Section rules. The operator also has the authority to control waste received to ensure that unauthorized, difficult to manage, or prohibited waste will not be disposed of in the landfill. Responsibilities of the operator are to:

1. Determine whether waste brought to the landfill is to be placed in the landfill,
2. Provide proper maintenance,
3. Provide for satisfactory monitoring, and
4. Inform the Section within 24 hours of operational problems or violations, and maintain records in accordance with permit requirements and Section rules.

In accordance with NCGS 130A-309.09D, on or before August 1 of each year, Republic Services of North Carolina will report to the Solid Waste Section the amount of waste received in tons at this facility and disposed in the landfill units. Data will be transmitted on forms prescribed by the Section. The report will include the following:

- The reporting period shall be for the previous year beginning July 1 and ending on June 30.

- The amount of waste received and landfilled in tons, compiled on a monthly basis by county or transfer station of origin and by specific waste type if diverted to a specific unit within the permitted facility; and
- The completed report shall be forwarded to the Regional Waste Management Specialist for the facility.

F. Owner Responsibilities

An agreement exists between Republic Services of North Carolina, LLC and the Bertie County Board of Commissioners. In the agreement, Republic Services of North Carolina, LLC is responsible for developing and operating the Landfill and related facilities.
Tipping fees will be set according to type of waste and quantity of waste. Other responsibilities of Republic Services of North Carolina, LLC are to provide manpower and equipment for the landfill directly or through contract operations, and to set operations policy.

G. Training

Republic Services of North Carolina, LLC will utilize both internal company training and outside continuing education for the landfill operations personnel. The operations personnel operating the site will be supervised and trained by certified landfill operators. These personnel will receive internal company training in operations, reporting, monitoring, environmental compliance, and facility maintenance.

This internal training will be repeated and updated on a periodic basis.

Off-site outside training will be scheduled as course offerings are announced.

Operation of the site will include specialized training in the operation and maintenance of the following:

1. Leachate pump stations / sideslope riser pumps / gravity leachate sewer collection systems.
2. Leachate storage tanks/secondary containment system.
3. Stormwater management.
4. Hazardous waste identification.
5. Prohibited waste identification.
6. Leachate recirculation
7. Waste solidification
8. Tipper operation
9. Landfill gas operations
10. Installation of initial (fluff) lift in the cell.

Records of personnel training shall be maintained in the facility operating record.

II. SITE OPERATION & MAINTENANCE

A. Landfill Equipment

Operation and maintenance of the site will be the responsibility of the landfill General Manager. Typical heavy equipment available are as follows:

1. An Excavator with an off-road haul truck
2. Water Truck
3. Farm Tractor and Mower
4. Steel Wheel Compactors
5. Dozers
6. Pick-up Trucks
7. Trailer Tippers
8. Mechanic's Service Truck
9. Posi-Shell Application Equipment (optional)

Other equipment will be purchased or rented as required for the facility operations.

B. Facilities Maintenance

The following is a list of maintenance duties of the operator:

1. Maintain paved, graveled, and temporary roads in and to landfill operations to ensure safe and unencumbered movement of traffic.

2. Maintain condition, visibility, and integrity of informational signs.

3. Maintain physical barriers to discourage unauthorized entry onto landfill property by unauthorized vehicles.
4. Maintain slopes by filling and (re)establishing vegetative cover to prevent erosion and/or exposure of refuse.

5. Maintain grassed areas.

6. Maintain drainage features such as swales, stormwater conveyance channels, and slope drains to ensure efficient management of stormwater.

7. Maintain site in a sanitary condition.

8. Maintain windscreens and keep blown litter from leaving site by frequent policing efforts within landfill and on adjacent property.

9. Maintain effective rodent and vector control measures.

10. Maintain communication with fire department personnel and establish a plan of operations for fighting fires.

11. Maintain and protect landfill cells and embankments against erosion and damage.

12. Maintain (regrade subsided) or settlement fill areas.

13. Maintain sediment storage volume of sediment basins.

14. Maintain the landfill scales.

15. Maintain and operate the leachate management system.

16. Maintain appropriate records and operations demonstrations.
17. Use temporary control measures to prevent stormwater from contacting the waste and becoming leachate.

18. Maintain support facilities.

19. Maintain the landfill gas system.

20. Maintain wetland boundaries.

III. ANTICIPATED LAND USE DURING POST-CLOSURE

After completion of the landfill, the projected land use will be to return the land to greenway and to woodlands, grasslands, or wetlands elsewhere on the property. The final closure will be completed to reduce maintenance during the post-closure care period. All areas of the closed site will be vegetated to reduce the long term potential of erosion.

IV. ANTICIPATED LIFE EXPECTANCY

Based upon available data provided by the State of North Carolina, a waste generation rate of 5 lbs/capita/day was used to calculate yearly volume of waste. A projected waste volume compaction rate of 1,400 lbs/cy of in-place waste was used to calculate the volume needed in the landfill to dispose of the waste. The life of the landfill was calculated by using waste stream projections. It has been estimated that the total life of the landfill will be over 21 years. The life for Phase 5 will be approximately five years. During the next five years, it has been estimated that Bertie County and the region serving the facility will generate approximately 1,043,000 cy/year of compacted solid waste to be landfilled at the site. The area to be served by the facility includes all cities, counties and commercial / industrial facilities in North Carolina.

V. METHOD OF OPERATION - MSW LANDFILL

A. Landfilling/Operations

The landfilling operation will be comprised of solid waste being deposited on the working face of the landfill. Steel wheel compactors will be used to obtain maximum compaction of the waste by compacting at two to six foot depths of waste at a time, and by confining the area to be compacted daily.

The exception to this is the first lift which will be installed approximately eight feet deep with limited steel wheel compaction. This initial eight foot lift (known as a fluff

lift) will generally be placed with dozers since this greatly reduces the risk to the liner system, especially with a 12 inch thick protective cover over the liner. Once fill reaches approximately eight feet, steel wheel compactors will be used to place and compact the waste. If the working face is confined to a minimum area on a daily basis, this will economize the amount of daily cover or alternative daily cover (ADC) required. Per North Carolina State Regulations, a daily cover of six inches of compacted soil or an alternative daily cover must be placed on top of the daily landfill operation to protect the landfilled garbage from exposure to rain and becoming windborne, and to prevent rodent and insect propagation or infestation. Once an area of the landfill is complete, that is, achieves final grades, a cover system (cap) will be placed as final cover and this will be seeded and stabilized. A sequence or phasing of the filling operations and final cover (cap) cross-sections are indicated in the Engineering Plans. Compost materials may be included in the final cover top layer if first demonstrated to the Section, then approved by the Section.

B. Daily Operations

1. Placement of solid waste will begin in the initial fill area of the landfill. Extreme care should be used with the installation of the fluff lift and prior to any waste going in the cell, a training session will be conducted with all “in cell” personnel to discuss care of the protective cover system and the FML liner.

2. A photographic record should be maintained during the fluff lift installation to demonstrate there was no degradation of the protective cover, the leachate collection gravel column or the FML.

3. Wastes should be kept to the minimum surface area possible and compacted via numerous passes of the steel-wheel compactor. Surface area (active landfill area) should be kept to a minimum for two reasons: (1) to minimize the amount of daily cover soils or ADC needed and, (2) to maximize the amount of garbage (not soils) being placed; thereby, increasing the life of the landfill.

   Waste placed against the outer berms along the permanent outer edge of the cell shall be no closer than 15' to this edge of liner. By stopping at the inside edge of this berm, the operator will be placing waste no closer than 15' from the permanent edge. Waste placed against the interior berms between cells, shall be no closer than 10' to this edge. This will allow ample room for new liner to be tied to existing liner in the future cells.

   After the first lift is in place, compaction berms may be installed at the outer edge. Trucks will unload their waste at the working face. The waste will be compacted against the compaction berm and up the working face. These outside compaction berms will serve several purposes:

   a. The small berms give the operator guidance on where to place waste to ensure that the outside slope can be constructed quickly and accurately and,

b. The small berms give the operator a structure to compact against, keeping him from pushing waste out and over the outer slope of the landfill.

The phasing plan in the Engineering Plans should be followed. It is the intent (to the extent that safe operations on a sloped surface allow) that an area be brought to the maximum elevation possible before moving landfilling operations into an adjacent area. Further, it is intended that final contours be achieved as early as possible so as to direct run-off of stormwater away from the working area.

Sequencing of areas in the proper order is necessary to manage the storm water.

3. It is important to remember that decaying wastes will eventually generate leachate and methane (landfill gas). Methane is an explosive gas which is lighter than air and thus can be trapped underneath structures and equipment. The operator should have the landfill boundaries and structures tested for methane gas concentrations at least quarterly and instruct all personnel in its dangers. Methane is a component of landfill gas that is odorless and thus cannot be detected except by proper equipment.

Gas Monitoring Procedures:

Landfill gas monitoring at the East Carolina Regional Landfill will be performed during the active life of the landfill and throughout the post-closure care period. At a minimum, quarterly monitoring will be conducted at all subsurface methane gas monitoring probes and in all structures located on the landfill property.

Methane gas monitoring probes will be installed on the site as additional phases are constructed. They will be designed to extend to a depth at least equal to the maximum depth of waste in the area of the monitoring point or the water table, whichever is encountered first. Probe locations will likely be field engineered due to varying topography adjacent to expansion areas that may limit access with a drill rig. A methane gas monitoring probe detail can be found in the Engineering Plans. Construction records for the methane gas monitoring probes will be submitted to the Section upon completion.

Active landfill gas extraction wells have been and will continue to be installed in the waste mass prior to closure in accordance with the facility's Air Quality Title V Operation Permit and Air Quality Permit No. 08849T03 dated February 10, 2006. Construction details of these wells is included in the NSPS design plans. Any expansion or addition to the existing landfill gas collection system will be submitted to the Solid Waste Section prior to implementation.

Record Keeping: The operator will record the date, time, location, sampling personnel, atmospheric temperature, reported barometric pressure, and general weather conditions at the time of sampling, in

addition to the concentration of combustible gases. The records will be maintained in the facility operating record.

On-site Structures: Gas monitoring in on-site structures will attempt to identify the "worst case" concentrations. The monitoring locations will be in corners along floors and ceilings, at cracks in the floor, and at other areas likely to accumulate gas. Gas monitoring will also be conducted in any confined space requiring the entry of personnel for maintenance or inspection. The monitoring will take place prior to entry by personnel in accordance with OSHA regulations.

Methane gas monitoring probes: Gas monitoring in probes will consist of attaching the combustible gas monitor to each tubing within the probes, and recording both the initial concentration and steady state concentration of combustible gases.

Equipment: A portable combustible gas monitor, measuring the concentration of combustible gases in units of percent of lower explosive limit, shall be used to conduct gas monitoring. Lower explosive limit (LEL) means the lowest percent by volume of a mixture of combustible gas in air that will propagate a flame at 25 degrees Celsius and atmospheric pressure. The gas monitor shall be calibrated to methane using the manufacturer's calibration kit and procedure before the monitoring activities begin.

Response to Landfill Gas Exceedances

The regulatory maximum levels for explosive gas are the LEL at the facility boundary and 25% LEL in on-site structures. At a minimum, the following actions will be taken if methane gas levels exceed those standards:

1) The Section will be notified immediately;

2) Immediate steps necessary to protect human health will be identified and implemented. If the standard in structures is exceeded, these will include:
   - Elimination of smoking materials and all ignition sources;
   - Evacuation of all personnel;
   - Ventilation of the structure;
   - Personnel will not be allowed to re-enter the building except to perform gas monitoring until the results of additional monitoring indicate that methane concentrations are stabilized below 25% LEL;
   - Assessing the origin and pathways of the gas migration.

Within seven days of detection, the monitoring results will be placed in the facility operating record, and Republic Services of North Carolina will indicate actions taken and actions proposed to resolve the problem. Within 60 days of detection, Republic Services of North

Carolina will develop and implement a landfill gas remediation plan for the combustible gas releases, place a copy of the plan in the operating record, and notify the Section that the plan has been implemented. The plan will describe the nature and extent of the problem and the proposed remedy.

4. Daily cover soil for operations will be obtained from the future cell areas or other sources. A grading plan has been developed to define excavation limits (see Phase 5 Engineering Drawings) and to designate the three principal soils applications: (1) topsoils, (2) clays for liner construction, and (3) soils for daily cover. Prudent excavation and control of drainage from the excavation will save considerable construction costs on the landfill.

   The operator may also choose to use alternative daily cover. Alternative cover will not be allowed in place of intermediate or final cover. Use of alternative cover will be specified in the permit and is subject to the Operator's demonstrations and the Section's approval. Currently at this facility, tarps, petroleum contaminated soils (PCS), and posi-shell are approved for use as alternate daily cover (ADC). The site may use additional alternative daily covers, such as yard waste type compost/mulch, automotive shredder residue (ASR), foam, shredded wood, crushed gypsum, C&D fines, foundary sand, paper pulp sludge, and alum sludge in the future. However, these additional ADC's must be approved by the Section in accordance with 15A NCAC 13B .1626(2)(b) prior to any use of such.

   The daily working face shall be minimized at all times. This working face will include the top surface and sloped face to be covered at the end of each day.

   ADC is intended to reduce the facility's reliance on soil cover and to reduce the air space consumption by daily soil cover. However, should the ADC prove unsuccessful, the daily cover consisting of a minimum of 6" of soil must be utilized.

   Alternative covers may be approved by the Section if the owner or operator demonstrates that the alternative material and thickness control disease vectors, fires, odors, blowing litter, and scavenging without presenting a threat to human health and the environment.

   Republic Services of North Carolina may utilize tarps, approved PCS, and posi-shell as described below.

   - If a tarp ADC is used, the cover shall be deployed over the deposited solid waste at the end of each day by pulling the cover into position by the available heavy equipment and anchoring by placing soil over the corners of the fabric. The tarps are not expected to exceed 250 feet by 250 feet in size and can be easily placed by the available personnel and equipment. Multiple smaller tarps may also be used in accordance with the method described above. Prior to

depositing solid waste the next working day, the tarp will be pulled from the waste with the available heavy equipment and stored in accordance with the manufacturer's recommendation.

- Use of Petroleum Contaminated Soil (PCS) as daily cover materials is a beneficial reuse of soil with relatively low levels of petroleum in the soil. The approved maximum petroleum contaminant level of soil will be 3,000 parts per million (ppm). Conditions for the use of petroleum contaminated soils as alternate daily cover (ADC) are included in Section XII of this Operation Plan. A form for use during acceptance of PCS soils is attached in the Appendix.

- When posi-shell ADC is used, the posi-shell cover shall be placed in accordance with the manufacturer's recommendations as stated in the approved permit.

When weather and soil conditions so dictate, daily cover soils are available from the stockpiles. The operator should replenish depleted stockpiles by excavating from the future cell areas or permitted borrow areas to the limits indicated.

5. It will be necessary for operators to grade, repair and smooth the landfill surface as needed and to capture and replace soils that may have migrated to the surface drainage features or sediment basins and traps. These materials should be stockpiled, allowed to drain and utilized for daily cover.

C. Cell Filling/Stormwater Management

The landfill cells will be typically filled from the lower elevations toward the upper elevations in initial lift (fluff lift) of approximately eight feet. No steel wheel compaction equipment shall be placed in the landfill cell until there is an eight foot (plus or minus) mat of waste in that portion of the cell. Care shall be used to assure that the material placed in this initial lift will not be capable of penetrating the 12 inches of protective cover over the liner. Penetration of waste through this protective cover could damage the FML liner.

The operator must use extreme care in managing the initial cell filling. In the area of the cell above the waste being placed in an initial lift, the operator shall have installed stormwater rain flaps to prevent stormwater from flowing onto the cell area being filled.

As the fluff lift is placed, the sacrificial geotextile over the 24 inch thick gravel leachate collection column shall be removed to expose the gravel. The operator must use care to assure the gravel is not disturbed by the installation of the fluff lift. A photographic record demonstrating the fluff lift installation shall be made part of the facility operating record.

The stormwater rain flaps should be placed so no area larger than two acres can drain directly into the leachate collection system. Based on a 5 inch storm event, up

to 272,000 gallons could enter the leachate collection and storage system. It is unlikely that this full amount of rainfall would enter the system since any open cell will have some waste in it and even limited amounts of waste and sand will retain a percentage of the rainfall event.
Stormwater above each of these rain flaps shall either be diverted, or pumped from the cell. Once this initial lift of waste is in place with an intermediate layer of soil, gravity drainage on top of the intermediate cover will be used.

The stormwater rain flaps will be removed as the waste filling progresses to their location. In addition to their removal, the leachate collection pipe shall be connected to drain the leachate from that next portion of the cell. The stormwater rain flaps serve only the initial lift of the landfill.

As a rule, any water that directly contacts waste will be defined as leachate. Any water that is diverted away from the waste, and does not contact any waste, is defined as stormwater. Leachate will be managed in the leachate management system and stormwater shall be directed to the stormwater management system.

D. Leachate Management

Leachate is the liquid waste generated as stormwater passes through the landfill waste mass. In the landfill, this leachate is collected by a system of perforated pipes and sand media on top of the base liner system. In cells 3 through 11, the leachate flows by gravity through this system to a leachate penetration assembly and then leaves the lined landfill via gravity mains to leachate pumping stations. The leachate is pumped from the pumping stations to one of two leachate storage tanks. In cells 12 through 14, leachate will flow by gravity to a leachate sump where it will be pumped through a force main into a leachate manhole located due west of cell 11. From there it will travel via gravity mains to existing leachate pumping stations and from there to the leachate storage tanks. Leachate will be stored in the tanks until it is periodically transported to an acceptable treatment facility, or is recirculated or irrigated onto the lined cell areas. The leachate storage tanks are glass lined steel tanks capable of holding at least thirty days volume of leachate. For this site, a 250,000 gallon tank and a 162,000 gallon tank are provided. These tanks have separate secondary containment structures capable of holding 110% of the tank volume. This is a sealed containment so it will be the operator's responsibility to pump off uncontaminated stormwater from the secondary containment. These tanks have been designed so that leachate may be transferred from one tank to the other to aid in leachate management.

The chemical composition of untreated leachate generated will be analyzed, at a minimum, semi-annually. The leachate samples will be collected from the leachate storage tank sampling port and shall be analyzed for the Detection Monitoring constituents (EPA Appendix I list for Detection Monitoring as incorporated by reference in Rule.1633), as well as pH, specific conductance, BOD, COD, TSS, phosphate, nitrate, sulfate. Test results will be submitted to the Section.

The leachate management system is sized based on the "Hydraulic Evaluation of Landfill Performance Model" (HELP Model), developed by the U.S. Army Corp of Engineers for the Environmental Protection Agency. The HELP Model cases, runs, and results are included with the leachate system design calculations.

In addition to using the HELP Model to size the leachate management systems, the following design standards, which exceed the North Carolina minimum design standards, shall be incorporated.

1. All leachate collection lines shall be a minimum of 8” diameter instead of the North Carolina minimum of 6” diameter.

2. All leachate lines shall have a minimum 10’ wide leachate collection column of ASTM #57 stone to serve as both a filter for the leachate pipe and as a redundant flow path for leachate in the event the leachate pipe somehow becomes clogged. This column shall extend from the base liner upward for at least 24 inches. It should be noted that the adjacent protective cover is 12 inches thick and the gravel leachate collection column is 24 inches thick. This gravel redundant flow area is roughly 50 percent void space of the 16 square foot gravel column for an 8 square foot flow area, which is many times the area of the 8” diameter leachate pipe and an even greater ratio when compared to the North Carolina standard 6” diameter leachate collection pipe.

3. Where a 12 inch thick protective cover system which utilizes natural sand, manufactured sand, or native soils is used, there shall be a 2 foot wide by 12” thickness of ASTM #78 or #89 stone filter media to assure fines in the protective cover system do not enter the ASTM #57 gravel column.

4. All sideslope riser sumps shall have a double layer of Geosynthetic-Clay Liner (GCL) above the clay or low permeability soil liner and below the Flexible Membrane Liner (FML).

5. All sideslope riser pumps shall have a flow meter which shall be monitored no less than weekly, with the results to be placed in a tabular chart in the Facility Operating Record.

6. Leachate collection lines shall be cleaned with jet action within 12 months of permit issuance and then once every five years thereafter. If a blockage is encountered, camera monitoring of the line shall be done.

7. If at any time North Carolina Department of Environmental and Natural Resources – Solid Waste Section has evidence of a line blockage, based on their observations and review of the records, the landfill will upon receipt of a written request for a camera inspection, conduct same within 90 days of such written request, with the tape/disk of the inspection made available to the Solid Waste Section.

The site currently contracts with a third party contractor to perform inspections and maintenance on the pump and control system on a semi-annual basis. In addition, the facility will continue monitoring leachate flows in those cells with sideslope riser pumps and the tank levels on a weekly basis. The pump inspections will record flow data, pump hours, and leachate levels on a leachate pump log. This log will continue to be reviewed on a monthly basis for flow and pump issues. This data is compared to historical leachate generation data to understand and predict existing and future flows. In cells with sideslope riser pumps, monitoring of the pump hour meter and flow meter provides a good early warning system when pumps are down.

If the pump hour meter is changing and the flow meter is not, this indicates a possible blockage at the check valve. If neither the pump hour meter nor the flow meters are changing, this indicates a possible electrical or pump control issue. Leachate flows in cells with penetration assemblies will be monitored by visual observation at each manhole. Valves in these gravity lines will be tested to ensure proper functioning.

Pump drawdown tests are performed in cells with sideslope riser pumps when observations indicate a significant drop in daily flows from a particular cell or when pump hour meter readings are higher in a given month than normal. The test is performed by manually operating the pump and timing the drawdown to a lower level and then timing how long it takes for the level to recharge back to the higher level. The test is repeated three to four times. A fast drawdown and recharge time typically indicates sediment build-up and reduced storage volume in the sump area. When this condition is encountered, a vacuum truck is scheduled to come and vacuum out the sump. The pump drawdown tests are repeated to verify proper functioning. If pump drawdown tests results have not improved, jet cleaning of the sump and lines may be performed.

On a five year interval, a high pressure water jet cleaning device shall be introduced into the leachate lines to irrigate and renew the filter pack around the perforated leachate line. Debris dislodged by this effort shall be removed from the leachate line / sump with a vacuum truck. The dislodged material and associated cleaning water shall be disposed of properly.

The site currently contracts with a third party firm for semi-annual maintenance inspection of leachate collection pumps and leachate transfer area pumps. These inspections included a detailed checklist of the control panel, electrical, pump, flow meter, risers, wet wells, and additional items. All data collected is compared to the last system inspection report and a detailed service report record is generated for each pump. These reports will be included in the facility operating record.

The operations of the leachate storage and treatment plan should include the following:

1. The tank filling is handled by automatic level controls on the leachate pumps.

2. When the combined tank capacity reaches 50%, removal of leachate should begin.

3. Should the tank filling exceed 60% of the capacity of both tanks during normal operations, the operator should utilize additional measures to expedite removal of the leachate.

4. Unless other provisions are made, all leachate shall be transported to an approved wastewater treatment facility, or it shall be recirculated into the waste mass.

5. On a weekly basis, inspect the secondary containment systems and the tanks for any leaks. If none are present, record the inspection, and then pump off any accumulated stormwater. Place the inspection reports in the operating record.

6. Records shall be maintained by the landfill operator of the following:
   a. Daily volume of leachate generated
   b. Daily volume of leachate recirculated into the waste mass
   c. Analytical records of leachate quality
   d. Records of days when stormwater is pumped from the secondary containment systems
   e. Weekly inspections of the leachate tanks
   f. Daily inspections of the leachate pump stations or sideslope riser pumps
   g. Weekly volume of leachate in the tank
   h. Records of any equipment breakdowns
   i. Maintenance records
   j. Removal of the sacrificial geotextile over the top of the 24" thick gravel leachate collection column.

Special attention should be given to managing rainfall events to reduce, as much as possible, the surge volumes caused by these events. A major part of this leachate management is discussed in item C - Cell Filling/Stormwater Management. In that discussion, it is recognized that it is possible that a 5 inch rainfall event (over a 2 acre subcell) could create a surge of up to approximately 272,000 gallons of stormwater (initial lift only) that would require treatment as leachate. This event could be handled by all components of the leachate management system including the storage tanks if leachate is removed from the tanks during and immediately following the rainfall event.

Operations require the normal level of the combined tanks to be below 50% full. And in addition, the operations require expedited removal of leachate any time the tanks approach a 60% full condition. The 50% full tanks would have a remaining volume of about 206,000 gallons. This, along with short term storage available in the cells, would be adequate to hold the surge volumes discussed in this section.

Should this storm surge occur when the filling was being done in the initial lift of a cell, it would produce a very low strength or very dilute leachate. As a contingency, Republic Services of North Carolina, LLC will continue discussions with alternative wastewater treatment facilities to accept this potential surge volume of dilute leachate. Also, this leachate can be recirculated through the waste mass. Leachate recirculation will be accomplished by returning the leachate to the landfill where it will be distributed through a leachate recirculation trench or irrigated onto grassed areas of the lined cells.

Also, Republic Services of North Carolina, LLC may negotiate contracts with commercial handlers of industrial wastewater for the treatment of any surge volumes.

Areas of special attention by the landfill operator include:

1. Maintain the cell internal stormwater rain flaps to assure segregation of stormwater from the leachate. The operator should use reasonable measures to minimize leachate generation throughout the landfill operating life.

2. Maintain cross slope and surface drainage on the landfill top to promote run-off of stormwater. Any stormwater that can be drained from the surface above the waste will not contribute to the leachate generation.

3. Pump off stormwater in the cell that is segregated from contact with the waste fill area.

4. Inspect the leachate storage tanks and the secondary containment systems. Maintain removal of leachate from the tanks, and pump off stormwater from the secondary containment system.

With aggressive leachate management activities by the operations personnel, stormwater surges caused by rainfall events as great as the 25 year rainfall event can be handled by the system. Contingency for events that potentially exceed this event include:

a. Establish relationships with other leachate treatment facilities to handle potential surge volumes of leachate.

b. Establish a relationship with a commercial wastewater handler for potential surge volumes of leachate.

Should this contingency plan ever be activated, records should be kept documenting all activities related to the event. These should be maintained in the operating record of the site.

E. Leachate Recirculation

The Section approved leachate recirculation at the East Carolina Landfill as a liquids management tool in a letter dated May 28, 2003. At that time, no further reports regarding leachate recirculation were required to be submitted to the Section, although the right to ask for future reports was reserved.

1. The following conditions will be met and followed by East Carolina Environmental prior to and during the leachate recirculation:

   a. Rain gauge and thermometer

      A rain gauge and thermometer will be installed near the landfill office. These instruments will be read daily at the start of business. The amount of rainfall and temperature will be recorded on the leachate recirculation log.

   b. Base line sampling of leachate

      The base line sampling of the leachate has been performed. This sampling and testing will continue on a semi-annual basis. The reports will be kept on file at the landfill office in the Facility Operating Record.

c. Operational procedures

Recirculation will be accomplished by pumping leachate from the leachate storage tank through dual contained piping from outside the leachate tank secondary containment to the landfill cell. Once inside the landfill cell, the pipe will not be dual contained. The leachate will be injected into a leachate recirculation trench (4' to 6' below top of waste surface) consisting of pipe, stone, and fabric. Alternatively, leachate may be used for irrigation of vegetated areas over the composite liner system.

Leachate will only be recirculated over composite liner systems having a 2' thick clay liner with permeability # $1x10^{-7}$ cm/sec, a minimum of 60 mil FML liner, and a 2' protective cover with permeability $ $1x10^{-2}$ cm/sec. Leachate recirculation will not be allowed over alternate liner systems unless specifically approved by the Section.

i. The procedures to be used for injection into the recirculation system are as follows:

(a) Check the operation of the pump and valves at the leachate tank and the leachate recirculation trench.

(b) Calculate the volume of leachate that the waste mass can accept.

(c) Record the volume and method of leachate being recirculated into the landfill on the leachate recirculation log.

(d) Distribute the leachate through the force main into the leachate recirculation entry point. This entry point will be either an above grade sprinkler system or an above grade vertical 8” diameter solid pipe where leachate can be discharged for entry into the subsurface leachate recirculation system. Care should be used to assure the pump’s discharge rate does not exceed the entry point's capability to accept the leachate. Overflow of the entry point is not allowed.

(e) At conclusion of recirculation activity, inspect cell for excess leachate concentrations or blow-outs. The recirculation system will be inspected daily to check for leachate overflows. These inspections will be recorded and maintained in the Facility Operating Record and the leachate recirculation log. Do not allow discharge of leachate outside the cell under any circumstances.

ii. Complete the Leachate Recirculation Log Form and make notes of problems or corrections needed. A copy of this form can be found in the Appendix of this Operation Plan. (Copies of these logs will also be maintained on-site for review by the Section.)

iii. The recirculation system and the area in which leachate is being recirculated will be inspected daily during recirculation operations to check for excess leachate concentrations, leachate run-off, or blow-outs. Results of these inspections will be recorded and maintained in the Facility Operating Record and the leachate recirculation log.

iv. Should run-off or side seepage be noticed, leachate recirculation will be ceased. Discharge of leachate outside the cell will not be allowed in any circumstances. Any seepage will be covered and compacted with 12" of soil and these remedial activities will be recorded and placed in the Facility Operating Record.

Recirculation will be accomplished by one of three methods: recirculation via subsurface infiltration trenches, irrigation of grassed areas, or direct application to the working face using spray on methods.

Leachate will also be recirculated using an agricultural irrigation system which sprays leachate on areas of the landfill which have received intermediate cover and are grassed. Recirculation rates shall vary based on season and recent precipitation rates. Leachate will only be recirculated over cells with the composite liner systems having a 2' thick compacted clay liner with a maximum permeability of $1x10^{-7}$ cm/sec, a minimum of 60 mil FML, and a 2' thick protective cover with a permeability $\geq 1x10^{-2}$. Leachate recirculation will not be allowed over alternate liner systems unless specifically approved by the Section.

d. <u>Equipment Required</u>

The following equipment will be used for leachate recirculation (at a minimum):

i. Centrifugal pump (mounted inside secondary containment of the leachate tank) with force main to landfill cell.

ii. Drawings showing the recirculation lines, injection point and orientation to cell sideslopes.

iii. Agricultural irrigation sprinkler system

e. Recordkeeping Forms

Logs will be maintained for leachate production and leachate recirculation. These logs will be kept in the Facility Operating Record for review by the Section.

i. Daily/weekly record of leachate generated.

Daily, the volume of leachate in the leachate storage tanks will be recorded on the leachate log. The leachate log will be made part of the Facility Operating Record.

ii. Daily/weekly record of leachate recirculated.

Daily, the volume of leachate recirculated will be recorded on the leachate log. The leachate log will be made part of the Facility Operating Record.

iii. Weather conditions and other pertinent daily information.

Daily, the weather conditions along with any other data pertinent to leachate recirculation will be recorded on the leachate log.

f. Log for reporting operating or other unusual problems

A log will be kept for reporting operating or any other unusual problems for leachate recirculation. All actions taken to remediate any problems due to leachate recirculation will be documented and recorded in the Facility Operating Record. A trained landfill operator will be responsible for overseeing the leachate recirculation operation.

g. Other forms or procedures, etc. that owner/operators will use

Any additional forms or procedures (as required) not found in this plan will be maintained in the Facility Operating Record.

h. Analysis of the field capacity of the waste where leachate is to be applied

Based on previously submitted information, the capacity of the leachate collection system will allow a maximum of 2,188 gallons per acre per day for cell areas with a waste depth greater than or equal to 50'. The average daily recirculation rate should not exceed this rate. These values are based on values obtained from previous HELP Model evaluations on the existing liner system. It is estimated that the existing leachate recirculation system will impact approximately 2.3 acres of liner. Therefore, a conservative maximum daily recirculation rate for the leachate recirculation system is set at 5,000 gallons per day.

Expansion of the leachate recirculation system will allow for an increase in the maximum recirculation rate. The leachate recirculation plan section of the Operation Plan will be amended if expansion becomes necessary.

2. East Carolina Regional Landfill will follow these additional operational conditions during leachate recirculation:

   a. Records will be kept on a daily/weekly basis and will be maintained in the Facility Operating Record.

   b. No leachate will be recirculated when it is raining, or when the waste is too wet. A rain gauge will be installed on-site and monitored daily.

   c. No run-off or side seepage will be allowed. Should run-off or side seepage be noticed, leachate recirculation will be ceased. Any areas of seepage will be covered and compacted with 12" of soil and these remedial activities will be recorded and placed in the Facility Operating Record.

   d. Odors will be controlled. Should odors be present at levels determined undesirable by the facility Operator, leachate recirculation will cease.

   e. Leachate will be recirculated or irrigated during daylight hours only.

   f. The application system will be properly maintained and documented. All records dealing with the application system will be maintained in the Facility Operating Record.

   g. Plans of the subsurface leachate recirculation system will be kept in the Facility Operating Record. The operation of this system has previously been discussed. Maintenance of the system will include:

      i. Assure force main and valves do not leak. In the event any leaks are observed, the force main or valves will be repaired as necessary.

      ii. Any spills at the recirculation entry point(s) will immediately be cleaned up to prevent seepage of leachate outside the limits of waste. Clean up activities may include use of absorbent materials or soil cover. Any clean up activities will be recorded and placed in the Facility Operating Record.

      iii. Replace the subsurface recirculation lines if they become clogged or damaged.

      iv. Record any irregular maintenance requirements in the Facility Operating Record.

F. Random Inspection Program

The landfill is permitted as a municipal solid waste landfill and as such must not receive regulated hazardous or nuclear wastes. It is important that such wastes not enter the landfill because of the potential damage and liability these wastes could cause should they enter the environment.
Random inspection of vehicles will be conducted on a regular basis. The selection must be at a frequency of at least one vehicle per week. The frequency of random inspections may be increased at the General Manager's discretion. The personnel conducting the inspection will randomly select the load at the working face of the landfill and the inspection will be completed in a designated area near the working face. A random truck and time will be selected (e.g., the second load after 8:00 a.m.) on the day of inspections. In addition, any suspicious load shall be inspected.

Results of random inspections shall be recorded; report forms are included in the Appendix. One form shall be completed for each inspection. All reports and resulting correspondence are to be maintained in the East Carolina Regional Landfill facility operating record for the life of the landfill and during the post-closure period. The presence of any regulated hazardous, liquid or regulated PCB wastes or otherwise prohibited wastes identified during random inspections shall be reported to the Section. Inspections shall include truck identification, driver's name, source of material(s) if possible, or route and what, if any, prohibited material(s) were included. If none were observed, or only normal quantities of household hazardous waste, this too should be logged.

Inspections will be carried out and supervised by landfill staff trained to identify and manage hazardous and liquid waste. Landfill operators responsible for screening waste are trained in waste screening.

The following action plan required by Rule .1626(1)(f)(iv) addresses identification, removal, storage, and final disposition of wastes, and details the procedure for conducting random waste inspections.

- Stop the selected vehicle prior to the working face of the landfill.

- Notify the driver of the inspection.
- Direct the vehicle to the inspection area. The inspection area may be either a permanently designated location or a temporary location adjacent to the working face.

- If possible, perform a visual observation of the waste prior to unloading. If unauthorized waste is observed, or suspected, the vehicle shall be prohibited from unloading, and shall be directed out of the facility.

- If no unauthorized waste is observed or suspected from the visual observation, or if a visual observation is not possible, the vehicle shall discharge the load at the inspection area. The driver shall remain at the inspection area while the inspection is performed, unless a safety concern requires evacuation of the area. Equipment shall spread and turn the waste to facilitate a visual observation of the load contents. If no unauthorized

waste is identified, the waste shall be transferred to the working face for disposal.

- If unauthorized waste is identified in the load, and the unauthorized waste is not a regulated hazardous waste, a regulated medical waste, a regulated nuclear waste, or a waste which requires special handling, the waste shall be loaded back into the vehicle and removed from the facility.

- If acceptability of the waste can not be determined by visual observation, the waste can either be rejected and loaded back into the vehicle and removed from the facility, or samples of the waste can be taken to determine acceptability. Testing shall be selected based on the reason for the suspicion of unacceptability.

- Unauthorized wastes suspected of being a regulated hazardous waste, a regulated medical waste, or a regulated nuclear waste shall be managed in accordance with all applicable federal, state and local regulations. Republic Services of North Carolina will contact the proper authorities if any of the above prohibited wastes are received at the facility. This includes the Section, County Emergency Personnel and the local HAZMAT by calling 911. In addition, responsible parties will be notified of all rejected loads, if possible.

G. Waste Solidification

Refer to the Permit to Operate and the Waste Solidification Plan, which are both attached in the Appendix.

H. Storm Drainage

The landfill is divided into several areas with peripheral earthen diversion berms and stormwater conveyance channels. The diversion berms/channels allow for stormwater run-off to exit at the low side of each area. Exterior diversion channels via surface drainage will carry the surface stormwater flow to a sediment basin (stormwater management basin). The sediment basins are used for final trapping and settlement of sediment. The basins are generally designed in accordance with the NCDENR Stormwater Best Management Practices Manual. As an area's operations progress, the back surfaces should be sloped away from the active (working) face of the landfill to minimize the amount of stormwater flowing into the active cell and thus minimize the potential for leachate generation.

Care should always be used to assure that stormwater and leachate do not mix. In cases where they mix, the entire volume of mixed water must be treated as leachate. The operator may use temporary devices such as berms, stormwater conveyance channels, etc. to divert surface water away from the working face to avoid leachate generation.

I. Monitoring

Groundwater was tested before any waste filling began at the landfill site to establish "background" quality of the groundwaters. Upgradient and down gradient monitoring

wells were provided for initial groundwater quality testing and for routine groundwater quality monitoring during the life of active landfill operations and for monitoring groundwater quality during Post-Closure.

Monitoring wells, located downgradient from landfilling operations, will be used to monitor the quality of the groundwater. Depth, location and screening interval(s) of the groundwater monitoring wells will be determined during construction of the facility. Monitoring wells are located upgradient and downgradient of the landfill for detection of leachate contamination and movement. Routine monitoring results and records are to be placed in the operating record and submitted to the Section. Monitoring data, quality assurance / quality control data, statistical analyses, chain of custody records, and any other required information should be submitted to the Section within 60 days of the respective sampling event in accordance with the general conditions in the permit to operate.

1. Groundwater Monitoring

   A Water Quality Monitoring Plan, including information on the proposed groundwater monitoring system(s), sampling and analysis requirements, and detection monitoring requirements that fulfills the requirements of Rules .1633 through .1637 is included as Appendix E of the *Design Hydrogeologic Report, East Carolina Regional Landfill, Phase 5.* Groundwater monitoring shall continue throughout the Post-Closure period in accordance with the approved Plan.

2. Surface Water Monitoring

   A Surface Water Monitoring Plan has been designed to detect the effects of the facility on surface water in the area. This plan is included as part of the Water Quality Monitoring Plan as referenced above. Surface Water monitoring shall continue throughout the Post-Closure period in accordance with the approved Plan.

3. Leachate Monitoring

   Leachate Monitoring is part of the facility Operation Plan. Leachate management will continue at the facility during the Post-Closure period as long as leachate continues to be generated or until the owner or operator demonstrates that the leachate no longer poses a threat to human health and the environment.

4. Landfill Gas Monitoring

   Landfill Gas Monitoring is included as part of the facility Operation Plan. Landfill Gas Monitoring shall continue throughout the Post-Closure period in accordance with the approved Plan.

J. Final Grades

It is important that the final grades indicated on the Engineering Plans for the landfill are achieved as early as practicable throughout the filling operations so that stormwater run-off can be controlled. Stable compost and soils in conjunction with

an FML will comprise the final cover cap. If the final grades on the cap are too steep, then erosion problems may occur. If the final grades on the cap are too flat, then ponding may occur and the amount of stormwater penetrating the landfill could increase; thereby, increasing the potential for generating leachate. The operator should also realize that subsidence (or settlement) of the landfill surface will likely occur, which may affect drainage patterns. Thus Post-Closure maintenance of the landfill must include surveillance of drainage capability on the crown and slopes. As intermediate grades are achieved, the operator will construct side slope drainage berms with sideslope drain pipes at intervals of approximately 20 feet vertical. The drainage berms will be routed to side slope drain pipes. Maintaining adequate vegetative cover is critical.

K. Seeding

The specifications for seeding of disturbed areas must be followed to minimize erosion. Solid waste will have a completed elevation below final cover surface elevations on the top of the facility. This will allow the operator to install a soil infiltration layer (where required), an FML top liner, a drainage layer, an 18" thick root zone/protective media, and a 6" thick vegetative growth media. The 6" thick growth media shall be placed to final grade and the area seeded. Seeding specifications are included in the Technical Specifications.

L. Maintenance

Maintenance of the erosion control measures will be required throughout the life of the landfill and during the Post-Closure care period. After rain events and when slope conditions allow, it will be necessary for the landfill operator to check silt fences and sediment basins for silt buildup, or any type of damage or loss of functionality that may have occurred. The operator shall inspect the cover after rainfall and on a monthly basis during operations. Repairs must be made in a timely manner. Restoration of eroded areas on the surface is important to minimize the amount of water entering the landfill. Slopes providing drainage from the cap or crown surface must be maintained as well as vegetation to prevent cracks or fissures in the surface cap or crown due to erosion.

M. Fire Hazard

By keeping the landfill clean and the waste covered daily, the potential for fire can be lessened. If a fire occurs within the waste, it may be controlled by digging out the burning material, spreading and then recovering it with soil. Fire extinguishers should also be readily available. Arrangements should be made with local fire departments to establish procedures for extinguishing landfill fires. The Windsor Fire Department would serve the landfill site should there be a fire.

Incoming waste loads shall be observed by site operators for evidence of fire, such as flames, smoke, or the odor of burning material. Burning loads will be extinguished before dumping if possible. If there is evidence of fire in the landfill itself, the general manager will be notified immediately. If possible, the waste will be removed or segregated from other waste in the disposal area. The landfill general manager will evaluate the situation to determine whether the fire can be extinguished using fire extinguishers or equipment present at the site, or if off-site equipment will

be needed. If necessary, the local fire department (The Windsor Fire Department) will be called to render assistance in extinguishing the fire.

If there is a fire at the landfill, the operator must notify the Section and report if the fire has been controlled and what (if any) environmental damage may have occurred. The Section Rule .1626(5)(d) requires that any fires that may occur at the landfill be reported verbally to the Section within 24 hours and in writing within 15 days. A copy of the NCDENR Fire Occurrence Notification Form can be found in the Appendix. Fire extinguishers shall be located on each piece of equipment on site as required by Rule 1626(5)(c). Equipment operators shall be trained in the use of these extinguishers. Fire extinguishers will be used for small, localized fires. A stockpile of soil shall be maintained near the working face to be used for extinguishing small surface fires that may be too large to control with the fire extinguishers carried on the landfill equipment.

Emergency equipment will be called in the case of fires too large to be extinguished with fire extinguishers or soil as described above. Water contained in the sedimentation basins or inactive borrow areas can be used in an emergency to aid local firefighters in extinguishing large fires.

N. Open Burning

Open burning of solid waste including yard waste and brush is prohibited at the landfill. Infrequent burning of land clearing debris generated on-site including brush and/or stumps or debris from emergency clean-up operations would only be requested on an infrequent basis in conjunction with clearing or construction events. Any such burning shall be approved by the Section prior to commencing burning activities.

O. Fire Prevention

The landfill operator will be responsible for prohibiting acceptance of burning materials in the landfill. Cigarettes, lighters or any type of burning shall be prohibited in the active areas.

P. Odor Control

Odors are best controlled by daily cover, as well as by adequate compaction. Diligent and effective daily covering of the compacted wastes should prevent odors.

Q. Vector Control

Solid waste shall be covered daily with a minimum of six inches of soil or an approved alternative cover material to ensure that all food sources and potential habitats are buried.

R. Insect Control

Keeping the landfill clean and the solid waste covered daily, along with surveillance for and the elimination of any standing water in the waste filling areas, should prevent insect problems.

S. Litter Control

Use of movable screens or fences to capture windborne litter, followed by routine manual cleaning of the litter fence is strongly recommended. Fences should be cleaned on a regular basis. Frequent soil coverings during particularly windy days, and immediately covering and/or compacting and mixing light debris, should be performed to lessen the chances of blowing litter. During periods of high winds >25 mph, the landfill operator will collect blown trash, which primarily consists of plastic bags, in a reasonable time period following the event in a safe, orderly manner. Putresubles will be collected immediately.

T. Dust Control

Dust should be controlled by wetting down or applying calcium chloride, or polymer based solutions or adding stone to problem areas to mitigate dust problems. Calcuim chloride absorbs moisture from the air. Oil cannot be used for dust control.

U. Landfill Gas Management

The facility has a landfill gas collection and control system currently in place. This system is operated in accordance with the New Source Performance Standards (NSPS) and will be expanded in accordance with applicable regulations. Any expansion or addition to the existing landfill gas collection system will be submitted to the Solid Waste Section prior to implementation. In the future, the facility may choose to operate a gas to energy facility instead of burning the collected gas.

V. Access Roads

The access roads are to provide smooth hauling conditions from entrance of the site through the weigh station to the landfill cell. It will be the responsibility of the landfill operator to maintain the paved, temporary dirt, and graveled access roads within the site. Keeping haul routes open for safe and efficient traffic movement is a key factor in achieving smooth landfilling operations. As landfilling operations achieve higher elevations, the operator will need to adjust road locations in such a manner that temporary access roads are run up the slopes gradually in ramp fashion.

Access in the operations area may pose problems during wet weather. Therefore, it is suggested that temporary roads be constructed using stone and sloped to shed water away from the temporary access roads in the landfill. Shredded tires or other inert material may also be used for temporary road construction. Reuse of stone and replenishment of stone should be practiced when constructing new access roads.

W. Equipment

The equipment listed under Site Operation & Maintenance should be adequate for efficient operation of the landfill. Regular maintenance of the equipment will reduce repair problems, downtime and unnecessary costs.

X. Buildings and Structures

A Scale House is provided to house the scales and ticket operations. The Operations Office and Maintenance Building are also located on-site.

Y. Security

Fencing and natural barriers are provided to discourage vandalism, scavenging or trespassing from occurring when the landfill is not open. Screening by trees located along the property line should discourage 4-wheelers and other unauthorized vehicles from entering the site. Site boundaries should be checked regularly for evidence of unauthorized personnel and vehicle entry. The front gate should be locked when the landfill is closed to operations. Scavenging must be prohibited and enforced by the operator. Lines of communication should be established with the Sheriff's Department to perform routine surveillance of the facility.

Z. Signs

Posting of "No Trespassing" signs around the periphery of the landfill will help to discourage scavengers and unauthorized entry. A sign containing information required in Rule .1626(6)(e) (i.e., dumping procedures, hours, permit number, etc.) is posted at the landfill entrance. Traffic signs and markers are posted to promote orderly traffic patterns to and from the disposal area and to maintain efficient operating conditions. Signs are posted stating that no hazardous or liquid waste can be accepted.

AA. Phasing and Sequence of Fill

The East Carolina Regional Landfill will be developed in a series of phases, each designed to handle waste disposal for periods of five years. The fifth phase (Phase 5) consists of two cells (13 & 14).

VI. COMPLIANCE WITH THE SEDIMENTATION POLLUTION CONTROL ACT OF 1973

Erosion and sediment will be controlled on the site to prevent the discharge of pollutants into waters of the United States, including wetlands, that violates any requirements of the Clean Water Act. This includes, but is not limited to, the National Pollutant Discharge Elimination System (NPDES) requirements, Section 402. In addition, the site shall not cause the discharge of nonpoint sources of pollution to waters of the United States, including wetlands, that violates any requirement of an area-wide or State-wide water quality management plan that has been approved under Section 208 or 319 of the Clean Water Act, as amended. Surface water shall be diverted from the operational area and shall not be impounded over or in waste.

All vegetative and structural erosion and sediment control practices have been designed and shall be constructed and maintained according to the North Carolina Erosion and Sediment Control Planning and Design Manual. A copy of the *East Carolina Regional Landfill, Phase 5, Erosion and Sediment Control Plan* has been prepared incorporating adequate measures to control surface water run-off and run-on generated from the 24-hour, 25-year storm event and sent to the Land Quality Section for Approval.

VII. COMPLIANCE WITH DESIGN REQUIREMENTS

A. Compliance with Explosive Gas Requirements

The proposed landfill operations will involve various amounts of municipal solid wastes on a daily basis. Considering the large lateral slope (surface area) which will allow the produced gas to easily escape and disperse, conditions should not develop that would produce explosive concentrations. Routine monitoring for gas concentration should be performed. Methane gas monitoring probes are shown on the plans.

These monitoring probes shall be installed according to the detail shown on the Engineering Plans. The points shall be monitored on a quarterly basis during the operating life. Results shall be recorded and placed in the permanent operating record of the site. Any time the monitoring indicates the Lower Explosive Limit (LEL) is being approached, a plan shall be developed to assure that the LEL is not exceeded at the landfill boundary. Any on-site structures (eg. Scale House, etc) shall also be evaluated for methane concentrations on a quarterly basis. Should the levels of methane approach 25% of the LEL, immediate action shall be taken to see that 25% of the LEL is not exceeded. Temporary points may be bar punch holes.

B. Compliance With Surface Water Requirements

Sediment basins have been designed to prevent migration of sediment off-site. Preventing migration of contaminants from a landfill is a continuous concern. Design features and proper operational procedures should prevent surface waters from becoming contaminated. Four surface water monitoring points have been established to monitor water quality upstream and downstream to determine the effects from the landfill.

All inspections of surface water and sediment control structures shall be documented, and copies of these reports shall be placed in the operating record.

C. Compliance With Groundwater Requirements

Groundwater protection has been considered in the siting and design of the landfill. Groundwater monitoring wells will ascertain compliance with the groundwater quality standards. Groundwater monitoring well locations are indicated on the Environmental Monitoring Plan. Groundwater is monitored on a semi-annual basis during operations and will continue into post-closure.

D. Compliance With Permit Requirements

A copy of the landfill Engineering Plans and Permit To Operate from the North Carolina Division of Waste Management - Solid Waste Section shall be kept in the landfill office. The operator is responsible for being familiar with the permit requirements and ensuring compliance therewith.

VIII. SOIL MATERIAL TYPES AVAILABLE FOR BORROW

A combination of on-site borrow soils and imported soils may be required for the facility. Imported soils are being identified for use in projects at the appropriate times. It should be noted that the estimates of material types are based on both soil borings and backhoe pit excavations. Actual material types will be determined as the material is excavated.

IX. CLOSURE AND POST-CLOSURE PLANS

A. Purpose

The purpose of closure and post-closure plans is to meet the requirements of Rule .1617 and to provide the operator guidance on how the plans will be carried out. Site closure can occur at any time during the life of the facility and the closure plan should recognize that by evaluating a worst case scenario. A worst case scenario assumes that the facility is closed on the date when the effort to close would be the greatest. See Item B below. The post-closure activities are detailed in Item C below.

B. Closure Plan

Individual cells of the East Carolina Regional Landfill may be closed after the final deposition of waste within that landfill cell occurs.. Complete closure will occur once all landfill units reach final grade. Prior to closure of that unit, the operator will either cover portions of the cells with one foot of compacted earth cover (intermediate cover) or will install the final cap (final cover) on that section. This cap detail is labeled the final cover system.

1. Upon closure of any unit, or portion of a unit, the operator shall:

    a. Notify the Section in writing in order that a site inspection may be made to determine compliance with closure procedures.

2. An inspection shall be made by a representative of the Section and a written statement will be supplied to the operator concerning the closure of the site.

3. When a solid waste disposal site has been closed in accordance with the requirements of the Section, future necessary maintenance and water quality monitoring shall be the responsibility of the owner and/or the operator and will be specified in the closure letter.

4. Final Cover -- The capping system for final cover will include the following components:
    a. 18 inch thick cohesive soil layer with a permeability no greater than $1x10^{-5}$ cm/sec (this is not required on side slopes);
    b. 40 mil LLDPE or equivalent flexible membrane liner;
    c. Drainage layer above the 40 mil liner (i.e. geocomposite drainage media);
    d. Geotextile non-woven drainage fabric above the drainage layer;
    e. A minimum of 18 inch thick soil layer that will provide an erosion layer.

f. A 6" thick topsoil layer.

The 18 inch thick cohesive soil layer (with a permeability no greater than 1 x 10^{-5} cm/sec) will be placed on slopes less than 10% using a maximum of 8-inch thick loose lifts and compacted to at least 90% of Standard Proctor maximum dry density at a moisture content no more than 2% below or 5% above optimum moisture content for that soil.

The total airspace of Phases 1 through 4 (Cells 3-12) has been estimated as 12,500,000 cubic yards. An estimate of the total airspace in Phase 5 is 3,854,000 cubic yards. After allowing for daily/intermediate cover, cap and soil protective cover, a total of 3,425,000 cubic yards (2,400,000 tons) of waste will have been disposed of in the Phase 5 portion of the facility. Supporting calculations are included in the Narrative Appendix. The calculation is based on the volume between proposed top of protective cover grades and the base of the landfill cap, and assumptions regarding the density of waste and amount of cover soil in the fill.

The permitted East Carolina Regional Landfill encompasses approximately 662 acres, 150 acres of which are approved for lined capacity by the Solid Waste Section. The approved lined capacity acreage has been subdivided into seven (7) five-year Phases containing 24,200,000 cubic yards of waste. The facility is currently operating in Phase 4, which includes cells 11 and 12. Construction of cell 11 was completed in early 2006 and a Permit To Operate was issued by the Solid Waste Section on June 15, 2006.

The facility will be closed in accordance with the requirements of Rule .1627 of the North Carolina Solid Waste Management Rules (15A NCAC 13 B). The landfill cap shall be placed over a completed cell area within 180 days of receipt of final waste in that cell, weather permitting. Construction of the cap shall conform to the final grades shown on the plans. An approximate 4.5 acre area of the facility has already been capped. The remainder of the facility may be capped in one construction event or in phases.

Prior to beginning closure of a completed cell or an entire unit, the operator shall notify the Section of the intent to close the area.

Following closure of each unit (i.e.: An area that is discreet from other waste units), or portions of units, the operator shall notify the Section that a certification, signed by a professional engineer verifying that closure has been completed in accordance with the closure plan, and applicable solid waste regulations and laws as required by Rule .1627(c)(7) has been placed in the operating record.

Following closure of all the MSWLF units, the operator shall record a notation on the deed to the landfill facility property, or some other instrument that is normally examined during a title search, and notify the Section that the notation has been recorded and a copy has been placed in the operating record.

The notation on the deed shall in perpetuity notify any potential purchaser of the property that:

1. The land has been used as a landfill facility; and

2. Its use is restricted under the closure plan approved by the Section.

Once closure is complete, a survey plat will be prepared by a registered land surveyor showing the locations and dimensions of the landfill disposal areas, the locations of groundwater monitoring wells and methane gas monitoring probes, and the restrictions on future disturbance of the site.

The costs for closure of the facility are updated annually for this facility. These updated costs are submitted to the Section annually for review and approval under separate cover.

C. Post-Closure Activities

The landfill operator will be responsible for 30 years of post-closure care of the East Carolina Regional Landfill, after final closure of the landfill facility. These post-closure activities insure the environmental integrity of the facility. The planned use for this landfill facility after closure will be as a "greenspace" consisting of vegetated areas and buffers. The facility post-closure will be carried out in a manner that promotes non-destructive use by wildlife. (eg: landfill surface will be grassed, etc.)

The operator shall perform the following activities during the post-closure period:

1. Maintain the integrity and effectiveness of the cap system, including making repairs to the cover as necessary to correct the effects of settlement, subsidence, erosion, or other events, and preventing run-on and run-off from eroding or otherwise damaging the cap system;

2. Maintain and operate the leachate collection system in accordance with the requirements in Rules .1624 and .1626. (The Section may allow the owner or operator to stop managing leachate if the owner or operator demonstrates that leachate no longer poses a threat to human health and the environment);

3. Monitor the groundwater and surface water in accordance with the requirements of Rules .1631 through .1637, and maintaining the groundwater monitoring system, if applicable; and monitoring the surface water in accordance with the requirements of Rule .0602; and

4. Maintain and operate the gas monitoring system in accordance with the requirements of Rule .1626 of this Section.

Following completion of the post-closure period for each MSWLF unit, the operator shall notify the Section that a certification, signed by a registered professional engineer, verifying that post-closure care has been completed in accordance with the post-closure plan, has been placed in the operating record.

The post-closure monitoring required above shall be performed at the following frequency:

Monitoring Activity	Monitoring Interval
Cap System Inspection, Stormwater Control & Corrective Action	Monthly until vegetation is established, then quarterly.
Leachate Quality Monitoring	Semi-Annually
Groundwater & Surface Water Monitoring	Semi-Annually
Gas Monitoring	Quarterly

The person responsible for the facility during the post-closure care period is:

General Manager
East Carolina Regional Landfill
1922 Republican Road
Aulander, NC 27805

The planned end use of this site will not damage the various landfill closure systems. In particular, no activity is planned, nor will any activity be allowed, which disturbs the integrity of the cap system, base liner system, or any other components of the containment system, or the function of the monitoring systems unless necessary to comply with the requirements of Section .1629 of the rules. Any disturbance must be approved by the Section. Only those disturbances which will not increase the potential threat to human health or the environment, as fully demonstrated by the Operator, will be approved.

The cost of the post-closure activities is updated annually for this facility. These updated costs are submitted to the Section annually for review and approval under separate cover.

X. OTHER ISSUES

A. Borrow Areas

Republic Services of North Carolina, LLC owns or leases nearby tracts which are available for soil borrow.

B. Engineering Plan

1. Analytical Methods Used to Evaluate the Design:

   a. Storm Drainage - see **Section VI – E&S Design Calculations**, for narrative of all calculations and analytical methods used to size piping, structures, sediment basins, downdrains, side slope berms and stormwater conveyance channels.

b. Leachate Production and Collection - see **Section VII – Leachate Design Calculations** for discussion of all calculations and analytical methods used to perform HELP models, size all leachate piping, leachate pumping stations and leachate storage tanks.

2. Definition of Critical Condition Evaluated and Assumptions mode - slope stability analysis and settlement analysis are included in reports by geotechnical engineers.

3. Technical References

- North Carolina Erosion and Sediment Control Planning and Design Manual.
- Driscopipe System Design Manual
- How To Meet Requirements for Hazardous Waste Landfill Design, Construction and Closure by U.S. EPA
- Soil Conservation Service Drainage Design Charts
- Bureau of Public Roads Drainage Design Charts
- Federal Highway Administration Drainage Design Charts
- Computer Program
    - Hydrographs Hydraflow 2004 – SCS Method
    - Flowmaster - open channel and pipe
    - Hydraulic Evaluation of Landfill Performance

4. Completion of Any Applicable Location Restriction Demonstrations

All applicable location restriction demonstrations were made in either the Site Application or the Design Hydrogeologic Report.

C. Storm Debris Storage

Areas of the site may be utilized for temporary storm debris storage as approved by the Section.

XI. CLOSURE OF LEACHATE STORAGE FACILITIES

Upon completion of the post-closure period, the leachate storage facilities shall be removed from the landfill site. This closure must be complete within 180 days of cessation of operations of the leachate collection system.

The leachate storage facility closure shall include removal of:

A. The steel leachate tanks with appurtances
B. The concrete tank foundations
C. The pump connections
D. The secondary containment structures
E. The floor to the secondary containment structures
F. Any soil that has been contacted by the leachate

Any components not destined for reuse shall be properly handled and disposed according to Federal and State requirements. Any above-ground or below-ground piping that remains

shall be securely capped and tagged with the date of capping. The site shall be graded and grassed upon completion of all closure activities noted above.

XII. PETROLEUM CONTAMINATED SOIL ALTERNATE DAILY COVER

Petroleum Contaminated Soil (PCS) is a beneficial reuse of soil with relatively low levels of petroleum in the soil. The approved maximum petroleum contaminant level of soil will be 3,000 parts per million (ppm). Forms for use during acceptance of PCS soils are attached in the Appendix. These forms can be used to record the amount of PCS utilized as Alternative Daily Cover (ADC).

Conditions for ADC usage are listed below. These conditions are to be strictly followed.

1. Soils contaminated to a maximum level of 3,000 ppm of Total Petroleum Hydrocarbons (TPH) or less are approved for use as ADC. Only soil contaminated with the following may be considered for ADC.

   - Class I - Low boiling point fuels such as gasoline, aviation fuel, and gasohol.
   - Class II - Medium / high boiling point fuels such as jet fuels, kerosene, diesel fuel, varsol, mineral spirits, naptha, fuel oils no. 1 through no. 6, and motor oils (new and used).

   Soils contaminated with the following are not acceptable for use as ADC.

   - Chlorinated solvents, organic acids, or hazardous waste.
   - Tars and asphalt.

2. The ADC will be used in the same manner as soil daily cover. The ADC will be placed six-inches thick over the daily working face of the landfill.

3. The PCS utilization rate shall not exceed ten percent (10%) of the average monthly permitted disposal rate of the landfill.

4. The facility shall calculate the values corresponding to 10% of the average monthly volume of waste they are permitted to receive and the average amount of daily cover that is required under normal operating conditions (i.e., 6" of soil over the working face/daily). The amount of PCS that may be received by the facility is limited by the lesser of those two numbers.

5. PCS shall be stockpiled in the cell away from daily traffic and operations in such a way that run-off shall not leave the limits of the lined cell area. These soils shall be covered with a tarp or similar material for storage, or maintained at a moisture level sufficient to prevent blowing dust. Berms shall be constructed around the stockpile to direct run-off to the leachate collection system if the run-off is not already directed there. ADC shall be stored over the lined areas of the site so run-off from the stockpile will be contained within the leachate collection area for the cells.

6. PCS may be stored for a maximum of 45 days.

7. Use of ADC shall be allowed only for volumes of material placed in a manner that does not exceed the regulatory requirement of six inches of daily cover. PCS is prohibited from disposal, so excess PCS should not be accepted at the facility.

8. The facility shall maintain records in the facility operating record indicating how much waste was received, how much PCS was received, and how much PCS was utilized for ADC, on a monthly basis.

9. PCS for use as Alternative Daily Cover must be generated in the facility's permitted service area.

10. Samples of leachate shall be collected on a semi-annual basis and analyzed for TPH (both diesel and gasoline fractions) and BTEX. This sampling shall be performed in addition to the leachate sampling requirements from NCDENR. One sample will be collected semi-annually from the leachate storage tanks.

XIII. POSI-SHELL COVER SYSTEM ALTERNATE DAILY COVER

East Carolina Regional Landfill has successfully demonstrated the use of the Posi-Shell Cover System (Posi-Shell) as an alternative daily cover material. When Posi-Shell is used, it shall be placed in accordance with the manufacturer's recommendations as stated in the approved permit. Full documentation of the use of Posi-Shell was provided to the Solid Waste Section for review prior to approval.

A. Material Description

Posi-Shell is a non-flammable, cement mortar coating that is spray applied to the working face using hydro-seeder type or similar spray equipment. The cementitious binder material and reinforcement fiber material are mixed with a liquid component immediately prior to application in the spray equipment. After application, the solution hardens to a non-flammable shell coating. Posi-Shell material information has been included in the Appendix of this Operation Plan.

B. Requirements for Alternative Daily Cover

An alternative daily cover must control disease vectors, fires, odors, blowing litter, and scavenging without presenting a threat to human health and the environment. Posi-Shell will accomplish these requirements as follows:

- Posi-Shell will be spray applied to form a hardened, non-flammable shell over waste daily. The hardened shell will control disease vectors, odors, blowing litter, scavenging, and fire in a manner similar to soil and consistent with the Rules.

- A complete soil intermediate cover will be applied at the completion of each lift. This soil cover will help to control disease vectors, odors, blowing litter, scavenging, and fire. The "soil segregated lifts" will provide a thicker barrier to confine and restrain any spread of fire. Final covers required by this plan will also help control spread of fire. In addition, stockpiled soil will be available for fighting fires. Taken together, these measures plus on-going quality site management will assure fire control is adequate.

- Use of Posi-Shell Alternative Daily Cover is not expected to cause excess dust. Normal site operations will be utilized to control dust.

C. Procedures

Posi-Shell shall not be used during rainfall events or inclement weather. Posi-Shell will be applied using hydro-seed or similar spray equipment. Application procedures will strictly follow the recommendations provided by the manufacturer.

When Posi-Shell is applied as daily cover, leachate may be utilized as the liquid component of the Posi-Shell mixture. In the event Posi-Shell is utilized outside of the lined landfill area for erosion control applications, leachate may not be used. Spray equipment will be thoroughly cleaned when leachate has been utilized prior to any applications outside of the lined landfill area.

D. Trial Period

Posi-Shell was used initially for a 3 month trial period. Documentation demonstrating the effectiveness of Posi-Shell was submitted to the Section and approved.

E. Final Documentation

The landfill Manager and/or Engineer observed the application and effectiveness of Posi-Shell during the trial period. Use of Posi-Shell was fully documented with photos and records of use. This information was submitted to the Section at the completion of the trial period. No further documentation for the use of Posi-Shell is required at this time.

V

TRAINING PROGRAM OUTLINE

TRAINING PROGRAM OUTLINE

CQA Training

This training will be provided by the Project Engineer and will include the CQA Technician and the Contractors working on the liner and Protective Cover.

Outline of Items to be Covered:

1. Discussion of the 12 inch thick protective cover and how this is to be installed, including the cushion geotextile fabric over the FML.
2. Discussion of how the CQA technicians will observe this work and demonstrate with photographs how the system was properly installed.
3. Discussion of spreading the protective cover including the need for a second technician when more than one dozer or loader is operating in the cell spreading protective cover.
4. Discussion of the gravel leachate collection column and the transition media, if required. This will also cover the sacrificial separation geotextile over the gravel leachate collection column.
5. Discussion of what the final CQA report will include.

Fluff Lift Installation Training

This training will be performed by the Project Engineer and will include all site personnel who will work in the cell during the installation of the fluff lift of waste.

1. Discussion of the 12 inch thick protective cover system and the 24 inch thick leachate collection system.
2. Discussion of the removal of the sacrificial separation geotextile over the gravel leachate protection column.
3. Discussion of photographic record required.
4. Discussion of pushing the waste into the cell so as not to damage the protective cover or leachate collection system.
5. Discussion of tipper or truck dumping in the initial lift.
6. Discussion of reporting anything out of the ordinary or anything that could affect the liner or protective cover system.

VI

DETAILS

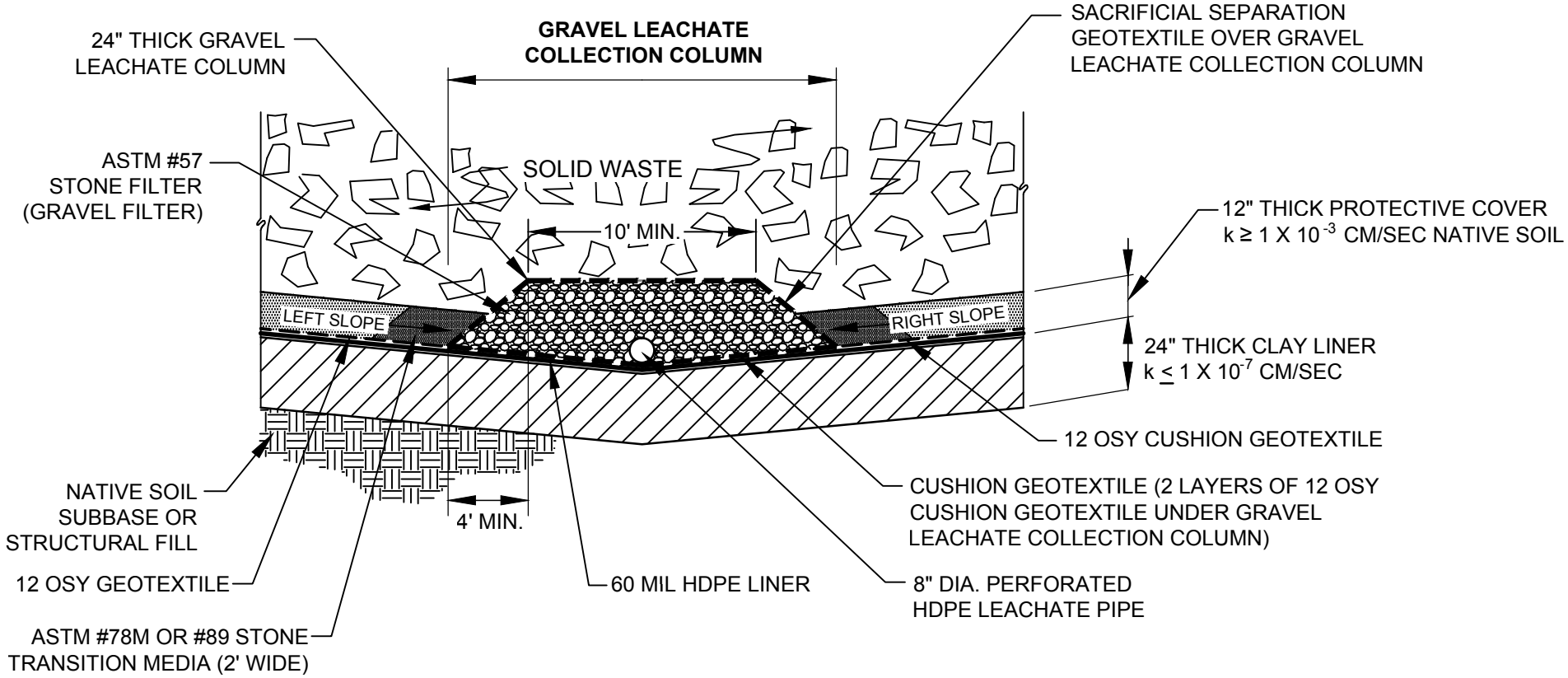

NOTES:

1. PERFORATED 4" DIA. SUPPLEMENTAL LEACHATE COLLECTION PIPES SHALL BE INSTALLED IN THE PLANE WITH THE GEOTEXTILE GEOCOMPOSITE ON 50' CENTERS PERPENDICULAR TO THE 8" PERFORATED LEACHATE COLLECTION PIPE IN THE CENTERLINE OF THE CELL. THESE 4" DIA. SUPPLEMENTAL LEACHATE COLLECTION PIPES SHALL BE COVERED WITH 24" THICK PROTECTIVE COVER.
2. 60 MIL HDPE LINER COMPONENT SHALL BE COVERED WITH A MIN. 12 OZ PER SQ. YARD GEOTEXTILE FABRIC.

MINIMUM SLOPE		
CELL NO.	LEFT	RIGHT
11	2.00%	2.30%
12S	2.00%	2.60%
12N	2.00%	2.10%

EAST CAROLINA BOTTOM LINER SYSTEM "A"

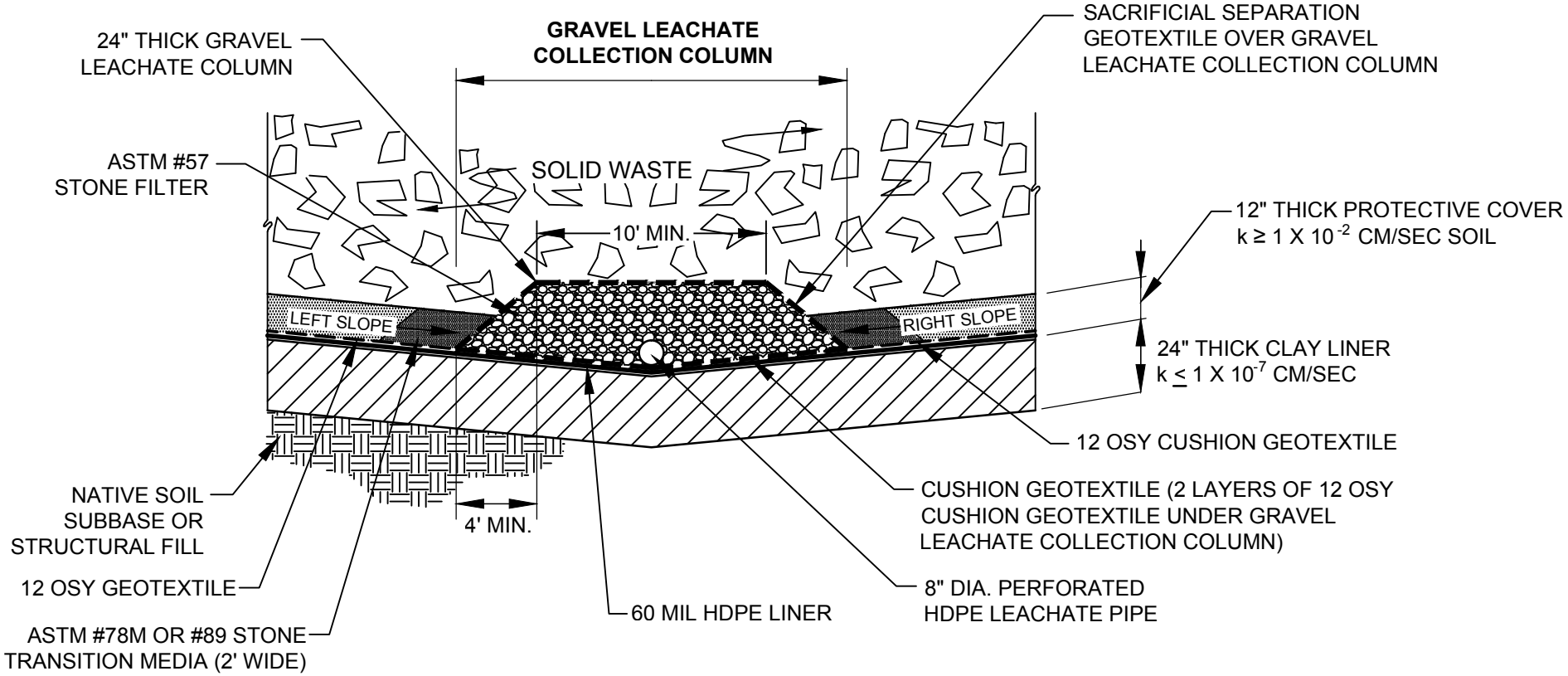

NOTE:
60 MIL HDPE LINER COMPONENT SHALL BE COVERED WITH A MIN 12 OZ. PER SQ. YARD GEOTEXTILE FABRIC, EXCEPT ON SIDE SLOPES.

MINIMUM SLOPE		
CELL NO.	LEFT	RIGHT
11	2.00%	2.30%
12S	2.00%	2.60%
12N	2.00%	2.10%

EAST CAROLINA BOTTOM LINER SYSTEM "B"

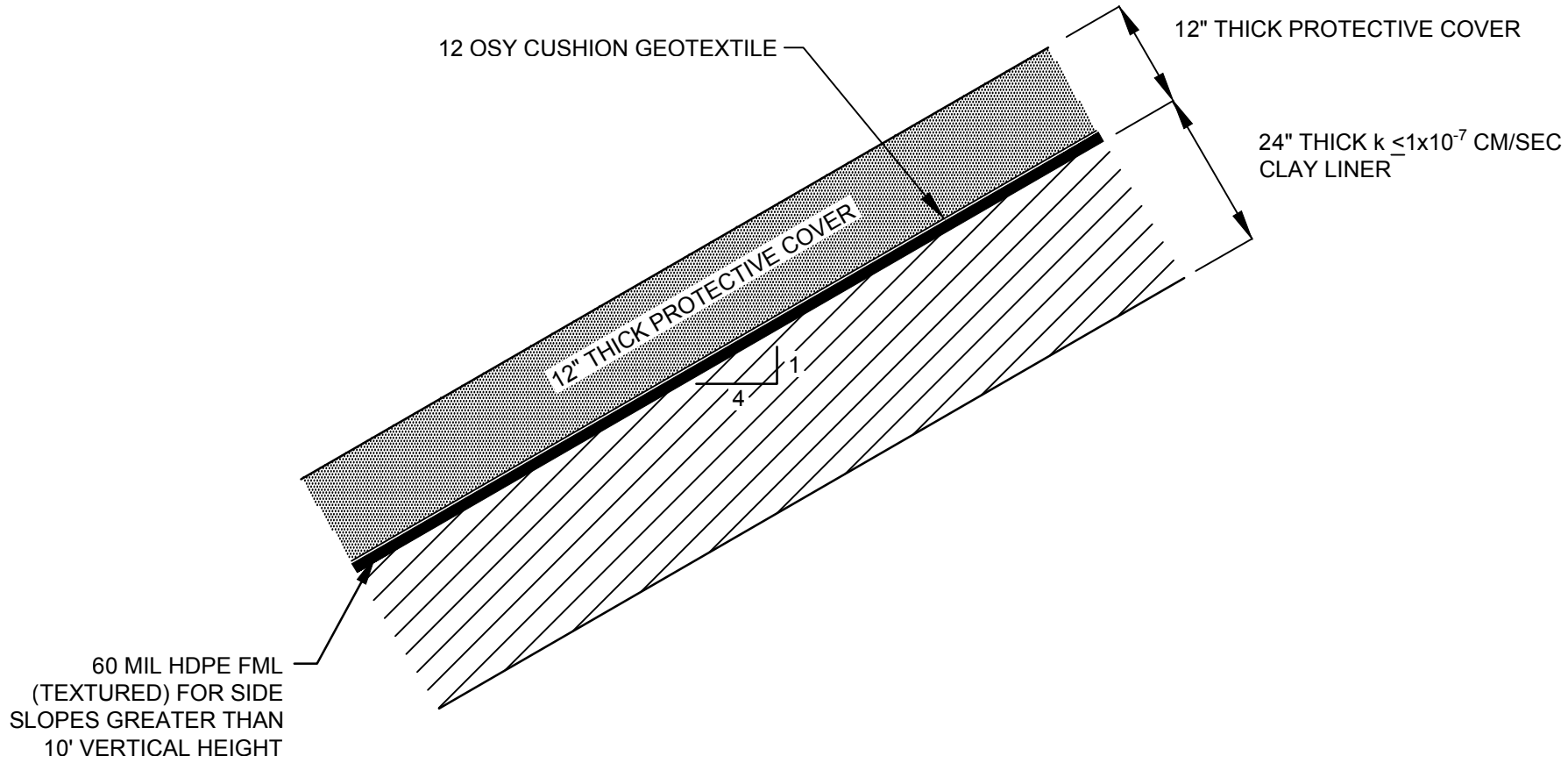

EAST CAROLINA SIDE SLOPE LINER SYSTEM "A" OR "B"