SMITH+GARDNER
ENGINEERS

ADDRESS
14 N. Boylan Avenue, Raleigh NC 27603

TEL
919.828.0577

WEB
www.smithgardnerinc.com

Permit No.	Date	Document ID No.
98-01	**July 17, 2012**	**16903**

Received via a mail
Date: **July 16, 2012**
Solid Waste Section
Raleigh Central Office

July 16, 2012

Mr. Ming-Tai Chao
Environmental Engineer II
NC DENR – Solid Waste Section
1646 Mail Service Center Road
Raleigh, North Carolina 27699-1646

Re: Construction Record – 2011/2012 Dewatering Maintenance Project
Wilson County Municipal Solid Waste Landfill (MSWLF)
NC Solid Permit No. 98-01

Dear Ming:

On Behalf of MP Wilson, LLC, Smith Gardner, Inc. (S+G) would like to submit documentation of the construction activities performed in the dewatering maintenance activities performed to optimize the existing gas collection system as originally proposed by Ms. Amy Ratliff, P.E. of Methane Power in September 2011[1] and subsequently approved by the NCDENR[2]. The project consisted of the following activities:

- Installing two (2) pneumatic pumps in existing gas wells GW-8 and GW-9;
- Installing two (2) pneumatic pumps in existing condensate sumps CS-1 and CS-2;
- Installing a two (2) inch dual-contained condensate force-main, a one (1) inch compressed air supply line and related appurtenances;
- Connecting the pumps, sumps, and piping to a new five (5) horsepower, 14 standard cubic feet per minute (scfm) compressor to remove excessive liquid inside the wells; and
- Erecting an approximate 9,500 gallon above ground storage tank (AST) with built-in secondary containment at the flare station to store the extracted condensate.

In accordance with the plan, S+G visited the site on March 21, 2012 and verified the following:

Air Supply and Condensate Forcemain Piping

All of the trenching and piping installation was performed by Chandler Construction in late 2011 and was completed in May 2012 which included some additional recommendations by S+G. The air supply and force-main were installed both in areas outside the waste limits and inside. The piping located inside the waste limit was placed within the top 18 inches of

[1] CH4Power letter from Amy Ratliff. "Dewatering Maintenance Operation Plan." Dated September 6, 2011.
[2] NCDENR – DWM letter from Ming-Tai Chao. "Authorization for Installing and Operating a Dewatering Maintenance Project." Dated September 9, 2011.

vegetative cover soils, above 24 inches of clay. During the site visit, S+G walked the alignment of the new piping, witnessing current progress of revegetation which appeared almost fully repaired. Shovel test pitting was performed in selected locations to verify location and depth. In all locations, the piping was placed no deeper than 12 inches and appeared to remain above the clay layer. Additionally, S+G verified pressure testing records provided by Methane Power in accordance with ASTM F-1417. A copy of the pressure test results is included as **Attachment A.**

Condensate Sumps

Existing condensate sumps CS-1 and CS-2 were modified to include new Viridian VP-4 pneumatic pumps. The 12 inch flange on CS-1 was modified to receive the new pump by extrusion welding a 6 inch DR 17 piece of pipe into the 12 inch adaptor. Modification of CS-2 included removal of the existing 24 inch manway cover, fluid level indicator, existing 12 inch flange, and vacuum truck connection and piping. A new 24 inch blind HDPE flange was installed.

Following the completion of the system, Bartlett Engineering and Surveying established new control points and then the site as-built survey was calibrated by Bob Gettys using Trimble GPS to mark all locations in a drawing prepared by Methane Power. The as-built survey shows all installations, including air lines, condensate lines, and sump modifications as shown in the updated record drawing (provided as **Attachment B)**.

Temporary AST for Condensate Storage

A nominal 9,500 gallon AST was erected at the existing flare station on a concrete foundation prepared by Chandler Construction. The tank was provided by Protectoplas Company of Streetsboro, Ohio and was constructed upon a rebar-reinforced concrete pad. The tank is equipped with a secondary containment system and will be used as a temporary holding tank for condensate removed from gas wells prior to pump and haul to the City of Wilson. Condensate from the tank is transported to the City of Wilson Water Reclamation Facility according to the Special Use Sewer Discharge permit #2011-003 (Doc ID 13929).

S+G was not present during the construction of the tank. In the original plan by Ms. Ratliff, specific foundation plans were not included. Therefore, S+G requested a post construction analysis of the tank foundation by Ross Linden Engineers to determine structural stability of the foundation. Ross Linden Engineers determined that the existing tank foundation was adequate to support the expected loads. A copy of this analysis, as well as the manufacturer's specifications for the tank, is included as **Attachment C**.

Following the site visit, S+G recommended that all exposed piping be insulated as all piping was Schedule 80 PVC and susceptible to freezing during the winter. Methane Power agreed with the request. Crowder Construction completed this effort and pictures are included in **Attachment D**.

In addition, a high level shut-off relay was installed on the AST. The modified schematic and information about the controls for the relay are included as **Attachment E**.

Site Restoration

The final cover system of the Wilson County MSWLF was restored according to the approved Closure Plan. S+G personnel verified through site inspection that the trenching remained in the vegetative soil layer.

Summary

The Construction methods, locations, and details of the dewatering maintenance project components are in general agreement with the approved plan. **Attachment D** includes record photographs of the project.

Should you have any questions or require clarification, please contact us at (919) 828-0577 or by email below.

Cordially,

Smith + Gardner, Inc.

NORTH CAROLINA PROFESSIONAL SEAL 023002 ENGINEER STACEY A. SMITH 7-16-12

Lori Ann Phillips, P.E.
Project Engineer, ext. 140
lori@smithgardnerinc.com

Stacey A. Smith, P.E.
Project Manager, x 127
stacey@smithgardnerinc.com

LAP/SAS

Att.

Cc: Mr. Ryan Hennessey, Methane Power
Mr. Simon Haworth, Methane Power
Andy Davis, Wilson County Solid Waste Department
Gary Ahlberg, P.E., Blackrock Engineers
File

Attachment A

Pressure Test Results

CH4POWER smart energy

Methane Power, LLC
121 Edinburhg, South Drive, Suite 207
Cary, NC 27511

SHEET:	1 of 1
JOB #:	Chandler 10-95
DATE:	10/14/11
BY:	Bob Gettys
CHKD BY:	Byron Hackney (RSG)

Wilson County Landfill Phase 1
Hydrostatic Pressure Test Documentation (ASTM F 2164)

Test Procedure: ASTM F 2164

Date: 10/14/2011

Contractor: Chandler Construction

Test Observed by: Bob Gettys

Description: Primary - 4 x 2 Duel Contained force main. This test was to verify the integrity of the primary piping. Started equalization period (4hrs) at 71psi. Started 1hr test period at 61psi as noted below.

Calculations:

Pressure Correction: $$Pc = \frac{(Pt + 14.7)(Tt + 273)}{(Ti + 273)}$$

% Pressure Drop: $$\frac{Pc - Pi}{Pc} \times 100\%$$

where:

T_t = Temperature in ^oC at time "t"
T_i = Initial temperature in ^oC
P_t = Test pressure in psig at time "t"
P_i = Initial test pressure in psig =
P_c = Pressure in psig corrected for temperature (Tt) at time "t"
t = Time in minutes from start of the test

Pressure Test Results (See Notes 1 and 2):

Time (min)	**Tt** Temp. (^oC)	**Pt** Guage Pressure (psig)	**Pc** Corrected Pressure (psi)	**% Pressure Drop**
0	23	61.0	67.4	0.0%
10	23	61.0	67.4	0.0%
20	23	61.0	67.4	0.0%
30	23	61.0	67.4	0.0%
40	23	61.0	67.4	0.0%
50	23	61.0	67.4	0.0%
60	23	61.0	67.4	0.0%

Notes:

1. Per ASTM F 2164, pressurize pipe for 4 hours, reduce pressure by 10 psi, and then begin the 1 hour test period.
2. Per ASTM F 2164, a passing test is indicated by no visual leakage and the test pressure remaining steady (within 5% of the pressure at the start of the test) for the 1 hour test period.

Test Result (Pass/Fail): PASS

CH4POWER smart energy

Methane Power, LLC
121 Edinburhg, South Drive, Suite 207
Cary, NC 27511

SHEET:	1 of 1
JOB #:	Chandler 10-95
DATE:	10/14/11
BY:	Bob Gettys
CHKD BY:	Byron Hackney

ABC Landfill - Phase 1
Hydrostatic Pressure Test Documentation (ASTM F 2164)

Test Procedure: ASTM F 2164

Date: 10/14/2011

Contractor: Chandler Construction

Test Observed by: Bob Gettys

Description: Secondary - 4 x 2 Duel Contained force main. This test was to verify the integrity of the secondary piping. Started equalization period (4hrs) at 70psi. Started 1hr test period at 60psi as noted below.

Calculations:

Pressure Correction: $$Pc = \frac{(Pt + 14.7)(Tt + 273)}{(Ti + 273)}$$

% Pressure Drop: $$\frac{Pc - Pi}{Pc} \times 100\%$$

where:

T_t = Temperature in ^oC at time "t"
T_i = Initial temperature in ^oC
P_t = Test pressure in psig at time "t"
P_i = Initial test pressure in psig =
P_c = Pressure in psig corrected for temperature (Tt) at time "t"
t = Time in minutes from start of the test

Pressure Test Results (See Notes 1 and 2):

Time (min)	**Tt** Temp. (^oC)	**Pt** Guage Pressure (psig)	**Pc** Corrected Pressure (psi)	**% Pressure Drop**
0	23	60.0	66.3	0.0%
10	23	60.0	66.3	0.0%
20	23	60.0	66.3	0.0%
30	23	60.0	66.3	0.0%
40	23	60.0	66.3	0.0%
50	23	60.0	66.3	0.0%
60	23	60.0	66.3	0.0%

Notes:

1. Per ASTM F 2164, pressurize pipe for 4 hours, reduce pressure by 10 psi, and then begin the 1 hour test period.
2. Per ASTM F 2164, a passing test is indicated by no visual leakage and the test pressure remaining steady (within 5% of the pressure at the start of the test) for the 1 hour test period.

Test Result (Pass/Fail): PASS

Attachment B

As-Built Survey/Record Drawing

Details Index

Pump Stop Details	1/4
CS-1 Sump Details (Existing)	2/4
CS-2 Sump Details (Existing)	3/4
VP-4 Pump Details	1/5
CS-1 Sump Modification Details	2/5
CS-2 Sump Modifications Details	3/5
Trench Details	4/5

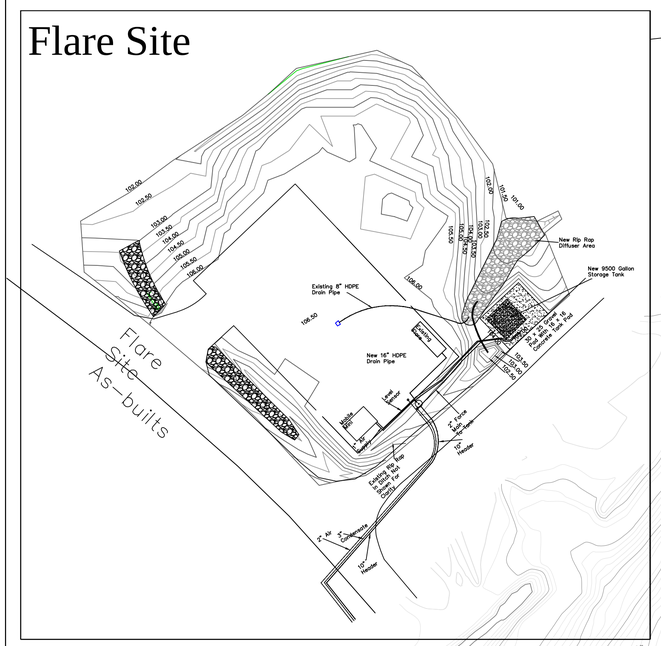

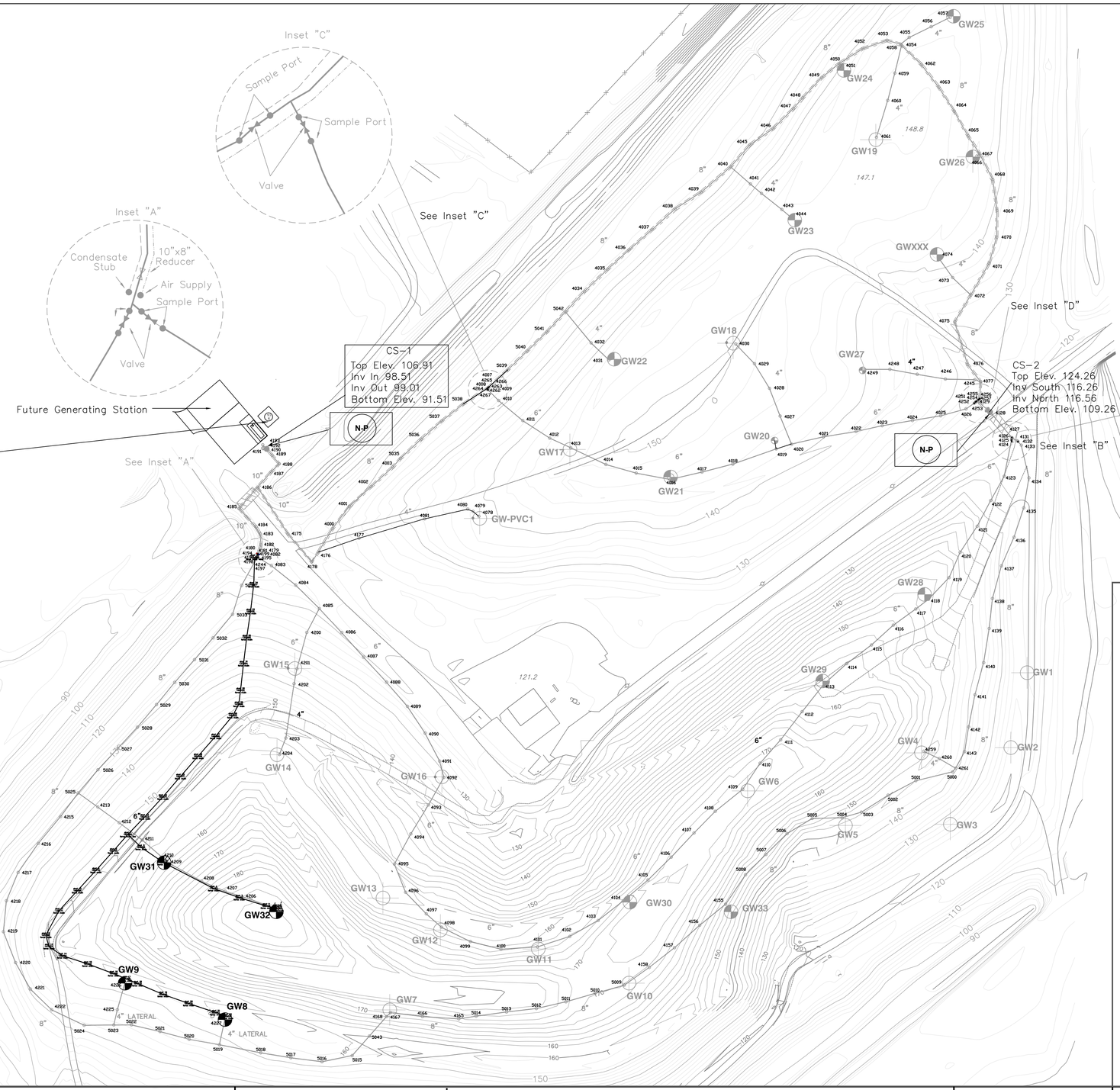

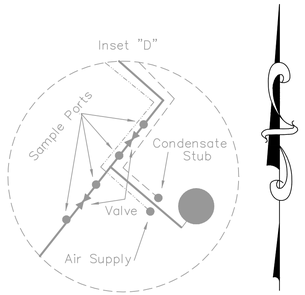

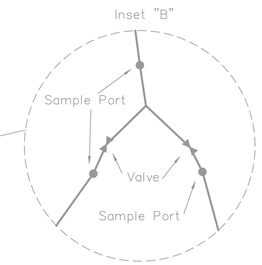

GRAPHIC SCALE

0' 100' 200' 300'

1" = 100'

LEGEND

- EXISTING CONTOUR
- LFG HEADER/LATERAL
- CONDENSATE FORCEMAIN
- AIR SUPPLY
- ROAD CROSSING
- STUBS OF AIR/CONDENSATE LINE
- LFG ISOLATION VALVE
- NEW GAS WELL
- EXISTING GAS WELL
- SUMP
- SAMPLE PORT
- **New 2" Condensate Force Main**
- **New 1" Air Supply Line**
- **New Well Pump Location**
- N-P **Sump With New Pump**
- 9.5 K **Future 9,500 Gallon Condensate Storage Tank**

DRAWN BY: RG	*Project Owner:*	*SEAL:*	*Project Title:*	DRAWING TITLE:	**AS-BUILT SYSTEM DEWATERING MODIFICATIONS:**
SURVEY BY:	**MP WILSON, LLC**		**WILSON COUNTY LANDFILL**	SITE OWNER:	**WILSON COUNTY LANDFILL, NC**
CHECKED BY: AR	**121 EDINBURHG SOUTH DRIVE, SUITE 207**		**GAS COLLECTION SYSTEM**	SCALE:	**1" = 100'**
FILE NAME:	**CARY, NORTH CAROLINA 27511**		**DEWATERING MODIFICATIONS**	DATE:	**February 2012**
CUCWILNC-92011	(PH) 919-297-7206 (FAX) 919-297-7211			SHEET NO.	**3 OF 6**

Attachment C

Storage Tank Foundation Analysis and Tank Specifications

ROSS LINDEN

ENGINEERS PC

Project No. C120306

22 March 2012

Stacey A. Smith, PE
Richardson Smith Gardner & Associates
14 N. Boylan Avenue
Raleigh, NC 27603

Re: Wilson County Landfill
Analysis of existing tank foundation

Dear Mr. Smith –

Per your request, we have evaluated the existing tank foundation at the Wilson County Landfill site for structural adequacy based on the information you have provided. It is our understanding that a 9500 gallon HDPE tank has been installed on site. The tank has been provided by Protectoplas Company of Streetsboro, Ohio. The design of the tank and the anchorage of the tank to the concrete foundation have been provided by the manufacturer.

Foundation dimensions and reinforcing information for the tank foundation has been provided by the contractor. The "Tank Pad Details" drawings shows that the foundation consists of a 12" thick concrete slab reinforced with (2) layers of #5 bars at 12" spacing in each direction. The drawing shows the tank pad to be 16'-0" x 16'-0". The foundation is currently in place, and we are therefore unable to verify that the reinforcement has been placed in the concrete pad in accordance with the provided drawing. Our analysis of the tank foundation has been made under the assumption that the existing foundation was built per the information provided.

Based on a maximum wind speed of 100 mph, and assuming an empty tank, the maximum overturning moment due to wind loads is approximately 18.4 k-ft, in accordance with ASCE 7 and the NC Building Code. Based on the dimensions of the tank pad provided by the contractor, the maximum resisting moment of the foundation is approximately 307.2 k-ft, resulting in a safety factor of 16. Assuming a full tank, the maximum weight of the tank is approximately 85,000 lbs. The maximum bearing pressure beneath the foundation is approximately 335 psf. Based on my professional judgment, the existing tank foundation (based on the information provided for our review) is adequate to support the expected loads for the existing tank on site.

We appreciate the opportunity to provide this service. Please feel free to contact me if you have any questions or if you need any additional information.

Sincerely,

Brian M. Ross, PE
Vice President
Structural Engineer

NORTH CAROLINA PROFESSIONAL SEAL 25539 3·22·2012 ENGINEER C120306 BRIAN M. ROSS

SEAL NOT VALID UNLESS SIGNED AND DATED

710 W. North Street Raleigh, NC 27603 tel 919.832.5680 fax 919.832.5675 www.rosslinden.com

Plan View

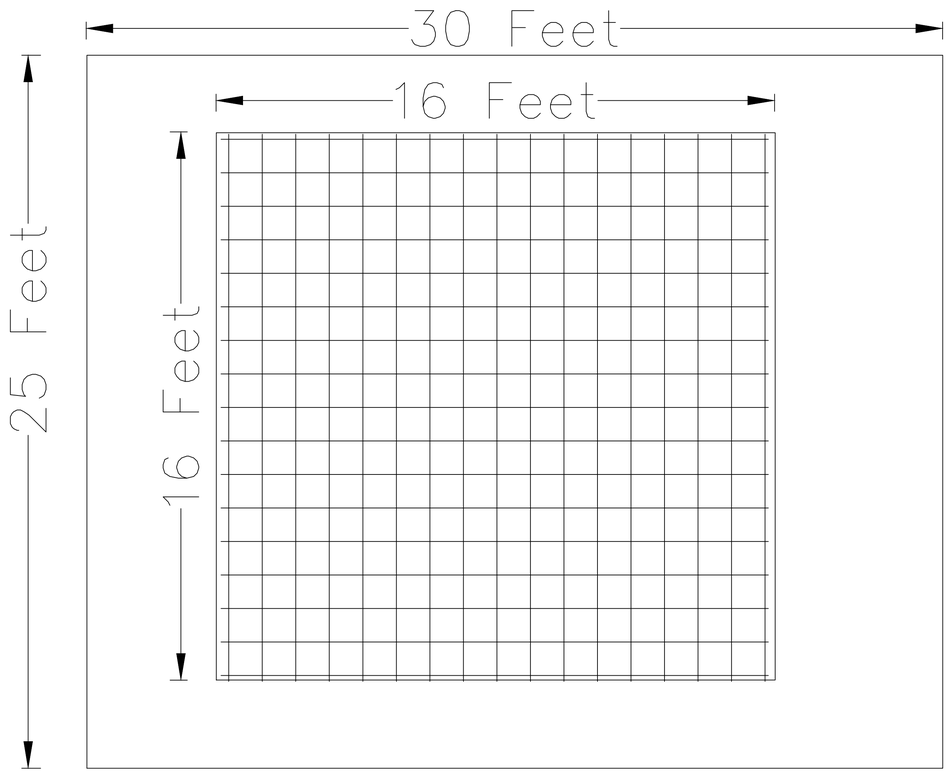

Section View

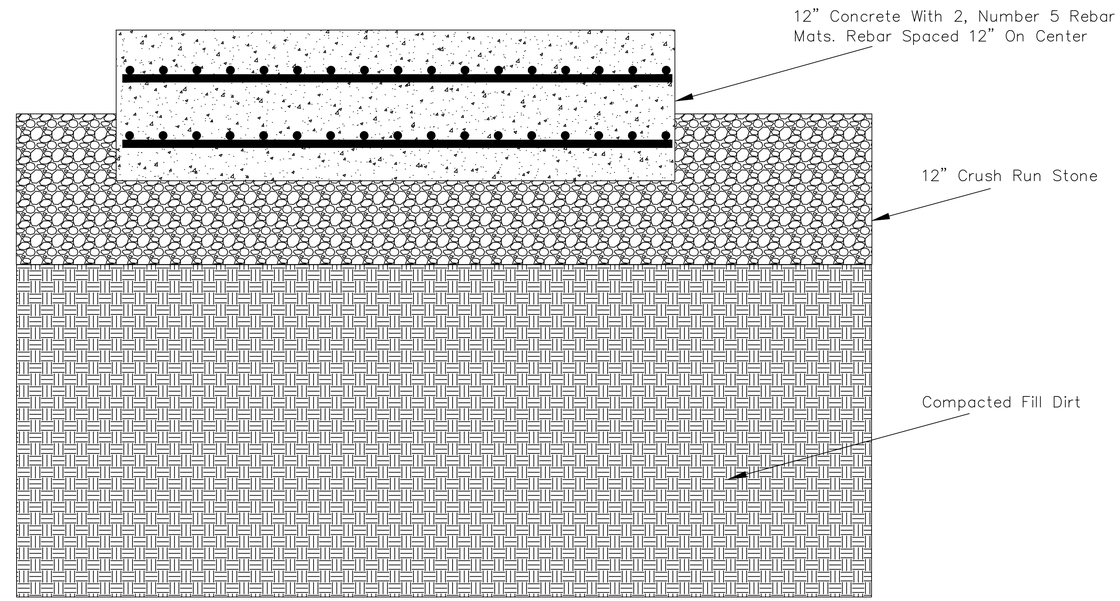

DRAWN BY: RG	*Project Owner:*	*SEAL:*	*Project Title:*	DRAWING TITLE:	**TANK PAD DETAILS**
SURVEY BY:	**MP WILSON, LLC**		**Wilson County LFG Expansion**	SITE OWNER:	**WILSON COUNTY LANDFILL, NC**
CHECKED BY:	**121 EDINBURGH SOUTH DRIVE, SUITE 207**		**Tank Pad Details**	SCALE:	**NONE**
FILE NAME:	**CARY, NORTH CAROLINA 27511**			DATE:	**January 2012**
	(PH) 919-297-7206 CH4POWER smart energy (FAX) 919-297-7211			SHEET NO.	**1 OF 1**

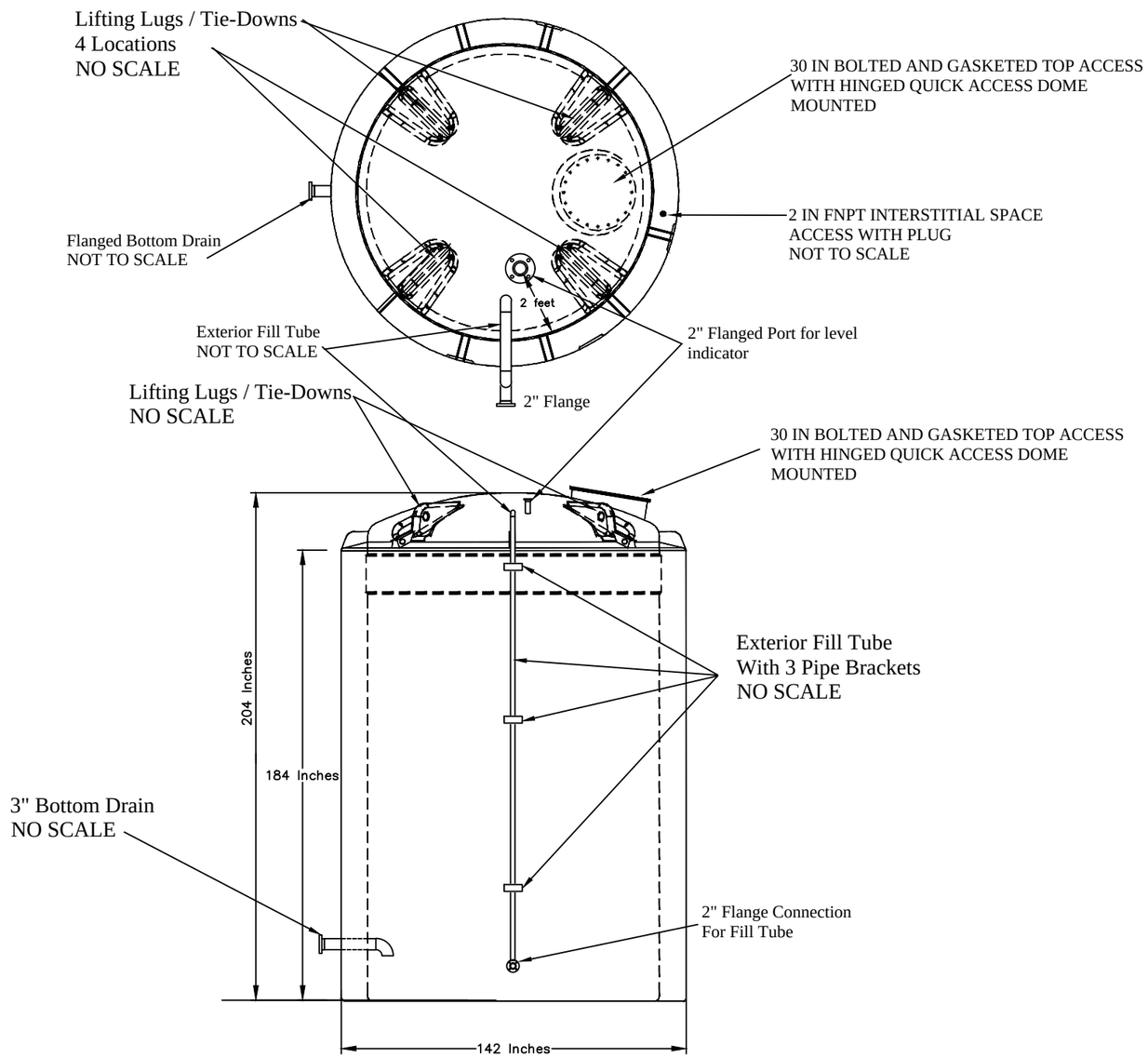

DRAWN BY:	*Project Owner:*	*SEAL:*	*Project Title:*	DRAWING TITLE:	**FUTURE 9500 CONDENSATE STORAGE TANK** :
SURVEY BY:	**MP WILSON, LLC**		**WILSON COUNTY LANDFILL**	SITE OWNER:	**WILSON COUNTY LANDFILL, NC**
CHECKED BY:	**121 EDINBURHG SOUTH DRIVE, SUITE 207**		**GAS COLLECTION SYSTEM**	SCALE:	**NONE**
FILE NAME:	**CARY, NORTH CAROLINA 27511**		**DEWATERING MODIFICATIONS**	DATE:	**SEPTEMBER 2011**
CUCWILNC-1091	(PH) 919-297-7206 (FAX) 919-297-7211			SHEET NO.	**1 OF 1**

PROTECTOPLAS COMPANY

DIVISION OF EBCO, INC.
3500 CRANE CENTER DRIVE
STREETSBORO OHIO 44241 USA
TELEPHONE: 800.525.2661 & 330.562.8265 FAX: 330.562.2560
QUALITY PLASTIC TANKS & PROCESSING EQUIPMENT SINCE 1972

QUOTE #: 2511-473

TO:

CHANDLER CONST SERVICES
1511 NINETY SIX HIGHWAY
NINETY SIX, SC 29666
BOB GETTYS

DATE: 8/31/2011	**TERMS:** 25%/ 50% / 25% Net 30	FOB: STREETSBORO, OH	**SHIP VIA:** BEST WAY

QTY.	DESCRIPTION
1	9500 GAL DOUBLE WALLED TANK. HEAVY PRIMARY CONTAINMENT TO BE (1) PIECE MOLDED HDLPE. SECONDARY TO BE (1) PIECE MOLDED OF HDLPE. TANK IS FLAT BOTTOM, VERTICAL, CLOSED TOP. TANK HAS A SEALED AND VENTED INTERSTITIAL SPACE. NOM DIM OF 142 IN DIA X 204 IN TALL. TANK DESIGNED FOR CONTENTS TO 1.7 S.G PER ASTM D-1998 USING A 600 PSI HOOP. COLOR: NATURAL TANK INCLUDES: 1-SEALED INTERSTITIAL SPACE 1-1 IN INTERSTITIAL SPACE DOWNPIPE WITH MUSHROOM VENT 1-2 IN FNPT INTERSTITIAL SPACE ACCESS WITH PLUG 4-COMBO LIFTING / HOLD DOWN LUGS
1	30 IN BOLTED AND GASKETED TOP ACCESS AND HINGED QUICK ACCESS DOME MOUNTED
1	2 IN RAISED FACE WELDED FLANGE NOZZLE GUSSETTED IN (4) PLACES 150LB BOLT SPACING DOME MOUNTED
3	EXTERIOR SIDE WALL PIPE CLAMPS
1	2" SCH 80 PVC EXTERIOR FILL PIPE. TERMIATES WITH 2 IN PP BALL VALVEWITH 2 IN MALE QUICK CONNECT AND DUST CAP
1	2 IN RAISED FACE, WELDED, 150# ANSI BOLT SPACED, DOUBLE WALL FLANGE FITTING SIDE BOTTOM DRAIN
	TANK SHIPS AS AN OVERSIZED LOAD VIA DEDICATED DOUBLE DROP TRUCK.

NOZZLE SCHEDULE & ACCESSORY LIST					
TAG	QTY	SIZE	DESCRIPTION	DEG	ELEV

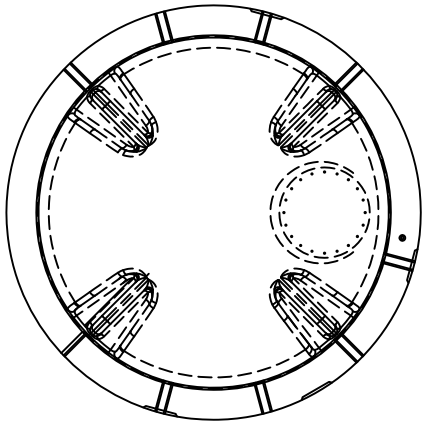

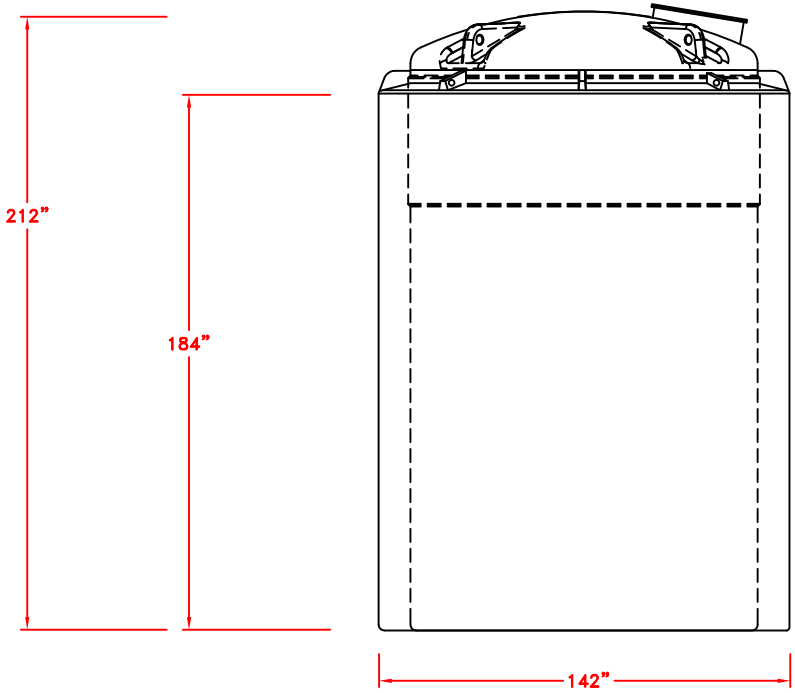

GENERAL NOTES:

1. MATERIAL: TANK TO BE ONE PIECE MOLDED OF HIGH DENSITY POLYETHYLENE, COLOR: NATURAL, DESIGNED FOR CONTENTS TO S.G. TANKS ARE MOLDED FROM RESIN THAT IS FDA COMPLIANT AND CONFORMS TO NSF/ANSI STANDARD 61.
2. CONTENTS:
3. OPERATING TEMP:
4. FLANGES TO BE HAND WELDED W/ NITROGEN GAS
5. ORIENT ALL FITTINGS FROM PLAN VIEW
6. TANK REQUIRES 100% BOTTOM SUPPORT
7. ALL PIPING & VALVES MUST HAVE IT'S OWN SUPPORT AND ALLOW FOR TANK EXPANSION & CONTRACTION OF 1.5% DIMENSIONAL MOVEMENT. FLEX CONNECTIONS SHOULD BE DESIGNED FOR A .5° ANGULAR MOVEMENT.
8. TANK IS TO BE LOCATED
9. TANK IS DESIGNED FOR ATMOSPHERIC PRESSURE ONLY
10. ALL WFN/WPFN FLANGES ARE 150# BOLT SPACED PER ANSI B16.5, THEY ARE FULL RAISED FACE DESIGN AND REQUIRE FULL FACED GASKETS.
11. ALL WFN/WPFN NOZZLES REQUIRE 11 FT-LBS OF TORQUE TO SEAL. DO NOT OVER TIGHTEN FLANGES.
12. CHECK BOLT LENGTH WHEN PIPING TO A WPFN FLANGE BEFORE INSTALLATION. WPFN REQUIRE SHORTER BOLT LENGTHS.
13. CHECK ALL CHEMICAL AND TEMPERATURE COMPATIBILITY WITH CONSTRUCTION MATERIAL PRIOR TO TANK USE.
14. ALL DIM. ARE IN INCHES/DEGREES UNLESS OTHERWISE NOTED.

QUAN. REQ.: ( )

THIS DRAWING IS PROPERTY OF PROTECTOPLAS COMPANY. IT MAY NOT BE ALTERED OR COPIED WITHOUT WRITTEN PERMISSION FROM PROTECTOPLAS COMPANY.

THIS DRAWING, THE NAME"PROTECTOPLAS", AND ALL LOGOS ARE PROPERTY OF EBCO INC. THEY MAYNOT BE ALTERED, COPIED, OR USED IN ANY WAY WITHOUT WRITTEN PERMISSION FROM EBCO INC.

REV. NO.	REV. BY	REV. NOTE
CUSTOMER		
TITLE	DW9500 DOUBLE WALLED TANK	
PROTECTOPLAS	PROTECTOPLAS COMPANY DIVISION OF EBCO, INC. STREETSBORO, OHIO 44241 USA	
SCALE: NTS	BY: ZE	DATE: 3/23/2011 DRW NO.

Attachment D

Record Photographs

Photo #1: Completed temporary storage tank

Photo #2: Rebar tank foundation prior to pouring concrete.

Photo #3: Completed pump installation at EW-9.

Photo #4: Completed condensate sump CS-2.

Photo #5: View of project facing northwest.

Photo #6: View of project facing southeast.

Photo #7: Shovel test pit.

Photo #8: Completed insulation on storage tank.

Attachment E

High Level Shut-off Relay

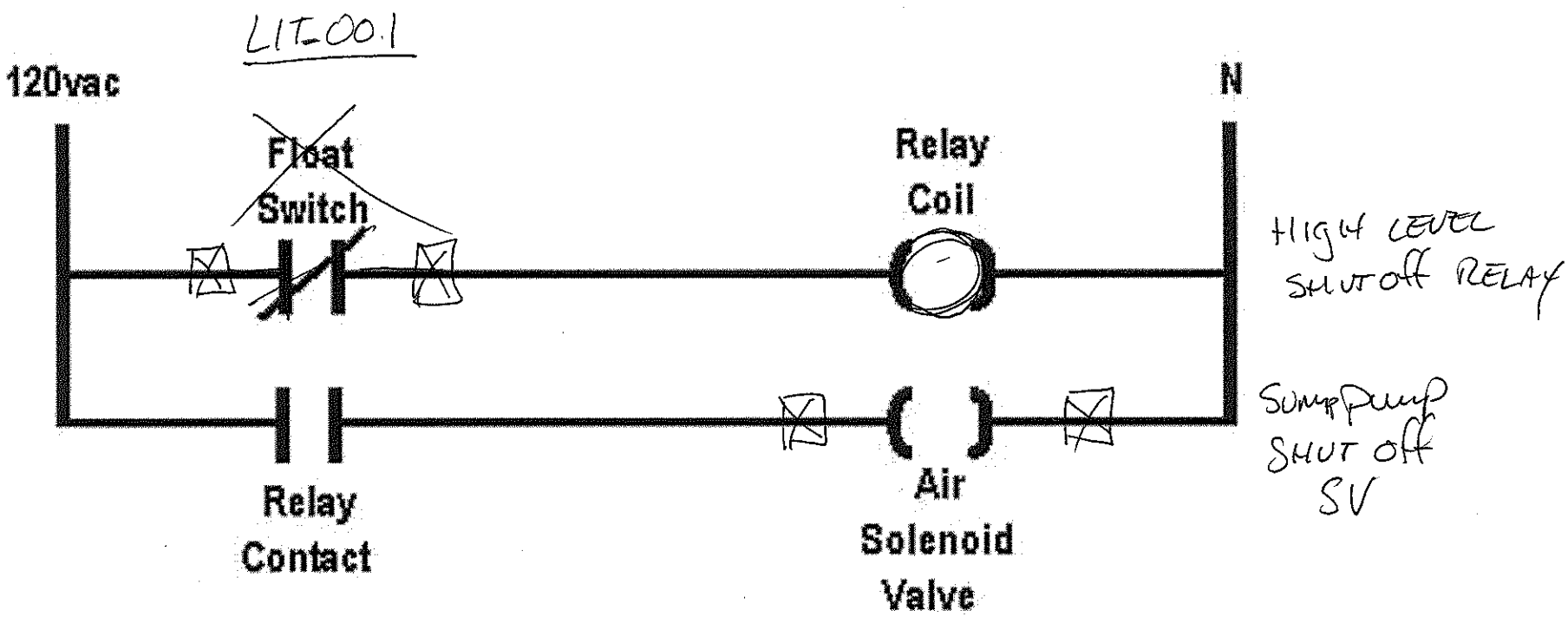

SUMP PUMP RELAY PANEL

© Siemens AG 2011

HydroRanger 200

Overview

HydroRanger 200 is an ultrasonic level controller for up to six pumps and provides control, differential control, and open channel flow monitoring.

Benefits

- Monitors wet wells, weirs and flumes
- Digital communications with built-in Modbus RTU via RS-485
- Compatible with SmartLinx system and SIMATIC PDM configuration software
- Single or dual point level monitoring
- 6 relay (standard), 1 or 3 relay (optional)
- Auto False-Echo Suppression for fixed obstruction avoidance
- Anti-grease ring/tide mark buildup
- Differential amplifier transceiver for common mode noise rejection and improved signal-to-noise ratio
- Wall and panel mounting options

Application

For water authorities, municipal water, and wastewater plants, HydroRanger 200 is an economical, low-maintenance solution delivering control efficiency and productivity needed to meet today's exacting standards. It offers single point monitoring with all models, and optional dual-point monitoring with 6 relay model. As well, it has digital communications with built-in Modbus RTU via RS-485.

The standard 6 relay HydroRanger 200 will monitor open channel flow and features more advanced relay alarming and pump control functions as well as volume conversion. It is compatible with SIMATIC PDM, allowing for PC configuration and setup. Sonic Intelligence advanced echo-processing software provides increased reading reliability. The optional 1 or 3 relay models provide accurate level measurement functions only; these two models do not provide open channel flow, differential level measurement or volume conversion functions.

HydroRanger 200 uses proven continuous ultrasonic echo ranging technology to monitor water and wastewater of any consistency up to 15 m (50 ft) in depth. Achievable resolution is 0.1% with accuracy to 0.25% of range. Unlike contacting devices, HydroRanger 200 is immune to problems caused by suspended solids, harsh corrosives, grease or silt in the effluent, reducing downtime.

- Key Applications: wet wells, flumes/weirs, bar screen control

© Siemens AG 2011

Technical specifications

Mode of Operation	
Measuring principle	Ultrasonic level measurement
Measuring range	0.3 ... 15 m (1 ... 50 ft), transducer dependent
Measuring points	1 or 2
Input	
Analog	0 ... 20 mA or 4 ... 20 mA, from alternate device, scaleable (6 relay model)
Discrete	10 ... 50 V DC switching level Logical 0 = < 0.5 V DC Logical 1 = 10 ... 50 V DC Max. 3 mA
Output	
Echomax transducer	44 kHz
Ultrasonic transducer	Compatible transducers: ST-H and Echomax series XPS-10/10F, XPS 15/15F, XCT-8, XCT-12 and XRS-5
Relays[1]	Rating 5 A at 250 V AC, non-inductive
• Model with 1 relay[2]	1 SPST Form A
• Model with 3 relays[2]	2 SPST Form A/1 SPDT Form C
• Model with 6 relays	4 SPST Form A/2 SPDT Form C
mA output	0 ... 20 mA or 4 ... 20 mA
• Max. load	750 Ω, isolated
• Resolution	0.1 % of range
Accuracy	
Error in measurement	0.25% of range or 6 mm (0.24"), whichever is greater
Resolution	0.1% of measuring range or 2 mm (0.08"), whichever is greater[3]
Temperature compensation	• -50 ... +150 °C (-58 ... +302 °F) • Integral temperature sensor in transducer • External TS-3 temperature sensor (optional) • Programmable fixed temperature values
Rated operating conditions	
Installation conditions	
• Location	indoor / outdoor
• Installation category	II
• Pollution degree	4
Ambient conditions	
Ambient temperature (enclosure)	-20 ... +50 °C (-4 ... +122 °F)

Design	
Weight	
• Wall mount	1.37 kg (3.02 lbs)
• Panel mount	1.50 kg (3.31 lbs)
Material (enclosure)	Polycarbonate
Degree of protection (enclosure)	
• Wall mount	IP65/Type 4X/NEMA 4X
• Panel mount	IP54/Type 3/NEMA 3
Cable	
• Transducer and mA output signal	2-core copper conductor, twisted, shielded, 300 Vrms, 0.82 mm² (18 AWG), Belden 8760 or equivalent is acceptable
• Max. separation between transducer and transceiver	365 m (1200 ft)
Displays and controls	100 x 40 mm (4 x 1.5") multi-block LCD with backlighting
Programming	Programming using handheld programmer or via PC with SIMATIC PDM software
Power supply[4]	
AC version	100 ... 230 V AC ± 15%, 50/60 Hz, 36 VA (17 W)
DC version	12 ... 30 V DC (20 W)
Certificates and approvals	• CE, C-TICK[5] • Lloyd's Register of Shipping • ABS Type Approval • FM, $CSA_{US/C}$, UL listed • $CSA_{US/C}$ Class I, Div. 2, Groups A, B, C and D, Class II, Div. 2, Groups F and G, Class III (wall mount only) • MCERTS Class 1 approved for Open Channel Flow
Communication	• RS-232 with Modbus RTU or ASCII via RJ-11 connector • RS-485 with Modbus RTU or ASCII via terminal blocks • Optional: SmartLinx cards for - PROFIBUS DP - DeviceNet - Allen-Bradley Remote I/O

1) All relays certified for use with equipment that fails in a state at or under the rated maximums of the relays
2) This model is level control only; no open channel flow, differential level or volume conversion functions
3) Program range is defined as the empty distance to the face of the transducer plus any range extension
4) Maximum power consumption is listed
5) EMC performance available upon request

© Siemens AG 2011

HydroRanger 200

Selection and Ordering data		Order No.
Siemens HydroRanger 200	L)	**7ML5034-**
Ultrasonic level controller for up to six pumps that provides control, differential control and open channel flow monitoring. The HydroRanger 200 is also available as a level measurement controller only. Select option from number of measurement points options below.		
Mounting		
Wall mount, standard enclosure		**1**
Wall mount, 4 entries, 4 M20 cable glands included		**2**
Panel mount[1]		**3**
Power supply		
100 ... 230 V AC		**A**
12 ... 30 V DC		**B**
Number of measurement points		
Single point model, 6 relays		**A**
Dual point model, 6 relays		**B**
Single point model, level only, 1 relay[2]		**C**
Single point model, level only, 3 relays[2]		**D**
Communication (SmartLinx)		
Without module		**0**
SmartLinx Allen-Bradley Remote I/O module		**1**
SmartLinx PROFIBUS DP module		**2**
SmartLinx DeviceNet module See SmartLinx product page 5/120 for more information.		**3**
Approvals		
General Purpose CE, FM, $CSA_{US/C}$, UL listed, C-TICK		**1**
CSA Class I, Div. 2, Groups A, B, C and D; Class II, Div 2, Groups F and G; Class III (for wall mount applications only)		**2**

1) Available with approval option 1 only
2) This model is level control only; no open channel flow, differential level, or volume conversion functions
L) Subject to export regulations AL: N, ECCN: 3A991X.

Selection and Ordering data		Order code
Further designs		
Please add "**-Z**" to Order No. and specify Order code(s).		
Stainless steel tag [69 x 50 mm (2.71 x 1.97")]: Measuring-point number/identification (max. 16 characters) specify in plain text		**Y15**
Operating Instructions		Order No.
English	C)	**7ML1998-5FC03**
French	C)	**7ML1998-5FC11**
German Note: The Operating Instructions should be ordered as a separate item on the order. This device is shipped with the Siemens Milltronics manual CD containing the complete ATEX Quick Start and Operating Instructions library.	C)	**7ML1998-5FC33**
Other Operating Instructions		
SmartLinx Allen-Bradley Remote I/O, English	C)	**7ML1998-1AP03**
SmartLinx PROFIBUS DP, English	C)	**7ML1998-1AQ03**
SmartLinx PROFIBUS DP, German	C)	**7ML1998-1AQ33**
SmartLinx DeviceNet, English Note: The appropriate SmartLinx Operating Instructions should be ordered as a separate line on the order.	C)	**7ML1998-1BH02**
Accessories		
Handheld programmer		**7ML1830-2AK**
Tag, stainless steel, 12 x 45 mm (0.47 x 1.77"), one text line, suitable for enclosure		**7ML1930-1AC**
Sunshield kit, 304 SS		**7ML1930-1GA**
SITRANS RD100 Remote display - see Chapter 8		
SITRANS RD200 Remote display - see Chapter 8		
SITRANS RD500 web, datalogging, alarming, ethernet, and modem support for instrumentation - see Chapter 8	K)	**7ML5750-1AA00-0**
Spare parts		
Power Supply Board (100 ... 230 V AC)	C)	**7ML1830-1MD**
Power Supply Board (12 ... 30 V DC)	C)	**7ML1830-1ME**
Display Board	C)	**7ML1830-1MF**

C) Subject to export regulations AL: N, ECCN: EAR99.
K) Subject to export regulations AL: N, ECCN: 5A991X.

© Siemens AG 2011

Dimensional drawings

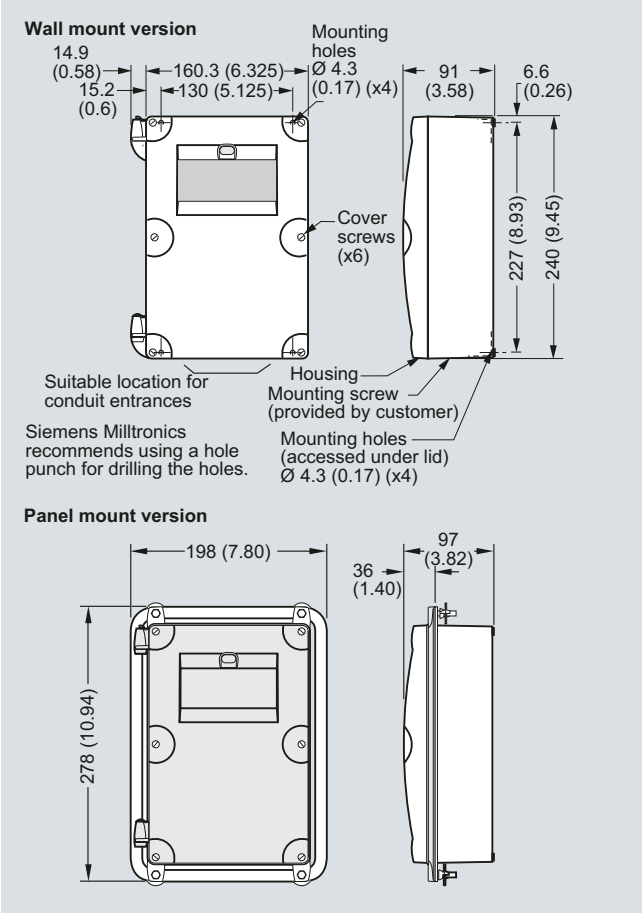

HydroRanger 200, dimensions in mm (inch)

Schematics

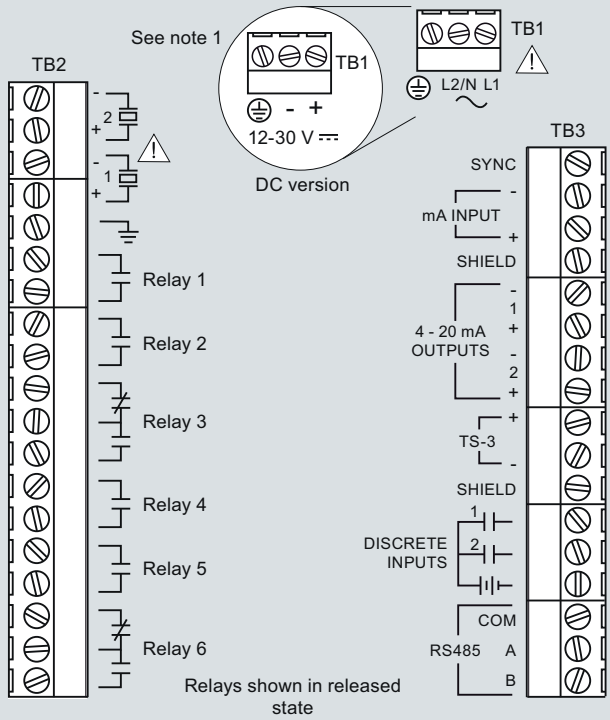

Notes

1. Use 2-core copper wire, twisted, with shield, for expansion up to 365 m (1200 ft.). Route cable in grounded metal conduit, separate from other cables.
2. Verify that all system components are installed in accordance with instructions.
3. Connect all cable shields to the HydroRanger 200 Shield Connections. Avoid differential ground potentials by not connecting cable shields to ground (earth) anywhere else.
4. Keep exposed conductors on shielded cables as short as possible to reduce noise on the line caused by stray transmissions and noise pickup.

HydroRanger 200 connections