McGill
ASSOCIATES

RECEIVED

FEB - 3 2011

SOLID WASTE SECTION
ASHEVILLE REGIONAL OFFICE

February 3, 2011

Fac/Perm/Co ID #	Date	Doc ID#
58-03	2/4/11	12857

Mr. Allen Gaither
Regional Engineer
Solid Waste Permitting Section
Division of Waste Management
North Carolina Department of Environment and Natural Resources
2090 U.S. Highway 70
Swannanoa, North Carolina 28778

RE: Operations Plan
Madison County MSW Landfill
Permit # 58-03
Madison County, North Carolina

Dear Mr. Gaither:

On behalf of Madison County, McGill Associates is pleased to submit the updated Operations Plan for the Madison County MSW Landfill Facility, Permit #58-03, located in Madison County, North Carolina. This Operations Plan supercedes in its entirety the Operations Plan for the facility dated September 2010 and received by your office on September 28, 2010.

This Operations Plan has been updated to address the items for which you requested clarification and/or submission of additional information. These were outlined in your letter dated December 10, 2010 to Mr. Jim Huff, Solid Waste Director for Madison County, North Carolina.

In addition to the printed copy of the Operations Plan, a digital copy of the Plan, complete with applicable attachments, is enclosed for your use.

We appreciate your attention to Madison County's submittal of an updated Operations Plan as well as their request to install an underground leachate collection tank in lieu of the existing leachate collection lagoon. Should you have any questions or if we can be of further assistance, please give us a call.

Sincerely,
McGILL ASSOCIATES, P.A.

WILLIAM H. SPERRY, PE
Project Manager

Enclosures

cc: Ms. Andrea Keller, Environmental Senior Specialist, NCDENR, w/o enclosures
Mr. Jim Huff, Director, Madison County Solid Waste Department, w/enclosures

P:\2009\09.00729\Letters\11 0203 - A Gaither - Operations Plan - Madison Cty.doc

OPERATIONS PLAN

SOLID WASTE TRANSFER STATION
CONSTRUCTION and DEMOLITION
LANDFILL - UNIT 2
MULCHING AND GRINDING TREATMENT AND PROCESSING

MADISON COUNTY, NORTH CAROLINA

WILLIAM H. SPERRY, PE

McGill ASSOCIATES

Engineering • Planning • Finance
Asheville, North Carolina

NORTH CAROLINA PROFESSIONAL SEAL 36132 ENGINEER WILLIAM H. SPERRY

2/3/11

September 2010
Revised: February 2011

09.00729

OPERATIONS PLAN

SOLID WASTE TRANSFER STATION
CONSTRUCTION AND DEMOLITION LANDFILL – UNIT 2
MULCHING AND GRINDING TREATMENT AND PROCESSING

MADISON COUNTY, NORTH CAROLINA

TABLE OF CONTENTS

TABLE OF CONTENTS i

INTRODUCTION 1

1.0 Purpose of Plan 1
2.0 Facility Location 1
3.0 Service Area 2
4.0 Stormwater Management 2
5.0 Facility Site Plan / Site Description Map 2

SOLID WASTE TRANSFER STATION 3

1.0 Overview 3
2.0 Personnel 3
3.0 Characterization of Waste Stream 3
4.0 Inspection of Wastes 4
5.0 Traffic Control 4
6.0 Housekeeping, Litter and Vector Control 5
7.0 Dust and Fire Control 5
8.0 Wastewater Collection 6
9.0 Storm Water Management and Erosion Control 6
10.0 Zoning 6
11.0 Facility Inspections 7

TABLE OF CONTENTS

CONSTRUCTION AND DEMOLITION LANDFILL – UNIT 2 8

1.0 Waste Acceptance and Disposal Requirements 8
1.1 Prohibited Wastes 8
1.2 Asbestos 9
1.3 Waste Inspections 10
2.0 Cover Material Requirements 11
2.1 Requirements 11
2.2 Intermediate Cover 11
3.0 Disease and Vector Control 11
4.0 Air Quality 11
4.1 Title V Air Permit Requirements 11
4.2 Prohibition on Open Burning 11
4.3 Hot Load Procedures 12
4.4 Hot Load Notification 12
5.0 Access and Safety Requirements 12
5.1 Landfill Access 12
5.2 Dust Control 12
5.3 Signage 13
5.4 Prohibition on Scavenging 13
6.0 Erosion and Sedimentation Control Requirements 13
7.0 Drainage Control and Water Protection Requirements 14
7.1 Surface Water 14
7.2 Discharge of Water and Leachate 15
7.3 Solid Waste Requirements 15
8.0 Record Keeping Requirements 15
8.1 Record Keeping Requirements 15
8.2 Operating Record 15
9.0 Spreading and Compacting Requirements 16

MULCHING AND GRINDING TREATMENT AND PROCESSING 17

1.0 Purpose of Plan 17
2.0 Facility Location 17
3.0 Service Area 17
4.0 Siting Requirements 17
5.0 Operations Procedures 18
5.1 Overview 18
5.2 Personnel 18
5.3 Technical Operational Requirements 18
5.4 Traffic Control 19

TABLE OF CONTENTS

5.5 Housekeeping, Litter and Vector Control 19
5.6 Fire Control 19
5.7 Storm Water Management and Erosion Control 19
5.8 Zoning 19
5.9 Temporary Disaster Debris Staging/Storage Area 19

HOUSEHOLD HAZARDOUS WASTE COLLECTION FACILITY 20

1.0 Wastes Received 20
2.0 Reporting Requirements 20

OTHER SERVICES, COLLECTION FACILITIES AND/OR OPERATIONS 21

1.0 White Goods/Scrap Metals 21
2.0 Scrap Tires 21
3.0 Waste Oil, Antifreeze and Used Oil Filters 21
4.0 Cooking Oil 21
5.0 Batteries 21
6.0 Electronics 22
7.0 Underground Leachate Storage Tank 22

EXPLOSIVE GAS CONTROL 23

1.0 Methane Gas Concentration Limits 23
2.0 Explosive Gas Monitoring Program 23
3.0 Methane Gas Response Plan 23

APPENDICES:

Appendix A: Revised Facility Site Plan
Site Description Maps
Appendix B: Underground Leachate Storage Tank
- Narrative
- Enclosure "A": Sheet C-101, Site Plan
  Sheet C-501, Miscellaneous Details
- Enclosure "B": Technical Specification

Appendix C: Leachate Acceptance Letter, Town of Marshall, North Carolina
Appendix D: Explosive Gas Monitoring Procedure
- Attachment 1: Landfill Gas Measurements – Field Worksheet

OPERATIONS PLAN

SOLID WASTE TRANSFER STATION
CONSTRUCTION AND DEMOLITION LANDFILL – UNIT 2
MULCHING AND GRINDING TREATMENT AND PROCESSING

MADISON COUNTY, NORTH CAROLINA
September 2010

INTRODUCTION

1.0 Purpose of Plan

This operation plan has been developed for the Solid Waste Transfer Station and the Construction and Demolition Landfill – Unit 2 located in Madison County, North Carolina. This plan has been prepared in accordance with the requirements of the North Carolina Department of Environment and Natural Resources (NCDENR), Division of Solid Waste Management, Solid Waste Rules (15A NCAC 13B).

The purpose of this plan is to provide the owner and operator with a reference manual that includes necessary information and procedures for properly operating the Transfer Station, Construction and Demolition Landfill – Unit 2 and other ancillary services. The plan will assist the County with complying with the applicable rules and regulations concerning the operation of various processing facilities. All personnel involved with the management or supervision of operations at the facility will be required to review the Operation Plan and to maintain the facility in conformance with applicable requirements. A copy of the Operation Plan will be kept in the vicinity of the various operations at all times.

2.0 Facility Location

The Solid Waste Transfer Station, Construction and Demolition Landfill – Unit 2, Mulching and Grinding Treatment and Processing Facility and other ancillary services are located on property owned by Madison County just North of Marshall, North Carolina. This property also contains the closed municipal solid waste (MSW) landfill, a closed construction and demolition (C/D) landfill, a recycling center, scale house facility, the Madison County Sheriff's Department Firing Range and one of the County's convenience centers.

3.0 Service Area

The Transfer Station Facility will provide waste disposal services for waste materials generated in Madison County only.

4.0 Stormwater Management

The Madison County Landfill Facility operates under a stormwater discharge permit issued by the NCDENR-Division of Water Quality, Permit No. NCG120082, requiring regular monitoring of stormwater discharge locations.

5.0 Facility Site Plan / Site Description Map

The Revised Facility Site Plan is included in Appendix A. Appendix A also includes Site Description Maps for the site that defines the metes and bounds survey of the facility. The original facility property boundary is shown in Figure 2, Site Description Map, Landfill Site, Law Environmental, Revised December 18, 1991. Figure 2 is a metes and bounds survey of the original Landfill Site as prepared by McMahan & Associates, P.A., dated November 15, 1990. An additional tract was subsequently added to the original landfill site and is noted as Parcel One, 1.11 acres, on a survey prepared by McMahan & Associates, P.A., Revised June 2, 2005. Parcel Two, 0.75 acres, is included in the original Site Description Map (Law Environmental) and was initially intended as a trade-off in the negotiations by the County to acquire Parcel One. However, this trade-off did not occur and Parcel Two remains in the overall site property boundary.

SOLID WASTE TRANSFER STATION

1.0 Overview

The Transfer Station consists of a pre-engineered metal building with an approximate 3,600 ft^2 tipping floor and lowered access/loading corridor for transfer trucks. Incoming waste collection vehicles deposit municipal solid waste (MSW) directly onto the concrete tipping floor of the facility. Once the MSW has been dumped onto the tipping floor, it will be inspected for illegal wastes and/or hazardous wastes. Illegal and hazardous wastes will be diverted from the waste stream and disposed of properly in a hazardous waste landfill. Construction and demolition (C/D) waste will be diverted from the waste stream and taken to the Construction and Demolition Landfill – Unit 2. Once the MSW has been inspected for unacceptable materials, a loader will push the remaining MSW to the rear of the tipping floor where it will be dropped into a transfer truck on the lower level. The waste will then be transferred by truck to Lakeway Recycling and Sanitation Landfill in Lowland, Tennessee on Hwy. 160, Tennessee DEC Number SNL32-0280.

Normal operating hours for the Transfer Station are 8:00 a.m. to 3:45 p.m., Monday through Friday. The Transfer Station is closed on Saturday, Sunday and the following holidays: New Year's Day, Independence Day, Thanksgiving Day, Christmas Day and other holidays as designated by the County. The normal operating hours for the Citizen's Convenience Center, located at the Madison County Landfill Facility, are 8:00 a.m. to 4:30 p.m. Monday through Friday and 8:00 a.m. to 12:00 noon on Saturday. The Citizen's Convenience Center is closed on Sunday and the following holidays: New Year's Day, Independence Day, Thanksgiving Day, Christmas Day and other holidays as designated by the County.

2.0 Personnel

The facility is owned and operated by Madison County. A minimum of two (2) staff employees is required for the daily operation of the Transfer Station. These employees are properly trained in safety procedures and the inspection of incoming wastes (refer to section 4, "Inspection of Wastes"). Training material published by the Solid Waste Association of North America (SWANA), is utilized for initial training of on-site personnel and for continuing education. The Transfer Station employees also direct and coordinate the movement of collection vehicles into and out of the Transfer Station.

3.0 Characterization of Waste Stream

The waste received at the Solid Waste Transfer Station will have the same characterization as the waste accepted at a MSW landfill.

4.0 Inspection of Wastes

Access to the Transfer Station is controlled by properly trained employees, located at the entrance of the facility. As the contents of the collection vehicles are emptied onto the tipping floor, an employee will conduct periodic visual inspections of the waste materials. If unacceptable waste is found, the driver of the vehicle will be instructed to terminate dumping and the unacceptable waste will be reloaded onto the vehicle for removal from the site. Examples of unacceptable wastes include large containers of liquid waste, sludges, drums that have not been emptied and crushed prior to delivery, and containers either smoking or emitting noxious vapors.

If hazardous waste is identified during vehicle dumping, facility personnel will immediately notify the driver and if necessary, contact NCDENR and the Hazardous Materials Emergency Response Team. The appropriate information concerning the waste will be provided to those officials and the recommended steps will be taken until properly trained handlers of hazardous waste arrive on-site.

Infectious or medical waste haulers are advised that the Transfer Station does not accept such wastes and that the hauler will have to transport the infectious wastes to an approved facility for disposal.

Should a "hot load" occur in a vehicle using the facility; the attendant will not permit the load to be discharged onto the tipping floor. The vehicle operator will be advised to move the vehicle to a paved area located outside the Transfer Station where the load will be discharged. The local fire department will be notified prior to discharge to identify the cause of the problem and extinguish the load fire. Once the load has been extinguished and the cause determined, the load will be taken into the facility for disposal. No asbestos or animal wastes will be accepted at the Transfer Station.

The above limitations on the types of wastes that will be accepted do not circumvent the incidental wastes that may be found in the residential waste stream that is expected at the facility.

5.0 Traffic Control

Site personnel control access to the Transfer Station. A gate controls the entrance to the landfill and the transfer station. As vehicles arrive at the Transfer Station, site personnel will direct the driver to position the vehicle at the correct unloading location once there is sufficient room to maneuver on the concrete floor. When the contents of the vehicle are emptied, the driver is instructed to move the vehicle away from the tipping floor and exit the Transfer Station.

During times when several vehicles are at the Transfer Station at the same time, haulers are instructed to wait within the staging area located outside the entrance to the building. The tipping area will allow for two (2) trucks to dump simultaneously.

6.0 Housekeeping, Litter and Vector Control

Incoming wastes will be transported to the Transfer Station in covered or enclosed vehicles. Outgoing transfer trailers will also be covered or enclosed. Throughout the day and at the end of each working day, facility personnel will police the building and surrounding site for litter. Collected litter is placed in containers for proper disposal. A yard hydrant will be available to wash down the concrete tipping floor and adjacent equipment areas when needed. The equipment used for pushing trash on the tipping floor will also have a bucket equipped with a squeegee. The wash water flows into a trench drain located just inside of the building entrance. The drain will be covered by a metal grate to block large debris that might clog the drain. The metal grate is raked periodically and the collected trash is placed into containers for proper disposal. The drain is connected to a six (6)-inch sewer line that also services the office and restrooms for the facility. The sewer line drains to a wastewater storage tank outside the Transfer Station. A wastewater hauling truck will be scheduled to pump out wastewater as necessary.

Odors are controlled by prompt unloading and transfer of all delivered wastes at the Transfer Station. The Transfer Station has the upper 60' end of the building completely open, which will allow adequate access to all areas of the building to ease operations, maintenance, and cleaning. The open end of the building and roof mounted ventilation fans will provide adequate fresh air exchange to control odor problems.

The daily removal of solid waste in conjunction with daily housekeeping procedures effectively controls the development of vector related problems. The tipping floor is constructed of concrete, which is a relatively impervious, readily cleanable material. Floor and equipment wash-downs at the Transfer Station will also reduce both odor and vector problems. As described previously, wash water will be diverted to the wastewater storage tanks located outside the building. Licensed exterminators will also be available to visit the Transfer Station as needed.

7.0 Dust and Fire Control

Since collection and transfer vehicles travel at low speeds on paved roads, dust generation is not a problem. Since the Transfer Station is located on the current landfill property, dust-controlling efforts of the landfill will keep dust generation at the Transfer Station to a minimum. Furthermore, periodic wash down of the

tipping floor and equipment will also prevent excessive build-up of dirt and dust at the facility.

Fire control is provided by portable hand-held fire extinguishers as well as a yard hydrant located just outside the building. Fire protection will be provided by the local fire department, which is aware of the fire control needs for the facility. In the event that a fire occurs, the local authorities will be notified immediately. The telephone numbers of local fire, police, ambulance and hospital facilities are posted in and around the facility at all times. In the event of a fire at the facility the NCDENR will be notified within 24 hours and written notification will be submitted within 15 days.

8.0 Wastewater Collection

The metal roof building that covers the Transfer Station minimizes wastewater generation. The driveway is sloped away from the transfer station floor to restrict outside flow from entering building. Wastewater flow at the Transfer Station will consist of wash down water and flow from the restroom. A trench drain collects the wash down water, while the restroom is plumbed to the wastewater collection line. The wastewater collection lines drain into an on-site storage tank with a capacity of approximately 5,000 gallons.

The level of liquid in the tank is generally monitored on a weekly basis or more often as operations/conditions dictate. A wastewater hauling truck will be scheduled as necessary to pump out wastewater to insure the tank has adequate reserve capacity to sustain normal operations. The wastewater will be hauled to the Town of Marshall Wastewater Treatment Facility. A copy of the letter from the Town of Marshall, agreeing to accept the leachate from the Madison County Solid Waste Facility is included in Appendix C.

9.0 Storm Water Management and Erosion Control

Areas adjacent to the Transfer Station are graded away from the building. Gutters and downspouts will also be positioned on the building to divert discharge of storm water to diversion ditches and storm drains.

10.0 Zoning

Since the Transfer Station is located on the Madison County Landfill property, zoning approved for the current solid waste management facilities would allow construction of the Transfer Station.

11.0 Facility Inspections

Regular maintenance inspections of the facility will be conducted. The inspections will be conducted by site personnel who are familiar with the buildings and equipment at the site, as well as operations of the facility. Monthly inspections, at a minimum, will include inspections of the following:

1. Building, foundation, and push walls
2. Ventilation system
3. Fire equipment
4. Electrical systems
5. Floor drains and yard hydrant
6. Wastewater storage tank

If unsatisfactory conditions are noted during the inspection or by Transfer Station personnel at any other time, the concerns will be reported to the Madison County Solid Waste Director. If a threat to safety or to the environment is identified, immediate action will be taken to correct the situation. If necessary, operations at the Transfer Station will be suspended temporarily until the proper corrective actions have been taken. In the unlikely event of a severe accident, the proper authorities will be notified and off-site support requested.

CONSTRUCTION AND DEMOLITION LANDFILL – UNIT 2

1.0 Waste Acceptance and Disposal Requirements

The CDLF Unit 2 will accept construction/demolition debris, wastes acceptable for disposal in a land clearing-inert debris landfill, and other wastes specifically approved by the Division. The CDLF will only accept waste generated in Madison County.

Construction/demolition debris is defined in the General Statutes as waste or debris resulting solely from construction, remodeling, repair, or demolition operations on pavement, buildings, or other structures.

Land clearing debris is defined in the Rules as waste that is generated solely through land clearing activities such as stumps, trees, limbs, brush, grass, and other naturally occurring vegetative matter.

Disposal of yard trash will not be allowed in the CDLF Facility. Yard trash is defined in the North Carolina General Statutes 130A-290 as "solid waste consisting solely of vegetative matter resulting from landscaping maintenance".

The CDLF will only accept permitted inert waste generated in Madison County. Madison County will notify the division within 24 hours of any attempts to dispose of non-permitted waste.

The Solid Waste Section may approve specific wastes for approval on a case-by-case basis for disposal at the CDLF. These wastes must be demonstrated to be inert through the Toxicity Characteristic Leaching Procedure (TCLP).

The new CDLF will accept asbestos waste if packaged properly in accordance with 40 CFR 61 and G.S. 150B-14(c). The waste shall be disposed of in virgin soil and at the bottom of the working face or in an area not contiguous with other disposal areas. The area shall be covered with soil immediately in a manner to avoid any airborne conditions and the disposal area shall be marked and/or the location documented in the permanent operating record of the landfill so that the waste is not disturbed by future landfilling activities.

1.1 Prohibited Wastes

The following wastes are prohibited from disposal at the CDLF:

- All municipal solid waste (MSW).
- All industrial waste.

- Hazardous waste as defined within 15A NCAC 13A, including hazardous waste from conditionally exempt small quantity generators.

- Polychlorinated biphenyls (PCB) waste as defined in 40 CFR 761.

- All liquid wastes are banned from the CDLF facility.

  NOTES: Liquid Waste means any waste material that is determined to contain "free liquids" as defined by Method 9095 (Paint Filter Liquids Test), as described in "Test Methods for Evaluating Solid Wastes, Physical/Chemical methods" (EPA Pub. No. SW-846).

  Paint Filter Liquids Test
  Procedure: The test is performed by placing a 100-milliliter sample of the waste in question in a conical, 400-micron paint filter. The waste is considered to be a liquid waste if any liquid from the waste passes through the filter within five minutes.

- Wastes prohibited by Statute GS 130A-309.10 of the North Carolina Solid Waste Management Rules. These wastes include:

  - used oil
  - yard trash
  - white goods
  - antifreeze (ethylene glycol)
  - whole scrap tires
  - lead-acid batteries

- Wastewater treatment sludges or any other waste containing organics.

1.2 Asbestos

All waste containing asbestos shall be managed in accordance with 40 CFR 61. When possible, the waste shall be placed at the bottom of the working face and in direct contact with the base liner system. Large quantities of asbestos shall be designated and located by the landfill operator. The horizontal location should be measured between two (2) permanent points and the elevation estimated and both recorded. The waste shall be covered with soil immediately upon disposal in a manner not to cause airborne materials.

1.3 Waste Inspections

Madison County shall continue a program at the landfill for detecting and preventing the disposal of hazardous or liquid waste or any other waste that the CDLF facility is not permitted to receive. The frequency of random inspections shall be based on the type and quantity of wastes received daily, and the accuracy and confidence desired in conclusions drawn from inspection observations. All incoming wastes of an unidentifiable nature or origin will be inspected. This shall include but not be limited to haulers with unknown service areas, to loads brought to the facility in vehicles not typically used for disposal of construction and demolition waste, and to loads transported by previous would-be offenders. The inspector should question the transporter about the source/composition of the materials for wastes of unidentifiable nature which are received from sources other than household (e.g., industrial or commercial establishments). The program will include the following:

Landfill personnel will conduct random inspections of typical incoming loads. Inspections will occur at a designated site, adjacent to the working face of the landfill unit. The load will be carefully spread by a front-end loader with personnel trained to identify hazardous and liquid waste or any other unacceptable waste. The frequency of the random inspections will be based on the type and quantity of wastes received, but not less than one inspection per week.

A record will be kept of each inspection that is performed. These records will be included and maintained in the operating record of the landfill.

Madison County will provide annual training to all landfill personnel in regard to recognizing hazardous and liquid waste.

Madison County has developed a contingency plan to properly manage identified hazardous or liquid waste. The plan involves the identification of the waste by inspection. If the inspector determines a load of waste to be of a hazardous nature, the landfill will not accept the waste and require that hauler remove the waste from the facility. If the inspector determines a load of waste to include wastes that should not be disposed of in the CDLF but can be disposed of in a MSW Landfill, then the hauler will be required to load the waste back into his vehicle and transport the load to the MSW transfer station.

2.0 Cover Material Requirements

2.1 Requirements

Madison County shall cover the disposed waste with six (6) inches of earthen material at least once a week or when the working area reaches one-half acre in size, or more often as necessitated by the nature of the waste to control disease vectors, fires, odors, blowing litter, water infiltration and scavenging.

2.2 Intermediate Cover

Madison County shall cover all waste areas that will be inactive for more than twelve (12) months and that have not reached final elevations with a minimum of one (1) foot of intermediate cover.

3.0 Disease and Vector Control

Madison County will control the spread of disease vectors by maintaining the cover requirements and picking up wind-blown trash as necessary to maintain a clean site.

4.0 Air Quality

4.1 Title V Air Permit Requirements

Madison County shall operate the Madison County CDLF in compliance with all applicable requirements developed under the State Implementation Plan (SIP) approved or promulgated by the U.S. EPA Administrator pursuant to Section 110 of the Clean Air Act, as amended. The Madison County Landfill will <u>not</u> be required to obtain a Title V operating permit since the on-site volume of waste is considerably less than the 2.5 million Megagrams of waste threshold. The existing MSW cell has a total capacity of 128,000 cubic yards of waste which equates to approximately .06 million Megagrams.

4.2 Prohibition on Open Burning

No open burning of solid waste shall be allowed at the landfill, except for the infrequent burning of land clearing debris that is generated by on-site clearing or debris from emergency clean-up operations. Any such infrequent burning will be approved by the local fire marshal and all local and State guidelines will be followed. The County will obtain all applicable permits prior to burning.

4.3 Hot Load Procedures

If a hot load of waste is delivered to the landfill, the driver shall not be allowed to dump the load. The driver shall be directed to a gravel or paved area in front of the MSW Transfer Station and instructed to dump the load there. The fire should be extinguished if possible and the local fire department called immediately.

If a load of waste is unknowingly a "hot" load and is discharged onto the working face, it will immediately be watered and extinguished by landfill personnel if possible and the local fire department will be called immediately. Equipment and a stockpile of soil shall also be maintained in close proximity to the working face for controlling accidental fires.

The local fire department, which is located approximately 3.0 miles from the Madison County Landfill, will also be contacted and informed of the potential fire hazards at the landfill. Arrangements will be made with the fire department to provide access to the landfill site. They will also be provided with operational information of the facility in case of emergency.

4.4 Hot Load Notification

Madison County shall provide verbal notification to the Solid Waste Division within 24 hours of a fire at the landfill and written notice within 15 days.

5.0 Access and Safety Requirements

5.1 Landfill Access

Access to the site is currently controlled by means of gates. A security check station and weigh scales is located at the landfill entrance to evaluate waste stream and proper disposal. A properly trained and certified attendant will be on duty at all times while it is open for public use to insure compliance with operational requirements. Restroom and maintenance facilities currently in place at the existing building will remain operational. Access roads to the site will be of all weather construction and maintained in good condition.

5.2 Dust Control

Dust generated due to landfill activities will be controlled. Dust will be controlled through the application of water by truck, or other approved dust control products, if necessary. Removal of mud and dirt from the roads will also be a part of the dust control measures. Additionally, the final cover will be vegetated as soon as practical in order to minimize the blowing of dust on-site.

5.3 Signage

Signs providing information on disposal procedures, the hours which the site is open for public use, the permit number, stating that no hazardous or un-permitted waste can be received without written permission, stating that no liquid waste can be received for disposal, and other pertinent information will be posted at the site entrance. Most of these signs are located at the landfill entrance, which currently provides access to the MSW Transfer Station, and also provides access to the CDLF Unit 2. Therefore, additional signage will be located along the access road beyond the access point to the MSW facilities that prohibits MSW waste from being received at the CDLF Facility. Traffic signs and markers shall be provided as necessary to promote an orderly traffic pattern and direct incoming vehicles to the proper dumping area (MSW or C&D). Adequate signage will be located along the access roads to direct vehicles to and from the discharge area and maintain efficient operating conditions. A sign shall be placed in clear view of each incoming waste transporter, which shall read as follows:

> NOTICE: RANDOM WASTE SCREENING IS PRACTICED HERE. WE RESERVE THE RIGHT TO INSPECT ANY LOAD OR PORTION OF A LOAD ARRIVING AT OUR FACILITY. WE WILL REJECT ALL: HAZARDOUS WASTES, PCBs, LIQUIDS AND ANY UNACCEPTABLE WASTE AS DETERMINED BY OUR MANAGEMENT. YOUR PARTICIPATION IN THIS PROGRAM IS NOT OPTIONAL!

5.4 Prohibition on Scavenging

Scavenging of solid waste is prohibited unless approved by the Owner or Operator and the removal is not performed on the working face.

6.0 Erosion and Sedimentation Control Requirements

Proposed erosion/sedimentation control structures include sediment basins, storm drains, and diversion ditches. Sedimentation basins will be checked after periods of significant runoff. Sediment will be removed from the basins to their original dimensions when sediment accumulates to one half of the design depths. The sedimentation basins, embankments, ditches, inlets and outlets will also be inspected for erosion damage. All necessary repairs will be made immediately. Any trash or debris within the riser pipes will be removed.

The first five (5)-year permitting period will require the use of a temporary sediment basin and one (1) permanent basin. The remainder of the CDLF will require construction and operation of a second permanent basin.

Stormwater will be controlled by constructing intermediate benches as necessary on the finished cap. The benches will be constructed so as to maintain a maximum flow length on the cap surface of approximately 120 linear feet. Ditches will be used to transport water from the bench to sediment basins. Ditches will be of adequate size to handle estimated peak runoff at the final-developed condition.

The erosion control structures have been designed and will be maintained to manage the run-off generated by the 24-hour, 25-year storm event and will conform to the requirements of the Sedimentation Pollution Control Law (15A NCAC 4).

Storm drain outlets and diversion ditches will be inspected for damage after each runoff event. Riprap and/or composite liners will be placed in ditches and at pipe outlets to prevent erosion and washouts. Provisions for a vegetative ground cover sufficient to control erosion must be accomplished within fifteen (15) working days or 90 calendar days upon completion of any phase of CDLF development. Temporary grassing will also be utilized as necessary to stabilize temporary slopes that are susceptible to erosion.

Embankment slopes shall be periodically inspected for erosion. The embankment slopes shall be mowed at a frequency sufficient to maintain a good stand of vegetation. The slopes shall be mowed once in any one (1) year period. The embankment slopes shall be refertilized in the second year unless vegetation growth is fully adequate. Any damaged areas will be reseeded, fertilized, and mulched immediately. Seeding, fertilizing and mulching shall be in accordance with the North Carolina Erosion and Sedimentation Control Guidelines.

7.0 Drainage Control and Water Protection Requirements

7.1 Surface Water

Surface water from outside the operational area will be diverted from the waste area by the use of perimeter ditches. The perimeter ditches direct surface water to the sedimentation basins.

7.2 Discharge of Water and Leachate

There shall be no discharge of pollutants from the landfill into waters of the U.S., including wetlands, that violates any requirements of the Clean Water Act, including, but not limited to, the National Pollutant Discharge Elimination Systems (NPDES) requirements, pursuant to Section 402.

There shall be no discharge of a non-point source of pollution into waters of the U.S., including wetlands, that violates any requirement of area-wide or State-wide water quality management plan that has been approved under Section 208 or 219 of the Clean Water Act, as amended.

7.3 Solid Waste Requirements

Solid waste shall never be disposed of in ponded water.

8.0 Record Keeping Requirements

8.1 Record Keeping Requirements

Landfill personnel shall record and retain the following information in an operating record at the landfill, or at an alternate location that has been approved by the Division.

-Inspection of existing facilities,
-Inspection records and waste determination records,
-Location of large quantities of asbestos,
-Training received by landfill personnel,
-Waste amounts received by weight, which includes source or generation,
-Semi-annual monitoring of ground water wells, and
-Any demonstration, certification, finding, monitoring, testing, or other analytical data required by the North Carolina Solid Waste Management Rules (15A NCAC 13B).

8.2 Operating Record

This information shall be collected and documentation of such collection shall be kept in the permanent operating record of the CDLF. The Operating Record, this Operations Plan, and a copy of the approved design drawings and construction drawings will remain at the Madison County Landfill Facility at all times. This information will be readily available for inspection by the Solid Waste Section.

9.0 Spreading and Compacting Requirements

Waste will be placed in the CDLF in lifts of approximately five (5) to ten (10) feet thick, according to the Filling Sequence drawings, as shown in Section 5 of the Permit To Operate submittal package. Following placement of the initial lift, the solid waste will be compacted as densely as possible using compactors and dozers. Waste placement will be in lifts not to exceed 10 feet. In order to increase compaction, waste should be placed from the down gradient to upgradient direction when possible. The working face shall be maintained in as small an area as possible to increase compaction and to reduce the amount of daily cover required. The stormwater cover shall remain on the largest area possible in order to divert the stormwater from the active area of the landfill.

MULCHING AND GRINDING TREATMENT AND PROCESSING

1.0 Purpose of Plan

This operations plan has been developed for the Mulching and Grinding Treatment and Processing Facility (MGT&P) located at the Madison County MSW Landfill in Madison County, North Carolina. This plan has been prepared in accordance with the requirements of the North Carolina Department of Environment and Natural Resources (DENR), Division of Solid Waste Management, Solid Waste Rules (15A NCAC 13B).

The purpose of this plan is to provide the owner and operator with a reference manual that includes necessary information, procedures, and applicable rules for properly operating the Treatment & Processing Facility. All personnel involved with the management or supervision of operations at the facility will be required to review the Operations Plan and to maintain the facility in conformance with applicable requirements. A copy of the Operations Plan will be kept in the vicinity of the Mulching and Grinding Treatment and Processing Facility at all times.

2.0 Facility Location

The Mulching Facility is located at the Madison County Landfill, MSW facility located off of Craig Rudisill Road, S.R. 1134, and is operated by Madison County. The Mulching Facility is located between the new Construction and Demolition (C&D) landfill-Unit 2 and the recently closed MSW landfill.

3.0 Service Area

This Treatment and Processing Facility will provide service for all of Madison County.

4.0 Siting Requirements

The proposed MGT&P facility siting requirements are shown on the attached Figure #1 and are described as follows:

1) The proposed Mulching Facility is not located in the 100-year flood plain.
2) A 50-foot buffer between all property lines and the treatment and processing areas is maintained.
3) Madison County has no zoning requirements for the MGT&P facility property.
4) The site grades are designed to ensure that there will be no standing water in the treatment and processing area and there will be no off-site drainage problems.

5) An all-weather gravel access road to the site will be kept passable at all times.
6) An erosion control permit for the primary site was approved on September 12, 2005.
7) Access to the Mulching Facility is controlled by properly trained employees.
8) The area will be graded to divert runoff to a sediment basin. Both the ditches and the sediment basin can be utilized to control runoff from a potential fire.

5.0 Operations Procedures

5.1 Overview

The Mulching and Grinding Treatment and Processing Facility will consist of an area of approximately 1.2 acres located between the closed MSW landfill cell and the new CDLF-Unit2 cell. The normal operating hours will be in accordance with CDLF Unit 2 operating hours.

5.2 Personnel

The facility is owned and operated by Madison County. CDLF personnel will operate the MGT&P facility based on it's proximity to the CDLF Unit 2. These employees are properly trained in safety procedures and the inspection of incoming wastes. Training material published by the Solid Waste Association of North America (SWANA) is utilized for initial training of on-site personnel and for continuing education. The employees also direct and coordinate the movement of collection vehicles into and out of the Mulching Facility.

5.3 Technical Operational Requirements

The following operational criteria shall be met at the Mulching and Grinding Treatment and Processing Facility:

1) Only clean unpainted untreated wood and brush will be used in the mulching process.
2) Mulched materials will be removed from the site several times a year.
3) Sludges may not be included in mulched materials.
4) Neither hazardous waste nor asbestos containing waste shall be accepted at the mulching facility.
5) Household hazardous waste shall not be accepted at the mulching facility.
6) The Mulching Facility shall not allow uncontrolled public access.

5.4 Traffic Control

Access to the Mulching Facility is controlled by properly trained employees who are located at the entrance of the facility. As vehicles arrive at the Mulching Facility, site personnel will direct the driver to position the vehicle at the correct unloading location. When the contents of the vehicle are emptied, the driver is instructed to move the vehicle away from the Mulching Facility area.

5.5 Housekeeping, Litter, and Vector Control

Incoming wastes will be transported to the Mulching Facility in covered or enclosed vehicles. Outgoing transfer trailers will also be covered or enclosed. Facility personnel will police the area for litter as necessary. Vectors shall be controlled so as to protect the public health and welfare.

5.6 Fire Control

In the event that a fire occurs, the local authorities will be notified immediately. The telephone numbers of local fire, police, ambulance and hospital facilities are posted in and around the facility at all times. In the event of a fire at the facility the DENR will be notified within 24 hours and written notification will be submitted within 15 days.

5.7 Storm Water Management and Erosion Control

An erosion control permit developed for the area where the MGT&P facility C&D Unit 2 will be located was approved by the NCDENR, Land Quality Section on September 12, 2005. Standard erosion control practices, such as a sediment basin, silt fencing, vegetating slopes, and diversion ditches will be utilized at the site.

5.8 Zoning

Madison County has no zoning requirements for the landfill property and thus, no zoning for the MGT&P facility is required.

5.9 Temporary Disaster Debris Staging/Storage Area

The Mulching and Grinding Treatment and Processing Facility (MGT&P) has been designated as the Temporary Disaster Debris Staging/Storage Area for vegetative waste from within Madison County resulting from a significant natural disaster. The waste would be processed in accordance with this Plan or depending on the volume, may be removed for processing and/or disposal at an off-site permitted facility.

HOUSEHOLD HAZARDOUS WASTE COLLECTION FACILITY

1.0 Wastes Received

The household hazardous waste collection facility only receives household hazardous waste (HHW) generated by homeowners and conditionally exempt small quantity generators from within Madison County.

The household hazardous waste collection facility will not accept any radioactive waste, explosives or infectious waste.

2.0 Reporting Requirements

The County shall maintain records on the amount of household hazardous waste received for disposal at the facility and the amounts shipped off site for recycling, reuse, treatment and/or disposal. Records will be compiled on a monthly basis and maintained at the facility for inspection.

On or before August 1st of each calendar year, the County shall report to the Solid Waste Section the amount of household hazardous waste received at the facility and the amounts shipped off site for recycling, reuse, treatment and/or disposal. The reporting period shall be for the previous year, beginning July 1st and ending June 30th.

OTHER SERVICES, COLLECTION FACILITIES AND/OR OPERATIONS

1.0 White Goods/Metals

The Madison County Landfill Facility does accept white goods and other recyclable metal products which are taken to a designated collection facility located south of the closed MSW Landfill. All appliances containing chlorofluorocarbon (CFC) refrigerants are segregated from the other scrap metals. Any refrigerator/freezer equipped with locking doors will have the door(s) removed immediately. County staff periodically removes and recycles the refrigerant from the applicable appliances. Records of this activity are maintained on site. All scrap metal is periodically removed from the site by a recycling contractor.

2.0 Scrap Tires

The Madison County Landfill Facility accepts scrap tires for recycling which are taken to a designated collection facility located adjacent to the maintenance/recycling building. Once the tire trailers are loaded, an authorized tire recycler will remove the trailers for processing.

3.0 Waste Oil, Antifreeze and Used Oil Filters

The Madison County Landfill Facility accepts waste oil, used oil filters and waste antifreeze which are taken to a designated collection facility located between the closed MSW landfill and the active C&D – Unit 2 landfill. Waste oil, used oil filters and antifreeze are periodically collected by an authorized recycler for processing.

4.0 Cooking Oil

The Madison County Landfill Facility accepts used cooking oil at a designated collection facility located in the area of the maintenance/recycling facility building. The used cooking oil is periodically collected by an authorized recycler for further processing.

5.0 Batteries

Waste batteries are collected by the Madison County Landfill Facility at a designated collection facility located at the citizen's disposal facility located near the scale house. The battery collection area is covered to protect the batteries from the weather and prevent runoff from the collection facility.

6.0 Electronics

Madison County intends to begin the collection of scrap electronics in the near future. The intent is to locate the collection facility in the general vicinity of the existing white goods/scrap metal collection area. The County intends to palletize the scrap electronics and store them in covered containers until such time as a full trailer load is accumulated at which time an authorized recycler will collect the items for further processing.

7.0 Underground Leachate Storage Tank

The underground leachate storage tank will be equipped with continuous leak detection and high liquid level monitoring devices. Each alarm condition will be visually indicated by a dedicated indicator which is to remain lit until such time as the alarm condition is corrected. Each alarm condition will also be audibly annunciated via a pulsing horn which can be silenced manually via a horn silence button.

The system console shall be equipped with a "system detecting" indicator light to visually indicate to the operator that the detection systems are operating as intended. The system console will be inspected by the operator at least weekly to confirm system operation. Results of the inspection will be recorded in the underground leachate storage tank inspection monitoring reports

A monitoring access point will be provided to allow the operator to manually check the depth of liquid within the tank from which the volume of stored liquid can be determined based on a tank calibration chart. The volume of liquid within the tank will be checked at least weekly. However, during the initial 6-months following installation of the tank, the volume of stored leachate will be checked more often as necessary in order to establish a general schedule for leachate removal activities. Results of the leachate volume monitoring results will be recorded in the underground leachate storage tank inspection monitoring reports.

Leachate will periodically be removed from the underground storage tank by the County or a licensed wastewater hauler and hauled to and disposed of at the Town of Marshall's wastewater treatment plant. A copy of the letter from the Town of Marshall, agreeing to accept the leachate from the Madison County Solid Waste Facility is included in Appendix C. Results of the leachate removal/hauling operation will be recorded in the underground leachate storage tank inspection monitoring reports.

EXPLOSIVE GAS CONTROL

1.0 Methane Gas Concentration Limits

Madison County must ensure that:

i. The concentration of methane gas generated by the landfill does not exceed 25 percent of the Lower Explosive Limit* (25% LEL) for methane in landfill structures (excluding gas control or recovery system components); and

ii. The concentration of methane gas does not exceed 100 percent of the Lower Explosive Limit (100% LEL) for methane at the landfill property boundary.

2.0 Explosive Gas Monitoring Program

Madison County will routinely monitor for explosive gas to ensure that the standards of 1.0 Methane Gas Concentration Limits are met. See Appendix D for the Explosive Gas Monitoring Procedure plan for the Madison County Landfill, Permit No. 58-03, located at 271 Craig Rudisil Road, Marshall, North Carolina 28753. The minimum frequency of monitoring will be quarterly.

3.0 Methane Gas Response Plan

If methane gas levels exceeding the limits specified in 1.0 Methane Gas Concentration Limits are detected, the owner or operator will:

i. Immediately take all necessary steps to ensure protection of human health, i.e. no smoking, temporarily abandon any affected structure and notify the Division of Solid Waste Management.

ii. Within seven days of detection, place in the operating record the methane gas levels detected and a description of the steps taken to protect human health; and

iii. Within 60 days of detection, prepare and implement a remediation plan for the methane gas releases, place a copy of the plan in the operating record, and notify the NCDENR, Solid Waste Section that the plan has been implemented. The plan will describe the nature and extent of the problem and the proposed remedy.

* - "Lower Explosive Limit" (LEL) means the lowest percent by volume of a mixture of explosive gases in air that will propagate a flame at 25° C and atmospheric pressure.

APPENDIX A

Revised Facility Site Plan

Site Description Maps

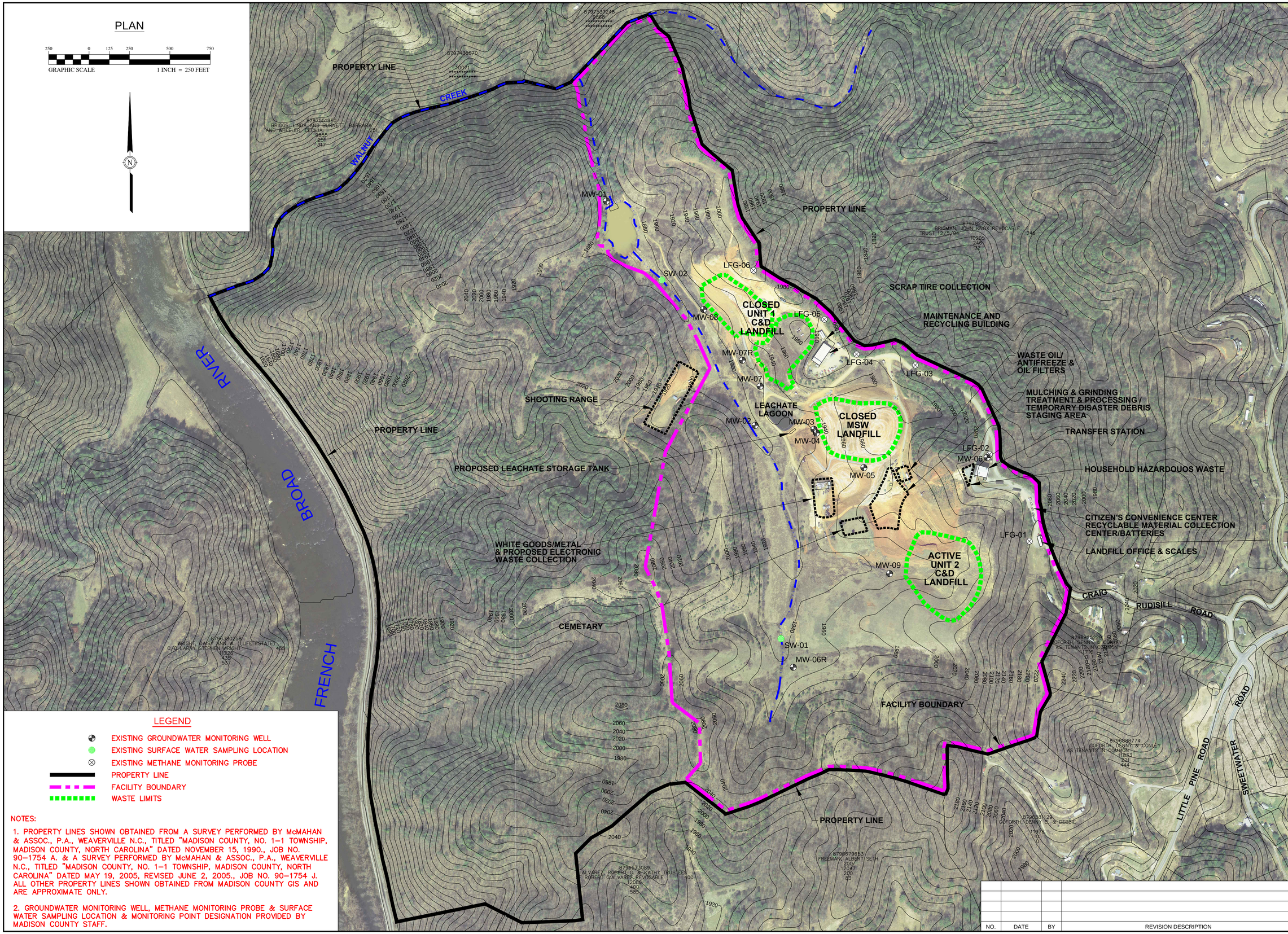

LEGEND

- EXISTING GROUNDWATER MONITORING WELL
- EXISTING SURFACE WATER SAMPLING LOCATION
- EXISTING METHANE MONITORING PROBE
- PROPERTY LINE
- FACILITY BOUNDARY
- WASTE LIMITS

NOTES:

1. PROPERTY LINES SHOWN OBTAINED FROM A SURVEY PERFORMED BY McMAHAN & ASSOC., P.A., WEAVERVILLE N.C., TITLED "MADISON COUNTY, NO. 1–1 TOWNSHIP, MADISON COUNTY, NORTH CAROLINA" DATED NOVEMBER 15, 1990., JOB NO. 90–1754 A. & A SURVEY PERFORMED BY McMAHAN & ASSOC., P.A., WEAVERVILLE N.C., TITLED "MADISON COUNTY, NO. 1–1 TOWNSHIP, MADISON COUNTY, NORTH CAROLINA" DATED MAY 19, 2005, REVISED JUNE 2, 2005., JOB NO. 90–1754 J. ALL OTHER PROPERTY LINES SHOWN OBTAINED FROM MADISON COUNTY GIS AND ARE APPROXIMATE ONLY.

2. GROUNDWATER MONITORING WELL, METHANE MONITORING PROBE & SURFACE WATER SAMPLING LOCATION & MONITORING POINT DESIGNATION PROVIDED BY MADISON COUNTY STAFF.

NO.	DATE	BY	REVISION DESCRIPTION

McGill ASSOCIATES
ENGINEERING·PLANNING·FINANCE
55 BROAD STREET ASHEVILLE, NC 28801 PH. (828) 252-0575

MADISON COUNTY LANDFILL
FACILITY PLAN

MADISON COUNTY

MADISON COUNTY, NORTH CAROLINA

JOB NO.: 09.00729
DATE: FEBRUARY 2010
DESIGNED BY: WHS
CADD BY: KS
DESIGN REVIEW: XXX
CONST. REVIEW: XXX
FILE NAME: 60/0729-C-101-Facility Plan.dwg

FACILITY PLAN

SHEET
C-101

Q:\2009\09.00729\Design\Solid Waste\Drawings\58-03_Facility-Plan_Active-Landfill_Craig-Rudisill-Road\09.00729-C-101-Facility Plan.dwg 8/6/2010 1:38 PM KELLY

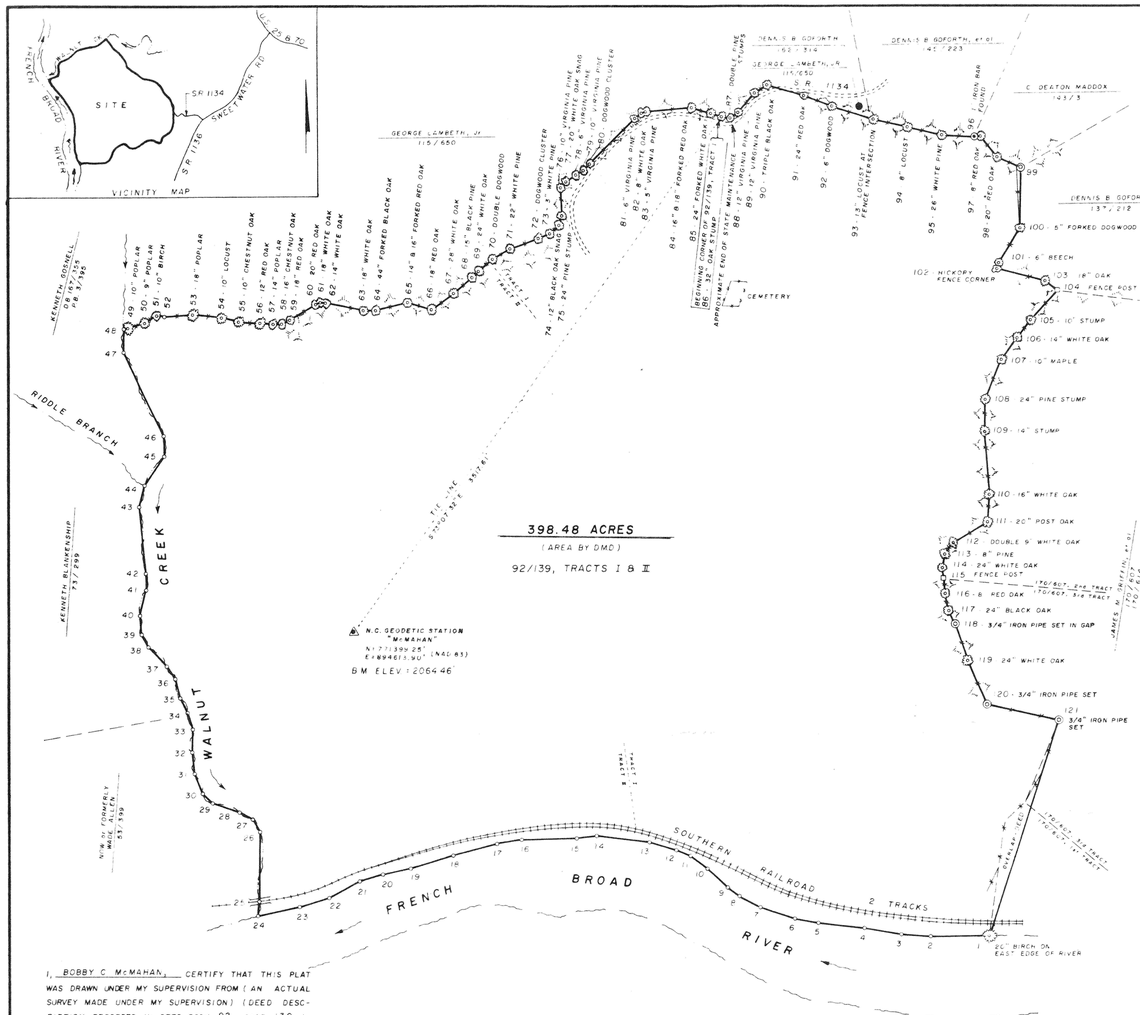

Pt to Pt	BEARING	DISTANCE	Pt to Pt	BEARING	DISTANCE
1- 2	N 19°10'54"W	323.14'	62- 63	S 07°33'35"E	206.24'
2- 3	N 16°11'21"W	161.40'	63- 64	S 21°14'46"E	88.43'
3- 4	N 08°19'32"W	207.18'	64- 65	S 33°09'46"E	187.44'
4- 5	N 12°10'17"W	260.86'	65- 66	S 03°57'18"E	136.44'
5- 6	N 08°25'37"W	136.47'	66- 67	S 15°15'14"E	111.82'
6- 7	N 00°00'00"E	200.00'	67- 68	S 58°58'11"E	136.16'
7- 8	N 08°44'46"E	131.53'	68- 69	S 17°52'34"E	136.16'
8- 9	N 18°26'06"E	79.06'	69- 70	S 69°06'00"E	174.00'
9- 10	N 24°34'17"E	154.35'	70- 71	S 48°55'10"E	172.40'
10- 11	N 17°50'00"E	115.43'	71- 72	S 59°56'10"E	132.40'
11- 12	N 06°42'15"E	85.59'	72- 73	S 27°55'28"E	62.05'
12- 13	N 03°28'06"W	165.30'	73- 74	S 50°38'24"E	78.44'
13- 14	N 09°54'15"W	119.77'	74- 75	N 82°39'15"E	142.45'
14- 15	N 30°04'07"W	109.77'	75- 76	N 74°43'03"E	139.44'
15- 16	N 21°02'15"W	278.57'	76- 77	N 70°44'55"E	43.23'
16- 17	N 29°51'56"W	143.27'	77- 78	S 55°52'27"E	44.04'
17- 18	N 33°21'59"W	245.46'	78- 79	S 45°09'23"E	49.46'
18- 19	N 36°52'12"W	250.00'	79- 80	S 61°31'15"E	49.63'
19- 20	N 30°39'02"W	156.92'	80- 81	S 64°56'15"E	146.63'
20- 21	N 36°01'39"W	136.01'	81- 82	S 52°47'39"E	84.13'
21- 22	N 46°02'50"W	164.49'	82- 83	S 37°26'15"E	49.66'
22- 23	N 36°37'44"W	168.00'	83- 84	S 23°44'15"E	241.66'
23- 24	N 29°24'42"W	241.87'	84- 85	S 41°55'15"E	133.33'
24- 25	N 79°45'21"E	84.34'	85- 86	S 12°55'15"E	63.78'
25- 26	N 71°35'36"E	381.37'	86- 87	S 16°[illegible]'15"E	42.[illegible]
26- 27	N 42°30'38"E	81.39'	87- 88	S 14°[illegible]'15"E	18.[illegible]
27- 28	N 10°00'20"E	86.31'	88- 89	S 11°[illegible]'15"E	8.[illegible]
28- 29	N 00°00'00"E	155.00'	89- 90	S 14°[illegible]'15"E	[illegible]
29- 30	N 26°33'54"E	78.26'	90- 91	[illegible]	[illegible]
30- 31	N 50°31'40"E	117.35'	91- 92	[illegible]	[illegible]
31- 32	N 65°33'22"E	120.83'	92- 93	[illegible]	[illegible]
32- 33	N 71°33'54"E	126.49'	93- 94	[illegible]	[illegible]
33- 34	N 53°44'46"E	93.01'	94- 95	S 67°[illegible]'15"E	42.[illegible]
34- 35	N 47°07'15"E	95.52'	95- 96	S 13°32'10"E	154.[illegible]
35- 36	N 52°55'41"E	107.00'	96- 97	S 12°47'[illegible]"E	68.42'
36- 37	N 36°52'15"E	73.00'	97- 98	S 31°44'15"W	167.95'
37- 38	N 28°52'13"E	149.65'	98- 99	S 06°46'52"W	135.33'
38- 39	N 42°30'38"E	81.39'	99-100	S 09°26'36"W	323.79'
39- 40	N 67°06'56"E	103.08'	100-101	N 77°35'29"W	243.14'
40- 41	N 84°05'38"E	145.77'	101-102	S 88°39'10"W	79.37'
41- 42	N 70°35'36"E	90.14'	102-103	S 09°35'55"E	279.94'
42- 43	N 66°11'39"E	371.62'	103-104	S 17°57'56"W	77.95'
43- 44	N 82°[illegible]'15"E	122.76'	104-105	N 67°09'33"W	284.[illegible]
44- 45	S 79°34'04"E	194.05'	105-106	N 69°36'24"W	[illegible]
45- 46	N 70°41'09"E	111.56'	106-107	N 75°35'[illegible]"W	14.[illegible]
46- 47	N 45°50'18"E	514.39'	107-108	N 84°25'21"W	24.[illegible]
47- 48	N 71°28'05"E	128.03'	108-109	S 77°14'22"W	[illegible]
48- 49	S 35°53'05"E	24.94'	109-110	S 66°30'42"W	[illegible]
49- 50	S 35°53'05"E	96.61'	110-111	S 77°06'32"W	[illegible]
50- 51	S 47°22'39"E	74.62'	111-112	N 49°58'47"W	221.85'
51- 52	S 12°41'44"E	41.02'	112-113	N 72°08'37"W	74.40'
52- 53	S 23°18'51"E	118.61'	113-114	[illegible]	[illegible]
53- 54	S 13°40'01"E	158.97'	114-115	[illegible]	41.[illegible]
54- 55	S 03°32'40"E	94.58'	115-116	[illegible]	86.[illegible]
55- 56	S 14°45'55"E	123.50'	116-117	[illegible]	99.[illegible]
56- 57	S 13°06'42"E	71.06'	117-118	[illegible]	79.[illegible]
57- 58	S 21°06'32"E	73.55'	118-119	S 64°39'05"W	274.[illegible]
58- 59	S 47°46'[illegible]"E	35.30'	119-120	S 46°46'02"W	254.[illegible]
59- 60	[illegible]	160.42'	120-121	S 06°52'15"E	432.[illegible]
60- 61	[illegible]	26.65'	121- 1	S 80°42'15"E	1255.[illegible]
61- 62	[illegible]	49.57'			

NOTE: ALL CORNERS AT EDGE OF FRENCH BROAD RIVER AND CENTERLINE OF WALNUT CREEK ARE UNMARKED CORNERS (EXCEPT BIRCH ON EAST EDGE OF RIVER).

I, BOBBY C. McMAHAN, CERTIFY THAT THIS PLAT WAS DRAWN UNDER MY SUPERVISION FROM (AN ACTUAL SURVEY MADE UNDER MY SUPERVISION) (DEED DESCRIPTION RECORDED IN DEED BOOK 92, PAGE 139); THAT THE BOUNDARIES NOT SURVEYED ARE SHOWN AS BROKEN LINES PLOTTED FROM INFORMATION FOUND IN DEED BOOK ____, PAGE ____; THAT THE RATIO OF PRECISION AS CALCULATED BY LATITUDES AND DEPARTURES DOES EXCEED ONE PART IN 5,000; THAT THIS PLAT WAS PREPARED IN ACCORDANCE WITH G.S. 47-30 AS AMENDED.
WITNESS MY ORIGINAL SIGNATURE, REGISTRATION NUMBER, AND SEAL THIS 15th DAY OF NOVEMBER, 1990.

SURVEYOR: Bobby C. McMahan
REGISTRATION NO.: 2475

NORTH CAROLINA PROFESSIONAL SEAL 2475 LAND SURVEYOR BOBBY C. McMAHAN

I, EDITH H. McMAHAN, A NOTARY PUBLIC IN AND FOR THE COUNTY OF BUNCOMBE, STATE OF NORTH CAROLINA, DO HEREBY CERTIFY THAT BOBBY C. McMAHAN, A REGISTERED LAND SURVEYOR, PERSONALLY APPEARED BEFORE ME THIS DAY AND ACKNOWLEDGED THE DUE EXECUTION OF THE FOREGOING INSTRUMENT.

THIS THE 15th DAY OF NOVEMBER, 1990.

NOTARY PUBLIC

MY COMMISSION EXPIRES: APRIL 1, 1995

STATE OF NORTH CAROLINA, COUNTY OF MADISON
THE FOREGOING CERTIFICATE OF EDITH H. McMAHAN, A NOTARY PUBLIC OF THE STATE AND COUNTY DESIGNATED IS CERTIFIED TO BE CORRECT. THIS ____ DAY OF ____ 19 90.

REGISTER OF DEEDS MADISON COUNTY

BY ____ DEPUTY

FILED FOR REGISTRATION ON THE ____ DAY OF ____, 1990
AT ____ O'CLOCK ____ M, AND RECORDED IN ____

REGISTER OF DEEDS MADISON COUNTY

BY ____ DEPUTY

LEGEND
- 3/4" IRON PIPE SET
- 1" IRON BAR FOUND
- TREE
- UNMARKED CORNER
- FENCE
- TOP OF RIDGE

SURVEY FOR

MADISON COUNTY

NO. 1-1 TOWNSHIP
MADISON COUNTY
NORTH CAROLINA

400 0 400 800 1600
SCALE: 1" = 400'
DATE: NOV. 15, 1990
REVISED: ____

McMAHAN & ASSOC., P.A.
P.O. BOX 1296
WEAVERVILLE, N.C. 28787
704-645-5554

JOB NO. 90-7[illegible]

DUNCAN-PARNELL, INC. CHARLOTTE 1986 800-432-9022

REV. DEC. 18, 1991.

LAW ENVIRONMENTAL
CHARLOTTE, NORTH CAROLINA

PROPOSED SANITARY LANDFILL
MADISON COUNTY, NORTH CAROLINA

SITE DESCRIPTION MAP
LANDFILL SITE

JOB NO.	56-8550	FIGURE	2

PLAT BOOK ____, PAGE _____

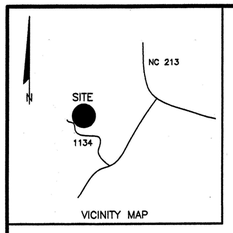

VICINITY MAP

LINE	BEARING	DISTANCE
L1	S 12°45'07" E	25.42'
L2	N 02°05'44" W	21.32'
L3	S 26°51'19" E	24.97'
L4	S 35°24'47" E	47.77'
L5	S 47°37'02" E	15.51'
L6	S 15°32'19" E	35.24'

LEGEND

- 3/4" IRON PIPE (FOUND)
- TREE (SPECIES AND DIAMETER AS NOTED)
- 5/8" REBAR WITH I.D. CAP (SET)
- UNMARKED POINT
- UTILITY POLE WITH OVERHEAD LINES
- FENCE
- RIDGE

TRUE NORTH BY SOLAR OBSERVATION

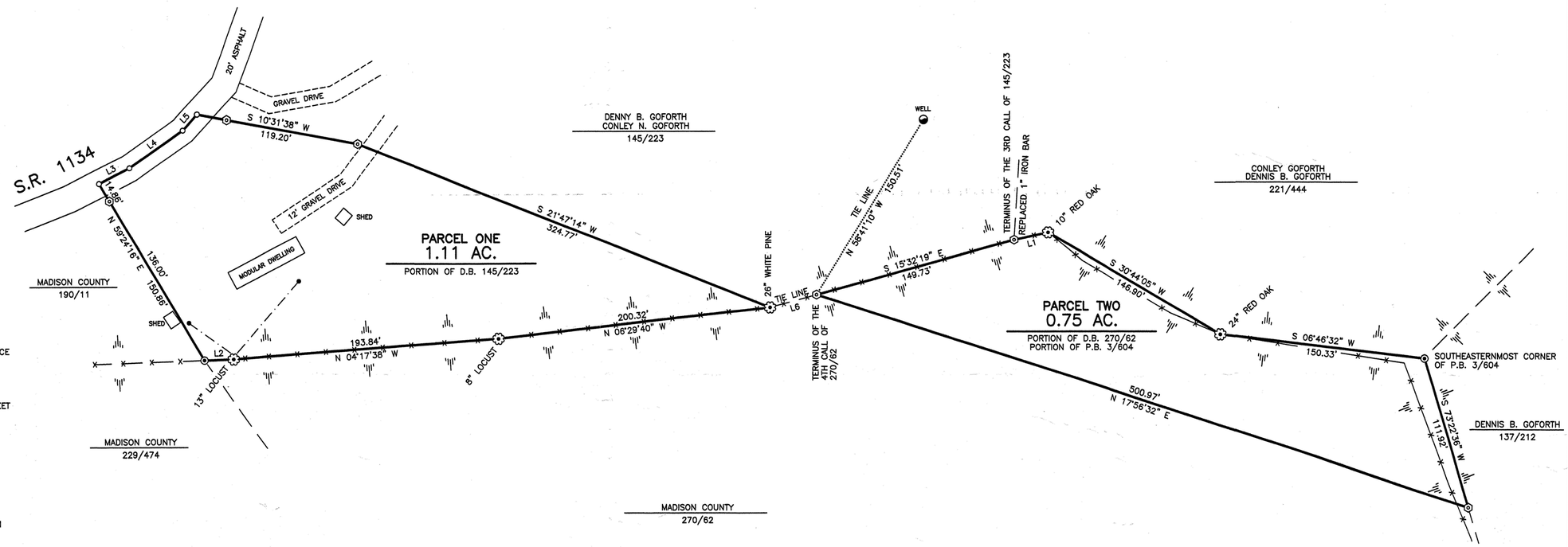

I HEREBY CERTIFY TO ONE OF THE FOLLOWING:

a. ☒ THAT THE SURVEY CREATES A SUBDIVISION OF LAND WITHIN THE AREA OF A COUNTY OR MUNICIPALITY THAT HAS AN ORDINANCE THAT REGULATES PARCELS OF LAND;

b. ☐ THAT THE SURVEY IS LOCATED IN A PORTION OF A COUNTY OR MUNICIPALITY THAT IS UNREGULATED AS TO AN ORDINANCE THAT REGULATES PARCELS OF LAND;

c. ☐ ANY OF THE FOLLOWING:
1. THAT THE SURVEY IS OF AN EXISTING PARCEL OR PARCELS OF LAND AND DOES NOT CREATE A NEW STREET OR CHANGE AN EXISTING STREET;
2. THAT THE SURVEY IS OF AN EXISTING BUILDING OR OTHER STRUCTURE, OR NATURAL FEATURE, SUCH AS A WATERCOURSE; OR
3. THAT THE SURVEY IS A CONTROL SURVEY.

d. ☐ THAT THE SURVEY IS OF ANOTHER CATEGORY, SUCH AS THE RECOMBINATION OF EXISTING PARCELS, A COURT-ORDERED SURVEY, OR OTHER EXCEPTION TO THE DEFINITION OF SUBDIVISION;

e. ☐ THAT THE INFORMATION AVAILABLE TO THE SURVEYOR IS SUCH THAT THE SURVEYOR IS UNABLE TO MAKE A DETERMINATION TO THE BEST OF THE SURVEYOR'S PROFESSIONAL ABILITY AS TO THE PROVISIONS CONTAINED IN (a) THROUGH (d) ABOVE.

NORTH CAROLINA PROFESSIONAL SEAL L-2475 LAND SURVEYOR BOBBY C. McMAHAN

I, BOBBY C. McMAHAN CERTIFY THAT THIS PLAT WAS DRAWN UNDER MY DIRECT SUPERVISION FROM AN ACTUAL SURVEY MADE UNDER MY SUPERVISION, DEED DESCRIPTION RECORDED IN DEED BOOK SEE PAGE PLAT, PLAT BOOK --, PAGE --; THAT THE BOUNDARIES NOT SURVEYED ARE CLEARLY INDICATED AS DRAWN FROM INFORMATION IN DEED BOOK --, PAGE --; THAT THE RATIO OF PRECISION AS CALCULATED IS 1: 10,000; THAT THIS PLAT WAS PREPARED IN ACCORDANCE WITH G.S. 47-30 AS AMENDED.
WITNESS MY ORIGINAL SIGNATURE, REGISTRATION NUMBER AND SEAL THIS 2ND DAY OF JUNE, A.D., 20 05.

SURVEYOR: Bobby C. McMahan
REGISTRATION NUMBER: 2475

FILED FOR REGISTRATION ON THE ____ DAY OF _____, 200__
AT ___ O'CLOCK ___.M., AND RECORDED IN _____

REGISTER OF DEEDS MADISON COUNTY

BY _____ DEPUTY

_____
MADISON COUNTY ZONING OFFICER

I, _____, REVIEW OFFICER OF MADISON COUNTY, CERTIFY THAT THE MAP OR PLAT TO WHICH THIS CERTIFICATION IS AFFIXED MEETS ALL STATUTORY REQUIREMENTS FOR RECORDING.

DATE: _____

_____
REVIEW OFFICER

SURVEY FOR

MADISON COUNTY

NO. 1-1 TOWNSHIP
MADISON COUNTY
NORTH CAROLINA

0' 50' 100' 150' 200'

SCALE : 1" = 50'

DATE : MAY 19, 2005
REVISED : JUNE 2, 2005

McMAHAN & ASSOCIATES, P.A.
P.O. BOX 1296
WEAVERVILLE, N.C. 28787
828-645-5554
FAX: 828-645-3041

JOB NO. 90-1754 J
E:\R14DWGS\1754J.DWG

APPENDIX B

Underground Leachate Storage Tank

Appendix B
Underground Leachate Storage Tank

Narrative

Introduction

Madison County has evaluated the option of continuing to operate the existing leachate lagoon versus constructing/installing an alternative method to manage the onsite collection of leachate from the Closed MSW Landfill. Since the MSW Landfill has been closed, the leachate flows from the facility have continued to diminish to the point that continued operation of the leachate lagoon is no longer feasible. Daily leachate flows from the Closed MSW Landfill have been determined to be approximately fifty to seventy-five (50-75) gallons per day or a maximum of approximately 2,250 gallons per month. Additional liquid accumulating in the existing leachate lagoon, that must be removed and treated by the County, is due to precipitation falling in the exposed lagoon area. To minimize the amount of leachate that must be removed and treated, the County proposes to install an underground leachate storage tank and remove the existing leachate lagoon from service. The proposed tank would be a double-wall fiberglass reinforced tank with an interstitial space between the primary and secondary walls to allow for the monitoring of potentially leaked product from the primary tank structure. The tank will be equipped with a continuous leak detection device as well as a high level alarm with both monitoring devices having visual and audible alarm systems. The tank would be equipped with an access monitoring port for manually measuring the depth/volume of accumulated leachate. Leachate will be periodically removed from the underground tank by the County or a licensed wastewater hauler and hauled to and disposed of at the Town of Marshall's wastewater treatment plant. A copy of the letter from the Town of Marshall, agreeing to accept the leachate from the Madison County Solid Waste Facility is included in Appendix C.

Construction Procedures

The proposed tank will be located between the existing leachate lagoon and the stormwater management basin west of the Closed MSW Landfill as shown on Sheet C-101, titled "Site Plan" included in Enclosure "A". The initial step will be to field verify the grades of the existing leachate collection line at the proposed connection point approximately 40-feet down gradient from the existing intermediate manhole/valve vault. Based on the elevation at this point, the proposed elevation of the tank will be confirmed such that: 1) the bottom elevation of the tank will be a minimum of two feet above the seasonal high groundwater table and a minimum of two feet vertical separation shall be maintained between bedrock and the lowest point of the tank and 2) an adequate slope of no less than 2% can be maintained on the proposed leachate collection line running to the tank from the connection point with the existing leachate collection line. Based on available data and field surveys, the bottom elevation of the tank is proposed to be approximately 1908. The groundwater elevation at the location of the tank has been estimated to be approximately 1903.6 based on the interpolation of groundwater elevation data collected during the fall 2010 scheduled groundwater monitoring event. Based on the aforementioned information, the bottom elevation of the tank should be in excess of four vertical feet above the

groundwater elevation. Section A-A of the Tank Detail as shown on Sheet C-501, Miscellaneous Details, Madison County Landfill, Leachate Collection System Modifications, revised 12-13-10, included in Enclosure "A" of Appendix B, Underground Leachate Storage Tank, provides a graphical depiction of the proposed tank elevation relative to the interpolated groundwater elevation at that location. The existing vertical separation between the proposed bottom elevation of the tank and the groundwater elevation at the site should allow for necessary field adjustments of the tank elevation to ensure a minimum of 2% slope on the leachate collection lines while still maintaining the required two-foot separation between the bottom of the tank and the groundwater. Bedrock is not anticipated to be an issue at this proposed underground storage tank location.

The tank will be installed in accordance with the particular manufacturer's installation instructions. A Technical Specification for the proposed double-wall fiberglass tank and integral monitoring devices is included in Enclosure "B" for reference. Once the underground leachate collection tank and all appurtenances have been installed and checked for proper operation, the leachate collection line will be installed to a point near the tie-in with the existing leachate collection line. A detail of the underground storage tank installation as well as all appurtenances is shown on Sheet C-501 titled "Miscellaneous Details" included in Enclosure A. At that point, the existing valve in the manhole/valve vault will be shut and any leachate within the line will be allowed to drain to the existing leachate lagoon. Once the line is free of visible flow the existing leachate line will be cut and the connection to the proposed leachate collection line to the tank will be constructed. A detail of the proposed connection to the existing leachate collection line is shown on Sheet C-501 titled "Miscellaneous Details" included in Enclosure "A". Care will be taken to ensure that no residual liquid will be discharged to the surrounding soil material. Once the connection is complete, the existing valve will be opened and the liquid allowed to flow to the underground leachate collection tank.

Once the underground leachate storage tank is in operation, the remaining leachate collection line and the existing leachate lagoon will be removed from service. The leachate collection line will be removed from the tie-in point with the new leachate collection line to the discharge point in the existing lagoon. The removed pipe will be disposed of in accordance with applicable Federal and State requirements. All liquid waste and waste residues will be removed from the existing leachate lagoon impoundment by the County or a licensed hauler and hauled to and disposed of at the Town of Marshall's wastewater treatment plant. A copy of the letter from the Town of Marshall, agreeing to accept the leachate from the Madison County Solid Waste Facility is included in Appendix C. The daily volume of leachate removed from the existing leachate lagoon during the draw down prior to removal of the system components will be coordinated with the Town of Marshall. Once all liquid and waste residues have been removed, the system components (liners, etc.) will be removed from the impoundment and disposed of in accordance with applicable Federal and State requirements. Soils immediately below the impoundment's system components will be tested to ensure the soils have not become contaminated. Once testing is complete and the results confirmed, the impoundment will be backfilled with soil and graded to match the surrounding topography as shown on Sheet C-101 titled "Site Plan" included in Enclosure "A". If the soils below the system components have become contaminated, the Solid Waste Section will be notified and corrective actions undertaken to remediate any contaminated areas prior to backfilling with soil material.

Operations

The underground leachate storage tank will be equipped with continuous leak detection and high liquid level monitoring devices. Each alarm condition will be visually indicated by a dedicated indicator which is to remain lit until such time as the alarm condition is corrected. Each alarm condition will also be audibly annunciated via a pulsing horn which can be silenced manually via a horn silence button.

The system console shall be equipped with a "system detecting" indicator light to visually indicate to the operator that the detection systems are operating as intended. The system console will be inspected by the operator at least weekly to confirm system operation. Results of the inspection will be recorded in the underground leachate storage tank inspection monitoring reports

A monitoring access point will be provided to allow the operator to manually check the depth of liquid within the tank from which the volume of stored liquid can be determined based on a tank calibration chart. The volume of liquid within the tank will be checked at least weekly. However, during the initial 6-months following installation of the tank, the volume of stored leachate will be checked more often as necessary in order to establish a general schedule for leachate removal activities. Results of the leachate volume monitoring results will be recorded in the underground leachate storage tank inspection monitoring reports.

Leachate will periodically be removed from the underground storage tank by the County or a licensed wastewater hauler and hauled to and disposed of at the Town of Marshall's wastewater treatment plant. A copy of the letter from the Town of Marshall, agreeing to accept the leachate from the Madison County Solid Waste Facility is included in Appendix C. Results of the leachate removal/hauling operation will be recorded in the underground leachate storage tank inspection monitoring reports.

ENCLOSURE "A"

Sheet C-101, Site Plan

Sheet C-501, Miscellaneous Details, Revised 12-13-10

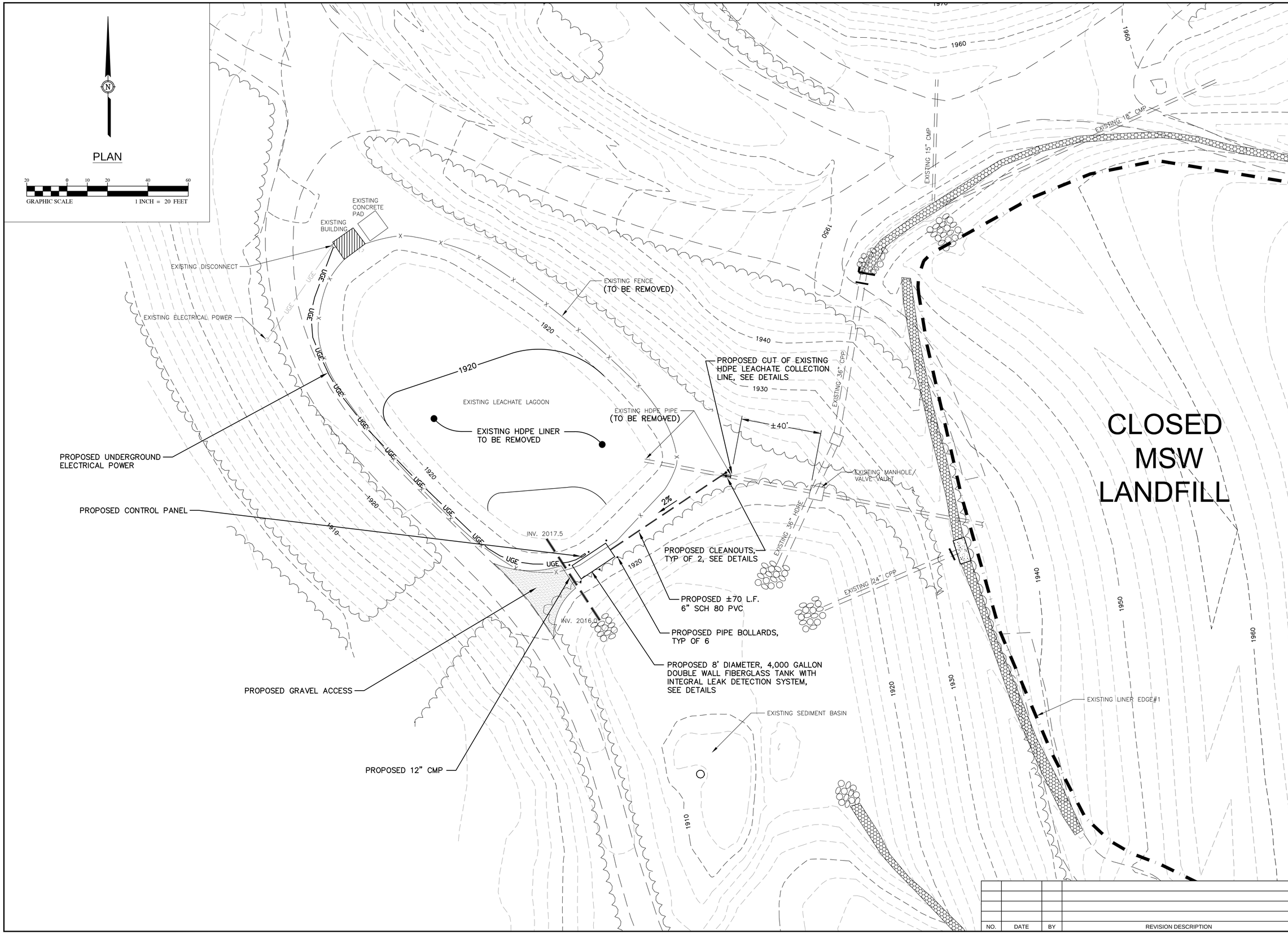

NO.	DATE	BY	REVISION DESCRIPTION

McGill ASSOCIATES
ENGINEERING·PLANNING·FINANCE
55 BROAD STREET ASHEVILLE, NC 28801 PH: (828) 252-0575 FIRM LICENSE # C-0459

MADISON COUNTY LANDFILL
LEACHATE COLLECTION SYSTEM MODIFICATION
MADISON COUNTY
MADISON COUNTY, NORTH CAROLINA

JOB NO.: 09.00729
DATE: JULY, 2010
DESIGNED BY: WHS
CADD BY: KS
DESIGN REVIEW: ____
CONST. REVIEW: ____
FILE NAME: 09.00729-C-101-Site Plan.dwg

SITE PLAN

SHEET
C-101

Q:\2009\09.00729\Design\Solid Waste\Drawings\Leachate Collection System Modification\09.00729-C-101-Site Plan.dwg 8/6/2010 1:45 PM KELLY

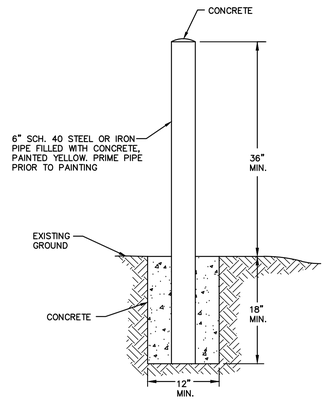

BOLLARD DETAIL

REVISION DATE - NOVEMBER 3, 2008

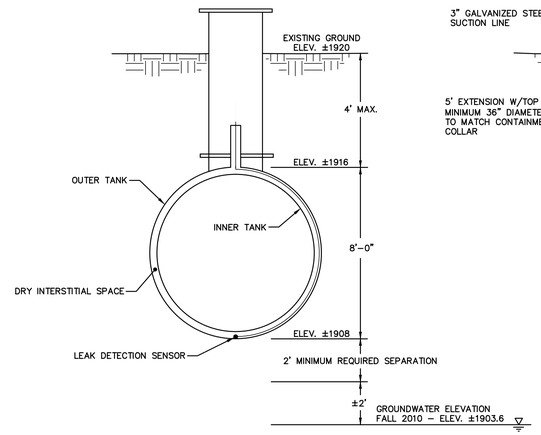

SECTION A–A

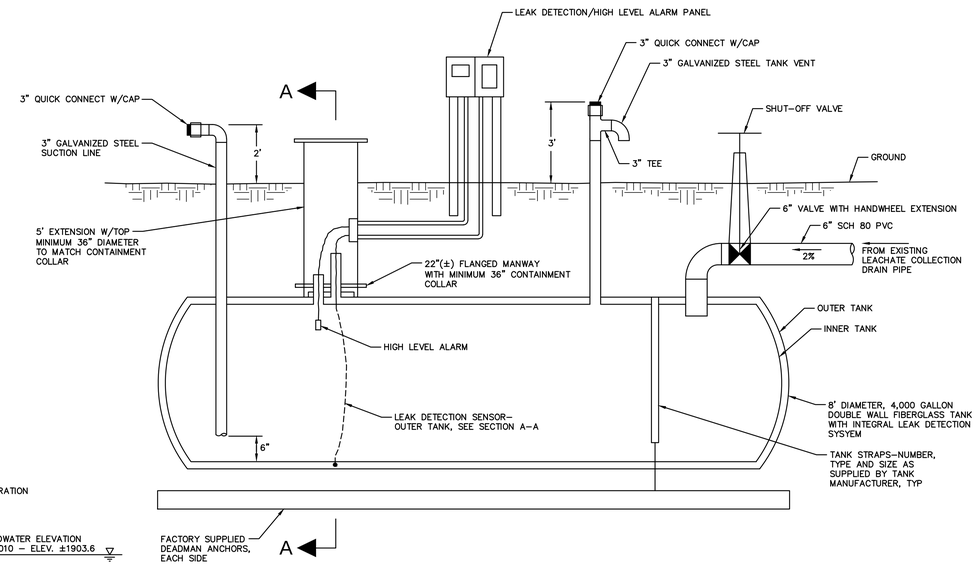

ELEVATION VIEW

NOTE:
ESTIMATED GROUNDWATER ELEVATION AT THE PROPOSED TANK LOCATION (±1903.6) BASED ON INTERPOLATED GROUNDWATER CONTOURS BETWEEN MW–3(1908.76), MW–4(1907.03) AND MW–2 (1894.24) FOR FALL 2010 GROUNDWATER MONITORING EVENT. GROUNDWATER ELEVATIONS WERE PROVIDED BY ALTAMONT ENVIRONMENTAL, INC.

TANK DETAIL

NTS

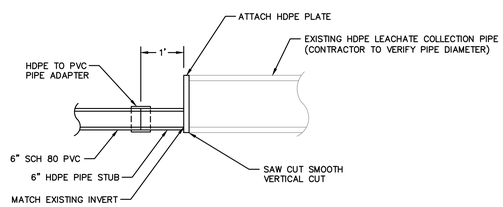

EXISTING LEACHATE COLLECTION DRAIN CAP

NTS

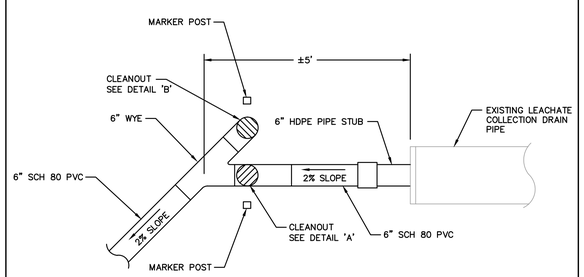

CLEANOUT PLAN

NTS

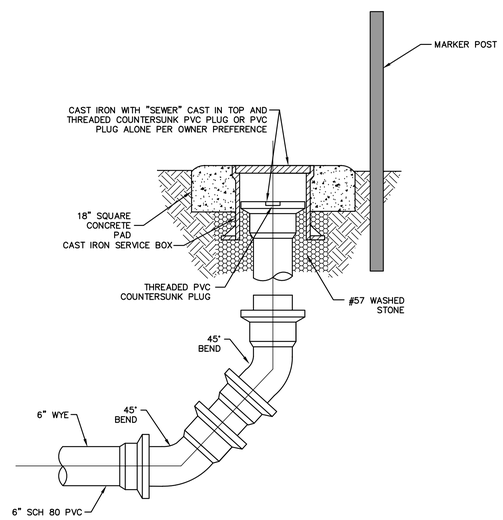

CLEANOUT DETAIL 'B'

NTS

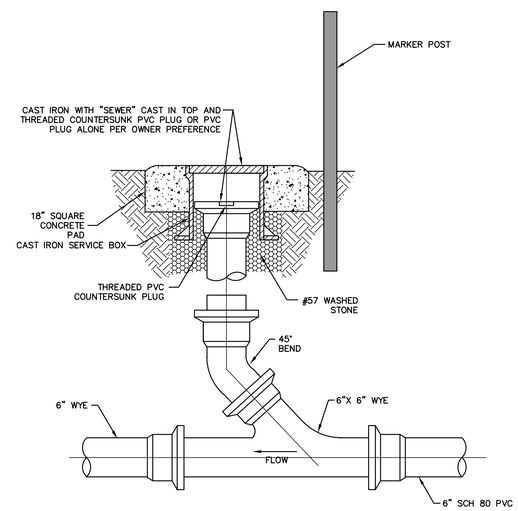

CLEANOUT DETAIL 'A'

NTS

NO.	DATE	BY	REVISION DESCRIPTION
1	12-13-10	KS	REVISED PER NCDENR COMMENTS

McGill ASSOCIATES
ENGINEERING·PLANNING·FINANCE
55 BROAD STREET ASHEVILLE, NC 28801 PH. (828) 252-0575 FIRM LICENSE # C-0459

NORTH CAROLINA PROFESSIONAL SEAL 13642 WILLIAM H. STOWE

MADISON COUNTY LANDFILL
LEACHATE COLLECTION SYSTEM MODIFICATION
MADISON COUNTY
MADISON COUNTY, NORTH CAROLINA

JOB NO.: 09.00729
DATE: JULY, 2010
DESIGNED BY: WHS
CADD BY: KS
DESIGN REVIEW: ____
CONST. REVIEW: ____
FILE NAME: 09.00729-C-501-Miscellaneous Details.dwg

MISCELLANEOUS DETAILS

SHEET
C-501

Q:\2009\09.00729\Design\Solid Waste\Drawings\Leachate Collection System Modification\09.00729-C-501-Miscellaneous Details.dwg 12/14/2010 10:44 AM KELLY

ENCLOSURE "B"

Technical Specification

PART I: GENERAL

1.01 Scope of Work

A. This section covers the furnishing of all labor, supervision, equipment and materials necessary to furnish and install, complete and ready to use, the Double-Wall Fiberglass Reinforced Tank(s) including all appurtenances, excavation, foundation preparation, tank setting, backfilling, compaction and all necessary and incidental items required to complete the Work, all in accordance with the Contract Drawings and these Contract Specifications.

1.02 Quality Assurance

A. Tank manufacturer shall have verifiable experience in the manufacture of Double-Wall Fiberglass Reinforced Tanks.

B. Governing Standards, as applicable:

Tank manufacturer shall be in the business of manufacturing tanks to Underwriters Laboratories (UL) Standard 1316.

PART II: PRODUCTS

2.01 Double-Wall Fiberglass Reinforced (FR) Underground Storage Tanks

A. Loading Conditions – Tank shall meet the following design criteria:

1. Internal Load – Tank shall withstand a 5-psig air-pressure test with 5:1 safety factor. Contractor shall individually test tanks for leakage prior to installation. Maximum test pressure is 5 psig.
2. Vacuum Test – To verify structural integrity, every standard 10'-diameter tank and smaller shall be vacuum tested by the manufacturer at the factory to 11.5" of mercury.
3. Surface Loads – Tank shall withstand surface H-20 axle loads when properly installed according to manufacturer's current Installation Manual and Operating Guidelines.
4. External Hydrostatic Pressure and Burial Depth – Tank shall be capable of being buried in ground with 7' of overburden over the top of the tank, the hole fully flooded and a safety factor of 5:1 against general buckling.

5. Tank shall support accessory equipment – such as drop tubes, submersible pumps and ladders – when installed according to the tank manufacturer's current Installation Manual and Operating Guidelines.

B. Product Storage

1. Tank shall be capable of storing leachate or chemicals with specific gravity up to 1.1.
2. Tank shall be vented to atmospheric pressure.
3. Tank shall be capable of storing products identified in the manufacturer's current standard limited warranty.

C. Materials

1. Tank shall be manufactured with 100% resin and glass-fiber reinforcement. No sand fillers.
2. Premium resin shall be used in fabricating the inner surface of all landfill leachate and chemical tanks.

D. Tank Dimensions

1. Tank shall have nominal capacity of 4,000 gallons.
2. Tank shall have nominal outside diameter of six (6) to eight (8) feet.

E. Service Conditions and Requirements

1. When applicable, an Underground Tank (UT) Application form, which shall include the composition of landfill leachate to be collected in the tank, shall be completed and submitted to the manufacturer for approval prior to tank manufacture.
2. Approval for each application of the tank, any limitations on use and any design considerations shall be provided by the manufacturer.
3. When approved, the completed form shall be returned to the customer and becomes a part of the Limited Warranty for the tank.

F. Interstitial Space

1. Tank shall have a space between the primary and secondary walls to allow for the free flow and containment of leaked product from the primary tank. The monitoring space shall provide equal communication in all directions. The space shall also allow the insertion of a monitoring device through a monitoring fitting.

2.02 Accessories

A. Leak Monitoring and Overfill Detection System

Provide a continuous leak and overfill detection system utilizing electro-optic technology or other approved monitoring systems.

1. Alarm Controller

   Alarm console to be NEMA 4X with remote sensor test capability at console utilizing test button. When pressed the test button will test entire system electronic from control panel to sensors. Console to be UL listed to provide intrinsically safe output circuits to electro-optic sensors in Class I, Group D hazardous locations. Console to be OMNTEC Mfg., Inc., Model ELP21LU-series or equal. Console must monitor both interstitial space and high level in tank for presence of liquid. Each alarm condition to be visually indicated by a dedicated red L.E.D. indicator which is to remain lit until alarm condition is corrected. Each alarm condition to also be audibly annunciated via a 95-decibel piezoelectric pulsing horn which can be silenced via the horn silence button. Console shall also provide a green "system detecting" indicator. Each alarm to have N.O. dry contacts for control purposed, as well as low voltage outputs for optional NEMA 4X RA-series remote audio/visual alarm panel.

2. Interstitial Sensor

   Interstitial sensor to be OMNTEC Model LWF (for dry fiberglass interstitial) or equal. Sensor(s) to be self diagnostic with dry condition creating a normally closed light beam and an alarm condition opening (refracting) the normally closed light beam. Sensor(s) and console to be UL listed and third party tested as a system.

3. High Level Sensor

   High level sensor to be OMNTEC L-1 series, or equal, and be of proper length to alarm at 90% of tank capacity. Sensor(s) to be self diagnostic with dry condition creating a normally closed light beam and an alarm condition opening (refracting) the normally closed light beam. Sensor(s) and console to be UL listed and third party tested as a system.

B. Anchor Straps

1. Straps shall be compatible anchor straps as supplied by tank manufacturer.
2. Number and location of straps shall be as specified by the tank manufacturer.
3. Each strap shall be capable of withstanding a maximum load of 25,000 pounds.

C. Prefabricated Concrete Deadman Anchors

1. Deadman shall be as supplied by the tank manufacturer.
2. Number, length and weight shall be as specified by the tank manufacturer.
3. Deadman shall provide adjustable anchor points for the anchor straps.

D. Manways

1. All tanks for leachate use shall require at least one manway.
2. All manways shall be flanged and of the diameter as shown on the plans, complete with UL-listed cover, gasket and hardware.
3. Location is shown on tank drawings.
4. Manway extensions, as shown on the plans, shall be of the same material as the tank as supplied by the tank manufacturer.

E. Gauge Plates

1. Gauge plates shall be installed under each service fitting and manway opening.

F. Ladders (optional as shown on the Plans)

1. Ladders shall be the standard ladder as supplied by tank manufacturer.
2. Ladder material (fiberglass or aluminum) shall be shown on tank drawings.

G. Internal Pump Platform (Optional as shown on the Plans)

1. Contact tank manufacturer with pump details.

H. Fittings

1. All fittings shall be located along the top centerline of the tank. Bottom drain and tangential nozzles are not allowed.
2. All standard NPT threaded fittings shall be constructed of carbon steel.

3. All standard NPT threaded fittings shall be half-couplings, and 2"-, 4"- or 6"-diameter. Reducers are to be used for smaller sizes where shown and provided by contractor.
4. All NPT fittings shall withstand a minimum of 150 foot-pounds of torque and 1,000 foot-pounds of bending, both with a 2:1 safety factor.
5. All optional FRP nozzles shall be flat-faced, flanged and gusseted, and are available in 2"-, 4"-, 6"- or 8"-diameter.
6. All optional FRP nozzles shall conform to ANSI B16.5 150# bolting pattern.
7. Each interstitial-space monitor fitting shall consist of a 2" NPT fitting on the secondary tank.

PART III: SUBMITTALS

A. Submit manufacturer's product data; certificates of compliance on materials utilized during construction and on materials furnished; and brochures/manuals containing complete information and instructions pertaining to storage, handling, installation, wiring, inspection, repair and testing for each product/material furnished. Submittal information shall include applicable warranties.

B. Contractor/Tank Installer shall submit copies of qualifications/certifications relative to the installation of Fiberglass Reinforced Underground Storage Tanks and ancillary equipment.

PART IV: INSTALLATION AND TESTING

4.01 Installation

A. The Fiberglass Reinforced Underground Storage Tank and all accessories shall be installed in accordance with the manufacturer's installation Manual and Operating Guidelines for Double-Wall Fiberglass Underground Storage Tanks in effect at time of installation.

B. Contractor/Tank Installer shall be qualified in the installation of Double-Wall Fiberglass Reinforced Underground Storage Tanks.

C. Leak Monitoring and Overfill Detection Systems and all accessories shall be installed in accordance with the manufacturer's Installation Manual and Operating Guidelines for Leak Monitoring and Overfill Detection Systems in effect at time of installation.

4.02 Testing

A. Tank shall be tested in accordance with the manufacturer's Installation Manual and Operating Guidelines for Double-Wall Fiberglass Reinforced Underground Storage Tanks in effect at time of installation.

B. Leak Monitoring and Overfill Detection System shall be tested in accordance with the manufacturer's Installation Manual and Operating Guidelines for Leak Monitoring and Overfill Detection Systems in effect at time of installation.

C. Testing results shall be submitted to the Owner.

PART V: WARRANTY

5.01 Warranty

A. Warranty shall be manufacturer's limited warranty for Double-Wall Fiberglass Reinforced Underground Storage Tanks in effect at time of purchase.

B. Warranty shall be manufacturer's limited warranty for the Leak Monitoring and Overfill Detection System in effect at time of purchase.

END OF SECTION

APPENDIX C

Leachate Acceptance Letter
Town of Marshall, North Carolina

TOWN OF MARSHALL

P.O. BOX 548
180 SOUTH MAIN STREET
MARSHALL, NC 28753

828-649-3031
828-649-3413 Fax

Lawrence Ponder, Mayor
Aileen Payne, Mayor Pro-Tem

12 September, 2010

Mr. Jim Huff
Solid Waste Director
Madison County, North Carolina

RE: Acceptance of Leachate at the Town of Marshall Wastewater Treatment Facility from the Madison County Solid Waste Landfill

Dear Mr. Huff,

Per the Town of Marshall Pretreatment program Regulations, the Town of Marshall will accept leachate from the Madison County Solid Waste Landfill under the following conditions:

1. All leachate to be delivered to the wastewater treatment facility shall be tested by a NC certified wastewater laboratory before delivery and must be approved by the Town of Marshall Pretreatment Program Coordinator.
2. The Maximum Daily Load Limit for Biochemical Oxygen Demand (BOD_5) of the leachate delivered to the wastewater plant shall not exceed 30 pounds per day.
3. The Maximum Daily Load Limit for Total Suspended Solids (TSS) of the leachate delivered to the plant shall not exceed 30 pounds per day.
4. The pH of the leachate shall be between 6 and 9 Standard pH Units (SU).
5. The maximum daily flow of leachate to be accepted shall be calculated using the concentrations measured for BOD_5 and TSS in the formula:

$$\text{Maximum Allowable Flow (MGD)} = \frac{\text{Allowable Pounds per Day}}{\text{Concentration mg/l (8.34)}}$$

6. In no case shall flows above 9,000 gallons per day (0.009 MGD) be accepted at the Wastewater Treatment Facility.
7. The Town of Marshall shall designate the dump location for the leachate pump and haul operation.

Respectfully Submitted,

Lawrence Ponder
Mayor
Town of Marshall

Alderman: David Allen Billie Jean Haynie Dennis Ledford Luther Nix

APPENDIX D

Explosive Gas Monitoring Procedure

Appendix D

EXPLOSIVE GAS MONITORING PROCEDURE
MADISON COUNTY LANDFILL
PERMIT #58-03

Quarterly the Madison County landfill will monitor for explosive landfill gases at the landfill gas monitoring probes/wells, as shown on Sheet C-101, Facility Plan, Madison County Landfill, in Appendix A. The County is also required to perform quarterly monitoring at/in all existing and future enclosed on-site structures. Currently, the occupied on-site structures include the Maintenance and Recycling Building and the Scale House. Other small structures include miscellaneous storage structures, valve control houses, pump stations, etc.

The location and spacing of the landfill gas monitoring probes/wells are in accordance with Permit No. 58-03, for the Madison County Landfill Facility.

The migration of methane and other explosive landfill gases (landfill gas) is induced by pressure gradients. Landfill gases will move from areas of high pressure to those of low pressure following the path of least resistance. Landfill gas will generally migrate vertically until it reaches the landfill surface where it may begin to flow horizontally until it finds a pathway out through the permeable in situ soils or a landfill gas venting/extraction system. Experience has shown that whenever gas is migrating no matter what the spacing or depth of the monitoring probes, the gas will fill the void created by the monitoring well and an explosive gas detection meter will monitor the level of concentration.

The level of methane gas (CH_4), a constituent within the landfill gas, can be detected by use of an instrument designed to detect explosive gas concentrations. In this case, the instrument that will be used will be a landfill gas detection metering device specifically designed for use in monitoring landfill gas concentrations. The meter will be equipped with an internal vacuum pump capable of drawing gas from within the voids in the monitoring probe/well. Meter readings will depict methane gas (CH_4) concentrations in percent of the Lower Explosive Limit (% LEL) and/or total percent methane gas concentration (% CH_4). Depending on the particular meter utilized, other readings such as the percent concentration of carbon dioxide (% CO_2) and percent concentration of oxygen (% O_2) will be recorded. The field calibration and use of the monitoring instrument should be in accordance with the manufacturer's instructions. Observations and readings for the landfill gas monitoring probes/wells will be recorded on the "Landfill Gas Measurements - Field Worksheet, Madison County Landfill, Permit #58-03" included as Attachment 1 to Appendix D. Observations for the various on-site structures will also be recorded on the attached form.

Exterior Monitoring and Response Plan

Quarterly, a County employee or contractor for the County will visit each landfill gas monitoring probe/well. Using the detection instrument, he/she will determine if landfill gas is present in the monitoring probe/well. Observations will be recorded on the aforementioned "Landfill Gas Measurements - Field Worksheet, Madison County Landfill, Permit #58-03" form.

If landfill gas is present and the level is detected at or above the lower explosive limit (100% LEL) then the Madison County Solid Waste Director will be notified immediately. If it is determined that explosive landfill gas has or may have migrated beyond the particular monitoring well then additional steps may be implemented to delineate the extent of any suspected landfill gas migration. If it is determined that explosive landfill gas has or may have migrated across the landfill boundary then the facility will immediately take all necessary steps to ensure protection of human health. The Solid Waste Director will then notify the North Carolina Department of Environment and Natural Resources (NCDENR), Solid Waste Section in the Asheville Office. The Director will follow-up the telephone call with an electronic mail message detailing the event and the steps taken to protect human health. Within seven (7) days of detection, the methane gas levels detected and a description of the steps taken to protect human health will be placed in the operating record. Within 60 days of the detection of suspected landfill gas migration beyond the landfill boundary, the County will prepare and implement a remediation plan for the suspected landfill gas releases. A copy of the remediation plan will be placed in the operating record and the NCDENR will be notified that the plan has been implemented. The plan will describe the nature and extent of the problem and the proposed remedy. Resampling of the affected landfill gas monitoring wells will be performed as necessary to evaluate the effectiveness of the approved remediation plan.

Interior/Structure Monitoring and Response Plan

Other quarterly monitoring locations will be the on-site structures located within the landfill's Facility Boundary. Each structure will be monitored for explosive landfill gas using the following general protocol:

1. Crawl spaces, if applicable, will be monitored;
2. Corners in the structure, if accessible, will be monitored;
3. Any observed holes, cracks and/or pipe penetrations through the foundation will be monitored.

Observations will be recorded on the aforementioned "Landfill Gas Measurements - Field Worksheet, Madison County Landfill, Permit #58-03" form.

If methane gas is detected at or above 25% of its lower explosive limit (25% LEL) in any structure, excluding gas control or gas recovery system components, the detection instrument will be recalibrated in accordance with the manufacturer's recommendations/procedures and the structure resampled. If the reading is still at or above 25% LEL, immediately evacuate the building and take all steps necessary to protect human health. The Madison County Solid Waste Director will be immediately notified. The Solid Waste Director will then notify the NCDENR,

Solid Waste Section in the Asheville Office. The Director will follow-up the telephone call with an electronic mail message detailing the event and the steps taken to protect human health. Within seven (7) days of initial detection, the methane gas levels detected and a description of the steps taken to protect human health will be placed in the operating record. Upon taking the necessary safety precautions, attempt to determine the source of the explosive gas. If the source is found, initiate repairs to prevent re-infiltration of the landfill gas or remove the source. If the source of the landfill gas infiltration can not be easily determined and/or promptly corrected then the structure must be closed and marked to prevent further occupancy. The County will then prepare and implement a remediation plan for the suspected landfill gas releases within sixty (60) days of initial detection. The plan will describe the nature and extent of the problem and the proposed remedy. A copy of the remediation plan will be placed in the operating record and the NCDENR will be notified that the plan has been implemented. The structure will remain closed for occupancy until such time as the repairs and/or remediation plan have been implemented, completed and the structure retested for the presence of landfill gas. The structure will be reopened for occupancy once the landfill gas concentrations are below the 25% LEL concentration.

Landfill/Explosive Gas Monitoring Procedures

The following general procedures should be followed relative to conducting monitoring in onsite structures and/or the landfill gas monitoring probes/wells on the site:

Preliminary Procedures:

a. Prepare the Landfill Gas Measurements – Field Worksheet (Attachment 1) noting the name of the person taking readings, date, weather conditions, ambient temperature, atmospheric pressure, gas monitoring equipment, factory calibration date and field calibration date.
b. Check the monitoring instrument to ensure the water trap has a clean dry filter and the inlet particulate filter is clean and dry, if so equipped.
c. Check the monitoring instrument for proper operation and battery strength.
d. Field calibrate the monitoring instrument in accordance with the manufacturer's recommendation/procedure.
e. Proceed to the first monitoring point.

Interior/Structure Monitoring Procedures:

a. Prior to entering/monitoring the structure 1) note the time on the Landfill Gas Measurements – Field Worksheet form for the particular structure being monitored 2) turn the meter on and purge with ambient air to obtain a methane reading of 0%.

b. For interior monitoring, proceed to the test area and enter as gently as possible. Avoid creating air movement, which can disperse methane. If sampling air in a closed space such as a leachate pump station, keep the cover closed as much as possible to prevent dispersal of the gas. If

monitoring in a confined space, install a gas probe rod on the end of the tube and insert it into the space. **Sampling personnel should never enter a confined space without proper training and the appropriate permit and supervisory approval.**

c. Let the meter stabilize and read the gas levels indicated, (i.e. % LEL or % volume for methane, and carbon dioxide and oxygen if so equipped).

d. Note results on the Landfill Gas Measurements – Field Worksheet (Attachment 1). The location of the test should be noted.

e. Replace covers or caps removed to access sampling areas.

f. Repeat the process for the next monitoring location or structure.

If methane gas levels are detected and confirmed to be at or above 25% of the LEL, the facility will immediately initiate the response plan outlined in the Interior/Structure Monitoring and Response Plan noted above.

Exterior Monitoring Procedures:

a. Purge the meter with on-site ambient air to obtain a methane reading of 0%.

b. Record time of sample collection at the landfill gas probe/well.

c. Check monitoring point for condition and suitability for monitoring. Record any problems with the location of the Landfill Gas Measurements Field Worksheet.

d. Remove the sample tube cap. Connect the sample tube to the sample port.

e. First, monitor the relative pressure inside the probe if the monitoring instrument is so equipped. Draw a sample through the meter. Monitor methane readings until a steady state methane reading is obtained. Record the steady state reading.

f. Disconnect sample tube from the probe/well. Replace the tube cap whenever the meter is not connected to the tube.

g. Proceed to the next monitoring point and repeat the above procedures.

If methane gas levels are detected and confirmed to be at or above 100% of the LEL, the facility will immediately initiate the response plan outlined in the Exterior Monitoring and Response Plan noted above.

ATTACHMENT 1

LANDFILL GAS MEASUREMENTS – FIELD WORKSHEET
Madison County Landfill
Permit #58-03

LANDFILL GAS MEASUREMENTS – FIELD WORKSHEET
Madison County Landfill
Permit #58-03

Name of Person Taking Readings: _____ Date: _____

Weather Conditions: _____ Ambient Temperature: _____

Atmospheric Pressure: _____

Gas Monitoring Equipment: _____

Factory Calibration Date: _____ Field Calibration Date: _____

Well/Probe ID or Structure	Time	Readings (stable or variable)	% LEL	% CH_4	% CO_2	% O_2	Notes:
LFG-01							
LFG-02							
LFG-03							
LFG-04							
LFG-05							
LFG-06							
Maint. & Recycle Bldg.							
Scale House							
*							

* - Other miscellaneous structures will be monitored and the observations noted on the form.

Field Observation Notes:

_____

_____

_____

_____

_____

_____