Application For

Permit to Construct A

Mixed Waste Processing Facility

And An

RDF-Fired

Energy Generation Facility

Carmen Johnson
54-05I ~~3/28/12~~ 4/2/12 (cj)

At

3031 Black Creek Road
Wilson, North Carolina

Submitted By:

Wilson Resources, L.P.
11757 Katy Freeway, Suite 1420
Houston, Texas 77079

Prepared By:

Kenneth L. Woodruff & Associates
P.O. Box 42
Morrisville, Pennsylvania 19067

In Cooperation With:

TRI-MONT Engineering Company
529 Main Street, Suite 208
Boston, Massachusetts 02129

APPROVED
DIVISION OF SOLID WASTE MANAGEMENT
DATE 3/15/95 BY SCH

AUGUST 1994

Revised

JANUARY 1995

APPLICATION FOR
PERMIT TO CONSTRUCT A
MIXED WASTE PROCESSING FACILITY
AND AN
RDF-FIRED ENERGY GENERATION FACILITY

AT

3031 BLACK CREEK ROAD
WILSON, NORTH CAROLINA

SUBMITTED BY:

WILSON RESOURCES, L.P.
HOUSTON, TEXAS

SUBMITTED TO:

STATE OF NORTH CAROLINA
DEPARTMENT OF ENVIRONMENT, HEALTH AND NATURAL RESOURCES
SOLID WASTE SECTION
P.O. BOX 27687
RALEIGH, NORTH CAROLINA 27611-7687

AUGUST 1994

REVISED

JANUARY 1995

JAN 1995
Received
Solid Waste

Carolina Energy, L.P.
Mixed Waste Processing Facility &
RDF-Fired Energy Generation Facility

Wilson, North Carolina

1	INTRODUCTION PROJECT SUMMARY FACILITY DESCRIPTION ZONING APPROVAL
2	MATERIALS RECOVERY FACILITY (MRF) SPECIFICATIONS
3	MATERIALS RECOVERY FACILITY (MRF) PLANS
4	ENERGY GENERATION FACILITY (EGF) SPECIFICATIONS
5	ENERGY GENERATION FACILITY (EGF) PLANS
6	AIR PERMIT APPLICATION-PROJECT DESCRIPTION FORMS
7	DRAFT OPERATION & MAINTENANCE MANUAL MRF
8	DRAFT OPERATION & MAINTENANCE MANUAL EGF

WilsonJones

Title Page

118551

© 1991 Wilson Jones Company

TABLE OF CONTENTS

SECTION I

1.0 Introduction		1
1.1 Site Location		1
1.2 Facility Description		2
1.3 Zoning Approval/Special Use Permit		3
1.4 Compliance with Siting/Design Requirements		4
1.4.1	Surface Water Requirements	4
1.4.2	Groundwater Standards	5
1.4.3	Sediment Pollution Control	6
1.4.4	Air Pollution Control	6
1.4.5	Site Access Control	6
1.4.6	Odor Control	6
1.5 Facility Details		6
1.5.1	Area Served	6
1.5.2	Type and Quantity of Waste	7
1.5.3	Process Flow Diagram	7
1.5.4	Description of Storage Facilities	8
1.5.5	Separation and Processing, Disposal of Rejects	9
1.5.6	Surface Water Runoff Control	10
1.5.7	Final Produce Use	11
1.5.8	Daily Traffic Flow	11
1.5.9	Truck Unloading	12
1.5.10	Operation Arrangements	12
1.5.11	Personnel	12
1.5.12	Operation Schedule	13
1.5.13	Special Operating Procedures	14
1.5.14	Nuisance Controls	14
1.5.15	Unacceptable Waste Handling	14
1.5.16	Plans and Specifications	15
1.5.17	Draft Operation and Maintenance Manuals	15

Section 1 - Appendix
- Order Granting Special Use Permit
- City of Wilson Zoning Letter
- Special Use Permit Application

NEW SECTION 1

1.0 INTRODUCTION

Carolina Energy, Limited Partnership (Carolina) has entered into long term agreements with Wilson, Lenoir and Pitt Counties for the processing, recycling and energy recovery (resource recovery) from municipal solid waste (MSW) generated within the Counties. Final negotiations are underway in several other eastern North Carolina Counties including Nash and Edgecombe Counties. Copies of waste supply agreements are included in the Updated Supplemental Information Document which accompanies this Application.

Carolina Energy, Limited Partnership is owned by the following: limited partners are Energy Investors Fund, L.P., Kvaerner Venture, Inc. and QUIXX Corporation. The general partner is Carolina Energy Corp., a subsidiary of VEDCO Energy Corp. Metric/Kvaerner Fayetteville will be the turnkey contractor, and QUIXX Power Services, Inc. will operate and maintain the project facilities under contract to Carolina. Therefore, Carolina participants are substantially identical to the team presently implementing the BCH Energy, L.P. Project in Bladen, Cumberland and Hoke Counties, North Carolina.

Carolina Energy, L.P. is the limited partner of Wilson Resources, L.P., which is the owner-operator of the Wilson, NC Facility.

1.1 SITE LOCATION

Two (2) separate site locations in eastern North Carolina will be leased for facility construction and operation ot the Carolina Energy Project.

1. A Materials Recovery Facility (MRF) and Energy Generation Facility (EGF) located in Wilson County. (Wilson Resources, L.P.)
2. An Energy Generation Facility (EGF) located adjacent to the DuPont Kinston Works in Lenoir County.

This document describes the Wilson Resources, L.P. MRF and EGF to be located at 3031 Black Creek Road, S.E., Wilson, Wilson County.

1.2 FACILITY DESCRIPTION

Wilson Resources, L.P. plans to construct and operate a facility in Wilson County, NC to accept and process approximately 400,000 tons per year of municipal solid waste (MSW) for the recovery of ferrous metals, aluminum, newspaper, corrugated cardboard, various plastics and an aggregate product. Refuse-derived fuel (RDF-3) will be produced for boiler fuel. A portion of the RDF-3, approximately 96,000 tons per year, will be burned on-site for the production of steam and electricity. The balance of the RDF-3, approximately 190,000 tons per year, will be transported to the Carolina Energy, L.P. Facility (EGF) to be located in Kinston, Lenoir County, where it will be combusted to produce steam for sale to the adjacent DuPont Kinston Works.

Ferrous metals and white goods (appliances) recovered from the waste stream will also be processed on-site utilizing a metals shredding system for the production of high quality shredded steel scrap.

The facility is to be located at 3031 Black Creek Road, S.E., Wilson, North Carolina.

The proposed Wilson Resources, L.P. Facility incorporates three (3) operations as follows:

1. Materials Recovery Facility (MRF)
2. Energy Generation Facility (EGF)
3. Metals Shredding Facility (MSF)

The facility will receive municipal solid waste (MSW) from Pitt, Lenoir, Wilson, Edgecombe and Nash Counties. The MRF will process the MSW to recover paper, metals and plastics, as well as an aggregate product. A specification fuel product will be produced. This shredded fuel product known as RDF-3 is defined by American Society for Testing and Materials (ASTM) designation E1126-87 as shredded fuel derived from municipal solid waste that has been processed to remove metal, glass, and other inorganics for recycling and which has a particle size such that 95 percent by weight of the material will pass through a two-inch square mesh screen. It is estimated that the

RDF-3 will consist of approximately 65 percent (by weight) paper and paper products, less than 15 percent rubber and plastics, 5 percent wood and textiles, and 15 percent non-combustibles on a dry weight basis. Moisture content is expected to be approximately 20 percent by weight.

A portion of the RDF-3 will be burned at the on-site EGF to generate steam and electricity for in-plant use. The EGF consists of one (1) 125 million BTU per hour heat input bubbling fluidized bed combustor. The bulk of the RDF-3 will be trucked to the Carolina Energy, L.P. Lenoir County Facility to be located adjacent to the DuPont Kinston works where it will be burned to generate steam.

The Metals Shredding Facility (MSF) will process all ferrous metal scrap, including white goods, recovered at the on-site MRF, as well as ferrous scrap recovered at the BCH Energy, L.P. MRF Facility located in Fayetteville, Cumberland County, NC. In addition, bulky aluminum scrap recovered at the MRF facilities in Wilson and Fayetteville will be processed to produce a high quality aluminum scrap product to be sold to the secondary aluminum industry.

1.3 Zoning Approval/Special Use Permit

The Facility Site located at 3031 Black Creek Road, S.E., Wilson, NC is Zoned I-2 (Heavy Industrial). In accordance with City of Wilson Zoning Ordinance, use of the site for a recycling center requires a Special Use Permit from the City of Wilson Board of Adjustment. On June 20, 1994, Carolina Energy, L.P. submitted an application for a Special Use Permit. The application was formally presented to the Board of Adjustment at the regularly scheduled meeting held July 19, 1994. After the opportunity for Public Comment, the Board of Adjustment approved the Special Use Permit for the site subject to conditions as follows:

1. That the applicant and operator of the establishment shall fully comply with all of the requirements of this order together with any other applicable state or local rules, ordinances, laws and regulations of whatever nature;

2. that if any of the conditions affixed hereto or any part thereof shall be held invalid or void, then this permit shall become void and of no effect;
3. that this permit is granted for a scrap yard used as a recycling center where no retail activity is conducted on the premises and where no wrecked, scrapped, ruined or dismantled motor vehicles or motor vehicle parts are stored or kept on the premises, ONLY;
4. that a site plan, meeting all appropriate requirements of the Zoning Ordinance, particularly those pertaining to Section 8.23, be submitted and approved by the Technical Review Committee (TRC) prior to construction;
5. that all outside storage of scrap materials shall meet the requirements of Section 8.23; and
6. that any "Weigh Station Queue" be located on private property and that vehicles using this facility are prohibited from blocking traffic on Black Creek Road.

A copy of the zoning determination letter prepared by the City of Wilson, Department of Development Services, the Special Use Permit Application, correspondence and Order Granting Special Use Permit are included in the Section 1 Appendix.

1.4 COMPLIANCE WITH SITING/DESIGN REQUIREMENTS

1.4.1 Surface Water Requirements

The Wilson Facility will purchase potable water from the City of Wilson from a water main located in Black Creek Road.

All wastewater (sanitary, boiler blowdown, tipping floor cleanup wastewater, wet scrubber wastewater blowdown) will be discharged to the City of Wilson sanitary sewer system via a new manhole in the existing 30-inch sewer line passing along the northern boundary of the site.

Stormwater from the site will be discharged via existing drainage ditches and retention ponds to the Hominy Swamp, east of the site.

Prior to construction, the Contractor shall obtain an NPDES Permit from NC DEHNR for Stormwater Discharge from Construction Activities The site should qualify for coverage under General Permit No. NCG010000.

Six (6) months prior to the start of operations, Wilson Resources, L.P. shall submit an Application to NC DEHNR for an NPDES Permit for Stormwater Discharge. The facility is expected to qualify for coverage under General Permit No. NCG130000.

1.4.2 Groundwater Standards

All MSW, recovered materials from the MRF operation, reagents used in the combustion process air pollution control system, ash residues, process residues and non-processible wastes will be stored indoors or in closed bins/containers/trailers. The only material stored outdoors will be shredded scrap metals (ferrous and aluminum) produced by the on-site metal shredding facility. Storage areas for shredded metal shall be diked or sloped to contain stormwater. Stormwater shall flow through an oil/water separator prior to discharge to the site stormwater discharge system.

Wastewater accumulated indoors which has come in contact with MSW, will be discharged to the sanitary sewer system.

Site roadways will be paved and routinely maintained by an on-site mechanical sweeper.

Due to the fact that paved areas will be maintained through regularly sweeping, water potentially contaminated with MSW will be maintained indoors and discharged to the sanitary sewer and stormwater from the metal shredding area will be passed through an oil/water separator prior to discharge, neither surface water quality nor groundwater quality is likely to be adversely affected by the facility operations.

1.4.3 Sedimentation Pollution Control

Prior to the start of construction, the Contractor shall prepare an application for and obtain Sedimentation and Erosion Control Plan Approval from NC DEHNR.

1.4.4 Air Pollution Control

An application for an Air Permit for the Facility has been filed with the NC DEHNR, Division of Environmental Management, Air Permits Section. A copy of the introduction to that document, as well as a copy of the application forms are included in Section 6 of this document.

1.4.5 Site Access Control

As indicated on the Site Plan (See Section 3), the entire site is fenced with controlled access from Black Creek Road. No uncontrolled access is available at the site.

1.4.6 Odor Control

Potential odors from the receipt and handling of MSW, as well as the storage and handling of RDF will be controlled by maintaining the MRF facility under negative pressure. Two (2) dust collection systems, totalling 70,000 CFM will be operated in the MRF processing area, with exhaust discharged 130 feet above grade after passing through fabric filter dust collectors. In addition, combustion air totalling 30,000 CFM for the on-site RDF combustor will be drawn from the RDF processing, handling and storage areas.

1.5 FACILITY DETAILS

1.5.1 Area Served

The Carolina Energy, L.P. project will serve the Counties of Pitt, Lenoir, Wilson, Nash and Edgecombe. Pitt County, Lenoir County and Wilson County have

entered into long term contracts with Carolina Energy, L.P. Final negotiations are underway with Nash and Edgecombe Counties. Copies of Contract Documents are included in the Updated Supplemental Information Document submitted with this Application.

1.5.2 Type and Quantity of Waste

The Wilson Facility will accept household and commercial wastes from the five (5) counties.

The Pitt County contract provides a minimum of 90,000 tons per year of MSW. It has been estimated that actual waste deliveries may be 112,500 tons per year. Pitt County waste will be hauled to the Wilson MRF via a transfer station to be constructed adjacent to the existing Pitt County Landfill in Greenville, NC.

The Lenoir County contract provides a minimum of 40,000 tons per year. It has been estimated that actual deliveries may be 50,000 tons per year. Lenoir County waste will be handled via a transfer station/materials recovery facility to be constructed and operated by Carolina Energy, L.P. located near the existing Lenoir County Landfill.

Wilson County MSW deliveries are estimated to be as much as 62,500 tons per year, with 50,000 tons guaranteed. Wilson County waste will be hauled directly to the MRF in collection vehicles.

Nash and Edgecombe County MSW may amount to 100,000 tons per year. Nash and Edgecombe waste is likely to be handled via the existing Rocky Mount Transfer Station.

All incoming wastes, outgoing products and residues will be weighed on the facility truck scales. Data will be recorded for all incoming and outgoing materials. Based on the ratio of quantities of incoming wastes from participating counties, products will be allocated and reported annually to the counties.

1.5.3 Process Flow Diagram

Process Flow Diagrams for the MRF and Metals Shredding Facility (MSF) are included in Section 3, while the Flow Diagram for the EGF is included in Section 5.

1.5.4 Description of Storage Facilities

All incoming MSW will be discharged in the MRF receiving building consisting of approximately 14,250 square feet storage area. The tipping floor is a conventional concrete tipping floor area on which a front end loader operates for stockpiling and transfer of MSW onto the two (2) process line feed conveyors. The tipping floor is designed to store 1400 tons of MSW. The entire receiving system is designed to receive up to 2100 tons of MSW in a 10 hour period of time.

RDF produced by the facility will be compacted into trailers for transfer off-site to the Kinston EGF or for transfer to the on-site EGF fuel storage system. On-site RDF storage capacity is approximately 180 tons.

Recovered materials including paper, corrugated, plastics (HDPE and PET) and aluminum cans will be baled prior to shipment to market. Bales will be stored in the MRF area prior to forklift loading into van trailers.

Recovered ferrous metals and bulky aluminum will be stored in roll-off containers prior to transfer to the on-site metals shredding facility tipping floor.

Non-processible materials and process residue will be stored indoors in roll-off containers prior to transfer to the designated disposal facility.

Fly ash residue from the EGF combustion system will be pneumatically conveyed to a totally enclosed ash storage bin equipped with a fabric filter dust collector prior to discharge to an ash conditioning system and then into covered trailers for delivery to an end user or transfer to the Cumberland County Ann Street Landfill.

Bottom ash (tramp) residue will be stored in roll-off containers prior to transfer to disposal.

The metals shredding facility tipping floor on which recovered ferrous metals and bulky aluminum are stored, prior to processing into high quality scrap products, is covered. Storage capacity in the MSF receiving building is approximately 800 tons. This provides sufficient area for stockpiling and inspection of white goods for removal of CFC refrigerants prior to shredding.

Shredded and cleaned metal products are stored outdoors on concrete paved areas. Process residue from the metals shredding facility is mechanically conveyed back to the RDF loadout compaction system.

1.5.5 Separation and Processing, Disposal of Rejects

Non-recyclable materials will be separated from the waste stream at several locations in the process. First, large non-processible objects identified by the front-end loader operator will be removed from the tipping floor. Such items include mattresses, box springs, etc. These materials will be placed in a roll-off container to await disposal at the designated landfill facility.

Additional non-processible materials will be removed by the grapple operator located over the two (2) feed conveyors and at the first picking station on the main feed conveyors. All non-processibles will be collected in roll-off containers for storage prior to landfill disposal.

Recyclables including lead acid batteries and white goods will be separated from the waste for special handling. Lead acid batteries will be stacked on pallets and stored indoors prior to sale to a battery reclaimer. White goods will be collected in roll-off containers for transfer to the on-site metal shredding facility.

Process residue is generated from the minus 2-inch fines resulting from the trommel screening operation. This material will be processed through two stages of air density separation, as well as crushing and screening to produce a relatively clean glassy aggregate product which is expected to be suitable for use in the manufacturing of hot mix asphalt or concrete. Organic materials removed from this stream are combined with

the RDF product. The non-recoverable dirty fine fraction is conveyed to a roll-off container to await sanitary landfill disposal.

As indicated previously, fly ash residue is anticipated to be beneficially used as an additive in the manufacturing of portland cement, or production of hot mix asphalt or concrete. The ash will be periodically tested for TCLP Toxicity in accordance with Federal and NC DEHNR requirements. Prior experiences indicates that the flyash is likely to be non-toxic and suitable for beneficial use. Samples of flyash, typical of this system, have been tested by NC DOT and found to be suitable for approval as Class F Flyash. Upon startup of the facility, samples will be analyzed and provided to NC DEHNR and NC DOT for review and approval.

If for any reason the combustion ash can not be beneficially used, it will be disposed at the Cumberland County Ann Street Landfill located in Fayetteville, NC in a Subtitle D lined landfill cell.

Tramp material (bottom ash) will be disposed at the Cumberland County Ann Street Landfill unless approved for beneficial use as a coarse aggregate product.

The Cumberland County Board of Commissioners approved a Resolution on April 18, 1994 authorizing an amendment to the Resource Recovery Agreement with BCH Energy, Limited Partnership to include the disposal of residue and fines from the Carolina Energy, L.P. Project. A copy of the details of this agreement are in included in Section 3 of the Supplemental Information Document which accompanies this Application.

Prior to startup of the facility, a Comprehensive Ash Management Plan will be submitted for approval by the NC DEHNR Solid Waste Section and Hazardous Waste Section.

Process residue from the minus 2-inch fines separation operation will be disposed at the Cumberland County Ann Street Landfill.

Non-processible rejects will be disposed in an approved sanitary landfill, such as the Cumberland County or Sampson County Landfills.

1.5.6 Surface Water Runoff Control

Surface water runoff at the Wilson Resources, L.P. Facility will be controlled through an on-site drainage system which channels water to the existing drainage ditch along the northern property boundary and through an existing retention basin at the eastern side of the site. All stormwater runoff ultimately flows into the Hominy Swamp. The site roadways will be maintained through the routine operation of a mechanical sweeper.

All liquid and process wastewater generated within the facility will be collected for disposal via the sanitary sewer system to the nearly Hominy Creek POTW.

1.5.7 Final Product Use

All products shipped from the site will be in covered or enclosed trailers or covered roll-off containers. In the event a final product cannot be marketed due to poor quality or change in market conditions, it will be disposed in an appropriate landfill.

The list of products from the Wilson Resources, L.P. Facility and the means of removal from the site is as follows:

Product	Form	Vehicle Type
Paper	Baled	Van Trailer
Corrugated	Baled	Van Trailer
Aluminum Cans	Baled	Van Trailer
Plastics	Baled	Van Trailer
Glassy Aggregate	Loose	Dump Trailer or Roll-off
Ferrous Metals	Loose, Shredded	Dump Trailer
Bulky Aluminum	Loose, Shredded	Dump Trailer
RDF	Compacted	Live Bottom Trailer

1.5.8 Daily Traffic Flow

Traffic to the Wilson Resources, L.P. Facility will include packer trucks and transfer trailers delivering MSW, as well as trucks arriving to haul products to markets/end users and non-processibles/residuals to landfill disposal sites.

Vehicles delivering MSW to the facility are expected to average 75 per day with a peak of 112 per day.

Products and residual materials truck traffic is expected to average 52 vehicles per day.

Incoming MSW traffic is expected to arrive during a 10 hour period Monday through Friday and 6 hours on Saturday. Product and residual materials vehicle traffic will occur throughout the two (2) shift operation of the MRF Monday through Friday and expected single shift Saturday. Trucks arriving at the facility will queue on the entrance driveway parallel to Black Creek Road to avoid blocking traffic on the public roadway.

1.5.9 Truck Unloading

Waste arriving at the Wilson Resources, L.P. Facility in transfer trailers or in packer trucks will be discharged onto one (1) of the two (2) tipping floor areas. A total of ten (10) receiving bays will be available for incoming loads of MSW. All waste vehicles will back into the tipping building for unloading. No MSW will be discharged outdoors.

1.5.10 Operation and Maintenance Arrangements

Carolina Energy, L.P. will contract with Quixx Power Services, Inc. (QUIXX) of Amarillo, Texas to operate and maintain the Wilson Resources, L.P. Facility. QUIXX will be responsible for the day-to-day operation and maintenance of all portions of the facility.

1.5.11 Personnel

It is anticipated that the following personnel will be required to operate the Wilson Resources, L.P. Facility:

MRF	Number
Chief Facility Operator	1
Assistant Facility Operator	1
Transportation Manager	1
Scale Clerk/Secretary	3
Shift Supervisor	2
Loader Operator	2
Recovery Personnel	16
Maintenance	3
Maintenance Helpers	3
Forklift Operator	2
Truck Driver	2
TOTAL	36
EGF	
Shift Supervisor	4
Control Room Operator	4
MSF	
Operator	1
Loader Operator	2
Quality Control	1
Contract Labor	
Truck Drivers	11

1.5.12 Operation Schedule

The MRF portion of the Wilson Resources, L.P. Facility will operate six (6) days per week on a two (2) shift basis. Waste will be received from 7AM to 5PM Monday through Friday and 7AM to 1PM on Saturday. Waste processing will occur on a two (2) shift basis (16 hours per day), during the hours of 7AM to 11PM.

At the end of the operating day, the MRF will be swept and maintenance will be performed in preparation for the next operating day.

The Metals Shredding Facility will also operate on a two (2) shift per day basis, from 7AM to 11PM, a maximum of six (6) days per week.

The EGF portion of the facility will operate three (3) shifts per day, seven (7) days per week. During times when the MRF and MSF are not in operation, electricity will be sold to Carolina Power & Light Co.

1.5.13 Special Operating Procedures

During storm conditions, the MRF and EGF portions of the facility will continue to operate, assuming that waste can be delivered to the facility. The MSF operations may be curtailed and unprocessed metals stockpiled in the enclosed tipping area to await processing when normal operations resume.

1.5.14 Nuisance Controls

Noise will be controlled by maintaining most operations indoors and through the monitoring of noise levels from on-site mobile equipment. The exception to this is the metal shredder which is located outdoors. However, it is located near the eastern end of the site, away from Black Creek Road. Trees and the Hominy Swamp separate the area from the nearest neighbor which is the Sewage Treatment Plant.

Vectors will be controlled through daily cleaning of the facility and periodic inspections by a qualified exterminator.

Particulates and odors will be controlled via maintaining the MRF and the RDF storage and handling areas under negative pressure. MRF ventilation air will be treated by two (2) 35,000 cfm fabric filter baghouse systems prior to discharge to atmosphere via 130 feet high exhaust stacks. RDF storage and handling ventilation air will be utilized as combustion air for the on-site EGF.

1.5.15 Unacceptable Waste Handling

All waste arriving at the facility will be inspected for unauthorized and unacceptable wastes, including hazardous and medical wastes. If any such materials are found, they will immediately be isolated from the waste in a designated area to await inspection, identification and proper disposal. The hauler delivering such materials to the facility will be notified and charged for proper disposal of such items.

1.5.16 Plans and Specifications

Detailed Specifications for the MRF and MSF portions of the facility are included in Section 2. MRF and MSF Plans are included in Section 3.

Detailed Specifications for the EGF portion of the facility are included in Section 4. EGF Plans are included in Section 5.

1.5.17 Draft Operation and Maintenance Manuals

A Draft Operation and Maintenance Manual for the MRF is included as Section 7.

A Draft Operation and Maintenance Manual for the EGF is included as Section 8. The Standard for the Qualification and Certification of Resource Recovery Facility Operators (ASME QRO-1-1994) is included at the end of Section 8. The Chief Facility Operator and Shift Supervisors will be Certified in accordance with this Standard.

ZONING BOARD OF ADJUSTMENT
WILSON, NORTH CAROLINA

ORDER GRANTING SPECIAL USE PERMIT

The Board of Adjustment for the City of Wilson, having held a public hearing on July 19, 1994, and after hearing all of the evidence finds the following facts:

1. that the applicant, Carolina Energy L.P., seeks a Special Use Permit to operate a "scrap yard used as a recycling center where no retail activity is conducted on the premises and where no wrecked, scrapped, ruined or dismantled motor vehicles or motor vehicle parts are stored or kept on the premises" in an I-2 zone at 3031 Black Creek Road;

2. that said property is currently being used as a heavy equipment operator's (earth-moving equipment) training site; and

3. that the applicant seeks a Special Use Permit under Section 7 of the Zoning Ordinance.

4. The Board further finds the following:

TAX PARCEL: 295-1-3

SURROUNDING LAND USES AND ZONING:

NORTH	-	Farm land and house (I-2)
SOUTH	-	S. T. Wooten Corp. (I-2)
EAST	-	City sewage treatment plant (I-2)
WEST	-	Porritts & Spencer, Inc. (I-2)

SIZE OF SITE: 37 acres

STAFF ANALYSIS: This use is permitted as described in the item listing with a Special Use Permit and subject to the requirements of Section 8.23. The site easily meets the location requirements of that section. Police, Fire, and Inspections indicate approval.

Site plan approval is required before construction, and while it is not necessary prior to the Board's approval, a "preliminary" site plan was submitted to the Board to help them visualize the project. For the applicant's benefit, the following deficiencies were noted in the plan (there may be others):

1. a 15-foot firebreak completely surrounding the establishment is required <u>outside</u> the fence ... must be kept cleared and mowed ... no structures, signs, debris, parked vehicles, etc.

2. the fence along the front (facing Black Creek Road) must block visual contact of the facility and meet the requirements of Section 8.23.D ... the remainder of the fencing can be likewise or 6-foot high chain link fence.

3. gates are limited to two, 20 feet wide each, and the gates must meet the requirements of #2, above.

In addition, the plan submitted shows a "weigh station queue" on Black Creek Road - a public right-of-way. Staff suggests the Board require that this be located on private property and that trucks using this facility be prohibited from blocking traffic on Black Creek Road.

Also, the site is not presently in the City limits. If City services are desired or required by the TRC, annexation will be required.

The rear of the site is located within the Floodway and 100-year flood plain. These boundaries must be shown on the site plan and appropriate regulations complied with.

Based upon all of the foregoing findings of fact, the Board makes the following conclusions:

1. that the use, with the conditions noted below, will not adversely affect the health or safety of persons residing or working in the neighborhood of the proposed use and will not be detrimental to the public welfare if located where proposed and developed according to the plan as submitted and approved;

2. that the use, with the conditions noted below, meets all required conditions and specifications;

3. that the use, with the conditions noted below, will not injure, by value or otherwise, adjoining or abutting property or public improvements in the neighborhood; and

4. that the location and character of the use, with the conditions noted below, if developed according to the plan submitted and approved, will be in harmony with the area in which it is to be located and in general conformity with the plan of development of Wilson and its environs.

Based upon all of the foregoing, the Board concludes that all of the general and specific conditions precedent to the issuance of a SPECIAL USE PERMIT have been satisfied.

NOW, THEREFORE, IT IS ORDERED by the Board of Adjustment that a SPECIAL USE PERMIT be GRANTED subject to the following conditions which will assure conformity to the requirements of the Zoning Ordinance:

1. that the applicant and operator of the establishment shall fully comply with all of the requirements of this order together with any other applicable state or local rules, ordinances, laws and regulations of whatever nature;

2. that if any of the conditions affixed hereto or any part thereof shall be held invalid or void, then this permit shall become void and of no effect;

3. that this permit is granted for a scrap yard used as a recycling center where no retail activity is conducted on the premises and where no wrecked, scrapped, ruined or dismantled motor vehicles or motor vehicle parts are stored or kept on the premises, ONLY;

4. that a site plan meeting all appropriate requirements of the Zoning Ordinance, particularly those pertaining to Section 8.23, be submitted and approved by the Technical Review Committee (TRC) prior to construction;

5. that all outside storage of scrap materials shall meet the requirements of Section 8.23; and

6. that any "weigh station queue" be located on private property and that vehicles using this facility are prohibited from blocking traffic on Black Creek Road.

Ordered this 19th day of July, 1994.

Joyce W Boyd — August 2, 1994
Chairman — Date

[signature] — 8/2/94
Secretary — Date

NOTE: If you are dissatisfied with the decision of this Board, an appeal may be taken to the Superior Court of Wilson County within 30 days after the date of this order. See Section 20.14 Appendix A-Zoning of the Wilson Municipal Code.

SUOG81.WP

CITY OF WILSON

North Carolina

INCORPORATED 1849

27894-0010

Department of
Development Services

May 12, 1994

DEHNR Solid Waste Section
Attn: James C. Coffey
P. O. Box 27687
Raleigh, NC 27611-7687

RE: 3031 Black Creek Road, Southeast

Dear Mr. Coffey,

Based upon the information provided to me on May 11, 1994, the property located on Black Creek Road, which can further be identified on the Wilson County Tax Map 295, Block 1 and Lot 3 is zoned I-2 (Heavy Industrial). This zone permits the "materials handling" facility that was described to me during a telephone conversation with Dale O'Hamm, of Wilson County Solid Waste Management, subject to a Special Use Permit from the Board of Adjustment. This use is permitted under the "scrap yards used a recycling centers" category in the Table of Permitted Uses for the I-1 and I-2 zones (see attached copy of permitted uses).

The Board of Adjustment meets the third (3rd) Tuesday of each month at 5:30 p.m. Please note that requests going before the Board, such as Special Use Permits, must be submitted to the Development Services office at least four (4) weeks prior to the Board's scheduled meeting. The next available meeting that your request could be heard is June 21, 1994. An application must be received by the Planning Division no later than May 24, 1994 if you wish to be placed on the agenda for this meeting. You may contact Pat Borelli at (919) 399-2212 if you have questions concerning the Special Use Permit.

If you have any questions, please feel free to contact me at (919) 399-2215 or Donna Avery, Development Review Coordinator at (919) 399-2213.

Sincerely,

Sheldon LeMay
Planner

xc: Donna H. Avery, Development Review Coordinator

TABLE OF PERMITTED USES	*I-1*	*I-2*
Offices and office buildings	X	X
Office-street parking facilities as provided under sections 5.5 through 5.10	X	X
Oxygen manufacturing and/or storage		X
Photographic developing, processing	X	X
Police stations, fire stations and other public buildings	X	X
Printing, publishing and reproduction establishments	X	X
Private clubs subject to a special use permit	X	X
Public utility distribution lines, transformer stations, transmission lines and towers, water tanks and towers	X	X
Quarries or other extractive industries subject to a special use permit		X
Railroad freight yards, terminals, or classifications	X	X
Repair of any goods permitted in any commercial and industrial district	X	X
Restaurants	X	X
Retail sales and services as permitted, restricted, and regulated in the B-4 district provided that the maximum gross floor area devoted to such use on a lot shall not exceed sixty-four hundred (6400) square feet.	X	
Retail sales of items manufactured on the premises	X	X
Schools, public or private	X	X
Scrap paper or rag storage, sorting or bailing when conducted within a building	X	X
Scrap yards used as recycling centers where no retail activity is conducted on the premises and where no wrecked, scrapped, ruined or dismantled motor vehicles or motor vehicle parts are stored or kept on the premises, subject to a special use permit and subject to the requirements of section 8.23	X	X
Sewage and water treatment plant	X	X
Sheet metal shops	X	X
Stonecutting, monument manufacture and sales	X	X
Storage—Miniwarehouses; and an accessory residential apartment for a security night watchman provided that: (a) Only one unit be constructed per site; (b) The maximum size per unit be limited to 1,000 square feet of habitual floor area; (c) The unit be constructed within the principal building	X	X
Storage warehouses and yards	X	X
Studios (but not dwellings) for artists and/or craftsmen	X	
Studios with dwellings for artists and/or craftsmen subject to a special use permit	X	
Taxi stands	X	X
Tinsmith shops	X	X
Tire recapping and retreading	X	X
Tobacco processing, stemming and redrying plants	X	X

Receipt No. _____

BOARD OF ADJUSTMENT
CITY OF WILSON, NORTH CAROLINA

GENERAL APPLICATION FOR A SPECIAL USE PERMIT

APPLICANT INFORMATION:

Name Carolina Energy L.P.

Driver's License Number N/A

Address 11757 Katy Freeway, Suite 1420, Houston, TX 77079

Phone (713) 558-4300

PROPERTY OWNER INFORMATION (IF DIFFERENT FROM ABOVE):

Name Wilson County - Department of Solid Waste Management

Address P.O. Box 1728, Wilson, NC 27893

Phone (919) 399-2823 (Mr. G. Stephen Clayton)

PROPERTY INFORMATION:

Address 3031 Black Creek Road, Southeast, Wilson, NC

Tax Number (Map/Block/Lot) (295/1/3)

Current (or most recent) use Earthwork Equipment Training Site

Zoning District I-2, Heavy Industrial

Other Description _____

DESCRIPTION OF THE PROPOSED USE OF THE PROPERTY:

Construction of a municipal refuse recovery facility and metals shredder for recycling plastics, paper, cardboard, aluminum and ferrous metal.

THE FOLLOWING MUST BE SUBMITTED WITH THIS APPLICATION:

1. A filing fee of $60.00

2. A copy of the deed or lease to the property, or a letter from the property owner, on the owner's letterhead, authorizing the applicant to use the property for the requested use

3. A map drawn to scale on an 8½x11 sheet, or larger, showing the following:

   a. The property, with the distances of the property lines shown
   b. The nearest intersection of two public streets (show all street names)
   c. All existing and proposed structures on the property, and their setbacks
   d. Applicant's name (if different from owner)
   e. Other such features necessary to describe the proposed use

4. Such additional information as required by the Zoning Ordinance appropriate to the proposed use.

CERTIFICATION:

I certify that all of the information presented by me in this application and in its accompanying attachments is accurate to the best of my knowledge, information and belief.

NORTH CAROLINA PROFESSIONAL SEAL 19347 ENGINEER GARY JOSEPH CAHILL

Signature

G. J. Cahill, P.E.

Agent

6/20/94

Date

FOR PLANNING DEPARTMENT USE ONLY

1. Date received _____

2. Placed on agenda for (date) _____

3. On-agenda notice to applicant (date) _____

4. Date legal ad published in newspaper _____

   (5 days prior to hearing) _____

5. Date property owners within 100 feet notified by regular mail

   (at least 7 days prior to hearing) _____

6. Action by the Board:

   Approved _____

   Approved with conditions _____

   Denied _____

7. Date order sent by certified mail to applicant _____

NORTH CAROLINA ::
WILSON COUNTY ::

THIS DEED, made this 23rd day of January, 1973, by W. Boswell and wife, Mildred B. Boswell, of the County of Wilson State of North Carolina, parties of the first part, to Wilson County, a municipal corporation, party of the second part:

W I T N E S S E T H:

THAT FOR AND IN CONSIDERATION of the sum of Ten Dolla ($10.00), paid to the parties of the first part by the party c the second part, the receipt of which is hereby acknowledged a other valuable consideration, the said parties of the first pa have given, granted, bargained, sold and conveyed, and do, by these presents, give, grant, bargain, sell, and convey unto th said party of the second part, its successors and assigns, all that lot or parcel of land lying and being situate in Wilson T ship, Wilson County, North Carolina, and more particularly des ed as follows:

114

Lying on the Easterly side of the Wilson to Black Creek Road and beginning at a point in the center of the Old Black Cr Road, the A. N. Daniel Northerly corner, runs thence with the c ter of the Old Black Creek Road Northerly, with a curve to the 534 feet, a new corner in center of said road, the Ed Lamm corn runs thence with center of a new ditch, North 82 deg. 30 min. E 950 feet to intersection with another ditch, cornering; runs th with said ditch North 89 deg. 45 min. East 162 feet; North 60 d East 110 feet; North 38 deg. 45 min. East 200 feet; and South 8 deg. East 230 feet to the intersection of said ditch with the ce ter of the run of Hominy Swamp, Ed Lamm's corner; runs thence dc the center of the run of Hominy Swamp South 30 deg. 15 min. East 395 feet; and South 35 deg. East 1040 feet to a point in center the run of Hominy Swamp, the A. N. Daniel corner, corners and ru thence with the Northerly line of A. N. Daniel land North 81 deg 30 min. West 2540 feet to the point of beginning; containing thi seven acres, more or less; and being the very same property conve ed to W. T. Boswell by deed of George H. Carpenter and wife datec November 8, 1954 and recorded in Book 555, Page 189, Wilson Count Registry; IN WITNESS WHEREOF, the said [illegible] [illegible] set their hands [illegible]

And in addition, one-fourth (¼) of an acre of land, more less, adjacent to and just East of N.C. State Road #1606 as shown on map recorded in Plat Book 10, Page 70, Wilson County Registry, and being all of the real estate owned by Frankie H. Anderson and husband, H. W. Anderson, which is located just East of and between the said State Road and the W. T. Boswell farm together with any highway right-of-way included in or adjacent to said one-fourth (¼

STATE OF NORTH CAROLINA
Real Estate Excise Tax
75.00
JAN 24 '73
P.B. 10722
WILSON COUNTY
014582

acre of land, more or less; and being the very same property veyed to W. T. Boswell by deed of Frankie Anderson and husbar dated August 26, 1966 and recorded in Book 968, Page 498, Wil County Registry.

SAVE AND EXCEPT that certain easement granted to Carol Telephone and Telegraph Company by instrument dated March 20, and recorded in Book 677, Page 60, Wilson County Registry; and

SAVE AND EXCEPT that certain right-of-way acquired by t State Highway Commission by instrument dated December 17, 1969, and recorded in Book 1039, Page 358, Wilson County Registry.

TO HAVE AND TO HOLD the said lands and premises, togethe with all the privileges and appurtenances thereunto belonging or in anywise appertaining unto it, the said party of the second part, its successors and assigns, in fee simple absolute forever:

AND THE SAID PARTIES OF THE FIRST PART, for themselves, their heirs and personal representatives, covenant to and with the said party of the second part, its successors and assigns, that they are seized of said premises in fee simple and have the right to convey a fee simple title thereto; that the said lands are free of all encumbrances, and that they will forever warrant and defend the title thereto against the lawful claims of all persons whomsoever:

THE SAID PARTIES OF THE FIRST PART shall retain all crop allotments now existing upon the property hereinabove described and the party of the second part agrees to execute any documents required by the County A.S.C.S. Office.

THE SAID PARTIES OF THE FIRST PART shall have the right to remove all buildings now situate upon the property hereinabove described, with the exception of the dwelling house and cinder block pack house, the same to be completed within six months of the recording of this instrument.

IN WITNESS WHEREOF, the said parties of the first part have hereunto set their hands and affixed their seals, this the day and year first above written.

W. T. Boswell (SEAL)

Dolled B. Boswell (SEAL)

COUNTY OF WILSON

NORTH CAROLINA

OFFICE OF THE MANAGER
P.O. BOX 1728, WILSON, N.C. 27894-1728
919-399-2803

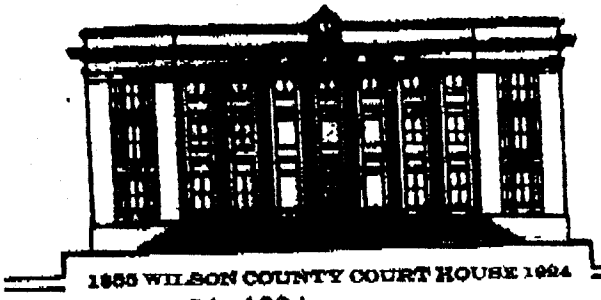

June 21, 1994

City of Wilson
Planning Department
Goldsboro Street
Wilson, NC 27893

Dear Planning Department,

Wilson County proposes to lease the property owned by the County and located on Old Black Creek Road near the Wilco Industrial Park to Carolina Energy Partnership. The property contains approximately 37 acres and is the same site as that currently used by Wilson Technical Community College for its heavy equipment training. The County purchased the property in January of 1973 (deed book 1081 page 335) and has used it continuously since.

The County would like to lease the property to Carolina Energy Partnership for a least a 26 year period in order for the Partnership to construct a municipal solid waste processing and recovery facility. Carolina Energy will construct, own, and operate the facility. It will utilize the facility in conjunction with its projects in Lenoir and Pitt Counties. The Partnership will comply with all local, state, and federal regulations governing the handling of solid waste.

The County would be most happy to provide whatever additional information you would need to look favorably on this special use application. If any member of the County staff could offer any assistance please do not hesitate to call upon us.

Sincerely,

Ellis Williford
County Manager

CITY OF WILSON
North Carolina
INCORPORATED 1849
27894-0010

Department of
Development Services

July 5, 1994

Ms. Kimberly Alanis
Vedco Energy Corporation
11757 Katy Freeway, Ste. 1420
Houston, TX 77079

Dear Ms. Alanis:

The Board of Adjustment of the City of Wilson, North Carolina wishes to inform you that your request for a Special Use Permit to operate a scrap yard used as a recycling center at 3031 Black Creek Road in an I-2 zone has been placed on the agenda for its meeting on Tuesday, July 19, 1994 at 5:30 p.m. in the Council Chambers of the Municipal Building, 112 North Goldsboro Street on the third floor. You are required to attend this meeting to present your case to the Board. Also at this meeting, persons wishing to be heard will be given the opportunity to speak either in favor of or against this request.

If you have any questions concerning this matter, please do not hesitate to call. You may contact the Planning Department at 399-2212.

Sincerely,

Patrick M. Borelli
Chief Planner

SUOA122.WP

AND INSPECTION DEPT.
OF WILSON
P. O. BOX 10
WILSON, N. C. 27893

STAFF FINDINGS — FOR YOUR INFO...

ITEM # 1 MEETING IS → JULY 19, 1994 ... AT 5:30 PM

ITEM: Request by Carolina Energy L.P. for a Special Use Permit for a "scrap yard used as a recycling center where no retail activity is conducted on the premises and where no wrecked, scrapped, ruined or dismantled motor vehicles or motor vehicle parts are stored or kept on the premises" at 3031 Black Creek Road in an I-2 zone.

CLEARED FOR DISTRIBUTION:

Post-it™ brand fax transmittal memo 7671 | # of pages ▸ 2

To KIM ALLANIS	From PAT BORELLI
Co. VEDCO	Co. CITY OF WILSON, NC
Dept.	Phone # 919-399-2212
Fax #	Fax #

TAX PARCEL: 295-1-3

SURROUNDING LAND USES AND ZONING:

NORTH	-	Farm land and house (I-2)
SOUTH	-	S. T. Wooten Corp. (I-2)
EAST	-	City sewage treatment plant (I-2)
WEST	-	Porritts & Spencer, Inc. (I-2)

SIZE OF SITE: 37 acres

ANALYSIS: This use is permitted as described in the item listing with a Special Use Permit and subject to the requirements of Section 8.23. The site easily meets the location requirements of that section. Police, Fire, and Inspections indicate approval.

Site plan approval is required before construction, and while it is not necessary prior to the Board's approval, a "preliminary" site plan was submitted to the Board to help them visualize the project. For the applicant's benefit, the following deficiencies were noted in the plan (there may be others):

1. a 15-foot firebreak completely surrounding the establishment is required <u>outside</u> the fence ... must be kept cleared and mowed ... no structures, signs, debris, parked vehicles, etc.

2. the fence along the front (facing Black Creek Road) must block visual contact of the facility and meet the requirements of Section 8.23.D ... the remainder of the fencing can be likewise or 6-foot high chain link fence.

3. gates are limited to two, 20 feet wide each, and the gates must meet the requirements of #2, above.

actually 3 gates

PLANNING AND INSPECTION DEPT.
CITY OF WILSON
P. O. BOX 10
WILSON, N. C. 27893

STAFF FINDINGS

ITEM # 1

JULY 19, 1994

In addition, the plan submitted shows a "weigh station queue" on Black Creek Road - a public right-of-way. Staff suggests the Board require that this be located on private property and that trucks using this facility be prohibited from blocking traffic on Black Creek Road.

Also, the site is not presently in the City limits. If City services are desired or required by the TRC, annexation will be required.

The rear of the site is located within the Floodway and 100-year flood plain. These boundaries must be shown on the site plan and appropriate regulations complied with.

RECOMMENDATION: Staff recommends approval subject to the following conditions:

1. that the applicant and operator of the establishment shall fully comply with all of the requirements of the order together with any other applicable state or local rules, ordinances, laws and regulations of whatever nature;

2. that if any of the conditions affixed to the permit or any part thereof shall be held invalid or void, then the permit shall become void and of no effect;

3. that this permit is granted for a scrap yard used as a recycling center where no retail activity is conducted on the premises and where no wrecked, scrapped, ruined or dismantled motor vehicles or motor vehicle parts are stored or kept on the premises, ONLY;

4. that a site plan meeting all appropriate requirements of the Zoning Ordinance, particularly those pertaining to Section 8.23, be submitted and approved by the Technical Review Committee (TRC) prior to construction;

5. that all outside storage of scrap materials shall meet the requirements of Section 8.23; and

6. that any "weigh station queue" be located on private property and that vehicles using this facility are prohibited from blocking traffic on Black Creek Road.

AGENDA
BOARD OF ADJUSTMENT
JULY 19, 1994
5:30 P.M.

APPROVAL OF MINUTES: June 21, 1994

SPECIAL USE PERMITS:

ITEM #1: Request by Carolina Energy L.P. for a Special Use Permit for a "scrap yard used as a recycling center where no retail activity is conducted on the premises and where no wrecked, scrapped, ruined or dismantled motor vehicles or motor vehicle parts are stored or kept on the premises" at 3031 Black Creek Road in an I-2 zone.

ITEM #2: Request by Steven Leder for a Special Use Permit for a used car sales lot at 302 South Tarboro Street in a B-1 zone.

ITEM #3: Request by Jannis Bynum for a Special Use Permit for a private club (Personality) at 1016 U.S. Highway 301 South in an I-1 zone.

ITEM #4: Request by Billy R. Boykin for the following: 1) to amend his Special Use Permit to operate a mini-storage facility without installing the required screening along the eastern property line as conditioned in his current Special Use Permit; and 2) for a Variance from Section 8.13.B.2 of the Zoning Ordinance to operate a mini-storage facility without installing the required screening along the rear property line. The property in question is located at 1011 Jordan Street and zoned B-4.

ITEM #5: Request by Preston Gregory for a Special Use Permit to operate mini-storage warehouses at 2716 Birchwood Lane (behind Furniture Corner) in a B-4 zone.

VARIANCES:

ITEM #6: Request by Preston Gregory for a Variance from Section 8.13.B.2 of the Zoning Ordinance to permit him to construct buildings in a B-4 zone adjacent to a RA-6 zone, without installing the required screening. The property in question is located at 2706 Forest Hills Road (Furniture Corner), 2710 and 2716 Birchwood Lane.

ITEM #7: Request by Wilson Christian Academy, Inc. for a Variance from Section 9.10.4 of the Zoning Ordinance to enable the applicant to erect a sign approximately 74 square feet in area (50 square feet is the maximum), 20 feet tall (10 feet is the maximum) and more than 50 feet from the driveway entrance (signs must be within 50 feet of entrance) at the property located at 4165 Wilson Christian Road.

OTHER BUSINESS:

ADJOURNMENT:

KENNETH L. WOODRUFF & ASSOCIATES
RESOURCE RECOVERY CONSULTANTS
182 WALTON DRIVE, P.O. BOX 42
MORRISVILLE, PA 19067
(215) 736-2194

July 18, 1994

Mr. Patrick M. Borelli
Chief Planner
Department of Development Services
City of Wilson
P.O. Box 10
Wilson, NC 27894-0010

Re: Carolina Energy, L.P.
Special Use Permit Request
3031 Black Creek Road

Dear Mr. Borelli:

On behalf of Carolina Energy, L.P., we are in receipt of and thank you for your letter dated July 5, 1994, together with the Staff Findings.

We wish to respond to the three (3) deficiencies noted in the site plan. Enclosed for your review and information is the latest updated Site Plan (dated July 15, 1994).

1. The 15-foot firebreak required outside the fence has been noted.

2. The fence along the front (facing Black Creek Road) is indicated as a screening fence to block visual contact with the facility.

3. The facility site plan indicates three (3) gates. This is required for safety purposes. The two (2) gates which are nearly side by side provide for one-way truck traffic (one for ingress and one for egress). These will be open during normal working hours. The third gate (to the south) will be a normally closed mechanized gate for personnel and visitors. Entry will be via access card or remote control.

It should also be noted that the applicant does desire water and sanitary sewer services from the City of Wilson, but proposes to generate its own electricity to meet the 3 to 4 MW demand from refuse-derived fuel (RDF) produced on-site. The facility is a part of and supports the recycling and solid waste reduction services to be performed on behalf of Wilson County pursuant to North Carolina Senate Bill 111.

The weigh station queue is proposed to be located on-site, not within the 60 foot right-of-way of Black Creek Road. The Queue lane will be separated from the Black Creek Road right-of-way by a curb and/or island.

We look forward to working with you and your staff on the implementation of this important project.

Please do not hesitate to call should you have questions or require additional information.

Very truly yours,

Kenneth L. Woodruff

KLW/ktw

Enclosures

c: K. Alanis - VEDCO Energy Corp.

CITY OF WILSON
North Carolina
INCORPORATED 1849
27894-0010

Department of
Development Services

July 28, 1994

Kenneth L. Woodruff and Associates
Post Office Box 42
Morrisville, PA 19067

Dear Mr. Woodruff:

On July 19, 1994, the Board of Adjustment for the City of Wilson, North Carolina approved a request by Carolina Energy L.P. for a Special Use Permit for a "Scrap yard used as a recycling center where no retail activity is conducted on the premises and where no wrecked, scrapped, ruined or dismantled motor vehicles or motor vehicle parts are stored or kept on the premises" at 3031 Black Creek Road in an I-2 zone subject to the following conditions:

1. that the applicant and operator of the establishment shall fully comply with all of the requirements of the order together with any other applicable state or local rules, ordinances, laws and regulations of whatever nature;

2. that if any of the conditions affixed to the permit or any part thereof shall be held invalid or void, then the permit shall become void and of no effect;

3. that this permit is granted for a scrap yard used as a recycling center where no retail activity is conducted on the premises and where no wrecked, scrapped, ruined or dismantled motor vehicles or motor vehicle parts are stored or kept on the premises, ONLY;

4. that a site plan meeting all appropriate requirements of the Zoning Ordinance, particularly those pertaining to Section 8.23, be submitted and approved by the Technical Review Committee (TRC) prior to construction;

5. that all outside storage of scrap materials shall meet the requirements of Section 8.23; and

6. that any "weigh station queue" be located on private property and that vehicles using this facility are prohibited from blocking traffic on Black Creek Road.

An official "order" detailing this approval will be issued at a later date, but the approval is considered effective as of July 19.

If I can be of further assistance, please let me know.

Sincerely,

Patrick M. Borelli
Chief Planner

FAX: Kimberly Alanis

SCOPE OF WORK AND DESIGN BASIS FOR WILSON COUNTY MATERIALS RECOVERY FACILITY

PARAGRAPH	TITLE
1.00	INTRODUCTION
2.00	DESCRIPTION OF MRF
3.00	SITE CONDITIONS
4.00	CODES AND STANDARDS
5.00	DESIGN BASIS
6.00	MRF PROCESSING
7.00	METALS SHREDDING
8.00	MAJOR EQUIPMENT TO BE FURNISHED
9.00	AUXILIARY SYSTEMS
10.00	BUILDING SERVICES
11.00	ELECTRICAL SYSTEM
12.00	INSTRUMENTATION AND CONTROLS
13.00	CIVIL/STRUCTURAL
14.00	ARCHITECTURAL CRITERIA
15.00	OWNER SUPPLIED EQUIPMENT AND MATERIALS
16.00	SPARE PARTS AND SPECIAL TOOLS
17.00	TRAILER PARK
18.00	OFF-SITE WORK

NEW SECTION 2

1.00 INTRODUCTION

1.01 The purpose of this SECTION is to define the Project Scope and a level of quality to the Contractor which must be met in his implementation of the detailed design of the project. No waiver or relaxation of the requirements contained in this SECTION will be permitted without the express written consent of the Owners.

1.02 The Wilson County Materials Recovery Facility (MRF) shall consist of buildings and related appurtenances to which Municipal Solid Waste (MSW) is delivered. The MSW will be processed at the facility to separate combustibles from non-combustibles utilizing a materials handling system and related materials separating machinery designed for this purpose. The processed combustible products will be trucked from the MRF as refuse derived fuel (RDF) for combustion in the boiler of an Energy Generating Facility (EGF). The MRF buildings provided shall include facilities with utilities required to accommodate personnel working at the MRF.

1.03 In addition to processing MSW into RDF and recoverable products, the MRF site shall also include a metals shredding facility (MSF) which will receive ferrous and bulky aluminum from this MRF and other MRFs. The MSF shall also receive bulky metal items and appliances (i.e. "white goods") for processing. The shredded metals shall be trucked off site. Non-metallic material shall be returned to the MRF for processing into RDF.

1.04 The Contractor may provide alternative arrangements to the design described in this SECTION provided that the standard of quality and operational flexibility described herein are maintained. Alternatives which enhance reliability and operational flexibility are encouraged.

1.05 The Wilson County MRF site shall also house the Wilson EGF which will burn RDF fed directly from the MRF. The Wilson EGF will interface with the MRF for supply of water, fuel and start-up power. The MRF will in turn receive electricity and waste water from the Wilson EGF. The design of the MRF shall provide the infrastructure to deliver and receive utilities from the EGF. The scope of the Wilson EGF is described in SECTION Nos. 0058 and 0059.

2.00 DESCRIPTION OF MRF

2.01 The Wilson County MRF will be located on a site on State Road 1606 south of Wilson, N.C. The MRF will receive approximately 400,000 tons/year of Municipal Solid Waste (MSW) from Wilson, Lenoir and other Counties and through automatic and manual sorting will remove recyclable materials. The remaining combustible materials, estimated at 320,000 tons/yr will be processed at the MRF into refuse derived fuel (RDF) for combustion and steam production at this and other sites. It is anticipated that 190,000 tons/yr of RDF will be burned at the Kinston EGF which is in the overall scope of this project (see SECTION 0050). Approximately 43,000 tons/yr will be burned on-site at a the Wilson EGF which is also in the scope of

this project. The balance of the RDF will be burned at other locations or be landfilled.

2.02 The MRF site will be leased from Wilson County for a period of 20 years.

2.03 It is intended that by-pass, residue and excess RDF output from the MRF be landfilled and recyclables sold by the MRF. All of the RDF (other than RDF burned on site) will be compacted onto live bottom transfer trailers and transported to users of the RDF or be landfilled.

2.04 The MRF shall have two main processing lines and be capable of operating either process line independently or both lines simultaneously at full capacity. Conveyors, drives and other equipment shall be sized to permit all modes of operation. Collection and separation of fines from the trommels are common to both process lines.

2.05 Blue bags shall be separated from the MSW processing streams and conveyed to a storage area. The stored blue bags will be processed separately when the storage area reaches maximum capacity.

2.06 The MSF shall be separate from the MRF but shall receive ferrous, bulky ferrous and bulky aluminum from the MRF. Non-ferrous combustible material shall be returned to the MRF from the MSF. The MSF shall also receive bulky metals and appliances from off-site sources. Appliances will be pre-processed on site for removal of CFC's from refrigeration units prior to shredding. Collected CFC will be removed from the site and returned to authorized processors. Both mixed ferrous and aluminum material will be shred (separately) in the single metals shredder. Shredded ferrous, aluminum, and mixed non-ferrous scrap will be trucked off of the site individually.

3.00 SITE CONDITIONS

3.01 The MRF site with boundaries are shown on the layout drawings.

3.02 For purposes of design, the ambient dry bulb temperatures shall be:

92°F - Maximum
22°F - Minimum

3.03 Design wet bulb temperature shall be 76°F.

3.04 Design for wind shall be in accordance with the NCS Building Code. Design wind velocity is 80 miles per hour.

3.05 Design for snow loading shall be in accordance with the NCS Building Code for snow load.

3.06 Site drainage shall be designed for 100-year storm.

3.07 Seismic design for all buildings, structures and components shall be in accordance with the NCS Building Code for earthquake loads. Site is located in Seismic Risk Zone 0.

3.08 Site elevation is approximately 100 ft above mean sea level.

3.09 The site arrangement shown on the drawings is conceptual in nature and may be modified by the Contractor to optimize utilization of the facility.

3.10 Borings shall be taken at the site by the Contractor for final design. For bidding purposes, foundation design shall be based on soil loading of 3000 pounds per square foot.

3.11 Contractor shall not construct any structures in the 100 year flood area as designated on the drawings.

4.00 CODES AND STANDARDS

4.01 The design, manufacture, erection and start-up of equipment and systems shall be in accordance with governing Codes and Standards.

4.02 The governing Codes and Standards shall be those that are in effect at the time the Contract is signed. When two or more codes describe a given requirement, the more strict requirement shall be used.

4.03 All applicable local, state and federal requirements and permit conditions shall be complied with by the Contractor unless specified otherwise. Use of asbestos shall not be permitted for any application.

4.04 The detailed design of each system and equipment specification shall contain reference to the specific code or standard to which the item is designed. In general, the following Codes and Standards shall apply.

- American Society of Mechanical Engineers (ASME)
- National Solid Waste Management Association (NSWMA)
- Solid Waste Association of North America (SWANA)
- American Society of Civil Engineers (ASCE)
- American National Standards Institute (ANSI)
- a. Dimensional Specifications as applicable
- American Society of Testing and Materials (ASTM)

  a. Material Specifications as applicable
  b. Sampling and Testing Standards as applicable
  c. RDF - ASTM E1126-87

- American Chain Association (ACA)
- American Welding Society (AWS)
- American Water Works Association (AWWA)
- American Iron and Steel Institute (AISI)
- Crane Manufacturers Association of American (CMAA)
- Thermal Insulation Manufacturers Association (TIMA)
- National Fire Protection Association (NFPA)
  - a. National Electrical Code
  - b. Fire Protection Codes as appropriate
- Institute of Electric and Electronics Engineers (IEEE)
- National Electrical Manufacturers Association (NEMA)
- National Electrical Safety Code (NESC)
- American Association of State Highway and Transportation Officials (AASHTO)
- Steel Structures Painting Council (SSPC)
- American Institute of Steel Construction (AISC)
- American Concrete Institute (ACI)
- American Society of Heating, Refrigerating, and Air Conditioning Engineers (ASHRAE)
- Manufacturers Standardization Society (MSS)
- Metal Building Manufacturers Association (MBMA)
- Compressed Air and Gas Institute (CAGI)
- Conveyor Equipment Manufacturers Association (CEMA)
- Industrial Gas Cleaning Institute (IGCI)
- Uniform Building Code (UBC)
- Instrument Society of American (ISA)
- Environmental Protection Agency (EPA)

- Occupational Safety and Health Administration (OSHA)
- State of North Carolina Building Codes (NCS Building Codes)
  - a. Sanitary Code
  - b. Erosion Control Code
  - c. State Building Code
  - d. Plumbing Code
  - e. Fire Protection Code
- Factory Mutual System (FM)
  - a. Handbook of Industrial Loss Prevention
  - b. Factory Mutual Approval Guide
- Underwriters Laboratories Inc. (UL)
  - a. UL Products Lists (where not FM listed)

5.00 DESIGN BASIS

5.01 The MRF shall be constructed in two abutting buildings both approximately two stories high. The first building will be the MSW receiving operation which will house a tipping floor to receive MSW and process the MSW into the second building. The second building will process the MSW into RDF and recyclables. The process buildings shall originate at grade and support materials handling equipment from that elevation. Picking stations and related equipment shall be elevated on steel platforms as required to permit rapid unloading of collectibles.

5.02 The MRF shall be designed with emission controls to ensure that the facility complies with all applicable laws and regulations governing air quality odor and noise emissions.

5.03 The MRF shall be designed with two trommel lines, each with a capability to process a minimum of 60 tons/hr (TPH) of MSW (municipal solid waste) delivered by trucks to the MRF, during two ten hour shifts, six days per week.

5.04 Conversion to RDF (refuse derived fuel) is expected to be about 80 percent of the incoming MSW. The MRF shall be capable of processing 10,000 tons of MSW/week plus all of the non-metallic material from the MSF.

5.05 Commercial, municipal and private refuse will be accepted at the MRF. Toxic, hazardous and medical wastes are not acceptable wastes and if

inadvertently dumped at MRF will be separated and segregated prior to processing for removal by a licensed hauler.

5.06 An initial screening of MSW delivered by the Counties will take place at the MSW receiving building. MRF employees will separate most bulky items, such as furniture, tires, appliances, etc. Front-end loaders (furnished by others) will load the refuse onto one of two slow moving pit apron conveyors which will convey the Acceptable Municipal Waste from the MSW receiving building to the RDF process building.

5.07 The MRF shall be provided with a dust collection system to control dust and odors. The MSW receiving building shall supply air to the RDF process building. The exhaust of such system to the atmosphere shall comply with the requirements of regulatory agencies having jurisdiction.

5.08 A suitable fire protection system shall be provided in the MRF which complies with all local state and federal requirements and other agencies having jurisdiction.

5.09 The MRF design shall include hoists, monorails, and lifting devices to facilitate servicing components of process equipment where experience has shown such lifting equipment to be required.

5.10 The MRF shall provide access for the forklift (by others) and front-end loaders (by others) to enter and exit the MRF.

5.11 The detailed design for each line of the MRF to produce RDF shall comply with requirements listed.

A.	Process Capacity:	60 TPH (plus metals shredding combustibles)
B.	On-Line Availability:	85%
C.	Ferrous Removal:	90%
D.	Glass/Grit Removal:	85%
E.	Electro/Mech Aluminum Recovery:	65% of aluminum cans
F.	Plastic Container Recovery	40%

G. Manual Picking Stations:

1. Picking Station Nos. 1 and 2 shall be located prior to MSW entry into the sizing devices (Trommel Nos. 1 and 2) to allow removal of bulky waste and separation of Blue Bags, corrugated cardboard, and newspapers.

2. Picking Stations No. 5 and No. 6 shall be provided for the middle (+2" to -6") fraction from the sizing devices. These

picking stations, located downstream of magnet separators and eddy current separators shall provide for the separate removal of aluminum and plastic materials from the middle size process stream.

3. Picking Stations No. 3 and No. 4 shall be provided for the oversized (+6") fraction from the sizing devices and shall be located upstream of the magnetic separators. These picking stations shall provide for the separate removal of plastics, bulky aluminum, and large ferrous material from the oversize process stream.

4. The design shall provide for 60 tons of Blue Bag storage fed from Picking Station Nos. 1 and 2.

H. Fines Separation:

Fines (-2") from the sizing devices (trommels) shall be combined into a single stream, pass-through a magnetic separator, the first destoner, crusher, screen and second destoner. Organic material will be conveyed to the Wilson EGF or recombined into the RDF stream. The heavy material will be separated into rejects and aggregate streams.

5.12 Bulky items not suitable for processing and rejects from the fines stream will be trucked off-site to a landfill.

5.13 Bulky items suitable for metals shredding and separated ferrous material from the MRF will be loaded into roll-off bins and sent to the MSF along with similar type material trucked in from off site. The MSF shall receive, store and pre-process (i.e. remove CFC's from refrigeration units) ferrous, non-ferrous and bulky aluminum prior to entry into the shredder.

5.14 The metals shredder process line shall be designed to handle 25 tons/hr on a 10 hour/day, six days a week basis.

5.15 Metals recovery from the metals shredder is expected to be 75% of the incoming stream. Non-metallic material shall be loaded into roll-off bins and shall be recycled at the MRF with shredded ferrous, non-ferrous and aluminum trucked off of the site.

5.16 Dust suppression in the metals shredder shall be by a water spray quench.

5.17 The site design and infrastructure shall include a RDF-fired power plant. The power plant will be located generally as shown and will consist of a 125 x 10^6 Btu/hr BFB type boiler supplying steam to an 8000 kW (nom.) condensing steam turbine generator. The generator will be used to off set power purchases from the electric utility. The power plant will have a mechanical draft type cooling tower. Fuel supply to the power plant will be

from the organic and RDF streams. The site electrical distribution system and water supply shall provide for the power plant.

5.18 Blue Bags will be processed separately by removal from storage and reentry onto either process line for recovery of recyclables.

6.0 MRF PROCESSING (See Dwg. Nos. D-071-031-F1, 2 and -M1)

6.01 MSW Receiving

A. Trucks entering and exiting the site shall pass over attended truck scales. The scales shall be automated and tied to the Central Control System (CCS) to provide for computer based material flow control and invoicing.

B. The MRF shall be equipped with an eight bay tipping floor in the MSW receiving building with 14250 ft^2 (min.) of usable storage space (not including truck access to the infeed conveyors).

C. The infeed to each trommel line shall consist of two metal apron conveyors. The first conveyor shall be below the tipping floor level and shall cascade a minimum of six feet to a second apron conveyor which will incline to the RDF processing building. One stationary knuckleboom crane shall be located downstream of the cascade points and will remove oversized bulky waste (OBW) and metallic reject items from each stream. Two roll-off bins shall receive the OBW for metals shredding and rejects for landfill disposal. A third roll-off bin will be used as a spare. Two more roll-off bins will be used in the RDF processing building to receive bulky waste from Picking Station Nos. 1 and 2.

D. The roll-off bins shall be removable from the MSW receiving building without interfering with receipts of MSW.

E. The two roll-off bins located in the RDF processing building shall be removable without interfering with the processing of the RDF.

6.02 Picking Station Nos. 1 and 2

A. Acceptable MSW shall be received into the RDF processing building on the two apron conveyors described above and pass through Picking Station Nos. 1 and 2 which are identical and operate in parallel.

B. The first position shall remove any remaining items not suitable for processing that were not picked off of the line by the knuckleboom crane. The reject items will drop into roll-off bins located directly below the picking stations.

C. The second position shall remove Blue Bags which will be conveyed directly to the Blue Bag storage area.

D. The third position shall be for corrugated cardboard which will be held in a storage (or hopper) type conveyor under the picking station until sufficient material is collected for baling.

E. The fourth (and last) position shall be for newspaper removal. This position shall also have a storage type conveyor identical to that used under the third position.

F. Both newspaper and corrugated cardboard storage conveyors shall feed a common baler.

G. All equipment down stream of Picking Station Nos. 1 and 2 shall be sized based on Picking Station Nos. 1 and 2 not being in service.

6.03 Trommels

A. Each trommel shall be identical and will size the material into three process streams, overs (+6" material), middles (+2 to -6" material) and fines (-2" material).

B. The two overs streams shall be conveyed separately to Picking Station Nos. 3 and 4.

C. The two middle streams shall be conveyed separately to Picking Station Nos. 5 and 6. Prior to entering the picking stations each middle stream shall pass through magnetic and eddy current separators for ferrous and aluminum removal.

D. The fines from each trommel shall be combined together for entry into the fines processing system.

E. Each trommel shall be connected independently to the dust collector system.

6.04 Picking Station Nos. 3 and 4

A. The overs from each trommel shall feed directly to each of these picking stations.

B. The first position shall be for removal of bulky ferrous items which will not be picked up by the magnetic separators located downstream of the stations. Picked material shall be taken directly to the ferrous removal conveyor.

C. The second position shall be for plastic which will be conveyed directly to the plastic perforator/baler.

D. The third position shall be for removal of bulky aluminum components. These will be chuted directly to the boxes under the Picking Station.

6.05 Picking Station Nos. 5 and 6

A. The middle stream from each trommel shall feed each of these picking stations after ferrous and aluminum separation.

B. The first position shall be for removal of aluminum cans not recovered by the eddy current separator. A chute shall connect from the Picking Station to the aluminum conveyor.

C. The second position shall be for removal of plastic which will be conveyed directly to the plastic perforator/baler.

6.06 Fines Processing Line

A. Fines from both trommels shall be combined as feed stock to the fines processing system.

B. Prior to entry into the first stoner operation, the fines stream shall pass through a ferrous separator.

C. Stoner No. 1 shall receive all fines and separate them into light (organic) and heavy (aggregate) streams. The organics stream shall be recombined with the RDF stream either prior to entry into the Wilson EGF's fuel storage building or prior to the RDF compactors. Aggregates from Stoner No. 1 shall pass directly to a crusher for size reduction to 1/2" material.

D. Crushed aggregate material shall be screened prior to entry into the second stoner. The screen shall separate the aggregate into three streams. Overs (+ 1/2") and fines (-1/8") shall be conveyed to rejects bins outside the RDF processing building. Middles (+ 1/8" to -1/2" size) shall pass to the second stoner.

E. Stoner No. 2 shall receive middles from the above screen and further refine the aggregate. Light material shall be conveyed to the reject bins outside the RDF processing building and the heavy aggregate shall be conveyed to separate roll-off bins also located outside of the building.

F. Both stoners shall be individually connected to the dust collection system.

G. All fines conveyors located outside of the RDF processing building shall be covered and protected from the elements.

6.07 Ferrous Removal

A. Ferrous material shall be removed from all process streams as follows.

(1) Trommel Overs - A self-cleaning magnet on each line downstream of Picking Station Nos. 3 and 4.

(2) Trommel Middles - A self-cleaning magnet on each line upstream of Picking Station Nos. 5 and 6.

(3) Fines Process - A self-cleaning magnet upstream of Stoner No. 1.

(4) By a head pulley magnet upstream of the aluminum baler.

(5) Each eddy current separator shall feed the ferrous removal system via its ferrous chute.

(6) Manual feed of bulky ferrous from Position No. 1 on Picking Station Nos. 3 and 4.

B. The arrangement of equipment shall provide for conveying of all removed ferrous material to the ferrous roll-off bins located outside of the RDF processing building.

6.08 Aluminum Removal

A. Non-bulky aluminum material shall be removed from the following process streams:

(1) Trommel Middles - An eddy current separator on each line upstream of Picking Station Nos. 5 and 6.

(2) Trommel Middles - Manually fed chutes from Position No. 1 on Picking Station Nos. 5 and 6.

B. The arrangement of equipment shall provide for conveying of all removed material through a cleanup station and magnetic head pulley prior to entering the single aluminum baler.

6.09 Plastic Removal

A. Plastic material shall be hand picked at the following locations:

(1) Position No. 2 on Picking Station Nos. 3 and 4

(2) Position No. 2 on Picking Station Nos. 5 and 6

B. The plastic shall be conveyed separately to its own perforator/baler station.

6.10 RDF Stream

A. Material not separated from the process streams as described above shall be conveyed into the two RDF streams where it may be: shred, compacted and removed from the site; shred, bypassed around the compactor and removed from the site; or shred and a portion of the RDF stream conveyed to the Wilson EGF's RDF storage building. Feeds to the RDF system are:

(1) Trommel middles from Picking Station Nos. 5 and 6.

(2) Trommel overs from Picking Station Nos. 3 and 4.

(3) Organics from Stoner No. 1.

B. The arrangement of conveyors, chutes and flop gates shall be such that either input stream can feed either RDF streams.

C. Each RDF stream shall feed a separate RDF shredder capable of 60 TPH input capacity. Each shredder shall be provided with a separate enclosure for blast protection. Both shredders shall be individually connected to the dust collection system.

D. Each RDF shredder shall discharge to either a compactor or bypass line. Chute/conveyors shall provide for either RDF shredder to feed either compactor.

E. Each compactor shall be designed to load up to 25 tons of RDF onto the self-unloading type trailers. RDF shall be compacted prior to loading into the trailers. The compactor/trailer interface shall provide for a positive locking mechanism and be designed to eliminate spillage of RDF during loading.

F. Each RDF stream shall be equipped with a surge-type bin located between the shredder and compactor.

G. Material bypassed around the compactor will either be loaded directly onto trailers for removal from the site, or conveyed to the Wilson EGF's RDF storage building. Prior to entry into the RDF storage building, the RDF stream will be recombined with the organic stream recovered from the fines stream.

H. All RDF streams located outside of the MRF processing building and the Wilson EGF's RDF storage building shall be covered and protected from the elements.

6.11 Baled Recyclable Materials

A. Newspaper, cardboard, aluminum and plastic shall all be individually baled. The RDF process building shall be arranged to permit in-building storage for each of the four baled products in sufficient quantity to load two 45' long trailers.

B. Baled materials may be moved from individual balers to storage using a forklift truck (by others).

C. Two loading docks shall be provided for load-out of baled products via truck/trailer. Trucks will be loaded by means of forklift to a walking bed floor in each trailer.

6.12 Bulk Recyclable Materials

A. Bulky aluminum, ferrous scrap, aggregate, and metallic OBW shall all be removed from the MRF in bulk (i.e. roll-off) containers.

B. Metallic OBW, ferrous scrap and bulky aluminum suitable for metals shredding will be taken from the MRF to the MSF. Separate roll-offs shall be provided for each type of material.

C. Outdoor roll-off bins shall be provided for ferrous scrap and aggregate and shall be loaded directly by covered conveyors from the MRF.

D. A staging area for holding at least six roll-off bins shall be provided.

6.13 Rejects

System reject material will be limited to bulky items from the infeed to the plant (knuckleboom crane and Picking Station Nos. 1 and 2) and fine reject from the fines screening process and dust separators. All of the rejects will be trucked off the site.

6.14 Dust Control (see Dwg. No. D-071-031-F4)

A. The MRF shall be provided with a single dust collection system which will have the following objectives:

1. Control the emission of odor from the MSW receiving area and EGF fuel storage area.

2. Provide dust removal from the trommels, stoners and RDF shredders.

3. Control dust emissions from transfer points.

B. Approximately 40,000 cfm will enter the RDF processing building from the MSW tipping floor area. An additional 25,000 cfm will enter

the RDF processing building through building louvers. From the approximately 65,000 cfm entering the RDF processing building, 24,000 cfm shall enter the destoners, 22,000 cfm shall enter the trommels, and 19,000 cfm shall be ducted to the RDF shredders. In addition to the 19,000 cfm from the processing building, the RDF shredders shall receive an additional 5,000 cfm from the Wilson EGF's RDF storage building.

C. Two identical fan/dust collector units shall be provided with a maximum air flow of 35,000 scfm each. Each dust collector shall exhaust to the atmosphere via a separate 175 ft high stack.

6.15 Weigh Station

A. The site shall be provided with one weigh station containing two separate scales. The first scale shall weigh all MSW trucks on their entry to the site as well as scrap metal trucks from outside sources.

B. The second scale shall weigh trucks leaving the site with recycled material, rejects, and shredded metals.

C. The weigh station shall be provided with controls suitable for monitoring and recording truck flow. NEMA-4 magnetic card readouts shall be provided for incoming and outgoing vehicles. Data to be recorded shall include the following as minimum:

(1) Time and Date of Truck Loading/Unloading
(2) Net Weight of RDF or Recycled Product
(3) Truck Identification Number
(4) Minimum of 45 days of Data Storage

D. System shall provide a receipt to the trucker.

7.00 METALS SHREDDING (See Dwg. Nos. D-071-031-F3 & C4)

7.01 Scrap Metals Receiving

A. Both ferrous and aluminum scrap will be trucked to the metals shredder area. All trucked material from both on-site and off-site sources will be unloaded in a receiving building onto a tipping floor for separation of items requiring processing prior to shredding.

B. The pre-shredding process shall include inspection and removal of CFC's from refrigeration units. Contractor shall supply a vacuum pump and CFC holding tank designed specifically for this purpose.

C. The arrangement of the MSF shall provide for covered storage of ferrous material to support a three-day run of the shredder at full capacity. Aluminum storage shall be sufficient for a single four-hour run at full capacity. Storage areas shall be provided with concrete push walls.

7.02 Metals Shredder Infeed System

A. Scrap material shall be pushed from the storage areas to a below-grade apron conveyor which will elevate the scrap for feed into the downward inclined (30°) shredder infeed chute. Infeed system shall be at least 80" wide.

B. The point at which scrap is fed into the system shall be covered. Other equipment may be outdoors.

7.03 Metals Shredder

A. The metals shredder shall be specifically designed for this class of service and be equipped with a 1200 HP (min.) D.C. electric motor drive with variable speed capability. The drive system shall be suitable for future addition of an additional drive motor. The shredder shall be provided with replaceable alloy type hammers, infeed hopper and discharge hopper. Universal Engineering Model 6080 is acceptable.

B. The metals shredder infeed shall be a double feed roll-type compressor feeder.

C. The metals shredder grates shall be replaceable and be suitable for adjusting the size of the shredded material. The grates shall be designed to shred metal to -4" size and 60 lb/ft^3 when shredding municipal ferrous scrap.

D. The shredder discharge shall be carried away from the shredder outlet chute by means of a vibrating type feeder which discharges to a belt type transfer conveyor.

E. The metals shredder shall be equipped with spray nozzles which can accept water for dust suppression, cooling and inerting of the shredder.

F. All shredder related equipment shall be specifically designed to withstand explosion and be of materials which will provide long operating life.

G. The design and layout of the metals shredder equipment shall be suitable for the future installation of a dust collection system.

H. A heavy duty hydraulic pin puller shall be provided with the unit.

7.04 Metals Cleaning System

A. The shredded metal shall be separated from the light fraction in the process stream by means of a low air velocity, high volume cascade

separation system designed specifically for this purpose. The cleaning air shall blow counter to the process stream and be in a closed loop system. The cascade chute shall have a minimum width of 36".

B. The system shall be equipped with circulating fan, cascade chamber high efficiency cyclone, recirculation system, bleed-off stack and wet scrubber. The bleed-off stack shall discharge 125 ft above grade and vent no more than 5,000 cfm.

C. Heavy material (i.e. cleaned metal) shall be taken from the cleaning system by a vibrating conveyor.

D. Waste material (light fraction) shall be taken from the cyclone separator to a covered storage area containing two roll-off type bins. Bins will be trucked back to the MRF for further processing of the light fraction.

E. The system's air recirculation system shall allow for varying air flow through the cascade cleaner to account for type, density and size variations in the shredded metal processed.

7.05 Magnetic Separation

A. Final clean-up of ferrous material shall be accomplished by means of an electro-magnetic drum separator. The unit shall be provided with its own silicone rectifier for supply of DC power to the magnetic coil. Magnetic drum separator shall have a minimum size of 42" diameter by 60" wide.

B. The mixed non-ferrous stream shall be conveyed from the magnetic separator to a storage area where it will be loaded into open top trailers by a front-end loader. A magnetic head pulley shall be included in this conveyor to catch any tramp ferrous material which shall be chuted back to the shredded ferrous stream.

7.06 Ferrous Storage and Load-Out

A. Ferrous material from the magnetic separator shall be fed onto a radial type stack-out conveyor. The stack-out conveyor shall be designed to load directly into top loading trailers or into yard storage. Material stored at grade will be top loaded into trailers by a front-end loader.

B. Storage of shredded ferrous shall be provided for five full days of operating capacity. The storage area shall be provided with push walls and curbed to contain rain runoff.

C. The stack-out conveyor shall be provided with two manual picking locations for optional use by the operator.

7.07 Containment

A. The metals shredding yard shall be isolated from the MRF area by means of a 15 ft high earthen berm.

B. All metals storage areas shall be diked and/or sloped to collect rain water. All drains (both indoor and outdoor) shall be run to an oil/water separator system prior to discharge. Load-out areas shall be provided with push walls.

8.00 MAJOR EQUIPMENT TO BE FURNISHED

8.01 The following MRF equipment suppliers are acceptable to the Owners for the type of equipment indicated.

A. Trommels (min. 10' diameter) - Triple/S Dynamics, Heil Engineered Systems, American Pulverizer.

B. Steel Apron Conveyors - Mayfran Inc., Rexnord, Hustler Conveyors, Heil Engineered Systems, Rader.

C. Rubber Belt Conveyors - Rexnord, Hustler Conveyors, Heil Engineering, Rader.

D. Balers - American Baler Company, Selco Corp., Mosley, Bollegraaf

E. Plastic Perforators - Prodeva, CP Manufacturing, Bollegraff

F. Magnets - Eriez Magnetics, Dings, Sterns

G. Eddy Current Separators - Eriez Magnetics, Linderman, Osborne, Steinert

H. Compactors - Harris/Amfab, Marathon Equipment, 50 TPH minimum rating.

I. Baghouse and Fan - Staclean, American Air Filter, Busch

J. Truck Scales - Fairbanks, Toledo, Thurman

K. Picking Stations - By Contractor

L. RDF Shredders - Universal Engineering, Model No. 6080; Jeffery Mfg., Model No. 873; American Pulverizer, Model No. 6060

M. Crusher/Grinders - Andella Tool & Machine, CP Manufacturing, American Pulverizer

N. Screen -Triple/S Dynamics, General Kinematics, Simplicity Mfg.

O. Stoners - Triple/S Dynamics

P. Bag Opener - Deleted

Q. Track Sorter - Deleted

R. Walking Floors - Keith, Hallco

S. Cranes - Preritice, Model No. 620

8.02 The MSF shall be supplied by a subcontractor experienced in the design of such systems. Acceptable subcontractors are: Osborn Engineering Inc. or American Pulverizer Company.

8.03 Conveyors shall be provided with skirting as required to minimize spillage. Cleats shall be provided to eliminate slippage on an as-required basis. Variable speed drives shall be used to the maximum extent possible.

8.04 Contractor's design shall standardize components to the maximum extent possible. Conveyor widths for a type of belting or metal leafs shall be standardized to the extent practicable. Standardization shall include motor types, conveyor components, drive units etc., to reduce maintenance inventory requirements.

8.05 All non-metal conveyor belts shall be equipped with wing type self-cleaning tail pulleys with a minimum diameter of 18 inches.

8.06 No conveyor shall be provided with a drive motor of less than 1 HP.

8.07 Where practical, metal chutes may be substituted for conveyors.

8.08 Flop gates shall be provided with pneumatic operators and electric position switches for remote operation and indication.

8.09 Multiple types of equipment (e.g. trommels, balers, compactors, etc.) shall be provided by a single manufacturer and be the same model to the maximum extent practical.

8.10 Separate paper, aluminum and plastic balers shall be provided. Each of these balers shall be of the horizontal, open end, automatic wire tie type.

8.11 If electronic type variable speed drives are provided, all electronic control units shall be located in a single electrical room.

8.12 <u>RDF Shredders</u>

A. Motor drive for each unit shall be 1000 HP, minimum.

B. Operating speed shall not exceed 900 RPM.

C. Each unit shall be provided with a circulating lubrication system with bearing temperature probes and monitors.

D. The rotor shall have replaceable spider tips and discs with replaceable caps.

E. Liner plates shall be 2" minimum thickness.

F. Each unit shall provide for the installation of a Fenwall type explosion suppression system.

G. A hydraulic pin puller shall be provided.

H. Contractor shall make an effort to match the model of the RDF shredders to the metals shredder.

9.00 AUXILIARY SYSTEMS

9.01 Compressed Air

A. The compressed air system shall supply air to the following systems:

- MRF Service Air/Automotive Air
- Metals Shredding Area
- Maintenance Service Building

B. The compressed air system shall consist of two compressors. Air intakes shall be indoors and shall be equipped with air filter silencer. An aftercooler with moisture trap and appropriate oil and particulate filters shall be provided.

C. Two identical 100% non-lubricated type electric motor-driven air compressors shall be provided. Each air compressor shall be sized for the required service but shall have a 20% flow design margin over that calculated at 125 psig minimum discharge pressure. An air receiver, 300 gallon minimum, shall also be provided.

D. Controls shall provide for automatic unloading, shutdown, start-up and backup features.

E. The service air header pressure shall be controlled by the receiver pressure which is maintained by the load/no load type compressor regulator.

F. An air header shall be provided to conveniently locate connection points for MRF building equipment maintenance. A gas station type air regulator shall be provided which shall permit selection of air pressure desired. A minimum of 16 outlets shall be provided in the MRF process building and four in the maintenance building.

G. The MSF may be supplied with a separate air compressor system, at the option of the Contractor.

9.02 Lifting Equipment

A. The plant design shall include providing monorails and electric hoists to service heavy items of equipment such as trommel screen plate and dust cover sections.

B. A 1-1/2 ton electric hoist and monorail shall be provided at Picking Station Nos. 1 and No. 2 to remove bulky items from the process stream.

C. Lifting equipment and monorails shall also be provided at the trommels, shredders and magnetic separators to properly serve these items of equipment.

10.00 BUILDING SERVICES

10.01 Building services include the heating, ventilating, air conditioning and plumbing systems associated with the work.

10.02 HVAC Systems

A. The Plant HVAC systems shall be designed to meet the criteria specified in Paragraph 10.03.

B. The MSW receiving area shall be ventilated by the dust collection system in the processing area.

C. Roof mounted air conditioning units shall be provided for each picking station. Thermostatically controlled heaters shall be provided in each air conditioning unit to maintain the indicated temperature.

D. A zoned pressurized forced air HVAC system shall be provided to service the office and reception and viewing areas. The system shall allow for adequate make-up air and shall provide for adequate room humidity control. The HVAC unit shall be mounted outside or on the roof of the Building.

E. Electrical equipment rooms, control rooms, lunch and conference rooms and offices shall be pressurized to minimize dust and odor intrusion. Ducted exhaust fans shall be used in toilet areas and locker rooms.

10.03 HVAC Design Conditions:

Area	Design Basis	
	Summer	Winter
Office, Administrative and Viewing	78°F, 50 percent R.H.	70°F
Toilet Areas	78°F, 50% R.H.	70°F (Ventilated)
Locker Rooms	78°F, 50% R.H.	80°F
Electronic Equipment Room	78°F with Humidity Control	70°F
Electric Room	Ventilated	60°F
MSW Processing Area	Ambient Air	Ambient Air
Picking Station Enclosures	78°F	65°F
Maintenance Areas	Ventilated	60°F (Ventilated)
MSF Receiving Area	Ambient Air	Ambient Air

Minimum Ventilation Requirements

Plant - to compensate for heat gain/loss
Office - 15 cfm/person
Control Room - 15 cfm/person
Toilets - 40 cfm/water closet or urinal

10.04 Plumbing

A. Potable Water

1. Potable water lines shall be installed to the plant from an existing municipal water supply. Water supply shall be sized to accommodate the Wilson EGF.

2. Domestic hot and cold water, drains and vents shall be provided for plumbing fixtures. Domestic water heaters shall be electric heated. Fixtures shall include water closets, urinals, lavatories, showers, mop receptor, water coolers, floor drains, roof drains, emergency showers and eye washes.

3. Refrigerated water coolers shall be provided in the office area, control rooms and in the lunch room.

4. Twelve hose bibs shall be provided around the MSW receiving and MRF processing areas to allow for hosing down the floor. Provide six hose bibs at the MSF receiving floor. Provide floor drains (6" min, size) at the above areas.

5. The plant shall be isolated from the municipal water system by a backflow preventer design approved by the County.

B. Sanitary Waste

Sanitary waste will connect via a new manhole to the existing 30" municipal waste line passing along the northern limit of the site. Contractor may elect to have more than one tie-in.

C. Floor Drains

Floor drains susceptible to oil contamination shall be connected to a site oil/water separator(s) prior to entry into sewer line. Each tie-in shall have a flow meter.

D. Storm Drains

1. Gutters and downspouts shall be provided. Downspout outlets shall be designed to eliminate ground erosion.

2. Storm run-off will be run to natural drainage areas.

10.05 Fire Protection System

A. Prior to start of on-site construction, Contractor shall prepare a fire protection plan and obtain approval by the Local Authority. Contractor shall determine the appropriate fire protection requirements to meet the insurability requirements of a plant of this type and shall use applicable NFPA codes as the definition of good engineering practice. Contractor shall determine the appropriate fire protection measures by contacting several insurers offering policies to plants of this type. Contractor shall consult with Owners to determine the final fire protection package. The system descriptions given below are intended to guide Contractor efforts and represent typical types of systems required by industrial plant insurers but do not necessarily describe the complete fire protection system required for this plant.

B. The fire protection system for the MRF shall consist of fire suppression and detection systems. This fire protection system shall include an underground fire water loop, above grade sprinklers, hose stations, portable extinguishers and a zoned fire detection system. This design shall be based on using water from the Wilson County potable water system at the available pressure. Fire pumps shall be avoided if adequate city water pressure exists.

C. The fire water loop shall supply firewater on demand to the hydrants and standpipes located at key locations around the MRF, MSF, and Wilson EGF and to the water sprinkler system inside the buildings.

D. A fire hose station standpipe system shall be installed at key areas within the plant. This system shall include open rack type hose stations equipped with hoses and nozzles suitable for safe and effective use on identified hazards and involved equipment.

E. Excluding the Control Room, fixed fire suppression systems shall be provided for the following areas as specified:

Area	Type
MSW and RDF Storage Areas	Dry Pipe Deluge
Conveyors/Shredders	Dry Pipe Deluge
Office Areas	Wet Pipe Sprinklers
Control Rooms	Portable Fire Extinguishers
Electrical Rooms	Portable Fire Extinguishers
Propane Tank Areas	Dry Pipe Deluge

F. A fire detection system shall be furnished to provide smoke detection for key building areas as well as the office areas with UV/IR fire detectors to be provided for potentially hazardous locations within the RDF processing area.

G. A fully automatic fire detection, alarm, actuation and signaling system shall be provided in accordance with NFPA 72E with annunciation in the Control Room. A central fire protection system status panel shall be provided and located in each Control Room as part of the CCS. This system shall include audible and visible alarms. An alarm in one Control Room shall be communicated to all Control Rooms. The system shall provide an alarm function to the local Fire Department. An audible and visual site alarm shall also be provided to notify personnel that a fire has been detected.

H. A wet standpipe system shall be installed in all heated buildings in accordance with NFPA-14. The systems shall be designed for Class III service. Hose stations shall be located such that all portions of each story of each building shall be within 20 feet of a nozzle when attached to not more than 75 feet of 1-1/2 inch fire hose. A combination fog spray/solid stream nozzle shall be provided at each hose rack.

I. Portable hand extinguishers shall be provided in accordance with NFPA-10 throughout the buildings to provide protection against small local fire hazards.

J. Office areas shall be provided with wet pipe sprinkler protection in accordance with NFPA-13.

K. The control rooms shall be provided with portable type hand extinguishers.

11.00 ELECTRICAL SYSTEM

11.01 General Description

A. The electrical system shall supply the electrical power required for the project. The site shall have a 4.16 kV system for supply of large motors and installation of an 8000 kW generator. Special systems shall include emergency lighting, fire alarm, telephone, computer, grounding, control and instrumentation.

B. Voltage insulation levels, interrupting capacities, continuous current capacities, circuit protection, and mechanical strengths shall be selected and coordinated in accordance with calculations and the recommendations of IEEE, NEMA, IPCEA, ANSI and NFPA. System protective devices (relays, fuses, breaker trip unit, etc.) shall be selected and coordinated to insure that the interrupter nearest the point of short circuit (or high overload) shall open first and minimize disturbances on the rest of the system.

C. All work shall conform to the latest edition of the National Electrical Code (NFPA 70).

11.02 Metering

A. Digital solid state metering equipment shall be provided to measure the amount of the power used by the entire facility and the output from the Wilson EGF.

B. All metering shall conform to the requirements of the local utility company and shall be suitable for the export of up to 6000 kW to the utility.

11.03 4160 Volt System

A. A single 7.2 kV - 4.16 kV delta-wye transformer shall supply the 4160V switchgear. The transformer shall meet the requirements of ANSI C57.12 and shall be equipped with oil level gauge, pressure vacuum gauge, dial-type thermostat and alarm contacts. Alarms shall be connected to the Control Room CCS. The transformer and switchgear shall be designed for outdoor service.

B. The 4160 volt switchgear shall consist of a grouped outdoor lineup of fused switches and motor starters. Circuit breakers shall be power vacuum breakers, draw-out type, electrically operated with D.C. close and trip. Combination starters shall be complete with full voltage magnetic starter, isolating switch and current limiting power fuses to interrupt the short-circuit current. All components shall be front

accessible, facilitating routine inspection and parts replacement. Bus bars shall be copper.

C. Motors 250 horsepower and larger shall be 4160 volts supplied from the 4160 volt metal clad switchgear.

D. Separate feeds from the 4160 volt system shall be provided to the MRF, MSF and Wilson EGF.

11.04 Low Voltage System (MRF and MSF)

A. A 4.16 kV - 480V delta-wye transformer shall supply each 480V system. The transformer shall be equipped with oil level gauge, pressure vacuum gauge, dial-type thermostat and alarm contacts. Alarms shall be connected to the Control Room CCS.

B. The 480 volt switchgear shall be of the indoor metal enclosed type, rated 480 volts, 3 phase, 3 wire, 60 hz with copper bus. The feeder circuit breakers shall be electrically or manually operated power circuit breakers with a current limiting fuse in each pole, draw-out type, with stored energy closing mechanisms, and RMS digital current sensing solid-state microprocessor based trip unit. Provide a minimum of six spaces for additional circuit breakers. Spaces shall be equipped with bus, mounting railing and all other accessories to install breaker.

C. The 480 volt motor control centers shall be of the indoor metal enclosed type for the control of 460 volt, 3 phase, 60 hz motors. Motor starters shall be a combination full voltage magnetic type starter and fused switches. Motor starters shall have three overload devices, one per phase. Each motor control center shall contain as a minimum spaces to add four NEMA size 2 starters and two NEMA size 4 starter. Spaces shall be equipped with bus, mounting railings and all other accessories required to install a starter.

D. Building power and motors 3/4 horsepower up to and including 200 horsepower shall be supplied from the 480 volt, 3-phase, 3-wire system. Small loads, convenience receptacles, incandescent lighting and motors smaller than 3/4 horsepower shall be single phase and supplied from the 208/120 volt, 3-phase, 4-wire system.

E. All 4160V feeders shall be run underground or in conduit on racks.

11.05 Distribution

A System Capacity and Design Criteria

1. The distribution system shall be designed with a sufficient capacity to carry the maximum kVA load of all systems operating simultaneously with or without the on-site electric generation. Circuit breakers shall have sufficient continuous

current capacity and short-circuit capacity for system operation and protection.

2. Optimum design of the power distribution equipment must be demonstrated by Contractor's calculations submitted to the Owners prior to final selection of equipment. This design shall coordinate selection of switchgear interrupting ratings, impedance of transformers, cable sizes and load equipment ratings to meet the following criteria.

   a. Switch gear and circuit interrupting devices at all voltage levels shall have adequate interrupting and close and latch capability for the calculated available three-phase and line-to-ground fault currents.

   b. It shall be possible to start the largest motor on an otherwise fully loaded system without depressing any bus voltage to a level where running motors stall or where motors or driven equipment are at danger of risk of damage.

11.06 Lighting

A. Illumination levels shall be as follows (foot-candle (fc) values are minimum required):

1. Outdoor Facilities:

Stairs and platforms	10 fc
Baghouse area	10 fc
Loading dock areas	20 fc
Roadway and parking areas	1 fc
Weigh scales	20 fc

2. Indoor Spaces:

All processing areas	30 fc
Maintenance shop and spare parts	50 fc
Locker rooms, toilets	20 fc
Electrical rooms	20 fc
Offices	70 fc
Control Rooms	50 fc

B. Metal halide type fixtures shall be used throughout the plant, except in the administration area, electrical room and maintenance shop where fluorescent type fixtures shall be used. Emergency lighting shall be provided in areas where such lighting may be required on failure of the normal power source. Emergency lighting shall be incandescent.

Exit lighting fixtures shall be provided in the office area and all processing areas.

11.07 Grounding

A. Grounding shall be provided to insure safety to personnel and equipment in case of electrical equipment failures and to prevent fires and damage from lightning and/or static electricity and shall be in accordance with IEEE Standard Publications No. 80 and 142. Resistance to ground shall not exceed 1 ohm.

B. The ground system shall consist of a grid of bare, stranded copper cables (#4/0 AWG) buried beneath major buildings and structures and connected to ground rods or wells. Minor structures may use a loop design.

C. System resistance shall be measured with a three terminal "megger" type ground tester which applies AC current to the system and read-out in DC ohms. Two reference ground probes shall be used. Owners shall select location for formal test of ground system. Test results shall be submitted to the Owners within five days.

D. All structural steel, equipment enclosures and/or electrical equipment ground buses shall be grounded through the plant's ground system. Taps from the ground system to individual equipment shall be a minimum #2/0 AWG insulated. Non-current carrying part of electrical equipment shall be grounded from the source by a separate wire to the equipment.

E. Cable tray shall be grounded at no more than 50 foot intervals by a continuous ground conductor running the length of the tray. The ground shall connect to the ground wire which shall connect to the ground system and to the incoming line end of the ground bus in each switchgear and/or MCC which the tray serves.

F. Conduit runs terminated at tray shall be connected to the tray ground with bare copper conductor (No. 8 AWG min.). Grounding conductors in conduit shall be insulated and shall be terminated on the tray ground. Conduit shall not be considered a grounding conductor except for itself and for lighting fixtures.

G. Ground conductors on power circuits shall be connected to equipment grounds and to the source ground bus.

11.08 Communications

A. Telephone System

Telephone outlets shall be provided in the office, control rooms, scale house, maintenance and warehouse areas. All outlets shall be wired to a central location for connection to the Owners supplied telephone

equipment. Provide an empty conduit from Owners' service equipment to telephone company service.

B. Intercom System

In-plant communications shall be provided by radios. Owners will provide and install all radio equipment, including a base station in the control room. Contractor shall provide Owners with CCS manufacturer's recommendations on locating the base station.

C. Computer System

The Owners will provide a computer system for administrative purposes. The system shall be located in the office area. The Contractor shall provide 1" conduit to outlets in office, scale house, control room and maintenance area. This conduit system may be common with the telephone system. Computer cables shall be furnished and installed by the Contractor for connection to the Owners' computer equipment. Provisions for a computer link between the administrative computer and plant CCS shall be provided by the Contractor.

D. Television System

(1) The in-plant television system shall provide ten individual color cameras with zoom lenses at the following locations:

Metal Shredder Tipping Floor

Metal Shredder

Ferrous Metals Load-Out Area

Each Picking Station (3)

Infeed to Picking Station Nos. 1 and No. 2 (2)

Above the infeed conveyors to the RDF shredders (2)

(2) Two color monitors shall be provided in the MRF Control Room with controls to permit fixed or variable point monitoring for each screen. The MSF Control Room shall have a similar system with one color monitor. Provide sequential switcher for automatic screen changing. All monitors shall be mounted in a common console.

11.09 Conduit

A. Underground ductbank conduit shall be a minimum of 3 inch PVC.

B. Underground conduit stub-ups will terminate in couplings 1 inch from the floor or foundation on electrical rooms, and 6 inches from grade for motors or other connections. Above-grade conduit will be rigid,

hot dipped galvanized steel. Aluminum conduit shall be used in corrosive atmosphere where aluminum is better suited. Above grade conduit will be securely and adequately supported and grouped in a selected portion of the pipe racks. Above grade conduit will be 3/4 inch trade size minimum except that 1/2 inch conduit may be used for short taps to selected equipment and at the back of instrument boards. Flexible conduit shall be PVC coated, liquid tight, metal type and suitable for the hazard classification of the area in which it is installed. Flexible conduit will be used to connect vibrating equipment, instrument and motors. Expansion fittings will be installed in long horizontal runs (maximum distance of 150 feet between fittings).

11.10 Conductors

A. Stranded insulated copper conductors shall be used throughout except that multi-conductor control and instrumentation cable will be used where practical and economical. Minimum sizes shall be #12 AWG for power, #14 AWG for control and #16 AWG for instrumentation.

B. Insulation

1. 4160 volt system - 5 kV EPP, shielded with 133% insulation level and PVC jacket.

2 Low voltage (600 volt and below) systems for power - 600 volt, Type XHHW.

3. Low voltage systems for lighting - 600 volt, Type THHN.

4. Control systems - 600 volt, Type THHN.

5. Instrumentation systems - Shielded with EPR or XLPE insulation with Hypalon jacket.

C. Equipment Grounding - Insulated (green) grounding conductors shall be run with circuit conductors of low voltage power and lighting systems.

D. System Segregation and Separation

1. Conductors of different voltage systems shall be run in separate raceways.

2. Lighting wiring shall be run in raceways separate from low voltage power and control.

3. Control wiring shall be run in raceways separate from low voltage power except that control wire for local push-button stations at motors can be run in the same raceway as motor power conductors for motors 30 horsepower and smaller.

4. All instrumentation and noise susceptible control circuits shall be run in raceways separate from power and control. A 3-inch minimum separation will be maintained between instrumentation and power raceways.

11.11 Motors

A. Motors 3/4 horsepower and up shall be three-phase, 460 volts, squirrel cage, induction type, supplied from the 480V MCC's or from equipment control panels.

B. Service factor for all motors shall be 1.15.

C. Motors shall be designed and constructed in accordance with ANSI/NEMA MG1.

D. All motors shall be suitable for full voltage (across-the-line) starting. Torque and current characteristics shall be in accordance with NEMA design "B" unless drive requirements dictate higher values.

E. Motor enclosures shall be suitable for the environment in which they are to operate. It shall be the Contractor's responsibility to determine the location classification and motor enclosure required. All totally enclosed motors shall have at least one threaded drain hole and plug for removal of condensate.

11.12 Heat Tracing

If required, electric heat tracing shall be furnished on all water and process lines exposed to freezing. Self-limited heating cable shall be used and controlled by line sensing thermostats. Each system shall have visual or instrument indication of operation.

11.13 Welding and Maintenance Outlets

A. Provide 480V, weatherproof welding outlets, each on a separate circuit at each of the following locations:

1. Six around perimeter of RDF Processing Building.

2. Two at the Maintenance Building.

3. Two at the Metal Shredder Receiving Building.

B. Provide 110V, 30 amp GFI outlet at each of the above locations.

C. Provide at least six 110V, 30 amp GFI outlets in the maintenance shop area.

11.14 Lightning Protection

Lightning protection shall be provided in accordance with NFPA No. 78.

12.00 INSTRUMENTATION AND CONTROLS

12.01 General

A. A modular, microprocessor-based, Central Control System (CCS) shall be provided for data handling, systems control, monitoring, recording and alarming necessary for proper operation of the plant from a central control room.

B. Control strategies that need to be defined by various Vendors, Subcontractors, or other suppliers of process equipment shall submit those strategies as functional drawings, logic drawings or ladder diagrams of sufficient detail to allow the CCS vendor or the design engineer to implement these strategies in the CCS hardware.

C. The CCS shall control all analog and digital loops except those better suited to local controls or programmable controllers.

D. The CCS shall interface with programmable controllers and local control panels being used for system sequential control and interlocking.

E. For locally controlled systems, a minimum of one system trouble alarm is required. Interface to the CCS is required for alarm.

F. Local indicating devices (position switches, thermometers, etc.) shall be furnished for local monitoring only if data are not available in the CCS. Use of local indications is to be minimized.

12.02 Control Hardware

A. Field equipment shall be of common manufacturer to the maximum extent. Final drive elements shall be of one manufacturer. Local indication when used, such as thermometers, position switches and level switches shall be one manufacturer. Power transducers, pressure transmitters, thermocouples, Resistance Temperature Detectors (RTD's) shall be of one manufacturer.

B. The use of temperature transmitters is discouraged. Thermcouple extension leadwire shall be used to direct connect thermocouples to the reference cold junction in the electronics room termination cabinets.

C. Electronic signals shall be 4-20 milliamps or 1-5 VAC.

D. Pneumatic signals shall be 3-15 psi. The use of current to pneumatic signal transducers is discouraged. When pneumatic final drive

components are used, current to pneumatic positioners that are drive-mounted are encouraged as signal conversion devices.

E. Major plant systems to be controlled and/or monitored from the CCS are:

- MSW Receiving System
- RDF Processing System
- Scale House System
- Metals Shredding System
- Fire Protection System
- HVAC System
- Dust Collection System
- Electrical System
- Compressed Air System

F. Provide programming terminal for programmable logic controllers (PLC). Portable personal computer with vendor specific software packages is preferred.

12.03 MRF System

A. This system shall be designed to operate from the central control panel. All conveyors shall have zero speed switches where applicable and be interlocked for safe operation. An automatic start function shall be provided which shall enable the entire system to start with one operator action. Also an emergency stop system shall enable the operator to shut down the entire system.

B. Provide belt misalignment switches for conveyors with alarm. Provide loss of speed switch on each driven pulley with alarm.

C. Provide a local emergency stop pushbutton near each conveyor and other major pieces of equipment. Operation of a pushbutton shall stop the associated piece of equipment plus all equipment which feeds the stopped item. Equipment which moves material away from the stopped item shall remain in operation.

12.04 Metals Shredding System

A. The system operation shall be monitored and controlled from a central control tower in the scrap yard which provides visual and instrument based observation of the process.

B. The instrument/control system shall be compatible with the MRF control system with monitoring data provided to the MRF control room.

C. Controls shall provide for the remote and automatic start of the system from the control tower. The plant shall also have emergency shut-down from strategic locations on the site.

D. Control features provided for the MRF system shall be provided for the metal shredding system.

12.05 Documentation

Provide a functional written description of the control philosophy of all computer controlled systems.

12.06 Control Rooms

A. The plant shall be provided with two central Control Rooms and be provided with safety glass windows to allow visual observation of the MSW, RDF and MSF processing areas. Each room shall be air conditioned and sound proofed.

B. Each Control Room shall house the CCS hardware, and other control panels not included in the CCS system. Other functions operated from the central Control Room shall include security monitoring, intercom, television monitors and fire alarm/controls. CCS I/0 racks, when used, shall be located in an electronics room adjacent to the Control Room.

13.00 CIVIL/STRUCTURAL

13.01 Site Preparation

A. The site shall be cleared and grubbed as necessary for the project facilities, operations and construction as specified herein. Erosion control for storm drainage during the Construction Phase shall be implemented in accordance with an approved erosion and sedimentation plan. Existing top soil shall be removed and stockpiled for reuse. After completion, disturbed areas shall be regraded, loamed and seeded.

B. Contractor shall utilize "Dig-Safe" for identification of any underground utilities at the site.

13.02 Roadways and Parking

A. The site roads, drives, and permanent parking areas shall be constructed as generally shown on the drawings. Access to all doors shall be paved and provided with concrete stoops. Additional roads and parking shall be as required to support construction activities. As a minimum, the following design criteria applies:

B. Flexible and rigid pavements are to be designed for an AASHTO HS20-44 truck loading. All roads are to be geometrically designed to accept AASHTO WB-50 semi-trailer truck combinations.

C. Permanent parking areas shall be as designated on the conceptual arrangement drawing. Parking spaces for cars are to be sized 9 feet by 18 feet.

D. Design speed 20 mph.

E. Design Grade:

1. Minimum 0.5 percent
2. Maximum 6.0 percent

F. Traffic markings, guardrails and signs shall be provided for proper traffic flow, control and safety.

G. Concrete strip(s) for support of cranked down dolly wheels shall be provided.

13.03 Finish Grading and Landscaping

A. All disturbed unpaved areas in the plant area and along the access road shall be finish graded, loamed and seeded.

B. Minimum graded cross slopes shall be:

Grassed Areas: 4 percent
Paved Areas: 1 percent

C. Additional shrubbery shall be planted as generally shown on the drawings to meet the City of Wilson screening requirements.

13.04 Perimeter Fence

A. The plant area shall be enclosed by an industrial quality 8 foot high galvanized chain link fence. The main entrance way (scale house) shall have a motorized gate which shall be controlled from the central control room. An audio communication link between the gate and the control room shall be provided.

B. Other fence gates shall be hinged and provided with lock.

13.05 Foundation Investigation

A. The determination of soil classification and design bearing capacity shall be the responsibility of the Contractor. Contractor shall carry out soil borings/excavations as required prior to final contract signing. Contractor shall be responsible for all foundation/footing design.

B. Reports of Contractor's soils data shall be provided to the Owner for verification.

13.06 Building Structures

A. Foundations - slab on grade to meet floor loads and geotechnical conditions.

B. Structures shall be clear span rigid frame type with pitched roof. Manufacturer's standard architectural components (windows, personnel doors, roll-up doors, etc.) may be used if they comply with the requirements described herein. Design shall comply with MBMA "Recommended Design Practices Manual."

13.07 Codes and Criteria:

A. Codes and Standards: Design loads shall conform to the requirements of the following references except where exceeded by other provisions of this basis of design:

1. NCS Building Code

2. Loss Prevention Data, Factory Mutual System

3. Occupational Safety and Health Act (OSHA)

B. Structural Analysis, design procedure, allowable stresses and load factors shall be based on the following Codes and Specifications:

1. Reinforced Concrete

"Building Code Requirements for Reinforced Concrete (ACI 318)" of the American Concrete Institute.

2. Structural and Miscellaneous Steel

"Specification for the Design, Fabrication and Erection of Structural Steel for Buildings" of the American Institute of Steel Construction (AISC).

3. Concrete Masonry

"Building Code Requirements for Concrete Masonry Structures" (ACI 531) of the American Concrete Institute

13.08 Loads

A. Dead Loads: floor and roof loads shall include the actual weight of the floor and roof sub-systems, plus allowance for equipment loads and ductwork. The following minimum dead load shall be used.

1. Roof

a.	Roofing and Insulation	Actual
b.	Metal Deck & Framing	Actual
c.	Ductwork, Mechanical	10 psf
d.	Concrete Slabs	Self-weight
e.	Air Handling Units & Baghouse	Self-weight

2. Floors

a.	Supported Concrete Slab	Self-weight
b.	Grating - 1-1/4 x 3/16	10 psf
c.	Framing	Actual
d.	Checkered Plate 3/8" Thick	17 psf
e.	Elec. Conduits, Lights, etc.	10 psf
f.	Platforms	Actual

B. Live Loads: The following minimum unit live loads shall be used for the specific areas:

1. Roof: A 20 psf general live load. Low roof adjacent to high roof will be designed in accordance with the requirements of the NCS Building Code.

2. Office Areas, Stairways and Platforms 100 psf

3. Ground Floor Slab, Forklift Truck 250 psf or 5 Tons

4. Electrical Room - As required for transformer and/or switchgear equipment.

5. Equipment Loads: As required.

6. Hoist Girders: According to AISC requirements.

7. Process Material Loads

   a. MSW and RDF Weight

      (1) 13 pcf for volume calculations (uncompacted)

      (2) 15 pcf for volume calculations (compacted)

      (3) 25 pcf for weight calculations

   b. Scrap Ferrous

      (1) 15 pcf unshredded
      (2) 60 pcf shredded

c. Baled Products

(1) Newspaper	-	26 pcf
(2) Cardboard	-	24 pcf
(3) Plastic	-	22 pcf
(4) Aluminum	-	15 pcf

d. Bulk Products

(1) Aggregates	-	75pcf

e. Blue Bags	-	5 pcf for volume and weight calculation

8. Loads for retaining walls:

a. Soil Weight - 120 pcf (minimum)
b. Horizontal Soil Pressure - 60 psf
c. Vertical Surcharge - 120 psf (minimum)
d. Hydrostatic Loads - The design water table is approximately 6 feet below grade. (To be confirmed by the Contractor.)

9. Wind Loads

Wind loads shall be based upon NCS Building Code for basic wind speed of 80 mph, 50 year mean recurrence.

10. Seismic Design

Seismic design shall be in accordance with the NCS Building Code for Zone 0.

11. Impact loads (as percentage of static loads)

a. Light machinery shaft or motor driven, 20%.
b. Reciprocating machinery or power driven limit, 50%
c. Hangers for floor, etc., 33%

13.09 Construction Materials

A. Soils

1. Soil Borings: The taking of borings and preparation of project geotechnical report will be the Contractor's responsibility prior to final negotiation of lump-sum contract price.

2. Piles: Pile type and capacity to suit geotechnical conditions and design loadings.

3. Spread Footings: allowable maximum soil pressure - to suit geotechnical conditions as confirmed.

4. Backfill: Use excavated material to maximum extent, where suitable. Borrow material to be free from debris, roots, wood, refuse, cinders, coal, frozen materials and petroleum contamination. Maximum size shall be 2".

B. Reinforced Concrete

1. Concrete strength of footings and wall foundations: 3000 psi at 28 days

2. Concrete for slabs-on-grade: 4000 psi at 28 days

3. Concrete slabs at tipping floors and loading floors shall be treated with a dry shake surface hardener.

C. Structural Steel

1. Type A36 unless unusual loads warrant a higher strength steel to be used.

2. Design according to AISC Code, simple framing (Type 2 Construction)

3. Connections

   1. A325 high strength bolts (marked as such)
   2. E70 welding electrodes

4. Deflection

   1. Girts shall be designed to resist wind forces with a maximum deflection of 1/240 of the span

   2. The lateral deflection of the building from wind loading shall be limited to follow the recommendations of AISC "Serviceability design considerations for low rise buildings.

5. Grating Floors: 1-1/4" x 3/16" bearing bar grating, galvanized

6. Checkered Plate Floor: 3/8" thick multi-grip floorplate, galvanized.

D. Miscellaneous and Embedded Metals: Mild steel shapes and plates as required (galvanize for exterior service).

E. Waterproofing: Waterproof all below grade concrete pits.

13.10 Concrete Testing

A. The Contractor shall retain an independent testing laboratory to perform field testing of concrete as follows:

1. As the work progresses, concrete shall be sampled in accordance with ASTM C172.

2. Slump tests shall be made according to ASTM C143.

3. Air content of concrete made with normal weight aggregates that have low water absorption shall be tested according to ASTM C173.

B. Compression Tests

1. Compression test specimens shall be made and cured according to ASTM C 31. Each test shall consist of one set of laboratory cured cylinders. A set shall consist of four cylinders. The minimum number of tests shall be one for each 50 cubic yards of concrete for each class or one for each 5000 square feet of surface area for slabs or walls. At least one test per day shall be made of each class of concrete used that day.

2. Cylinders shall be tested one at 7 days, two at 28 days, and one at 56 days, if required.

3. The strength level of the concrete will be considered satisfactory so long as the averages of any three consecutive strength test results of cylinders equal or exceed the specified strength f'c, and no individual strength test result falls below the specified strength f'c by more than 15%.

4. Reports on the cylinder tests shall be made to the Owner and shall show:

   Dates placed and tested
   Name of job
   Proportions of cement and aggregate
   Initial quantity of water and water added at the site
   Slump
   Air content
   Admixtures
   Location of concrete in the building
   Design compressive strength in pounds per square inch and class
   Tested compressive strength in pounds per square inch
   Atmospheric and concrete temperature at time of sampling

5. In all cases where the strength of the cylinders shown by these tests for any portion of the structure falls below the required

compressive strengths specified, the Owners shall have the right to order a change in the mix for the remaining portion of the structure.

C. Tests on Structure (Nonconforming Test Results)

1. If concrete cylinders' strength fall below specified requirements, the Owners may require cores to be secured and compression tests of the concrete in question to be performed in accordance with ACI 318.

2. In the event test data develops a concern for the structural safety of a portion of the structure, the Owners may direct a load test to be made. A load test shall not be made until that portion of the structures to be subject to load is at least 56 days old. Shoring and centering shall have been removed at least 30 days prior to the test. Load tests shall be conducted in accordance with ACI 318.

3. Tests required due to nonconformance shall be conducted by an independent laboratory retained by the Owners but paid for by the Contractor.

14.00 ARCHITECTURAL CRITERIA

14.01 General Description

A. The major architectural aspect of the project is the MSW Receiving Building/RDF Processing Building which will be adjoining to each other and dominate the site. The RDF processing building will house refuse processing equipment and the administration area which will contain the offices, locker rooms, lunch room, etc.

B. The second major feature of the site will be the Metals Receiving Building.

C. A Maintenance Building will contain the parts storage area as well as instrument and electrical shop.

D. The exterior treatment of all structures is to be of consistent design and shall blend as harmoniously as possible with the environs. Exterior and interior treatment details and color schemes shall be subject to Owners' approval.

14.02 Architectural Analysis of Building Code

The NCS Building Code shall be used to conduct an architectural analysis of the structures relative to the following features:

1. Means of Egress
2. Interior Stairways

3. Access to Roofs
4. Smoke-proof Enclosures
5. Exit Signs

14.03 Building Materials

A. Exterior

1. Siding - Uninsulated metal panels

2. Roofs - Uninsulated metal panels

3. Administration areas shall be insulated.

B. Interior Finishes

1. Interior Walls - concrete masonry block, except steel stud/gypsum partition may be used within the office area.

2. Walls and floors of toilets, showers and locker rooms - dry wall with ceramic tile finish.

3. Ceilings - suspended acoustic tile ceilings in all employee facility rooms, except for toilet areas which shall have plaster ceilings. Showers shall have ceramic tile finish.

4. Concrete block, gypsum wall board and concrete walls shall be sealed and painted.

5. Standard floor finish in work areas shall be exposed concrete.

6. Control room floor shall be vinyl composition tile.

7. MSW and MSF tipping floor shall be finished with a suitable material which experience has shown will withstand heavy vehicular traffic expected in the area.

8. Administrative area floors shall be vinyl tile with a 4-inch high cove base.

C. Glazing

Windows shall be located in the office area to permit observation of the work area. Placement and number of windows shall be approved by the Owner.

D. Doors

1. Personnel doors in industrial areas will be hollow metal in metal door frames (3' x 7' size).

2. Interior office area doors shall be solid core wood in pressed metal frames (3' x 7' size).

3. Roll-up doors shall be provided on the MSW truck receiving bays and shall be motor operated, 12' wide by 14' high (min.).

E. Entrance Ways

All building access ways, including stairways to grade, shall be provided with concrete stoops or aprons.

14.04 Functional Layout

The building layout shall emphasize functional relationships of equipment, personnel circulation and access for servicing.

14.05 Synopsis of Required Spaces

A. Space Requirements

Function	Area, Ft^2	Elevation
Plant Manager	250	Ground
Maintenance Superintendent	168	Ground
Bookkeeper/Reception Area	270	Mezzanine
Maintenance Supervisor	169	In Maint. Bldg.
Lunch Room	600	Ground
Utility/Supply Room	200	Ground
Electrical Room	300	Ground
Locker Rooms	See Below	Ground
Maintenance Area/Parts Storage	2400	Separate Building
MRF Control Room	300	Mezzanine
MSF Control Room	300	Mezzanine (Tower)
Operations Superintendent	169	Mezzanine

The above space requirements of the proposed facility are minimums only and shall be sized by Contractor to suit operational requirements.

B. Special Features

1. The Lunch Room shall be provided with a compact kitchen unit including upper and lower cabinets, sink, microwave oven and refrigerator and space for six vending machines.

2. Locker Rooms

a. Men's room contains 3 showers, 2 water closets, 3 urinals, 3 lavatories and 30 pair of half lockers and benches.

b. Women's room contains 3 showers, 3 water closets, 3 lavatories and 30 pair of half lockers and benches.

c. Both locker rooms shall be provided with mirrors and other accessories for a complete facility.

3. All office area doors shall be provided with locks.

4. Facilities for public viewing of the MRF work area shall be provided. Access to viewing area shall be provided from within the office area and consist of an elevated walkway which overlooks the RDF processing area. Access to the viewing area shall not require entry onto the processing floor.

5. A separate lavatory/water closet shall be provided in the scrap metals receiving building and the maintenance building.

6. The enclosure around each RDF shredder shall be provided with hinged explosion panel(s) to dissipate energy in an upward direction. The size of each enclosure shall provide for adequate maintenance access and monorail for lifting heavy equipment.

14.06 Painting

A. Contractor shall supply structural steel, ducts and exposed steel plate cleaned of scale, rust, and foreign matter, in line with good commercial practice, and given one shop coat of paint or commercial primer before shipment. Equipment supplied by the Contractor shall be shipped with the vendor's standard prime paint coat, and/or vendor's standard finish coat. Exterior exposed structural steel, uninsulated ducts, exposed steel plate, and vendor prime coated equipment shall be cleaned and finish painted with two-mil dry film thickness of an alkyd enamel paint after assembly and erection. Building interior offices shall be finish painted. Contractor shall clean and paint areas of vendor finish coated equipment affected by field weldments and/or assembly.

B. Building siding and roofing shall be supplied with shop-applied baked-on paint coat.

14.07 Access Platforms

Contractor shall furnish and install galvanized steel grating access platforms, stairs, and ladders in accordance with the requirements of the Occupational Safety and Health Administration requirements. Structural steel framing shall be painted structural steel. Access will be provided to the following areas as a minimum.

Picking Stations
Trommels
Metal and RDF Shredders

Eddy Current Separators
Conveyor Head Pulleys
Magnets

15.00 OWNER SUPPLIED EQUIPMENT AND MATERIALS

15.01 The Owners shall be responsible for purchasing, delivering and installing the following items of equipment, materials and services.

15.02 Stationary Equipment

A. Office furniture consisting of desks, chairs, file cabinets, book cases, etc.

B. Machine shop tools.

C. Telephone equipment and handsets.

D. Personal and office computers.

15.03 Vehicles

Representative vehicles may include the following as dictated by the facility design.

- Front-End Loader
- Forklift
- Tractors/Trailers
- Pickup Truck/Service Vehicle
- Roll-Off Container Truck
- Street Sweeper

15.04 Movable Equipment

A. Roll-Off Containers (20 cu. yd. min.)

B. Tote Bins (self-unloading, 1 cu. yd.)

15.05 Test Material

A. All MSW and scrap metal material used for testing and initial operation.

B. Disposal of all materials used during testing.

16.00 SPARE PARTS AND SPECIAL TOOLS

16.01 General Spare Parts

A. The Contractor's procurement specifications shall request each Vendor to provide a recommended spare parts list with specific model numbers and exploded views of parts as well as a price sheet with its

bid on the equipment. This information shall be provided to the Owners at the time an equipment purchase order is issued. The Owners shall purchase spare parts from the Contractor's equipment supplier. Owners shall receive and place into storage all spare parts received. Contractor shall provide adequate and secure storage area for spares.

B. The Contractor shall be responsible for cost for resupply, delivery and installation of Owners' spare parts used during testing and start-up of the plant. All Owners supplied spares may not be available prior to Substantial Completion.

16.02 Special Tools

A. The Contractor's procurement specifications shall require equipment suppliers to provide any special tools, equipment or lifting devices required to install, test, clean, or maintain the equipment. These items shall be supplied by the Contractor and be turned over to the Owner upon Substantial Completion. Special tools shall be in good working order.

17.00 TRAILER PARK

17.01 The MRF site shall include a hard stand for parking and servicing twenty 45 ft long semi-trailers and other vehicles associated with the project.

17.02 Service facilities shall include Diesel fuel storage tank(s) with a fuel dispensing point for fueling tractors; a propane storage area for holding full and empty cylinders of propane which are used to operate fork lifts; and a maintenance building which will also house a parts storage area, maintenance supervisor's office and instrument shop.

17.03 Diesel Fuel System

A. The Diesel storage tank(s) shall be above grade and diked to contain 110% of the tanks capacity. The tank(s) shall have a minimum capacity of 12,000 gallons and shall be provided for filling by truck delivery.

B. Fuel shall be metered from the tank(s) to vehicles by means of a lockable fuel dispenser with a numerical read-out which is reset to "zero" at the start of each loading operation.

C. The area under the dispensing station shall be concrete and sloped to a drain which will collect any load-out spillage.

D. An air tower shall be provided at the fuel dispenser. Air pressure shall be adjustable and the hose at least 60 ft long.

17.04 Vehicle Propane Storage

A. This area shall be at least 50 feet away from the property line and any other building structure on the site.

B. Suitable storage racks shall be provided to secure both empty and full propane tanks. The area shall provide for 24 vehicle type fuel tanks.

C. The storage area shall be covered with a canopy to keep direct sunlight off of the tanks.

D. The storage area shall be securable.

17.05 Maintenance Building

A. The maintenance building shall have a working area of 2400 ft^2 minimum. One service bay shall be provided to allow servicing (tire repair, servicing of walking floors, brakes, etc.) trailers, MRF equipment and other service vehicles.

B. At least 400 ft^2 of the building space shall be dedicated to parts storage with built in industrial shelving.

C. At least 400 ft^2 of the building space shall be isolated to form an instrument shop.

D. The maintenance supervisor's office shall be located in the maintenance building.

E. Other features of this building are described in other paragraphs of this SECTION.

18.00 OFF-SITE WORK

18.01 Contractor shall perform the following work which is off of the Construction Site.

A. Extend City of Wilson Water System.

B. Add queuing lane on west site of Black Creek Road.

18.02 City of Wilson Water System

A. City of Wilson Public Service shall supply contractor with a fitting to connect ductile iron with the existing 12" asbestos lined concrete pipe located on the west side of Black Creek Road 350 feet north of the northern limit of the Wilson County Site.

B. Contractor shall supply and install a 12" ductile iron pipe underground along Black Creek Road from the City of Wilson tie-in described above to directly opposite the southern limit of the Wilson Site (an approximate distance of 900 ft).

C. Contractor shall supply and install two fire hydrants connected to the 12" line. One fire hydrant shall be located directly opposite the southern limit of the Wilson Site and the other hydrant shall be located approximately half way between the southern limit of the Wilson Site and the city tie-in location.

D. Contractor shall also supply and install tee-off of the 12" line to supply the Wilson Site with fire and potable water.

E. The termination point of the new 12" water line shall be suitable for future extension of the line.

F. All work and materials shall conform to City of Wilson "Water Distribution Specifications," dated 10/93.

G. City water pressure is 45 psi $\pm$ 3 psi.

18.03 Queuing Lane on West Side of Black Creek Road.

A. Contractor shall add a 12 foot wide, 250 ft long paved queuing lane on the west side of Black Creek Road.

B. The southern end queuing lane shall terminate directly across from the entrance to the site.

C. All of the above work shall occur within the existing road right-of-way and shall conform to NCS Department of Transportation regulations.

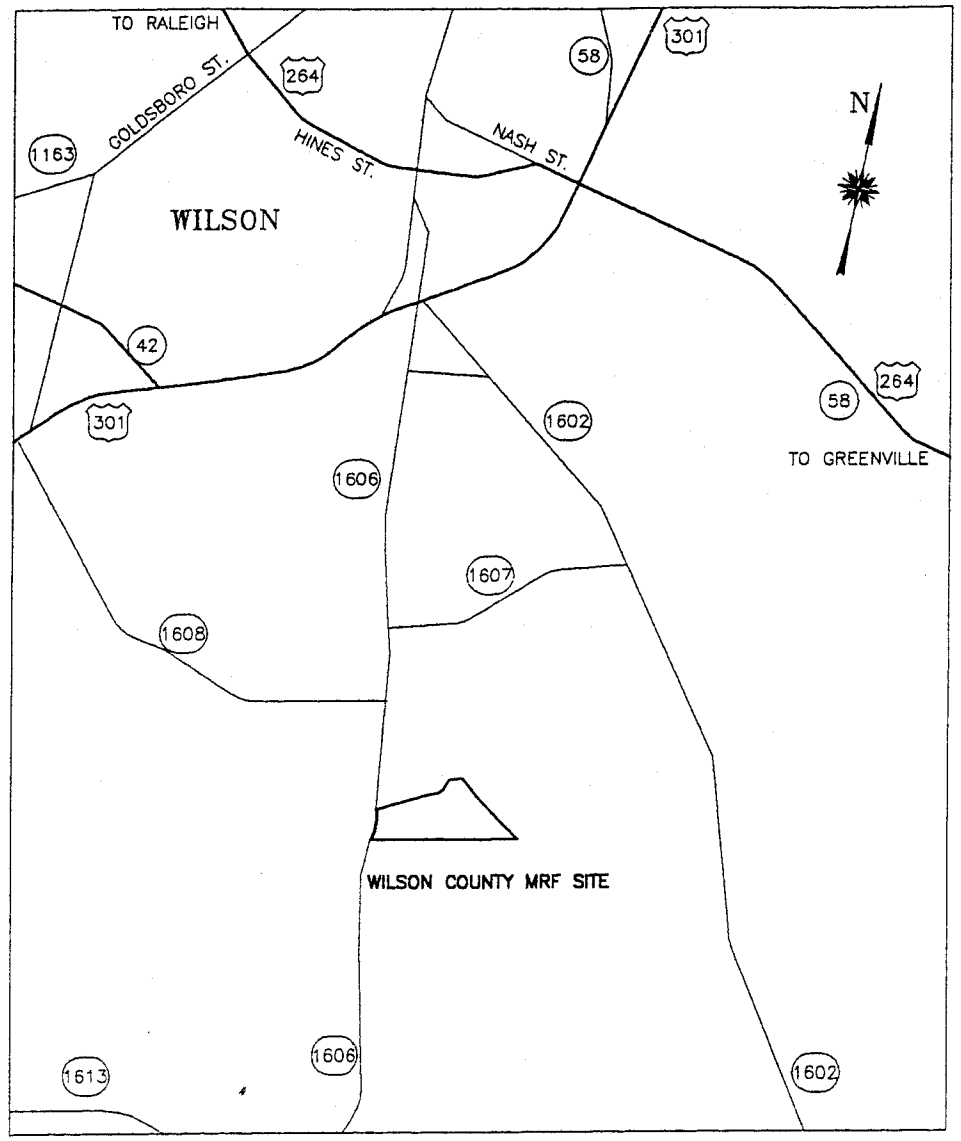

SITE LOCATION PLAN

WILSON RESOURCES L.P.
HOUSTON, TEXAS

MATERIAL RECOVERY FACILITY
AT
WILSON COUNTY, NORTH CAROLINA

PREPARED BY

TRI-MONT ENGINEERING COMPANY
THE SCHRAFFT CENTER, SUITE 208
529 MAIN ST.
BOSTON, MA 02129

TRI-MONT DRAWING NO.	TITLE
D-071-031-T1	TITLE SHEET AND INDEX
D-071-031-C1	MRF SURVEY DRAWING - R.R. HERRING & ASSOCIATES
D-071-031-C2	OVERALL SITE PLAN
D-071-031-C3	MRF & EGF SITE PLAN
D-071-031-C4	METAL SHREDDER SITE PLAN
D-071-031-C5	MRF & EGF ELEVATION LOOKING NORTH
D-071-031-F3	MASS FLOW DIAGRAM, METAL SHREDDER
D-071-031-F4	DUST COLLECTION SYSTEM FLOW DIAGRAM
D-071-031-F5	MRF MASS FLOW DIAGRAM, BLUE BAG RECOVERY
D-071-031-F6	MRF MASS FLOW DIAGRAM, BLUE BAG PROCESSING ONLY
D-071-031-B1	MATERIAL BALANCE DIAGRAM
D-071-031-M1	MRF EQUIPMENT LOCATION PLAN
D-071-031-S1	FLOOR PLANS - OFFICE & MAINTENANCE BUILDING
D-071-031-E1	ELECTRICAL ONE-LINE DIAGRAM

NEW SECTION 3

PRELIMINARY

No.	Description	By	Date	Appd
F	CONTRACT AWARD	MIR	11/23/94	GJC
E	ADDENDUM NO. 1	C.U.	8/3/94	GJC
D	FOR BID	HC	7/15/94	GJC
C	FOR BID/PERMIT	C.U.	6/24/94	GJC
B	FOR PERMIT	C.U.	6/22/94	GJC
A	FOR REVIEW	C.U.	5/13/94	GJC

REVISIONS

TRI-MONT Engineering Company
Boston, MA.

CLIENT: WILSON RESOURCES L.P.

PROJECT: WILSON COUNTY MRF

Title: TITLE SHEET AND INDEX

TRI-MONT	By	Date	Client	By	Date
Drawn	C.UMANITA	5/6/94	Approved		
Checked	M.I.RAVECH	5/6/94	Approved		
Approved	G.J.CAHILL	5/6/94	Approved		

Scale:	Job No.	Drawing No.	Rev. No.
NONE		D-071-031-T1	F

12/2/94

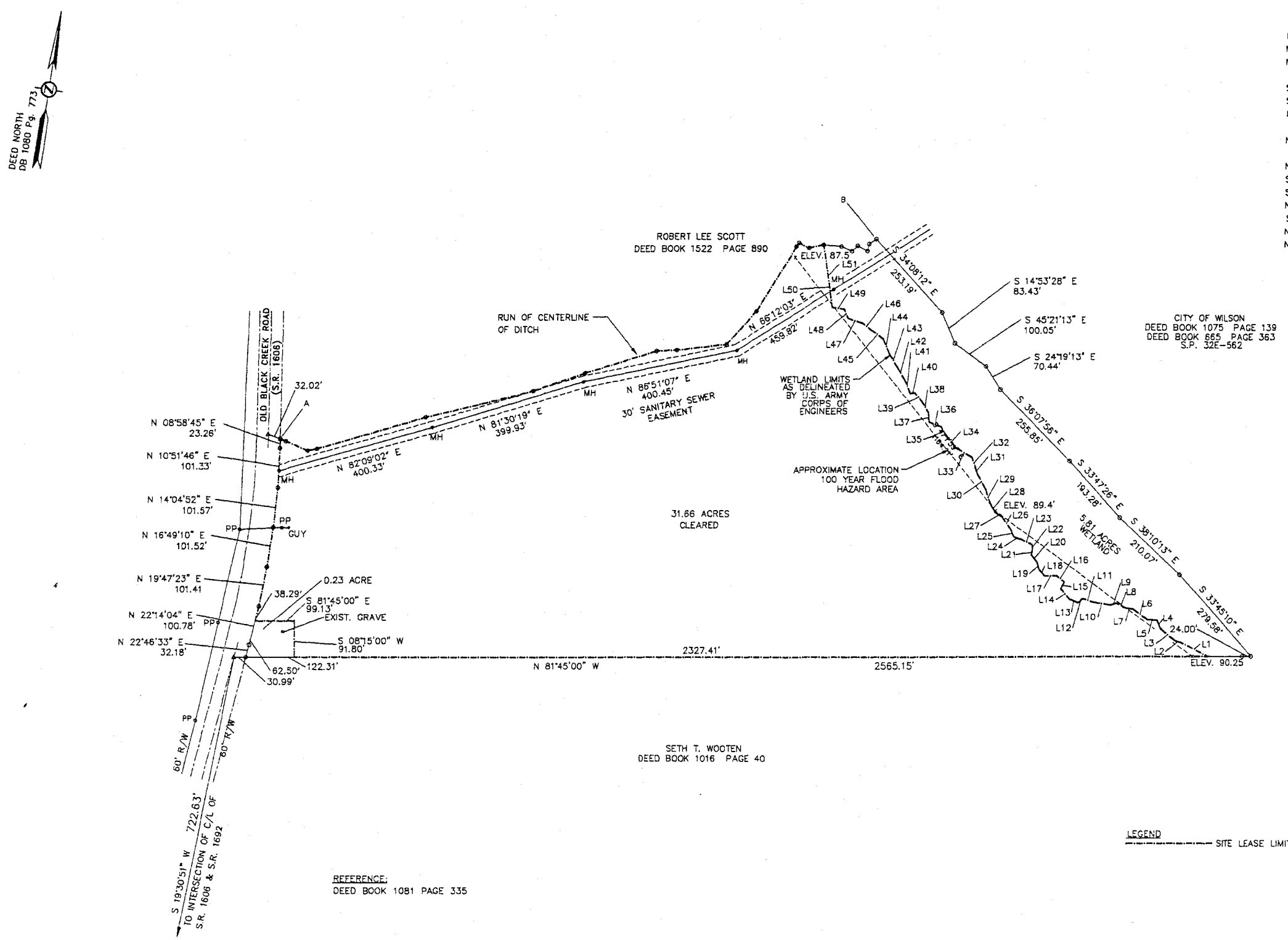

REFERENCE:
DEED BOOK 1081 PAGE 335

LEGEND
SITE LEASE LIMIT

TRAVERSE OF CENTERLINE OF DITCH

	S 60°33'40" E	15.18'
	S 57°29'17" E	60.64'
	N 86°01'41" E	24.60'
	N 81°45'00" E	283.47'
	N 84°29'23" E	279.83'
	N 79°04'20" E	139.90'
	N 81°29'41" E	191.59'
	S 84°06'30" E	52.47'
	S 88°27'30" E	127.14'
	N 50°40'21" E	113.91'
	N 39°51'11" E	192.38'
	N 39°49'54" E	12.00'
	S 54°11'50" E	29.69'
	N 87°03'35" E	38.40'
	S 76°49'34" E	44.59'
	S 58°40'55" E	29.52'
	N 53°28'57" E	19.32'
	S 53°27'41" E	28.45'
	N 22°23'38" E	18.65'
	N 64°00'23" E	22.13'

TRAVERSE LINE OF WETLAND LIMITS

L1	N 52°23'31" W	75.90'
L2	N 67°45'13" W	13.00'
L3	N 43°59'56" W	46.57'
L4	N 14°14'47" W	25.32'
L5	N 85°20'29" W	27.23'
L6	N 39°56'55" W	44.66'
L7	N 68°42'34" W	23.08'
L8	N 51°36'52" W	18.40'
L9	N 86°10'26" W	23.73'
L10	N 71°26'24" W	43.94'
L11	N 64°25'51" W	24.28'
L12	S 66°33'47" W	15.49'
L13	N 68°51'56" W	26.04'
L14	N 26°20'22" W	35.10'
L15	N 40°08'10" E	18.23'
L16	N 45°51'41" W	29.92'
L17	N 87°51'28" W	26.21'
L18	N 29°49'53" W	23.82'
L19	N 13°38'46" W	16.95'
L20	N 34°45'51" W	24.11'
L21	N 19°38'29" E	14.00'
L22	N 04°46'28" E	14.78'
L23	N 57°29'40" W	28.50'
L24	N 61°11'08" W	22.11'
L25	N 12°35'42" W	20.73'
L26	N 29°14'11" W	37.95'
L27	N 38°16'55" W	22.22'
L28	N 29°56'13" W	15.35'
L29	N 10°11'12" W	44.77'
L30	N 23°24'12" W	47.08'
L31	N 13°04'26" W	19.38'
L32	N 12°13'03" W	23.39'
L33	N 45°36'05" W	46.59'
L34	N 32°22'06" W	39.28'
L35	N 18°41'28" W	29.57'
L36	N 65°51'50" W	33.80'
L37	N 09°21'10" E	25.60'
L38	N 23°53'45" W	32.80'
L39	N 32°36'20" W	29.78'
L40	S 88°53'04" W	10.25'
L41	N 16°20'19" W	40.51'
L42	N 22°33'24" W	34.24'
L43	N 20°39'29" W	40.99'
L44	N 17°53'48" W	39.70'
L45	N 42°07'45" W	38.64'
L46	N 53°01'28" W	31.02'
L47	N 59°41'10" W	34.71'
L48	N 17°18'52" W	23.96'
L49	N 68°50'17" W	28.20'
L50	N 02°34'08" W	24.14'
L51	N 01°26'32" W	134.75'

NOTES:
DRAWING TAKEN FROM SURVEY DRAWING BY R.R. HERRING & ASSOCIATES OF WILSON, NC ENTITLED "SURVEY FOR WILSON RESOURCES, L.P.," DATED OCTOBER, 1994.

0 100 200 300 400 500
SCALE: 1"=150'

PRELIMINARY

No.	Description	By	Date	Appd
C	CONTRACT AWARD	HC	11/23/94	GJC
B	REVISED BOUNDARY	C.U.	10/5/94	GJC
A	ADDENDUM NO. 1	C.U.	8/3/94	GJC

REVISIONS

TRI-MONT Engineering Company
Boston, MA.

CLIENT: WILSON RESOURCES L.P.

PROJECT: WILSON COUNTY MRF

Title: MRF SURVEY DRAWING

TRI-MONT	By	Date	Client	By	Date
Drawn	C.UMANITA	8/3/94	Approved		
Checked	G.J.MORIN	8/3/94	Approved		
Approved	G.J.CAHILL	8/3/94	Approved		

Scale:	Job No.	Drawing No.	Rev. No.
1"=150'		D-071-031-C1	C

11/18/94

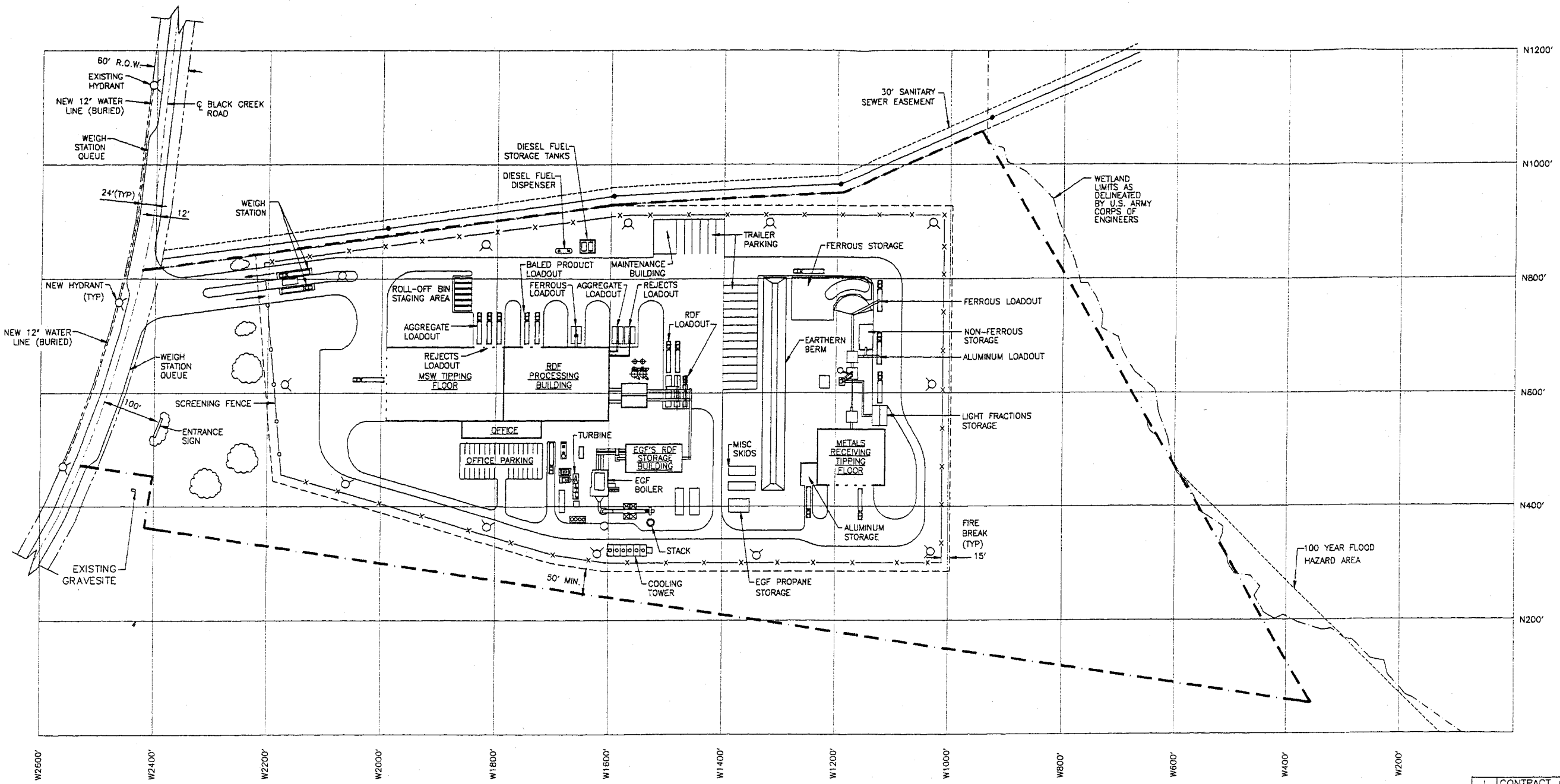

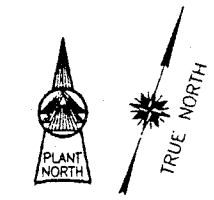

NOTES:
1. ALL AREAS AROUND SITE ARE ZONED I-2, HEAVY INDUSTRIAL.
2. SITE BOUNDARIES ARE TAKEN FROM WILSON COUNTY, NORTH CAROLINA RECORDS. BOOK 1081 PAGE 335 BOUNDARIES ARE NOT VERIFIED BY FIELD SURVEY.
3. FINAL SITE ARRANGEMENT SHALL CONFORM TO SITE USE PERMIT.

LEGEND
- BATTERY LIMITS
- SHRUBBERY SCREEN
- FIRE HYDRANT
- FENCING
- SCREENING FENCE

0 50 100 200 300 400
SCALE: 1"=100'

PRELIMINARY

No.	Description	By	Date	Appd
1	CONTRACT AWARD	HC	11/23/94	GJC
H	ADDED PAVING NOTE	HC	10/24/94	GJC
G	PRE-CONTRACT	C.U.	10/12/94	GJC
F	ADDENDUM NO. 1	C.U.	8/3/94	GJC
E	FOR BID	HC	7/15/94	GJC
D	FOR BID/PERMIT	C.U.	6/24/94	GJC
C	FOR PERMIT	C.U.	6/22/94	GJC
B	SPECIAL USE PERMIT	C.U.	6/20/94	GJC
A	FOR REVIEW	C.U.	5/13/94	GJC

REVISIONS

TRI-MONT Engineering Company
Boston, MA.

CLIENT: WILSON RESOURCES L.P.

PROJECT: WILSON COUNTY MRF

Title: OVERALL SITE PLAN

TRI-MONT	By	Date	Client	By	Date
Drawn	C.UMANITA	4/21/94	Approved		
Checked	M.I.RAVECH	4/21/94	Approved		
Approved	G.J.CAHILL	4/21/94	Approved		

Scale:	Job No.	Drawing No.	Rev. No.
1"=100'		D-071-031-C2	1

12/1/94

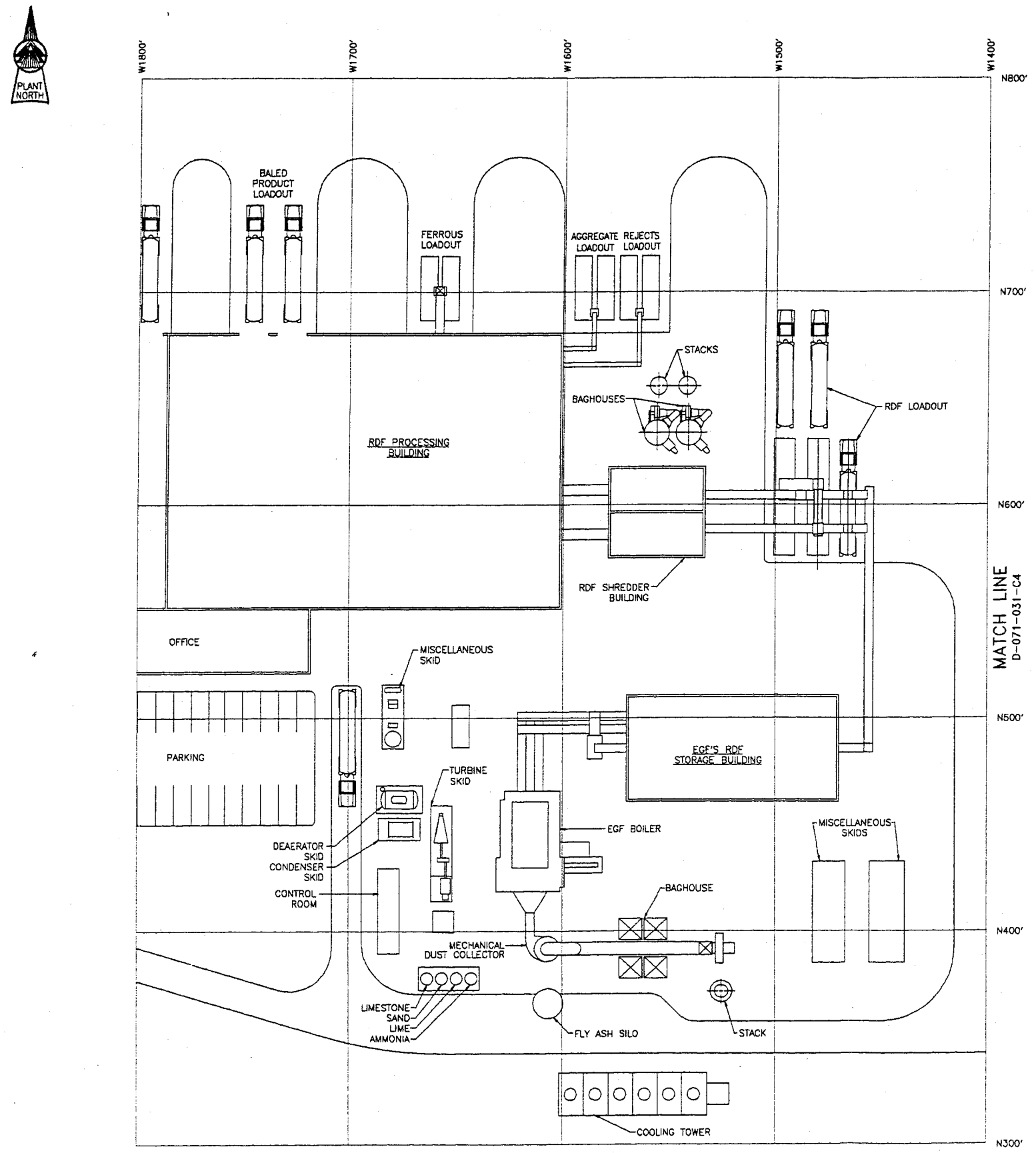

PRELIMINARY

0 10 20 30 40 50 75 100
SCALE: 1"=30'

No.	Description	By	Date	Appd
E	CONTRACT AWARD	HC	11/23/94	GJC
D	ADDENDUM NO. 1	C.U.	8/5/94	GJC
C	FOR BID	HC	7/15/94	GJC
B	FOR BID/PERMIT	C.U.	6/24/94	GJC
A	FOR PERMIT	C.U.	6/20/94	GJC

REVISIONS

TRI-MONT Engineering Company
Boston, MA.

CLIENT: WILSON RESOURCES L.P.

PROJECT: WILSON COUNTY MRF

Title: MRF & EGF SITE PLAN

TRI-MONT	By	Date	Client	By	Date
Drawn	C.UMANITA	6/17/94	Approved		
Checked	M.I.RAVECH	6/17/94	Approved		
Approved	G.J.CAHILL	6/17/94	Approved		

Scale:	Job No.	Drawing No.	Rev. No.
1"=30'		D-071-031-C3	E

12/1/94

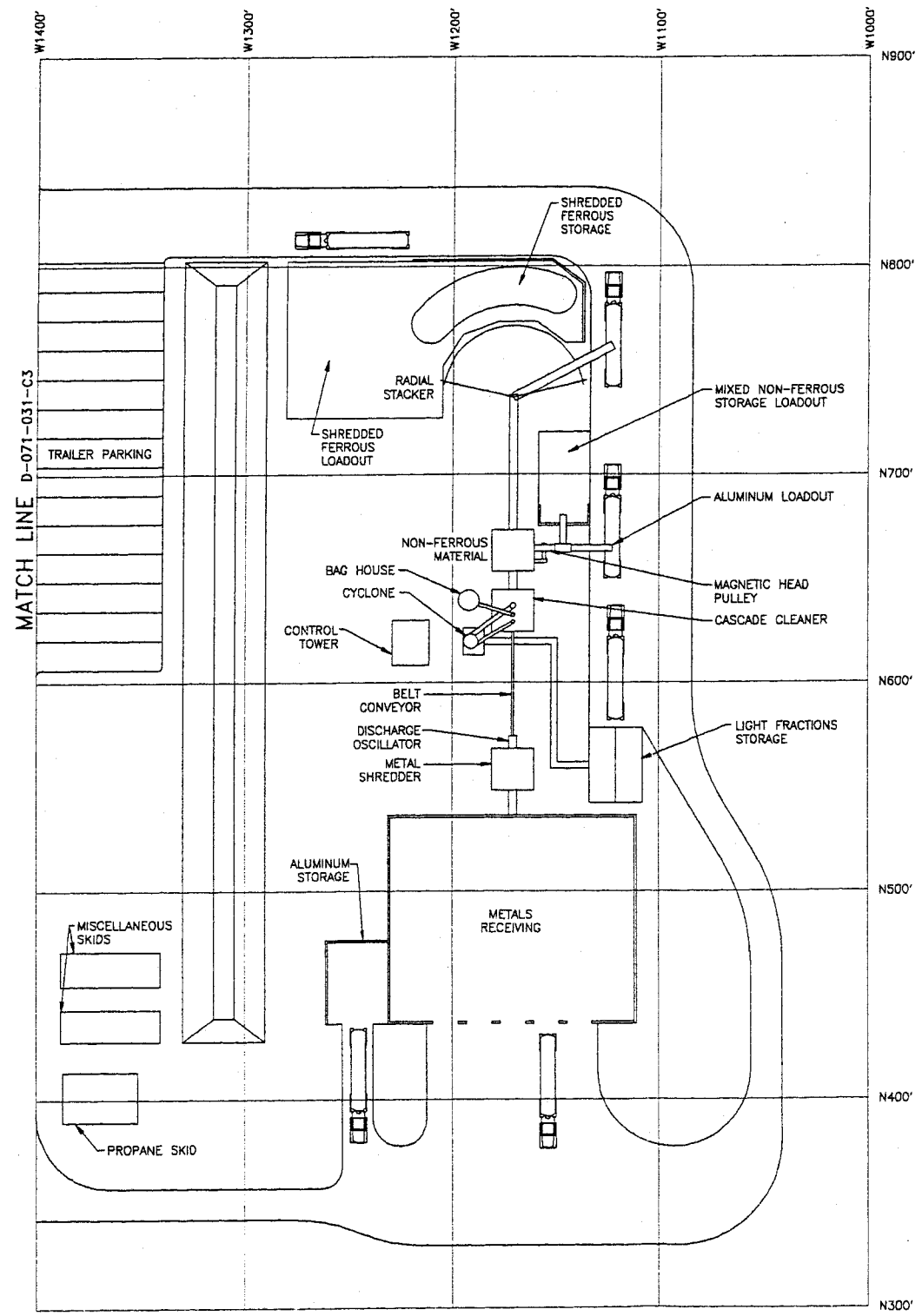

0 20 40 80 120 160

SCALE: 1"=40'

PRELIMINARY

No.	Description	By	Date	Appd
E	CONTRACT AWARD	HC	11/23/94	GJC
D	ADDENDUM NO. 1	C.U.	8/5/94	GJC
C	FOR BID	HC	7/15/94	GJC
B	FOR BID/PERMIT	C.U.	6/24/94	GJC
A	FOR PERMIT	C.U.	5/13/94	GJC

REVISIONS

TRI-MONT Engineering Company
Boston, MA.

CLIENT: WILSON RESOURCES L.P.

PROJECT: WILSON COUNTY MRF

Title: METAL SHREDDER SITE PLAN

TRI-MONT	By	Date	Client	By	Date
Drawn	C.UMANITA	5/2/94	Approved		
Checked	M.I.RAVECH	5/2/94	Approved		
Approved	G.J.CAHILL	5/2/94	Approved		

Scale:	Job No.	Drawing No.	Rev. No.
1"=40'		D-071-031-C4	E

12/1/94

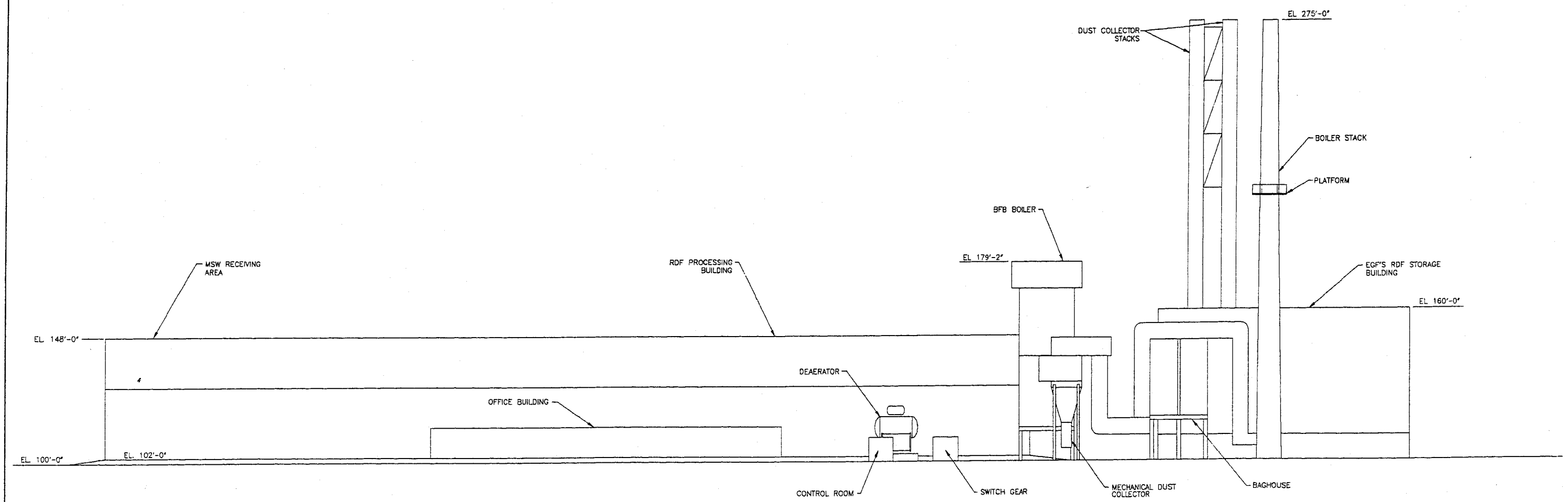

ELEVATION LOOKING NORTH

PRELIMINARY

0 10 20 40 60 80
SCALE: 1"=20'

No.	Description	By	Date	Appd
D	CONTRACT AWARD	HC	11/23/94	GJC
C	FOR BID	HC	7/15/94	GJC
B	FOR BID/PERMIT	C.U.	5/24/94	GJC
A	FOR PERMIT	C.U.	5/13/94	GJC

REVISIONS

TRI-MONT Engineering Company
Boston, MA.

CLIENT: WILSON RESOURCES L.P.

PROJECT: WILSON COUNTY MRF

Title: MRF & EGF ELEVATION LOOKING NORTH

TRI-MONT	By	Date	Client	By	Date
Drawn	C.UMANITA	4/19/94	Approved		
Checked	M.I.RAVECH	4/20/94	Approved		
Approved	G.J.CAHILL	4/29/94	Approved		

Scale:	Job No.	Drawing No.	Rev. No.
1"=20'		D-071-031-C5	D

11/30/94

METAL SHREDDER PROCESS

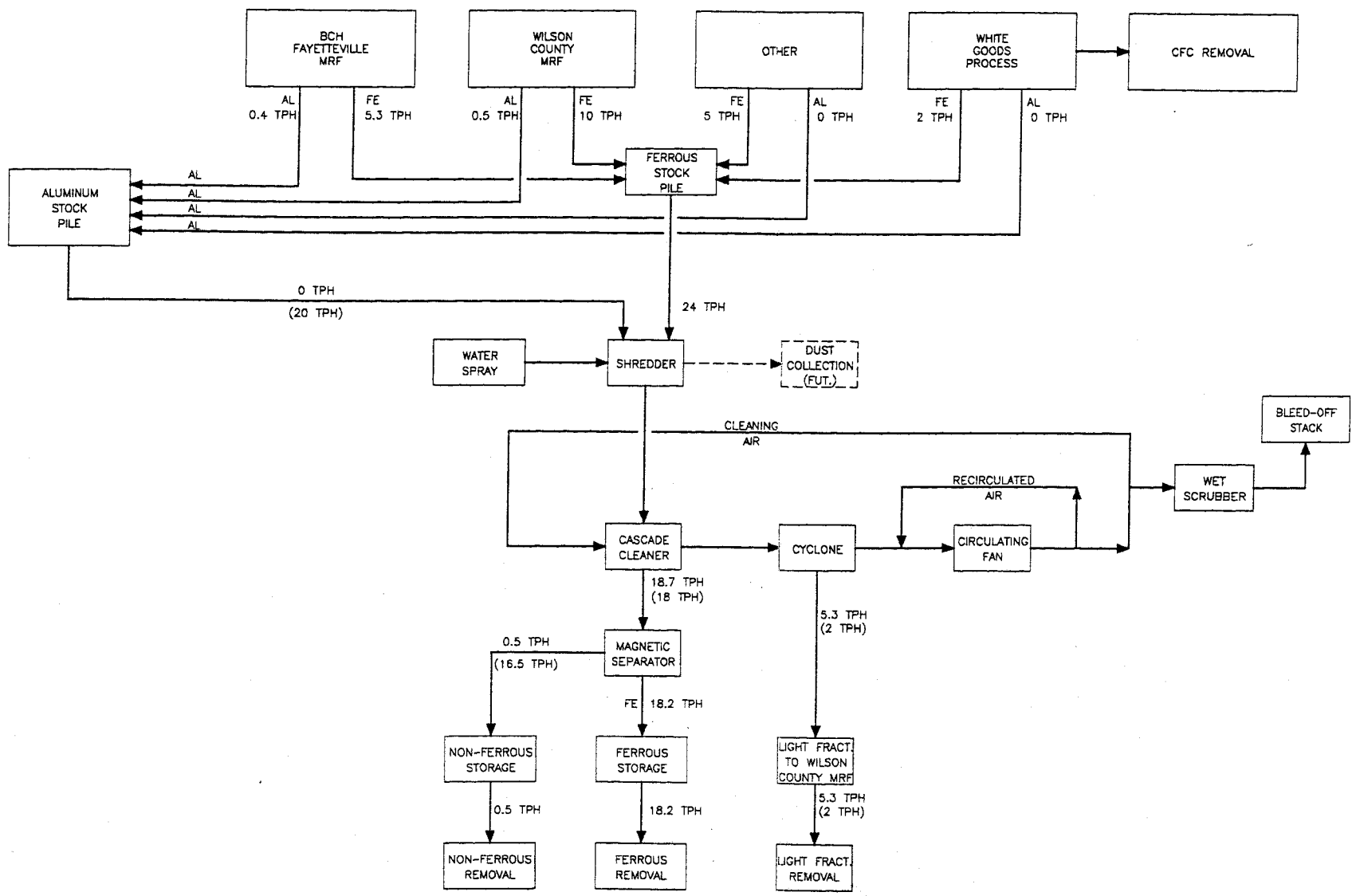

NOTE:
( )- INDICATES ALUMINUM PROCESS RATE.

PRELIMINARY

No.	Description	By	Date	Appd
C	CONTRACT AWARD	MIR	11/23/94	GJC
B	FOR BID/PERMIT	C.U.	6/28/94	GJC
A	FOR REVIEW	C.U.	5/13/94	GJC

REVISIONS

TRI-MONT Engineering Company
Boston, MA.

CLIENT: WILSON RESOURCES L.P.

PROJECT: WILSON COUNTY MRF

Title: MASS FLOW DIAGRAM, METAL SHREDDER

TRI-MONT	By	Date	Client	By	Date
Drawn	C.UMANITA	4/29/94	Approved		
Checked	M.I.RAVECH	4/29/94	Approved		
Approved	G.J.CAHILL	4/29/94	Approved		

Scale:	Job No.	Drawing No.	Rev. No.
NONE	D-071-031-F3		C

11/21/94

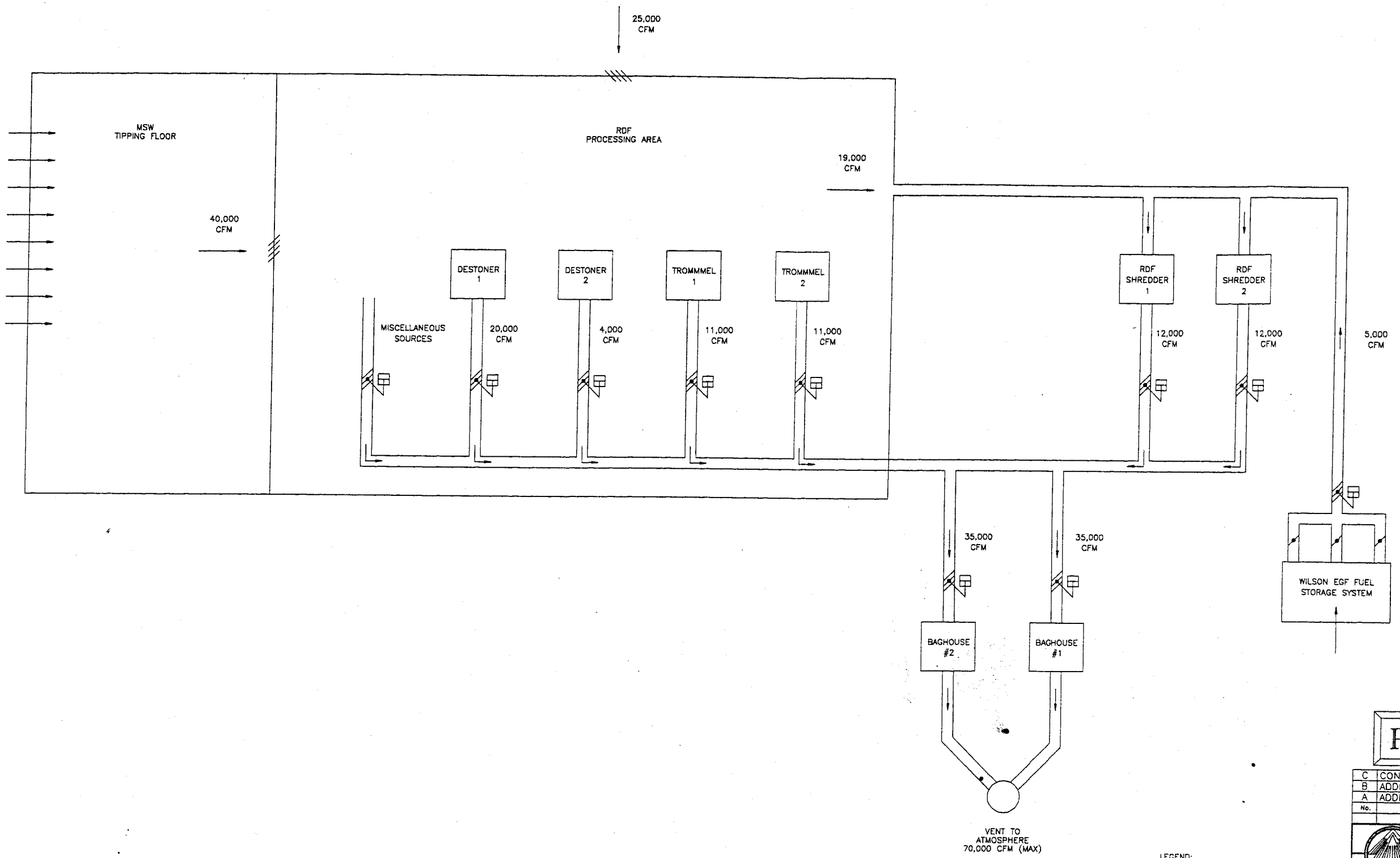

LEGEND:

DRIVEN DAMPERS

BALANCING DAMPERS

PRELIMINARY

No.	Description	By	Date	Appd
C	CONTRACT AWARD	MIR	11/23/94	GJC
B	ADDED VENT TO ATM	HC	10/25/94	GJC
A	ADDENDUM NO. 1	C.U.	8/5/94	GJC

REVISIONS

TRI-MONT Engineering Company
Boston, MA.

CLIENT: WILSON RESOURCES L.P.

PROJECT: WILSON COUNTY MRF

Title: DUST COLLECTION SYSTEM FLOW DIAGRAM

TRI-MONT	By	Date	Client	By	Date
Drawn	C.UMANITA	8/5/94	Approved		
Checked	G.J.MORIN	8/5/94	Approved		
Approved	G.J.CAHILL	8/5/94	Approved		

Scale:	Job No.	Drawing No.	Rev. No.
NONE	D-071-031	F4	C

11/21/94

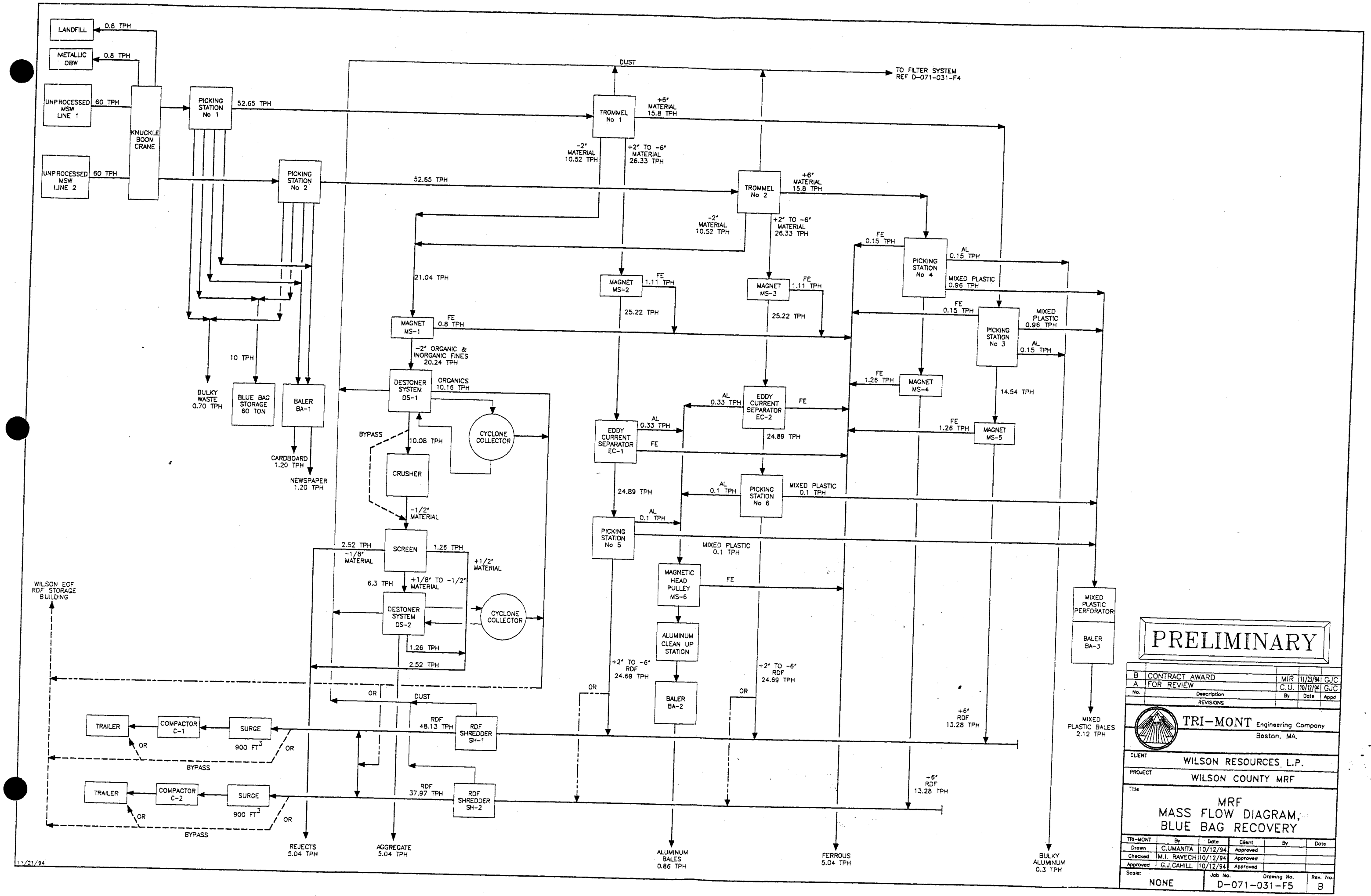

PRELIMINARY

No.	Description	By	Date	Appd
B	CONTRACT AWARD	MIR	11/23/94	GJC
A	FOR REVIEW	C.U.	10/12/94	GJC

REVISIONS

TRI-MONT Engineering Company
Boston, MA.

CLIENT: WILSON RESOURCES, L.P.

PROJECT: WILSON COUNTY MRF

Title: MRF MASS FLOW DIAGRAM, BLUE BAG RECOVERY

TRI-MONT	By	Date	Client	By	Date
Drawn	C.UMANITA	10/12/94	Approved		
Checked	M.I. RAVECH	10/12/94	Approved		
Approved	G.J.CAHILL	10/12/94	Approved		

Scale: NONE | Job No. | Drawing No. D-071-031-F5 | Rev. No. B

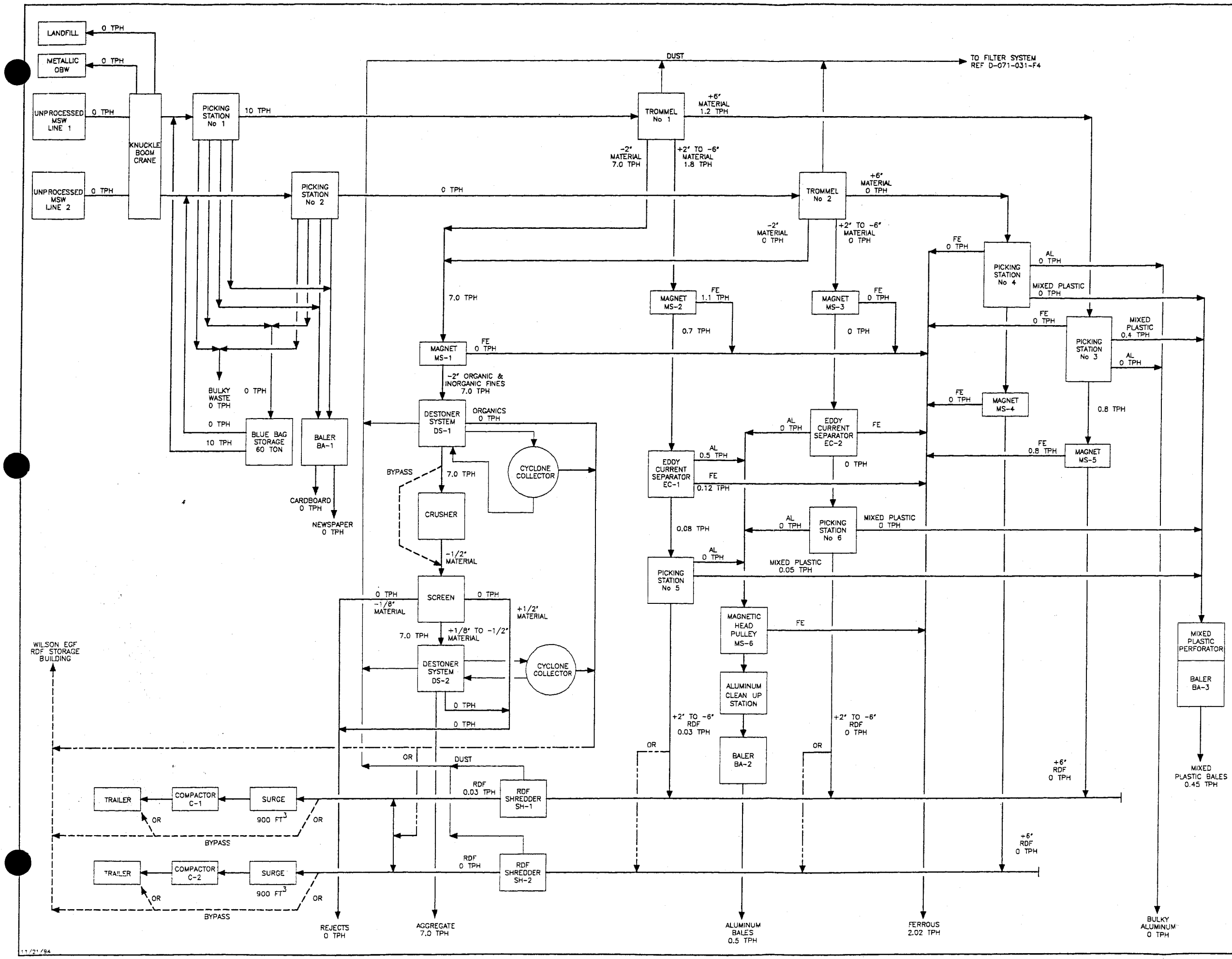

PRELIMINARY

No.	Description	By	Date	Appd
A	CONTRACT AWARD	MIR	11/23/94	GJC

REVISIONS

TRI-MONT Engineering Company
Boston, MA.

CLIENT: WILSON RESOURCES L.P.

PROJECT: WILSON COUNTY MRF

Title: MRF MASS FLOW DIAGRAM, BLUE BAG PROCESSING ONLY

TRI-MONT	By	Date	Client	By	Date
Drawn	MIR	11/21/94	Approved		
Checked	G.J.MORIN	11/21/94	Approved		
Approved	G.J.CAHILL	11/21/94	Approved		

Scale:	Job No.	Drawing No.	Rev. No.
NONE		D-071-031-F6	A

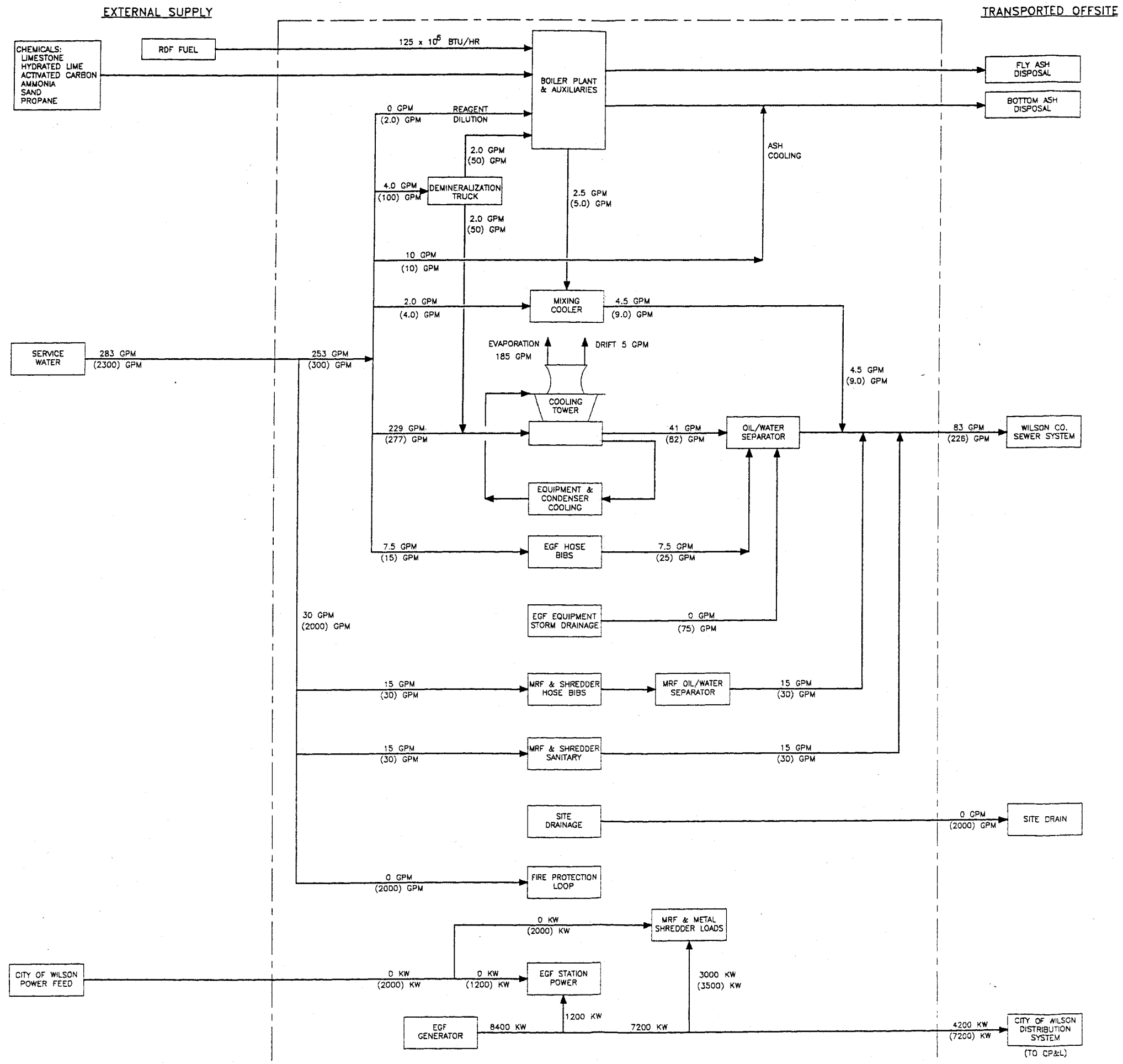

2 GPM ——— INDICATES AVERAGE FLOW
(4) GPM ——— INDICATES PEAK FLOW

PRELIMINARY

No.	Description	By	Date	Appd
B	CONTRACT AWARD	MIR	11/23/94	GJC
A	FOR REVIEW	HC	11/17/94	GJC

REVISIONS

TRI-MONT Engineering Company
Boston, MA.

CLIENT: WILSON RESOURCES L.P.

PROJECT: WILSON COUNTY MRF

Title: MATERIAL BALANCE DIAGRAM

TRI-MONT	By	Date	Client	By	Date
Drawn	HC	11/17/94	Approved		
Checked	G. MORIN	11/17/94	Approved		
Approved	G.J. CAHILL	11/17/94	Approved		

Scale: NONE | Job No. | Drawing No. D-071-031-B1 | Rev. No. B

12/1/94

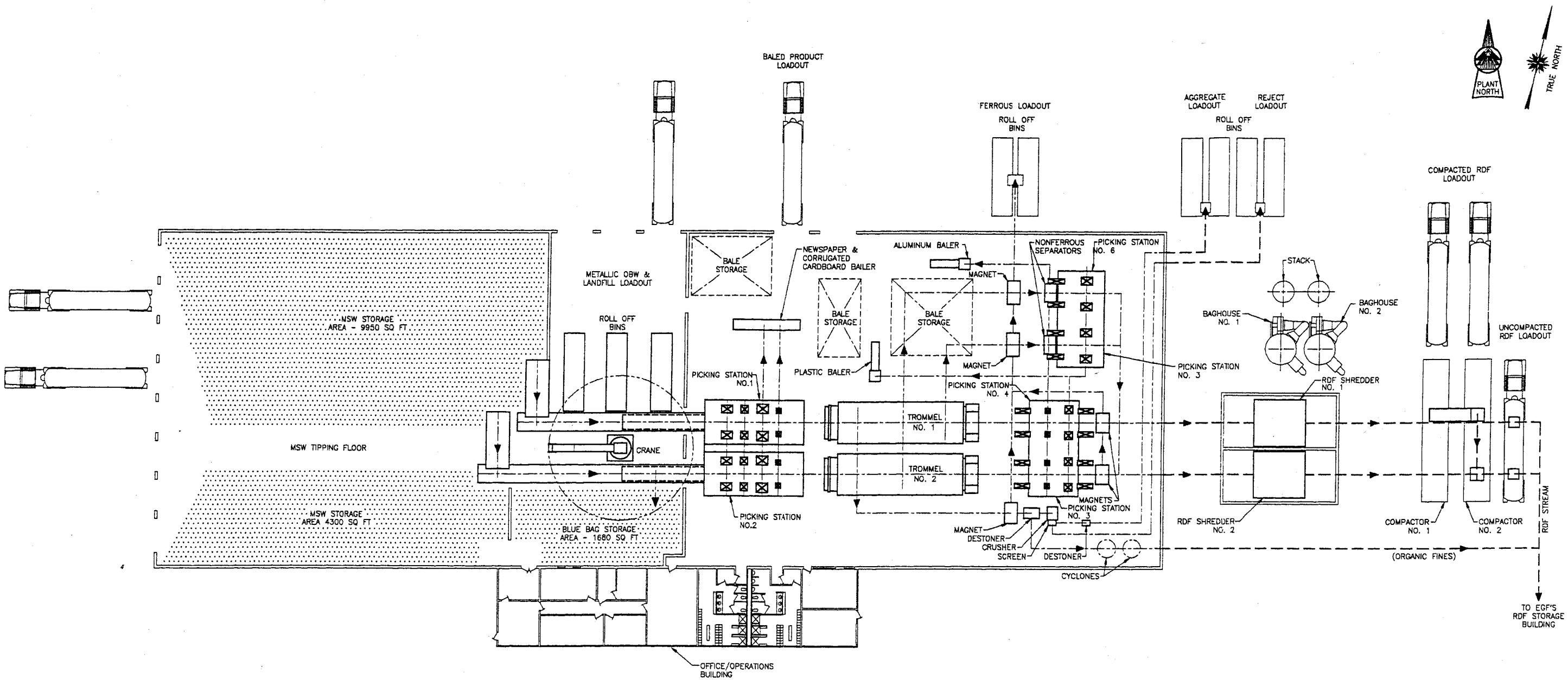

PRELIMINARY

LEGEND:
- - - - - - COVERED CONVEYOR

0 10 20 40 60 80
SCALE: 1"=20'

No.	Description	By	Date	Appd
F	CONTRACT AWARD	HC	11/23/94	GJC
E	FOR BID	HC	8/31/94	GJC
D	FOR BID	HC	7/15/94	GJC
C	FOR BID/PERMIT	C.U.	6/24/94	GJC
B	SPECIAL USE PERMIT	C.U.	6/9/94	GJC
A	FOR REVIEW	C.U.	5/13/94	GJC

REVISIONS

TRI-MONT Engineering Company
Boston, MA.

CLIENT: WILSON RESOURCES L.P.

PROJECT: WILSON COUNTY MRF

Title: MRF EQUIPMENT LOCATION PLAN

TRI-MONT	By	Date	Client	By	Date
Drawn	C.UMANITA	4/19/94	Approved		
Checked	M.I.RAVECH	4/20/94	Approved		
Approved	G.J.CAHILL	4/29/94	Approved		

Scale:	Job No.	Drawing No.	Rev. No.
1"=20'	D-071-031-M1		F

12/1/94

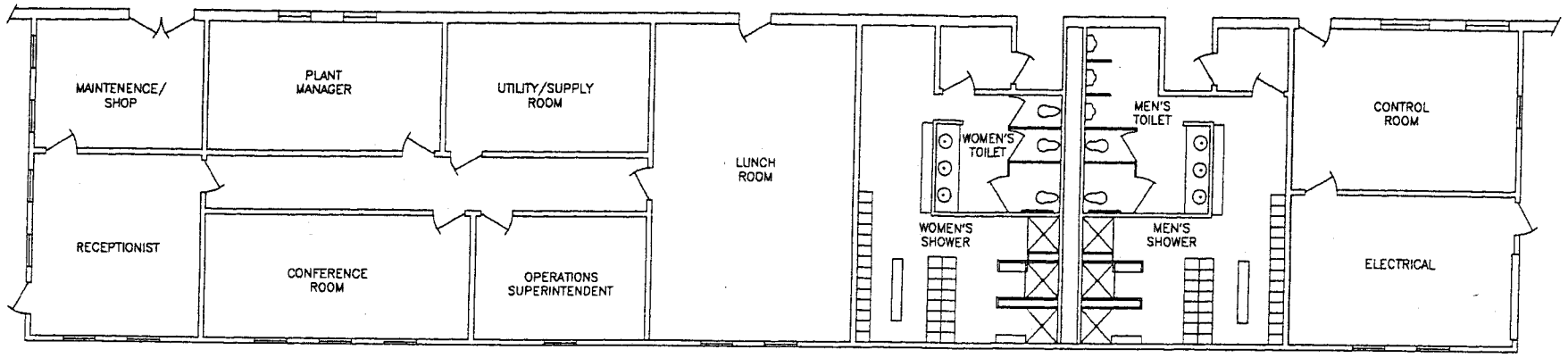

GROUND FLOOR PLAN
OFFICE/OPERATIONS BUILDING

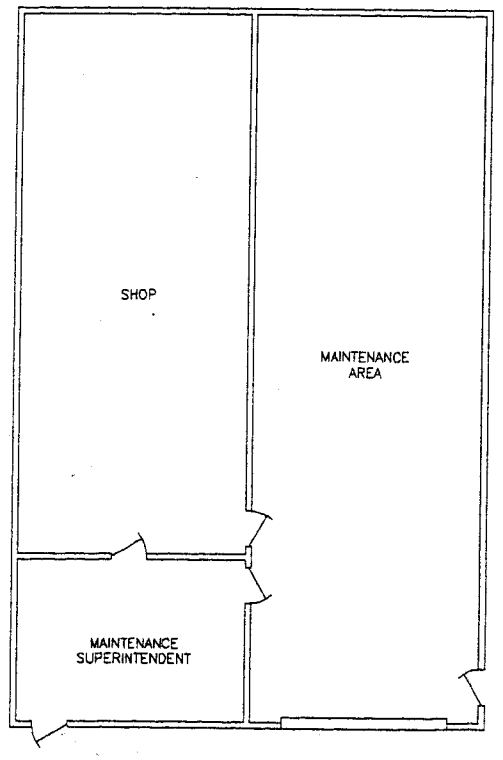

GROUND FLOOR PLAN
VEHICLE MAINTENANCE BUILDING

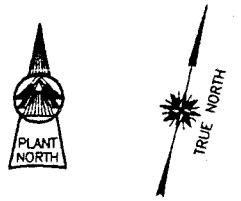

NOTE:
DRAWING IS FOR AREA ALLOCATION ONLY.

PRELIMINARY

0 1 5 10 15 20 25 30
SCALE: 1/8"=1'

No.	Description	By	Date	Appd
A	CONTRACT AWARD	HC	11/23/94	GJC

REVISIONS

TRI-MONT Engineering Company
Boston, MA.

CLIENT: WILSON RESOURCES L.P.

PROJECT: WILSON COUNTY MRF

Title: FLOOR PLANS
OFFICE & MAINTENANCE
BUILDING

TRI-MONT	By	Date	Client	By	Date
Drawn	H. CLEMENS	11/30/94	Approved		
Checked	M.I. RAVECH	11/30/94	Approved		
Approved	G.J. CAHILL	11/30/94	Approved		

Scale:	Job No.	Drawing No.	Rev. No.
1/8"=1'-0"		D-071-031-S1	A

12/1/94

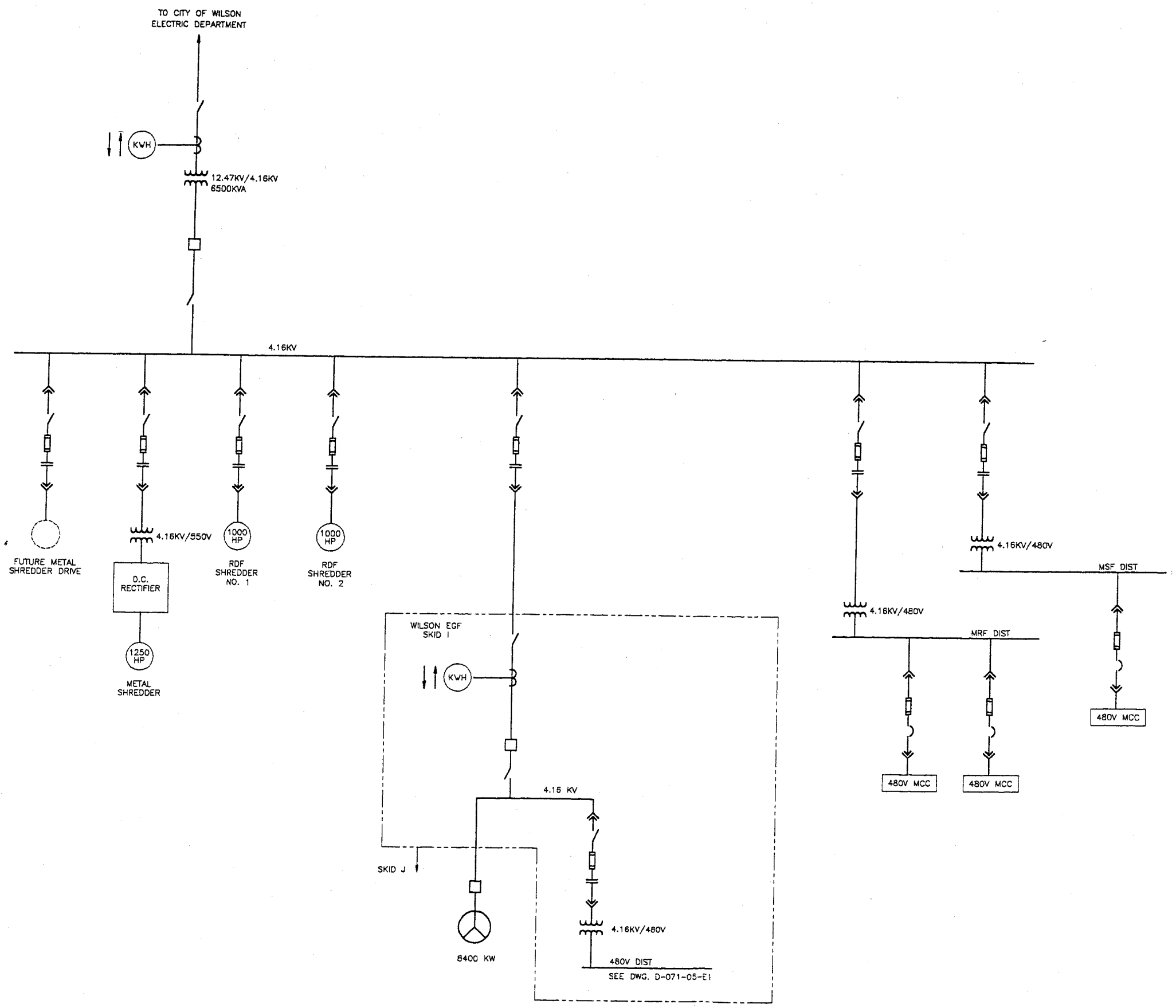

PRELIMINARY

No.	Description	By	Date	Appd
F	CONTRACT AWARD	MIR	11/23/94	GJC
E	ADDED "BY OTHERS"	HC	10/25/94	GJC
D	REMOVED METAL SHREDDER	CU	10/12/94	GJC
C	FOR BID	HC	7/15/94	GJC
B	FOR BID/PERMIT	C.U.	6/24/94	GJC
A	FOR REVIEW	C.U.	5/13/94	GJC

REVISIONS

TRI-MONT Engineering Company
Boston, MA.

CLIENT: WILSON RESOURCES L.P.

PROJECT: WILSON COUNTY MRF

Title: ELECTRICAL ONE-LINE DIAGRAM

TRI-MONT	By	Date	Client	By	Date
Drawn	H.CLEMENS	5/2/94	Approved		
Checked	G.J.MORIN	5/6/94	Approved		
Approved	G.J.CAHILL	5/6/94	Approved		

Scale:	Job No.	Drawing No.	Rev. No.
NONE		D-071-031-E1	F

12/1/94

SCOPE OF WORK
AND
BASIS FOR DESIGN
ENERGY GENERATION FACILITY SKIDS

1.00	INTRODUCTION		
2.00	DESCRIPTION OF SKID MOUNTED EGF CONCEPT		
3.00	BASIS OF EGF OPERATION		
4.00	CODES AND STANDARDS		
5.00	GENERAL SKID REQUIREMENTS		
6.00	SKIDS A AND B	-	FUEL RECEIVING AND STORAGE
7.00	SKID C	-	FUEL METERING TO BOILER
8.00	SKID D-1	-	FORCED DRAFT FAN SKID
9.00	SKID D-2	-	REAGENT STORAGE
10.00	SKIDS E AND F	-	COMBUSTOR/STEAM GENERATOR
11.00	SKID G	-	AIR POLLUTION CONTROL SYSTEM
12.00	SKID H	-	INDUCED DRAFT FAN AND STACK
13.00	SKID I	-	SWITCHGEAR AND STATION SERVICE TRANSFORMER
14.00	SKID J	-	STEAM TURBINE GENERATOR
15.00	SKID K	-	COOLING TOWER
16.00	SKID L-1	-	DEAERATING HEATER AND FEEDWATER SYSTEM
17.00	SKID L-2	-	CONDENSER AND CONDENSATE SYSTEM
18.00	SKID M	-	PLANT AUXILIARY SKID
19.00	SKID N	-	CONTROL ROOM/EMPLOYEE FACILITIES
20.00	SKID O-1	-	BOTTOM ASH COLLECTION
21.00	SKID O-2	-	FLY ASH COLLECTION
22.00	SKID P	-	START-UP FUEL STORAGE

NEW
SECTION
4

1.00 INTRODUCTION

1.01 The purpose of this SECTION is to provide general design criteria to the Contractor which must be met in his implementation of the detailed design of the project. No relaxation of the requirements contained in this SECTION shall be permitted without the express written consent of the Owner.

1.02 The Contractor may provide alternatives to the design described in this SECTION provided that the performance and standards of quality and operational flexibility specified below are maintained. Alternatives which enhance reliability are encouraged.

1.03 This SECTION discusses the construction requirements for individual skids to be designed for a variety of applications as an energy generating facility (EGF). SECTION 0059 will describe the site specific and specialized conditions to be met by a combination of the skids described herein. The requirements of SECTION 0059 override any requirements stated in this SECTION 0058.

1.04 The detailed designs proposed by the Bidder shall provide for secondary equipment redundancy in the event of equipment failure to permit plant operation to continue. Designs shall be highly automated and be based on facility operation with minimum of operating personnel. Designs proposed shall permit rapid and easy operator exit in the event of serious equipment malfunction. Systems, equipment, and material handling systems proposed shall have had at least three years operating experience.

1.05 The major design objectives of the EGF using Refuse Derived Fuel (RDF) are to:

A. Provide the capability to burn RDF to create 640 psia/754°F superheated steam for either process use or electricity production, 24 hours/day, 7 days/week.

B. Provide the capability, if desired, to produce approximately 8.4 MW of electricity 24 hours/day, 7 days/week.

C. Supply steam to a process user at any desired pressure or temperature below main steam conditions.

D. Create a highly adaptable power plant with skids designed such that they can be adapted to multiple applications with a minimum of modification.

E. Build the plant components such that a minimum of field work will be required to complete the plant.

2.00 DESCRIPTION OF SKID-MOUNTED EGF CONCEPT

2.01 EGF skids shall be designed to maximize potential applications with minimum, if any, modifications from project to project. It is anticipated that several plants with differing configurations will be constructed in parallel. Two basic configurations shall determine equipment capacity requirements.

2.02 The first configuration is the steam only option, where the boiler will produce steam for export to a customer.

2.03 The second configuration is the power option. A single 8,400 kW (nom.) steam turbine generator complete with condenser, cooling tower and auxiliaries will be provided as a part of this configuration. This option will share skid designs as much as possible with the boiler option.

2.04 Specific site conditions (SECTION 0059), such as the proximity to a fuel supply, availability of natural gas for boiler startup, and the availability of demineralized water from a customer, will determine the skids used in a specific application.

3.00 BASIS OF EGF OPERATION

3.01 The EGF shall be designed for a minimum annual capacity factor of 90% for 15 years. It is anticipated that the facility's annual outage shall be for a duration of two weeks (336 hours). Scheduled and unscheduled outages during the remainder of the year are not expected to exceed 540 hours.

3.02 The plant shall be designed to produce steam and/or electricity at full capacity 7 days a week, 24 hours per day. The Contractor's design shall recognize this mode of operation and provide technical features to facilitate steady operation at full output while meeting all environmental requirements.

3.03 The Performance Guarantees called for in SECTION 0081 require specified levels of performance under specific operating conditions. The conditions so specified shall be the Guarantee Conditions. The Design Conditions of the plant shall contain sufficient and suitable margins within components and systems such that the ability of the turbine generator to operate continuously at its Guarantee Conditions shall not be compromised due to deterioration of equipment as it ages. In order to provide for this all systems shall be designed with margins that shall permit the turbine generator to operate continuously at 5% above its rated steam throttle pressure and with its throttle valves wide open (5% OP, VWO).

3.04 In addition to permitting 5% OP, VWO operation, all systems involved in the processing of fuel and combustion gas shall recognize the variability in refuse derived fuels (RDF) and be designed to handle such fuel.

3.05 The Contractor shall provide design margins on pollution control equipment to permit full operation of the plant within permit limits over its entire life. The final permits shall be made part of the site specific design specifications.

4.00 CODES AND STANDARDS

4.01 The design, manufacture, erection and start-up of equipment and systems shall be in accordance with governing Codes and Standards.

4.02 The governing Codes and Standards shall be those that are in effect at the time the Contract is signed. When two or more codes describe a given requirement, the more strict requirement shall be used.

4.03 All applicable local, state and federal requirements and permit conditions shall be complied with by the Contractor unless specified otherwise. Use of asbestos shall not be permitted for any application.

4.04 The detailed design of each system and equipment specification shall contain reference to the specific code or standard to which the item is designed. In general, the following Codes and Standards shall apply.

- American Society of Mechanical Engineers (ASME)
- National Solid Waste Management Association (NSWMA)
- Solid Waste Association of North America (SWANA)
- American Society of Civil Engineers (ASCE)
- American National Standards Institute (ANSI)
- a. Dimensional Specifications as applicable
- American Society of Testing and Materials (ASTM)
  - a. Material Specifications as applicable
  - b. Sampling and Testing Standards as applicable
  - c. RDF - ASTM E1126
- American Chain Association (ACA)
- American Welding Society (AWS)
- American Water Works Association (AWWA)

- American Iron and Steel Institute (AISI)
- Crane Manufacturers Association of American (CMAA)
- Thermal Insulation Manufacturers Association (TIMA)
- National Fire Protection Association (NFPA)
  - a. National Electrical Code
  - b. Fire Protection Codes as appropriate
- Institute of Electric and Electronics Engineers (IEEE)
- National Electrical Manufacturers Association (NEMA)
- National Electrical Safety Code (NESC)
- American Association of State Highway and Transportation Officials (AASHTO)
- Steel Structures Painting Council (SSPC)
- American Institute of Steel Construction (AISC)
- American Concrete Institute (ACI)
- American Society of Heating, Refrigerating, and Air Conditioning Engineers (ASHRAE)
- Manufacturers Standardization Society (MSS)
- Metal Building Manufacturers Association (MBMA)
- Compressed Air and Gas Institute (CAGI)
- Conveyor Equipment Manufacturers Association (CEMA)
- Industrial Gas Cleaning Institute (IGCI)
- BOCA National Building Code (BOCA)
- Instrument Society of American (ISA)
- Environmental Protection Agency (EPA)
- Occupational Safety and Health Administration (OSHA)

- Factory Mutual System (FM)

  a. Handbook of Industrial Loss Prevention

  b. Factory Mutual Approval Guide

- Underwriters Laboratories Inc. (UL)

  UL Products Lists (where not FM listed)

5.00 GENERAL SKID REQUIREMENTS

5.01 Base assumptions for design:

A. Site specific conditions may warrant changes to the plant and/or skid designs. The following criteria shall describe the base unit. Modifications to these parameters will be minimal, but some changes may be made on a case by case basis. Modifications to the base design are described in SECTION 0059.

B. Temperature for design of insulation and freeze protection shall be 10°F.

C. Design wet bulb temperature shall be 76°F.

D. Plant shall be an outdoor installation. Corrosion, freeze, and solar protection shall be designed accordingly.

E. Maximum sound level as measured 5 ft away from any skid shall be 85 dBA.

F. Plant lighting will be mounted on the individual skids. Light intensity shall be 30 foot-candles at any work or maintenance area. Off-skid lighting for security purposes shall be constructed as part of the site specific scope.

G. Stack height shall be 105 ft consisting of three flanged sections. Refer to SECTION 0059 for any difference in stack height at the application site.

H. Combustion and fuel handling equipment shall be designed on the basis of the following analysis.

1. Design Fuel

The boiler shall be designed to accept the following range of fuels:

Element	Wet Basis	Dry Basis	Design Span
Carbon, %	31.00	42.55	
Hydrogen,%	4.17	5.72	
Nitrogen,%	0.49	0.67	≤0.67 Dry Basis
Oxygen,%	22.72	31.18	
Sulfur	0.19	0.26	≤0.26 Dry Basis
Chlorine,%	0.66	0.91	≤0.91 Dry Basis
Moisture,%	27.14	0.00	20-35%
Pb,ppm			≤1400 Dry Basis
Cd,ppm			≤5 Dry Basis
As,ppm			≤6 Dry Basis
Cr, ppm			≤100 Dry Basis
Hg,ppm			≤1.5 Dry Basis
Be,ppm			≤1.0 Dry Basis
Ash,%	13.63	18.71	13-23 Dry Basis
HHV, Btu/lb	5340	7331	

2. Warranty Fuel

The boiler shall be warranted to accept the following range of fuels:

Element	Span
Carbon,%	No Specific Range
Hydrogen, %	No Specific Range
Nitrogen, %	≤0.80 Dry Basis
Oxygen,%	No Specific Range
Sulfur,%	≤0.50 Dry Basis
Chlorine,%	≤0.91 Dry Basis
Moisture,%	20-35%
Ash,%	13.23 Dry Basis

3. Fuel Physical Parameters

a. Weight - See Paragraph 5.03
b. Particle Size: 2" mean

5.02 PIPING SYSTEMS

A. Special piping requirements for all skid units.

1. Piping shall be designed and terminated such that the skid does not exceed the shipping dimensions as described in paragraph 5.03.

2. Pipe which will connect to other skids shall be designed such that it may be run in several directions as individual applications dictate. Pipe elbows terminated vertically is a suggested method of achieving this goal.

3. Contractor shall generate several alternative skid arrangements to verify the ability of the skids to be configured in a variety of layouts. Owner shall review alternative arrangements.

4. Pipe connecting to other skids shall be terminated near the skid boundary. Class 150 piping shall be flanged. Class 300 and higher piping shall be weld end connections.

5. Piping between skids shall be kept at an elevation of 8 ft above grade for walkways.

B. Piping systems, including pipe, flanges, bolting, gaskets, valves, relief devices and fittings, shall be designed in accordance with the Power Piping Code, ANSI B31.1 ("the Code").

C. All piping systems shall be designed for inherent flexibility. The use of expansion joints shall be avoided.

D. Piping loads on equipment shall be determined and verified not to exceed manufacturer's allowable load specifications.

E. Main Steam and Feedwater Systems

1. For piping in these systems 2-1/2 inch diameter and larger, the following analysis shall be performed using computer techniques:

a. Thermal flexibility analysis.

b. Dead weight analysis which defines support points, loads and deflections.

c. Transient analysis for the following:

- Seismic analysis using the equivalent static type analysis with accelerations dictated by applicable codes.

- Safety valve discharge transient loading analysis.

d. Stress summaries for the above to satisfy code requirements.

2. For piping in these systems 2 inch diameter and smaller, either computer techniques or Code approved manual techniques shall be used to assure adequate flexibility and support.

3. NDE inspection of welds on this piping shall conform to ANSI B31.1.

F. Piping Systems with Temperature Greater than 250°F

1. Piping in these systems 2-1/2 inch diameter and larger, shall have the following analysis performed using computer techniques:

   a. Thermal flexibility analysis.

   b. Dead weight analysis which defines support points, loads and deflections.

   c. Stress summaries for the above to satisfy Code requirements.

2. For piping in these systems 2 inch diameter and smaller either computer analysis using techniques or Code approved manual techniques shall be performed to assure adequate flexibility and support.

G. Piping Systems and Temperature Less Than 250°F

Piping in these systems shall be analyzed using either computer techniques or Code approved manual techniques to assure adequate flexibility and support.

H. Pressure Boundary

The pressure integrity of all piping systems shall be designed in accordance with the appropriate Code with a minimum design allowance of 1/16 inch on wall thickness. Extra wall thickness shall be provided for such lines as flashing condensate returns or, as needed, for sound attenuation after pressure reducing stations.

I. Pipe Sizing

Pipe sizes shall be determined primarily on the basis of allowable pressure drop for the service, but the following velocity limits shall apply:

Water Other Than Boiler Feed

6" NPS and above	15 ft/sec.
4" NPS and below	10 ft/sec.

Boiler Feed

Suction	7 ft/sec.
Discharge	15 ft/sec.

Steam

Dry or Superheated	200 ft/sec.
Wet	100 ft/sec.

J. End Connections

Pipe line run size need not necessarily match equipment connections. Outlets from vessels that are below the water line should be at least 25 percent larger in diameter than the pipe line to reduce pipe inlet losses and air or vapor entrainment. Inlets to heat exchangers may be enlarged to reduce impingement velocities and obtain better distribution. Where pump suction connections are smaller than the line, eccentric reducer (with off-set below the centerline of pump connection) shall be used to avoid an air pocket at the inlet connection.

K. Valves

1. Valve body materials shall comply with the pressure temperature class for each system. Where stainless steel is used for stems, discs and seat facings material shall be AISI Type 410, 420 or ASTM A182, Grade F6a. Use of cast iron valves is discouraged for use in any application.

2. Valve bodies and bonnets shall be suitable to support valve operators (handwheel, gear, motor or pneumatic) with the valve in any position, without external support.

3. Globe and gate valves shall be of the outside screw and yoke design with backseating construction. Globe valves of the T-pattern type are preferred. Check valves shall be of the swing or stop check type.

4. Use of reduced size ports is discouraged.

5. Gear operators shall be provided for globe and gate valves over 12-inch size.

6. Each valve shall be assigned a unique valve number by the Contractor and have a permanent stamped metal tag bearing the valve number securely attached to the valve.

L. Installation Guidelines

1. Pipe in storage shall have ends plugged or capped and shall be stored off the ground. Prior to fabrication in the shop or field, scale or any foreign material shall be blown or swabbed from the interior of the pipe. After fabrication, all open ends shall again be plugged, capped or otherwise sealed. All loose filings, slag, sand, dirt, oil, grease or other foreign substances shall be removed from the interior and exterior surfaces of all pipe or pipe fabrication prior to installation.

2. Lines shall be run level or pitched to conform local requirements, providing one or, if necessary, two or more low spots in each line with provisions at the low point or points for draining the line. Vent valves, with provision for locking and sealing closed, shall be installed in high points of pipe lines where necessary to prevent air pockets.

3. Routing for piping runs indicated schematically or diagrammatically on piping drawings shall be reviewed by Contractor in conjunction with existing field conditions and requirements of all other systems, equipment, and services to be installed.

4. Piping which is indicated schematically or diagrammatically on piping arrangement drawing shall be installed with proper allowances for insulation, headroom, equipment, removal, and venting or drainage as necessary by first class piping practice.

5. Changes in direction of pipe lines shall be made only with fittings. Changes in size shall be made only with fittings. Miter fittings, face or flush bushings, or street elbows shall not be used.

6. Use of different wall thickness for same size pipe in any particular piping system shall not be accepted.

7. Socket welding and threaded connections on pipe lines shall be made by forged outlet fittings. Fittings shall be of sufficient weight to satisfy reinforcement requirements and pressure temperature ratings compatible with pipe to which it is to be attached. Holes in pipe headers made for these connections shall be drilled to same size as fitting inside diameter. All

burrs shall be removed and threaded fittings shall be retapped after welding.

8. Flanged or welding nozzles, branch connections, welding outlets, adapters and taps shall be true and faced at right angles to axis of pipe to insure accurate fit. Connections shall not extend inside pipe.

9. All pipe shall be cut to exact measurement and installed without springing or forcing. Particular care shall be taken to avoid creating, even temporarily, undue loads, forces or strains on valves, equipment or skid elements with piping connections or piping supports.

10. Valves shall be installed in accordance with manufacturer's recommendations. Where orientation is not indicated, install valves with stems horizontal on vertical runs or extending vertically upward on horizontal runs. All valves shall be installed in accessible locations for operation as well as for removal, repair or replacement.

11. Full lengths of pipe shall be used where length between fittings is less than the mill random lengths of pipe. Extra joints shall be avoided.

12. Piping shall be accurately installed. All vertical piping shall be installed plumb. Exceptions are shown on the Drawings.

13. Use of welded connections shall be maximized.

M. Welding and Workmanship

1. Welding ground returns must be placed on the material being welded and closely adjacent to the arc.

2. Where possible, all welding shall be carried out in the down-hand position.

3. Manual welding shall be done by the shielded or inert gas metal arc process, except for carbon steel pipe sizes 2" or smaller (outside diameter) where oxyacetylene gas welding may be used.

4. Approved automatic or semi-automatic processes may also be used. Cracks of any size are prohibited. Projections of weld metal into the pipe bore shall not exceed 1/16" for 8" or smaller or 1/8" for larger pipe.

5. Backing rings shall not be used.

6. Electrode material for welding carbon steel pipe shall be equal to AWS A5.1, latest edition, Class E6010 for D.C., E6011 for A.C. or D.C. When the thickness of a butt weld or the throat of a fillet weld exceeds 1/2", filler metals producing low hydrogen deposits shall be used. However, cellulose or rutile type coated electrodes may be used for root passes regardless of wall thickness or throat dimension.

7. Use of slip-on flanges is discouraged. Where used, slip on flanges shall be positioned so that the distance from the face of the flange to the pipe end shall approximate the nominal pipe wall thickness plus 1/8". The internal seal weld shall be applied so that the flange does not require refacing. The maximum out of alignment of flanges from the required position shall be 1/32" measured across the diameter.

8. Weld end preparation for all field weld pipe joints shall be in accordance with ANSI B16.25 or Contractor's qualified procedure.

9. All welding on metal piping shall be performed in accordance with a procedure specification which has been qualified in accordance with Section IX of ASME Boiler and Pressure Vessel Code.

10. All welding operators on metal piping shall be qualified in accordance with Performance Qualification Specification prescribed by Section IX of ASME Boiler and Pressure Vessel Code.

N. Pipe Supports

1. Supports shall be constructed to permit free movement of the pipe as may be caused by thermal expansion, contraction or other causes and to prevent damage by frost action.

2. Wherever possible, pipe shall be supported from the skid structure, minimizing the need for independent, field erected pipe supports.

3. Support points shall be selected on the basis of proper location and spacing for optimum load distribution and weight balance, taking into consideration available structures. Spacing shall be limited so as to prevent excessive sag, bending and shear stresses in the piping, and to keep within the allowable structure loading limitations.

4. Insulated pipelines shall be supported on pipe supports sized to fit the outside diameter of the pipe and insulation. Protection saddles, where used, shall be of commercial manufacture fabricated of curved steel plate.

5. Spacing Horizontal Piping (Maximum)

Pipe Size ((Inches))	Maximum Spacing (feet)
1/2-3/4	5
1	7
1-1/2	9
2	10
2-1/2	11
3	12
4	14
6	17
8	22
10	28
12	32

6. Where multiple runs of pipe use common supports, the smallest diameter shall govern the maximum span between bents except that pipes 6" and larger may be fitted with brackets to support smaller pipes which have a diameter not greater than one-fourth that of the supporting pipe.

O. Non-Destructive Examination

1. Contractor shall make use of non-destructive examination procedures as described in Section V of the ASME Boiler and Pressure Vessel Code.

2. Inspection personnel shall have specific experience in the types of tests required. Use of an outside inspection agency is not required but is preferred. Contractor shall submit the qualifications of the inspection personnel to the Owner for approval.

3. Intensity of inspection shall be as follows:

Visual Inspection (VT)	-	All welds
Magnetic Particle (PT)	-	Per B31.1
Liquid Penetrant (PT)	-	Per B31.1
Radiography (RT)	-	Main steam and feedwater welds per B31.1.

Ultrasonic (UT)	-	Selected applications
Leak Testing (LT)	-	Per B31.1
Initial Services Testing	-	All piping

4. Limitations on imperfection for all examinations shall meet the requirements in ANSI B31.1.

5. Contractor, at his expense, shall cut out, repair and retest by radiography all welds shown defective by non-destructive examination and/or hydrostatic (LT) test.

P. Leak Testing

1. Pressure shall be applied to the systems prior to application of insulation. Pressure shall be maintained while all joints are thoroughly examined for leaks. All leaks shall be promptly repaired and the system retested.

2. All pneumatic instruments shall be isolated, the instrument lines shall be pressurized to instrument air supply pressure and "soap" leak checked.

3. Other than instrument piping, pneumatic testing shall not be used.

4. Hydrostatic testing shall be done in accordance with ANSI B31.1. Owner's representative shall be notified of shop or field hydrostatic tests in advance.

Q. Pipe Insulation

1. Insulation shall be provided to conserve heat energy, provide personnel protection from hot surfaces and prevent nuisance water condensation on cold surfaces.

2. All hot parts shall be covered with calcium silicate of a suitable thickness. Flat surfaces, cylindrical surfaces and irregular surfaces shall be lagged with aluminum or stainless steel, properly sealed. Equipment and valves requiring frequent access for maintenance shall be provided with easily removable and reusable blanket insulation and lagging systems. Mineral wool shall be used only on flat surfaces (i.e., ductwork) or as covered removable blankets.

3. Insulation thickness shall be dictated by system temperature, economic sensitivity to energy loss and outside lagging temperature limitation. Surface temperature of lagging or insulation shall not be more than 45°F above ambient

temperature. Ambient temperature shall be measured at least 3 feet from the insulated surface.

4. Insulation for personnel protection shall extend from the skid base to an elevation eight feet above this level.

5. All parts where the exposed surface temperature shall be below the expected dew point temperature and the resulting condensation would be a nuisance, shall be insulated with polyurethane of suitable thickness and covered with vapor barrier jacketing.

6. Asbestos materials shall not be used in any insulation system.

R. Heat Tracing

1. Electric heat tracing shall be installed on any pipe which has the potential for freezing. This shall include water lines, drain lines or instrument lines.

2. Each skid shall have a heat trace control panel, complete with thermostatic control and multiple trace loops. Trace loops shall not include pipes which under normal circumstances, have greatly different fluid temperatures. Control panel shall include additional wattage capacity of at least 100% for off-skid piping.

3. Off-skid piping requiring tracing shall be supplied from an adjacent skid.

4. Cable shall be self-limiting type controlled by line sensing thermostat.

5.03 Structural Requirements

A. Codes and Standards: Design loads shall conform to the requirements of the following references except where exceeded by other provisions of this basis of design.

1. BOCA National Building Code
2. Loss Prevention Data, Factory Mutual System
3. Occupational Safety and Health Act (OSHA)

B. Structural analysis, design procedure, allowable stresses and load factors shall be based on the following Codes and Specifications:

Structural Miscellaneous Steel

"Specification for the Design, Fabrication, and Erection of Structural Steel for Buildings" of the American Institute of Steel Construction (AISC).

C. Loads

1. Dead Loads: skid loads shall include the actual weight of the mechanical piping, equipment loads and ductwork, plus a significant design margin.

a. Supported Concrete Slab	Self-weight
b. Grating - 1-1/4 x 3/16	10 psf
c. Framing	15 psf
d. Checkered Plate 3/8" Thick	17 psf
e. Elec. Conduits, Lights, etc.	10 psf
f. Piping, Mechanical	25 psf

2. Live Loads: The following minimum unit live loads shall be used for the specific areas:

a. Roofs and Exposed Horizontal Surfaces: A 50 psf general live load.

b. Stairways and Platforms 100 psf

c. Walkways 60 psf

d. Equipment Loads: As required.

e. RDF Fuel Weight

(1) 15 pcf (compacted) for volume calculations
(2) 25 pcf for weight calculations. In addition, check RDF fuel metering bin filled with water and use 33% increase in allowable stresses for this load case.

f. Wind Loads

Wind loads shall be based upon BOCA Building Code for basic wind speed of 100 mph, 50 year mean recurrence.

g. Seismic Design

Seismic design shall be in accordance with the BOCA National Building Code for Zone 3.

h. Impact loads (as percentage of static loads)

(1) Light machinery shaft or motor driven, 20%
(2) Reciprocating machinery or power driven limit, 50%
(3) Hangers for floor, etc., 33%

D. Construction Materials

Structural Steel

a. Type A36 unless unusual loads warrant a higher strength steel to be used.

b. Design according to AISC Code, simple framing (Type 2 Construction)

c. Connections

(1) A325 high strength bolts (marked as such)

(2) E70 welding electrodes

d. Deflection

The lateral deflection of any structure from wind loading shall be limited to maximum of 0.0025 x height of the structure.

e. Grating Floors: 1-1/4" x 3/16" bearing bar grating, galvanized.

f. Checkered Plate Floor: 3/8" thick multi-grip floorplate, galvanized.

g. Coating: All exposed steel shall be galvanized in accordance with ASTM A-385/386. Any epoxy coatings proposed as an alternative must be approved by the engineer.

E. Special Structural Design Considerations

1. Each skid shall be portable, meaning it can be transported using a flat bed truck or rail car. Skid structure shall be sufficient to support its equipment under loads incurred during transportation, placement and assembly. Gusseted eyelets for crane hooks shall be provided on each skid.

2. Maximum Dimensions and Weight

   a. It is desired that the majority of the skids be designed to be transported without a special overweight or wide load permit. These skids shall have maximum dimensions of 12 ft high x 9.5 ft wide x 50 ft long and a maximum weight of 60,000 lbs.

   b. Some skids will be unable to meet the criteria above. No skid shall exceed 20 ft high x 16 ft wide x 70 long and 100,000 lbs in weight.

5.04 Electrical Systems

A. General Description

Each skid, or as an alternative, group of skids which will always be offered together, shall have an independent electrical system accepting 480V, 3 ph power from Skid I. System shall include motor starters, a 480/208 VAC transformer for lighting and small motors, and circuit breakers as required.

1. For skids with three motors or less, independent starters may be supplied adjacent to motors as an alternative to a central MCC.

2. The electrical system shall receive power from the host's system through Skid I for all skids in the EGF. In the power option, the system shall carry the generator net output to the host's electrical system.

3. Voltage insulation levels, interrupting capacities, continuous current capacities, circuit protection, and mechanical strengths shall be selected and coordinated in accordance with calculations and the recommendations of IEEE, NEMA, IPCEA, ANSI and NFPA. System protective devices (relays, fuses, breaker trip unit, etc.) shall be selected and coordinated to insure that the interrupter nearest the point of short circuit (or high overload) shall open first and minimize disturbances on the rest of the system.

4. An electrical "ride-through" feature is required on the power systems. The system is to allow for a one second ride-through or automatic restart of voltage dips of 50% for 20 cycles.

5. All work shall conform to the latest edition of the National Electrical Code (NFPA 70).

B. Metering

Metering shall be provided on Skid I to measure the amount of electricity supplied to the skids from the host's system as well as generated electricity supplied to the host's system on a time of day basis.

C. Distribution

1. System Capacity and Design Criteria

a. The distribution system shall be designed with a sufficient capacity to carry the maximum kVA generated and/or used for station service. Circuit breakers shall have sufficient continuous current capacity and short-circuit capacity for system operation and protection.

b. Optimum design of the 4.16 kV distribution system as well as power distribution equipment for lower voltage levels must be demonstrated by contractor's calculations submitted to the Owner prior to final selection of equipment. This design shall coordinate selection of switchgear interrupting ratings, voltage ratios and impedances of main and auxiliary transformers, cable sizes and load equipment ratings to meet the following criteria.

- Switchgear and circuit interrupting devices at all voltage levels shall have adequate interrupting and close and latch capability for the calculated available three-phase and line-to-ground fault currents. Design shall be in accordance with ANSI C37 series standards.

- It shall be possible to start the largest motor on an otherwise fully loaded system without depressing any bus voltage to a level where running motors stall or where motors or driven equipment are at danger of risk of damage. Interaction between the different voltage level systems (4.16 kV and 480 volt) must be considered.

- Under normal* operating conditions, 4.16 kV system shall have a voltage spread of no more than 95% to 105% of nominal rating.

- Under normal* operating conditions, the low voltage systems shall have a voltage spread of no more than 92% to 106% of nominal rating.

*Normal is defined as all required station loads in service; no large motor starting.

2. 4160 Volt System

a. Base design for the skid-mount EGF shall include a host power feed into Skid I at 4160V which in the Power Option will feed the host from a generator operating at 4160V. Any other host or utility voltages will be treated on a site specific basis.

b. No motors or loads shall be served directly by the 4160V system.

3. Low Voltage System

a. The 480 volt motor control centers on the skids shall be fed from Skid I and be of the outdoor metal enclosed type for the control of 460 volt, 60 hz motors. Motor starters shall be combination full voltage magnetic type starter and fused switches. Motor starters shall have three overload devices, one per phase. Each motor control center shall contain as a minimum spaces to add one NEMA size 2 starter. Spaces shall be equipped with bus, mounting railings and all other accessories required to install a starter.

b. Motors 3/4 horsepower and up shall be supplied from the 480 volt, 3-phase, 3-wire system. Small loads, convenience receptacles, incandescent lighting and motors smaller than 3/4 horsepower shall be single phase and supplied from a 208/120 volt, 3-phase, 4-wire system supplied from a transformer located on each skid.

D. D.C.System

1. Lead acid batteries located in the control room/employee facility skid shall supply 125 volt D.C. power to operate the main circuit breakers in the 4160V switchgear and emergency lighting.

2. The D.C. system shall be located in a ventilated battery room on Skid N. The battery charging equipment shall be fed from

the UPS system. Batteries shall function only on loss of A.C. power.

E. Grounding

1. Grounding shall be provided to insure safety to personnel and equipment in case of electrical equipment failures and to prevent fires and damage from lightning and/or static electricity and shall be in accordance with IEEE Standard Publications No. 80 and 142. Resistance to ground shall not exceed 1 ohm.

2. All skid structures and/or electrical equipment ground buses shall be grounded through the plant's ground system (see SECTION 0059). Taps from the ground system to individual skids shall be a minimum #2/0 AWG insulated. Non-current carrying part of electrical equipment shall be grounded from the source by a separate wire to the equipment.

3. Cable tray shall be grounded at no more than 50 foot intervals by a continuous ground conductor running the length of the tray and connecting to a skid ground . The ground shall connect the ground wire to the ground system and to the incoming line end of the ground bus in each switchgear and/or MCC which the tray serves.

4. Conduit runs terminated at tray shall be connected to the tray ground with bare cooper conductor (No. 8 AWG min.). Grounding conductors in conduit shall be insulated and shall be terminated on the tray ground. Conduit shall not be considered a grounding conductor except for itself and for lighting fixtures.

5. Ground conductors on power circuits shall be connected to equipment grounds and to the source ground bus.

F. Lightning Protection

Lightning protection shall be provided in accordance with the requirements of NFPA No. 78.

G. UPS System

A reliable source of power to instruments and shutdown networks will be furnished as dictated by process control requirements. This power supply will be a static solid-state UPS (uninterruptible power supply) system mounted on Skid N.

H. Conductors

1. Multistrand insulated copper conductors shall be used throughout, except that multi-conductor control and instrumentation cable will be used where practical and economical. Minimum sizes shall be #12 AWG for power, #14 AWG for control and #16 AWG for instrumentation.

2. Insulation

   a. 4160 volt system - 5 kV EPP, shielded with 133% insulation level and PVC jacket.

   b. Low voltage (600 volt and below) systems for power - 600 volt, Type XHHW.

   c. Low voltage systems for lighting - 600 volt, Type THHN.

   d. Control systems - 600 volt, Type THHN.

   e. Instrumentation systems - Shielded with EPR or XLPE insulation with Hypalon jacket.

3. Equipment Ground - Insulated (green) grounding conductors will be run with circuit conductors of 4160 volt system and low voltage power and lighting systems.

4. System Segregation and Separation

   a. Conductors of different voltage systems will be run in separate raceways.

   b. Lighting wiring will be run in raceways separate from low voltage power and control.

   c. Control wiring will be run in raceways separate from low voltage power except that control wire for local pushbutton stations at motors can be run in the same raceway as motor power conductors for motors 30 horsepower and smaller.

   d. All instrumentation and noise susceptible control circuits will be run in raceways separate from power and control. A 3-inch minimum separation will be maintained between instrumentation and power raceways.

I. Motors

1. Motors 3/4 horsepower to 250 horsepower inclusive shall be three-phase, 460 volts, squirrel cage, induction type, supplied from the 480V MCC's.

2. Service factor for all motors shall be 1.15.

3. Motors shall be designed and constructed in accordance with ANSI/NEMA MG1.

4. All motors shall be suitable for full voltage (across-the-line) starting. Torque and current characteristics shall be in accordance with NEMA design "B" unless drive requirements dictate higher values.

5. Motor enclosures shall be suitable for the environment in which they are to operate. It shall be the Contractor's responsibility to determine the location classification and motor enclosure required. All totally enclosed motors shall have at least one threaded drain hole and plug for removal of condensate. Motors for use in hazardous locations shall be totally enclosed, fan-cooled or pipe ventilated, and approved for the locations.

5.05 Instrumentation and Controls

A. General

1. A modular, microprocessor based, Central Control System (CCS) shall be provided for data handling, system control, monitoring, recording, journalizing, and alarming necessary for plant operations. The control system shall be located on Skid N, and shall provide a seamless interface to all plant processes independent of which Vendor or Subcontractor provides the process hardware. The CCS shall be the primary operator to plant interface.

2. Control strategies that need to be defined by various Vendors, Subcontractors, or other suppliers of process equipment shall submit those strategies as functional drawings, logic drawings or ladder diagrams of sufficient detail to allow the CCS vendor or the design engineer to implement these strategies in the control system hardware.

3. The Control System shall control all analog and digital loops. Contractor shall minimize use of local controls or programmable controllers.

4. The Control System shall be used for system sequential control and interlocking except as prohibited by an explicit code.

5. All plant parameters in the system shall be monitored, indicated and historized and made available on the control room CRT's via the Control System.

6. If a locally controlled system is required, a serial digital communication interface (RS 232/422) shall be provided to the Control System. This interface shall provide all pertinent information relative to the locally controlled system. One status contact or alarm is not acceptable.

7. Local indicating devices (pressure gauges, thermometers, etc.) shall be furnished for local monitoring only if data are not available. Use of local indication is to be minimized. The use of test taps and test wells is encouraged.

8. Control signals for each skid shall terminate in a single junction box which shall be wired via a data highway directly to the Control System I/O on the Control Skid. Instrumentation shall be premounted and prewired to each skid junction box prior to delivery of the skid to the site. Field wiring shall be minimized.

B. Hardware

1. Field equipment shall be common manufacturer to the maximum extent. Final drive elements and control valves shall be of one manufacturer. Local indication when used, such as gauges, thermometers, pressure switches and level switches shall be one manufacturer. Power transducers, pressure transmitters, thermocouples, Resistance Temperature Detectors (RTD's) shall be of one manufacturer.

2. Electronic signals shall be 4-20 milliamps or 1-0-1 milliamps. Smart transmitters shall be used where the probable installed accuracy improvement is justified. Digital communication of transmitters with the CCS is allowed. However, transmitters may not be bused onto a single digital communication pair.

3. Pneumatic signals shall be 3-15 psi. The use of current to pneumatic signal transducers is discouraged. When pneumatic final drive components are used, current to pneumatic positioners that are drive-mounted are encouraged as signal conversion devices.

4. Skid communications junction boxes shall be NEMA weatherproof enclosures with 20% spare terminals.

5.06 Spare Parts and Special Tools

A. General Spare Parts

The Contractor's procurement specifications shall request the bidders to provide a recommended spare parts list and price sheet with their bid on the equipment. This information shall be provided to the Owner at the time an equipment purchase order is issued. The Owner shall purchase spare parts from the Contractor's equipment supplier. Owner shall receive and place into storage all spare parts received.

B. Special Tools

The Contractor's procurement specifications shall require equipment suppliers to provide any special tools, equipment or lifting devices required to install, test, clean or maintain the equipment. These items shall be supplied by the Contractor and be turned over to the Owner upon delivery of the skids. Special tools shall be in good working order.

6.00 SKIDS A AND B - FUEL RECEIVING AND STORAGE

6.01 General

A. Two types of equipment will be required for the fuel receiving/storage system:

- Receiving Skid -A
- Storage Facility

Site conditions will determine the type and quantity of RDF fuel skids for each application. The Contractor may propose alternative systems if cost or reliability advantages exist.

B. Additionally, a network of conveyors will be required to bring fuel to and from storage. The conveyors shall be field-erected; however, Contractor shall supply a storage system which is highly adaptable to a number of different storage configurations with a minimum of modification.

C. Equipment and conveyors shall be controlled automatically from the CCS. Local emergency stop switches shall be provided to halt operation of the skid drive units in the event of a problem.

6.02 RDF Receiving Skid (Skid A)

A. Receiving skid shall consist of an enclosed truck dock with an opening for an apron-type conveyor in the bottom.

B. Skid shall be designed to accept fuel from a self-unloading trailer and direct the fuel to the apron conveyor. Skid design shall use chutes and diverters instead of any active fuel directing devices.

C. Truck dock section shall reasonably seal the truck/dock interface to prevent release of odors and RDF. A roll-up door shall be provided for closure between deliveries.

D. Truck dock shall be lighted.

E. Skid shall be designed to provide mounting for an apron conveyor. Pre-fabricated and reinforced conveyor penetrations shall be made in the walls prior to delivery to the site.

F. Skid shall be designed to mate with an adjoining skid such that, if desired, a single apron conveyor may be served with multiple trucks.

G. Contractor shall supply self-cleaning spike rolls, chain curtains, or other devices, as required, to prevent clumping of RDF in the transfer from the self-unloading trucks to the apron conveyor/chain drag conveyor system. Devices shall be mounted inside the truck dock and be fabricated prior to skid delivery. Devices may be electrically or hydraulically powered at Contractor's option.

6.03 RDF Storage

A. The storage facility shall be capable of storing 360 tons of the design fuel.

B. RDF storage shall be totally enclosed to prevent emissions.

C. Include a fire protection system including smoke detection alarms, and sprinklers. Fuel storage fire protection system shall receive water from the host's fire protection system.

D. Include interface equipment and controls to evenly transfer the RDF to the apron conveyor (Skid C) upon demand. Hydraulic or electrically metering rolls shall be included if required.

6.04 Hydraulic Power Unit (Skid B-1)

A. Two 100% capacity hydraulic oil pumps shall be provided on an independent skid. Pumps shall be of sufficient capacity to power four walking floor trailers, taking equipment and piping pressure drop into consideration. Pumps shall have a 10% head margin and a 5% flow margin.

B. A 60 mm filter with bypass shall be provided to remove particulate matter from the hydraulic fluid.

C. A fluid reservoir, complete with gauge glass, low level switch, and electric fluid heater, if required, shall be provided. Reservoir capacity shall be twice that required by nine walking floor conveyors. Reservoir may be built into the skid support beams under the pumps.

D. Provision shall be made for manual makeup into the fluid reservoir using 55 gallon drums and a drum pump. The skid shall provide a spill sump for this purpose.

E. If Skid C or other equipment is to be powered hydraulically, additional capacity in filter, pump and reservoir shall be required.

7.00 SKID C - FUEL METERING TO BOILER

7.01 General

A. System shall consist of a fuel metering bin with level indication, and a single conveyor feeding the boiler. Two Skids shall feed the single boiler from one or two conveyors.

B. General design of this skid shall be flexible allowing for additional fuel input streams from fuel storage. The basic design of this skid shall allow for left and right-hand applications.

7.02 Fuel Metering Bin

A. Bin shall be totally enclosed except at inlets from apron conveyors skids and outlet to boiler. These connections points shall tie into the adjacent skids to form a totally enclosed system.

B. Level switches at high, low, and low low levels shall be provided and shall input to the CCS. Sufficient redundancy shall be designed into the system to prevent "blinding" by RDF debris.

7.03 Fuel Feed Conveyor

A. Conveyor and any metering rolls or other equipment may be powered by either a hydraulic or electric motor, at Contractor's

option. Conveyor shall use steep inclination or other means to control the rate of fuel fed into the furnace.

B. Conveyor drive shall be speed controlled by the boiler combustion control system via the CCS.

8.00 SKID D-1 - FORCED DRAFT FAN SKID

8.01 General

A. Contractor may provide an independent skid for the boiler including a forced draft fan, primary air fan (if required), and motors for the fans.

B. As an alternative, the fan(s) may be mounted to the combustor/boiler skid(s).

8.02 Design Criteria

The forced draft and primary air fans shall be designed for the full combustion air requirements including air leakage under the following operating conditions:

		FD	PAF
1.	Flow	100% MCR	Per Boiler Mfr.
2.	Excess Air	50% (min.)	50% (min.)
3.	Air Leakage	3%	3%
4.	Inlet Air Temp. Range	50° - 100°F	Per Boiler Mfr.
5.	Maximum Fan Speed	1200 RPM	1800 RPM

The fans provided shall be specified with the following test block margins above net requirements. Net requirements are defined as volume, temperature and pressure requirements at MCR, when burning the design fuel.

Volume	-	115%
Static Head	-	132%
Temperature	-	125°F

Motor driver shall be sized for test block conditions with 80°F inlet air temperature.

8.03 Combustion air shall be drawn from the RDF storage area and the atmosphere. All combustion air need not be taken from the RDF storage area. See SECTION 0059 for combustion air stream at the application site.

8.04 Motor cooling water, if required shall be taken from a cooling water line, either from the cooling towers or supplied by the host.

9.00 SKID D-2 - REAGENT STORAGE

9.01 General

Include silos for dry storage of sand and limestone for use in the boiler systems. A dense phase transport system shall be provided to convey the solids to the boiler surge hoppers. An aqueous ammonia tank with pump and vent sump shall also be included.

9.02 Dry Reagent System

A. Silos shall be sized for seven days of consumption by the boiler operating continuously at rated output or one and one-half truckloads of the reagent, whichever is greater.

B. Field erection of silos will be permitted if skid mounting is impractical. If silos require field erection, Contractor shall minimize field assembly by providing prefabricated structural steel and piping as required.

C. System shall include a dense phase transport system for each dry item and an unloading system to accept pneumatically conveyed solids from a delivery truck.

D. A vent with filtration for dust collection shall be provided on each silo. The filter shall be self-cleaning and be provided with a differential pressure switch.

E. Control system shall be connected to the CCS and shall provide for monitoring of reagent inventories.

9.03 Aqueous Ammonia System

A. Aqueous ammonia shall have an approximate ammonia concentration of 25%.

B. System shall include storage tank reagent unloading and transfer facilities, transfer pumps, piping, and vent sump.

C. Containment for 1.1 times the tank capacity shall be provided in the event of a spill.

D. Tank capacity shall be sized for seven days of consumption by the boiler operating continuously at rated output or 2500 gallon minimum.

E. Two 100% capacity pumps shall be provided.

F. Control system shall monitor tank inventory, allow for remote start of reagent pumps and a system trouble alarm to the CCS.

9.04 Reagent Properties

A. Sand quality shall be:

- Silica sand with over 75% silica content.

- Size distribution

Average	-	0.8-1.0 mm
Minimum	-	<5% less than 0.25 mm
Maximum	-	<10% larger than 2.0 mm

- Agglomeration Temperature - 2200°F (min.)

B. Limestone quality shall be young amorphous with Ca CO_3 content of over 90% by weight.

C. Hydrated lime shall be dry pulverized type.

10.00 SKIDS E AND F - COMBUSTOR/STEAM GENERATOR

10.01 The boiler shall consist of one balanced draft combustor and steam generator. The unit shall be designed to combust 125 x 10^6 Btu/hr of RDF fuel. Superheater outlet conditions shall be 640 psig, 754°F.

10.02 The combustor shall be of the bubbling fluidized bed type, of modular construction, designed to minimize field erection work. The combustor shall be capable of burning the design fuel as specified in this SECTION.

10.03 The boiler superheater shall be an integral, two-stage convective type. The superheater outlet temperature control shall be by attemperation between superheater sections. A complete automatic attemperating water spray control system shall be provided.

10.04 A complete digital solid state flame safety system shall be furnished for main fuel and auxiliary firing of propane in the combustor for start-up. System shall supervise and control transient and steady state operation of the combustor in order to prevent a catastrophic accident. Flame safety system shall provide for operator control of the boiler from the control room.

10.05 Sootblowers shall be provided for maintaining boiler performance. Superheater and convective sections shall be provided with sootblowers. Sootblowers shall be motor-driven and shall be automatically and sequentially operated from the control room. Steam supplied from the low temperature superheater shall be used as the cleaning medium. Soot

blower system shall include all necessary controls, piping, valves and drains necessary for a complete system.

10.06 Environmental Commitments

A. Owner's air permit commitments are listed in SECTION 0081. Boiler shall meet these commitments burning the range of design fuels from full load to 75% load.

B. Firing Limitations

Fuel	Annual Usage	Burner Max.	Firing Rate/Boiler
RDF	47,000 TPY	By Vendor	125×10^6 Btu/hr
Propane		By Vendor	30×10^6 Btu/hr (or less)

C. Criteria Emission Limitations

Maximum value of criteria pollutants emitted from the boiler to the atmosphere via stack shall not exceed the values listed in SECTION 0081.

D. Flue Gas Temperature

The temperature of flue gas ahead of the baghouse shall not exceed 300°F.

E. Trace Toxic Emissions

The boiler and flue gas system shall be designed to limit the total trace toxic emissions from the stack to the following values:

Pollutant	Rate of Emission lb/hr
NH3	2.4
As and Compounds	6.28×10^{-4}
Benzene	1.18×10^{-3}
Be and Compounds	5.88×10^{-4}
Cd	1.42×10^{-4}
Carbon Disulfide	0.28
Cr, Total	4.52×10^{-2}
Formaldehyde	1.24×10^{-1}
HC1	4.76

Pollutant	Rate of Emission lb/hr
HF	0.26
Mg	0.14
Hg(aryl and inorganic compounds)	3.44×10^{-2}
Hg Vapor	6.88×10^{-3}
Vinyl Chloride	2.36×10^{-3}
Ni	3.24×10^{-2}
Tetrachlorodibenzo P-dioxin	2.36×10^{-6}
Hexachlorodibenzo P-dioxin	1.37×10^{-7}

10.07 Fuels

A. Main Fuel - Refuse Derived Fuel, 100% Heat Input
- 50/50 Mix of RDF and Organic Stream, 100% Heat Input

B. Ignition and Warm-up - Propane, 25% Heat Input

10.08 Performance Fuel

The fuel analysis to be used to determine the combustor and steam generator performance guarantee is defined in SECTION 0081.

10.09 Design Fuel

The steam generator and its support systems shall be designed to fire fuel with the characteristics of the design fuel specified in this SECTION 0058. The design fuel shall have the same ultimate analysis (dry basis) as the performance fuel except that its moisture content (wet basis) shall range from 20 to 35%.

10.10 Steam Purity

The purity of steam leaving the superheater shall not exceed:

Total Dissolved Solids, TDS	50 ppb
Sodium, Na	20 ppb
Silica, SiO_2	20 ppb
Cation Conductivity	0.2 µmho/cm

with a boiler water solids content at any level up to and including the limits recommended by the American Boiler Manufacturers Association

for the appropriate pressure condition. This criteria shall be met at any operating load.

10.11 Temperature Control

The superheater attemperating water spray control system shall be designed to maintain the design steam temperature at all boiler loads down to 80% of the boiler's maximum continuous rating. The outlet temperature below 80% steam flow shall be allowed to drop in accordance with the boiler manufacturer's normal design. Temperature control range shall not be dependent on fuel moisture content.

10.12 Blowdown/Blowoff

A. The steam generator shall be designed for continuous blowdown rates from 0-10%. Performance guarantee shall be based upon a continuous blowdown of 0%. Continuous blowdown water shall be piped to Skid L-1 for separation.

B. An intermittent blowoff tank shall be included on the boiler skid. Tank shall operate at atmospheric pressure and send water to the sewer system and vent steam to the atmosphere.

10.13 Water Chemistry

A. Boiler water chemical treatment shall consist of an oxygen scavenger injected into the boiler feedwater after the deaerator and a boiler water treatment program as recommended by the boiler manufacturer.

B. Concentration of solids in the boiler drum shall be controlled by continuous blowdown.

C. Water for superheater attemperating spray shall be deaerated, demineralized water from the boiler feedwater line. As an alternative to the aforementioned, the boiler manufacturer may provide a drum steam condenser and, if necessary, attemperating water injection pumps as a complete desuperheating water system.

10.14 Turndown

Fuel burning system shall be capable of providing stable combustion under automatic control with all feeders in service from full capacity to 50% of full boiler output when firing either the design or performance fuels.

10.15 Furnace Design

A. Combustor and steam generator shall be designed to withstand transients of ± 35 in. w.g.

B. The combustor/furnace shall be maintained at a negative draft for all loading conditions.

10.16 Boiler Cleaning

The steam generator internal wetted surfaces shall be cleaned prior to operation by chemical cleaning as recommended by the manufacturer and a steam blow to the steam turbine stop valve.

10.17 Forced Draft and Primary Air

The boiler shall either accept a flanged duct from fans on Skid D1 or include the fans with the boiler. Fans shall meet the criteria specified in Paragraph 9.00

10.18 All piping and tubing and their respective support systems shall be designed in accordance with ANSI B31.1, Power Piping Code and ASME Boiler and Pressure Vessel Code, Section I.

10.19 Flame Safety System

The flame safety system for the auxiliary burners shall be in accordance with NFPA Standards. The system shall provide for control of the unit from the control room.

10.20 NOx Reduction System

The steam generator shall be provided with an ammonia based selective non-catalytic NOx reduction system. The design of the system is to meet the following requirements:

A. Anhydrous ammonia shall not be used as the system's reagent. Aqueous ammonia (~ 25% solution) shall be the reagent.

B. Content of reagent in the flue gas measured at the location of the CEM equipment shall not exceed guarantee as described in this SECTION 0058.

10.21 Safety Valves

A. The steam generator shall be provided with all safety valves as required by the ASME Boiler Code.

B. In addition to code valves, the superheater outlet shall be equipped with a control valve type of "relief valve" to permit relief of steam pressure from the control room. The non-code relief valve shall be provided with double manual isolation and bleed valves to permit removal and repair of the non-code relief valve while the steam generator is in operation.

C. The non-code relief valve vent shall be connected to a silencer which shall keep noise emissions to statutory limits.

10.22 Sand Bed and Limestone System

A. Boiler shall accept sand and limestone from the storage silos via a mechanical or pneumatic conveyor system.

B. Day bins, if required, shall be sized by the boiler manufacturer.

10.23 Feedwater System

A. A three-element control system shall be provided to control feedwater flow to the boiler.

B. Feedwater control valve shall be located at the boiler.

C. Include an ASME flow nozzle for feedwater flow measurement.

10.24 Flyash Handling

The outlet of the boiler ash hopper(s) shall be located at the low point of the vertical flue gas paths. Mechanical screw conveyors shall be provided to collect the flyash from the boiler ash hopper(s) and convey the ash to the adjacent Skid G system.

10.25 Bottom Ash Handling

Residue bed material (bottom ash) removal from the bubbling fluidized bed combustor shall be accomplished using an automatically operated bed classifier and drain system. Classifier shall be capable of reducing sand content in the bottom ash to no more than 10% by weight. Bottom ash shall be cooled, if necessary, and conveyed to a residue container (Skid O-1).

11.00 SKID G - AIR POLLUTION CONTROL SYSTEM

11.01 General

This equipment shall connect via ductwork to the boiler/combustor at its inlet and the induced draft fan at its outlet. Package shall consist of a

mechanical dust collector, reagent injection system, and fabric filter baghouse with dampered bypass.

Emissions Requirements

Emission limits are given in SECTION 0081.

11.02 Mechanical Dust Collector

The mechanical dust collector shall be located immediately downstream of the boiler and provide removal of particulate from the gas stream to reduce particulate loading on the bag house. The unit efficiency shall be at least 45% with the boiler operating at MCR. Contractor may provide a single unit, or two 50% capacity units operating in parallel.

11.03 Baghouse

A. A baghouse shall be provided to further enhance flue gas particulate removal to meet air quality permit requirements. The unit shall be a modular, pulse jet type self-cleaning filter or equivalent design with housing of carbon steel construction designed for ± 35" W.C. Each module shall include a clean air plenum with access features to facilitate inspection and bag removal. The lower section of each module shall be fitted with an ash hopper. The fly ash hopper shall include an access hatch to allow internal inspection and maintenance of the "dirty side" of the module.

B. A by-pass duct, with pneumatically operated damper or poppet valve, shall be provided between the baghouse "dirty gas" inlet manifold and the "clean gas" outlet manifold. This arrangement will permit the baghouse to be bypassed during start-up when the gas temperatures are below the dew point.

C. Capture of sulfur, chlorine and mercury emissions shall be enhanced through the use of a filter bag pre-coat system. The system shall inject dry pulverized hydrated lime and activated carbon into the flue gas stream upstream of the baghouse from metering bins. Hydrated lime shall be fed to a metering bin, if required.

11.04 Ductwork

A. Ductwork shall be arranged to be self-cleaning as much as possible with a maximum gas velocity of 4000 fpm at net flow conditions. Areas with potential buildup of ash shall be provided with hoppers and be tied to the ash collection system. Hoppers shall be provided with two rod-out ports at each ash system entry point. Hopper access doors shall be padlocked.

B. Ducts shall be insulated and be designed for outdoor service with an internal pressure of + 35" W.C. Expansion joints shall be provided to avoid distortion of equipment due to thermal growth.

C. Ducts shall be provided with access ports and ladders.

D. Expansion joints shall be of fabric and be provided with baffles to protect the fabric from flue gas erosion.

E. Damper control shall be provided and shall be electric (motor) or pneumatic using instrument quality air.

F. Ductwork support system shall include spring supports consistent with good engineering practice.

G. Instrumentation shall be provided in the ductwork to measure and record pressure drop across each piece of dust collecting equipment.

12.00 SKID H - INDUCED DRAFT FAN AND STACK

12.01 Induced Draft Fan

A. An induced draft fan located downstream of the baghouse shall be provided for the boiler complying with the following design criteria:

Net Flow Conditions

- Boiler Operating at MCR
- Design Fuel
- Design Excess Air
- Design Inlet Gas Temperature

Test Block Conditions

- Net Flow x 1.20
- Net Static Head x 1.44
- Net Inlet Temperature + 25°F
- Maximum Speed 1200 RPM

B. Fan drive shall be rated for test block conditions and shall be constant speed. Two speed fan drives are acceptable.

12.02 Continuous Emissions Monitoring Equipment

A. Continuous Emissions Monitoring shall be provided to monitor the emissions from the boiler.

B. Continuous Emissions Monitoring (CEM) and recording equipment shall be provided for the following parameters:

- Nitrogen Oxides, expressed as NO_2
- Carbon Monoxide, CO
- Opacity
- Oxygen, O_2
- Sulfur Dioxide, SO_2
- Carbon Dioxide, CO_2

C. All CEM equipment shall meet U.S. EPA performance specifications and be EPA certified.

D. The plant's continuous monitoring equipment (CEM) shall be located at the base of the stack. Probes shall be located at the platform level.

E. Sufficient access shall be provided for maintenance to all CEM equipment. CEM analysis shall be located in a heated/air conditioned enclosure with a minimum of two 110V, 20A outlets.

12.03 Stack

A. The stack shall be ground-mounted, free-standing design with insulated internal flue. Stack shall be provided with lighting and markings to satisfy local and FAA code requirements. Stack shall be of steel design and constructed in accordance with ASME/ANSI specification STS-1. Flues shall be of a material which experience has shown is suitable for service.

B. Flue diameter shall be set to achieve 48 ft/sec exit gas velocity at boiler MCR conditions.

C. The stack shall be provided with a 360°access platform, handrails and toe plates, ladders to provide access to test ports and gas sampling stations. The foregoing shall adequately allow for maintenance and compliance testing. A davit capable of supporting 500 lb shall be provided to lift test equipment to the test platform. Provide a minimum of two 110V, 20A electrical circuits at the platform.

D. Lightning protection shall be in accordance with NFPA 78.

E. Stack shall be supplied in flanged sections, allowing for additional sections to be bolted onto the stack as individual applications require. Three sections shall require special design and will constitute the base offering.

1. Base Section - shall be about 40 feet long and have a ductwork inlet for flue gas from the induced draft fan, as well as support steel to attach it to the base skid.

2. Platform Section - shall mount on the base section and be about 40 feet long. It shall include a 360° platform, as well as ports for emissions monitoring and other requirements as outlined above.

3. Height Section - shall mount on the platform section to provide the site specific height required. The base offering shall not include a height section.

4. Cap Section - shall mount on the platform or height section and be about 25 feet long. This section shall include a chimney nozzle and FAA required lighting.

F. Sections shall be constructed to support a total stack height of 200 feet. Guy wires to prevent undue wind loads shall be avoided where possible.

G. Each section shall provide for ladder and conduit as appropriate and allow for field fit-up at the flange points.

12.04 Ductwork

A. Ducts shall be insulated and be designed for outdoor service with an internal pressure of + 36" W.C. Expansion joints shall be provided to avoid distortion of equipment due to thermal growth.

B. Ducts shall be provided with access ports and ladders.

C. Expansion joints shall be of fabric and be provided with baffles to protect the fabric from flue gas erosion.

D. Damper control shall be provided and shall be electric (motor) or pneumatic using instrument quality air.

E. Ductwork support system shall include spring supports consistent with good engineering practice.

F. Instrumentation shall be provided in the ductwork to measure pressure drop across each piece of dust collecting equipment.

13.00 SKID I - SWITCHGEAR AND STATION SERVICE TRANSFORMER

13.01 General

For the power option, this skid shall include protective relaying to isolate the generator from the electrical distribution system. Included on this skid for either option will be transformers for station service demand. Base skid design shall be as follows:

13.02 Generator will produce approximately 8.4 MW at 4.16 kV , 3 phase electricity. Electricity will be distributed to external loads at 4.16 kV. Step-down transformers shall provide 480V and 208V power for internal electrical demand. 480V switchgear shall supply each skid or group of skids. When the turbine is not in service, power shall be backfed through the 4.16 kV distribution system.

13.03 A 120V system shall be supplied from the 480V system via a transformer for lighting and portable tool operation.

13.04 Equipment

A. 4160V Switchgear

The 4160 volt switchgear shall consist of a grouped outdoor lineup of circuit breakers. Circuit breakers shall be power vacuum breakers, draw-out type, electrically operated with D.C. close and trip. All components shall be front accessible, facilitating routine inspection and parts replacement. Bus bars shall be copper.

B. 480V Transformer

A single 4.16 kV - 480V delta-wye outdoor transformer shall supply the 480V system. The transformer shall be equipped with oil level gauge, pressure vacuum gauge, dial-type thermostat and alarm contacts. Alarms shall be connected to the CCS.

C. 480V Switchgear

The 480 volt switchgear shall be metal enclosed type, rated 480/277 volts, 3 phase, 4 wire, 60 hz with copper bus. The main and feeder circuit breakers shall be draw-out type, with stored energy closing mechanisms, and solid state tripping. Provide a minimum of two additional circuit breakers as spares.

D. Protective Relays

1. Contractor shall provide a fully integrated relay scheme for the auxiliary power distribution equipment. The relaying scheme shall cause a rapid and coordinated response to electrical and

mechanical faults so as to minimize equipment damage while maintaining continuity of service of unaffected systems. Safety of personnel and of the general public, whenever involved, shall be considered of paramount importance in the design.

2. Contractor shall retain responsibility for final design of a scheme in accordance with recognized standards of good engineering practice for utility systems.

3. All protective relays shall be utility grade, semi-flush mounted on panel fronts with draw-out cases and suitable test switches. In general, protective relays should be provided with targets to facilitate trouble shooting. Auxiliary relays shall have dust covers and in general be mounted in panel interiors.

E. Area lighting shall be fed from a 120V panel board located on Skid I. The panelboard shall be fed independently from feeds to other skids.

F. Tie line to the host shall include metering as described above.

14.00 SKID J - STEAM TURBINE GENERATOR

14.01 Components

A. The turbine generator package shall consist of the following as a minimum; turbine generator, stop valve, throttle valves, lube oil system, air-cooled generator, speed reducer, excitation system, gland seal system, electrohydraulic control system, extraction non-return valves for extraction point, turning gear (if required), exhaust hood diaphragm and exhaust hood spray system for low load operation.

B. The turbine generator shall be capable of operation at constant speed operating independently or in parallel with the utility electric grid.

14.02 Skid J-1, Steam Turbine

A. General Design Criteria

1. The steam turbine shall have throttle conditions of 600 psig, 750°F. An uncontrolled extraction at 15 psig shall be provided.

2. An integral lubrication and hydraulic control system shall be provided with the turbine and will include a lube oil reservoir, lube oil coolers, and two lube oil pumps--one operated from the turbine shaft, the other operated from an A.C. motor.

3. The turbine generator shall be a condensing-type unit with a design exhaust pressure of 3.0 HgA.

4. The turbine shall be designed to accept the maximum rated output of the 125 x 10^6 Btu/hr boiler plus a 5% design flow margin. The exhaust hood of the turbine and inlet to the condenser shall be designed to accept a backpressure of 2.5" HgA at full flow.

5. The turbine inlet steam chest shall be designed for maximum boiler pressure corresponding to the boiler safety valve set pressure plus accumulations.

6. Steam purity delivered to the turbine shall be limited to 50 ppb of dissolved solids with silica levels not exceeding 10 ppb.

7. The turbine will be of the horizontal shaft, multi-stage type.

8. Turbine shall be arranged for an axial or side discharge exhaust with the uncontrolled extraction also exiting the top of the turbine.

9. The turbine shall be capable of operating without damage at an inlet pressure and temperature in excess of design maximum inlet steam pressure and temperature in accordance with NEMA standards.

10. All parts which are subject to temperature changes shall be designed and supported so as to permit free expansion and contraction in order to minimize distortion or misalignment.

11. The casing shall be horizontally split and supported at the centerline, with flexible supports at the high pressure end.

12. Provisions shall be made in the design of the turbine to control thermal stresses in the turbine casing.

13. The main horizontal joint shall be steam tight. There shall be no vertical joints with pressures in excess of 100 psig.

14. Provisions shall be made in all bolting 2 inches in diameter and larger for tightening by hydraulic methods.

15. The bearings shall be arranged to permit inspection without removal of the turbine casing.

16. The rotor shall be of forged construction, with wheels keyed to the shaft or forged integrally with shaft, as required by

design operating conditions. Dovetailed grooves shall be turned in the wheels to securely hold the individual blades.

17. The completed turbine rotor shall be balanced in the manufacturer's plant in order to run smoothly and without excessive vibration. The rotor shall also be operated at full speed in the turbine case, prior to shipment.

18. A grounding device shall be provided between the stationary and rotating parts of the turbine to prevent the flow of shaft currents between the rotor and the bearings.

19. The turbine blading shall be stainless steel and will be securely and adequately anchored and shall be readily renewable. Welding of blading to wheel disc will not be acceptable in any stage.

20. All diaphragm blading shall be of stainless steel.

21. Each diaphragm shall be split along the horizontal centerline and a doweled tongue and groove joint shall be provided to assure correct alignment and prevent interstage leakage.

22. The diaphragm halves shall be securely positioned in the casing.

B. Turbine Stop and Control Valves

1. The automatic governor controlled steam inlet throttle valves shall be venturi type.

2. The unit shall be equipped with a separate stop valve, which shall include provisions to actuate the main circuit breaker when the valve is closed. On-line testing shall be included to check the trip throttle valve stem movement while the turbine is running. Control solenoid for trip valve to have 125V D.C. coil.

3. Turbine control valves shall be controlled via a multi-valve bar lift system or Owner approved alternative.

4. Stop valve shall isolate the turbine from the boiler during start-up and to provide for emergency overspeed trip following loss of electrical load.

5. Vertical support for the stop valve shall be supplied, if required.

6. A removable corrosion-resistant integral strainer shall be furnished with the stop valve. A temporary fine mesh strainer shall be furnished for use during start-up.

7. All of the valves, valve stems, and valve seats shall be made of corrosion and erosion-resistant materials which have been proven suitable for successful operation and durability in similar applications.

8. Blow-down provisions for cleaning inlet piping shall be provided with the stop valve.

C. Shaft Sealing

1. The shaft packings shall be of the spring backed labyrinth type. They shall be supported so that their movement relative to the shaft shall be minimized.

2. A complete gland evacuation system with gland condenser and steam ejector shall be furnished. The system shall be designed for the complete condensation and removal of all surplus leak-off steam.

D. Turbine Governing System

1. A turbine speed control system shall be supplied, which shall automatically regulate the steam flow to the turbine through the governing system. The speed control system shall be furnished with speed/load control adjusting devices. It shall meet NEMA "D" requirements as a minimum.

2. In the event of an instantaneous change from full load (with maximum extraction) to no load, the speed governing system shall prevent any overspeed trip.

3. In addition to the turbine speed control system, a separate quick-acting emergency governor shall be furnished that shall cause steam flow to be shut off to the unit when it reaches approximately 10% overspeed, but can be reset when the speed is reduced to approximately normal. The emergency governor shall be of the type which can be tested at no load. One mechanical and one electric overspeed trip shall be provided.

E. Bearings

1. All bearings shall be designed for pressure lubrication and shall operate without injurious temperature or undue wear.

2. All bearings must be split to permit removal of the upper half for inspection and must be removable without removing the rotor.

3. All main bearings shall be provided with a positive visual check for oil flow through the bearings via sight flow indicators. Leakage of oil or oil vapors from the bearing housings shall be minimized.

4. A double acting tilting pad, multi-segment thrust bearing shall be provided to align and maintain the correct axial relationship between the rotating and the stationary parts.

F. Hydraulic and Lubrication System

1. A combined hydraulic and lubricating oil console, skid mounted, shall be furnished to provide hydraulic fluid to turbine control and emergency trip systems, and lubricating oil to the turbine and generator bearings.

2. The hydraulic and lubrication system shall include the following:

a. A full size oil reservoir with minimum three (3) minute retention time and level indicator to alarm at high and low levels. Provisions for draining and cleaning shall be provided. A reservoir heater shall be provided. Lube oil reservoir may be located within the main support beams of the turbine skid.

b. Twin oil coolers with transfer valve. Each cooler shall have 100% cooling capacity when supplied with 100°F cooling water, which shall have a pressure, not-to-exceed 150 psig. Cooler tubing shall be stainless steel, cupro nickel or Owner approved design.

c. Twin oil filters with transfer valve shall be provided. Filtration level shall be 10 microns.

d. A fully redundant lube oil pump system shall be provided. Two 100% pumps, one powered by an A.C. motor, the other powered either by the turbine shaft or a D.C. motor powered from the UPS system shall be provided with full tripping/transfer control.

e. Provide for remote tripping of lubrication pumps for fire emergency.

f. A suction strainer on each pump, a bearing pressure regulator, and low bearing pressure alarm and trip switches shall be provided.

g. Solenoid trip with low oil pressure trip to shut trip throttle and main steam valves when hydraulic pressure is low (and non-return valves when applicable).

h. Provisions for testing D.C. emergency pump via their associated pressure switches shall be provided with a D.C. pump.

i. Flanged stainless steel lube oil piping shall be provided between the filters and the turbine.

3. Instrumentation at the lube console shall be included for the following:

a. Temperature indication in and out of oil coolers.

b. Bearing oil pressure indication.

c. Control oil pressure indication.

d. Differential pressure switch for oil filter alarm.

4. The oil console shall be mounted to the turbine skid with a minimum of field piping and wiring required. All wiring connections, except for motors, shall be made at terminal strips in junction boxes.

G. Water Induction Prevention

1. ASME Standard No. TWDPS-1 entitled "Recommended Practices for the Prevention of Water Damage to Steam Turbines used for Electric Power Generation" and specific turbine-generator manufacturer's recommendations shall be followed to prevent water from entering the turbines.

2. All drain lines and drain valve ports shall have an inside diameter of not less than one inch to minimize risk of plugging by foreign material.

3. Power actuated valves shall be located in the main steam line drains, turbine drains, extraction line drains and exhaust line drains. Valves shall open automatically on a turbine trip and can be remotely operated from the control room. These power actuated valves are used for start-up, shutdown and non-load operation. Steam traps in parallel with the power actuated

valves in the steam line drains shall provide draining for steady state operation.

4. Drip pots shall be located at all low points of the main steam and extraction lines both before and after non-return valves. The drain lines from these drip pots shall slope continuously to their terminal points and shall run independently to the condenser.

5. Level sensing on the drip pots shall activate the power drain valves on high level. There shall be control room indication of drain valve position.

6. Steam seal lines between the turbine and gland steam condenser shall be pitched towards the condenser.

H. Turbine Overspeed Protection

1. An independent emergency overspeed trip device which acts at 10% overspeed closes the main turbine trip valve, shall be provided.

2. In accordance with turbine-generator manufacturer's requirements, the turbine must be protected against the possibility of the extraction point providing an energy source for the turbine. There will be two non-return valves in the extraction line feeding the deaerator. These valves shall be power assisted and close in the event of a turbine trip.

3. To guard against possible overspeed due to circumventing isolation valves via drain lines, the drains will be routed to the condenser.

I. Accessories

1. In addition to those accessories already mentioned above, the following shall be included:

   a. Two magnetic speed sensing pickups.

   b. Embedded 100 Ohm platinum RTD's for all main bearings and thrust bearing.

   c. All special maintenance tools including eyebolts, casing guide pins, jacking bolts, and other tools depending on special turbine construction.

   d. Borescope openings at selected critical stages.

e. If provided, the turning gear shall be A.C. motor-operated rotor turning gear with manual engagement lever, auto disengage, local start/stop/jog pushbuttons, zero speed sensor, permissive to start oil pressure switch and limit switch for engaged/disengaged position indication.

f. Vibration probes, cables, proximeters, and monitors mounted on the control panel (shaft sensing at turbine and generator bearings). The vibration monitoring system on the turbine shall include, at a minimum, two radial vibration probes on each journal opposed 90° and two axial probes on the turbine shaft.

g. Local turbine start-up panel with the following instruments:

(1) Inlet steam pressure gauge

(2) First stage pressure gauge

(3) Extraction temperature and pressure gauges

(4) Exhaust vacuum gauge

(5) Governor oil pressure gauge

(6) Bearing oil pressure gauge

(7) Electronic digital tachometer indicator

(8) Oil pump indicating lights (main, backup)

h. Lagging for high temperature parts of the turbine and heat retention insulating material.

14.03 Skid J-1 - Gear Set

A. Gears

1. Gear set shall be mounted on the turbine skid and reduce the turbine shaft speed for the generator shaft.

2. Gearing shall be of the opposed double helical type having teeth finished after cutting/hardening by the grinding, or shaving methods to a tooth finish of 20 RMS or better.

3. Gearing shall be an integral forging. Bull gear and shaft may be of two piece construction. Two piece construction shall

employ an interference fit sufficient for the transmission of all expected loads.

4. Gears and shafts shall be statically, and dynamically, balanced as rotating assemblies. Shaft bearing journals shall be ground, and concentric with the pitch line and shall conform to the maximum allowable runout tolerance for quality number 12, or better, gears per AGMA 390.03.

5. Pinion teeth shall be crowned and have necessary tip and roof relief to assure maximum tooth contact under full load.

B. Bearings

1. All bearings shall be designed for pressure lubrication and shall operate without injurious temperature rise or undue wear.

2. All bearings must be split to permit removal of the upper half for inspection and must be removable without removing the rotor.

3. All main bearings shall be provide with a positive visual check for oil flow through the bearings via sight flow indicators. Leakage of oil or oil vapors from the bearing housings shall be minimized.

4. A double acting tilting pad, multi-segment thrust bearing shall be provided to align and maintain the correct axial relationship between the rotating and the stationary parts.

C. Vibration/Temperature Indication

1. One axial vibration probe, at a minimum, shall be located on the gearset side of the coupling to the turbine and on the generator side.

2. A platinum RTD temperature probe shall be located on each bearing.

3. The indications from these instruments shall be integral with the turbine/generator measurements, and be accessible from the CCS.

D. Housing

1. Gear unit housing may be of either cast iron ASTM A48, Class 30 minimum or of fabricated steel construction, designed for high rigidity to maintain rotor alignment under extreme load conditions and to obtain adequate bearing support

stiffness. Housing shall be split on the horizontal center line of rotors with an oil tight, ground, metal to metal joint that prevents the escape of oil or vapors. Gaskets shall not be used; however, the use of soluble joint compounds is permitted.

2. Housing shall be stress-relieved or annealed before machining, and bores shall be machined to a degree of accuracy which will insure that a rotor which contacts correctly on true centers on a rotor checking stand will also contact correctly in its own housing.

3. Housing shall be designed with internal lube oil passages, when practicable, to minimize external piping. Removable inspection covers shall be provided for direct visual inspection of the full face width of pinion gear.

4. Shaft seals shall be of the non-rubbing labyrinth type and made of a non-sparking material which will cause minimum scoring of the shaft in the event of accidental rubbing.

E. Lubrication

The gear unit shall be pressure lubricated and include spray nozzles for the teeth.

F. Couplings

Couplings shall be of the flexible gear type.

14.04 Skid J-2 - Generator

A. General Design Criteria

1. The generator shall be an alternating current, synchronous generator, rated in accordance with the requirements below. Generator shall be provided with an independent skid with provision for alignment and connection to the turbine skid.

2. The generator shall be a four-pole, synchronous, 1800 rpm, air cooled type. The generator shall include necessary grounding, instrument transformers, surge protection, and excitation equipment. The generator lube oil system shall be integrated with the turbine system.

3. The generator shall be of the salient pole revolving field type.

4. The telephone influence factors of the generator shall be in accordance with the latest ANSI standards.

5. The deviation factor of the open circuit terminal voltage wave of the generator shall not exceed 10% as defined by ANSI standards.

6. The generator armature shall be capable of operating at 130% of rated armature current for at least one minute, starting from stabilized temperatures at rated conditions.

7. The generator field windings shall be capable of operating at a field voltage of 125% of rated load field voltage for at least one minute starting from stabilized temperatures at rated conditions.

8. The generator shall be capable of withstanding without mechanical injury, any type of short circuit at its terminals for times not exceeding the short time thermal capabilities, when operating at rated kVA and power factor and 5% over voltage, provided the maximum phase current is limited by external means to a value which does not exceed the maximum phase current obtained from the three-phase fault. In the case of stator windings, the criterion for no injury is that the windings shall satisfactorily withstand a normal maintenance high-potential test. There shall also be no visible abnormal deformation or damage to the winding coils and connections resulting from the test.

9. The generator shall be suitable for operation at rated kVA, power factor, and frequency at any voltage not more than 5% above or below rated voltage, but not necessarily in accordance with the standards of performance established for operation at normal rating.

10. The generator shall be capable of operating continuously at full rated load under usual service conditions (altitude not above 3300 ft, as per ANSI standards). The total temperatures as determined by any of the methods given in ANSI standards shall not exceed 130°C for the field when operating at full load or below. The stator and rotor insulation shall be Class F.

B. Stator

1. The stator coils shall be insulated to eliminate any voids so as to form a long lasting and durable insulation.

2. Insulation of stator core laminations shall be non-aging and of a type which will maintain its insulating properties at high temperatures.

3. Leads from both ends of all phase windings shall be brought out to an accessible location.

C. Rotor

1. The generator rotor shall be machined from a solid forging.

2. Suitable fans shall be provided on the rotor to circulate the air used as a cooling medium in the generator.

D. Bearings

1. All bearings must be split to permit removal of the upper half for inspection.

2. All bearings will be provided with a positive visual check point on oil flow through the bearings.

3. Bearings shall be insulated where necessary to prevent the flow of "shaft current."

E. Accessories

1. In addition to those accessories already mentioned in the specifications above, the following shall be included:

a. A 100 ohm platinum bearing temperature detector shall be inserted in the lower half of each bearing, to monitor bearing temperatures and actuate alarms or shut downs.

b. Platinum resistance type temperature detectors, embedded in the stator windings shall be provided.

c. Platinum resistance type temperature detectors in the generator air paths shall be provided.

d. High voltage terminal box with:

(1) Three (3) CT's on outgoing lines (one on each phase) for generator differential.

(2) Supply of all necessary CT's and PT's for voltage regulator as per manufacturer's recommendations.

(3) Three (3) lighting arrestors and surge capacitors on the incoming lines. Outgoing lines shall be connected into a neutral bus bar.

(4) A transformer shall be wired and installed inside the terminal box with secondaries of transformers brought to terminal strips in a junction box.

F. Brushless Excitation System

1. The generator shall include a direct connect brushless exciter overhung on an extension of the generator shaft complete with a rotating fused diode assembly, including a lead assembly that connects the D.C. output to the field windings of the main generator.

2. A full wave 3-phase diode bridge assembly shall be used to rectify the exciter armature output. Parallel fully rated diodes shall be used to provide 100% redundancy.

3. A permanent magnet pilot exciter shall be furnished to provide a power source for the voltage regulator and eliminate the need for field flashing and voltage regulation power transformer.

4. A plate-mounted dual automatic voltage regulator shall be provided.

G. Generator Ratings

1.	Rated kW Output	-	Per Manufacturer
2.	Rated kVA	-	Per Manufacturer
3.	Power Factor	-	0.85
4.	Number Poles	-	4
5.	Phases	-	3
6.	Hertz	-	60
7.	Voltage	-	4160V
8.	Insulation Class	-	F
9.	Rotor Temperature Rise (°C) (By Resistance)	-	105
10.	Stator Coils Temperature Rise (°C) (By Detector)	-	90
11.	Excitation Type	-	Brushless

12. Voltage Regulator Type - Static

13. Cooling Medium - Air

H. Generator Control and Protection Panel

1. Provide one generator control and protection panel with protection relays, metering and controls as indicated below.

2. Generator Protective Relays

Device 51V	-	Voltage Controlled Overcurrent Relay
Device 87-G	-	Generator Differential
Device 32	-	Generator Reverse Power
Device 40	-	Loss of Field
Device 46	-	Negative Sequence Overcurrent Relay
Device 86-G	-	Lockout Relay
Device 64-G	-	Generator Field Ground Fault
Device 27-59	-	Generator Under/Over Voltage Relay
Device 25	-	Synchronous Check Relay
Device 81 O/U	-	Over/Under Frequency Relay
Device 49G	-	Generator Over Temperature Relay
Device 59G	-	Generator Ground Fault

All relays will be utility grade in accordance with ANSI C37.1 standards.

3. Generator Metering

All meters to be 4-1/2 inch square switchboard type, 1% accuracy.

A.C. ammeter
A.C. voltmeter
Frequency meter 55-65 Hz
Power factor meter 0.5-1-0.5
Kilowatt meter
Four-position ammeter selector switch, OFF 1-2-3
Three-position voltmeter selector switch
Kilowatt hour meter
Voltage/VAR control switch
Synchroscope
Synchronizing lamps
KVAR meter
Synchronous selector switch auto/off/manual
Generator breaker control switch with indicator lamps
Generator coolant and stator temperature recorder
Bus voltmeter
Generator voltmeter

4. Synchronizing

Provide equipment for both manual and automatic synchronizing.

14.05 Tests

The following listed tests shall be performed on the unit and its components to insure that the start-up of the unit can be accomplished with a minimum of testing at the work site.

A. Turbine

1. The turbine shall be assembled at the factory and given a one hour mechanical run test with steam and the following test checks:

a. Test of lube oil console.

b. Check auxiliary oil pump operation.

c. Speed governor test; adjustment shall meet IEEE standard 122.

d. Emergency overspeed governor test; adjustment to +1% of the 10% above nominal mechanical overspeed trip. Run at just under trip speed for 15 minutes prior to testing. The mechanical trip shall be tested three (3) consecutive times with all trip speeds within +1% of trip speed. The trip throttle valve shall be used as part of this test.

e. Trip throttle valve test.

f. Steam seal regulator test, if applicable.

g. Static and dynamic balance of turbine rotor and operation of turbine rotor to 110% of rated speed for at least three minutes.

h. Assembly of turbine.

i. Physical and chemical analysis of major rotating parts.

j. Heat stabilization of shaft (if integral wheels-heat stabilization of rotor).

k. Hydrostatic test of turbine casing. All tests shall be at 1-1/2 times the maximum design pressures.

l. Set all safety devices and calibrate all instruments.

m. Test vibration sensing system on turbine.

n. Check all bearing operating temperatures.

o. Inspect thrust and journal bearings after tests.

B. Generator

1. Mechanical inspection

2. Mechanical balance and high speed run to 120% of rated speed.

3. Measurement of cold resistance of armature and field windings.

4. Di-electric test.

a. Armature - The standard test voltage shall be 60 Hz alternating voltage whose effective value is 1,000V plus twice the rated voltage of the generator. Test shall be applied for a duration of 60 seconds.

b. Field - The standard test voltage shall be a 60 Hz alternating voltage whose effective value will be ten times the field rated excitation voltage but not less than 1,500V. The test shall be applied for a duration of 60 seconds.

5. Excitation System:

a. D.C. resistance of all wiring.
b. Polarity test.
c. High potential test of windings at 60 Hz.

6. Voltage Balance

7. Phase Sequence

8. Open Circuit Saturation Curve

9. Rotor Impedance Test

10. Bearing Insulation Resistance

11. Shorted Field Turn Test

15.00 SKID K - COOLING TOWER

15.01 General

Cooling tower shall consist of 4-6 independent cooling tower cell skids with a single pump/chemical skid. Tower and pumps shall be sized to handle full VWO condenser load plus 15% for equipment cooling systems.

15.02 Cooling Tower Cells

A. Cooling tower cells shall be self-supported and shop fabricated. A water storage basin shall be built into the base and be of galvanized steel or fiberglass construction.

B. Piping and electrical work shall be done, as much as possible, during fabrication, leaving a minimum of work to be completed in the field.

C. Cooling tower shall be counter flow, mechanical draft type. Base unit will include drift eliminators but no plume inhibiting system.

D. The mechanical draft fans shall be two-speed, adjustable pitch type. Fan blades shall be manually adjustable.

E. Cooling tower construction shall be galvanized steel in accordance with ASTM A-385/386.

F. Drift loss shall be less than 0.0005% of the circulating water flow rate up to and including maximum flow rate.

G. Water out-fall to the circulating water pumps shall be provided with screens (1/2" x 1/2" size) of a corrosion resistant material.

H. Cooling tower piping shall be so fitted as to permit performance testing in accordance with CTI Code ATC-105.

I. Suction lines to the circulating water pumps shall be screened in the tower basin with 1/2" x 1/2" corrosion resistant mesh.

15.03 Circulating Water Pumps

A. The system shall have a minimum of two-100% capacity electric motor-driven circulating water pumps which take their suction from a header connecting the cooling tower cells. The pumps shall supply water to the plant condenser and other heat exchangers

through a single water line. The pumps shall be centrifugal type. The pumps shall be provided with a 5% flow margin and 10% head margin.

B. A low water trip shall be provided to protect the pumps from low water level in the cooling tower basins.

C. Pumps shall be mounted on a steel skid independent of the cooling tower cells.

15.04 Chemical Feed System

A. A chemical feed system consisting of metering pumps, mixers (where required) and bulk chemical containers shall be supplied. Chemicals for pH adjustment and biodispersion/slime prevention shall be supplied.

B. Chemical storage area shall share a skid frame with the circulating water pumps and shall include chemical loading facilities and spill containment.

C. Chemical feed into the cooling tower shall be manually controlled.

16.00 SKID L-1 - DEAERATING HEATER AND FEEDWATER SYSTEM

16.01 General

A. Skid shall include a deaerating heater, flash tank blowdown separator, boiler feed pumps, and associated piping.

B. The skid shall also contain an intermediate pressure PRV station from main steam which shall be designed to produce steam for export to the host. Pressure, temperature, and quantity of steam will vary from application to application. Contractor shall allow space and leave margins in pipe sizing to allow for this pressure/temperature steam conditioning system. Refer to SECTION 0059 for any steam export requirements.

16.02 Deaerating Heater

A. The deaerator shall be vacuum spray, tray-type with integral feedwater storage tank. Feedwater tank shall be of sufficient size to supply the boiler at rated conditions for 10 minutes. Storage tank may be segregated from deaerator or be a single vessel design.

B. Deaerator shall operate at 30 psia and have a design pressure of 50 psi.

C. The storage tank shall be provided with a steam sparging line for tank heating using steam from the main steam system.

D. The deaerator design shall comply with the requirements of the ASME Code, Section VIII, Division 1, and HEI standards for deaerators.

E. The deaerator shall reduce feedwater oxygen content to a maximum 0.005 cc per liter over the entire operating range of the unit.

F. Steam supply to the deaerator shall normally be from the uncontrolled turbine extraction. During low load operation, minimum pressure (pegging) auxiliary steam shall be supplied from the high pressure header.

G. Deaerator air removal system shall be sized to accept 100% makeup water at 60°F at rated flows.

16.03 Boiler Feed Pumps

A. The plant shall be provided with two 100% capacity high pressure boiler feed pumps. Each boiler feed pump shall supply feedwater through a common header system to the economizer inlet of the boiler. The pumps may be barrel or horizontally split case multistage centrifugal type.

B. One pump shall be motor-driven at constant speed for full-load operations. One pump shall be steam turbine driven. The steam source for the turbine pump shall be from the main steam system. The turbine pump shall exhaust to the deaerator under normal conditions but shall be controlled such that it will vent to the atmosphere upon a turbine trip and/or power failure. Each pump shall be provided with a 5% flow margin and 10% head margin.

C. Water for desuperheating process steam may be taken from the boiler feed pumps or separate desuperheating water pumps may be provided.

D. Each feed pump shall be provided with its own independent recirculation system. Recirculated water shall be piped individually to the deaerator storage tank.

E. Each boiler feed pump shall be designed to permit MCR flow to the boiler drum with boiler safety valves fully relieving.

16.04 Flash Tank

Flash tank shall be of steel construction and fabricated in compliance with ASME pressure vessel code. Tank shall separate boiler blowdown into

low pressure saturated steam for use in the deaerator and saturated liquid to be sent to a drain. Steam quality shall be 99% at tank outlet. Tank shall be designed to operate with no performance degradation for pressures from 0-35 psig and flow rates from 0-10% of feedwater flow rate.

16.05 Steam Conditioning Station

A. System shall be designed separately for each application which requires a process steam export to the host. Station shall reduce main steam pressure and temperature as required.

B. A space allowance shall be made for a conditioning station which will reduce main steam from the boiler to as low as 15 psig and 10°F above saturation temperature at that pressure.

C. A steam conditioning valve with integral desuperheater is the preferred station design, through designs with a separate pressure reducing valve and desuperheater are acceptable if the application requirements preclude the use of a conditioning valve.

16.06 Chemical Addition

Chemicals for feedwater pH control, oxygen removal, and corrosion protection shall be injected manually as needed. Chemicals shall be piped from Skid M.

17.00 SKID L-2 - CONDENSER AND CONDENSATE SYSTEM

17.01 General

A. The condenser shall be designed in parallel with the rest of the circulating water system to achieve the design criteria established in this paragraph.

B. The design wet bulb temperature shall be 76°F.

C. Approach temperatures and ranges in the steam turbine condenser, cooling tower and cooling water heat exchangers shall permit a maximum of 3.0" HgA operating backpressure in the steam turbine at full net electrical output at the design ambient wet bulb temperature.

D. The condenser and condensate system may be mounted on a single skid. A field erected support structure to raise the condenser above the condensate pumps, low NPSH condensate pumps, or a combination thereof shall be designed into the skid to prevent condensate flashing in the pumps.

17.02 Condenser

A. The main steam turbine condenser shall be a one or two-pass shell and tube type specifically designed for steam surface condenser service. This unit shall be designed to condense the steam from the turbine at maximum rated electrical output while maintaining a maximum 3.0" HgA vacuum. The condenser shall be designed to accept steam from the bubbling fluidized bed type combustor/steam generator during plant start-up and shut down and during off normal plant operating conditions. Equipment shall be designed and constructed in accordance with HEI standards. Performance calculations shall be based on HEI standards and shall use HEI coefficients.

Specific design criteria is as follows:

Tube Material	-	Type 304 SS (to be verified as suitable for water used)
Tube Diameter	-	3/4 inch
Tube Thickness	-	20 BWG gauge or less
Maximum Water Velocity	-	7.0 FPS
Fouling Factor	-	85% clean

B. The hot well shall have available volume, sufficient to contain all of the condensate produced in the condenser in a period of 3 minutes under conditions of maximum load.

C. Tube sheets shall be carbon steel and shall be so designed to permit water box removal without disturbing the shell to tube sheet joints.

D. Water boxes shall be carbon steel with epoxy coating. Water boxes shall be of divided type to permit tube cleaning with plant on line.

E. The water boxes shall be rated for the full shut-off head of the circulating water pumps.

F. The steam inlet expansion joint shall be a suitable type. The joint shall be able to withstand pressures from full vacuum to 15 psig at 200°F maximum temperature.

G. Base condenser design shall allow for make-up rate of up to 25,000 lb/hr.

17.03 Condensate Pumps

A. Two, multi-stage 100% capacity condensate pumps shall take suction from the condenser hotwell and deliver condensate to the deaerator. The pumps shall be vertical can type or horizontal type electric motor driven designed specifically for this type of operation.

The pumps shall be sized with a 20% flow margin and 44% friction head margin.

B. Pumps shall be designed to prevent condensate flashing or cavitation.

17.04 Circulating Water Header

Circulating water for miscellaneous cooling applications shall be distributed from the condensate skid.

18.00 SKID M - PLANT AUXILIARY SKID

18.01 General

Auxiliary skid shall include the following equipment:

- Air compressors
- Oil/Water Separator
- Condensate/Makeup System
- Chemical Feed

18.02 Air Compressors

A. The compressed air system will supply air to the following systems:

- Baghouse - Pulse Air for Bag Cleaning
- Ash Handling
- Service Air
- Instrument Air

B. The compressed air system shall consist of two compressors which supply both the service and instrument air systems. Air inlets shall be equipped with air filter/silencer. An aftercooler with moisture trap and appropriate oil and particulate filters shall be provided.

C. Two identical 100%, non-lubricated type, electric motor-driven air compressors shall be provided. Each air compressor shall be sized for the required service but shall have a 20% flow design margin over that calculated at 125 psig minimum discharge pressure. Air receiver, 300 gallon minimum, shall be provided.

D. Compressors shall be air cooled.

E. Controls for service air piping shall be arranged to allow preferential supply to the instrument air system in the event of low air pressure. Controls shall provide for automatic unloading, shutdown, start-up and backup features.

F. A two-tower desiccant type air dryer, regenerated by heat of compression, shall be provided to deliver dry instrument quality air at -40°F dew point. An after filter shall be installed downstream of the air dryer to eliminate desiccant carryover into the air system.

G. The air header pressure shall be controlled by the receiver pressure which is maintained by the load/no load type compressor regulator. An automatic back pressure regulator shall be provided on the service air system to prevent depressurization of the instrument air system by excessive service air use or leakage.

18.03 Oil/Water Separator

A. All plant drains will discharge to a common site sump. All waste water shall be pumped from that sump to an oil/water separator, located on Skid M and be discharged to a discharge manhole.

B. Base design oil/water separator shall be 200 gpm. Separator shall be located on Skid M.

C. Separator oil storage shall be 55 gal. min.

D. The skid shall provide for two water pump motor starters, one to power the site sump pump (off-skid) and the second to power the water discharge pump (off-skid), if required.

18.04 Condensate/Makeup System

A. Condensate/makeup system shall consist of demineralizer truck facilities, a storage tank, and makeup transfer pumps. In specific applications, this system shall also include condensate return piping.

B. Facilities for the demineralizer trailer shall include:

1. Piping for raw water, discharge water, and demineralized water.

2. 480V and 120V electrical hookups.

3. Communications hookup for alarms, flow rate and trips.

C. Skid-mounted condensate tank shall be fiberglass with a capacity of 7,500 gallons (minimum) or 10 hours of plant makeup under normal steam export conditions.

D. Two 25 gpm condensate transfer pumps shall be provided. A flow margin of 5% and a friction head margin of 10% shall be included in the pump design.

18.05 Chemical Feed Equipment

Chemical feed systems for scale control pH adjustment, and oxygen scavenging shall be provided. The systems shall be of prepackaged design and shall not make use of 55 gallon type drums. The system shall be contained in a diked area sized to contain 110% of the largest storage tank's volume. A minimum of three chemical feed systems shall be provided.

19.00 SKID N - CONTROL ROOM/EMPLOYEE FACILITIES

19.01 A control room with break room, and sanitary facilities shall be built into a construction trailer or similar structure. Control system shall be constructed, however, such that it may be located in an existing building with minimum modification as required by a specific application.

19.02 Control System General Configuration

A. A general description of the Central Control System (CCS) is provided in paragraph 5.05.

B. The CCS shall interface with local controls and programmable controllers being used for system sequential control and interlocking.

C. Analog meters shall be provided for key parameters.

D. For locally controlled systems, a minimum of one system trouble alarm is required. Interface to the CCS is required.

E. Local indicating devices (pressure gauges, thermometers, etc.) shall be furnished for local monitoring of selected plant parameters. Use of local only indications at remote process areas is to be minimized.

F. Continuous emissions monitoring, metering and recording shall be provided with input to the CCS.

19.03 Control Room Hardware

The CCS equipment consisting of control panels, electronic rack, color CRT's, operator's keyboards, printer and input/output racks shall be supplied on the skid.

19.04 Employee Facilities

A. A break room with eating/break facilities for 8 people, refrigerator and microwave shall be provided adjacent to the control room.

B. A locker/changing room with 1 water closet and 10 sets of half lockers shall be provided. Water closet shall be located such that access is through the break room with direct access from the Control Room.

19.05 UPS (Uninterruptible Power Sypply) System

UPS shall consist of a rectifier inverter unit with battery backup. The UPS shall be located in the battery room and have a capacity of at least 125 percent of the D.C. load. Batteries shall be sized for 30 minutes of running time upon a power failure.

20.00 SKID O-1 - BOTTOM ASH COLLECTION

A roll-off bin shall be provided to accept bottom ash from a conveyor from the boiler. A water spray header shall be provided, if required, for dust suppression. This equipment may be incorporated into one of the boiler skids.

21.00 SKID O-2 - FLY ASH COLLECTION

21.01 A silo shall be designed to accept fly ash from various collection points in the boiler, mechanical collectors and baghouses. Ash shall be conveyed via a vacuum system to the top of the ash silo where the ash will be discharged into the silo. The conveying air shall be discharged to atmosphere through a self-cleaning fabric filter unit. The ash silo shall provide three days of fly ash storage capacity based on normal plant operating conditions. The ash silo and piping shall be constructed of materials experience has shown to be suitable for intended service.

21.02 Ash shall be loaded into trucks for removal from the site by means of an ash conditioning system. Conditioning shall be in the form of a water based reagent (1% phosphoric acid solution) and mixing pug mill. The system shall be designed to add up to 25% reagent by weight to the ash being loaded. Reagent storage shall be suitable for at least seven days of full load operation.

21.03 The ash system shall be provided with controls to allow manual operation of the system from the Central Control Room and from a local control station.

21.04 The ash system shall be designed to have a capacity based on the requirements of the equipment and systems provided by the Contractor plus a reasonable factor of safety.

21.05 Fly ash silo shall be skid mounted, requiring a minimum of field work for erection and piping.

22.00 SKID P - START-UP FUEL STORAGE

Propane will be used as a start-up fuel for the steam generator. The plant design shall provide for the outdoor storage of sufficient propane for at least four boiler start-ups with a 10,000 gallon minimum tank size. Tanks shall be designed and constructed in accordance with Section 8 of the ASME Pressure Vessel Code, NFPA 58 and applicable OSHA regulations (1910.110). Vaporization equipment shall be steam or atmospheric type.

SCOPE OF WORK
AND
BASIS FOR DESIGN
WILSON ENERGY GENERATION FACILITY SKIDS
ON-SITE CONDITIONS

1.00 INTRODUCTION

2.00 DESCRIPTION OF WILSON EGF

3.00 SITE CONDITIONS AND BASIS OF OPERATION

4.00 CODES AND STANDARDS

5.00 SITE PREPARATION

6.00 SKID ARRANGEMENT/OPTIONS

7.00 SITE INTERFACES

8.00 INTERSKID PIPING

9.00 INTERSKID WIRING

10.00 SPECIAL SITE CONSIDERATIONS

1.00 INTRODUCTION

1.01 The purpose of this SECTION is to provide general design criteria to the Contractor which must be met in his implementation of the detailed design of the project. No relaxation of the requirements contained in this SECTION shall be permitted without the express written consent of the Owner.

1.02 The Contractor may provide alternatives to the design described in this SECTION provided that the performance and standards of quality and operational flexibility specified below are maintained. Alternatives which enhance reliability are encouraged.

1.03 This SECTION provides site specific criteria to provide a design basis for the installation and integration of the skid components described in SECTION 0058. The skid components are to be assembled at a 400,000 ton/yr Municipal Refuse Recycling Facility (MRF) on a site on State Road No. 1606 south of Wilson, NC. Once both facilities are in operation, the Wilson EGF shall:

A. Provide up to 8.4 MW of electrical power to the site electrical system on a 7-day a week, 24 hours per day basis.

B. Receive RDF and organic material from the MRF for firing the boiler.

2.00 DESCRIPTION OF WILSON EGF

2.01 The Wilson EGF is to be located adjacent to the Materials Recovery Facility (MRF). The two facilities shall be built simultaneously. Electricity produced by the Wilson EGF shall be used for internal loads at the MRF, with the balance sold to the local utility.

2.02 Major equipment shall include a bubbling fluidized bed type boiler, steam turbine, fuel storage building and associated auxiliaries. Approximately 94,000 tons/yr of fuel will be combusted in the Wilson EGF. Trucking facilities shall be provided for chemical delivery, water treatment and ash removal.

3.00 SITE CONDITIONS AND BASIS OF OPERATION

3.01 The EGF site is shown on the drawings.

3.02 Site and Climate Information

A. General

Contractor shall review specific site information contained herein and notify Owner of any required design modifications and/or equipment performance implications due to differences between the design basis for the general skids and this specific site.

B. Site and climate information for Wilson County is as follows:

1. Design Dry Bulb Temperature: 92°F - maximum
10°F - minimum

2. Design Wet Bulb Temperature: 76°F

3. Snow Loading for Structures: 20 lbs/ft^2

4. Wind Velocity : 80 miles per hour

5. Drainage and Wastewater Handling: 100-year storm

6. Seismic Zone: Zone 0 (Skids are designed for Zone 3)

7. Site Elevation: Approximately 100 ft above sea level

8. Soil Loading: (Later) - 3000 psf for bidding purposes

9. Design Rainfall: 4" per hour

3.03 Environmental/Regulatory Requirements

A. The following criteria shall constitute a design basis for the facility but are subject to change, as the Owner obtains air, environmental, and Site Use Permits.

1. Noise: Maximum of 65 dBA at the property line

2. Air: Emission limits as defined in SECTION 0081

3.04 Design Life

The EGF shall be designed to produce electricity at a minimum annual capacity factor of 90% for 20 years.

3.05 Modes of Operation

The plant shall be capable of three modes of operation. All modes shall be achievable on a continuous basis running at the capacity factor specified above.

A. Run at full boiler output producing approximately 8.4 MW to be used at the Wilson MRF site with any excess sold to the utility.

B. Partial load operation to follow the electrical load imposed by the MRF equipment, approximately 3-4000 kW.

C. Partial load at 7.0 MW fixed output to export power to the utility.

3.06 The Performance Guarantees called for in SECTION 0081 require specified levels of performance under specific operating conditions. The conditions so specified shall be the Guarantee Conditions. The Design Conditions of the plant shall contain sufficient and suitable margins within components and systems such that the ability of the boiler to operate continuously at its Guarantee Conditions shall not be compromised due to deterioration of equipment as it ages. In order to provide for this, all systems shall be designed with margins that shall permit the boiler to operate continuously at 5% above its rated steam pressure and flow.

3.07 All systems involved in the processing of fuel and combustion gas shall recognize the variability in refuse derived fuels (RDF) and be designed to handle such fuel specified under SECTION 0080.

4.00 CODES AND STANDARDS

4.01 The design, manufacture, erection and start-up of equipment and systems shall be in accordance with governing Codes and Standards.

4.02 The governing Codes and Standards shall be those that are in effect at the time the Contract is signed. When two or more codes describe a given requirement, the more strict requirement shall be used.

4.03 All applicable local, state and federal requirements and permit conditions shall be complied with by the Contractor unless specified otherwise. Use of asbestos shall not be permitted for any application.

4.04 The detailed design of each system and equipment specification shall contain reference to the specific code or standard to which the item is designed. In general, the following Codes and Standards shall apply.

- American Society of Mechanical Engineers (ASME)
- National Solid Waste Management Association (NSWMA)

- Solid Waste Association of North America (SWANA)
- American Society of Civil Engineers (ASCE)
- American National Standards Institute (ANSI)
  - a. Code for Power Piping, B31.1
  - b. Dimensional Specifications as applicable
- American Society of Testing and Materials (ASTM)
  - a. Material Specifications as applicable
  - b. Sampling and Testing Standards as applicable
  - c. RDF - ASTM E1126
- American Boiler Manufacturers Association (ABMA)
- American Chain Association (ACA)
- American Welding Society (AWS)
- American Water Works Association (AWWA)
- American Iron and Steel Institute (AISI)
- Crane Manufacturers Association of American (CMAA)
- Thermal Insulation Manufacturers Association (TIMA)
- Tubular Exchanger Manufacturers Association (TEMA)
- Heat Exchanger Institute (HEI)
- American Petroleum Institute (API)
- Hydraulics Institute (HI)
- National Fire Protection Association (NFPA)
  - a. National Electrical Code
  - b. Fire Protection Codes as appropriate
- Institute of Electric and Electronics Engineers (IEEE)
- National Electrical Manufacturers Association (NEMA)
- National Electrical Safety Code (NESC)

- American Association of State Highway and Transportation Officials (AASHTO)
- Steel Structures Painting Council (SSPC)
- American Institute of Steel Construction (AISC)
- American Concrete Institute (ACI)
- American Society of Heating, Refrigerating, and Air Conditioning Engineers (ASHRAE)
- Manufacturers Standardization Society (MSS)
- Metal Building Manufacturers Association (MBMA)
- Pipe Fabrication Institute (PFI)
- Compressed Air and Gas Institute (CAGI)
- Conveyor Equipment Manufacturers Association (CEMA)
- Industrial Gas Cleaning Institute (IGCI)
- Standard Building Code (SBC)
- Instrument Society of American (ISA)
- Environmental Protection Agency (EPA)
- Occupational Safety and Health Administration (OSHA)
- Factory Mutual System (FM)

  a. Handbook of Industrial Loss Prevention
  b. Factory Mutual Approval Guide

- Underwriters Laboratories Inc. (UL)

  a. UL Products Lists (where not FM listed)

- State of North Carolina Building Codes (NCS Building Codes)

  a. Sanitary Code
  b. Erosion Control Code
  c. State Building Code
  d. Fuel Gas and Plumbing Code
  e. Fire Protection Code

- North Carolina Department of Environment, Health and Natural Resources (DEHNR)

5.00 SITE PREPARATION

5.01 General

The Wilson EGF shall be constructed on concrete slabs and equipment footings as required.

5.02 Site Preparation

Site shall be rough graded in conjunction with the construction of the MRF. Contractor shall be responsible for any additional required site excavations, compaction, and final grading within the Wilson EGF area.

5.03 Drainage

A. Site shall include a drainage system capable of carrying runoff from a 100-year storm. A site sump may be used to collect contaminanted drains. Under normal operation, the site sump(s) shall pump up to 75 gpm of potentially contaminated water to the oil/water separator on Skid M.

B. The site sump(s) shall be fitted with outdoor sump pumps to carry equipment drains to the oil/water separator.

C. The oil/water separator shall connect directly to the MRF site drainage system (see Paragraph 7.03).

5.04 Concrete Slabs

A. Concrete slab(s) shall be reinforced concrete cast in place and be designed against frost heaves. Slabs shall be designed so that all rain falling on the slabs is directed to the drainage system.

B. Footings for heavy equipment shall be provided as required by the Contractor. Supports integral with slabs are preferred.

C. Foundation design shall be based on the Contractor's investigation of the site. Bid shall be based on a 3000 psf soil pressure.

5.05 Paving/Access

A. Vehicle access ways shall be provided in the following areas:

1. Demineralizer truck parking near Skid M
2. Roll-off bin at Skid O-1
3. Chemical delivery to Skids K and M
4. Propane delivery to Skid P

B. The above areas may be either concrete or asphalt paving.

C. Trailer stands shall be provided with concrete pads for support of cranked-down dolly wheels.

D. Flexible and rigid pavements are to be designed for an AASHTO HS20-44 truck loading. The site roads are to be geometrically designed to accept AASHTO WB-50 semi-trailer truck combinations.

5.06 Elevated Structures

A. Seismic design shall be in accordance with the NCS Building Code for Zone 0.

B. It is intended that pipe and conduit be supported from skid structures to the maximum extent possible; however, some external supports shall be required. These supports shall be of galvanized steel construction and be designed for bolting directly to concrete slabs if possible.

5.07 Construction Materials

A. Soils

1. Soil Borings: The taking of borings and preparation of project geotechnical report will be the Contractor's responsibility prior to final negotiation of lump-sum contract price.

2. Piles: Pile type and capacity to suit geotechnical conditions and design loadings.

3. Spread Footings: Allowable maximum soil pressure--to suit geotechnical conditions as confirmed.

4. Backfill: Use excavated material to maximum extent, where suitable. Backfill material to be free from debris, roots, wood, refuse, cinders, coal, frozen materials and petroleum contamination. Maximum size shall be 2".

B. Reinforced Concrete

Concrete strength of slabs and footings: 3000 psi at 28 days.

C. Structural Steel

Type A36 unless unusual loads warrant a higher strength steel to be used.

6.00 SKID ARRANGEMENT/OPTIONS

6.01 Fuel receiving/Storage skids

A.

Type	Quantity
A	None
B-1	None

B. Modifications to meet site conditions:

Use fuel storage system designed specifically for this application. (Note: This design does not include a truck dock for delivery of RDF to the Wilson EGF's RDF storage building.)

6.02 Fuel Feed Conveyors

A. General

Fuel feed conveyor system shall be designed to connect fuel receiving and storage area to the fuel feed system. Contractor may modify the arrangement if reliability or efficiency advantages can be demonstrated.

B. System shall consist of the following arrangement:

1. One conveyor shall take RDF and organic material from the MRF and convey the fuel to a traveling tripper for stockout to the fuel storage building. Conveyors shall be enclosed type. Conveyor enclosures shall bolt with gasketed interfaces to enclosures on the adjacent structures and conveyors. Conveyors shall be adequately supported either from adjacent structures or by independent supports.

2. The traveling tripper conveyor shall be provided with an over feed chute to allow by-pass of the fuel storage system due to a reclaimer outage. The reclaim mechanism shall be a single screw feeder which is capable of traveling the entire fuel

storage area. The screw feeder shall feed a belt reclaim conveyor.

3. The belt reclaim conveyor shall feed a second reclaim conveyor (which is also fed from the storage by-pass) which carries the fuel to the boiler fuel metering bins.

4. The system shall provide for overfeed of fuel to the boiler fuel metering bins. Overfeed fuel shall be returned to the storage building.

C. Conveyor Control System

Conveyor system shall be controlled as a part of the fuel handling/storage system from the CCS. Electric or hydraulic motors, complete with local emergency stops and interlocks, shall be provided.

D. Maintenance Access

Doors and/or removable panels shall be provided at critical maintenance locations as well as likely RDF accumulation points.

6.03 Fuel Metering Skids

A.

Type	Quantity
C	Two

B. Modifications to meet site conditions:

- Both skids to have the same layout.

6.04 Forced Draft Fan(s)

A.

Type	Quantity
D-1	One

B. Modifications to meet site conditions:

The combustion air stream shall be taken from the atmosphere and not from the EGF's RDF storage building.

6.05 Boiler Components

A. The manufacturer's standard components are acceptable.

B. Modifications to meet site conditions:

1. Contractor to include statement concerning the impact of burning 100% organic fines on its standard boiler package.

2. CEM's to meet requirements of North Carolina. DEHNR

3. Stack height to be 175 feet from grade.

6.06 Electrical Switchgear

A.

Type	Quantity
I	1

B. Modifications to meet site conditions:

Skid I - None

6.07 Steam Turbine Generator

A.

Type	Quantity
J-1	1
J-2	1

B. Modifications to meet site conditions:

Skid J-1 - None
Skid J-2 - None

6.08 Cooling Tower

A.

Type	Quantity
K	1

B. Modifications to meet site conditions:

Skid K - None

6.09 Condensate/Feedwater System

A.

Type	Quantity
L-1	1
L-2	1

B. Modifications to meet site conditions:

Skid L-1 - No steam export required.

Skid L-2 - None

6.10 Miscellaneous Skid

A.

Type	Quantity
M	1

B. Modifications to meet site conditions:

Skid M - Demineralized water storage capacity - 5000 gal.
- Oil/Water separator capacity - 75 gpm

6.11 Control/Personnel

A.

Type	Quantity
N	1

B. Modifications to meet site conditions:

Skid N - None

6.12 Ash System

A.

Type	Quantity
O-1	1
O-2	1

B. Modifications to meet site conditions:

Skid O-1 - None
Skid O-2 - None

6.13 Start-up Fuel

A.

Type	Quantity
P	1

B. Modifications to meet site conditions:

Skid P - None

7.00 SITE INTERFACES

7.01 General

The Contractor shall be responsible for all interfaces of the Wilson EGF to the balance of the site.

7.02 Water Connection

Contractor shall continue an underground water line to the Wilson EGF from the MRF building. Raw water shall be supplied to the individual skids either underground or from a pipe rack at the Contractor's discretion. In addition, to supplying water to its own skids, the Contractor shall supply water to the demineralizer trailer supplied by the Owner. Demineralizer water supply shall be 20 gpm.

7.03 Sewer Connection

As noted above, the Wilson EGF site is to be provided with site sump(s) and a discharge manhole. The discharge sump shall receive the following inputs:

A.	Oil/Water Separator	-	75 gpm
B.	Sanitary Drains	-	20 gpm
C.	Demineralizer Trailer	-	30 gpm

The discharge manhole shall drain by gravity to the MRF connection point.

7.04 Fuel Conveyor(s)

The Contractor shall provide and power (from a spare breaker on Skid I) a covered 25 TPH organic fines and RDF transfer conveyor from the MRF process to the fuel storage building.

7.05 Electrical (4.16 kV) Supply

The MRF substation will include a 4.16 kV breaker position to supply and receive electricity to and from the Wilson EGF. The Contractor shall connect the Wilson EGF to the MRF substation by an underground ductbank.

7.06 Fire Protection

The Contractor shall extend the underground fire protection system to individual skid connections as required.

8.00 INTER-SKID PIPING

8.01 All piping shall be designed and installed in accordance with the general piping guidelines in SECTION 0058, paragraph 5.02.

8.02 Piping obstructing maintenance areas shall be avoided. In particular, piping shall not obstruct the following areas:

A. A 10 foot wide area adjacent to the turbine/generator for rotor/diaphragm removal.

B. A 10 foot wide area all around the boilers in the combustor area.

C. An area adjacent to the baghouses for filter media replacement.

D. Areas near the deaerator and condenser for tray and tube maintenance.

8.03 Piping shall be supported on racks above the skids to allow for personnel walkways. Lowest point of piping or supports shall be a minimum of 8'-0" from the concrete slab.

8.04 Circulating water lines from the cooling tower shall be direct buried FRP or Owner approved alternative. Minimum depth of burial shall be 3'-0". Deeper burial or concrete encasement shall be used, if required, to ensure the pipe experiences no undue loads from structures or vehicles above the piping.

8.05 Design temperature for insulation and heat tracing shall be 10°F.

8.06 Piping from Skid P to the boilers shall be underground. Underground steel piping shall be externally wrapped and coated for corrosion protection.

8.07 There shall be no pipe bridges across truck access areas.

9.00 INTERSKID WIRING

9.01 All wiring, conduits, and cable tray used between skids and wiring to interface points shall be designed and installed in accordance with the general guidelines in SECTION 0058, paragraph 4.04.

9.02 The Contractor shall furnish and install all power and control feeds to non-skid motors. Power for these motors may be taken from nearby MCC spare positions or directly from Skid I spare breakers.

9.03 Area Lighting

A. General - Individual skids shall be provided with their own lighting of operation and maintenance. Area lighting shall be fed from a panelboard on Skid I. Area lighting shall be for off-skid areas, traffic areas, walkways and general security.

B. Site shall be provided with the following illumination levels as a minimum:

Work/Maintenance Area	30 fc
Perimeter	2 fc

C. Area lighting shall be by metal halide fixtures mounted on independent poles, skid-mounted poles or existing structures.

9.04 Conduit or tray runs shall follow the guidelines contained in paragraph 8.00.

9.05 Grounding

A. The ground system shall consist of a grid of bare, stranded copper cables (#4/0 AWG) buried under the Wilson EGF area connected to ground rods or wells. Minor structures may use a loop design. Taps to above grade equipment shall be a minimum of #2/0 AWG, insulated.

B. System resistance shall be measured with a three terminal "megger" type ground tester which applies A.C. current to the system and readout in D.C. ohms. Two reference ground probes shall be used. Owner shall select location for formal test of the ground system. Resistance to ground shall not exceed one ohm. Test results shall be submitted to the Owner within five days.

10.00 SPECIAL SITE CONSIDERATIONS

10.01 Organic Fine RDF

The plant shall be designed to burn the organic fine fraction of RDF. Material handling, combustion, and pollution control systems shall be designed to accommodate the burning of the finer, denser, lower Btu fuel. Emissions, efficiency, material handling and steam output implications of burning organic fines shall be discussed in Contractor's proposal.

WILSON RESOURCES L.P.
HOUSTON, TEXAS

WILSON ENERGY GENERATING FACILITY
CONCEPT DESIGN

PREPARED BY

TRI-MONT ENGINEERING COMPANY
THE SCHRAFFT CENTER, SUITE 208
529 MAIN ST.
BOSTON, MA 02129

TRI-MONT DRAWING NO.	TITLE
GENERAL DRAWINGS	
D-071-05-T1	TITLE SHEET
D-071-05-F1	PIPING & INSTRUMENTATION DIAGRAM, SYMBOLS
D-071-05-F2	PIPING & INSTRUMENTATION DIAGRAM, SKIDS A, B, & C - FUEL RECEIVING/STORAGE
D-071-05-F3	PIPING & INSTRUMENTATION DIAGRAM, SKID D - BOILER AUXILIARIES
D-071-05-F4	PIPING & INSTRUMENTATION DIAGRAM, SKIDS E & F
D-071-05-F5	PIPING & INSTRUMENTATION DIAGRAM, SKIDS G & H - FLUE GAS SYSTEM
D-071-05-F6	PIPING & INSTRUMENTATION DIAGRAM, SKID J - TURBINE GENERATOR
D-071-05-F7	PIPING & INSTRUMENTATION DIAGRAM, SKID K - COOLING TOWER & CIRC WATER
D-071-05-F8	PIPING & INSTRUMENTATION DIAGRAM, SKID L - CONDENSATE & FEEDWATER SYSTEMS, POWER OPTION
D-071-05-F9	PIPING & INSTRUMENTATION DIAGRAM, SKID M - MISCELLANEOUS SKID
D-071-05-F10	PIPING & INSTRUMENTATION DIAGRAM, SKID O - ASH HANDLING SYSTEM
D-071-05-F11	PIPING SKID - INTERCONNECTION DIAGRAM - POWER OPTION
D-071-05-M9	HEAT BALANCE - 100% OUTPUT, 3" HGA BACKPRESSURE CASE
D-071-05-E1	SKID I - ONE LINE DIAGRAM

NEW SECTION 5

PRELIMINARY

No.	Description	By	Date	Appd
E	CONTRACT AWARD	MIR	11/23/94	GJC
D	FOR BID	HC	7/15/94	GJC
C	FOR REVIEW	C.U.	6/30/94	GJC
B	FOR REVIEW	HC	6/6/94	GJC
A	FOR BID	HC	2/25/94	GJC

REVISIONS

TRI-MONT Engineering Company
Boston, MA.

CLIENT: WILSON RESOURCES L.P.

PROJECT: WILSON EGF

Title: TITLE SHEET

TRI-MONT	By	Date	Client	By	Date
Drawn	PJC	2/7/94	Approved		
Checked	G.J. CAHILL	2/7/94	Approved		
Approved	G.J. CAHILL	2/7/94	Approved		

Scale:	Job No.	Drawing No.	Rev. No.
NONE		D-071-05-T1	E

12/2/94

VALVES

NORMALLY OPEN	NORMALLY CLOSED	TYPE
		GATE
		GLOBE
		CHECK
		BUTTERFLY
		DIAPHRAGM
		NEEDLE
		PLUG
		BALL
		STOP CHECK (SWING TYPE)
		STOP CHECK (GLOBE TYPE)
		STOP CHECK (ANGLE TYPE)
		STOP (POWER ASSIST)
		QUICK OPERATION
ADD ARROWS TO INDICATE PORTING		ANGLE, 3 WAY, 4 WAY — TYPICAL-BODY TYPE SYMBOL TO BE ADDED
		SAFETY OR RELIEF
		LINE BLIND, SPECTACLE
		KNIFE, SLIDE
		POST INDICATOR
		VALVE WITH HOLE THRU DISC.
		QUICK OPERATING-SPRING RETURN
		DAMPER

VALVE OPERATORS

SR

PNEUMATIC DIAPHRAGM OPERATOR (SPRING OPPOSED)
FAILURE POSITION (TYPICAL)
F.C. FAILS CLOSED
F.O. FAILS OPEN
F.L. FAILS LOCKED
F.I. FAILS INDETERMINATE
TYPICAL SYMBOL FOR POSITIONER. (SR = SPLIT RANGE)
ALSO USED FOR LIMIT SWITCHES. POSITION TRANSMITTER, OR OTHER APPENDAGES WITH APPROPRIATE SIGNALS TO DEVICES EXTERNAL TO VALVE ASSEMBLY.

CYLINDER-OPERATOR SINGLE & DOUBLE ACTING

ELECTRIC MOTOR OPERATOR

SOLENIOD OPERATOR (SHOWN WITH 3-WAY VALVE)
POWER SOURCE (AC WHEN NOT NOTED)
PORT IDENTIFICATION
NORMALLY CLOSED PORT
PATH WHEN ENERGIZED
PATH WHEN DE-ENERGIZED

HANDWHEEL OPERATOR (WHERE NOT NORMAL FOR TYPE OF VALVE

GEAR OPERATOR

MISCELLANEOUS DEVICES

TRAP (T) OR DRAINER (D)
"Y" STRAINER
FLANGE
START-UP STRAINER
SINGLE BASKET STRAINER
DUPLEX BASKET STRAINER
SIGHT FLOW INDICATOR
FLOW RESTRICTING ORIFICE
FLOW METER ORIFICE
FLOW NOZZLE
DESUPERHEATER (MECH. ATOMZING)
DESUPERHEATER (STEAM ASSISTED)
PRESSURE BREAKDOWN DEVICE
HYDRANT
DRAIN FUNNEL
EXPANSION JOINT
ELECTRIC MOTOR
ELECTRIC INTERLOCK

REDUCER
CAP
RUPTURE DISC.
UNION
FILTER
MIXING NOZZLE
PLUGGED CONN.
SOUND ANTENUATOR
BAROMETRIC LEG
MIXER OR AGITATOR
POSITIVE DISPLACEMENT METER

PUMPS & FANS

CENTRIFUGAL PUMP OR FAN (ELECTRIC MOTOR DRIVEN)
POSITIVE DISPLACEMENT PUMP (ELECTRIC MOTOR DRIVEN)
METERING PUMP (ELECTRIC MOTOR DRIVEN)
VERTICAL PUMP (ELECTRIC MOTOR DRIVEN)

MISCELLANEOUS CODING

EM — ITEM FURNISHED WITH EQUIPMENT WHEN SUPPLIED IN VENDORS PIPING

CONN. LINE ON OTHER DRAWING (CO-19) — TERMINAL ARROW TO OR FROM

DRAWING No. FOR CONT-INUATION — TERMINAL ARROW TO AND FROM

SYSTEM SYMBOL, LINE No. — CO-23 — LINE NUMBERING

00-0-00
VALVE NUMBERING
VALVE NUMBER 1-99
SOURCE OF SUPPLY E-SUPPLY BY EQUIP. MFR. V-SUPPLY BY CONTRACTOR
SYSTEM DESIGNATION

LINE CODING

FLOW ARROW
P — PITCH ARROW
PRIMARY SYSTEM
SECONDARY LINE
PNEUMATIC LINE
CAPILLARY LINE
ELECTRICAL LINE
HYDRAULIC
—V—V— VENT
DCS SOFTWARE LINK

INSTRUMENT DEVICES

LOCALLY MOUNTED DEVICE-REMOTE FROM MAIN CONTROL ROOM AREA
AUXILIARY PANEL
MAIN CONTROL ROOM FRONT OF PANEL DEVICE
DUPLEX FUNCTION
FLOW-THROUGH DEVICE
O C — OPEN-CLOSE FOR INDICATING LIGHT
TEMPERATURE ELEMENT (INCLUDING SIGNAL AND RECEIVER) ELEMENT IS THERMOCOUPLE TYPE UNLESS OTHERWISE NOTED
TE — WELL (TAG SAME AS ELEMENT EXCEPT "TW" IN PLACE OF "TE") PAD OR OTHER ATTACHMENT
DESIGNATION OF SOURCE OF SUPPLY — PI 34 — SUPPLIED VIA INSTRUMENT VENDER
PI EM — SUPPLIED WITH MAJOR EQUIPMENT BY EQUIPMENT MANFACTURER
DEVICE CONNECTED TO DCS (DISTRIBUTED CONTROL SYSTEM)
SAMPLE COOLER
126 — COMPUTER INPUT COMPUTER POINT NO.
CS O C — CONTROL SWITCH PROVIDED WITH OPEN-CLOSE INDICATING LIGHTS FROM LIMIT SWITCH

INSTRUMENT IDENTIFICATION

CODE LETTER	FIRST LETTER	SUCCEEDING LETTER
A	ANALYSIS	ALARM AMPLIFY
B	BURNER FLAME	BIAS STATION
C	CONDUCTIVITY (CS-CONTROL SWITCH)	CONTROL
D	DENSITY, SP.GR.	DIFFERENTIAL
E	VOLTAGE	PRIMARY ELEMENT
F	FLOW	RATIO
G	GAGE	GLASS
H	HAND-OPERATED	HIGH
I	CURRENT	INDICATE
J	POWER	SCAN
K	TIME, TIME SCHEDULE	CONTROL STATION (A/M STATION)
L	LEVEL	LIGHT LOW
M	MOTOR, MOISTURE	MIDDLE OF INTERMEDIATE
N	——	——
O	——	——
P	PRESSURE, VACUUM	POINT (TEST CONNECTION)
Q	QUANTITY, EVENT	INTERGATE, TOTALIZE
R	RADIATION	RECORD
S	SPEED, FREQUENCY	SWITCH
T	TEMPERATURE	TRANSMIT
U	MULTIVARIABLE	MULTIFUNCTION
V	VISCOSITY	VALVE
W	WEIGHT	WELL
X	UNCLASSIFIED	UNCLASSIFIED
Y	EVENT	RELAY, COMPUTING DEVICE CONVERTER, TRANSDUCER
Z	POSITION	DRIVE UNIT

ABBREVIATIONS

POWER SUPPLY TYPE

A/S	AIR SUPPLY
ES	ELECTRIC SUPPLY
GS	GAS SUPPLY
HS	HYDRAULIC SUPPLY
NS	NITROGEN SUPPLY
SS	STEAM SUPPLY
WS	WATER SUPPLY
AC	ALTERNATING CURRENT
DC	DIRECT CURRENT

PRELIMINARY

No.	Description	By	Date	Appd
F	CONTRACT AWARD	MIR	11/23/94	GJC
E	FOR BID	HC	7/15/94	GJC
D	FOR REVIEW	C.U.	6/29/94	GJC
C	FOR REVIEW	HC	6/6/94	GJC
B	FOR REVIEW	HC	5/20/94	GJC
A	FOR REVIEW	HC	12/25/94	GJC

REVISIONS

TRI-MONT Engineering Company
Boston, MA.

CLIENT: WILSON RESOURCES L.P.

PROJECT: WILSON EGF

Title: PIPING & INSTRUMENTATION DIAGRAM SYMBOLS

TRI-MONT	By	Date	Client	By	Date
Drawn	PJC	2/7/94	Approved		
Checked	G.J. CAHILL	2/7/94	Approved		
Approved	G.J. CAHILL	2/7/94	Approved		

Scale:	Job No.	Drawing No.	Rev. No.
NONE		D-071-05-F1	F

12/2/94

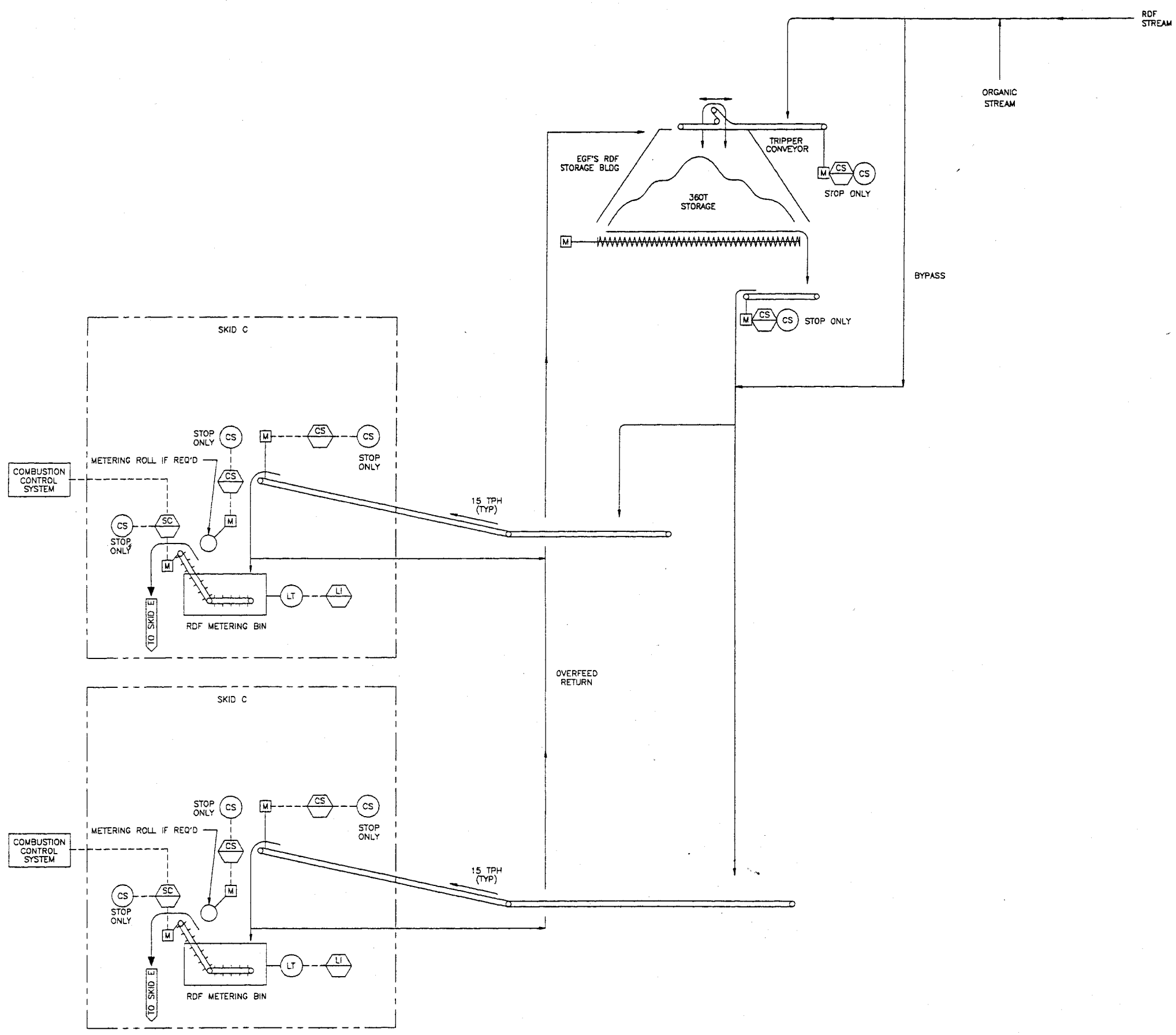

NOTE:

1. ALL FUEL HANDLING AREAS SHALL BE ENCLOSED.
2. AIR SHALL BE DRAWN FROM THE FUEL HANDLING SYSTEM FOR ODOR CONTAINMENT.

PRELIMINARY

No.	Description	By	Date	Appd
F	CONTRACT AWARD	HC	11/23/94	GJC
E	ADDENDUM NO. 1	C.U.	7/29/94	GJC
D	FOR BID	HC	7/15/94	GJC
C	FOR REVIEW	C.U.	6/30/94	GJC
B	FOR REVIEW	HC	6/6/94	GJC
A	FOR REVIEW	HC	5/20/94	GJC

REVISIONS

TRI-MONT Engineering Company
Boston, MA.

CLIENT: WILSON RESOURCES L.P.

PROJECT: WILSON EGF

Title: PROCESS & INSTRUMENTATION DIAGRAM – SKIDS A, B, & C FUEL RECEIVING/STORAGE

TRI-MONT	By	Date	Client	By	Date
Drawn	H. CLEMENS	5/2/94	Approved		
Checked	G. MORIN	5/6/94	Approved		
Approved	G.J. CAHILL	5/6/94	Approved		

Scale:	Job No.	Drawing No.	Rev. No.
NONE		D-071-05-F2	F

12/8/94

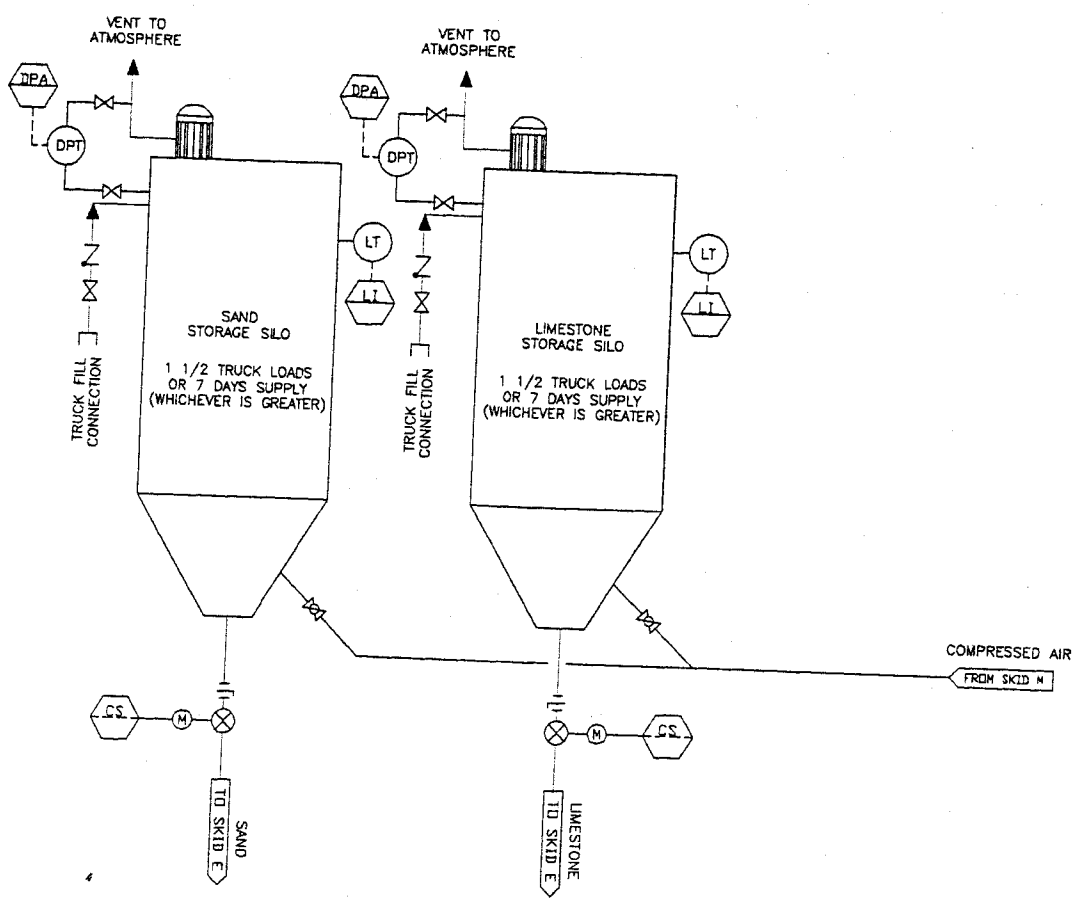

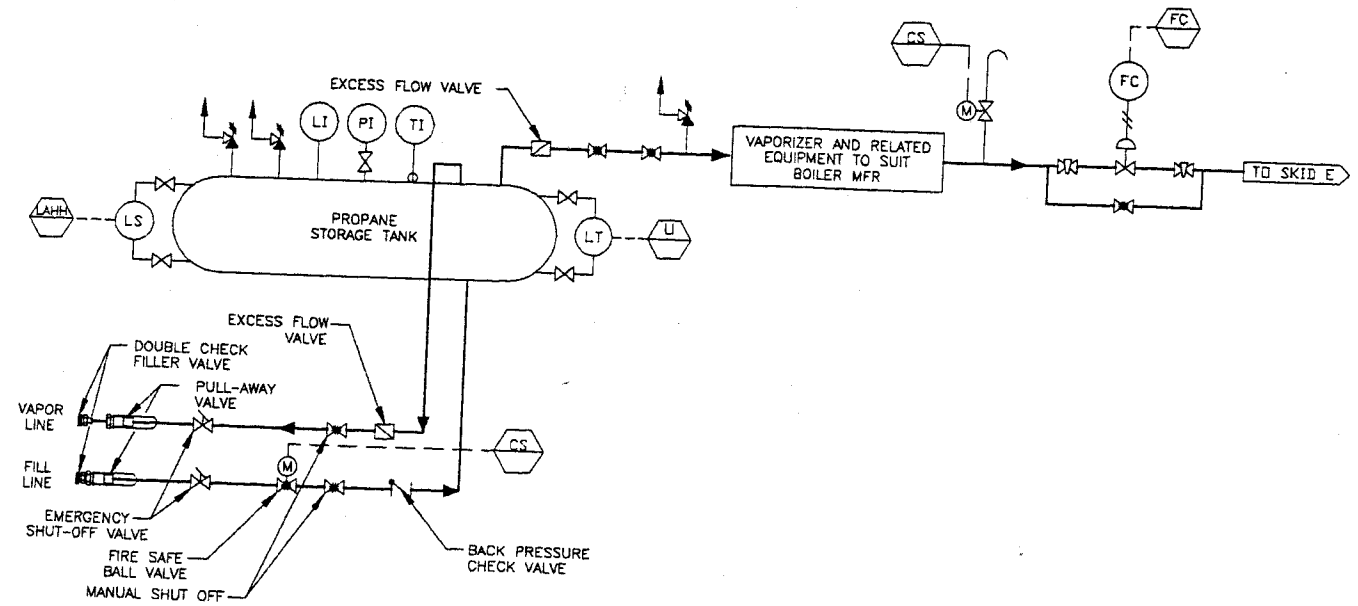

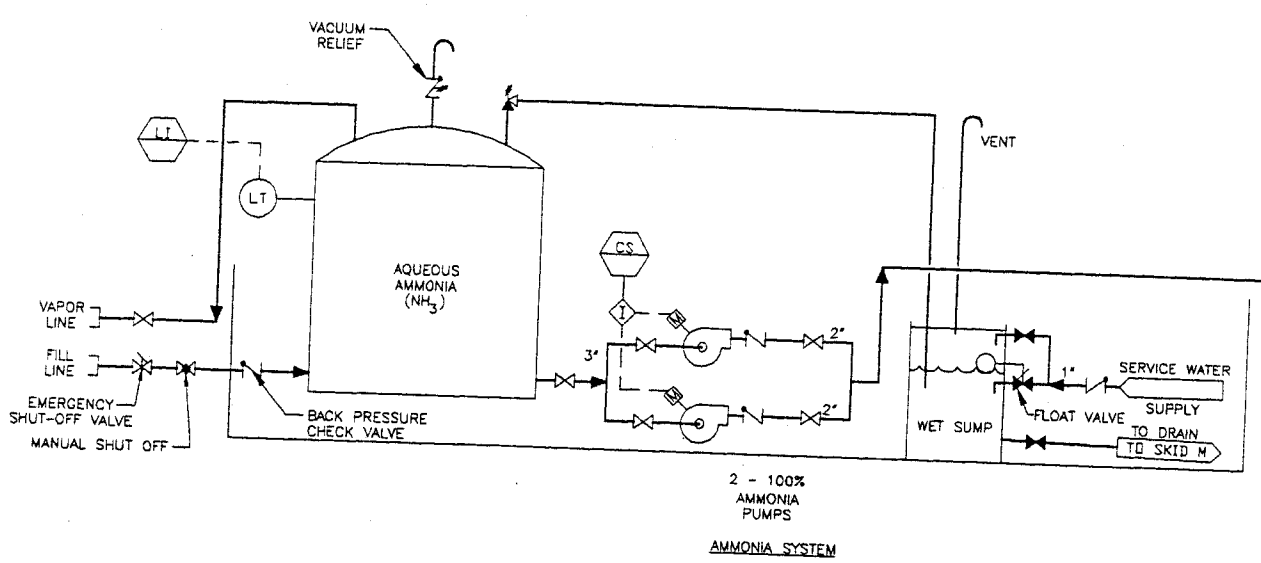

AMMONIA SYSTEM

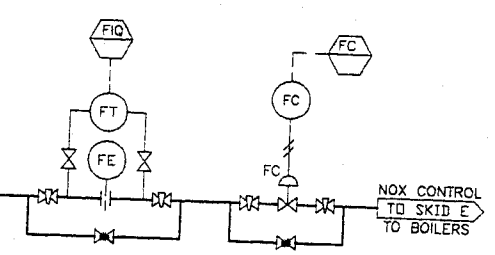

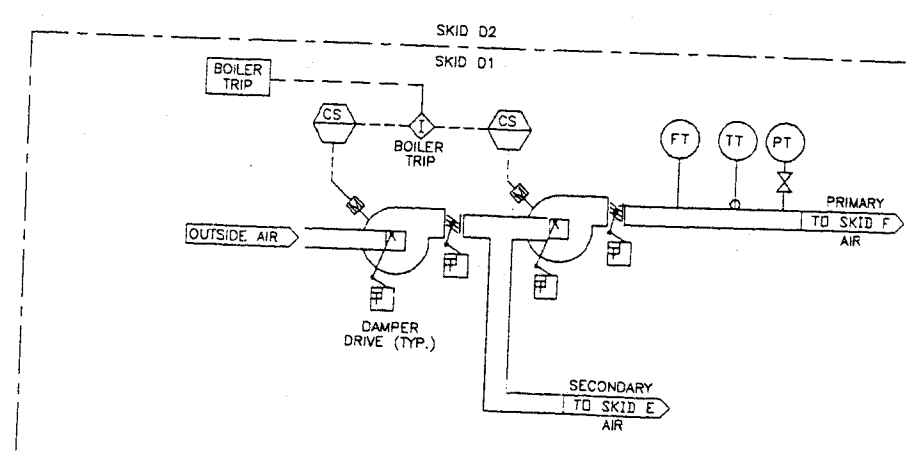

FORCED DRAFT FAN

PRIMARY AIR FAN

EACH MOTOR SHALL BE POWERED FROM EITHER A MOTOR CONTROL CENTER LOCATED ON ITS SKID OR AN INDIVIDUAL MOTOR STARTER.

PRELIMINARY

No.	Description	By	Date	Appd
E	CONTRACT AWARD	MIR	11/23/94	GJC
D	FOR BID	HC	7/15/94	GJC
C	FOR REVIEW	C.U.	6/30/94	GJC
B	FOR REVIEW	HC	6/6/94	GJC
A	FOR REVIEW	HC	5/20/94	GJC

REVISIONS

TRI-MONT Engineering Company
Boston, MA.

CLIENT: WILSON RESOURCES L.P.

PROJECT: WILSON EGF

Title: PIPING & INST. DIAGRAM BOILER AUXILIARIES SKIDS D & P

TRI-MONT	By	Date	Client	By	Date
Drawn	H. CLEMENS	5/11/94	Approved		
Checked	G.J. MORIN	11/15/93	Approved		
Approved	G.J. CAHILL	5/20/94	Approved		

Scale: NONE | Job No. | Drawing No. D-071-05-F3 | Rev. No. F

12/5/94

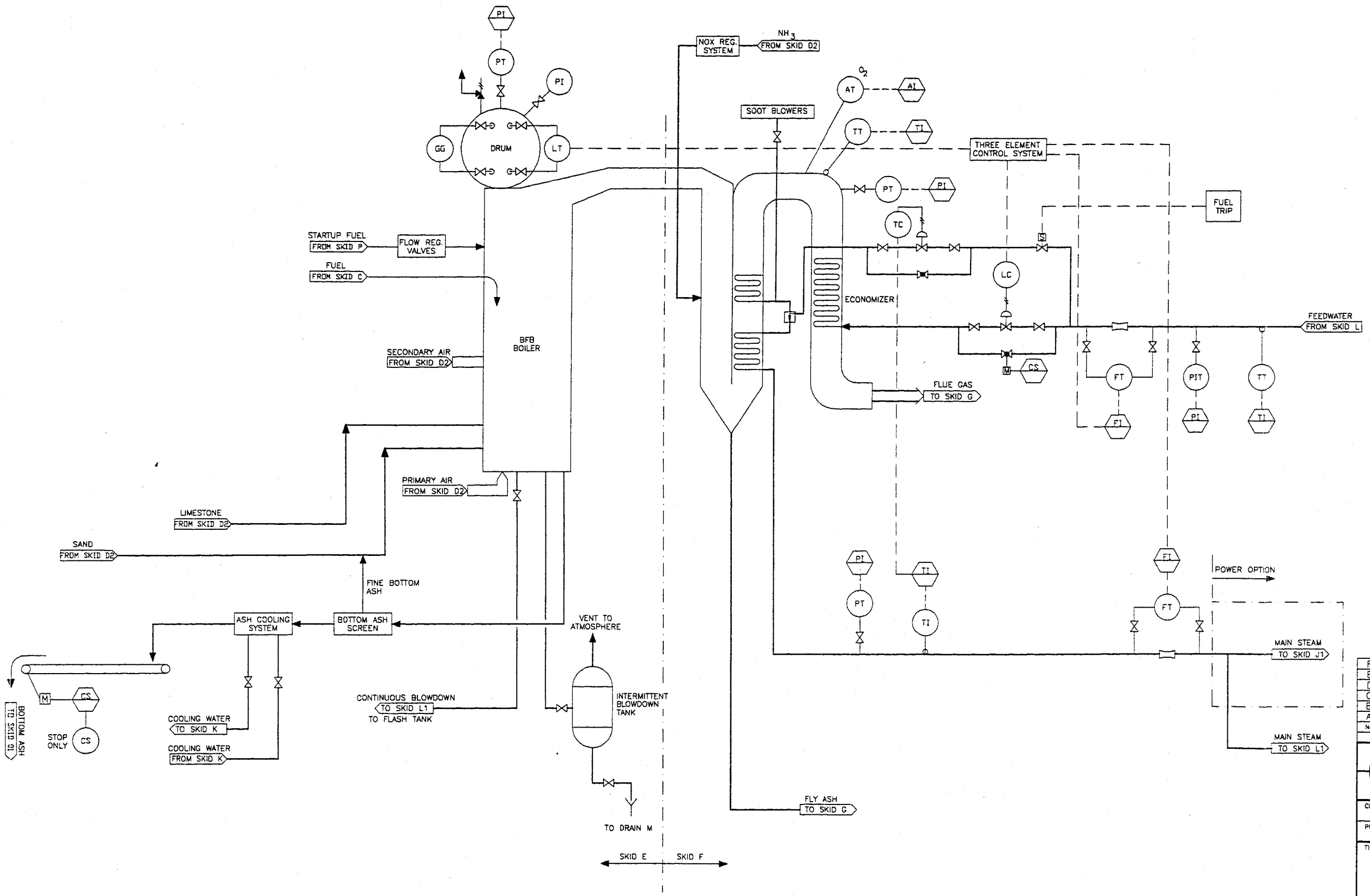

EACH MOTOR SHALL BE POWERED FROM EITHER A MOTOR CONTROL CENTER LOCATED ON ITS SKID OR AN INDIVIDUAL MOTOR STARTER.

PRELIMINARY

No.	Description	By	Date	Appd
F	CONTRACT AWARD	MIR	11/23/94	GJC
E	ADDENDUM NO. 1	C.U.	7/29/94	GJC
D	FOR BID	HC	7/15/94	GJC
C	FOR REVIEW	C.U.	6/30/94	GJC
B	FOR REVIEW	HC	6/6/94	GJC
A	FOR REVIEW	HC	5/20/94	GJC

REVISIONS

TRI-MONT Engineering Company
Boston, MA.

CLIENT: WILSON RESOURCES L.P.

PROJECT: WILSON EGF

Title: PIPING & INSTRUMENTATION DIAGRAM – SKIDS E & F

TRI-MONT	By	Date	Client	By	Date
Drawn	H. CLEMENS	5/12/94	Approved		
Checked	G.J. MORIN	5/13/94	Approved		
Approved	G.J. CAHILL	5/20/94	Approved		

Scale:	Job No.	Drawing No.	Rev. No.
NONE		D-071-05-F4	F

12/8/94

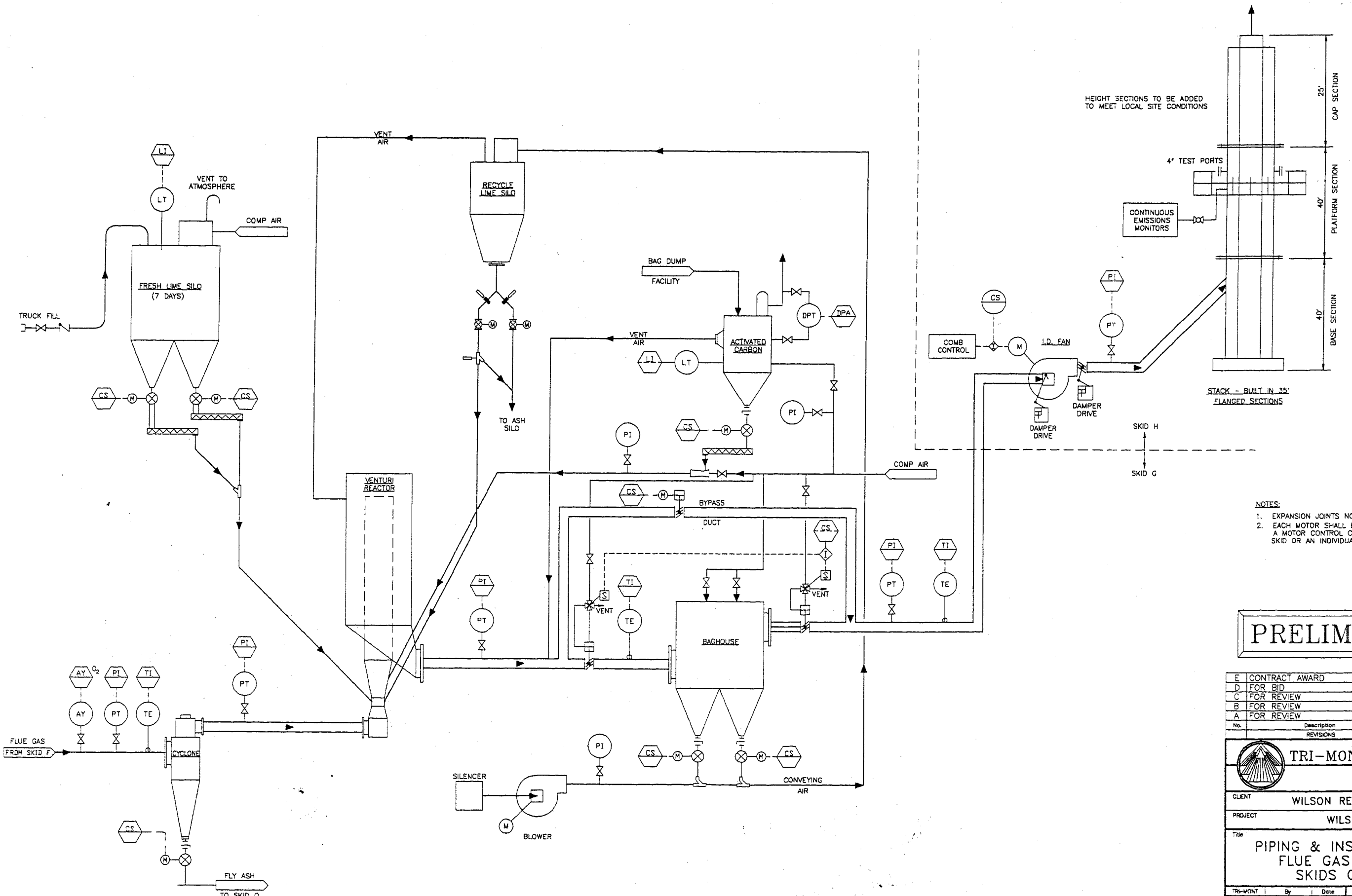

NOTES:

1. EXPANSION JOINTS NOT SHOWN.
2. EACH MOTOR SHALL BE POWERED FROM EITHER A MOTOR CONTROL CENTER LOCATED ON IT'S SKID OR AN INDIVIDUAL MOTOR STARTER.

PRELIMINARY

No.	Description	By	Date	Appd
E	CONTRACT AWARD	HC	11/23/94	GJC
D	FOR BID	HC	7/15/94	GJC
C	FOR REVIEW	C.U.	6/30/94	GJC
B	FOR REVIEW	HC	6/6/94	GJC
A	FOR REVIEW	HC	5/20/94	GJC

REVISIONS

TRI-MONT Engineering Company
Boston, MA.

CLIENT: WILSON RESOURCES L.P.

PROJECT: WILSON EGF

Title: PIPING & INST. DIAGRAM
FLUE GAS SYSTEM
SKIDS G & H

TRI-MONT	By	Date	Client	By	Date
Drawn	H. CLEMENS	5/11/94	Approved		
Checked	G.J. MORIN	5/20/94	Approved		
Approved	G.J. CAHILL	5/20/94	Approved		

Scale:	Job No.	Drawing No.	Rev. No.
NONE		D-071-05-F5	E

12/8/94

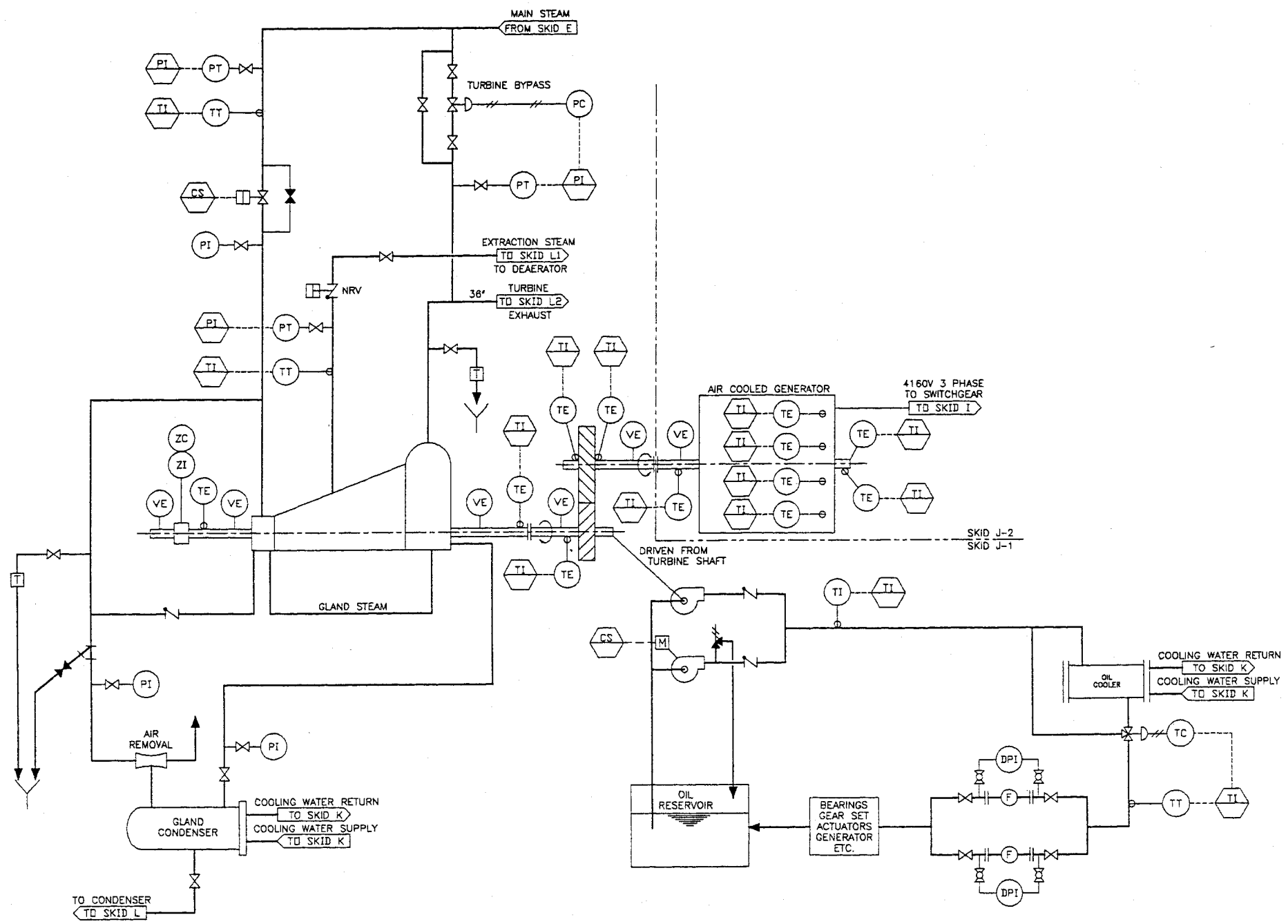

EACH MOTOR SHALL BE POWERED FROM EITHER A MOTOR CONTROL CENTER LOCATED ON ITS SKID OR AN INDIVIDUAL MOTOR STARTER.

PRELIMINARY

No.	Description	By	Date	Appd
E	CONTRACT AWARD	MIR	11/23/94	GJC
D	FOR BID	HC	7/15/94	GJC
C	FOR REVIEW	C.U.	6/30/94	GJC
B	FOR REVIEW	HC	6/6/94	GJC
A	FOR REVIEW	HC	5/20/94	GJC

REVISIONS

TRI-MONT Engineering Company
Boston, MA.

CLIENT: WILSON RESOURCES L.P.

PROJECT: WILSON EGF

Title: PIPING & INSTRUMENTATION DIAGRAM – SKID J TURBINE GENERATOR

TRI-MONT	By	Date	Client	By	Date
Drawn	H. CLEMENS	4/29/94	Approved		
Checked	G.J. MORIN	5/6/94	Approved		
Approved	G.J. CAHILL	5/20/94	Approved		

Scale:	Job No.	Drawing No.	Rev. No.
NONE		D-071-05-F6	E

12/5/94

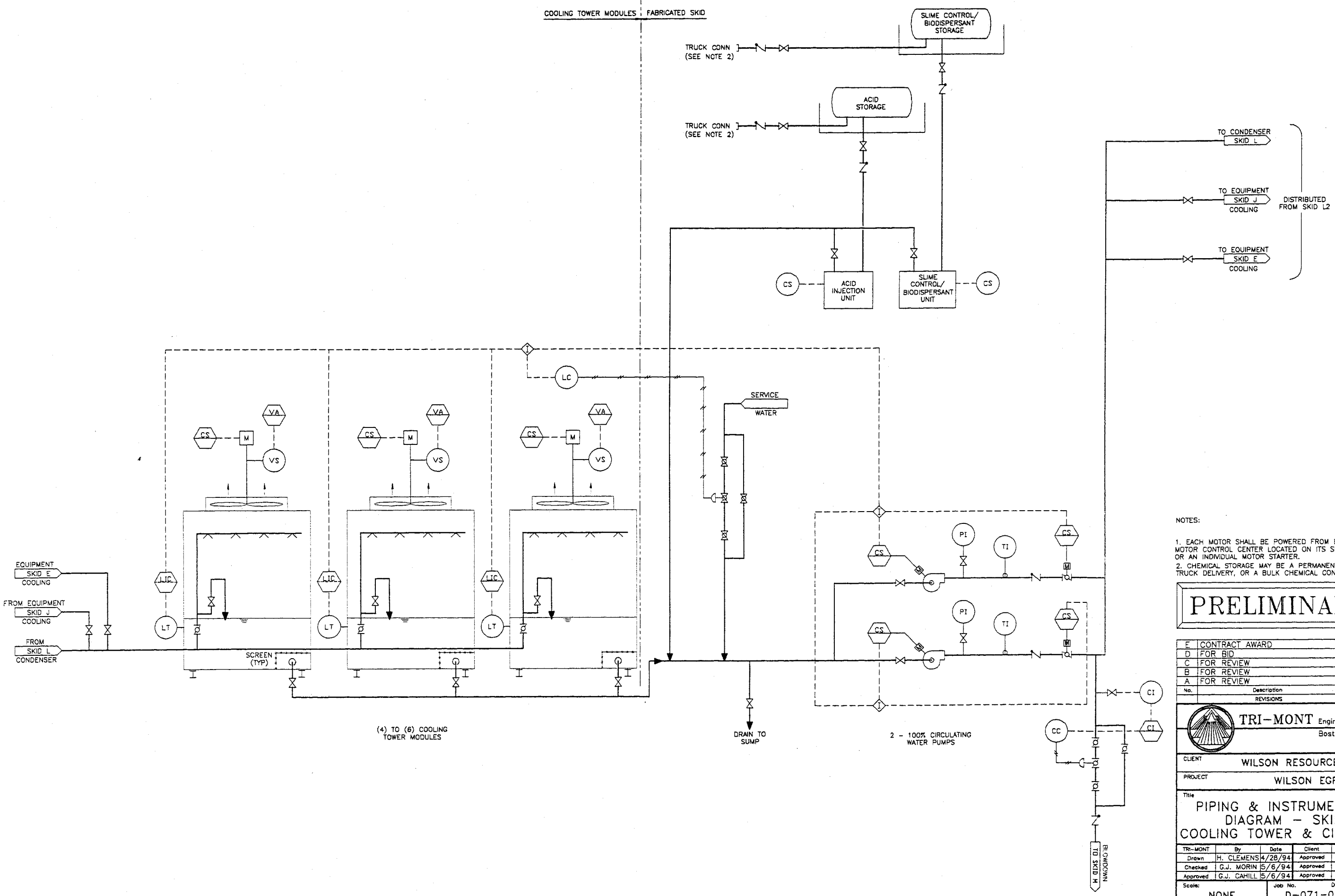

NOTES:

1. EACH MOTOR SHALL BE POWERED FROM EITHER A MOTOR CONTROL CENTER LOCATED ON ITS SKID OR AN INDIVIDUAL MOTOR STARTER.
2. CHEMICAL STORAGE MAY BE A PERMANENT TANK WITH TRUCK DELIVERY, OR A BULK CHEMICAL CONTAINER.

PRELIMINARY

No.	Description	By	Date	Appd
E	CONTRACT AWARD	MIR	11/23/94	GJC
D	FOR BID	HC	7/15/94	GJC
C	FOR REVIEW	C.U.	6/30/94	GJC
B	FOR REVIEW	HC	6/6/94	GJC
A	FOR REVIEW	HC	5/6/94	GJC

REVISIONS

TRI-MONT Engineering Company
Boston, MA.

CLIENT: WILSON RESOURCES L.P.

PROJECT: WILSON EGF

Title: PIPING & INSTRUMENTATION DIAGRAM – SKID K COOLING TOWER & CIRC WATER

TRI-MONT	By	Date	Client	By	Date
Drawn	H. CLEMENS	4/28/94	Approved		
Checked	G.J. MORIN	5/6/94	Approved		
Approved	G.J. CAHILL	5/6/94	Approved		

Scale:	Job No.	Drawing No.	Rev. No.
NONE		D-071-05-F7	E

12/5/94

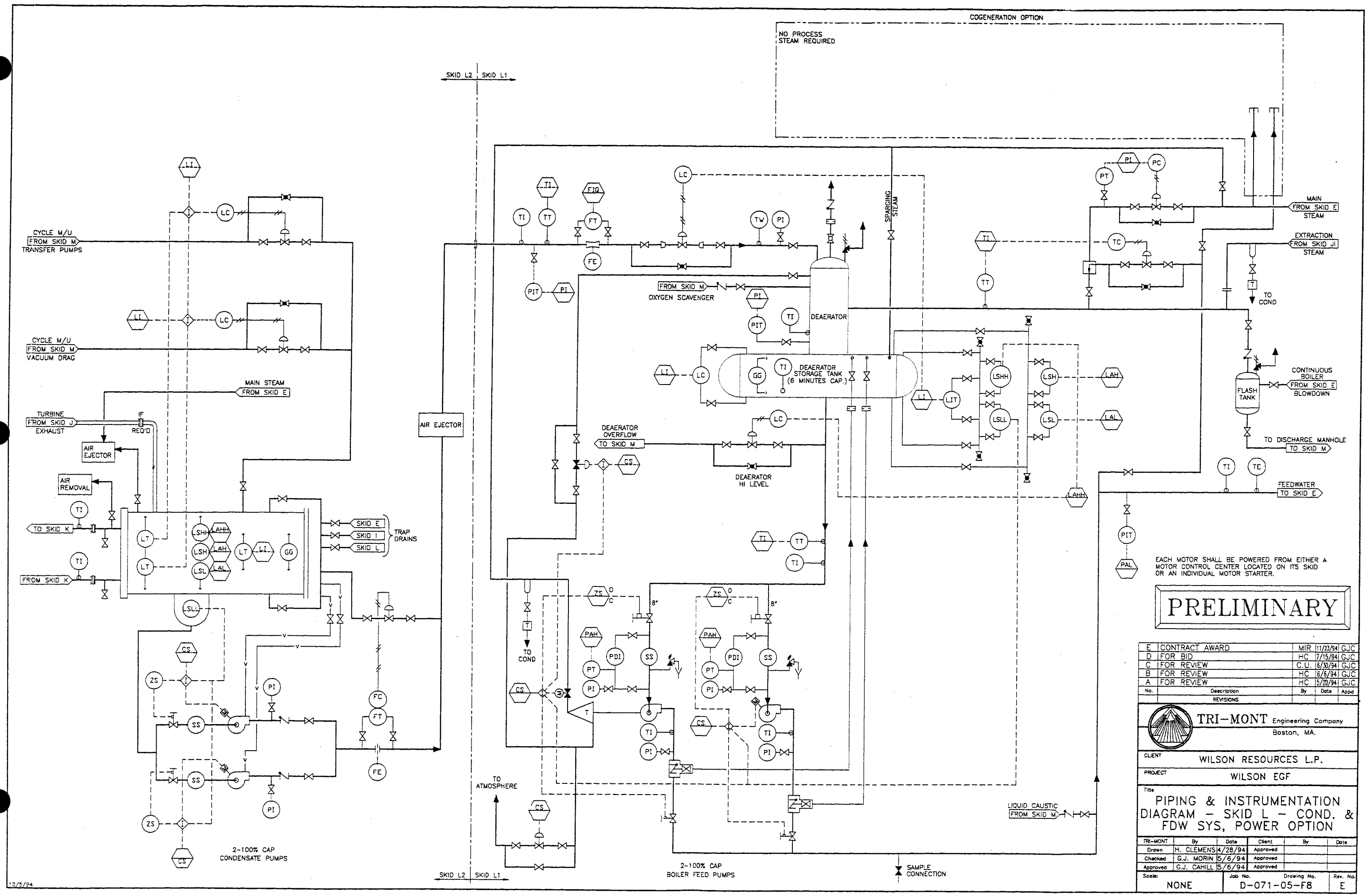

No.	Description	By	Date	Appd
E	CONTRACT AWARD	MIR	11/23/94	GJC
D	FOR BID	HC	7/15/94	GJC
C	FOR REVIEW	C.U.	6/30/94	GJC
B	FOR REVIEW	HC	6/6/94	GJC
A	FOR REVIEW	HC	5/20/94	GJC

REVISIONS

TRI-MONT Engineering Company
Boston, MA.

CLIENT: WILSON RESOURCES L.P.

PROJECT: WILSON EGF

Title: PIPING & INSTRUMENTATION DIAGRAM – SKID L – COND. & FDW SYS, POWER OPTION

TRI-MONT	By	Date	Client	By	Date
Drawn	H. CLEMENS	4/28/94	Approved		
Checked	G.J. MORIN	5/6/94	Approved		
Approved	G.J. CAHILL	5/6/94	Approved		

Scale:	Job No.	Drawing No.	Rev. No.
NONE	D-071-05-F8		E

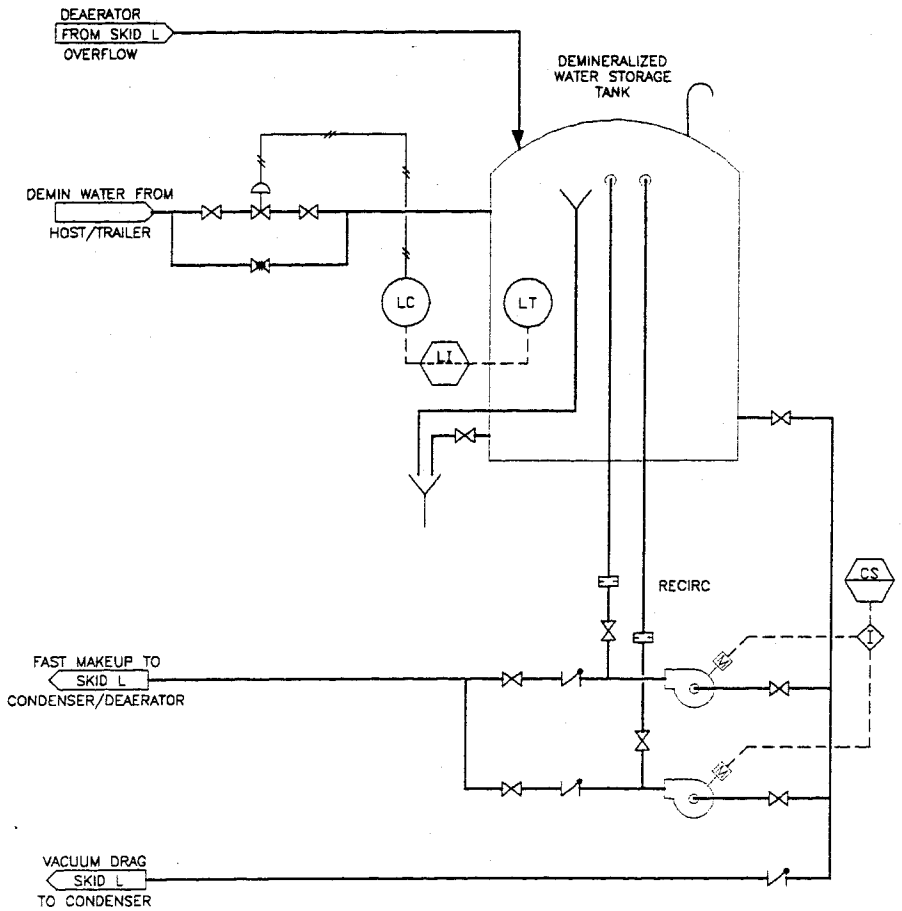

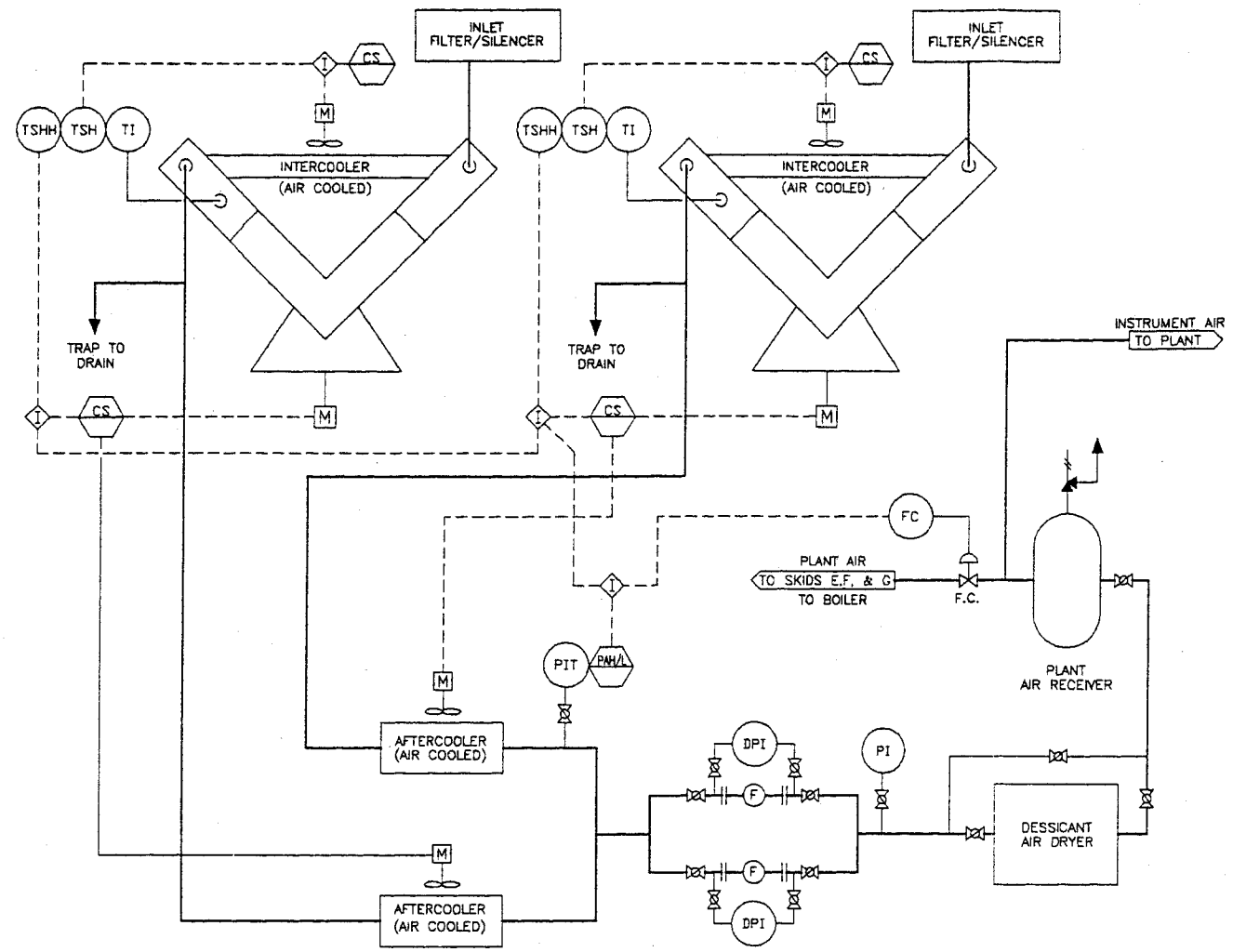

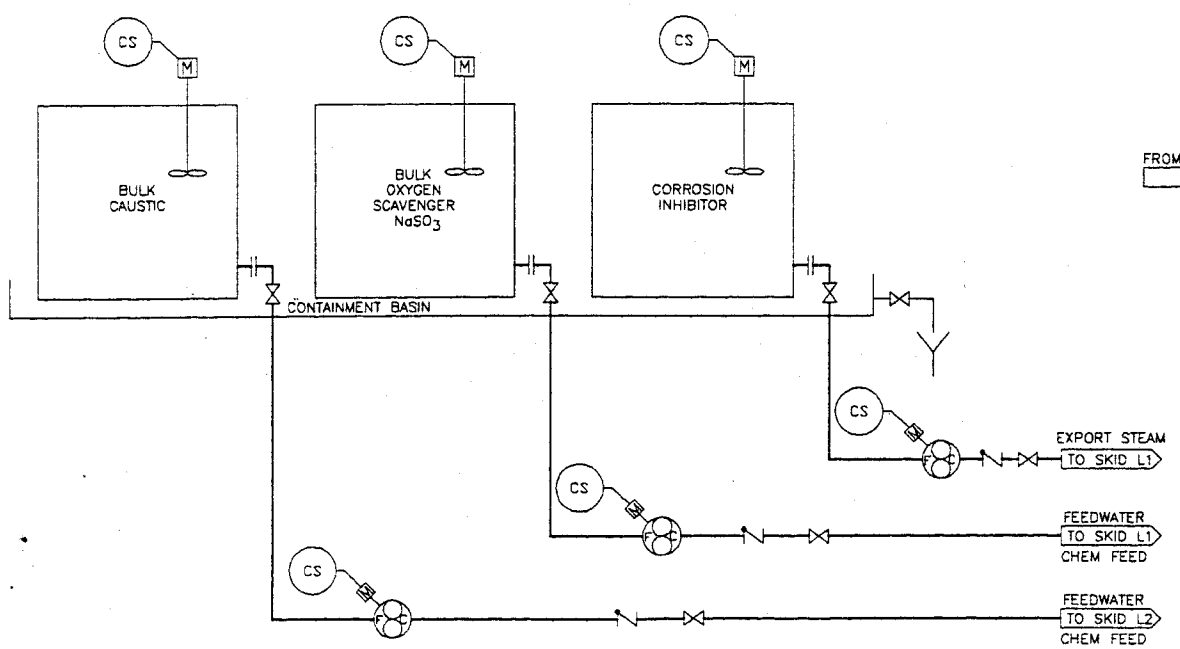

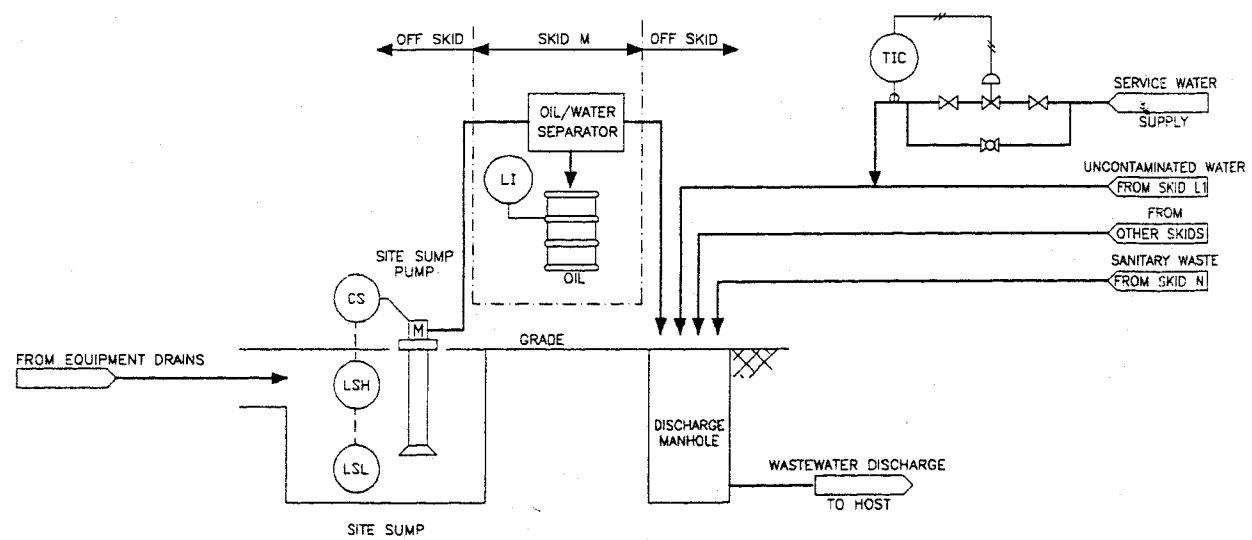

EACH MOTOR SHALL BE POWERED FROM EITHER A MOTOR CONTROL CENTER LOCATED ON ITS SKID OR AN INDIVIDUAL MOTOR STARTER.

PRELIMINARY

No.	Description	By	Date	Appd
E	CONTRACT AWARD	MIR	11/23/94	GJC
D	FOR BID	HC	7/15/94	GJC
C	FOR REVIEW	C.U.	6/30/94	GJC
B	FOR REVIEW	HC	6/6/94	GJC
A	FOR REVIEW	HC	5/20/94	GJC

REVISIONS

TRI-MONT Engineering Company
Boston, MA

CLIENT: WILSON RESOURCES L.P.

PROJECT: WILSON EGF

Title: PIPING & INSTRUMENTATION DIAGRAM – SKID M MISCELLANEOUS SKID

TRI-MONT	By	Date	Client	By	Date
Drawn	H. CLEMENS	4/29/94	Approved		
Checked	G.J. MORIN	5/6/94	Approved		
Approved	G.J. CAHILL	5/6/94	Approved		

Scale: NONE | Job No. | Drawing No. D-071-05-F9 | Rev. No. E

12/8/94

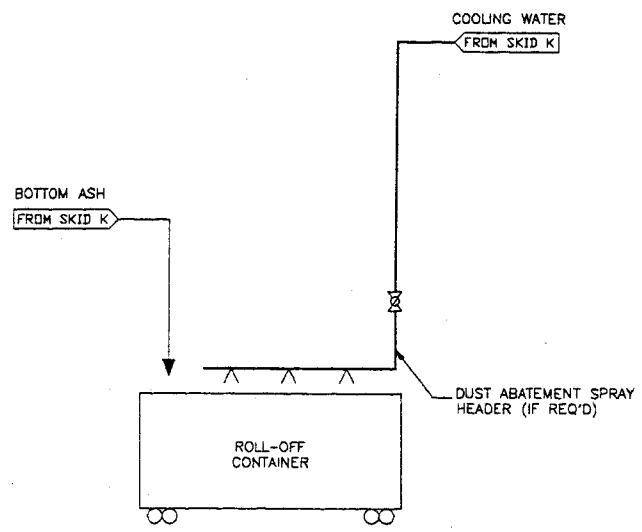

SKID 01
BOTTOM ASH DISPOSAL SYSTEM

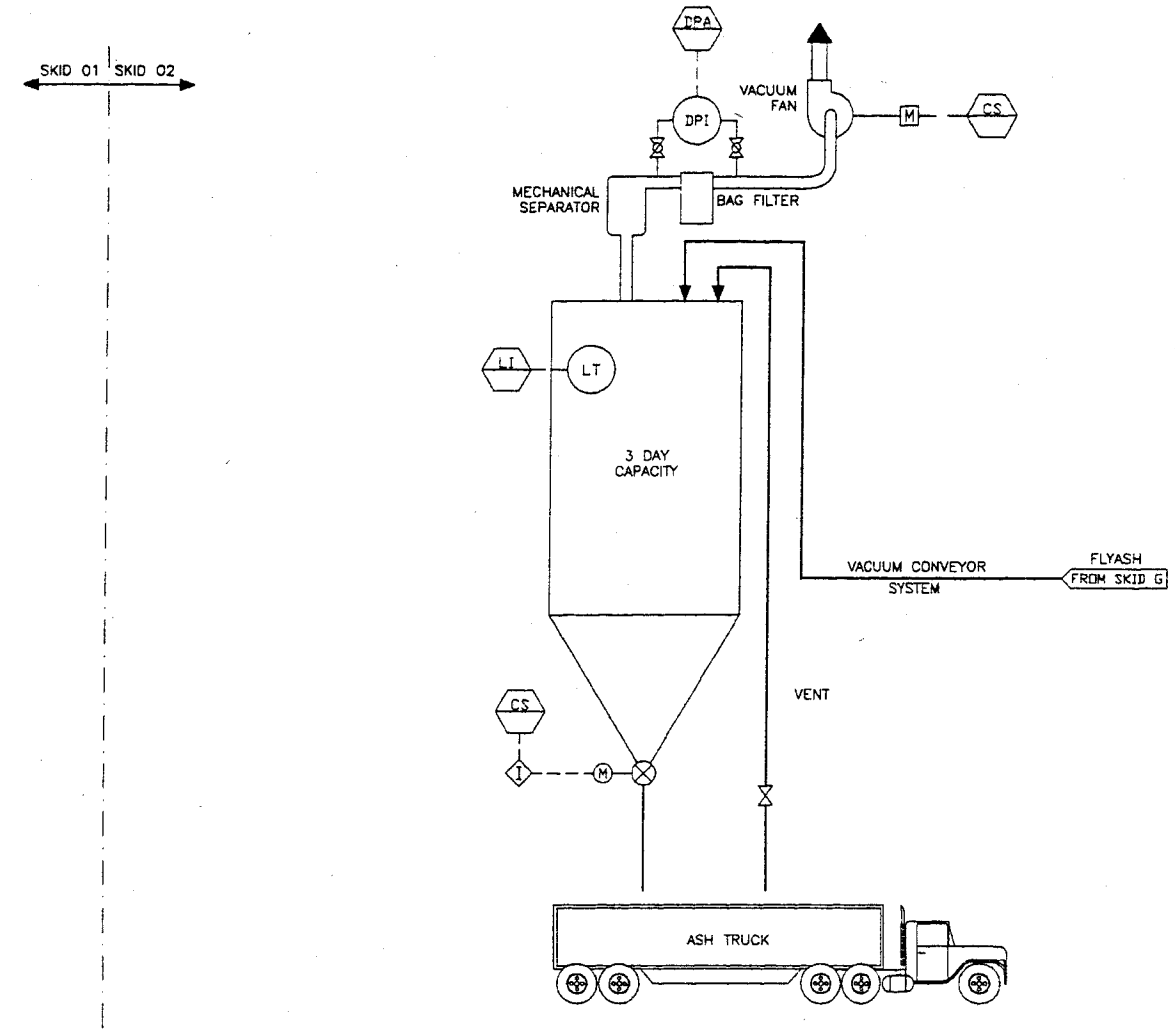

SKID 02
FLY ASH DISPOSAL SYSTEM

PRELIMINARY

No.	Description	By	Date	Appd
D	CONTRACT AWARD	MIR	11/23/94	GJC
C	FOR BID	HC	7/15/94	GJC
B	FOR REVIEW	C.U.	6/30/94	GJC
A	FOR REVIEW	HC	6/7/94	GJC

REVISIONS

TRI-MONT Engineering Company
Boston, MA.

CLIENT: WILSON RESOURCES L.P.

PROJECT: WILSON EGF

Title: PROCESS & INSTRUMENTATION DIAGRAM – SKID O ASH HANDLING SYSTEM

TRI-MONT	By	Date	Client	By	Date
Drawn	H. CLEMENS	6/7/94	Approved		
Checked	G.J. MORIN	6/7/94	Approved		
Approved	G.J. CAHILL	6/6/94	Approved		

Scale:	Job No.	Drawing No.	Rev. No.
NONE	071-05-F10		D

12/5/94

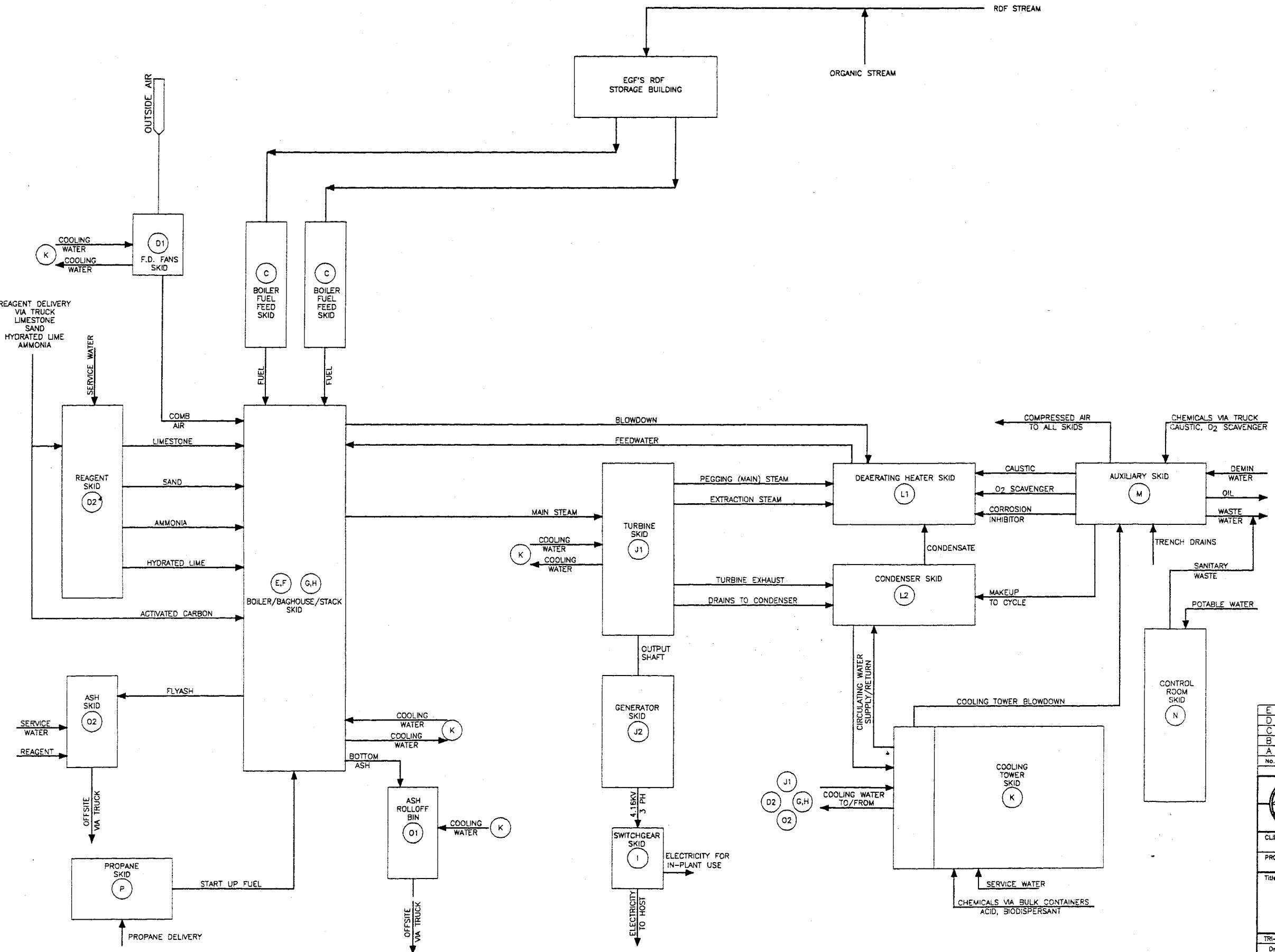

No.	Description	By	Date	Appd
E	CONTRACT AWARD	HC	11/23/94	GJC
D	ADDENDUM NO. 1	C.U.	7/25/94	GJC
C	FOR BID	HC	7/15/94	GJC
B	FOR REVIEW	HC	6/20/94	GJC
A	FOR REVIEW	HC	5/20/94	GJC

REVISIONS

TRI-MONT Engineering Company
Boston, MA.

CLIENT: WILSON RESOURCES L.P.

PROJECT: WILSON EGF

Title: PIPING SKID INTERCONNECTION DIAGRAM POWER OPTION

TRI-MONT	By	Date	Client	By	Date
Drawn	H. CLEMENS	5/13/94	Approved		
Checked	G.J. MORIN	5/16/94	Approved		
Approved	G.J. CAHILL	5/20/94	Approved		

Scale:	Job No.	Drawing No.	Rev. No.
NONE		D-071-05-F11	E

12/8/94

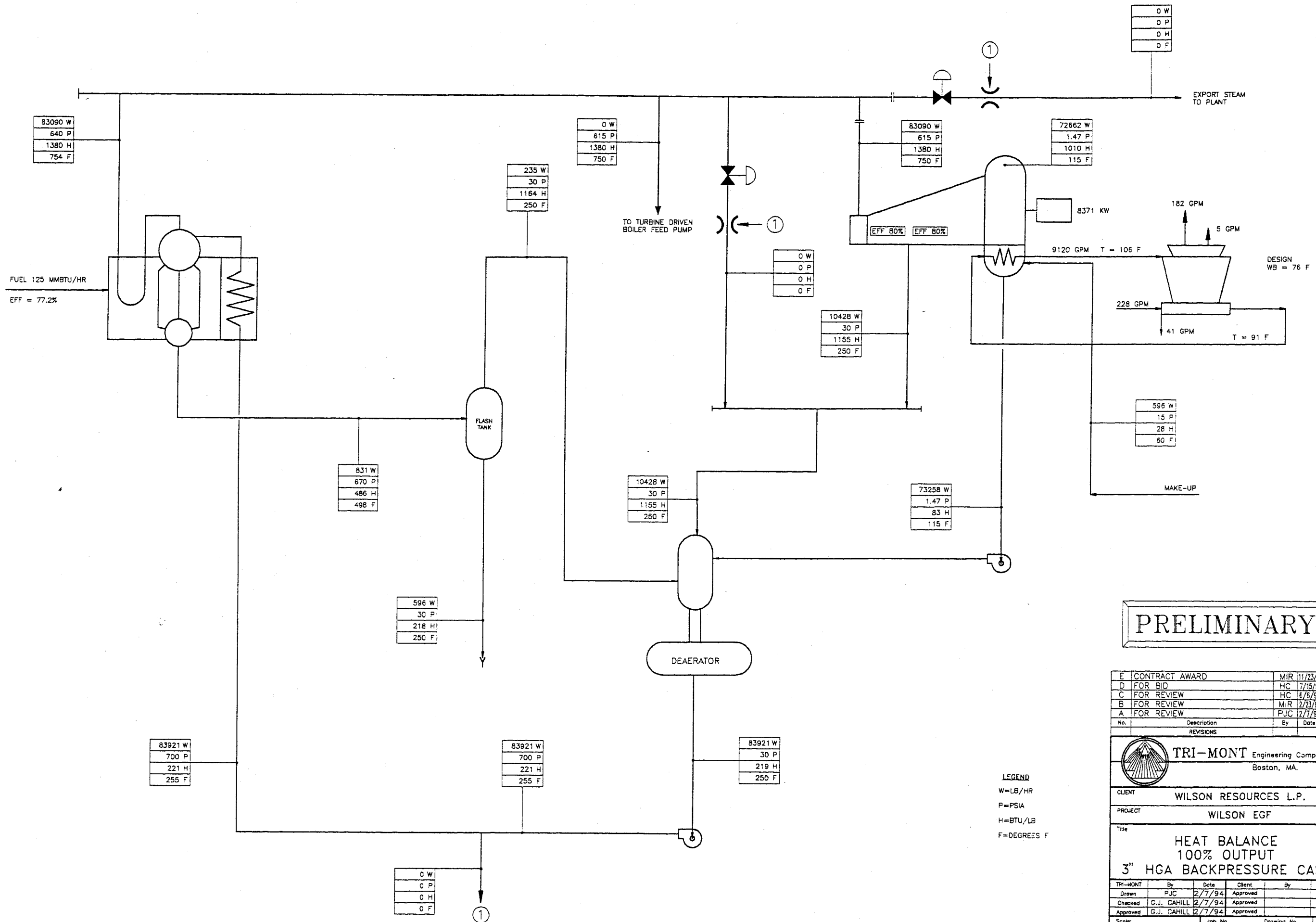

PRELIMINARY

LEGEND
W=LB/HR
P=PSIA
H=BTU/LB
F=DEGREES F

No.	Description	By	Date	Appd
E	CONTRACT AWARD	MIR	11/23/94	GJC
D	FOR BID	HC	7/15/94	GJC
C	FOR REVIEW	HC	6/6/94	GJC
B	FOR REVIEW	MIR	2/23/94	GJC
A	FOR REVIEW	PJC	2/7/94	GJC

REVISIONS

TRI-MONT Engineering Company
Boston, MA.

CLIENT: WILSON RESOURCES L.P.

PROJECT: WILSON EGF

Title: HEAT BALANCE
100% OUTPUT
3" HGA BACKPRESSURE CASE

TRI-MONT	By	Date	Client	By	Date
Drawn	PJC	2/7/94	Approved		
Checked	G.J. CAHILL	2/7/94	Approved		
Approved	G.J. CAHILL	2/7/94	Approved		

Scale:	Job No.	Drawing No.	Rev. No.
NONE		D-071-05-M9	E

12/5/94

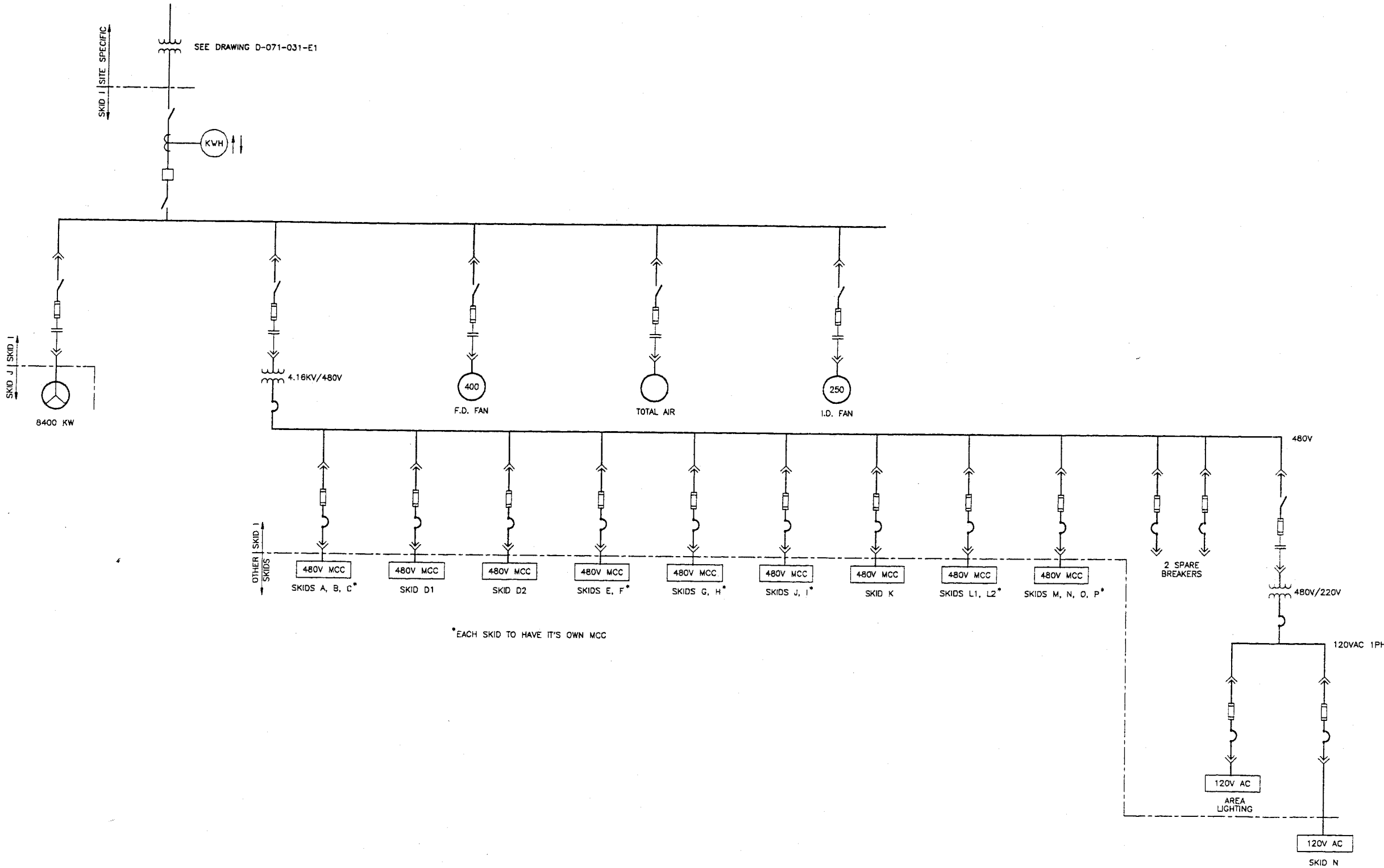

NOTE: THIS DRAWING SHALL REPRESENT A "BASE" OFFERING. DESIGN OF THIS SKID WILL BE HIGHLY APPLICATION DEPENDANT AS EQUIPMENT AND AVAILABLE VOLTAGE WILL VARY.

PRELIMINARY

No.	Description	By	Date	Appd
E	CONTRACT AWARD	HC	11/23/94	GJC
D	FOR BID	HC	7/15/94	GJC
C	FOR REVIEW	HC	6/30/94	GJC
B	FOR REVIEW	C.U.	6/29/94	GJC
A	FOR REVIEW	HC	6/2/94	GJC

REVISIONS

TRI-MONT Engineering Company
Boston, MA.

CLIENT: WILSON RESOURCES L.P.

PROJECT: WILSON EGF

Title: SKID I
ONE LINE DIAGRAM
POWER OPTION

TRI-MONT	By	Date	Client	By	Date
Drawn	H. CLEMENS	6/2/94	Approved		
Checked	G.J. MORIN	6/6/94	Approved		
Approved	G.J. CAHILL	6/6/94	Approved		

Scale:	Job No.	Drawing No.	Rev. No.
NONE		D-071-05-E1	E

12/2/94

Section 6

AIR PERMIT APPLICATION

FOR

CAROLINA ENERGY, L.P.

MIXED WASTE PROCESSING FACILITY

AND

RDF-TO-ENERGY FACILITY

WILSON COUNTY, NORTH CAROLINA

AUGUST 1994

SUBMITTED TO:

STATE OF NORTH CAROLINA
DEPARTMENT OF ENVIRONMENT, HEALTH AND NATURAL RESOURCES
DIVISION OF ENVIRONMENTAL MANAGEMENT
AIR QUALITY SECTION
AIR PERMITS UNIT
P.O. BOX 29535
RALEIGH, NORTH CAROLINA 27626-0535

PREPARED BY:

KENNETH L. WOODRUFF & ASSOCIATES
RESOURCE RECOVERY CONSULTANTS
P.O. BOX 42
MORRISVILLE, PENNSYLVANIA 19067-0042
215-736-2194

1.0 INTRODUCTION

1.1 Project Description

Carolina Energy, L.P. plans to construct and operate a facility in Wilson County, NC to accept and process approximately 400,000 tons per year of municipal solid waste (MSW) for the recovery of ferrous metals, aluminum, newspaper, corrugated cardboard, various plastics and an aggregate product. Refuse-derived fuel (RDF-3) will be produced for boiler fuel. A portion of the RDF-3, approximately 95,000 tons per year, will be burned on-site for the production of steam and electricity. The balance of the RDF-3, approximately 190,000 tons per year, will be transported to the Carolina Energy, L.P. Facility (EGF) to be located in Kinston, Lenoir County, where it will be combusted to produce steam for sale to the DuPont Kinston Works. The Lenoir County EGF was issued Air Permit No. 7737 on June 6, 1994.

Ferrous metals and white goods (appliances) recovered from the waste stream will also be processed on-site utilizing a metals shredding system for the production of high quality shredded steel scrap.

The facility is to be located at 3031 Black Creek Road, S.E., Wilson, North Carolina.

2.0 GENERAL SOURCE DESCRIPTION

2.1 Facility Description

The proposed Carolina Energy, L.P. Facility incorporates three (3) operations as follows:

1. Materials Recovery Facility (MRF)
2. Energy Generation Facility (EGF)
3. Metals Shredding Facility (MSF)

The facility will receive municipal solid waste (MSW) from Pitt, Lenoir, Wilson, Edgecombe and Nash Counties. The MRF will process the MSW to recover paper, metals and plastics, as well as an aggregate product. A specification fuel product will be produced. This shredded fuel product known as RDF-3 is defined by American Society for Testing and Materials (ASTM) designation E1126-87 as shredded fuel derived from municipal solid waste that has been processed to remove metal, glass, and other inorganics for recycling and which has a particle size such that 95 percent by weight of the material will pass through a two-inch square mesh screen. It is estimated that the RDF-3 will consist of approximately 65 percent (by weight) paper and paper products, less than 15 percent rubber and plastics, 5 percent wood and textiles, and 15 percent non-combustibles on a dry weight basis. Moisture content is expected to be approximately 20 percent by weight.

A portion of the RDF-3 will be burned at the on-site EGF to generate steam and electricity for in-plant use. The bulk of the RDF-3 will be trucked to the Carolina Energy, L.P. Lenoir County Facility to be located adjacent to the DuPont Kinston works where it will be burned to generate steam.

The Metals Shredding Facility (MSF) will process all ferrous metal scrap recovered at the on-site MRF, as well as ferrous scrap recovered at the BCH Energy, L.P. MRF Facility located in Fayetteville, Cumberland County, NC. In addition, bulky

aluminum scrap recovered at the MRF facilities will be processed to produce a high quality product to be sold to the secondary aluminum industry.

2.1.1 Process and Control Equipment

Materials Recovery Facility (MRF)

The materials recovery facility will utilize two (2) fabric filter dust collection systems for particulate emissions control. One (1) dust collection system will control particulate emissions from the two (2) MSW processing lines, including the trommel screening operations and conveyor transfer points. The glass/aggregate processing system will utilize a fabric filter to control emissions from the processing and handling of the minus 2-inch MSW fraction which will be processed for aggregate recovery. Potential emissions from the two (2) RDF-3 shredders and downstream RDF compaction systems will be controlled by the MRF air handling systems which also provides combustion air to the two (2) circulating fluidized bed (CFB) combustors, as discussed below.

Energy Generation Facility (EGF)

The RDF-3 will be stored in live bottom bins which vent directly into the on-site combustion units. Consequently, fugitive emissions should not occur from the RDF-3 storage bins. The RDF-3 will be moved from the storage bins to enclosed metering bins by covered conveyors, which according to the construction plan, will be under negative pressure caused by the ventilation of the storage bins. Therefore, the conveyors should not be a source of fugitive air pollutant emissions.

Upon reaching the enclosed metering bins, the RDF-3 will be fed via enclosed conveyor system (mechanical or pneumatic) to the combustors. The metering bins will also be under negative pressure and will not be a source of fugitive air pollutant emissions. Consequently, because the entire fuel feed system is under negative pressure, no fugitive emissions to the atmosphere are expected from the RDF shredding, storage, handling and feeding systems.

Two (2) circulating fluidized bed combustors will be used to burn the RDF-3 on-site. The combustors will be provided by Kvaerner Environmental Technologies, Inc.,

a subsidiary of Kvaerner EnviroPower AB of Sweden. Each combustor will have a capacity of approximately 47,500 tons of RDF-3 per year, assuming an average heating value of 5,500 BTU's per pound. Heating value of the RDF-3 is expected to range from 5,000 to 6,000 BTU's per pound. Each combustor will be rated at 62.5 million British Thermal Units (MMBtu) per hour heat input.

To control sulfur dioxide emissions, powdered limestone will be fed into each combustor via a separate pneumatic feedline. Aqueous ammonia will be injected into the fluidized bed combustors to control nitrogen oxide (NOx) emissions. The hot gas from each fluidized bed combustor will pass through a boiler unit to create steam. Each boiler is to have a rated output capacity of 50 MMBtu per hour and 44,000 pounds of steam per hour. Each boiler will consist of a superheater, an evaporator and an economizer. Hydrated lime will be injected into the process stream to control acid gas emissions, primarily hydrochloric acid (HCl). Activated carbon will be injected to assure control of toxic organic emissions and mercury. Multi-cyclones followed by fabric filters (baghouses) will be used to control particulate emissions. The remaining exhaust gas emissions will be vented through the process exhaust stack for each unit.

The on-site EGF will have seven (7) emission points for criteria and/or toxic air pollutant emissions as follows:

1. CFB Boiler Stack No. 1
2. CFB Boiler Stack No. 2
3. Powdered Limestone Storage Bin
4. Sand Silo
5. Hydrated Lime Storage Bin
6. Ash Storage Bin
7. Aqueous Ammonia Storage Bin

All solids storage bins/silos will be equipped with fabric filter bin vents to control particulate emissions

Metals Shredding Facility (MSF)

The metals shredding facility consists of a hammermill shredder followed by an air density separation system and magnetic separators to produce high quality specification scrap metal outputs. Products will include shredded steel scrap, municipal shredded scrap, shredded aluminum scrap and mixed non-ferrous scrap.

The hammermill shredder will be equipped with a steam injection system for particulate emissions control. A single point source of particulate emissions will be the air bleed-off from the air density (cascade) separation system. The air density (cascade) separation system separates light material from the shredded scrap and pneumatically conveys it to a high efficiency cyclone separator for de-entrainment. The air stream is recirculated back to the cascade separator, however, to maintain system balance, 10 to 15 percent of the air stream will be bled off to a high energy Venturi scrubber for treatment prior to being exhausted to atmosphere.

3.0 SPECIFIC SOURCE/CONTROL DETAILS

3.1 MRF Sources

The MRF will utilize two (2) control devices; Process Filter No. 1 and Process Filter No. 2. Process Filter No. 1 is a fabric filter baghouse which handles 30,000 acfm discharging through a 125 foot high, 3.5 feet diameter exhaust stack. Process Filter No. 2 is a fabric filter baghouse which handles 20,000 acfm discharging through a 125 foot high, 2.75 feet diameter exhaust stack. Emissions are guaranteed to be less than 0.007 grains/dscf by the vendor. Control efficiency is 99.9 percent. Process Filter No. 1 and No. 2 are limited to 16 hours per day operation, or a maximum combined operation of 32 hours in a 24 hour period.

3.2 EGF Sources

The EGF has a total of seven (7) sources of potential air pollutant emissions as outlined previously. A more detailed description follows:

<u>CFB Stack No. 1 and CFB Stack No. 2</u>

Each stack is 175 feet in height. Exit temperature of stack gases will be 300F. Exit velocity is estimated to be 2546.5 feet per minuts (42.4 fps).

As indicated previously, pulverized limestone injection, ammonia injection, activated carbon injection, hydrated lime injection and fabric filter baghouses provide for control of criteria pollutants and toxic pollutants in accordance with North Carolina and Federal NSPS for Municipal Waste Combustors.

Particulate emissions will be controlled to less than 0.01 grains per dry standard cubic foot or less than 22 mg per dry standard cubic meter, amounting to not more than 2.6 pounds per hour, per unit (11.39 tons per year total for both units).

Volatile organic compounds, expressed as non-methane hydrocarbons will be limited to no more than 3.76 pounds per hour (16.47 tons per year) for the two stacks combined. Since this category of pollutants is incorporated in the toxic air pollutants

regulated by the NC DEHNR, Division of Environmental Management, Toxic Air Pollutant Modeling and Analysis has been conducted for the entire Wilson Facility. A complete report on air toxics, as well as criteria pollutant modeling is included in Section 3 of this application document. Compliance will be demonstrated through annual stack testing as required under North Carolina Regulations and the U.S. EPA New Source Performance Standards (NSPS) for Municipal Waste Combustors.

Sulfur dioxide emissions are expected to be less than 7 percent of potential uncontrolled emissions, or 20 ppmv, amounting to not more than 38.54 tons per year from the two units combined. Compliance will be demonstrated by the use of continuous emissions monitoring of the stack gases. Dry limestone (pulverized to minus 10 mesh) and hydrated lime injection will be used to control sulfur dioxide emissions, as well as hydrogen chloride emissions.

Nitrogen oxides are expected to be less than 36 ppmv amounting to not more than 49.23 tons per year for the two units combined. Aqueous ammonia injection will be used to control NOx emissions. Compliance will be demonstrated by continuous emissions monitoring of effluent gases.

Carbon monoxide emissions are expected to be less than 60 ppmv, amounting to not more than 49.23 tons per year from the two units combined. Compliance will be demonstrated by continuous emissions monitoring of stack gases.

Powdered Limestone Storage Bin

As discussed previously, pulverized limestone will be injected to control sulfur dioxide emissions. The powdered limestone will be stored in a 1,400 cubic foot, 45-foot tall storage bin, and fed into the fluidized bed combustor on a continuous basis. The storage bin will be fitted with a fabric filter (baghouse), approximately three feet square by seven feet tall, with a vent outlet diameter of 0.5 feet. The emission point will be at the top of the baghouse vent, located approximately 52 feet above the ground. Particulate emissions from this storage bin will only occur during pneumatic loading of limestone into the bin (one-half hour 300 times per year or approximately 150 hours per year), and not

while the limestone is being fed into the combustor. Particulate emissions are controlled to 0.007 grains/dscf, or a maximum of 0.035 pounds per hour.

Sand Silo

Sand is utilized as the bed media for the CFB combustors. Make-up sand is to be stored in a 1,400 cubic foot, 45-foot tall storage silo and fed into the combustors on a continuous basis. The sand silo will be fitted with a fabric filter (baghouse), approximately three feet square by seven feet tall, with an outlet diameter of 0.5 feet. The emission point from the silo will be at the top of the baghouse vent, located approximately 52 feet above the ground. Particulate emissions will only occur during pneumatic loading of the sand into the silo (one-half hour 300 times per year or approximately 150 hours per year). Particulate emissions are controlled to 0.007 grains/dscf, or a maximum of 0.035 pounds per hour.

Hydrated Lime Storage Bin

The hydrated lime, used to control acid gas emissions (sulfur dioxide and hydrogen chloride), will be stored in a 1,400 cubic foot, 45-foot tall storage bin and fed into the flue gas cleaning system on a continuous basis. The storage bin will be fitted with a fabric filter (baghouse), approximately three feet square by seven feet tall, with an outlet diameter of 0.5 feet. The emission point will be at the top of the baghouse vent, approximately 52 feet above the ground. Particulate emissions from the storage bin will occur during pneumatic loading of hydrated lime into the bin (approximately one-half hour 76 times per year or 38 hours per year), and not while the lime is being fed into the flue gas system. Particulate emissions are controlled to 0.007 grains/dscf, or a maximum of 0.035 pounds per hour.

Ash Storage Bin

Combustion ash will be collected from the combustion system multi-cyclones and fabric filters (baghouses) located in the process exhaust stream on a continuous basis. The ash will be stored in a 4,000 cubic foot, 50 foot tall storage bin. The bin will be fitted with its own fabric filter (baghouse) approximately three feet square by seven feet tall, with an outlet diameter of 0.5 feet. The emission point will be at the top of the baghouse vent,

located approximately 57 feet above the ground. Particulate emissions from the bin will occur continuously, since the ash will be continuously removed when the combustors are operating. It is anticipated that the ash collected from the combustion process will be sold to a concrete or asphalt manufacturer. Emissions will be limited to 0.035 pounds per cubic foot on a continuous basis.

Aqueous Ammonia Storage Tank

The aqueous ammonia used to control NOx emissions will be stored in a 12,000-gallon above-ground pressurized storage tank, and fed into the fluidized bed combustors on a continuous basis. Storage tank emissions will occur after loading of aqueous ammonia into the tank (upon hose disconnect, approximately 24 hours per year), and not while the aqueous ammonia is being fed into the combustors. The discharge point is estimated to be about 15 feet above ground. Loading will require about 20 minutes, approximately 72 times a year.

3.3 MSF Sources

A single point source of particulate emissions will be associated with the metal shredding facility. The stack, identified as the cascade separator bleedoff stack, with a diameter of 1.5 feet will discharge at a height of 120 feet above grade. Air flow will be a maximum of 5000 acfm. Particulate emissions will be controlled by a high energy Venturi Scrubber. Particulate emissions will be limited to 0.01 grains/dscf, or a maximum of 0.43 pounds per hour. The source will be limited to 16 hours per day operation.

3.4 Other Site Sources

A 12,000 gallon capacity above-ground propane tank will be installed to store start-up fuel for the fluid bed combustors, as well as for fueling indoor mobile equipment. Emissions will only occur after filling of the tank (upon hose disconnect), and not while propane is being fed to the combustors. Filling will require about 30 minutes, approximately 12 times per year.

A 12,000 gallon above-ground No. 2 Diesel Fuel tank will be installed to store fuel for on-site mobile equipment, as well as the tractor trailer fleet utilized for solid waste, RDF and product haulage.

The diesel fuel tank will be painted white. The bulk of emissions will occur during filling of the tank, estimated to be 32 hours per year. During other times, the tank will experience breathing losses due to temperature variations.

SECTION A
FACILITY (General Information)

A1

REVISED: 04/15/94 AIR QUALITY SECTION - APPLICATION FOR AIR PERMIT TO CONSTRUCT/OPERATE

FACILITY NAME: Carolina Energy, L.P.

MAILING ADDRESS: 4600 Marriott Dr., Suite 460 | SITE ADDRESS: 3031 Black Creek Road, SE

CITY: Raleigh | CITY: Wilson | COUNTY: Wilson

STATE: NC | ZIP CODE: 27612 | ZIP CODE: 27894

CONTACT PERSON: Farrell Scott | TITLE: Manager of NC Projects

TELEPHONE: 919-781-7522 | FAX: 919-781-8944

OWNER OF FACILITY: Carolina Energy, L.P.

MAILING ADDRESS: 11757 Katy Freeway, Suite 1420

CITY: Houston | STATE: TX | ZIP CODE: 77079

CONTACT PERSON: George Armistead | TITLE: Chairman and CEO

TELEPHONE: 713-558-4300 | FAX: 713-293-0240

DESCRIBE TYPE OF OPERATION: Municipal Solid Waste Resource Recovery

SIC CODE(S): 5093, 4953, 4911 | DESCRIPTION OF PRIMARY SIC GROUP: Scrap & Waste Mat'ls.

FACILITY COORDINATES	UTM EAST: 237.220	OR	LATITUDE:
	UTM NORTH: 3952.610		LONGITUDE:

HAVE YOU INCLUDED (X) CONSISTENCY DETERMINATION ( ) SOURCE REDUCTION & RECYCLING FORM D3-3 AND (X) APPLICATION FEE ?

FACILITY IS: ( ) TITLE V FACILITY ( ) NON-TITLE V FACILITY (X) SYNTHETIC MINOR

IF TITLE V INDICATE APPLICABILITY 1 2 3 4 5 (CIRCLE ALL THAT ARE APPLICABLE)

APPLICATION IS BEING MADE FOR (CHECK ALL THAT APPLY, NOTE: (TV) INDICATES APPLICABILITY TO TITLE V FACILITIES ONLY):

(X) NEW FACILITY
( ) MODIFICATION
( ) EXISTING EMISSION SOURCE(S)
( ) INITIAL TITLE V PERMIT (TV)
( ) NEW FACILITY (TV)
( ) MINOR MODIFICATION (TV)
( ) SIGNIFICANT MODIFICATION (TV)
( ) RENEWAL (TV)
( ) PSD (TV)
( ) NON-ATTAINMENT (TV)
( ) 112(g) (TV)

IF APPLICATION IS BEING MADE FOR ANY OF THE FOLLOWING, FORM A2 MUST BE ATTACHED TO THIS FORM:

( ) ADMINISTRATIVE AMENDMENT
( ) ADMINISTRATIVE AMENDMENT (TV)
( ) RENEWAL
( ) CHANGE OF OWNERSHIP
( ) CHANGE OF OWNERSHIP (TV)
( ) RELOCATION (WITHIN FACILITY)
( ) RELOCATION (WITHIN FACILITY) (TV)
( ) LIKE-FOR-LIKE REPLACEMENT
( ) LIKE-FOR-LIKE REPLACEMENT (TV)
( ) 502(b)(10) NOTIFICATION (TV)

HAVE YOU INCLUDED: (X) FLOW CHART(S) ( ) ROOF DIAGRAM (X) PLANT LAYOUT (X) PLOT PLAN (X) AREA DIAGRAM

CURRENT/PREVIOUS PERMIT NO: | EXPIRATION/DISCONTINUED DATE:

DO YOU CLAIM CONFIDENTIALITY OF DATA ( ) YES (X) NO *(SEE INSTRUCTIONS)*

SIGNATURE OF RESPONSIBLE PERSON OR COMPANY OFFICIAL: X George Armistead | TITLE: Chairman and CEO | DATE: August 16, 1994

(TYPED) George Armistead

DEPARTMENT USE ONLY:	RECEIVED:	ASSIGNED TO:	PREMISE NUMBER:
APPLICATION NUMBER:	RETURNED:	COMPLETE:	REVIEW DATE:
PERMIT NUMBER:	DATE ISSUED:		

SECTION A
EMISSION SOURCE LISTING (NEW FACILITY)

A4

REVISED: 04/15/94 **AIR QUALITY SECTION** DO NOT USE FOR TITLE V INITIAL/RENEWAL

EMISSION SOURCE ID NO.	EMISSION SOURCE DESCRIPTION	CONTROL DEVICE ID NO.	CONTROL DEVICE DESCRIPTION	EMISSION POINT ID NO. or "FUGITIVE"
ES-CFB-1	Fluid Bed Booler	FF-1	Fabric Filter	001
ES-CFB-2	Fluid Bed Boiler	FF-2	Fabric Filter	002
ES-PL	Powered Limestone Bin	FF-3	Fabric Filter	003
ES-HL	Hydrated Lime Bin	FF-4	Fabric Filter	004
ES-SS	Sand Silo	FF-5	Fabric Filter	005
ES-AS	Ash Silo	FF-6	Fabric Filter	006
ES-PF-1	Process Filter No. 1	FF-7	Fabric Filter	007
ES-PF-2	Process Filter No. 2	FF-8	Fabric Filter	008
ES-CSB	Cascade Sep. Bleed	WS-1	Wet Scrubber	009
ES-AM	Aqueous Ammonia Tank		None	010
ES- DFT	Diesel Fuel Tank		None	011
ES-PT	Propane Tank		None	012
ES-MS	Metal Shredder		Steam & Water Inj.	Fugitive

COMMENTS:

Section 7

DRAFT

OPERATIONS AND MAINTENANCE MANUAL

FOR

CAROLINA ENERGY, LIMITED PARTNERSHIP

MIXED WASTE PROCESSING FACILITY

AT

3031 BLACK ROCK ROAD

WILSON, NORTH CAROLINA

DRAFT

AUGUST 1994

PREPARED BY:

Kenneth L. Woodruff & Associates
Resource Recovery Consultants
P.O. Box 42
Morrisville, PA 19067

TABLE OF CONTENTS

INTRODUCTION

1.0 ROUTINE OPERATIONS PROCEDURES 1-1
1.1 Project Administration 1-1
1.2 MRF Operations 1-2
1.3 Transportation Operations 1-3
1.4 Description of Routine Operations Procedures 1-4
1.5 Interim Storage Procedures for Recovered Materials..1-8

2.0 FACILITY AND PERSONNEL PROTECTION 2-1
2.1 Training 2-1
2.2 Equipment and Uniforms 2-1
2.3 Locker Storage 2-2

3.0 NOISE, LITTER, ODOR AND VECTOR CONTROL 3-1
3.1 Noise 3-1
3.2 Litter 3-3
3.3 Odor 3-4
3.4 Vectors 3-5

4.0 NON-ROUTINE OPERATIONS PROCEDURES 4-1
4.1 Scale House Truck Scales 4-1
4.2 Wheel Loader 4-2
4.3 Conveyors, Trommels, Balers, Magnetic Separator, Eddy Current Separators, Shredders, Compactors.....4-3
4.4 Transfer Trailer 4-3
4.5 Inadvertently Accepted Unacceptable Waste 4-3
4.6 Power Outage 4-4

5.0 FIRE PREVENTION AND CONTROL 5-1

6.0 FACILITY SHUTDOWN PROCEDURES 6-1
6.1 Scale House 6-1
6.2 Processing Building 6-1
6.3 Site 6-2

7.0 SECURITY 7-1
7.1 Facility Security 7-1

8.0 INSPECTION PLAN 8-1

9.0 MAINTENANCE PLAN 9-1
9.1 Purpose 9-1
9.2 Personnel 9-1
9.3 Training 9-1
9.4 Incident Prevention 9-1
9.5 Malfunction Prevention 9-2
9.6 Failure Analysis 9-2
9.7 Spare Parts Inventory 9-5
9.8 Anticipated Repairs 9-7
9.9 Record Keeping 9-7
9.10 Maintenance Schedule 9-7

10.0 FACILITY STAFFING PLAN 10-1

11.0 TRAINING PLAN 11-1

12.0 SAFETY PLAN 12-1

13.0 WASTE INSPECTION AND CONTROL PLAN 13-1

14.0 EMERGENCY CONTINGENCY PLAN 14-1
14.1 Fire 14-1
14.2 Floods 14-2
14.3 Hazardous Substance Discharge 14-3
14.4 Peak Loadings 14-4
14.5 Evacuation Plans 14-4
14.6 Amendments 14-5
14.7 Emergency Services Contacts 14-5

Figure 1 MRF Project Components
Figure 2 Employee/Staffing Chart
Figure 3 Failure Mode and Effects Chart
Figure 4 Evacuation Routes

Exhibit 1 Vehicle Excessive Noise Form
Exhibit 2 Temporary Scale Record Form
Exhibit 3 Employment Application
Exhibit 4 Job Descriptions

Appendix A Approved Traffic Routing Plan
Appendix B Wheel Loader Operation and Maintenance Manual
Appendix C Fork Lift Operation and Maintenance Manual
Appendix D Mack Truck Maintenance Manuals
Appendix E Trailer Operation and Maintenance Manual
Appendix F Truck Scale Operation and Maintenance Manual
Appendix G Sweeper Operation and Maintenance Manual
Appendix H Sound Level Meter Owner's Manual
Appendix I Baler Operation & Maintenance Manual
Appendix J Shredder Operation & Maintenance Manual
Appendix K Trommel Operation & Maintenance Manual
Appendix L Magnetic Separator Operation and Maintenance Manual
Appendix M Eddy Current Separator Operation and Maintenance Manual
Appendix N Conveyor Maintenance Manuals

Attachment I OSHA Rules and Procedures (Table of Contents)

INTRODUCTION

The Carolina Energy, Limited Partnership Mixed Waste Processing Facility, also referred to as a Materials Recovery Facility (MRF), is a facility designed in accordance with State of North Carolina requirements for the receipt, processing, recovery and transfer of materials from approximately 1,400 tons per day of municipal solid waste generated within the Counties of Lenoir, Pitt, Wilson, Nash and Edgecombe.

This Operations and Maintenance Manual has been developed to comply with NC DEHNR requirements and will serve as a guide for all personnel involved in facility operations. It provides basic facility data and will be provided to all employees as part of the employee training program.

1.0 ROUTINE OPERATIONS PROCEDURES

Figure 1, PROJECT COMPONENT CHART, indicates that the MRF project consists of three major components:

Project Administration

Facility Operations

Transportation Operations

Procedures for operation of each major component are outlined as follows:

1.1 Project Administration

This component of the project has two office locations as follows:

Carolina Energy, Limited Partnership
c/o VEDCO Energy Corp.
Suite 1420
11757 Katy Freeway
Houston, TX 77079
Phone No. (800) 285-8331
FAX No. (713) 293-0240

Carolina Energy, Limited Partnership
3031 Black Creek Road
Wilson, NC 27894

The Houston Office will act as the comptroller for the project. The office will be equipped with a computer terminal tied directly to the on-site computer system. A full time clerk will be responsible for daily monitoring and record keeping for the following:

Waste Quantities Received
Waste Quantities Recycled
RDF Quantities Shipped
Recycled Quantities Shipped
Residue Quantities Shipped
Revenue Receipts and Billing Statements
Deposits to Corporate Account
Payroll Expenses
All other Project Expenses

In addition, the Houston Office will manage all outside professional services, including, but not limited to:

C.P.A. Auditing Services
Legal Services
Engineering Services

The Wilson Office will house the on-site administrative employees including:

Plant Manager
Assistant Plant Manager
Transportation Manager
Foreman
Secretary
Clerk

The on-site office staff will manage the MRF on-site EGF and transportation components serving the project on a daily basis. Administrative services will be provided to cover three basic areas:

Personnel
Clerical - Recordkeeping and Reporting
Revenue Collections

1.2 MRF Operations

Operation of the MRF requires haulers and municipalities to deliver acceptable waste to the MRF.

Once trucks of waste arrive on site, the following operations will be performed.

A. Weighing of incoming loads by use of computerized scales.

B. Direction of trucks to the appropriate tipping floor/area.

C. Unloading of waste onto the appropriate tipping floor/area.

D. Inspection of waste as unloaded on tipping floor.

E. Stockpiling of waste on the tipping floor and feeding via front-end loader to the processing line.

F. Recovery of recyclables by mechanical and handpicking.

G. Baling and packaging of recovered materials for shipment to end users.

H. Loading of non-recoverable waste into open top containers or trailers for transfer to the designated Landfills for disposal.

I. Loading of RDF via compactors onto trailers for transport to the Lenoir EGF.

J. Stockpiling of RDF in the walking floor storage area for on-site EGF use.

K. Weighing of out-going trailers, for official records by the out-going computerized scale.

L. Daily facility inspection, maintenance and housekeeping.

1.3 Transportation Operations

The principal elements of this component are:

A. Carolina Energy, Limited Partnership (Carolina) owned and operated fleet of tractor rigs and open top live bottom transfer trailers.

B. The Carolina owned fleet will be supported by 3 levels of service.

1. On-site services consisting of a refueling station and a maintenance area.
2. Road service to be provided by service personnel and service vehicle of Carolina.
3. Provisions for vehicle inspection and maintenance service prior to the trucks leaving the Lenoir EGF for the return trip to the MRF.

1.4 Description of Routine Operations Procedures

During normal, routine operation of the MRF, solid waste collection vehicles will arrive at the facility via the main entrance road.

Upon arriving at the MRF, refuse trucks will proceed to the scale house to be weighed and to obtain a weight/identification ticket. At no time will trucks be queuing on public roads. Noise levels of incoming vehicles will be measured on a random basis to determine compliance with North Carolina Noise Regulations. Trucks not meeting the standard will not be permitted to re-enter the facility until appropriate repairs are made to assure compliance with Noise Regulations.

Upon leaving the scale house, each truck will be directed to the appropriate tipping location depending upon the type of waste.

The collection vehicles will back into the designated tipping location and the driver will give the ticket to one of the Spotters stationed on the tipping floor. The Floor Spotter will observe the unloading of the truck, specifically looking

for undesirable materials, waste types which do not comply with waste type identified on the ticket, and unacceptable wastes. The Floor Spotter will mark appropriate changes on the ticket and return it to the driver. Floor Spotters are specifically trained in the identification of waste types and identification of potentially hazardous and unacceptable wastes.

The truck driver then drives to the outgoing truck scale for tare weight and turns in the ticket to the scale operator.

Any hazardous or suspicious waste identified at the time of unloading will be placed in a designated storage area for appropriate handling and disposal. The NC DEHNR Washington Office will be notified by telephone. A licensed hazardous waste transportation and disposal firm, under contract to the facility, will be notified to arrange disposal for all hazardous substances on as needed basis.

Acceptable waste on the tipping floor will be stockpiled and moved to the appropriate process feed conveyor by two wheel loaders. Non-processible waste will be loaded into 40 cubic yard open top, roll-off containers for transfer to the designated sanitary landfill.

Front end loaders will push MSW onto one(1) of two(2) apron conveyors which feed the two(2) MRF process lines. The apron conveyor moves MSW past Picking Station No. 1 where pickers will manually remove large and non-processible materials, as well as newspaper and corrugated paper prior to screening in the two-stage Trommel.

The front section of the Tromel is equipped with blades and

spikes to break open plastic bags and remove materials less than two inches in size. Minus 2-inch material passes under Magnetic Separator No. 1 to recover most of the ferrous metals, then to a Stoner for removal of organic materials. Organic materials are conveyed to the RDF conveyor, while dense, primarily non-organic materials are further processed by crushing, screening and air density separation to produce a recyclable aggregate product.

The second section of the Trommel removes minus 6-inch material. Such material is magnetically separated and conveyed to an Eddy Current Separator for recovery of aluminum cans. The stream then is conveyed to Picking Station No. 3 where additional aluminum, as well as plastics (HDPE and PET) are recovered from the stream. Remaining materials are conveyed to compactors for loading onto live bottom transfer trailers, as part of the RDF product.

The material from the Trommel, which is larger than six inches, is conveyed to Picking Station No. 2 for recovery of ferrous metals, non-ferrous metals and plastics. The stream from Picking Station No. 2 passes a Magnetic Separator for recovery of additional ferrous metals. The remaining MSW then joins the output from Picking Station No. 3 and is conveyed to the compaction loadout system for use as RDF.

Products recovered from the MSW are processed as follows:

1. Bulky wastes shall be placed in roll-off containers for transfer to a designated landfill.
2. Corrugated paper shall be conveyed to Baler No. 1 for baling.

3. Newsprint shall be conveyed to Baler No. 2 for baling.
4. Bulky aluminum and bulky ferrous metals shall be placed in roll-off containers for shipment to the on-site metals shredding system to be upgraded to market specifications.
5. Plastics shall be conveyed to a perforator and Baler No. 3 for baling.
6. Ferrous metals from the Magnetic Separators shall be loaded into roll-off containers or open top trailers for transfer to the on-site metal shredding system.
7. Aluminum cans shall be conveyed to Baler No. 4 for baling.

At the end of each operating day, the tipping floor and MRF areas will be swept clean.

An in-house security team will provide on-site security during all hours including nights and weekends. Such personnel will utilize a punch-in system at key stations throughout the MRF site during non-operating hours.

A Road Service Person will be provided with a service van for the purposes of minor vehicle maintenance, safety checks and the recording and logging of vehicle maintenance and service records.

All on-site personnel will be equipped with 2-way radios to facilitate on-site communications. The transfer tractors and service van will be equipped with radios to assure prompt, reliable communications with operating personnel at the MRF and EGF facilities.

1.5 Interim Storage Procedures for Recovered Materials

Ferrous Metals - Steel scrap will be stored in roll-off containers or open top trailers prior to transfer to the on-site metal shredding system.

Aluminum - Bulky aluminum will be stored in roll-off containers prior to transfer to end on-site metal shredding system. Aluminum cans will be baled upon recovery. Bales will be stored in van trailers prior to shipment to end users.

Paper - Various grades of paper will be stored in live bottom bins prior to baling. Baled paper will be stored in the MRF prior to loading into van trailers for shipment to end users. All storage will be indoors or in closed containers or trailers.

Plastics - Plastic bottles recovered from the waste will be stored in live bottom bins by type prior to perforation and baling and shipment to end users. Bales may be stored within the facility or loaded directly into van trailers for shipment to end users.

Glass & Grit - This material will be stored in open top trailers or roll-off containers prior to transfer to end users.

2.0 FACILITY AND PERSONNEL PROTECTION

2.1 Training

All employees will receive on-site training in order to acquaint them with the potential problems and emergencies that can arise in the operation of the MRF facility. During training each employee will be given specific instructions on OSHA Rules and Procedures. The procedures to be followed in case of emergencies (Emergency Contingency Plan-Section 14) will be outlined and reviewed at monthly Safety Meetings during the year. Pertinent segments of OSHA Rules and Procedures are included as Attachment I to this Manual. This O&M Manual will serve as the basis for the personnel training program as outlined in Section 11.

2.2 Equipment and Uniforms

All employees will be provided Safety Shoes and Hard Hats before being allowed to commence work. Uniforms will be provided in order to easily distinguish plant employees from visitors and collection vehicle drivers. Protective safety gear will be maintained on-site for use in the event of accidental receipt of any hazardous substance and other emergencies.

A list of equipment and supplies maintained on-site is as follows:

Item	No. Stocked
Corrosive & Acid Resistant Uniforms	2
Work Gloves & Rubber Gloves	60

Goggles	12
Ear Muffs	12
Respirator Masks-Full Face	2
Respirator Masks-Half Face	12
First Aid Kits	4
Eye Wash Station	1
Safety Vests	24
Hard Hats	24
Rain Gear	6
Flashlights	12
Fire Extinguishers-6 pound size	6-Tipping Floor
	6-Recovery Areas
	3-Office
	1-Scale House

2.3 Locker Storage

All on-site employees will be provided a locker in the second floor locker room area for safekeeping of each employee's personal belongings.

3.0 NOISE, LITTER, ODOR AND VECTOR CONTROL

3.1 Noise

Noise is emitted by several sources. For purposes of this Manual they will be grouped into two categories: refuse collection vehicles and MRF vehicles and equipment. Noise control measures for each category are described as follows:

Refuse Collection Vehicles - Refuse collection vehicles will be monitored as they enter the site on a random basis. A designated employee will stand within the Noise Monitoring Area, a concrete pad situated along the roadway near the inbound truck scale.

- The Sound Level Meter owned and maintained by MRF is a Realistic Model No. 33-2050. A copy of the Owner's Manual is included in Appendix H.
- This employee will calibrate the noise meter in accordance with the manufacturer's instructions.
- Noise readings will be observed as collection vehicles approach the inbound truck scale.
- Vehicle owner and ID number will be observed.
- If readings are less than 85 dBA, the meter reader will direct the scale operator to allow the vehicle to proceed to the MRF.
- If readings are greater than 85 dBA, the meter reader will check whether this is the first time for the specific truck to exceed the noise limitation.

a. If a first offense, the driver will be issued a warning notice. After receiving this notice, the vehicle will proceed to the MRF. A copy of the notice will be mailed to the vehicle owner. A record will be maintained.

b. If a second offense, the truck driver will be permitted to unload refuse at the MRF, but will be issued a notice that it will not be permitted to unload the next time. The vehicle will be directed to exit from the site and not return until appropriate repairs have been made.

c. In either case, the meter reader will enter the date, ID number, dBA reading, and other data onto a Vehicle Execessive Noise Data Form. (Exhibit 1) Records of all data and notices will be maintained by the MRF office.

MRF Vehicles and Equipment - MRF vehicles and equipment expected to create noise include truck tractors, wheel loaders, utility truck and sweeper. Each of these will be checked monthly for noise levels. If noise levels are approaching noise limits, mufflers, exhaust silencers, and other exhaust system components will be replaced as required to maintain all vehicles within the noise limitations specified by NC DEHNR. Records of tests conducted on MRF equipment will be maintained by the facility office.

3.2 Litter

Litter control will be exercised through preventative and routine operational measures using Best Management Practices.

- Incoming roll-off vehicles will not be permitted to remove tarpulins, covers, or other closures prior to entering the tipping building.
- Incoming packer trucks (front loader, side loader, rear loader) will not be permitted to have turnbuckles or tailgate unlatching mechanisms loosened or opened prior to entering the tipping building.
- Roll-off vehicles and packer trucks will be directed to return the tilt frame/tailgate to the normal position while within the tipping building to minimize the effects of wind and the potential for wind-blown litter.
- MRF transfer trailers and roll-off containers will have tarpaulins placed over their tops immediately prior to exiting from the MRF.
- Wheel loaders working on the tipping floor will keep solid waste away from door openings to prevent windblown litter. Under no circumstances will waste susceptible to being blown away be discharged or stored outside of the tipping building.
- During slow periods throughout the working day and as necessary, a wheel loader will be driven to the RDF trailer loading area. Available personnel will use hand implements (push broom, square bladed shovel) to

collect spillage and directly load it into the wheel loader bucket. The wheel loader will then travel back to the tipping floor. Alternatively, the material may be loaded into a container and transported by the wheel loader back to the tipping floor.

- The Elgin Sweeper will be used on a daily basis to sweep the on-site roadways. On-site personnel will be assigned responsibility for inspecting the site daily and retrieving litter as required. Litter will be placed in a bag or container and transported to the tipping floor.

3.3 Odor

Odor will be controlled through the routine daily transfer of recovered products and processed and bypass waste out of the facility (in transfer trailers) and through good housekeeping practices, as well as through the installation and operation of a dust collection system on the MRF. All refuse handling facilities normally have a residual odor, but this will be kept to a minimum through the following practices:

- When a choice can be made for processing a load of putrescible refuse (household or restaurant refuse, for example) instead of a less odiferous type of waste (dry commercial waste, for example), the putrescible waste will be processed first.
- Daily sweeping and cleaning of the facility tipping floor will keep odors to a minimum.

- If odor becomes a noticeable problem during certain time periods, a sweeping compound (Odorid, Odor Control Granules, or equal) will be distributed on the tipping floor by a broadcast-type spreader at the end of the work day after the tipping floor has been swept and cleaned.
- During operation of the MRF, the MRF building will be kept under negative pressure by the operation of a dust collection system. Such system will include a fabric filter for removal of dust particles prior to air discharge to atmosphere. A portion of the air will be utilized as make-up air for the on-site EGF system.

3.4 Vectors

Vectors will be controlled primarily through good housekeeping practices and no long term storage of unprocessed waste. A vermin control program is to be developed and directed by a qualified firm. This will provide a continuing control and prevention program. The program as well as application of any pesticides will be by qualified personnel as set forth by the North Carolina Pesticide Control Code.

4.0 NON-ROUTINE OPERATIONS PROCEDURES

Procedures for operating the MRF when equipment becomes temporarily inoperable are presented as follows:

4.1 Scale House Truck Scales

- If the scale computing equipment becomes inoperable, the "Scale Operator" will contact the "Plant Manager" to report the malfunction and take appropriate steps to repair the equipment.
- During the time until the computing equipment becomes operational, the "Scale Operator" will manually enter the vehicle ID number, truck size (roll-off container size) and vehicle weights from the truck scales onto the "Temporary Scale Record Form."(Exhibit 2)
- If the scale equipment can not be returned to working order by in-plant personnel, the scale maintenance contractor will be contacted for an emergency service call to the site.
- If there is a power outage, or both truck scales are fully inoperable (faulty load cell), the Scale Operator will manually enter the company, vehicle ID number, truck size and refuse type (under GROSS VEHICLE WEIGHT heading) by ID number. (See Temporary Scale Record Form - Exhibit 2)

- In the event of malfunction of either the in-going truck scale or out-going scale, traffic may be re-routed to utilize the one remaining scale in operation.
- If vehicles can not cross the truck scales, safety cones will be placed in front of and around the inoperable truck scale. Traffic will be directed around the scales.

4.2 Wheel Loader

- If a wheel loader becomes inoperable, the "Loader Operator" will contact the Lead Operator or Plant Manager. The Lead Operator will direct the mechanic to the tipping floor to determine with the "Loader Operator" the nature of the problem. The loader will be moved out of the tipping floor area and into the maintenance area for repairs. The facility will continue in operation using the second wheel loader.
- If it is determined by maintenance personnel that repairs requirements are extensive, the Plant Manager will contact a nearby machinery company, to request a wheel loader rental. Pre-arrangements will have been made between Carolina and a machinery company to provide a backup wheel loader for this purpose.
- The operable wheel loader on-site will begin stockpiling incoming waste, in addition to feeding the processing system. The facility can be operated with

one wheel loader, due to the size machines on-site equipped with 6 cubic yard buckets.

4.3 Conveyors, Trommels, Balers, Magnetic Separator, Eddy Current Separators, Shredders, Compactors

If one of these becomes inoperable, the Plant Manager and an on-site Mechanic will be notified of outage. A decision will be made as to whether to remain shutdown until repairs can be made, or to activate bypass provisions or activate redundant equipment built into the processing system.

4.4 Transfer Trailer

- If a transfer trailer becomes inoperable, the "Tractor Trailer Driver" will telephone the MRF Facility. Depending on the type or location of the breakdown, the following personnel would be contacted:

  Off-Site - EGF Contact

  Mechanical/On-Site - Mechanic

  Tires/On-Site - Road Service Personnel

- The Transportation Manager will be notified of the outage and the equipment schedule modified as may be required. If necessary, equipment from a contracted hauling service will be requested to provide a backup equipment.

4.5 Inadvertently Accepted Unacceptable Waste

- Suspicious or unacceptable waste detected at the time

of unloading will be immediately placed in a designated storage area to await inspection and proper disposal. The Load Operator or Plant Manager will notify the NC DEHNR.

- If suspicious waste is identified on the tipping floor, the "Loader Operator" will isolate the unacceptable waste from surrounding material using the loader. The unacceptable waste will be moved by the loader to the designated storage area. The NC DEHNR will be notified.
- Suspicious or unacceptable wastes will be placed in a 20 cubic yard roll-off container. The container will be stored in a designated area. The container will be labelled with Danger signs. In this way the material will be protected from the ongoing operations.
- The NC DEHNR will be notified in the event of receipt of unacceptable or hazardous wastes. A licensed hazardous waste transportation and disposal firm under contract to Carolina will be notified to make arrangements for the removal and proper disposal of the materials.

4.6 Power Outage

During a temporary power outage, the following procedures will be followed:

- The Weigh Master will manually enter the company, vehicle ID number, truck size and refuse type (under

GROSS VEHICLE WEIGHT heading) by ID number. (See Temporary Scale Record Form - Exhibit 2)

- Collection vehicles will proceed to the tipping building for unloading on the tipping floor.
- Battery powered security lighting will be on.
- Wheel loaders and other mobile equipment will turn on lights when operating within the building.
- Personnel in the MRF Area will undertake cleanup operations while awaiting restoration of power.

5.0 FIRE PREVENTION AND CONTROL

Fire prevention and control is accomplished through the construction and maintenance of the MRF in compliance with codes and regulations of the State of North Carolina, County of Wilson and City of Wilson and through proper personnel training. The processing building and equipment will be equipped with appropriate sprinkler systems. Smoking is not permitted in the tipping or MRF processing building.

Fire hydrants are located on-site. Lengths of fire hose are stored in areas adjacent to the tipping floor and MRF areas.

Fire extinguishers (A, B, C type) are maintained within the facility, office area, maintenance area and in the scale house.

A regular monthly inspection program of all firefighting equipment and systems will be conducted by the Plant Manager.

Communication systems and alarm systems will be tested on a monthly basis.

A fire training program will be provided by the local Fire Department.

Emergency Contact Information is to be posted by all telephones in the facility.

In the event of receipt of a 'hot load' of waste material, that is a load smoldering, smoking or burning, the procedure will be to immediately dump the load on a paved roadway. A front-end loader will be used to isolate the 'hot' material from the rest of the load. On-site fire fighting equipment (hose and fire hydrant) will be put into service. At the time of noticing the 'hot load', the local fire department will be notified.

6.0 FACILITY SHUTDOWN PROCEDURES

The facility will be shutdown at the end of each operating day in accordance with the procedures outlined.

6.1 Scale House

- Data recorded by the truck scale data management system will be down loaded to the MRF central data storage system by the Weigh Clerk.
- All daily transactions will be checked by the Weigh Clerk. Appropriate documents will be taken to the Plant Manager.
- The Scale House lights will be kept on for security purposes. The thermostat will be turned down to a lower heating setting or the air conditioning "off". The Scale House windows and door will be locked by the Weigh Clerk.

6.2 MRF Processing Building

Housekeeping

- The tipping floor will be cleaned first by a wheel loader bucket. Dry sweeping of the tipping floors and recovery areas will be conducted with sweepings picked up by square bladed shovels and placed into a wheel loader bucket. The bucket will be dumped into a roll-off container. The mobile sweeper will be used as required.

- The MRF and all Picking Stations will be swept with all sweepings placed into fork lift hoppers for transfer to a roll-off container.
- The RDF loadout area will also be swept, with sweepings picked up by a square bladed shovel and placed into a wheel loader bucket. The bucket will be dumped into a roll-off container. The mobile sweeper will be used as required.

Equipment

- Wheel loaders will be driven to the fueling area and the fuel tanks topped off with diesel fuel. They will then be driven to the tipping floor for parking overnight. The sweeper will also be parked on the tipping floor.

Security

- After all equipment is parked, the building will be secured. The rollup doors will be closed, emergency exit doors checked and lights turned off.
- Lights, thermostats and doors will be checked in the administrative area.

6.3 Site

Housekeeping

- The roadways and all work areas will be swept by the Elgin Sweeper. Fence lines will be visually inspected for litter and cleaned as necessary. The sweeper will operate daily on all facility roadways.

Equipment

- Fueling equipment will be turned off and locked after all mobile equipment and tractor trailers are fueled.
- Tractor trailers will be parked in the areas designated. All other mobile equipment will be parked inside one of the facility buildings.

Security

- After all employees exit from the facility, the main gate will be locked.
- Security personnel will be on-site throughout all non-working hours.
- Site lighting will be actuated by photocells to maintain a lighted site during night time hours.

7.0 FACILITY SECURITY

- Security will be provided by security staff personnel on a 24 hour per day basis, or at all times other than normal facility operating hours. Routine patrol of the site will be conducted. Check-in points or key stations will be installed throughout the facility and site.
- Fencing and locked gates will prevent unauthorized entry into the site during non-working hours.
- Site lighting will illuminate roadways and building entrances at night time.
- The fire sprinkler system will have an alarm to indicate if the system is actuated.

7.1 Facility Security

To assist with facility security, the following will be provided:

- Security by Fencing - To maintain control of access to the facility, the entire perimeter of the site is fenced. The only access point is through the main entrance gate in full view of personnel at all hours. The main entrance gates are to be closed and locked during non-operating hours.
- Security by Lighting - The entire site will be lighted during night hours by the grounds lighting system. Any light found to be out or improperly functioning is to

be repaired immediately. Lighting will be inspected on a daily basis.

- Equipment Security - To protect the fleet of transfer tractor-trailers, all units are to be inspected before leaving the facility and again at the EGF site before returning to the MRF.

8.0 INSPECTION PLAN

The inspection plan is presented in tabular form. Major facility components are listed for the Scale House, MRF Building and Facility Site Improvements. Items to be checked and the frequency of inspection are presented.

Repairs or corrective actions required will be performed in accordance with equipment manufacturers recommended procedures. Copies of equipment maintenance procedures are included in the Appendices of this Manual.

All inspection records are to be maintained in a bound Inspection Log Book.

INSPECTION PLAN

FACILITY COMPONENT and ITEMS TO BE CHECKED/LOGGED and REPORTS MAINTAINED

Scale House

Truck Scales

- o Scale deck clearances; Daily Inspection
- o Loadcells, Data Management System, Scale Calibration; Manufacturers Requirements

Building Exterior

- o Roof, siding, foundation wall; Annual Inspection

Gutters

- o Clean out leaves, etc.; Annual Inspection (Fall)

HVAC

- o Furnace filters; Semi-annual Inspection
- o Controls/Components; Manufacturers Requirements

Noise Meter

- o Meter; Manufacturers Requirements

Fire Extinguishers

- o Proper Pressure; Monthly Inspection

First Aid Kit

- o Completely stocked; Monthly Inspection

Electrical System

- o Disconnect Boxes & Circuit Boxes; Semi-annual Inspection

MRF Building

Building Exterior

- Roof, siding, foundation wall; Annual Inspection

Gutters

- Clean out leaves; Annual Inspection (Fall)

Rollup Doors

- Slats, door guides; Daily Inspection

Sprinkler System

- Entire System; per Fire Department and manufacturer requirements; minimum monthly inspection

Fire Extinguishers

- Proper pressure; Monthly Inspection
- Operating condition; Monthly Inspection

First Aid Kits

- Completely stocked/equipped; Monthly Inspection

Emergency Lighting

- Battery packs; Monthly Inspection

HVAC

- Filters; Semi-annual Inspection
- Controls/Components; Manufacturer Requirements

Emergency Exit Doors

- Proper Operation; Monthly Inspection

Electrical System

- Disconnect Boxes, circuit breakers; Semi-annual Inspection

Communication and Alarm Systems

- Indicators, horns, per manufacturers requirements; minimum monthly inspection

Site Improvements

Catch basins

- Sediment; Semi-annual Inspection

Fence

- Barbed wire, fabric, posts; Semi-annual Inspection and portions during litter patrol

Pavement

- Cracking, settlement; During daily sweeping

Landscaping

- Trees, shrubs; Monthly Inspection

Fuel Tank

- Monitoring system operation; Semi-annual Inspection

9.0 MAINTENANCE PLAN

9.1 Purpose

The purpose of the plan is to establish maintenance procedures for providing a high level of assurance that the MRF operations are not unduly affected by malfunctions and adverse incidents. This plan is intended to be responsive to the results of inspection work performed under the Inspection Plan. To this end, if certain repeated deficiencies are noted during inspections, these deficiencies may be addressed as maintenance items by addenda to the maintenance plan, which concentrates on mechanical and electrical equipment.

9.2 Personnel

Maintenance will be performed by maintenance crew personnel, under the direction of the Lead Operator and Plant Manager.

9.3 Training

Maintenance training will take the form of meetings, maintenance run-throughs, discussions, and practice in filling out report forms. Training will be an ongoing process, reinforced by experience and by discussions with the Plant Manager.

9.4 Incident Prevention

A proper maintenance program assists in preventing environmental incidents. These incidents may be caused by

malfunctioning electrical and mechanical equipment, the prime target of the maintenance program.

9.5 Malfunction Prevention

An effective maintenance program reduces electrical and mechanical malfunctions to a minimum, makes the working environment safer, and saves significant downtime in the long term.

9.6 Failure Analysis

In standard industrial practice, various system failure analytical methods have evolved over the years. For the purpose of evaluating the MRF operations, the Failure Modes and Effects Analysis (FMEA) method has been selected. This method is qualitative in nature and can be diagramatically presented. The FMEA chart for the facility is presented as Figure 3.

The FMEA indicates various failures that can occur due to a variety of causes including breakdowns, inclement weather, accidental damage, and a shortage of RDF transfer trailer vehicles.

The result of these major component failures can be either stoppage of the facility or an increased potential for accidental damage. Neither of these results is acceptable. The maintenance plan must be implemented in a manner that reduces or prevents the possibility of failure of any of the system components. A discussion of the component failures follows:

- Access - The site access point must be controlled to

prevent unauthorized access, and to promote smooth vehicle flow. Inclement weather, breakdown of traffic control, or damage to traffic control devices may cause a failure of this system component. A failure will result in loss of access control and a reduction in traffic control. In this event, there is an increased risk of accidental damage. Site access will be subject to maintenance which will keep signs, gates, locks and traffic control systems in order.

- Weighing - Weighing will not be accomplished if no refuse is available. The weighing system may fail due to scale breakdown or damage or computer management system failure. The scale and computer system will be carefully maintained in strict accordance with manufacturers recommendations. Spare parts will be maintained and a service agreement with the vendor will be in place.
- Direction - Once on-site and weighed, vehicles must be directed by traffic control to the appropriate tipping floor bay area. A loss of control or loss of traction on the pavements will result in an increased potential for accidental damage. Pavement will be maintained and signs will be maintained and repaired if damaged.
- Approach and Bays - The approach and bay areas will be subject to the same failure potentials, and therefore the same maintenance procedures, as the direction component.

- Discharge - Refuse discharge may experience failure due to a lack of incoming refuse, accidental damage or breakdown of equipment. In order to reduce the stoppage potential, the facility equipment will be maintained and repaired.
- Holding - The refuse holding function may fail due to a lack of RDF transfer trailers available to load, due to breakdowns or damage to the mechanical Processing and loading equipment, or due to emergencies such as fire. In order to reduce this failure potential, alarms, fire protection systems, and all RDF transfer and processing equipment will be maintained and repaired if damaged.
- Processing, Recovery and Transfer - The processing, recovery and transfer operation may fail due to breakdown, damage or lack of RDF transfer or product trailers. Lack of trailer failure causes have been addressed previously. The breakdown and damage of equipment will be dealt with by maintenance and by damage repair.
- Departure - Prior to departing, the RDF transfer trailer or product trailer will be inspected and covered. At that point, the vehicle will be subject to the same failure potentials and the same maintenance procedures as discussed for approach.
- Direction - This component is equivalent to that previously discussed for Direction.
- Weighing - This has been discussed previously as incoming vehicle Weighing.

- Egress - This component is equivalent to that discussed for Access.
- Trailer Transit - This component may fail due to vehicle breakdown, inclement weather, road hazards, accidents or difficulties encountered at the end user or disposal site. Vehicle preventative maintenance and the correct outfitting of vehicles will make them more roadworthy in poor weather and will reduce the accident and breakdown potential.
- Emergency Operations - In the event of a natural disaster such as a hurricane or flood, it is possible that operations would be impaired. If an event occurred or appeared imminent, no additional waste would be accepted by the facility. Bypass waste would go directly to the designated sanitary landfill. Loadout of waste already in the facility could be accomplished by staging transfer trailers on the tipping floor and loading them with front-end loaders. The on-site EGF can continue to provide electricity to the facility as long as there is a supply of RDF.

9.7 Spare Parts Inventory

The spare parts inventory will include parts and supplies as are needed for all components of the MRF operation. Contingency items, parts for the wheel loaders, conveyors, magnetic

separator, trommels, eddy current separator, shredders, balers, compactors, transfer trailers and parts for the scales are included as recommended by the manufacturers. Other parts and materials to be inventoried are as follows:

- Access, Traffic Control, Security - Spare parts to be inventoried include keys and locks, bulbs and reflectors, signs and various switches. If mechanical damage occurs to major components such as gates or light poles, purchases will be made at the time of damage to facilitate repair.
- Vehicles and other equipment - Spare parts include supplies and parts needed to keep the vehicles and other equipment operational and includes maintenance supplies such as air filters and oil filters, belts, rollers, bearings, etc. as well as lubricants.
- Alarm, Communication and Power Systems - Spare parts include smoke detectors, batteries, flasher and alarm lights and, reflectors, fuses, circuit breakers, various switches and wire stock.
- Fire Protection Systems - Spare parts include some replacement piping and fittings, various solenoid and other valves and packing, sprinkler heads, equipment and supplies required by code and considered to be in accordance with good practice as determined in conjunction with local fire department personnel.

9.8 Anticipated Repairs

Repairs anticipated for the facility operation have been identified and considered as part of the FMEA. Facilitation of repairs consists of proper spare parts inventory, maintenance crew and select agreements for occasional off-site support.

Operation and Maintenance Manuals for all facility equipment are included in the Appendices of this O&M Manual.

9.9 Record Keeping

Checklist forms will be utilized to maintain maintenance records. These forms will be based upon the equipment maintenance needs, and will be done in concert with the Inspection Plan. Inspection and maintenance efforts will form a check and balance system that will be complementary and mutually supportive. In the case of damage repairs, a special record describing the damage and subsequent repair will be kept. In the case of off-site support needs, a descriptive record will also be kept. These records and the routine checklist forms will be maintained in a permanent file.

9.10 Maintenance Schedule

Maintenance schedules will be in accordance with procedures set forth by the various manufacturers as included in the maintenance manuals supplied for the equipment. These are included in the Appendices of this document.

10.0 FACILITY STAFFING PLAN

All employees must complete an Employment Application Form Exhibit 4, and be interviewed by the Plant Manager prior to employment. Upon being hired, the first day on the job, each employee will attend a mandatory orientation session in the on-site plant office. During orientation, employees will receive instructions on all plant operational procedures and be advised of all rules to be followed during routine and emergency operating situations. Ongoing monthly safety meetings and specialized training sessions, e.g. for the proper identification and handling of hazardous or potentially hazardous materials will be conducted. (See Section 11.0).

Employee wages and benefits are to be set using local prevailing wage rates and benefits as a guideline.

Job descriptions for each employee position are included as Exhibit 5.

Staffing for the MRF for single shift operation is estimated as follows:

Plant Manager	1
Assistant Plant Manager	1
Transportation Manager	1
Scale Clerk	2
Lead Operator	2
Front End Loader Operator	2
Pickers	16
Maintenance	3
Maintenance Helper	3
Forklift Operator	2
Truck Drivers	4

11.0 TRAINING PLAN

The personnel training program is directed by the Plant Manager. During the training program, employees are instructed in:

- Worker Safety and Health
- Safety Equipment
- Facility Operations
- Facility Maintenance
- Noise Monitoring
- Potential hazards and adverse environmental impacts associated with handling municipal solid waste.
- Monitoring of incoming waste materials.
- Identification and proper handling of unacceptable or potentially hazardous wastes.
- Proper handling and storage procedures for all waste types, including suspected hazardous substances.
- Fire Safety Procedures
- Emergency Procedures and the Emergency Contingency Plan.
- Record Keeping for inspections, maintenance and tests for appropriate personnel.

Training will be conducted on a continuous basis as part of monthly safety meetings. New employees will receive initial training as part of the orientation program.

As each employee completes the training program, a Certificate of Completion will be prepared and made part of the personnel records file.

Equipment supply companies will provide training for all equipment operators. Classroom training as well as actual operator training will be conducted at equipment company sites by qualified personnel. All equipment operators undergo such training prior to operating MRF equipment.

All personnel will receive training in the proper identification and safe handling of hazardous or suspected hazardous materials. Training will be conducted by personnel from a qualified firm.

Truck drivers, mechanics and equipment operators will undergo training provided by appropriate companies.

The local Fire Department will provide a fire safety training program.

All truck drivers and mechanics will be instructed by the truck vendor.

Computer training for office and scalehouse personnel will be provided by the vendor.

12.0 SAFETY PLAN

All plant operating and maintenance personnel will be provided with:

Hard Hats

Gloves

Safety Shoes/Boots

Safety Goggles

Dust Masks

Hearing Protectors

Uniforms

Other Safety equipment as specified tasks require

At the time of initial employee training and as followed up during monthly safety meetings, personnel will be knowledgeable and familiar with all safety and emergency procedures, equipment and emergency systems and procedures necessary to respond to such situations. These include:

- Procedures for using, inspecting and replacing all emergency equipment.
- Procedures for using communication equipment and alarm systems.
- Procedures for responses to spills, fires, etc.
- Procedures to follow in the event the facility must be shut down or evacuated due to an emergency, including evacuation routes.

All employees will be familiar with the Emergency Contingency Plan (Section 14).

All employees will know the local telephone number to report Fire or other Emergencies.

13.0 WASTE INSPECTION AND CONTROL PLAN

As has been indicated throughout this Manual, incoming waste is to be constantly inspected for suspected hazardous or unacceptable waste materials. The emphasis to this point has been on potentially hazardous materials.

The MRF's main function will be to recover paper, plastics, aluminum, ferrous metals and RDF from commercial and household wastes. To insure maximum recovery of these materials, inspection employees and picking personnel will be trained in every aspect of identification and proper routing of recoverables to the designated recovery areas.

Potentially hazardous wastes will be stored in a roll-off container until inspected and removed by a licensed hazardous waste transportation and disposal firm under contract to the facility.

Acceptable waste is limited to mixed municipal solid waste from commercial and residential generations. Only material delivered in solid waste collection vehicles will be permitted to utilize the facility.

14.0 EMERGENCY CONTINGENCY PLAN

The NC DEHNR Solid Waste Facility Permit requires: A Contingency Plan which delineates procedures for responding to various emergencies. Copies of the contingency plan shall be submitted to the local police and fire departments, hospital, and the local and county emergency response agencies.

The local Police, Fire Department and Health Officials have the right to immediate access to the facility. The Emergency Coordinator is the Plant Manager. Secondary Emergency Coordinator is the Assistant Plant Manager.

14.1 Fire

It is envisioned that the possibility of a fire could occur at any of the following locations:

1. In Hauler or MRF Vehicles prior to entering or after leaving.
2. In Hauler Vehicles on the Tipping Floor.
3. In Waste or Recovered Products within the MRF Building.
4. In MRF Transfer Vehicles in the Loadout Area.
5. In MRF Transfer Vehicles while en route to the EGF.

In case of fire event at locations 1 through 4, immediate notification procedures and actions to be taken are as follows:

Call Local Fire Department

Call NC DEHNR Regional Office

Actions: Location 1. Vehicles should discharge load onto a paved roadway. A front-end loader will be dispatched to spread the load to isolate material and reload after material is extinguished. If on-site, hoses and fire hydrants to be utilized. Locations 2 and 4, vehicles exit building and discharge load on paved roadway. Front-end loader and other procedures same as for 1. Location 3, front-end loaders isolate material while on-site hoses are used to quench material.

In case of fire event in MRF Vehicles en route to the EGF, driver of the vehicle is to immediately use the in-truck radio to call the MRF Base. MRF Base is to immediately notify the Emergency Unit in the Local Community where truck is at the time. All MRF vehicles will be equipped with hand held fire extinguishers.

14.2 Floods

In the event of flooding in the area of the facility, access to the site could be impaired.

In the event of access road flooding, operations will be curtailed.

In the event of floods or events which would impair facility operation for more than 1-day, the NC DEHNR will be notified.

14.3 Hazardous Substance Discharges

The facility is not permitted to handle hazardous wastes of any kind. This, however, does not preclude the possibility that some hauler may knowingly or unknowingly deliver a hazardous material to the MRF. As a safeguard against this, and to minimize the potential:

- Any vehicle suspected of carrying hazardous materials is to be pulled out of line and inspected by MRF trained personnel.
- If personnel find any evidence of a possible hazardous substance, the vehicle will not be allowed to unload and the NC DEHNR will be notified immediately, giving full particulars of the situation.
- If a vehicle reaches the tipping floor and during the process of unloading, it is discovered, that a hazardous or suspected hazardous substance has been discharged, the material will be isolated in the designated area. The NC DEHNR is to then be immediately notified.

To provide protection in the event of a spill, absorbent materials including sand and speedi-dri will be stored on-site in bags. A minimum of 500 pounds of each will be maintained. In addition, a roll of 4-mil polyethylene sheeting will be maintained on-site.

14.4 Peak Loadings

Due to various reasons, the facility may experience waste

loadings in excess of the estimated 1,400 tons per day average. Such peak loadings may result due to seasonal fluctuations, waste collection delays as a result of snowstorms or hurricanes, as well as potential emergency events. The facility has a maximum design capacity of 2000 tons per day.

In the event of peak loadings exceeding 2000 tpd, on-site working hours may be extended and personnel may be required to work overtime. Outside transfer trailer and dump trailer operators under agreement with Carolina to provide standby equipment and hauling services are to be notified by the Plant Manager to assure that required equipment is available.

In the event of backup of incoming waste at the facility, no waste will be unloaded unless there is room on the tipping floor. Incoming collection vehicles will be staged on-site until they can be unloaded in the building. In the event of inability to unload waste in the facility, trucks may be directed to bypass the facility and proceed directly to a designated backup landfill.

14.5 Evacuation Plans

Evacuation of the facility would be required in the event of a life-threatening emergency such as fire, explosion, major hazardous substance release or other public safety emergency either on the site or in the immediate vicinity. Depending on the nature of the emergency, incoming waste vehicles would be directed to a back-up landfill, all equipment would be parked and shut down as quickly as possible. The Emergency Coordinator

would provide instructions via the internal plant radio system. Non-essential personnel, or all personnel would be directed to a designated off-site secure area as directed by the Emergency Coordinator.

14.6 Amendments

Amendments to the Contingency Plan will be submitted to NC DEHNR, as well as the local police, fire and emergency response agencies whenever facility changes are made which modify the operation or have any impact on emergency preparedness, or in the event of key personnel changes.

14.7 Emergency Services Contacts

Section 8

OPERATION AND MAINTENANCE MANUAL
FOR THE
CAROLINA ENERGY, L.P.
RDF-TO-ENERGY FACILITY
WILSON, NORTH CAROLINA

DRAFT JULY 1994

NOTE: This draft O&M Manual is for a typical fluidized bed combustion system and is not site or vendor specific for the proposed Wilson Facility.

INTRODUCTION:

This manual has been prepared to serve as a guide in the understanding of the operation and maintenance of the Energy Generation Facility (EGF) and to provide assistance in operator training and familiarization.

This manual consists of the following sections:

1. Circulating Fluid Bed Boiler Description
2. Technical Data
3. Safety Precautions and Preparation for Operation
4. Operation
5. Maintenance

The entire facility is composed of many components manufactured by vendors other than the fluid bed manufacturer. This manual does not include details of the operation, maintenance and safety precautions of these components: the appropriate vendor data which will be presented in other volumes of the manual should be consulted in conjunction with the information contained in this volume of the manual.

1.0 Description:

1.1 The Boiler System:

The circulating fluid bed boiler system is used to produce superheated steam for driving a steam turbine generator and also process steam for use within the Du Pont Plant, by burning RDF-3 in a fluidized bed consisting of a mixture of RDF-3, RDF-3 ash, sand and limestone. The system consists of a circulating fluidized bed boiler supported by fuel and limestone feed systems, a balanced draft combustion air supply, a waste gas filtration system, a bed ash removal system and an instrumentation and control system. Sand is also provided for bed inventory control.

The design data for the complete plant including the boiler is given in Section 2.

1.2 The Fluidized Bed Combustor:

Fluidized bed combustion is used to accomplish the combustion of the RDF-3 in a manner that minimizes the emissions of pollutants such as oxides of nitrogen, oxides of sulfur, carbon monoxide, unburned hydrocarbons and solid particulate matter. The Circulating Fluidized Bed System incorporates the traditional combustion techniques of ensuring sufficient time, temperature and turbulence to complete combustion.

The turbulent nature of the circulating fluidized bed permits the oxidation of the fuel to occur at a temperature substantially lower than is traditional. The low temperature of combustion results in minimal formation of oxides of nitrogen and essentially eliminates slagging from the ash in the fuel.

The combustion advantages described above apply independently of the bed material. In the case of fuels containing little or no sulfur, sand may be used as the bed material. Where it is necessary to control sulfur emissions, limestone is used as bed material. The limestone reacts with the sulfur released from the fuel in the following steps:

A. Calcination of limestone

$$CaCo_3 \longrightarrow CaO + CO_2$$

B. Sulfation reaction

$$CaO + SO_2 + 1/2\ O_2 \rightarrow CaSO_4$$

The product, $CaSO_4$ is an inert substance known as gypsum.

The limestone is continuously reacted and therefore,it is necessary to continuously feed limestone with the fuel. The sulfation reaction requires that there is always an excess amount of limestone present. The amount of excess limestone that is required is dependent on a number of factors, such as the amount of sulfur in the fuel, the bed temperature and the physical and chemical characteristics of the limestone.

The particles within the fluidized bed are subject to abrasion by particle - particle contact occurring because of the solids circulation set up by the passage of gas bubbles within the bed. As these particles reduce in size, they will become small enough to be elutriated with the gas stream and collected by the baghouse. Those particles that do not readily abrade remain in the bed and must be periodically removed by the ash drain system.

The principle of the circulating fluidized bed system can be explained by examining the relationship between differential pressure and superficial gas velocity for a bed of particles (Figure 1). For a bubbling bed the log of differential pressure is approximately proportional to the log of gas velocity. As the gas velocity increases beyond the minimum fluidization velocity, the particles begin to expand and become fluidized and a distinct bed level is visible in the fluid bed. The differential pressure remains almost constant until the bed material begins to elutriate at the entrainment velocity of the bubbling bed. The degree of turbulent mixing continues to increase between the minimum and the entrainment velocity.

Beyond the entrainment velocity, the particles are carried out of the combustor and a continuous process is maintained by circulating the same amount of particles to the bottom of the reactor. The entrainment velocity marks the transition from a bubbling bed to a circulating bed. Beyond this velocity, the differential pressure becomes a function of velocity and solids recirculation rate.

The Kvaerner circulating fluidized bed system operates in the region between that of a bubbling bed and that of a circulating fluidized bed. This fluidization regime is characterized by high turbulence, solids backmixing, and the absence of a defined bed level. The entrained material with an average size range of 100 to 300 microns is separated by a cyclone or cyclones and returned to the bed by means of a non-mechanical valve or loopseal. Fuel is fed into the returning flow of solids and thence to the lower combustion chamber and primary air is introduced through the lower grid. because of the turbulence in the circulating bed, the fuel mixes quickly and uniformly with the bed material, rapidly gaining heat. Although there is no definite fixed bed depth, the density of the bed varies throughout the combustion chamber, with the higher density at the lower level where the fuel is introduced. Secondary air is introduced at various levels to (1) ensure solids circulation, (2) provide staged combustion air for NO_x reduction and (3) supply air for continuous fines combustion in the upper part of the combustion chamber. The fuel and limestone are stored in silos adjacent to the boiler house and are supplied directly to the fluidized bed combustor by variable speed controllers. Combustion air is supplied by the primary air fan to the fluidized bed to suspend the fuel and limestone in a fluidized state. The fuel burned in this fluidized state generates heat for the combustion chamber water wall steam and water circuits and the resulting steam is used to drive the steam turbine and generate electrical energy.

The combustion product gases, drawn from the boiler by the induced draft fan, are cleaned by the hot cyclone and the baghouse filter and discharged to atmosphere through the stack. The circulating fuel and limestone are collected by the hot cyclone and recycled back to the fluidized bed to maximize combustion efficiency and enhance limestone utilization.

The spent bed material is removed from the bed during operation. It is drawn through the ash cooler inlet pipe, cooled in the ash cooler and transported to the ash storage silo.

Engineering flow diagrams which show the flow of material through the operating fluidized bed system are illustrated in the following figures: Fuel, Limestone and Ash System Fig. 2, Air and Flue Gas System Fig. 3, Water and Steam System Fig. 4 and Gas Burner System Fig. 5.

1.3 Circulating Fluidized Bed Boiler:

This unit is a natural circulation, circulating fluidized bed steam generator and shown in figure 6. It consists of a primary air windbox and air distribution grid, a combustion chamber, hot cyclones, a superheater, an evaprorator and an ecomomizer. A steam drum to separate the steam from the water is located above the combustor and convection enclosure.

The fuel feed system consists of a gravimetric feeder which meters the fuel into the fuel feed rotary valve. RDF-3 is then fed into the combustion chamber via the solids return non-mechanical valve. Primary combustion air enters through the air distribution grid which supports the bed material. Secondary air enters through the upper and lower secondary air nozzles in the lower combustion chamber.

The fluidized bed consists of limestone, sand and fuel and their products, suspended and constantly mixed above the air distribution grid. The fluidizing air is forced through the nozzles in the grid by the primary air fan system. Combustion of the fuel raises the temperature of the bed and heat is transferred to the heat transfer surfaces to raise steam. SO_2 is captured by the calcium oxide produced from the heated limestone. By modulation of the fuel air ratio, the temperature of the combustion chamber is controlled. Variation of this ratio allows for a wide range of load change capability while keeping the bed temperature within the range for optimum sulfur capture.

Flue gases and very fine particles rise through the upper combustion chamber and flow into the cyclones at the rear wall of the combustion chamber. The gases flow upward through the cyclone outlet and pass through the superheater, evaporator and economizer. From there the gases travel out of the boiler and into the baghouse.

A burner is located in the combustion air duct upstream of the windbox. This provides sufficient heat to the incoming air during start-up to increase the temperature of the primary air to approximately 600°F.

Start-up burners are located in the lower combustion chamber provide heat at start-up to bring temperatures in the combustion chamber to fuel ignition temperature.

Limestone is fed to the bed through two openings: one in the back wall and one in the non-mechanical solids return valve.

Bottom ash is discharged through drain outlet pipes and valves to the water cooled bottom ash screw conveyor. The bottom ash is cooled as it passes through the conveyor and transported by means of a pneumatic conveyor to the ash silo.

A more detailed description of the operating components of the steam generator is given in subsequent sections of this manual.

1.3.1 Water and Steam Flow:

The water/steam circuit consists of the following.

a. Economizer
b. Steam drum
c. Downcomers
d. Evaporator
e. Combustion chamber water walls
f. Convection chamber water walls
g. Superheater

The economizer is located in the flue gas stream between the evaporator and the baghouse. Flue gas flows through the economized from top to bottom. The feedwater enters at the bottom header, flows up through the tubes to the top header from which it is directed to the steam drum by riser tubes.

The steam generating circuitry consists of the economizer tubes, the evaporator tubes, the convection chamber and the combustion chamber water walls. The saturated steam collected in the steam drum is directed to the superheat tubes where the required degree of superheat is provided by the transfer of heat from the flue gas to the superheater banks.

Downcomers direct the water in the steam drum to the evaporator, the enclosure water walls and the combustor water walls inlet headers. The heated steam water mixture is collected in the outlet headers and returned to the steam drum via riser pipes.

1.3.2 Air and Gas Flow:

The Kvaerner boiler is a balanced draft unit, utilizing an induced draft fan to maintain a neutral draft at the top of the combustion chamber. There are two main sources of combustion air: Primary Air and Secondary Air. Boiler room air is drawn into the system through the primary and secondary air inlet ducts, which take the warm inlet air through screened inlets at approximately 75 foot elevation. Each inlet duct has a venturi section to measure the air flow rate.

The primary air fan provides the air for fluidization, the fuel combustion, the non-mechanical seal and limestone transportation. Approximately 85% of the primary air flows into the system through the windbox. This air can be heated by a duct burner that is located just upstream of the windbox. From the windbox the air enters the combustion chamber, at increased velocity through the air distribution grid. The balance of the air enters through the limestone feed and the non-mechanical seal. Primary air flow is modulated by the primary air fan inlet damper.

The secondary air fan provides air to the start-up burner, upper and lower secondary air nozzles and fuel feeding. Flow is controlled by the secondary air fan inlet damper and the start-up burner damper and the upper secondary air damper.

Within the combustion chamber, primary and secondary air mix with the fuel and limestone to facilitate combustion and sulfur capture. Gases of combustion along with elutriated fines then flow upward through the upper combustion chamber and into the cyclones, where the fine solid particles are separated from the flue gas and returned to the lower combustion chamber. The flue gas and remaining fines are then pulled through the boiler convection sections for heat transfer and through the baghouse for final particulate control. Gases exiting the baghouse are drawn through a control damper by the induced draft fan and then sent up the stack to atmosphere. Instrumentation is provided throughout the system as required to provide control for oxygen level, pressures and flows.

1.3.3 Economizer:

The economizer is of the plain tube horizontal serpentine type arranged in banks. The economizer cools the flue gas as it flows from the evaporator to the baghouse. The flue gas flows downward across the tube surface and the water is in counter flowing inside the tubes from bottom to top. The inlet and outlet headers have the necessary connections for venting, draining, feed stop and feed check valves. The economizer is enclosed in a gastight steel casing.

1.3.4 Evaporator:

The evaporator is of the plain tube horizontal serpentine type of similar arrangement to the economizer. The lower inlet header is fed by downcomers from the steam drum and the steam water mixture is returned to the drum by means of riser tubes.

The evaporator is located in the convection enclosure which is of membrane construction and located immediately after the cyclones. The convection enclosure is also fed by downcomers from the steam drum.

1.3.5 Superheater:

The primary superheater is of the plain tube horizontal serpentine type arranged in two banks welded to inlet and outlet headers. The secondary superheater is a single bank plain tube horizontal serpentine type.

Both the primary and secondary superheaters are located in the convection cage which is of membrane construction. The convection cage receives water from the steam drum supplied by downcomers.

1.3.6 Desuperheater:

A desuperheater station is located between the primary and secondary superheaters. The desuperheater is of the venturi spray type capable of controlling the final steam temperature to within +/- 10°F. The spray venturi is mounted in the superheater piping and the temperature controllers are positioned at a sufficient distance to ensure satisfactory operation. Spray water will be supplied from a separate connection to the feedwater system.

1.3.7 Steam Drum:

The steam drum is located above the convection enclosure. The steam drum serves as a water reservoir for the steam generating circuits. The drum contains steam separating equipment and internal piping for distribution of chemicals to the water, for distribution of feedwater entering the drum and for blowdown of the water to reduce solids concentration.

Figure 6 shows the arrangement of the steam drum internal components. An internal baffle extending almost the full length of the shell forms a chamber above the waterwall risers. The steam/water mixture entering the drum in this chamber pass through the steam separators where the first stage of steam separation is accomplished. As the steam/water mixture enters the drum through the risers, the water wall upper headers and tubes, this baffle slows the flow and directs it to the bottom of the drum.

The separated steam flows out through the top of the baffle arrangement and passes through the demister where the final separation of the moisture in the steam is accomplished as the steam comes in contact with the perforated plates in the assembly. Steam enters the demisters at low velocity and makes several abrupt changes in direction of flow. This causes the entrained moisture to adhere to the large surface area presented by the plates. The water film then drains by gravity to the lower part of the drum. The separated steam flows through the dry pan and leaves the drum through the steam pipe at the top.

1.4 Fuel System:

A fuel feed system is provided to supply the RDF-3 to the combustor. The system consists of a surge bin and slide gate valve, a gravimetric feeder and a rotary valve mounted on top of the non-mechanical seal. RDF is fed by gravity from the surge bin to the feeder and can be shut off by the slide gate. The feeder is electrically driven and controls the rate at which the RDF is supplied in response to the boiler master signal. The function of the rotary valve is to isolate the positive pressure and heat of the combustor from the fuel feed system. The feed point at the solids return non-mechanical valves has been selected to obtain good fuel feed distribution by mixing the fuel with the solids returning from the cyclones.

1.5 Limestone Feed System:

The limestone feed system consists of a storage silo, a slide gate to shut off the supply and a volumetric feeder which controls the flow of limestone to the combustor. The limestone falls by gravity to a splitter which feeds it pneumatically to the combustor at two locations.

1.6 Sand Feed System:

The sand feed system consists of a storage silo and a slide gate. The sand falls by gravity to the combustor. The sand feed is used to maintain the solids inventory within the combustor. Sand is added to the combustor when the primary air pressure drop falls below a predetermined set point and it is done manually.

1.7 Non-mechanical Valve (Loopseal):

1.7.1 Principle of operation:

The loopseal is a non-mechanical seal that isolates the cyclones (negative pressure) and the lower combustion chamber (positive pressure). The principle of the loopseal is virtually identical to the trap on the common sink drain. The positive pressure in the combustion chamber is not sufficient to push the bed material over the loopseal down leg and the negative pressure of the cyclones is not sufficient to draw the bed from the combustor. An adequate seal is developed to isolate the two systems.

1.7.2 Air Supply and Control:

The lopseal is supplied with air lances that fluidize the accumulated particles and thereby promote flow to the combustion chamber. The air is provided by the primary air fan through the loopseal air control manifold and control rack. Valves are set at the time of initial system start-up to provide the correct flow rate to each lance. Each lance also has a check valve and air flow rotometer, all mounted at the loopseal air control manifold.

1.8 Bed Material Removal System:

The spent bed material removal system extracts and cools the bad material at a rate required to maintain the proper bed material inventory. The system consists of a dome valve, water cooled screw conveyor and pneumatic transport system to convey the ash to the storage silo.

1.9 Gas Burner System:

The boiler gas burner system consists of a duct burner and start-up burners. The system is described in detail in section 1.12-J.

1.10 Sootblower System:

The superheater, the evaporator and the economizer banks are fitted with sootblowers. They are of the fixed position type, having 360° rotation. Steam is used as the blowing medium. In the event that flyash particulate buildup occurs of the gas side of the generating tubes during operation, the sootblower sequence is initiated by the operator to dislodge and remove the particulates.

The sootblower system is supplied complete with all piping, valves and instrumentation required for it to function automatically through its control circuits.

1.11 Operating Philosophy:

Because the Circulating Fluid Bed (CFB) does not have a fixed bed depth, turndowns of sufficient magnitude are possible to quickly follow plant load demand, while maintaining the process temperatures and pressures within the acceptable operating parameters.

from the standpoint of combustion stability and NO_x emission levels, the maximum theoretical bed temperature variation is from 1200°F to 1750°F. However, the optimum range of bed temperature for SO_2 capture is much more stringent, 1500°F to 1550°F. Outside the optimum range significant increases in limestone feed rated (Ca/S ratio) are required to maintain emission levels within acceptable limits. For units burning low sulfur fuels where a high Ca/S ratio can still result in acceptable limestone feed rates and not more than 80% SO_2 reduction is required, a wider variation in bed temperature, 1450°F to 1650°F, is acceptable. For units burning high sulfur fuel, the bed temperature should remain within the optimum range for SO_2 capture, or for more flexibility in rate of load change, within the temperature range 1400°F to 1600°F required for economic limestone usage. This is accomplished by the design of the Kvaerner Boiler.

Typically, a fluidized bed unit utilizes limestone as the predominant bed material, with smaller amount of fuel, sand, ash and impurities (e.g. rocks) present. Fresh limestone enters the combustion chamber and, in the presence of operating temperatures, calcines (gases liberated), then absorbs SO_2 from the burning fuel which sulfates the limestone (converts limestone to gypsum). During the calcined stage, the limestone is physically weak and can be easily decrepitated into finer particles which would then be carried out of the bed (elutriated) by the furnace draft. With a fuel sulfur content of about 2.5% or greater, sufficient SO_2 is produced during combustion that the limestone from the decrepitation and elutriation (limestone attrition) is balanced by the flowrate required for sulfur capture. A low fuel sulfur content on the other hand can lead to loss of limestone through attrition, which must be compensated for by either increased limestone feed to maintain bed inventory or, sand can be used to make up the balance.

1.12 Overview of Controls and Instrumentation:

The control and instrument system is shown symbolically by figures 3, 4, 5 and 6. The following is a description of the operation of the combustion control system and the safety interlock system that is necessary for proper operation of the boiler.

1.12.1 Combustion Control System:

The combustion control system is composed of the following TBD analog feedback control loops.

A. Boiler master demand

The purpose of the control loop is to develop a control signal representing the required boiler response to achieve a balance of the boiler heat input to the process load. the required boiler energy output is composed of the actual steam flow plus the degree of offset in the energy balance due to the change in output steam pressure from set point.

The boiler total steam flow at design conditions of pressure and temperature represents the boiler load to process and therefore is utilized to develop the Btu requirement of the fuel input requirement of fuel input requirement prior to a measured steam pressure variation from set point. Many factors affect the relationship between the boiler Btu output and fuel input and hence cause the steam pressure to vary from set point.

B. RDF-3 Feed Control

The purpose of this loop is to maintain fuel flow to the bed in balance with load demand and air flow and to prevent bed temperature from exceeding minimum and maximum temperature limits. To accomplish this objective, measurements of air flow, boiler master demand, bed temperature and fuel flow are compared and the resulting signal is used to modulate the fuel feeder speed.

The boiler master demand is the primary set point of the fuel flow proportional plus integral controller. However, if the measured air flow signal is of a lower value than the bed master demand signal, a low signal selector selects the measured air flow signal as the set point, thereby preventing excessive fuel flow versus air flow.

Any average bed temperature excursion beyond either high or low temperature limits will cause an immediate inverse proportional change to the fuel flow set point signal. The fuel mass flow rate signal is developed from the measurement of weight and speed signals from the gravimetric feeder.

D. Limestone Feed Control

The function of this loop is to supply sufficient limestone to the bed to maintain the sulfur dioxide emission below allowable limits.

This is accomplished by the controller which utilizes measurements of fuel flow, limestone flow, and SO_2 content of the stack gases.

Measured fuel flow, which represents the rate at which sulfur is being introduced into the bed, is used as a ratio for the set point for the limestone controller. The stack SO_2 signal is used to trim the limestone feed command signal.

E. Lower Combustion Chamber Temperature Control

The purpose of this loop is to maintain bed temperature at its prescribed value based on load demand. Three thermocouples are located in the lower combustion chamber to monitor temperature and each has a corresponding temperature transmitter. Signals from the three elements are averaged to produce an input signal to the bed temperature controller, air flow control loop, and to a high/low temperature alarm in the control circuit.

Two thermocouples are located in the upper combustion chamber which provide input signals for the control system for hi/low alarms.

Output signals from the bed temperature controllers are input into the secondary air control loop, which modulates secondary air flow for temperature control.

F. Lower Combustion Chamber Pressure Control

The purpose of this loop is to maintain the proper bed inventory. The amount of bed material in the unit is measured by the pressure present in the lower combustion chamber, which is accomplished by two pressure taps. These values are averaged.

It this average value is above the operator established set point, ash is admitted to the ash cooler for removal. The rate of removal from the ash cooler is controlled by the speed of the ash removal screws, which is also controlled by the lower combustion chamber pressure.

When the pressure in the lower combustion chamber returns to the predetermined level, the ash screw speed is reduced and ash introduction to the cooler is halted.

If the average value is below the operator established set point, sand is admitted to the bed.

G. Feedwater Control

This loop is designed to supply feedwater to the boiler at a rate to replace the steam flow output and maintain the water level in the steam drum at the desired value. Measured steam flow is the major contributor to the set point for this control loop and this is trimmed by the error between the drum level set point and its measured value. A feedback of the measured feedwater flow completes this loop. This scheme is referred to as "three element feedwater control".

H. Combustor draft control

The purpose of this loop is to maintain the furnace pressure within a narrow band about the set point and prevent damage due to excessive furnace pressure excursions. Measured furnace draft is compared to the set point and the error drives the controller to position the induced draft fan inlet control vanes. A measurement of the combustion air flow from the primary and secondary fans provides a dynamically compensated feed forward signal for this loop.

I. Burner Controls

1 System Operation Philosophy

The burner system is comprised of two independent subsystems, duct burner system and start-up burner system. In order to initiate any of the burners, the following purge procedure must be performed.

All the main interlocks must be proven to initiate a purge and a purge credit, of four volume changes, must be established to maintain a furnace ready condition. Following a furnace ready condition, the start-up burner and the duct burner may be brought on line. If the start-up burner or duct burner fails to light off, an additional purge of one volume change is required before a retry. The interlock and purge logic is shown on Figure (Later).

The purge time for four volume changes is _____ minutes. This was calculated with a primary air flow of _____ACFM and a secondary air flow of _____ ACFM. The total volume from the combustion chamber to the stack is _____ cu.ft.

The time for one volume change is _____ minutes.

2. Duct Burner Controls

This loop controls the operation of the duct burner.

The duct burner is located in the primary air ducting before the windbox plenum. The burner is gas fired and designed for operation within a process air duct. The burner rating is _____ MMBtu/hr with an igniter rating of _____ KBtu/hr. The gas flow to this single burner is automatically modulated to maintain the desired windbox inlet temperature. A high temperature switch is provided to override the gas flow controller and trip the burner on high outlet air temperature. The burner may be started or locked out from either a local control panel or the control room.

The main gas train contains a pressure regulator, pressure indicator, flow transmitter, low gas pressure switch, two safety shut-off valves with vent valve, safety valve test points, modulating valve with low fire position switch and high pressure switch. The igniter gas train contains a separate gas pressure regulator, pressure indicator, two safety shut-off valves with vent valves and safety valve test points. The igniter is of the intermittent type and thus a single flame scanner is used for detecting either the pilot or main flame. The flame scanner is a Honeywell type C7012 with flame relay R4075. An observation port is provided to permit visual inspection of the pilot and main burner flames.

The burner management system, logic diagrams, monitors and interlocks gas pressure, furnace ready condition, flame failure, local and control room STOP/ON/START stations, control valve low fire position, igniter valves and igniter and main gas valve position.

The duct burner will be the first burner to start up in a start-up, sequence following a furnace purge. The OFF/ON/START switch must be ON at both the control room and the local station. A start is initiated at either location by switching to START and releasing back to ON. The duct burner must be proven in the low fire position before a start is allowed. The burner will then start on request if the remaining burner management interlocks are satisfied. Once a start is initiated, the igniter train is energized and a flame must be proven within 10 seconds. On proof of igniter flame, the main gas train is energized and 10 seconds later the igniter train is de-energized to prove main flame. Following proof of main flame, the burner is released to the combustion control system. The firing rate is trimmed to maintain the burner outlet air temperature at the desired set point.

Excess combustion air is maintained at all firing rates; therefore the control system modulates the gas flow to adjust the firing rate.

3. Start-Up Burner Controls

This loop controls the operation of the start-up burners.

The retractable start-up burners are located in the combustion chamber front and rear walls. The burner is gas fired with automatic controls for modulating the combustion air damper and gas flow control valves. The burners are rated at 40 MMBtu/hr each and the igniter rating is 1.25 MMBtu/hr. Combustion air is furnished from the secondary air fan, via a separate circuit. A flexible metallic hose with a quick release coupling and automatic shutoff, connects the burner to the main gas train.

The main gas train contains a pressure regulator, pressure indicator, flow transmitter, low pressure switch, two safety shutoff valves with vent valve, safety valve test points, modulating valve with low fire position switch and high pressure switch. The igniter gas train contains a separate gas pressure regulator, pressure indicator, two safety shutoff valves with vent valve, safety valve test points. The igniter is of the intermittent type and thus a single flame scanner is used for detecting either the pilot or main flame. The flame scanner is a Honeywell type C7012 with flame relay R4075. An observation port is provided to permit visual inspection of the pilot and main burner flames.

The burner management system, logic diagrams, monitors and interlocks gas pressure, gun in place, burner position, furnace ready condition, flame failure, local and control room STOP/ON/START stations, control valve low fire position, igniter valves and igniter and main gas valves position.

The start-up burner will be second following the duct burner in a start-up sequence. The OFF/ON/START switch must be ON at both the control room and the local station. A start is initiated at either location by switching to START and releasing back to ON. The start-up burners must be positioned and proven in the low fire position before a start is allowed. The burner will then start on request if the remaining burner management interlocks are satisfied. Once a start is initiated, the burner is inserted, the igniter train is energized and a flame must be proven within 10 seconds. On proof of igniter flame, the main gas train is energized and 10 seconds later the igniter train is de-energized to prove main flame.

Following proof of main flame, the burner is released to the combustion control system. The operator establishes the firing rate at a master set point station. The combustion control system uses cross limited air and fuel flow controllers to ensure excess air conditions are maintained at all firing rates.

J. Sootblower Controls

The sootblower loop provides for an automatic system which warms up and drains the system, operates the blowers, then shuts the system down, leaving the atmosphere drain valve open.

The signal to start sootblower sequence is initiated by the operator at the main control room via the computer console. This action opens the system warmup valve allowing a low rate of steam flow to circulate through the system. The atmospheric drain remains open during this warmup period.

After six minutes, the main sootblower steam admission valve opens and the atmospheric valve closes. The system remains in this position for four minutes during which time it is intended that all condensate is expelled form the system and the steam becomes dry. The condensate travels to the high pressure drain system via the steam trap.

At ten minutes, the timer for sootblower #1 makes for 8 seconds, initiating operation of the blower, provided that the local selector switch is in the "on" position. The blower completes its cycle operating through its internal limit switch.

The sootblowers are interlocked to prevent operation of more than one blower simultaneously.

The remaining blowers will then operate in sequence provided that their respective local selector switches are properly positioned, after a lag time of approximately 30 seconds.

When all of the blowers have operated, the sequence directs all valves back to the starting position, closing the warmup valve, main sootblower steam admission valve and opening the drain valve.

1.12.2 Safety Interlock System:

The following binary logic interlocks are provided to insure the proper sequence and timing of equipment operation and prevent operation that could damage the equipment.

A. Induced Draft Fan Control

The following permissives are required for the ID fan to operate:

Low fan inlet pressure
Open boiler path from baghouse
ID fan inlet damper closed
The stop switch not initiated
The start switch is initiated

B. Primary Air Fan Control

The following permissives are required for the PA fan to operate:

Primary air fan inlet vanes closed
The stop switch not initiated
The start switch is initiated

C. Secondary Air Fan Control

The following permissives are required for the PA fan to operate:

Secondary air fan inlet vanes closed
ID fan running
The stop switch not initiated
The start switch is initiated

D. Boiler Purge Control

A boiler purge is required if 1. the unit is being started from cold, or 2. MFT occurs and the bed temperature is less than 1400°F.

ID fan running
Primary air fan running
Secondary air fan running
Main fuel trip reset
Instrument air pressure greater than minimum **(TBD)**
Flue gas temperature less than 1830°F
Primary air flow greater than minimum **(TBD)**
Start-up burner gas safety shutoff valve closed
Total air flow greater than purge requirement **(TBD)**

E. Fuel Master Trip (MFT)

A master fuel trip will occur when the unit is in operation, and the primary air fan is in operation, any one of the following conditions occur:

Bed temperature less than 1200°F
Drum pressure higher than maximum **(TBD)**
Drum level less than minimum **(TBD)**
Furnace pressure higher than maximum **(TBD)**
MFT switch is initiated

The MFT is reset by initiating the MFT reset switch.

It is necessary to re-purge the boiler and start up the boiler by satisfying all interlocks after the cause of the MFT has been identified and rectified.

F. Fuel Feeder Control

The following permissives are required for the RDF-3 feeder to run:

The stop switch is not initiated
The start switch is initiated
Bed temperature is over 1000°F
Fuel feeder internal trip is not initiated
Feeder is in remote operation (local panel)
Rotary valve is in operation
Primary air fan is in operation
No MFT exists

G. Fuel Rotary Valve Control

The following permissives are required for the rotary valve to run:

The stop switch is not initiated
The start switch is initiated
Valve speed is greater than minimum setting

H. Limestone Feeder

The following permissives are required for the limestone feeder to run:

The stop switch is not initiated
The start switch is initiated
Local panel on auto
Primary air fan is running
Limestone rotary valve running
No inverter fault exists

I. Limestone Rotary Valve

The following permissives are required for the limestone rotary valve to run:

The stop switch is not initiated
The start switch is initiated
Valve speed is greater than minimum setting

J. Ash Cooler Control

The following permissives are required for the ash cooler to run:

Primary air fan running
Primary air pressure must be more than **(TBD)**
Cooling water flow to screw feeder more than **(TBD)**
Start button energized
Stop button not energized
Dome valve opened

1.13 Auxiliary Equipment:

The following equipment is an integral component of the fluidized bed boiler system. The manufacturer's instructions for the installation, operation and maintenance of this equipment are contained in subsequent volumes of this manual. The vendors manuals are indexed under the following tabulated system.

Note: in the following list, the specific manufacturer's of the equipment will be added to this manual at a later date when actual vendors have been selected.

	Item Supplied By
1.13.1 Water and Steam Flow	
Safety Relief Valves	
Superheater	
Boiler	
Feedwater Control Valve	
Combustion Chamber	Kvaerner
Superheater	Kvaerner
Evaporator	Kvaerner
Economizer	Kvaerner
Water and Steam Hand Valves	
Water column Assemblies	

Item Supplied By

1.13.2 Air and Gas Flow

Primary Air Control Inlet Vanes
Secondary Air Control Inlet Vanes
Induced Draft Fan Dampers

1.13.3 Expansion Joints

Expansion Joints

1.13.4 Fuel Feed Equipment

Gravimetric Feeder
Fuel Rotary valve

1.13.5 Limestone Feed System

Limestone Volumetric Feeder
Limestone Rotary valve

1.13.6 Burner system

Burner System

1.13.7 Sootblower System

Sootblowers

1.13.8 Variable Speed Drives

Variable Speed Drives

2.0 TECHNICAL DATA:

This complete section will be added when the final design of the boiler has been finalized.

3.0 SAFETY PRECAUTIONS AND PREPARATION FOR OPERATION

3.1 Safety Precautions:

The following instructions are some of the general precautions which apply when placing a boiler into operation. They are intended to supplement the experience and judgment of those in charge of operation and cannot cover all precautions which should be observed. It is incumbent upon the owner to provide boiler operators fully qualified and where required licensed in the art and science of boiler operation.

The manufacturer has complied with ASME boiler code pertaining to the design and fabrication of the boiler. A newly erected boiler, prior to being placed in operation, must be carefully inspected to assure that all component parts are properly assembled.

It is the purchaser's responsibility to see that the unit has been inspected and approved by his insurance inspector.

All auxiliary equipment must be in first class operating condition and suitable for operation at design conditions and operated inn accordance with the manufacturer's recommendations and instructions.

2.1.1 Start-Up Checklist - Initial Operation:

When preparing a new unit for service, it is important to ensure that the following are done as required:

A. The drum level gage glasses must be checked and installed in accordance with the drawings prior to preliminary operation. When the water level in the drum is lowered below the lowest visible point of the gage glass, all water should drain out of the glass. Any time a repair or change is made to the gage glass, this should be checked.

B. Blowdown lines from the water column and gage glasses must be properly piped and drain valves closed. The gage glasses must be properly illuminated and clearly visible to the operator from the operating floor.

C. All vent, drain and blowdown lines must be readily accessible and properly piped to a blowdown tank or other safe location so as not to endanger the operator at any time.

D. Valves that are located between the steam drum and the water column must be in the full open position and locked.

E. All safety valve gags and hydrostatic test plugs must be removed and the valves must be in proper operating condition. Discharge pipes and drains must be arranged and supported in accordance with the safety valve manufacturer's recommendations.

F. drum internals must be properly installed in accordance with drawings to assure that there will not be any steam bypassing the internals.

G. All test connections deemed necessary must be installed.

H. Ensure that the ductwork is clean and free from foreign matter.

2.1.2 Start-up Checklist - Subsequent operation

In addition to the above, the following items should be thoroughly checked each time the steam generator is placed into operation:

A. All necessary operating instruments, both permanent and temporary, must be installed, operating properly and correctly calibrated.

B. All areas must be sufficiently illuminated.

C. No hazardous walkways, ladders or stairways should be used. Provide substantial walkways and platforms where needed.

D. Air and gas passages must be free from obstruction and the unit capable of being thoroughly purged by the circulation of air through the unit.

E. The source of feedwater must be ample and uninterrupted once the unit is in operation.

F. An ample fuel and limestone supply should be available.

G. All access and observation openings must be closed after it is ascertained that no one is inside the unit.

H. Drum manway openings must be closed and properly made up.

I. Check rotation of all motors.

J. Ensure operation of all valves.

When it is assured that the above precautions are fully understood and have been complied with, then and only then, should subsequent operations such as "Drying Out", "Boiling Out", "Initial Starting" and "Normal Starting" be initiated.

3.2 Hydrostatic Test:

The boiler shall be subjected to a hydrostatic test when erection of the pressure parts is complete. A hydrostatic test shall also be made upon the completion of each general overhaul or repair affecting any pressure part of the unit, or at other times when it is desirable to inspect for leaks.

CAUTION

THE BOILER TO BE HYDROSTATICALLY TESTED SHALL BE FILLED WITH TREATED WATER.

If the unit is not to be placed into service after the test, treatment shall be with hydrazine in the range of 200 to 300 ppm plus sufficient ammonia or morpholine to raise the pH to 10. If the unit is to be placed into service within a short time using the test water, the treatment may be as for normal operation. It is strongly recommended that the unit be filled from the demineralized water or condensate system for the test.

Refer to the Contract Section to determine the quantity of water required for the hydrostatic test.

Insurance Company regulations, ASME and other codes and inspection requirements, usually specify that the unit shall be subjected to a hydrostatic test pressure of one and one half times the design pressure. This is the initial hydrostatic test to be applied upon completion of erection of the new installation and prior to initial operation of the unit.

Before applying a hydrostatic test on the unit, make a thorough internal and external inspection to be absolutely sure that:

A. All foreign matter and tools have been removed.

B. No one is inside the unit.

C. Two pressure gages have been correctly calibrated by dead weight tests and are connected properly with valves open, on the drum outlet piping.

D. Any part not designed to withstand the hydrostatic test pressure needs to be properly isolated or blanked off from such pressure. Telltale drains should be left open outside the boundaries of the hydrostatic test to check for isolation valve leaks.

E. All safety valves are blanked of gagged if the hydrostatic test pressure is near or will exceed the lifting pressure of any safety valve.

F. All valves operate freely and seat properly.

When the foregoing have been checked carefully:

A. Verify that drum manways are properly closed.

B. Close stop and check valves, all drain and blowdown valves, and valves to any gages or other integral equipment not designed to withstand the hydrostatic test pressure.

C. Open vents on the highest points of each component part of the unit.

D. Be sure that the water will not freeze during the test and that the unit will not be subjected to freezing conditions following the hydrostatic test.

E. Check that only authorized personnel are in the vicinity of the unit to be tested.

F. Do not apply gags to safety valves until 80 to 90% of the set point pressure is obtained. Conversely, remove them again when the test pressure has been reduced to 80 to 90% of the set point pressure. This procedure protects the seating surfaces of the valve and prevents excessive pressure on the valve stem. **REFER TO SAFETY VALVE MANUFACTURER'S INSTRUCTIONS.**

Start filling the boiler with water, which should be relatively close in temperature to that of the pressure parts. The final temperature of the drum metal and water should be at least 90°F before applying the hydrostatic test pressure. All pressure parts must be at a temperature of not less than 70°F.

CAUTION

THE MINIMUM METAL AND WATER TEMPERATURE OF 70°F MUST BE OBSERVED IN INSURE THAT HYDROSTATIC TESTING IS PERFORMED ABOVE THE BRITTLE TO DUCTILE TRANSITION TEMPERATURE OF THE METAL.

To obtain this hydrostatic test temperature, the following procedures are recommended (items A or B).

A. **IF THE DUCT BURNER SYSTEM IS NOT FUNCTIONING (AS MAY BE THE CASE FOR INITIAL HYDROSTATIC TESTING), ANY ONE OF THE FOLLOWING METHODS (1), (2) OR (3) IS RECOMMENDED.**

1. Fill and circulate the water, heated from an external source to obtain the recommended minimum temperature.

2. If available from another source (another unit at jobsite), connect a saturated steam supply to the drum blowdown or chemical feed line to heat the water and drum shell. Start out with the drum at normal operating level and heat the water to a temperature 5°F to 10°F above the desired temperature so that subsequent water addition does not lower the final temperature below the recommended minimum.

3. Use small oil and/or gas burners to raise the temperature to that recommended. **The burner flame must be kept away from the boiler tubes.**

4. Proceed to fill and pressurize as in method B.

B. **IF THE DUCT BURNER SYSTEM IS FUNCTIONING, THE FOLLOWING METHOD IS RECOMMENDED:**

1. After filling the boiler to normal water level, fire the duct burner to raise the drum temperature to 5 to 10°F above the recommended temperature. Extinguish fires and continue to fill the boiler.

2. Inspect the drains and manways for leaks as the boiler fills. Close the high point vents when water issues from them.

3. Raise the pressure to the intended figure slowly to avoid shock. The recommended rate of pressure increase should not exceed 50 psi per minute.

4. At 80 to 90% of the safety valve popping pressure, install the safety valve gags hand tight. Continue to raise pressure to the desired value.

5. Continue raising pressure until the required pressure is reached. Then reduce the pressure slowly and thoroughly inspect the boiler for leaks only at the operating or design pressure. When the inspection is completed, release the pressure slowly, open vents and drains. All drainable portions of the unit not intended to contain water during operation must be drained.

6. If during initial hydrostatic test, temporary manway gaskets were used, they are to be replaced with proper gaskets before refilling the unit for operation.

7. Remove blanks or gags from the safety valves after the test has been completed and pressure has been reduced to below the operating pressure.

3.3 Curing of Refractory:

It is recommended that an outside contractor such as Cooperheat be used for the refractory cure, to prevent possible refractory problems from occurring during normal boiler operation.

The selected refractory vendor's recommendations and refractory curing rates must be strictly adhered too.

Actual curing rates and recommendations will be provided later.

3.4 Boiling-Out:

2.4.1 General:

Oils and grease are put on boiler parts for the purpose of providing protection during fabrication and storage of tubes and other pressure parts for extended periods of time. Boiling-out is the process of chemically cleaning for the removal of the oil and grease, usually with a strong alkaline solution.

The presence of even fairly thin films of oil or grease or their decomposition products on the boiler heating surfaces will seriously retard heat transfer. This film acts as a dangerous heat insulating film and retards the rapid transmission of heat from the metals to the boiler water. The resultant increase in metal temperatures may be sufficient to cause overheating and blistering of the boiler tubes and ultimate failure at high loads.

Oils and other organics can lead to foaming of the water in the drum, leading to impure steam.

During the boil-out process, the gage glasses may become badly discolored and permanently etched. Thus replacement kits for all gage glasses should be readily available before the start of boil-out. Restore the inoperable gage glass to its original condition after boil out and chemical cleaning and before the next filling of the boiler with treated water. The gage glass manufacturer's instructions should be consulted for the identification and ordering of kits, and the replacement procedure.

Where a feedwater consultant has been retained, it is recommended that his advice on chemical dosages be obtained. However, where this service has not been solicited, the use of one of the several proven procedures listed herein is suggested.

The chemicals should be dissolved in water before adding to the boiler and should never be added to the boiler in solid form. In handling caustic materials care should be exercised to avoid contact with the eyes, skin, or clothing. When mixing this material, it is important that goggles, rubber gloves and cotton clothing be employed. **REFER TO THE CHEMICAL MANUFACTURER'S SAFETY INSTRUCTIONS.**

The chemical solutions should not be added to the boiler in high concentrations through the regular chemical feed system since these high concentrations may plug the chemical feed piping and valves.

If the boil-out chemicals must be injected to the boiler drum through the chemical feed system, the concentration should be reduced to five (5) percent solution in a mixing tank ahead of the chemical feed pump suction and the pump and chemical lines flushed thoroughly after pumping is completed.

3.4.2 Recommended Chemicals for Boiling-Out:

Alkaline chemicals such as soda ash and caustic soda are commonly used for boiling out a unit since these agents possess the ability to saponify the oil and greases and form a soap compound that is easily removed by high pressure blowdown during the boiling-out process and after completion of boil-out, by flushing with a high pressure hose using cold water.

In recent years, phosphate has been used as an agent to provide thorough cleansing of internal boiler surfaces. Both trisodium phosphate and disodium phosphate, accompanied by either caustic soda or soda ash, have been used. In this connection, an embrittlement inhibitor has been used in the boiling-out solution with a commercial "wetting agent".

It is known that inter-crystalline cracking (caustic embrittlement) has been caused by the caustic soda used during the relatively short boiling-out period. The alkaline concentrations developed in the boiler water during boiling-out are quite high in comparison to standard boiler water concentrations. It is safer practice therefore, to add to the boiler water an adequate concentration of an embrittlement inhibitor. Sodium nitrate is the preferred agent for this purpose.

For the most effective removal of oil from boiler metal surfaces, it is recommended that a "wetting agent" be incorporated in the boil-out mixture. These agents increase the "wetting power" of the water by reducing the surface tension and therefore reduce the adherent characteristics of oils and greases to a minimum. The combination of a "wetting agent" along with the regular boil-out chemicals will therefore break down the oil-sludge bond and remove the oil and grease from the metal surfaces.

The following chemical dosages are all solutions that have proven successful on many installations and will clean a boiler satisfactorily. The proportions of each chemical should be accurately weighed before being placed in the mixing tank.

A. When a basic phosphate boil-out of a steam generator is desired, trisodium phosphate should be obtained in its crystalline form. In addition soda ash should be used along with sodium nitrate and a wetting agent. Sodium nitrate is employed to inhibit caustic embrittlement. The wetting agent is used to assist in complete removal of oils and greases from the surfaces of the metals to be cleaned.

The chemical charge should consist of the following proportions:

Trisodium Phosphate (crystalline)	5.24 lb per 1000 lb water
Soda Ash	1.00 lb per 1000 lb water
Sodium Nitrate	0.15 lb per 1000 lb water
Wetting agent	0.10 lb per 1000 lb water

Refer to the contract section, Section 2 to determine the amount of water required to fill the boiler.

If trisodium phosphate is not obtainable, it is permissible to substitute disodium phosphate (anhydrous); however, the weight of this chemical should be based on: 2.5 lb per 1000 lb water.

B. There are many commercial wetting agents that may be used in connection with boiling-out. A partial list of those recommended are given below with the names of their manufacturer.

Aerosol (OS)	American Cyanamid Co.
Merpol C	EI duPont de Nemours
Tergitol #4	Carbon & Carbon Chem.

Tergitol #7	Carbon & CarbonChem.
Igepon T	General Analine & Film
Artic Syntex T	Colgate Palmolive-Peet
Cominol	Commonwealth Color & Chemical
Santomerse D	Monsanto Chemical Co.
Nacconal NR	National Chemical Co.
Orvus AB	Procter & Gamble
Kreelon	Wyandotte Chemical Co.

Note: The following procedure is based on the assumption that TSP solution (Na_3PO_4-$12H_2O$) will be used. If alternate boil-out chemicals are used, it is expected that no significant change to this procedure is required. Nevertheless, the owner is requested to submit a list of actual chemicals used for Kvaerner review and approval.

3.4.3 Preparations for Boiling-Out:

Prior to boil-out, the items previously outlined under "Safety Precautions" and "Curing of Refractory" must be consulted and followed.

A careful cleaning and inspection of the interior and exterior surfaces of the boiler and auxiliaries should be made for the purpose of removing all scrap metal, borings, wood, tools rags and other miscellaneous materials. It is very important that these materials be removed before boil-out, otherwise, foreign matter in the interior of the boiler sections is likely to interfere with the operation of blowdown valves and future operation of the boiler.

No attempt should be made to set safety valves when the boiler contain water of high chemical concentration such as that used for boiling-out purposes. The safety valves should be set when the boiler contains water of approximately normal concentration during the initial start-up phase.

Normally, the cyclone and loopseal refractory cure will have been accomplished prior to boil-out. For the initial start-up or for start-up after repairs to the refractory, the boil-out may coincide with curing the refractory in the windbox and combustion chamber.

For the initial boil-out, it is simplest to utilize the duct burner as the sole source of heat for boil-out. In this case, it is not necessary to have bed material in place. For subsequent boil-outs it is permissible to fire the boiler with the bed material in place if desired.

Chemical injection should be carried out only when main feedwater is flowing. Injection must be completed well in advance of reaching the desired drum level so that chemicals in the boiler feed pipe will be flushed out during the final stage of the boiler fill cycle.

A. Open drum vent valve so that air can be expelled as the boiler is being filled. Filling the unit should be accomplished using feedwater pumping and piping system normally used for boiler operation. This will have the advantage of flushing out the piping and auxiliaries ahead of the boiler.

B. Open the boiler feedwater check valve and the start-up vent valve. Close the main steam stop valves. The boiler feedwater stop valves should be closed to protect the feedwater control valves. Boiler feedwater flow control by-pass valve should be throttled as required to control flow to the boiler.

C. Mix the boiler chemicals into a "pumpable" solution and inject them into the boiler feedline at the economizer drain connection.

D. Raise the water level so that it is just visible in the bottom of the lower gage glass.

E. When the desired steam drum level is reached, close the boiler feedwater flow control by-pass valve, but remember that this valve must be throttled open whenever water is added to the boiler.

NOTE:

AT THIS POINT, ALL STEAM DRUM VALVES WITH EXCEPTION OF INSTRUMENT CONNECTIONS AND VENTS SHOULD BE CLOSED.

3.4.4 Boiling-Out Procedure:

A. Start the boiler in accordance with section 4.1 or 4.2 up through starting the duct burner. All heat for boil-out will be supplied by the duct burner only.

B. Establish stable firing at the low duct burner firing rate. After establishing a stable duct burner firing at low fire, increase firing rate within these limits:

1. Increase air temperature no faster than 200°F per hour.

2. Increase the temperature of the water in the drum no faster than 100°F per hour as described in section 4.2.1

C. Close the steam drum vent valve when boiler pressure reaches 15 psig.

D. Continue to fire the duct burner until the steam drum pressure reaches 250 psig. Then fire as necessary to maintain a steam drum pressure of approximately 170 psig for at least 8 hours.

E. The boiler feed pump must be kept available for operation should makeup water be required.

F. Raise the water level to approximately 2 inches from the top of the upper gage glass and fire as required to maintain 170 psig drum pressure.

G. When the high water level and drum pressure of 170 psig +/- 50 psig has been reached, shut off the duct burner.

H. First blow down the economizer through the economizer drain valve. This should be a long easy blow for the purpose of pulling the solution from the drum back through the economizer to clean it. Blow for approximately 30 minutes. If the blow goes dry due to lowered drum level then stop blowing, refill the drum, reheat the water, stop firing and continue.

CAUTION

DO NOT FIRE THE BURNER AT ANY TIME DURING A BLOW.

I. In sequence blow down the evaporator , each of the four water wall headers and the enclosure wall headers. It is recommended that when blowing down these lines, the root valve be opened first and closed last. The second valve in line should be used to control flow.

J. A cooled sample from the drum should be checked for phosphate, pH, Silica and Total alkalinity and a record kept of the chemical concentrations.

K. If the water in the steam drum falls below 2 inches from the bottom of the gage glass refill the steam drum and fire the duct burner to maintain 17o psig +/- 50 psig.

L. Repeat steps H and J once every 4 hours for at least 24 hours until all signs of oil have disappeared from the cooled boiler water sample except that the economizer and the evaporator blows can now be done similar to the boiler headers. Repeat step K as required.

M. Cool, drain the boiler and thoroughly rinse the boiler to remove the alkaline material. When the boiler is finally drained, the steam drum should be inspected and any sediment removed. If any foreign matter is found in a header, it can be removed by hand or flushed by a high pressure water hose. In addition to checking for sediment, inspection should assure that the metal internal surfaces are free from oil adherence.

After the drum and headers have all been cleaned and inspected, the unit can be closed. New manway gaskets should be installed on the drum and inspection nipple caps or tube cut for cleaning and inspection should be replaced. The unit should be filled with either demineralized water or condensate and subjected to a hydrostatic test at the normal operating pressure. The unit should be drained to normal operating drum level.

NOTE:

TO PROTECT THE SUPERHEATER, THE SUPERHEATER WILL BE BACKFILLED WITH DEMINERALIZED WATER THROUGH A TEMPORARY HOSE. THIS WILL BE DONE WHEN THE WATER LEVEL IN THE DRUM REACHES THE BOTTOM OF THE DRUM LEVEL GLASS. BACKFILLING OF THE SUPERHEATER WILL CONTINUE UNTIL A RISE IN THE LEVEL OF THE STEAM DRUM IS OBSERVED.

The backfilling of the superheater will insure that none of the water, chemistry or deposits from the boiler will carry over into the superheater. As the water in the superheater warms during boil-out, it will boil and expand generating a flow from the superheater into the steam drum.

4.0 OPERATION:

4.1 Initial System Start-Up - New Boiler:

4.1.1 General:

A. General Information:

The operator should be thoroughly familiar with the function and controls of the boiler,components, and auxiliary equipment before operating the unit. The information given in this section is not intended to be a detailed procedure for operation of the steam boiler but is meant to serve as a guide together with the instructions of the auxiliary equipment manufacturers and with knowledge derived from initial unit operation in developing a detailed operation procedure.

The operator should be aware of the limitations imposed on the various parts of the boiler and its auxiliaries and be alert to the actual operating conditions during start-up.

B. Boiler Operating Limits:

The boiler can be operated at a maximum continuous rating (MCR) of 176,000 lb/hr, 700 psig and 750°F at the boiler outlet with feedwater entering the economized at 250°F.

4.1.2 Procedure for the Initial Charging of Bed Material into the Combustor:

The initial bed material will be sand. The sand storage silo is filled with sand from a pneumatic delivery truck. The slide gate valve is opened and the sand will be fed by gravity into the combustor. The amount of sand delivered to the combustor can be monitored by the bed pressure transmitters. Sufficient bed inventory has been established when the bed pressure has reached 36 inches wc.

NOTE:

BED MATERIAL MUST BE ADDED ONLY WHEN THE PRIMARY AND SECONDARY AIR FANS ARE OPERATING.

4.1.3 Filling the Boiler:

In filling the boiler for start-up certain precautions should be taken to protect the boiler pressure parts. First, a high quality water must be used to minimize waterside corrosion and deposits. Second, the temperature of the water should be regulated to match the temperature of the boiler metal to prevent thermal stresses. High temperature differentials always cause thermal stresses in the pressure parts and , if severe, will limit the life of the pressure parts. High temperature differentials also distort the pressure parts enough to break studs, lugs and other attachments.

A third precaution taken during filling operation is the use of the start-up vent to displace all air with water. This reduces oxygen corrosion and assures that all boiler tubes are filled with water.

A fourth precaution is to establish the correct water level before firing begins. The water level rises with temperature: therefore, only one inch of water is required in the gage glass except with certain special designs that may require a starting level higher in the gage glass to fill all circulating tubes exposed to the hot flue gases.

See also Section 4.2.2

4.1.4 General Precautions:

There are **FIVE** critical precautions that the operator must observe and exercise during all phases of operation of this unit.

A. FURNACE PRESSURE LIMITS:

Exposure to excessive negative or positive furnace pressure can result in serious damage to the unit and auxiliary equipment. The following controls should be in service and operable prior to start-up for control of and for protection against excessive furnace pressure or draft.

1. The upper combustion chamber draft should be monitored constantly and automatically controlled to between 0.0 to - 0.5 inches wc.

2. The Master Fuel Trip (MFT) should be set at +/- 2 inches wc pressure in the upper combustion chamber.

NOTE:

The above pressure limits are based on Kvarener supplied equipment only and do not take into account effects of equipment supplied by others on either the inlet or outlet end of the boiler.

On any MFT (except low low drum level) when fans trip:

a. Boiler master control transfer to manual.

b. Fuel feeder trips.

c. Start-up burner trips.

d. Limestone feeder trips.

e. Primary and secondary air fan inlet dampers move to minimum flow.

f. Duct burner trips (if operating).

3. The operator should not allow the furnace draft to exceed - 2.0 "wc.

4. On loss of primary and secondary air fans and the ID fan, the collapsed bed can generate combustibles. Access doors should be left closed. Air flow should be slowly reestablished to purge out combustibles from the unit.

B. DRUM WATER LEVEL:

Water level is indicated in the gage glass. The normal drum water level is 4 inches below the center line of the drum. The alarms are set at 5.5 inches below and 4 inches above normal water level and trips are set at 7 inches below and 4 inches above normal water level.

NOTE

A low low drum water level condition initiates a master fuel trip (MFT).

To protect the drum from undue thermal stress, the metal temperature differential between the top and bottom of the drum should not exceed 200°F. **Never add cold water to a hot drum.**

C. SAFETY VALVE ADJUSTMENT:

All safety valves are set at the valve manufacturer but should be rechecked under actual operating conditions as the boiler is brought up to pressure during initial operation.

If a safety valve does not pop at the pressure stamped on its nameplate or reseat properly, the valve should be readjusted. In some localities, it is required that only certain authorized persons may change or adjust the safety valve settings or that changes in safety valve settings be witnessed by authorized persons. It is advisable to consult boiler insurance codes before changing the setting of safety valves.

It is recommended that checking and adjusting safety valve settings during initial operation be performed by the valve manufacturer service engineer.

D. EXCESS AIR REQUIREMENT:

Care should be exercised to insure that the proper fuel-air ratio for good combustion is maintained. The design performance calculations were made for an excess air requirement of 25% at MCR load. This corresponds to an O_2 measurement of approximately 4%. Higher than normal excess air should be maintained for the first 150 hours of boiler operation to ensure an oxidizing atmosphere for the tube surfaces. The O_2 value should be at least 6%.

With experience, it will be possible to reduce excess air, to approximately 3.5%.

CAUTION

OPERATION WITH INSUFFICIENT EXCESS AIR CAN BE DETRIMENTAL FROM THE STANDPOINT OF GOOD COMBUSTION AND SAFE OPERATION OF THE UNIT.

E. BED TEMPERATURE LIMITS:

Normal operating bed temperature is 1560°F +/- **(TBD)**. This temperature should be monitored during operation and attempts should be made to operate at this level.

Maximum temperature of the bed is 1800°F. Do **NOT** allow the temperature to exceed this value.

NOTE:

The high bed temperature alarm point is (_____). A main fuel trip is automatically initiated at 1800°F.

Minimum temperature of the bed is 1200°F. Do **NOT** allow the temperature to drop below this value.

NOTE:

The low bed temperature alarm point is (_____). A master fuel trip is automatically initiated at 1200°F.

4.1.5 Operational Procedures:

The following precautionary steps must be taken to insure reliable operation of the boiler:

A. Sootblowers should be run at intervals dictated by particulate deposit accumulation on the gas side of the tubes. As accumulations occur, the differential pressure reaches (_____) across the superheater, or (_____) across the evaporator, or (_____) across the economizer, sootblower operation must be initiated.

B. It is recommended that the convection surfaces be inspected for particulate deposit accumulation each time the boiler is taken out of service. The surfaces should be cleaned accordingly before boiler restart if any particulate accumulation is detected.

C. To prevent plugging, rusting and oxidation and faulty operation of equipment, air used on the boiler for operating purposes, whether for sealing, aspirating or atomization, should be free from dirt, oil and water.

D. All high and low furnace pressure safety interlocks should be checked for proper values and correct switching action and be in service before starting the induced draft fan.

E. The automatic furnace draft control equipment should be checked and ready for service before starting the induced draft fan.

F. Oxygen (O_2) is monitored continuously during operation of the boiler by a permanently installed unit in the flue gas duct. O_2 levels should not fall below 3.5%. The oxygen analyzer must be checked and calibrated monthly, or sooner if the stack mounted O_2 analyzer is not in agreement.

G. It is strongly recommended that the reliability of all drum level indicators be checked at least once per shift. This would include all gage glasses, remote level indicators and level recorders. This can be done by changing drum level and observing the response of all indicators and gage glasses.

H. Thermowells are provided throughout the boiler and temperatures are indicated on the recorders. Be sure that thermocouples are installed in the thermowells provided for operating and testing purposes.

4.1.6 Start-up Procedures:

The operating sequence recommended in insure safe and proper start-up is given below. Modifications may be necessary as subsequent operating experiences dictates. Follow the manufacturers' instructions contained in other volumes of this manual for operating the auxiliary equipment.

NOTE:

A general equipment walkdown of the equipment and associated auxiliaries should be checked by at least two people to verify that the equipment and the auxiliaries are ready for start-up, including the following:

A. Fuel Feed System

1. Fuel rotary valve
2. Fuel feeder
3. Fuel silo inventory

B. Limestone Feed System

1. Limestone rotary valve
2. Limestone feeder
3. Limestone silo inventory
4. Limestone piping system

C. Sand Feed System

1. Sand outlet valve
2. Sand silo inventory

D. Ash Removal System

1. Ash dome valve
2. Ash cooler water cooled screw
3. Ash transport system

E. Burner system

1. All valves and switches
2. Start-up burner
3. Duct burner

F. Feedwater Supply System

1. Feedwater control valve

G. Sootblower system

1. All piping
2. Superheater blowers
3. Evaporator blowers
4. Economizer blowers

H. Turbine
Later

I. Baghouse
Later

J. Fans

1. Primary air fan
2. Secondary air fan
3. Induced draft fan

K. Air Compressor
Later

L. Operation of the Pressure Tap Purge System:

The pressure tap purge system should be put into operation. Close the two valves on the differential pressure transmitter and adjust the two differential pressure regulators until there is a low flow of air through the pressure probes into the bed.

When a steady flow has been established, the manifold valves can be opened again to activate the transmitter. Periodically the pressure taps should be manually purged with a blast of high pressure instrument air. The frequency of this purging must be established by experience. Always close the valves to protect the transmitter and the differential pressure regulators when the high pressure purge is being performed.

M. Make sure that the test gags and/or plugs are removed form all safety valves.

N. Check availability of utility services, power, ignition and main fuel and suitability of treated feedwater.

O. Check operation of all valves and dampers.

P. Close all access doors and observation ports after it is proven that no one is inside the boiler. Release all safety tags on equipment to be placed in service.

4.2 System Start-up:

4.2.1 Valve Positions:

Place the boiler's vent, drain and instrument valves in the following positions. This list assumes that the boiler is empty.

Valve No.	Valve Description	Position
	Feedwater S/O	open
	FW Control Valve	N/A
	Feedwater S/O	open
	FW Bypass S/O	closed
	Feedwater Check	N/A
	Feedwater S/O	open
	FW Group Drain	closed
	FW Drain Blowdown	closed
	Main Stm. N/R	closed
	Sootblower Press. gage S/O	open
	Start-up vent S/O	open
	S/U Vent Motoriz.	open during filling
	Air vent S/O	open during filling
	Safety relief	
	Safety relief	
	Sootblower S/O	closed
	Stm. Pres. Ind.S/O	open
	Stm. Drm. Level Transmitter S/O	open
	Stm. Drm Level Transmitter S/O	open
	Stm Drum water column S/O	open
	Stm Drum water column S/O	open
	Water Col. Drn.	closed
	FW Press Gage S/O	open
	Stm Drum Pressure gage S/O	open
	FW Press. Gage Drain	closed
	Stm Drum Pressure Gage Drain	closed
	Level Trans S/O	open
	Level Trans S/O	open
	Water Column S/O	open
	Water Column S/O	open
	Water Col. Drain	closed
	Sample Cooler S/O	closed
	Sootblr. Trap B/P	closed
	Steam Trap	N/A
	Sootblr. Trap B/P	closed
	Sootblr. Drain	closed

Valve No.	Valve Description	Position
	Sootblr. Trap Bypass	closed
	Ecomomizer Blow down Stop	closed
	Ecomomizer Blow down Stop	closed
	Steam Drum Blow down Stop	closed
	Steam Drum Blow down Stop	closed
	Steam Drum Blow down Stop	closed
	Comb. Chamber water wall	closed
	Water Wall B/D	closed
	Fr. Wall Hdr.	closed
	Fr. Wall Hdr.	closed
	Side Wall Hdr.	closed
	Side Wall Hdr.	closed
	Cage Wall Hdr.	closed
	Cage Wall Hdr.	closed
	Cage Wall Hdr.	closed
	Cage Wall Hdr.	closed
	Sootblowing Stm. Admission	closed
	Gage glass S/O	open
	Gage glass S/O	open
	Gage glass S/O	open
	Gage glass S/O	open
	Wtr. Col. Drain	open
	Wtr. Col. Drain	closed
	St. Trap Is. V/V	open
	St. Trap Is. V/V	open
	Sootblr. Trap	open
	Pres. Trans. S/O	open
	Sootblr. Warmup	closed
	Superheater vent	open
	Superheater vent	open
	SH Safety V/V	open during filling
	SH Safety V/V	open during filling

4.2.2 System Start-up:

1. Fill the boiler by admitting water via main feed control valve to the economizer using water form the regular feedwater source. The temperature of the water should not be more than 100°F above or 30°F below the temperature of the pressure parts.

Continue filling the boiler until water in the steam drum is just visible in the bottom part of the gage glass. Operate the water column and gage glass blowdown valves to assure the water returns promptly in the gage glass when the valves are closed.

2. Check that the drum level indicators are operating in the control room and that they compare accurately with the local gage glass readings.

3. Check that all pressure and draft gages are calibrated and functioning properly.

4. Check all safety interlocks for proper operation.

5. Verify that the drum level is visible in the gage glass. Close the start-up vent valve.

The following operating sequence is recommended to insure a safe and proper start-up. Modifications may be necessary as subsequent operating experience dictates. Follow the manufacturers' instructions for operating all auxiliary equipment, e.g. baghouse, start-up burner, etc.

4.2.3 Preparation for Boiler Purge:

Immediately prior to each start-up and prior to starting after a master fuel trip (MFT) the boiler must be purged (except the special procedure for hot restart). The dampers should be placed in the following positions in preparation for a purge:

1. Primary and secondary inlet fan dampers and ID fan inlet dampers are closed.

2. Put all manual-auto stations in the manual mode.

4.2.4 Purging the Boiler:

Purge the boiler in accordance with the following procedure:

1. Check that the fuel supply valves to the start-up burner are closed.

2. Start the ID fan.

3. Start the primary air fan.

4. Start the secondary air fan.

5. Open the ID, primary and secondary inlet dampers to establish at least 40% of boiler full load air flow. Furnace must be kept within **(TBD)** to avoid tripping the fans.

6. Place the ID fan on automatic control to maintain furnace draft at a slight negative pressure (-0.5" to -1.0" wc).

7. Adjust primary and secondary air fan dampers to maintain flow of at least **(TBD)** ACFM through the boiler.

8. Place the primary air fan on automatic control to maintain an air flow of **(TBD)** ACFM.

9. Place the secondary air fan on automatic control to maintain an air flow of **(TBD)** ACFM.

10. Push the "Purge On" button and purge the unit for **(TBD)**

4.2.5 Warming the Unit:

CAUTION

PRIOR TO THE LIGHT OFF THERE MUST BE AN INVENTORY IN THE BED EQUAL TO _____ AND THE UNIT MUST HAVE BEEN PURGED.

NOTE:

To protect the drum from undue thermal stress, the metal temperature between the top and bottom of the drum should not exceed 200°F.

1. Start the duct burner on low fire condition. Maintain low fire condition until the lower combustion chamber temperature stabilizes, then increase the duct burner firing rate so as to increase the air temperature no faster than 200°F per hour.

2. Start the start-up burner on low fire. Maintain low fire condition until the lower combustion chamber temperature stabilizes.

3. Heat Up Rate: it is necessary to regulate the rate at which the boiler is heated to prevent excessive thermal stress. The maximum allowable drum heat up rate is 100°F per hour.

This boiler is not equipped with drum metal thermocouples. It is therefore necessary to estimate the drum metal temperatures by a combination of the following methods.

a. Thermocouple temperature measurements:

Thermocouples are located in two wall tubes of the combustion chamber. These thermocouples will provide an indication of the water temperature entering the drum. The temperatures will lead the drum water temperature during heat up and lag it during cool down.

b. Drum pressure measurement:

Range psig	Maximum Allowable Rate of Change psig/min
0-100	1.2
100-200	0.8
200-300	0.5
300-400	0.4
400-500	0.3
500- operating	0.25

It is also necessary to regulate the rate at which the primary air is heated by the duct burner because an excessively fast heat up rate may distort the grid or damage the plenum refractory lining.

Heat the bed material and raise the drum pressure to 25 psig. Firing should be regulated to increase boiler pressure part temperature at 100°F/hr.

4. During heating of the unit, the drum level will rise. Maintain the drum level within the range using the continuous blowdown valve and feedwater control valve.

5. During heating of the unit, care must be taken to ensure that damage is not done to the refractory lining in the cyclones and combustion chamber. Modulate burners so that the temperature rise in the cyclone inlet does not exceed 200°F/hr.

NOTE:

Reduce burner firing rate if water hammer results at the high firing rate.

4.2.6 Start-Up:

1. Close the air vents and start-up vent. The cold start-up should take about 2 hours to reach 25 psig.

2. After achieving approximately 25 psig in the drum recheck the drum water gage glass operation by a short blowdown. Maintain visible water level in the gage glass.

Water level in the drum will rise due to swelling of water in the system. Blow down the drum as required by opening the steam continuous blowdown valve.

If the boiler water silica or solids content is above the recommended limit, the drum water should be blown down using the steam drum continuous blowdown valve until the recommended limit is reached.

NOTE:

When starting the unit with a fresh bed of limestone, there will be a considerable rise in bed temperature after approximately one hour. This rise is due to completion of the calcination of the limestone and the operator must be prepared to adjust (reduce) the fuel feed rate accordingly. It is recommended that for first fire sand be used as the bed material to avoid this complication.

3. The following procedures are the steps to be taken to start-up the unit.

a. Continue heating the boiler using the duct burner until the windbox temperature reached 600°F, then modulate the burner to maintain this temperature.

b. Continue heating the boiler using the start-up burner until the bed temperature reaches 1000°F, at which time fuel feed may begin. Maintain heat in the combustor with the start-up burner until fuel ignition is established, extinguish the start-up burner when the combustor temperature reaches 1200°F.

c. Start the fuel feed when the combustor temperature reaches 1000°F at a rate of approximately 2500 lb/hr.

d. When the combustor temperature stabilizes at 1450°F, take the duct burner out of service.

e. View the bed through the observation ports to confirm that the fuel is burning in the bad and that the bed is properly circulating.

f. Place the air flow on automatic control and adjust the fuel feed as required to maintain 1450°F bed temperature.

g. Vent steam through the start-up vent as required so that the rate of temperature rise in the drum does not exceed 100°F/hr.

h. Place drum level on automatic.

i. Place fuel feed, limestone feed and ash systems on automatic.

4.3 Hot Restart of the Boiler:

The boiler can be shut down for short periods of time and held in the hot condition. When the boiler is to be hot "slumped". the fuel feed should be stopped. When the O_2 starts to increase , the air flow to the combustor should be stopped to minimize heat loss. This O_2 increase indicates that most of the fuel has been burned and the bed can be slumped without the formation of clinkers material in the bed. The fans are then stopped. All valves and air control dampers are closed so that a minimum amount of heat is lost. No fire is maintained or introduced into the furnace: therefore, the pressure in the steam drum will decrease. The bed material forms a good insulator and helps to minimize the heat losses within the boiler so that the boiler can be restarted without the use of the start-up burners, provided the bed temperature remains above 1200°F.

CAUTION:

THERE MUST BE BED INVENTORY PRESENT IN THE UNIT BEFORE INITIATING ANY START-UP SEQUENCE.

NOTE:

A hot condition is one in which the average bed temperature is above 1200°F. If the average bed temperature is below 1200°F, follow the procedure described for a cold start-up, Section 4.2.5. The average bed temperature of the slumped bed must be read from the lower set of bed thermocouples. If the bed temperature does not rise within 5 minutes of starting the fuel feed, fuel ignition has not occurred. The fuel feed must be stopped, the unit purged and started following the normal start-up procedure in Section 4.1.6.

4.4 Normal Operation:

4.4.1 Firing:

1. The primary technique for changing boiler load involves varying the fuel feed rate and the corresponding air flow rate. Bed temperature may be varied between 1400°F and 1650°F to permit small increments of change within a short period of time. However, after obtaining the desired steam rate, bed temperature should be reestablished at 1560°F and boiler load held steady by adjusting the feed rate. In all cases, make sure that air flow tracks fuel flow, either manually or automatically, to maintain a set excess O_2 value $< 3.5\%$.

2. The SO_2 emissions from the boiler should be monitored at all times. The limestone feed rate must be adjusted, either manually or automatically, to maintain an SO_2 emission level at the stack that is in compliance with the local regulations. Also, the SO_2 value should not be allowed to be less than 75% of the standard value for a long period of time since this contributed to inefficient operation of the unit and results in excessive limestone usage.

NO_x emissions are inherently low within the bed in the operating temperature range of 1450°F to 1650°F. NO_x emissions are increased as bed temperature is increased.

3. Periodically inspect the bed for proper fluidization and circulation. This is accomplished by observing the bed through ports, checking temperatures throughout the system to ascertain that they are consistent with one another and finally by monitoring pressure within the lower combustion chamber.

If it is concluded that a portion of the bed is not properly fluidized, increase the primary air flow and ash removal rate temporarily. If this increase does not provide improved fluidization, it may be necessary to shut down the boiler and inspect for pluggage of the air grid nozzles, clinkers in the bed, or rock accumulation. This operational problem within the system does not mean that the unit must be shut down as soon as it is detected. The condition should be monitored and the operator can decide whether a shut down is necessary having assessed this problem over a period of time.

4. Continuously monitor the gas side pressure differential through the superheaters, evaporator and economizer. Use the sootblowers in good time to remove any buildup that might have accumulated.

5. Periodically inspect the fuel and limestone feed system for pluggage.

6. Continuously monitor the fluidized bed material inventory and maintain it at its normal value by adding sand or extracting bed material.

7. Continuously monitor the air distribution grid pressure differential. If this differential decreases significantly, check instrumentation for proper operation and the sensing lines for pluggage. If instrumentation is operating properly, shut down the boiler and inspect the air distribution grid.

8. Periodically check the ash cooler and ash removal system for blockage or plugging.

4.4.2 Water Chemistry and Steam Purity:

1. Assure that the desired boiler water solids concentration and chemistry are maintained. Improper boiler water can lead to fouling or corrosion of the internal surfaces, reducing the efficiency of the unit and possibly resulting in tubes becoming overheated which can lead to tube failure.

2. Large quantities of solids from the injection of water treatment chemicals to the feedwater before the economizer should be avoided.

3. Oxygen content and pH of the feedwater must be strictly controlled.

4. Assure that moisture carryover from the drum is within permitted limits. For operation within the design conditions, the steam separation equipment will keep solids carryover within acceptable limits. Moisture carried over can include solids and other impurities which may deposit in the superheater.

5. If solids carryover is being caused by excessive boiler water solids concentration, this may be controlled by adjustment of the steam drum continuous blowdown valves in the continuous blowdown system.

6. The required frequency of blowoff should be determined by monitoring the boiler water chemistry.

CAUTION:

Drain valves on the lower waterwall headers should not be used for blowdown purposes when the unit is in operation. Improper use of these valves may interrupt WATER CIRCULATION AND BURN OUT TUBES.

4.5 Normal Shutdown:

1. Reduce the fuel and air input to reduce boiler load to 50%. Normal bed temperature should be maintained. During shutdown, do not exceed a maximum temperature differential of 200°F between the top and bottom of the drum.

2. Shut off the fuel feeder, shut off the limestone feeder and shut off the bed material extraction (if in use).

3. Check and maintain drum level near the upper limit of the gage glass during shutdown.

4. Continue fluidizing the bed to purge and cool the entire system at a maximum rate of 100°F/hr on the pressure parts. Use the start-up burner or duct burner to obtain the required rate of temperature decline.

5. Continue air flow through the unit until the desired system temperatures are reached.

6. Close the primary and secondary air fan inlet dampers. The dampers should be closed slowly permitting the ID fan automatic damper control to maintain the furnace draft between -0.5 and 1.0 inched wc. After both fan inlet control dampers are completely closed, shut down all fans

7. Continue to operate all ash removal systems until their respective hoppers are empty. Close the bed drain dome valve and continue to operate the ash cooler until the bed drain pipe and cooler are empty.

8. Open all vents when the drum pressure has decreased to approximately 25 psig. Temperature of the boiler water should not exceed 250°F if the unit is to be drained. Draining the unit when there is still a small amount of pressure on the unit is preferred as the residual heat will assist in drying the internal surfaces.

9. Idle boilers should not be allowed to remain partially filled with water for any appreciable length of time. Fill them completely with deaerated alkaline water into which hydrazine has been added for protection against corrosion. If the outage will amount to several weeks or months, or should weather prohibit filling the unit, drain and dry the unit placing shallow pans of unslaked lime or several pans of silica gel in the drum to absorb moisture and maintain the internal surfaces in a dry condition. When the unit is to be out of service for several days or longer, all ash, soot deposits and bed material should be removed since moisture will be absorbed by these materials causing corrosion.

4.6 Off Normal Operation:

The following list contains situations that are considered off normal and that if allowed to continue, will trip the unit. The trip will occur on either two ways, by the MFT, or by the interlock system.

4.6.1 High or Low Primary Air Fan Discharge Pressure:

1. Check electric motor

2. Check fan rpm

3. Check inlet damper for actual position versus position indicated by the control system

4. Check for, primary air flow to fuel feeder relative to set point

5. Check primary air screened inlet for blockage

5. Check all bearings for overheating

4.6.2 High or Low Secondary Air Fan Discharge Pressure:

1. Check electric motor

2. Check fan rpm

3. Check inlet damper for actual position versus position indicated by the control system

4. Check for, primary air flow to fuel feeder relative to set point

5. Check primary air screened inlet for blockage

6. Check all bearings for overheating

4.6.3 Duct or Start-up Burner Flame Failure:

Follow manufacturer's operation instructions contained in another volume of this manual to remedy the malfunction

4.6.4 High or Low Bed Temperature:

1. Check thermocouples and associated instrumentation for proper operation

2. Check fuel feed rate

3. Check for proper operation of all fans and blowers

4. Check for proper boiler water level

4.6.5 High or Low Natural Gas Pressure:

1. Check all regulators for proper operation

NOTE:

High or low gas pressure will cause the burners to be inoperative.

4.6.6.High or Low Furnace Pressure:

1. Check pressure taps for plugging

2. Check pressure transmitters and associated instrumentation for proper operation

3. Check for proper operation of all fans

4. Check differential pressure across air distribution grid and bed

5. Check for proper operation of the limestone feeder

6. Check for proper operation of the ash cooler

4.6.7.High or Low Drum Pressure:

1. Check for proper operation of the drum level instrumentation

2. Check feedwater pump

3. Check for proper operation of the feedwater control valve

4. Check operation of steam flow transmitter

5. Check all bearings for overheating

4.6.8. High or Low Final Superheat Temperature:

1. Check desuperheater spray water control system

2. Check cleanliness of superheater

4.6.9 Ash Cooler Failure:

1. Check for proper cooling water flow

2. Check for pluggage and rectify as necessary

3. Check motor drive

4. Check all bearings for overheating

4.7 Emergency Situations:

4.7.1 Types of Emergencies:

1. Loss of Service of Essential Equipment:

The loss of service of the following equipment will initiate an immediate automatic boiler shut-down in accordance with the emergency shut-down procedure (refer to paragraph 4.7.2)

a. Primary air fan not running

b. Secondary air fan not running

c. Induced draft fan not running

d. Low or high drum level

e. High or low furnace pressure

f. Instrument air pressure less than 55 psig

g. Control system power failure

h. High or low bed temperature (trips the fuel feeders)

2. Sudden Loss of Drum Water Level:

If the cause is known and immediately correctable, prior to the water level in the drum reaching the minimum allowable operating level, reestablish drum level to its normal operating level and continue boiler operation.

If the cause is not known and **immediately correctable** and the water level in the drum drops below the minimum allowable operating level (this situation could be the result of a tube failure), initiate an immediate shut-down in accordance with the emergency shut-sown procedure.

3. Gradual Loss of Drum Water Level:

If , at any time, it is impossible to maintain normal drum level, the load on the unit should be reduced and the cause of the difficultly corrected. If it is impossible to maintain normal drum level at the reduced load, then the unit must be taken out of service in accordance with the normal shut-down procedure, until the trouble is remedied.

4. Excessive Bed Temperature:

If the bed temperature cannot be maintained below 1700°F, an immediate decrease in the fuel feed rate must be implemented. This reduces the bed temperature rapidly to minimize bed tube exposure to high temperatures and also to prevent agglomeration and sintering of the bed material. Fuel feed may be increased when the bed temperature decreases to 1650°F. If the bed temperature cannot be controlled using this procedure, the boiler must be shut down and the cause rectified.

4.7.2 Emergency Shut-Down Procedure:

1. Waterside Failure:

CAUTION

WET BED MATERIAL CAN SOLIDIFY AND COULD CAUSE TUBE METAL CORROSION IN THE UNIT. THE BED MATERIAL SHOULD BE REMOVED AS QUICKLY AS POSSIBLE IN THESE SITUATIONS.

A. Drum level can be maintained

Remove the unit form service immediately by following the Normal Shut-Down Procedure. Remove bed material during the shut-down as quickly as possible from the bed.

B. Sudden Loss of Drum Level:

NOTE:

This procedure should also be followed in the case of loss of feedwater supply.

1. An automatic MFT will occur on low low drum level and the primary and secondary fans will go the minimum flow conditions.

2. Sufficiently cool the unit to allow the bed material removal and unit inspection.

2. Air or gas Side Failures:

This procedure should be followed in the case of primary and/or induced draft fan mechanical failure when the motor continues to run.

a. An MFT activated by low primary air flow on fan failure shuts off the fuel feed, limestone feed and bed material extraction (if operating).

b. Fans and drives will be interlocked to stop in the sequence below.

INDUCED DRAFT FAN MOTOR
SECONDARY AIR FAN MOTOR
PRIMARY AIR FAN MOTOR

A trip of the ID fan will trip the secondary air fan

c. Maintain drum level and feedwater supply.

d. Following control of the emergency situation, use the normal shut-down procedure. in Section 4.5. After correcting the reason for the emergency shut-down, normal or hot restart, as applicable can be initiated.

MAINTENANCE:

The purpose of this section is to provide general guide lines for inspection and maintenance on the equipment supplied by Kvaerner. Some of the equipment supplied be Kvaerner is manufactured by others and therefore has recommended maintenance procedures that are included in that manufacturer's equipment manual that is included in another volume of this manual. This manufacturer's maintenance procedures should be read before performing maintenance on that piece of equipment.

5.1 Maintenance Safety Precautions:

1. Always work in pairs

2. Always wear the correct protective clothing including hard hat, gloves, goggles etc. as necessary

3. Open any access door carefully to prevent hot dust, ash or other materials from falling on you.

4. Make sure that there is no combustibles or inert gas inside confined spaces.

4. Make certain there is enough air to breathe, open sufficient mandoors, handholes etc. to provide circulation of air, also provide fans force air into the unit.

5. Make sure that you can get in and out of the access door quickly and easily.

6. Ensure that there is solid, safe footing available inside the equipment.

7. Provide adequate temporary barriers at all openings where maintenance personnel could fall.

8. Use only approved safety type of lights and flashlights when inspecting and working on the boiler.

9. Follow your company's safety and lockout procedure when entering the boiler.

10. Ensure that the equipment is locked out at the motor control center.

11. Always inform the maintenance supervisor or designated person that you are entering the boiler and follow your company's standard procedure to ensure that either equipment is not started or that the door is closed while you are inside.

12. Always use new gaskets for gasketed closures.

5.2 Protection of the Boiler Pressure Parts.

The protection of the boiler pressure parts will depend upon the length of time the boiler is to be taken out of service. For simple routine annual maintenance and inspections, when the idle boiler is not drained, provision should be made for a nitrogen to be admitted to the area above the water level in the drum and possibly also the superheater. The nitrogen blanket should be maintained at 3 to 5 psig during the layup period.

During idle periods, the boiler must be protected against freezing conditions by intermittently firing the duct burner.

If the boiler is drained for the inspection period, this should be done during shut-down when the boiler is hot, to ensure that the pressure parts are dry. Place several pans of slaked lime or silica gel in the steam drum to absorb moisture and maintain the internal surfaces in a dry condition.

5.3 Boiler Internal Inspection:

a. Inspect each air distribution grid nozzle for pluggage and clean out as necessary.

b. Inspect ash drains, fuel feed, limestone feed, solids return openings, secondary air nozzles and all other openings for signs of erosion or pluggage.

c. Inspect the refractory lining for excessive wear or cracking. Patch and repair any parts that require attention.

d. Inspect the cyclone refractory for erosion or damage.

e. Inspect all water wall tube surfaces for leaks or signs of erosion.

f. Thoroughly inspect the general condition of all thermocouples and pressure taps and repair as necessary for reliable operation.

g. From this internal inspection of the combustor develop the repair list and perform the required repairs as necessary.

h. Check the steam drum for accumulation of foreign matter and broken hardware.

i. Inspect the tightness of all bolted equipment inside the drum.

5.3.3 Other Equipment

a. Check the duct burner refractory lining and repair as necessary.

b. Check windbox floor for accumulation of bed material due to back flow through the grid plate air nozzles. Remove material as necessary.

c. Check all pressure sensing lines for pluggage and clean as necessary.

d. Carefully inspect the burner systems for any damage and carry out any maintenance repairs in accordance with the manufacturers recommendations.

e. Combustion control equipment and other control equipment such as feedwater regulators and steam temperature controllers should be kept in optimum adjustment at all times. Efficiency depends upon the proper functioning of this equipment.

f. Check all fuel, limestone and sand feed piping for pluggage, erosion, overheating, etc. Repair as necessary.

g. All valve and packing leaks should be repaired to help prevent forced outages.

h. Thoroughly inspect all fans, dampers motors, bearings and drives. Lubricate the motor bearings according to the manufacturer's recommendations. Check motors for abnormal vibration frequency.

i. Check the secondary air system including the nozzles and dampers.

j. Check the sootblowers according to the manufacturer's requirements.

k. Check superheater surface for general integrity, possible erosion, corrosion, etc. If there are any excessive accumulations of fly ash clean these areas as necessary.

l. Check evaporator and economizer surfaces for general integrity, possible erosion, corrosion, etc. If there are any excessive accumulations of fly ash clean these areas as necessary.

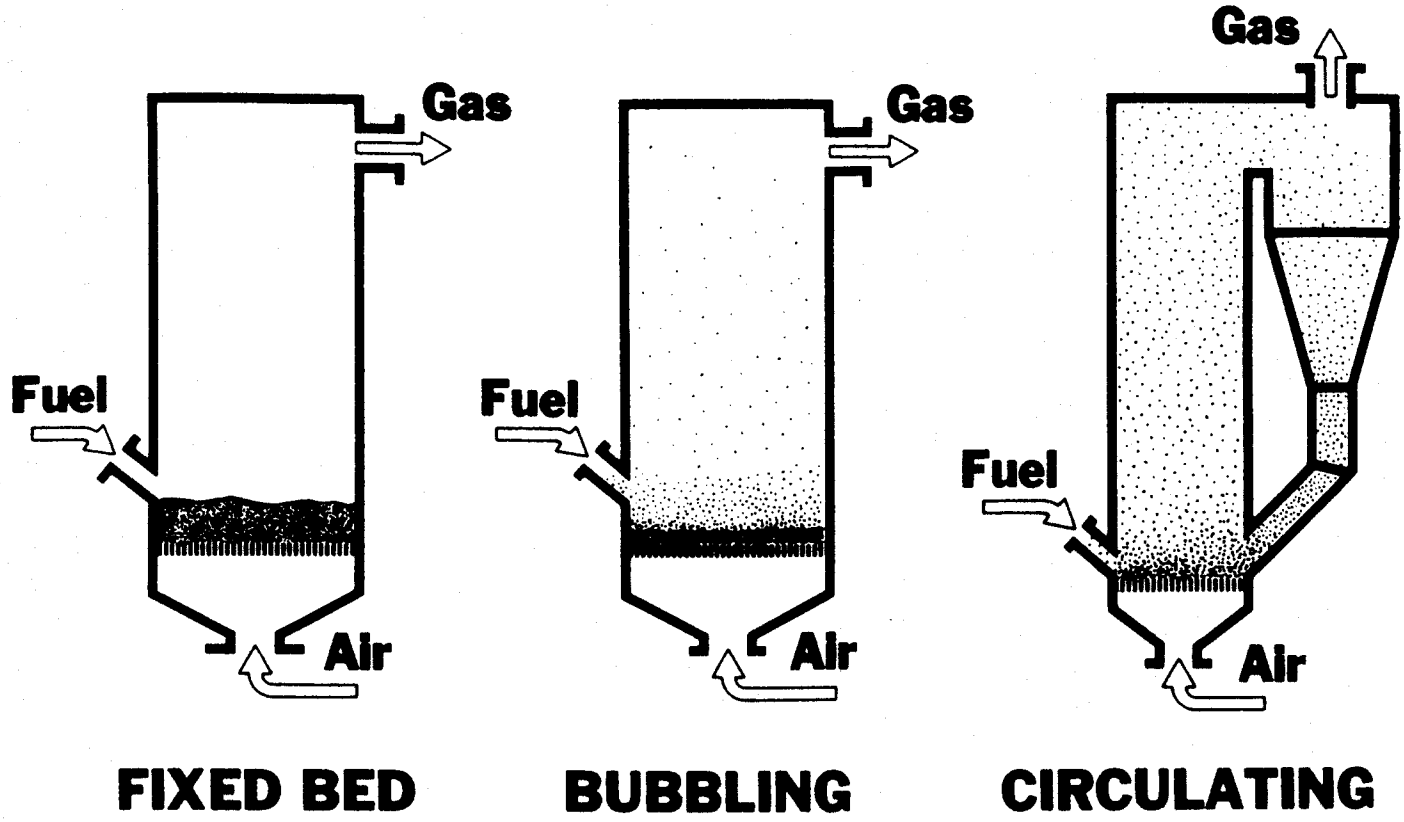

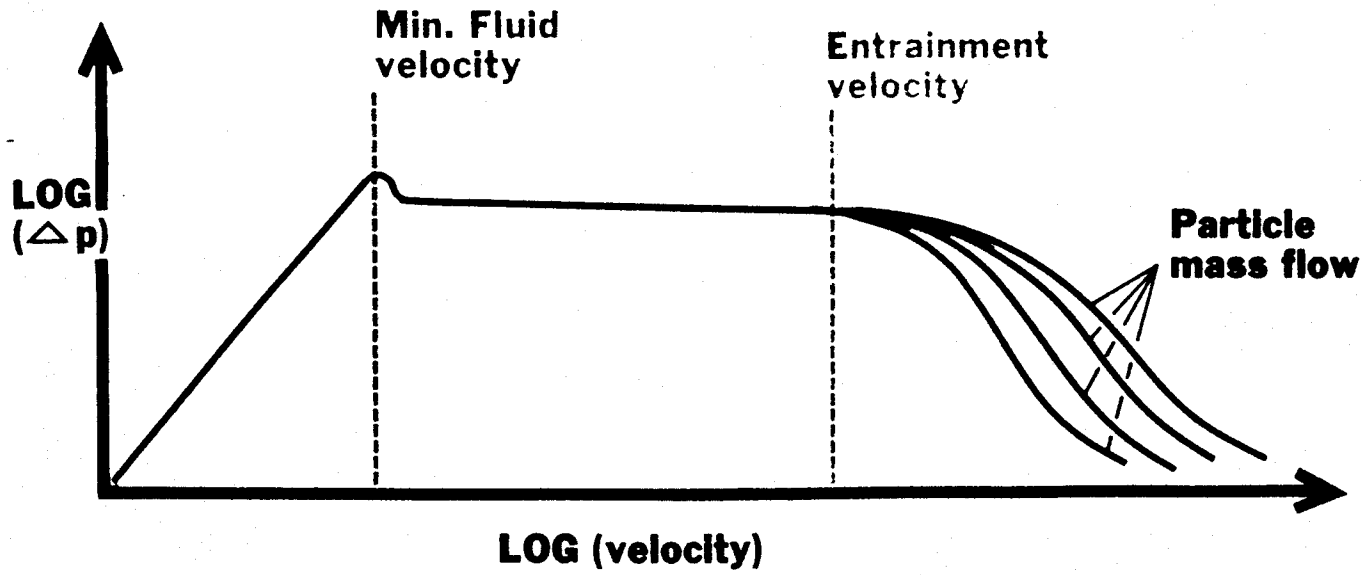

PRESSURE DROP VERSUS GAS VELOCITY

Figure 1: Pressure Drop Versus Gas Velocity

Note: These drawings will be provided when the final version of the O&M manua is produced.

Figure 2, 3, 4 and 5: Engineering Flow Diagrams

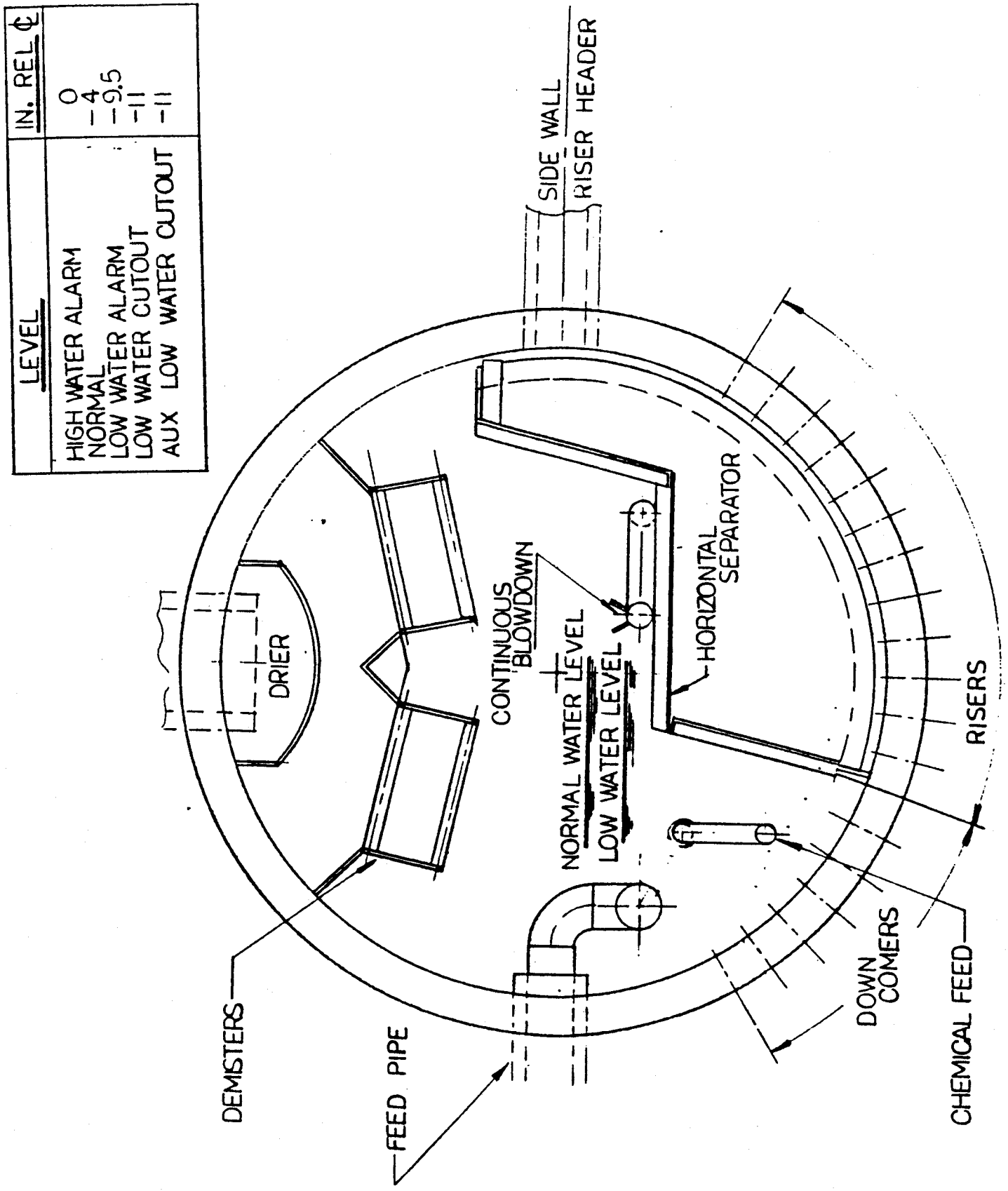

Figure 6: Arrangement of Drum Internals

STANDARD FOR THE QUALIFICATION AND CERTIFICATION OF RESOURCE RECOVERY FACILITY OPERATORS

SECTION 1 — INTRODUCTION

1.1 Scope and Purpose

1.1.1 Scope. This Standard covers the qualification and certification of operators of a resource recovery facility processing municipal solid waste.

1.1.2 Exclusions. This Standard does not cover facilities exclusively processing the following:

(a) hazardous waste as defined by the U.S. Environmental Protection Agency;

(b) pathological waste;

(c) sewage sludges;

(d) industrial waste exclusively from a manufacturing process; e.g., chemical waste, petroleum refinery bottoms, sander dust, etc.

This Standard also does not cover facilities with input capacities less than 1 ton per hr.

1.1.3 Purpose. This Standard provides requirements to be used in certifying operators of resource recovery facilities. These requirements recognize the knowledge, training, and experience in the physical operation of a facility needed to comply with the facility's operating permits and related environmental criteria.

This Standard does not cover the certification or validation of plant operating procedures, operating practices, facility performance, nor compliance with permit requirements.

1.2 Definitions

municipal solid waste — solid waste generated from households, residential, and commercial establishments

resource recovery facility — that portion of a solid waste management system, with materials separation as applicable, utilizing combustion processes aimed at volume reduction and reclaiming materials or energy from municipal solid waste

solid waste — unwanted or discarded materials including solid, liquid, semi-solid, or contained gaseous materials

SECTION 2 — DUTIES AND QUALIFICATIONS

2.1 Duties

This paragraph establishes the essential duties and responsibilities of the positions of chief facility operator and shift supervisor of a resource recovery facility for the purpose of identifying plant personnel to whom this Standard applies.

2.1.1 Chief Facility Operator. The chief facility operator is in direct charge and control of the operation of a resource recovery facility and is responsible for overall on-site supervision, technical direction, management, and performance of the facility including, but not limited to, the following:

(a) overall operation, maintenance, and performance of the facility;

(b) operating in accordance with established facility policies and procedures;

(c) assuring facility personnel are qualified and certified as required and trained when applicable federal, state, and local environmental regulations, or plant technology, plant policies, or plant procedures are changed;

(d) assuring facility operation is consistent with applicable federal, state, and local environmental requirements;

(e) communicating with regulatory agencies;

(f) assuring policies and procedures for proper and safe plant operations are formulated and updated periodically.

2.1.2 Shift Supervisor. The shift supervisor is in direct charge and control of the operation of a resource recovery facility during an assigned shift including, but not limited to, the following:

(a) supervising, training, and monitoring performance of personnel during an assigned shift;

(b) maintaining records of facility operations, including operational changes and abnormalities, and reports to chief facility operator;

(c) authorizing issuance of work orders for equipment repair and maintenance;

(d) assuring the facility is operated consistent with

applicable federal, state, and local environmental requirements;

(e) monitoring operations in accordance with established facility policies and procedures;

(f) undertaking actions to correct upsets or emergencies;

(g) assuring a safe workplace;

(h) communicating operational status of plant with the relieving shift supervisor at shift turnover.

2.2 Qualifications

This paragraph establishes the qualifications which shall be met by a chief facility operator or a shift supervisor prior to receiving provisional certification or operator certification under this Standard.

2.2.1 Provisional Certification. The qualifications for provisional certification of a chief facility operator or a shift supervisor of a resource recovery facility are as follows:

(a) high school diploma or equivalent (GED, or associates degree or higher);

(b) 5 years of experience in general industry, industrial process, or power plant operations. Completion of a baccalaurate degree in physical science or engineering, or 60 credits of course work in the following subjects, from an institute accredited to issue baccalaureate degrees, may be substituted for up to 2 years of experience:

(1) advanced mathematics;

(2) chemistry;

(3) fluid dynamics;

(4) thermodynamics;

(5) materials science;

(6) combustion theory;

(7) environmental, mechanical, civil, chemical, or electrical engineering.

(c) an understanding of resource recovery facility operations adequate to pass a general examination, which covers the body of knowledge listed in para. 3.1. An applicant may retake this examination as frequently as it is offered.

2.2.2 Operator Certification. The qualifications for operator certification of a chief facility operator or a shift supervisor of a resource recovery facility are as follows:

(a) hold a valid provisional certificate;

(b) document 6 months of satisfactory employment at the level of chief facility operator or shift supervisor in that resource recovery facility.

(c) have an understanding of the resource recovery facility operations adequate to pass a site-specific examination which covers a detailed body of knowledge specific to that resource recovery facility which shall include, but not be limited to, an understanding of control room operations and boiler or turbine operations and applicable federal, state, and local environmental requirements. A candidate may retake this examination only after documentation of an additional 6 months of employment at the level of chief facility operator or shift supervisor in the resource recovery facility for which the certificate would be valid. This examination is covered in para. 3.2.

2.3 Transfer of Certification

This paragraph establishes the qualifications by which a certification may be transferred to another facility.

2.3.1 Provisional Certification. Provisional certificates are transferable between facilities.

2.3.2 Transfer of Operator Certification. The holder of a current operator certification for a resource recovery facility may transfer such certification to another facility of similar technology provided that the holder demonstrates employment at the first facility which is satisfactory and has not been interrupted for more than 6 months (cumulative) during the period for which the certificate was valid. To transfer an operator certification to a resource recovery facility of dissimilar technology, the requirements of paras. 2.2.2(b) and (c) shall be met for the new facility.

2.4 Renewal of Provisional Certification

Certification shall be renewed subject to the following requirements:

2.4.1 Renewal of Provisional Certification. Provisional certification shall be renewed subject to the following requirements:

(a) Employment. A provisional certification shall be renewed upon demonstration of satisfactory employment in the management, operation, or maintenance of a resource recovery facility for at least 3 of the last 5 years.

2.4.2 Renewal of Operator Certification. Operator certification shall be renewed subject to the following requirements:

(a) Employment. A certified chief facility operator or shift supervisor shall demonstrate at least 18 months of the last 3 years of satisfactory employment at the resource recovery facility in the applicable level of chief facility operator or shift supervisor.

(b) Demonstration of Knowledge. The certified chief facility operator or shift supervisor shall demonstrate

knowledge of operations required to comply with any revisions to applicable federal, state, and local environmental requirements currently applicable to the resource recovery facility for which the certificate would be valid, as well as adequate knowledge of operations related to any significant technical or design modification currently in use in the resource recovery facility.

2.5 Expiration of Certification

Operator certification shall be renewed subject to the following requirements.

2.5.1 An expired provisional certification shall not be renewed.

2.5.2 An expired operator certification shall not be renewed.

SECTION 3 — TESTING REQUIREMENTS AND PROCEDURES

3.1 General Examination for Provisional Certification

The general examination shall be a 3 hr examination made up of not less than 100 nor more than 150 questions. The examination shall be structured as a closed book, multiple choice, written examination in three areas divided as follows:

Subject matter covering, but not limited to:

(a) 25% of the questions on solid waste collection, transfer, and management:

(1) municipal solid waste composition;

(2) collection techniques;

(3) seasonal industrial, and legislative impact on the character of refuse;

(4) the impact on the character of the refuse due to composting, source reduction, and recycling;

(5) land fills;

(6) ash disposal;

(7) environmental regulations and requirements.

(b) 25% of the questions on theory:

(1) chemistry;

(2) thermodynamics;

(3) combustion;

(4) mechanical and electrical operation and technology;

(5) air pollution control technology;

(6) air emission stack monitoring.

(c) 50% of the questions on the operation of a resource recovery facility:

(1) material handling equipment;

(2) boiler operations;

(3) generator and turbine operations;

(4) control room operations;

(5) general operations and maintenance procedures and techniques;

(6) continuous emission monitors and their calibrations;

(7) ash handling and disposal operations; and

(8) worker safety.

The general examination questions for provisional certification shall be based on the provisional certification guidelines contained in Section A2 of Appendix A.

A candidate must achieve at least a 70% grade overall and at least 50% in each of the above categories.

3.2 Site-Specific Examination for Operator Certification

3.2.1 Oral Examination. The site-specific examination shall be an oral examination administered, whenever possible, at the resource recovery facility site, and shall be based on a knowledge of the operational, preventive maintenance, and safety procedures and practices of the facility.

3.2.2 Subject Matter. The subject matter of the site-specific examination for chief facility operator and shift supervisor shall differ based on the requirements for basic and detailed knowledge as delineated in Appendix A, covering the following areas:

(a) refuse and ash handling;

(b) combustion processing;

(c) steam cycle;

(d) electrical;

(e) environmental controls;

(f) safety;

(g) administrative policy (chief facility operator only).

3.2.3 Grading of Examination. The grading of the site-specific examination shall be as follows.

(a) The site-specific examination shall be graded and a written record made by each member of a board of examiners.

(b) Oral questions and answers shall be recorded electronically.

(c) The board of examiners shall evaluate candidates for operator certification using the following criteria:

(1) technical knowledge;

(2) ability to solve problems;

(3) understanding of integrated plant operations.

(d) A candidate's answers shall be graded on a pass/fail basis according to ASME guidelines.

(e) All members of the board of examiners must pass the applicant if certification is to be granted.

3.2.4 Board of Examiners. The board of examiners shall consist of three members, one each from ASME, the resource recovery industry, and the regulatory agency or jurisdictional authority applicable to the facility.

(a) A representative from the facility shall be allowed to observe the site-specific examination.

(b) All members of the board of examiners shall comply with the ASME requirements on proprietary and confidential information.

SECTION 4 — CERTIFICATION PROCESS

4.1 Introduction

This Section covers the process necessary to certify chief facility operators and shift supervisors of resource recovery plants in accordance with this Standard.

4.2 Provisional Certificate

Provisional certificates indicate that the holder has demonstrated general knowledge of resource recovery plants. Provisional certificates are not geographically limited. Provisional certificates expire 5 years after issuance unless the general knowledge of the operator is maintained by working in a resource recovery facility as indicated in para. 2.4.1. The provisional certificate is a prerequisite for operator certification.

4.2.1 Application Process. Each applicant for provisional certification shall complete a written application. The application form shall request sufficient information to allow for verification of the applicant's education and experience in accordance with the requirements of para. 2.2.1. The application shall include a brief history of any previously held provisional certificates. See Appendix B for the procedure for applying for certification.

Examinations shall be scheduled at a frequency and at locations necessitated by the number and addresses of applications received.

4.2.2 Provisional Certificate Issuance. Each candidate who passes the general knowledge examination shall be issued a provisional certificate. Each provisional certificate shall contain the following minimum information:

(a) identification as a provisional certificate;

(b) certified individual's full name;

(c) photograph of certified individual;

(d) effective date.

Each certificate shall contain a sequential number to assure traceability and accuracy, and shall be signed by a duly authorized ASME designee.

Each certificate shall be registered and available in an ASME publication which is updated periodically.

4.2.3 Provisional Certificate Renewal. Certificate renewal by retest shall be required unless documentation is maintained by the certified person to satisfy para. 2.4.1.

4.3 Operator Certificate

Operator certificates indicate that the holder has demonstrated sufficient detailed knowledge to operate a resource recovery facility properly as described in this Standard. The certificate is not transportable and applies only to the facility listed. The certificate shall expire 5 years after its issue date unless renewed.

4.3.1 Application Process. Each applicant for operator certification shall complete a written application which allows for verification that the applicant's education and experience meet the requirements of this Standard. Applicants possessing valid provisional certificates will become candidates for operator certification following verification of their application by ASME. Applications shall include a brief history of all previously held operator certificates. See Appendix B for the procedure for applying for certification.

4.3.2 Operator Certificate Issuance. Each candidate who passes an operator certification examination will be issued an operator certificate. Each certificate will contain the following minimum information:

(a) identification as an operator certificate;

(b) certified individual's full name;

(c) a photograph of the certified individual;

(d) position certification contemplates;

(e) name and location of the facility contemplated.

Each certificate shall contain a sequential number to assure traceability and accuracy, and shall be signed by a duly authorized ASME designee.

Each certificate shall be registered in an ASME publication which is updated periodically.

4.3.3 Operator Certificate Renewal. Renewal of the operator certificate may be by retest or through a written submission. A renewal submission must satisfy the ASME that the certificate holder has maintained knowledge of the indicated facility and has acquired detailed knowledge of any facility component and permit changes occurring during the previous 5 years [para. 2.4.2(b)]. Procedures for renewal by written submission shall be available from ASME.

4.3.4 Changes to Facility. A change in the name or ownership of a facility shall not invalidate the operator certificate. If such a change in ownership involves changes in equipment and/or operating procedures, certificate holders shall demonstrate detailed knowledge of these changes at the time of the next certificate renewal.

4.4 Revocation of Certification

Provisional or operator certification may be revoked by ASME for reasons of falsifying or providing inaccurate information in the certification process.

4.5 Appeals

Appeals regarding provisional or operator certification shall be conducted in accordance with ASME's appeal policies and procedures.