SW-11-021-7 4204 19961201 P-0

Permit:	42-04
Name:	Halifax County MSW Landfill, Revised Transition Plan
County:	Halifax
Shipped Date:	
Box:	SW-11-021
Document Type:	Other (O)
Document Date:	12/1/1996
Division:	Waste Management (WM)
Sub-Division:	Solid Waste (SW)
Document Category:	Facility (F)
Document Group:	Authorization or Permit (P)
Description:	Map: . Maps in Roll:

HALIFAX COUNTY SOLID WASTE DEPARTMENT
HALIFAX COUNTY, NORTH CAROLINA

MUNICIPAL SOLID WASTE LANDFILL
REVISED TRANSITION PLAN
DECEMBER 1996

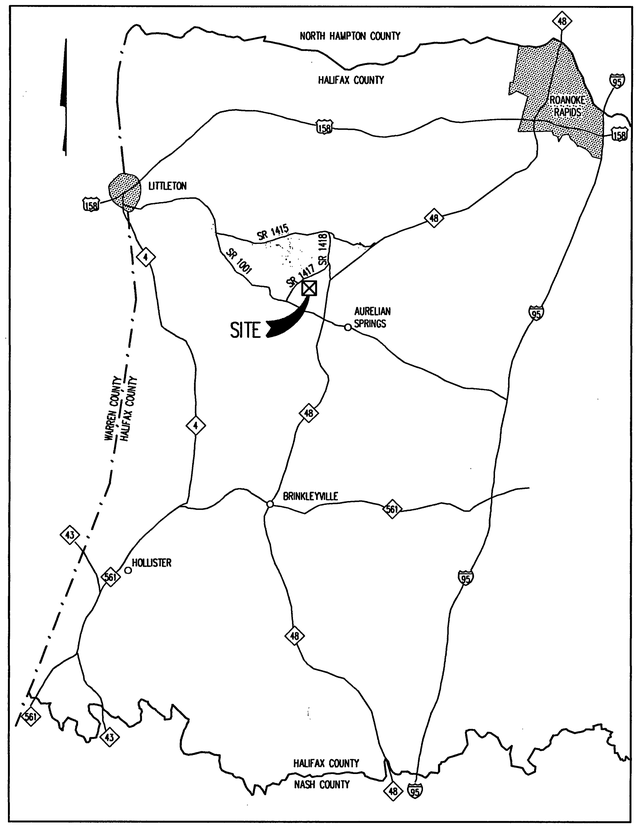

SHEET NO.	DRAWING NO.	TITLE
1	G1	REGIONAL CHARACTERIZATION MAP
2	G2	LOCAL AREA MAP
3	G3	LOCAL AREA PHOTOS
4	G4	OVERALL FACILITY PLAN
5	G5	EXISTING SITE CONDITIONS
6	FC1	PROPOSED FINAL COVER CONTOURS
7	FC2	FINAL COVER DETAILS
8	M1	MISCELLANEOUS DETAILS
9	EC1	EROSION CONTROL PLAN
10	EC2	EROSION CONTROL DETAILS
11	EC3	EROSION CONTROL DETAILS
12	RG1	REGULATORY CROSS SECTION
13	P1	PHASING PLAN
14	P2	PHASING PLAN

G.N. RICHARDSON & ASSOCIATES, INC.
Engineering and Geological Services
417 N. BOYLAN AVENUE RALEIGH, N.C. 27603
PHONE-919-828-0577 FAX-919-828-3899

D:\-CAD\HALIFAX-7\AMENDED\s-cover.DWG DATE: DEC 30, 1996 TIME: 11:58 AM

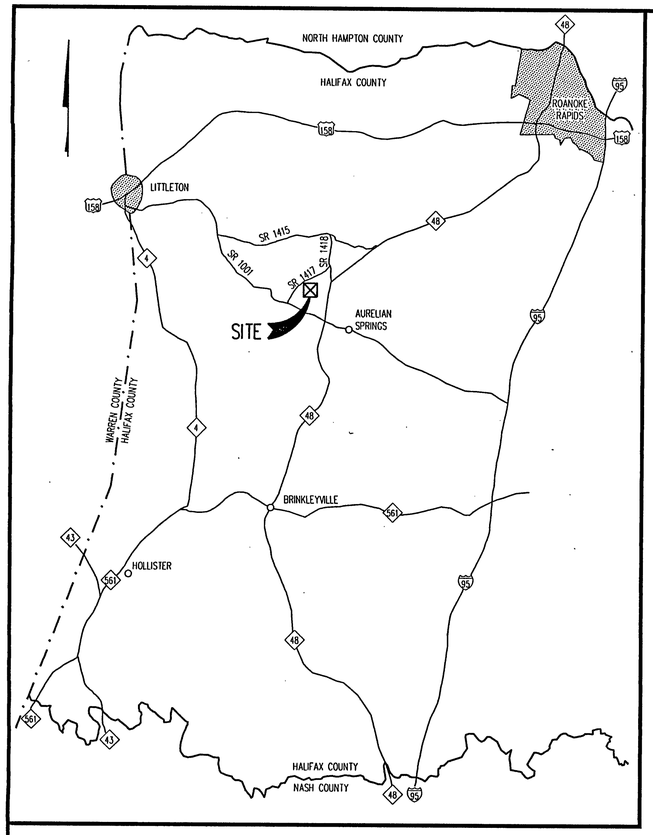

NOTES

1. No public water supply wells or surface water intakes exist within 2 miles of the permitted facility boundary.

2. No residential subdivisions exist within 2 miles of the permitted facility boundary.

3. No public use airports exist within 5 miles of the permitted facility boundary.

4. Distances in Statute Miles

5. Map is a composite excerpt of indicated quandrangles.

UNITED STATES
DEPARTMENT OF THE INTERIOR
GEOLOGICAL SURVEY

STATE OF NORTH CAROLINA
DEPARTMENT OF NATURAL AND ECONOMIC RESOURCES
RALEIGH, NORTH CAROLINA

THELMA QUADRANGLE
NORTH CAROLINA
7.5 MINUTE SERIES (TOPOGRAPHIC)

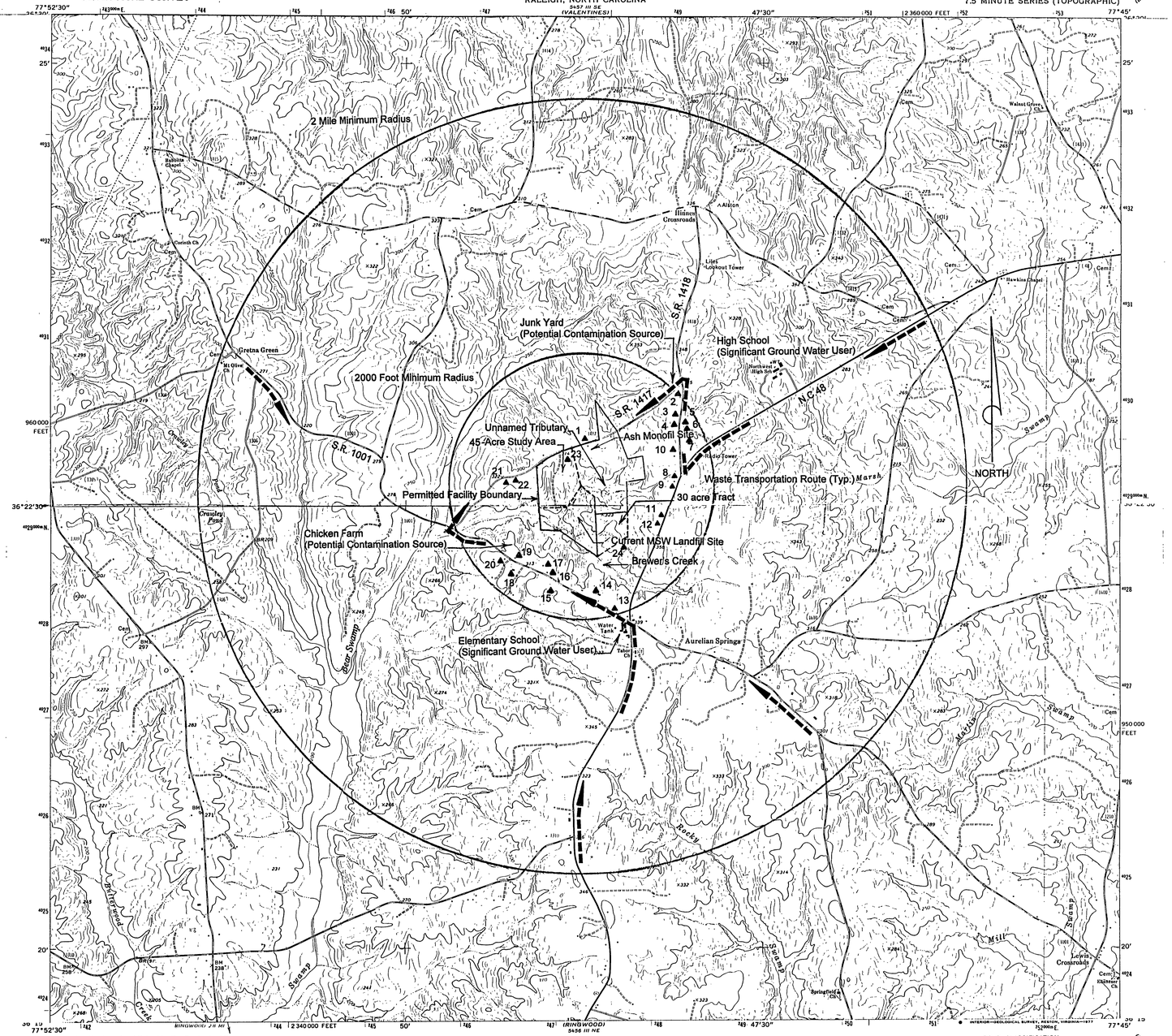

Mapped, edited, and published by the Geological Survey

Control by USGS, NOS/NOAA, and USCE

Topography by photogrammetric methods from aerial photographs taken 1972. Field checked 1973

Projection and 10,000-foot grid ticks: North Carolina coordinate system (Lambert conformal conic)
1000-meter Universal Transverse Mercator grid ticks, zone 18, shown in blue. 1927 North American datum

Fine red dashed lines indicate selected fence and field lines where generally visible on aerial photographs. This information is unchecked

UTM GRID AND 1973 MAGNETIC NORTH DECLINATION AT CENTER OF SHEET

SCALE 1:24 000

CONTOUR INTERVAL 10 FEET
NATIONAL GEODETIC VERTICAL DATUM OF 1929

THIS MAP COMPLIES WITH NATIONAL MAP ACCURACY STANDARDS
FOR SALE BY U. S. GEOLOGICAL SURVEY, RESTON, VIRGINIA 22092
A FOLDER DESCRIBING TOPOGRAPHIC MAPS AND SYMBOLS IS AVAILABLE ON REQUEST

QUADRANGLE LOCATION

ROAD CLASSIFICATION

Primary highway, hard surface — Light-duty road, hard or improved surface
Secondary highway, hard surface — Unimproved road
Interstate Route — U. S. Route — State Route

AURELIAN SPRINGS, N.C.
N3615—W7745/7.5

1973

AMS 5456 IV SE—SERIES V842

G.N. RICHARDSON & ASSOCIATES, INC.
Engineering and Geological Services
417 N. BOYLAN AVENUE RALEIGH, N.C. 27603
PHONE-919-828-0577 FAX-919-828-3899

PROJECT TITLE: HALIFAX COUNTY MUNICIPAL SOLID WASTE LANDFILL

DRAWING TITLE: FIGURE 1A REGIONAL CHARACTERIZATION MAP

DESIGNED BY: G.D.G.	DRAWN BY: A.W.H.
CHECKED BY: G.N.R.	PROJECT NO.: HALIFAX-7
SCALE: AS SHOWN	DATE: OCT, 1996
SHEET NO. 1	DRAWING NO. G1

d:\-cad\halifax-7\amended\FIG-1A.DWG DATE: OCT 10, 1996 TIME: 9:15 AM

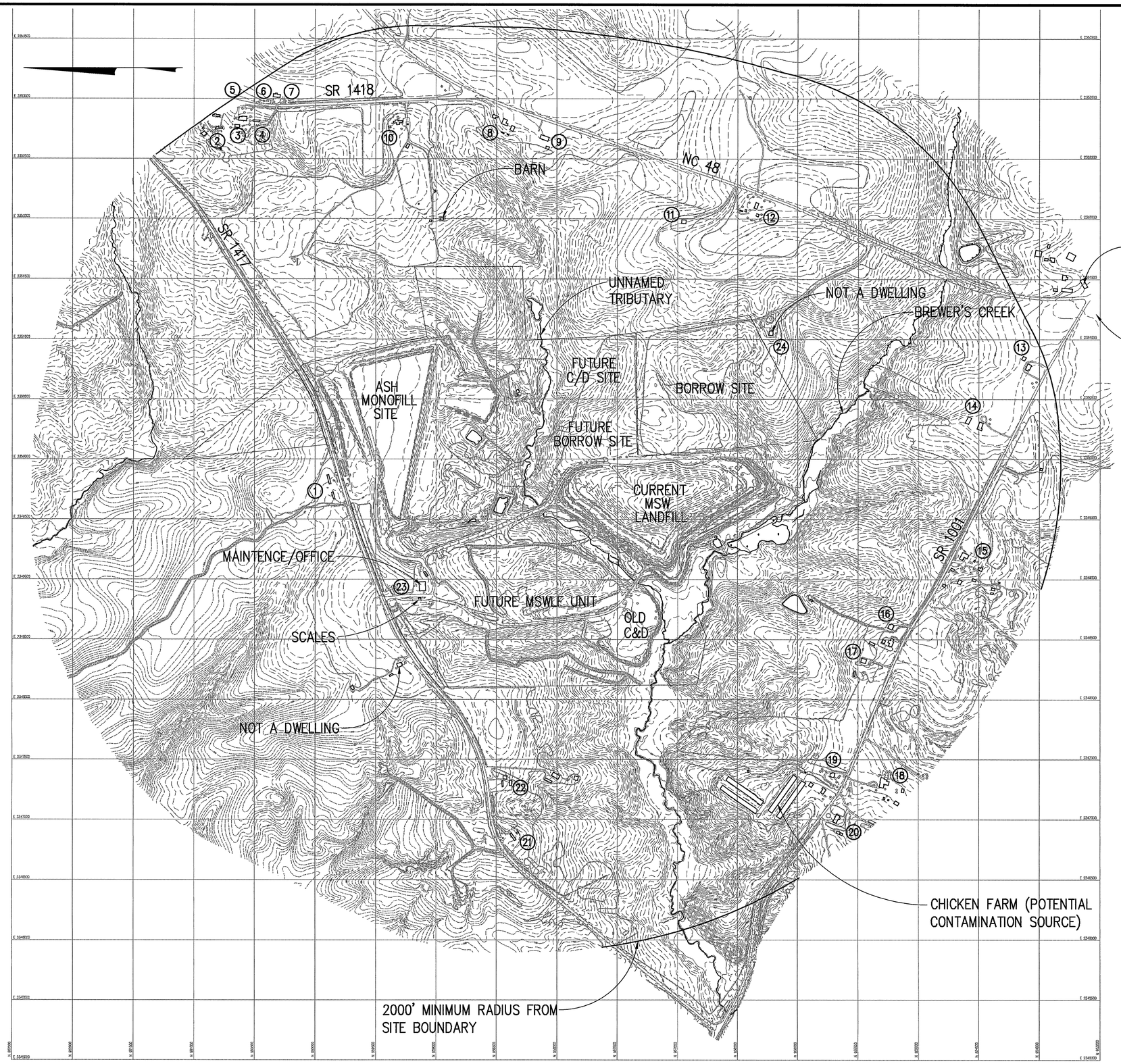

POTABLE WELL SURVEY

REF. NO.	OWNER NAME	STRUCTURAL TYPE
1	LUG, LEONARD	RESIDENCE
2	ALSTON, JR.	RESIDENCE
3	JONES, TOMMY	RESIDENCE
4	ALSTON, MARCHELL	RESIDENCE
5	HAWKINS, RONALD	RESIDENCE
6	DAVIS, ODELIA	RESIDENCE
7	DAVIS, JIMMY	RESIDENCE
8	WARREN, HARRY	RESIDENCE
9	JOHNSTON, MICHAEL	RESIDENCE
10	BUTTS, ALLEN	RESIDENCE
11	WARREN, CHRIS	RESIDENCE
12	UNKNOWN	RESIDENCE
13	DUKE, FRED, JR.	RESIDENCE
14	DUKE, FRED, SR.	RESIDENCE
15	MAYO, BILLY	RESIDENCE
16	LANCASTER, SANKEY	RESIDENCE
17	UNKNOWN	RESIDENCE
18	UNKNOWN	RESIDENCE
19	BUTTS, JESSIE	RESIDENCE
20	UNKNOWN	RESIDENCE
21	UNKNOWN	RESIDENCE
22	UNKNOWN	RESIDENCE
23	HALIFAX COUNTY	LANDFILL
24	BREWER	FORMER RESIDENCE

BASED ON WATER WELL SURVEYS CONDUCTED IN 1991 & 1994

NOTES:

1. THE PROPERTY IS ZONED AGRICULTURAL/RESIDENTIAL.
2. NO COMMERCIAL/INDUSTRIAL BUILDINGS OR HISTORIC SITES EXIST WITHIN A 2000 FOOT RADIUS OF THE SITE.
3. NO PORTIONS OF THE SITE EXIST WITHIN A 100 YEAR FLOODPLAIN, PER FIRM MAPPING.
4. MSW CONTOURS CURRENT AS OF MARCH 1996.
5. THERE ARE NO UNDERGROUND UTILITIES WITHIN THE FACILITY.
6. THERE ARE NO PUBLIC WATER SUPPLY SURFACE INTAKES WITHIN 2000 FEET OF THE SITE.

DIGITAL BASE MAPPING PERFORMED BY PIEDMONT AERIAL SERVICES

0 400' 800' 1200'
1" = 400'

DATE	NO.	REVISION
3/18/97		TRANSITION PLAN AMENDMENT

G.N. RICHARDSON & ASSOCIATES, INC.
Engineering and Geological Services
417 N. BOYLAN AVENUE RALEIGH, N.C. 27603
PHONE-919-828-0577 FAX-919-828-3899

SEAL

SEAL

PROJECT TITLE: HALIFAX COUNTY MUNICIPAL SOLID WASTE LANDFILL

DRAWING TITLE: LOCAL AREA MAP

DESIGNED BY: G.D.G.	DRAWN BY: A.W.H.
CHECKED BY: G.N.R.	PROJECT NO.: HALFAX-5
SCALE: AS SHOWN	DATE: OCT, 1996
SHEET NO. 2	DRAWING NO. G2

D:\-CAD\HALFAX-7\AMEND2D\FIG-1B.DWG DATE: MAR 18, 1997 TIME: 12:17 PM

NOTES

1. The property is zoned agricultural/residential.
2. No commercial or industrial buildings or historic sites exist within a 2000 foot radius of the site.
3. No portions of the site exist within a 100-year floodplain, per FIRM mapping.

D:\~CAD\HALFAX-7\AMENDED\FIG-1C.DWG DATE: OCT 11, 1996 TIME: 9:45 AM

G.N. RICHARDSON & ASSOCIATES, INC.
Engineering and Geological Services
417 N. BOYLAN AVENUE RALEIGH, N.C. 27603
PHONE-919-828-0577 FAX-919-828-3899

SEAL: NORTH CAROLINA PROFESSIONAL ENGINEER SEAL 021666 PIETER K. SCHEER 12/30/96

SEAL: NORTH CAROLINA PROFESSIONAL ENGINEER SEAL 8895 GREGORY N. RICHARDSON 12/31/96

PROJECT TITLE: HALIFAX COUNTY MUNICIPAL SOLID WASTE LANDFILL

DRAWING TITLE: FIGURE 1C LOCAL AREA PHOTOS

DESIGNED BY: G.D.G.	DRAWN BY: A.W.H.
CHECKED BY: G.N.R.	PROJECT NO.: HALIFAX-7
SCALE: AS SHOWN	DATE: 1"= 400'
SHEET NO. 3	DRAWING NO. G3

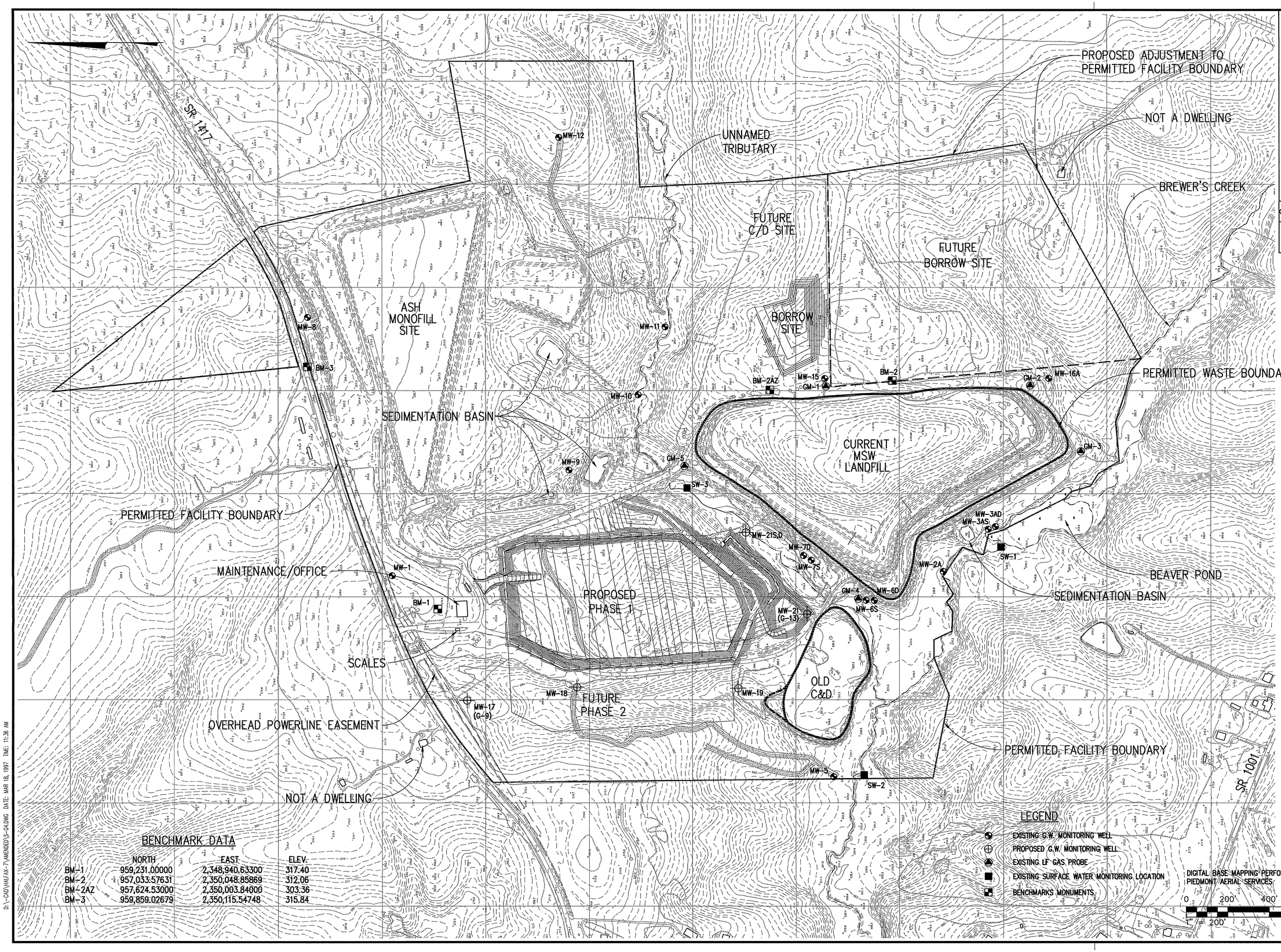

BENCHMARK DATA

	NORTH	EAST	ELEV.
BM-1	959,231.00000	2,348,940.63300	317.40
BM-2	957,033.57631	2,350,048.85869	312.06
BM-2AZ	957,624.53000	2,350,003.84000	303.36
BM-3	959,859.02679	2,350,115.54748	315.84

NO.	REVISION	DATE
	TRANSITION PLAN AMENDMENT	3/18/97

G.N. RICHARDSON & ASSOCIATES, INC.
Engineering and Geological Services
417 N. BOYLAN AVENUE RALEIGH, N.C. 27603
PHONE-919-828-0577 FAX-919-828-3899

SEAL

SEAL

PROJECT TITLE: HALIFAX COUNTY MUNICIPAL SOLID WASTE LANDFILL

DRAWING TITLE: OVERALL FACILITY PLAN

DESIGNED BY: G.D.G.	DRAWN BY: A.W.H.
CHECKED BY: G.N.R.	PROJECT NO.: HALFAX-7
SCALE: AS SHOWN	DATE: MAY, 1996
SHEET NO. 4	DRAWING NO. G4

D:\-CAD\HALFAX-7\AMENDED\S-CK.DWG DATE: MAR 18, 1997 TIME: 11:38 AM

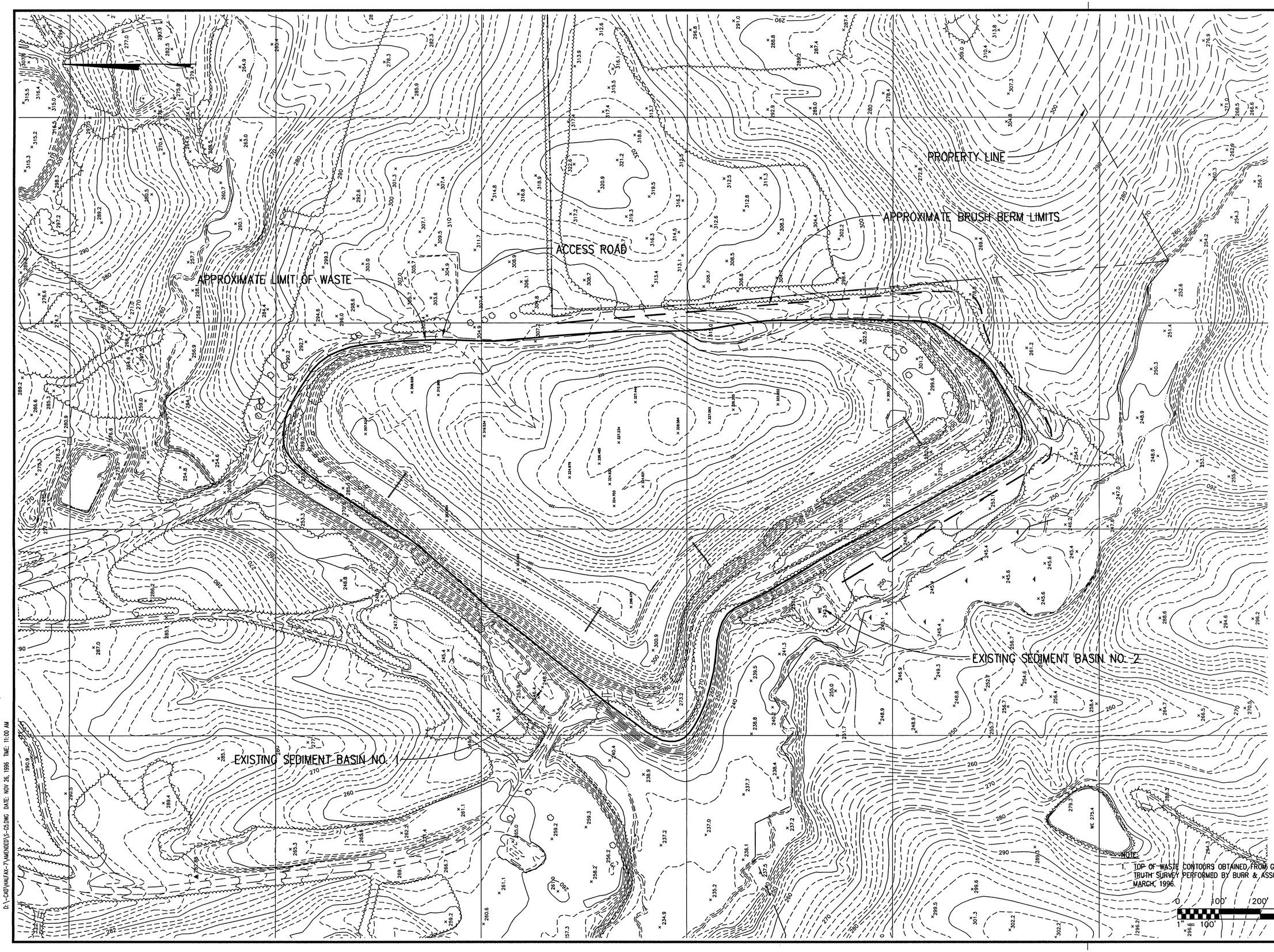

NOTE:
1. TOP OF WASTE CONTOURS OBTAINED FROM GROUND TRUTH SURVEY PERFORMED BY BURR & ASSOCIATES MARCH, 1996.

D:\-CAD\HALIFAX-7\AMENDED\S-CSLDWG DATE: NOV 26, 1996 TIME: 11:00 AM

G.N. RICHARDSON & ASSOCIATES, INC.
Engineering and Geological Services
417 N. BOYLAN AVENUE RALEIGH, N.C. 27603
PHONE-919-828-0577 FAX-919-828-3899

SEAL

PROJECT TITLE: HALIFAX COUNTY MUNICIPAL SOLID WASTE LANDFILL

DRAWING TITLE: EXISTING SITE CONDITIONS

DESIGNED BY: G.D.G.	DRAWN BY: A.W.H.
CHECKED BY: G.N.R.	PROJECT NO.: HALIFAX-7
SCALE: AS SHOWN	DATE: OCT, 1996
SHEET NO. 5	DRAWING NO. G5

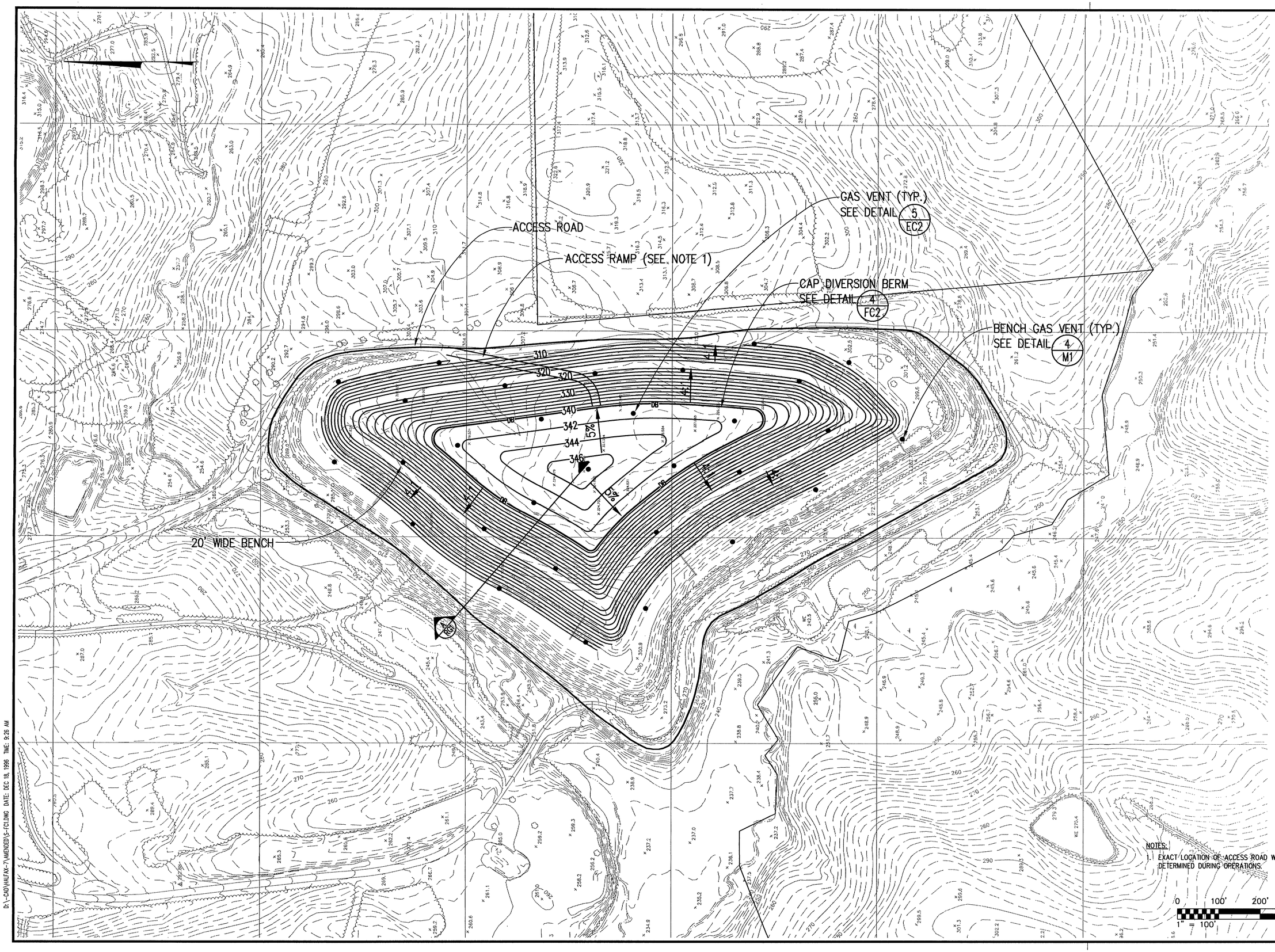

NOTES:
1. EXACT LOCATION OF ACCESS ROAD WILL BE DETERMINED DURING OPERATIONS.

0 100' 200' 300'
1" = 100'

D:\-CAD\HALIFAX-7\AMENDED\S-FC1.DWG DATE: DEC 18, 1996 TIME: 9:26 AM

G.N. RICHARDSON & ASSOCIATES, INC.
Engineering and Geological Services
417 N. BOYLAN AVENUE RALEIGH, N.C. 27603
PHONE-919-828-0577 FAX-919-828-3899

SEAL: NORTH CAROLINA PROFESSIONAL ENGINEER SEAL 021666 PIETER K. SCHEER 12/30/96

SEAL: NORTH CAROLINA PROFESSIONAL ENGINEER SEAL 8895 GREGORY N. RICHARDSON 12/31/96

PROJECT TITLE: HALIFAX COUNTY MUNICIPAL SOLID WASTE LANDFILL

DRAWING TITLE: PROPOSED FINAL COVER CONTOURS

DESIGNED BY: P.K.S.	DRAWN BY: A.W.H.
CHECKED BY: G.N.R.	PROJECT NO.: HALIFAX-7
SCALE: AS SHOWN	DATE: DEC, 1996
SHEET NO. 6	DRAWING NO. FC1

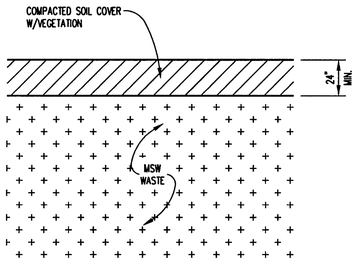

PRE-1991 FINAL COVER

DETAIL 1/FC2
SCALE: 1"= 4'-0"

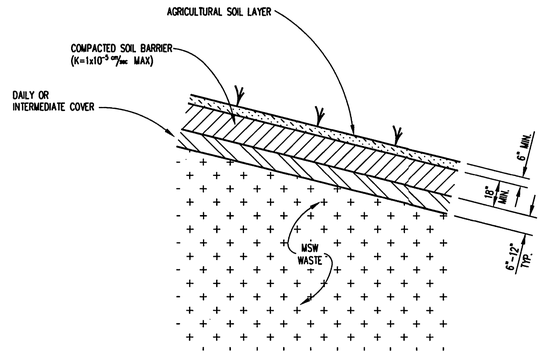

POST-1991 FINAL COVER (BENCHES & 4H:1V SLOPES)

DETAIL 2/FC2
SCALE: 1"= 4'-0"

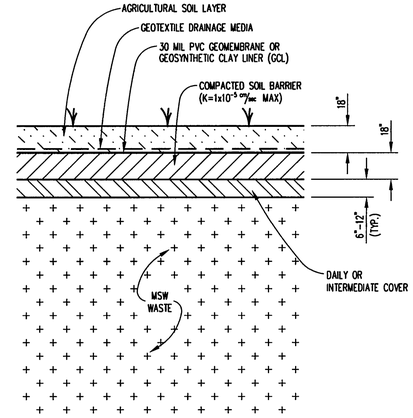

POST-1991 FINAL COVER (5% CAP)

DETAIL 3/FC2
SCALE: 1"= 4'-0"

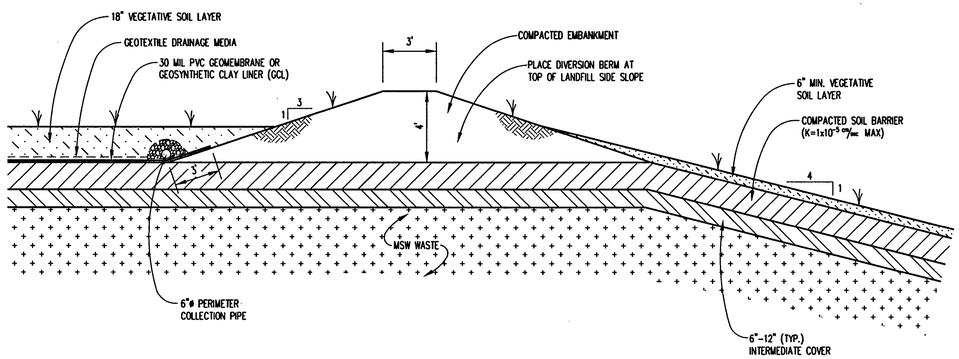

CAP DIVERSION BERM

DETAIL 4/FC2
SCALE: 1"= 4'-0"

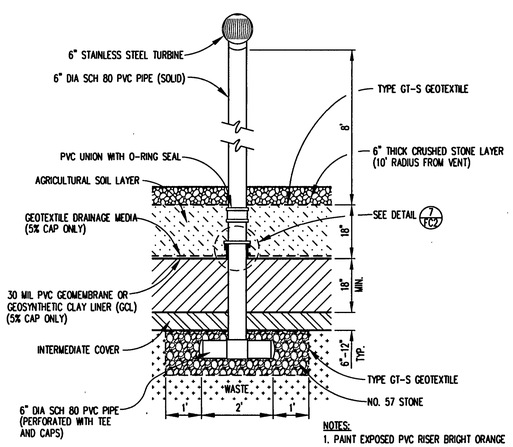

NOTES:
1. PAINT EXPOSED PVC RISER BRIGHT ORANGE

TYPICAL END VIEW OF GAS VENT (5% CAP)

DETAIL 5/FC2
SCALE: 1"= 2'-0"

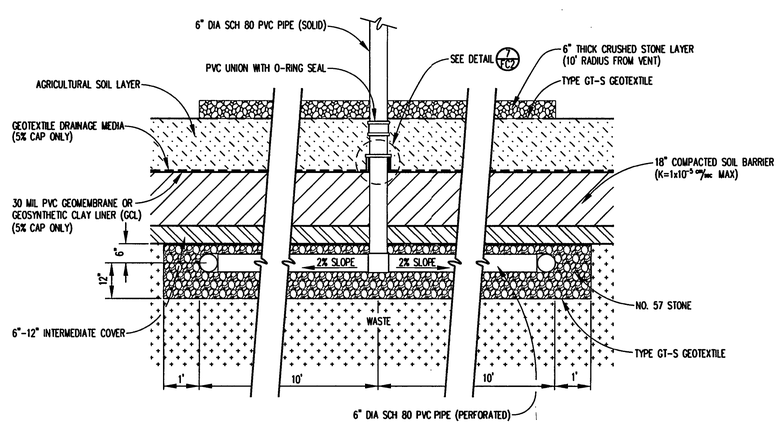

TYPICAL SIDE VIEW OF GAS VENT (5% CAP)

DETAIL 6/FC2
SCALE: 1"= 2'-0"

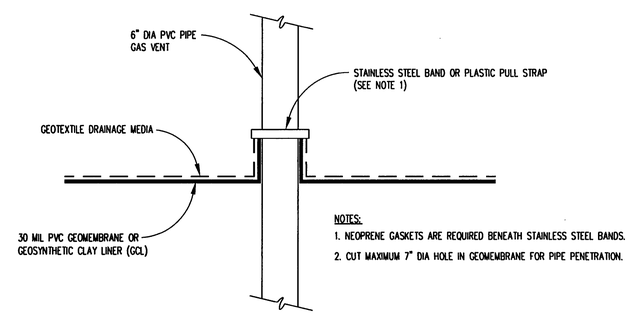

NOTES:
1. NEOPRENE GASKETS ARE REQUIRED BENEATH STAINLESS STEEL BANDS.
2. CUT MAXIMUM 7" DIA HOLE IN GEOMEMBRANE FOR PIPE PENETRATION.

TYPICAL GAS VENT FINAL COVER PENETRATION (5% CAP)

DETAIL 7/FC2
SCALE: 1"= 1'-0"

0 4' 8' 12'
1" = 4'-0"

0 2' 4' 6'
1" = 2'

0 1' 2' 3'
1" = 1'-0"

NO.	DATE	REVISION

G.N. RICHARDSON & ASSOCIATES, INC.
Engineering and Geological Services
417 N. BOYLAN AVENUE RALEIGH, N.C. 27603
PHONE-919-828-0577 FAX-919-828-3899

SEAL: NORTH CAROLINA PROFESSIONAL ENGINEER SEAL 021660 PIERR K. SCHOTT 12/30/96

SEAL: NORTH CAROLINA PROFESSIONAL ENGINEER SEAL 8895 GREGORY D. RICHARDSON 12/30/96

PROJECT TITLE: HALIFAX COUNTY MUNICIPAL SOLID WASTE LANDFILL FACILITY UPGRADE

DRAWING TITLE: FINAL COVER DETAILS

DESIGNED BY: P.K.S.	DRAWN BY: A.W.H.
CHECKED BY: G.N.R.	PROJECT NO.: HALFAX-7
SCALE: AS SHOWN	DATE: JAN. 1996
SHEET NO. 7	DRAWING NO. FC2

D:\-CAD\HALFAX-7\AMENDED\s-fc2.DWG DATE: NOV 21, 1996 TIME: 3:51 PM

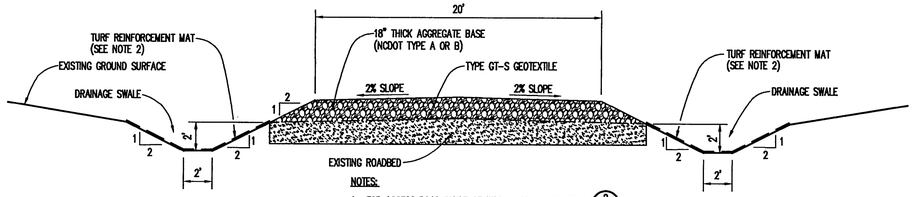

NOTES:
1. FOR ACCESS ROAD INSIDE OF WASTE LIMITS, SEE DETAIL 2/M1
2. INSTALL TURF REINFORCEMENT MAT ACCORDING TO MANUFACTURER'S RECOMMENDATIONS.

ACCESS ROAD–OUTSIDE OF WASTE LIMITS

DETAIL 1/M1
SCALE: 1"= 5'

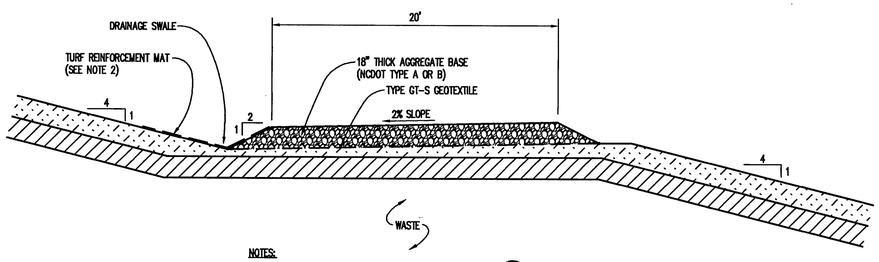

NOTES:
1. FOR ACCESS ROAD OUTSIDE OF WASTE LIMITS, SEE DETAIL 1/M1
2. INSTALL TURF REINFORCEMENT MAT ACCORDING TO MANUFACTURER'S RECOMMENDATIONS.

ACCESS ROAD–INSIDE OF WASTE LIMITS

DETAIL 2/M1
SCALE: 1"= 5'

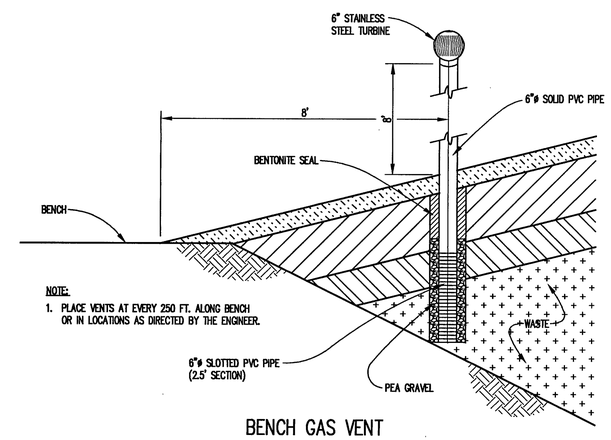

NOTE:
1. PLACE VENTS AT EVERY 250 FT. ALONG BENCH OR IN LOCATIONS AS DIRECTED BY THE ENGINEER.

BENCH GAS VENT

DETAIL 4/M1
SCALE: 1"= 2'-0"

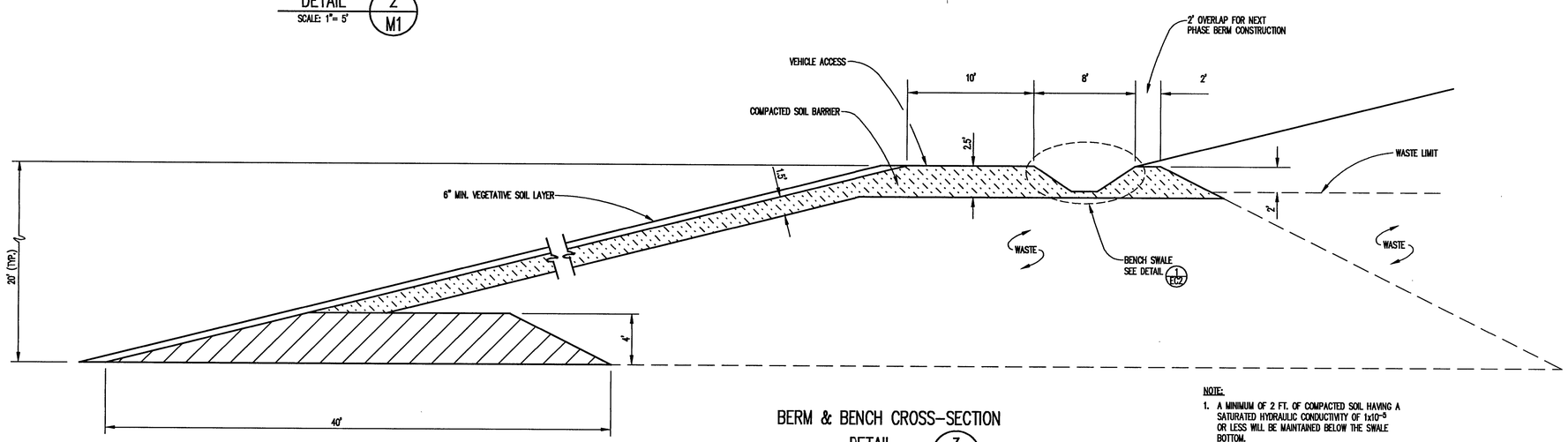

NOTE:
1. A MINIMUM OF 2 FT. OF COMPACTED SOIL HAVING A SATURATED HYDRAULIC CONDUCTIVITY OF $1x10^{-5}$ OR LESS WILL BE MAINTAINED BELOW THE SWALE BOTTOM.

BERM & BENCH CROSS–SECTION

DETAIL 3/M1
SCALE: 1"= 5'-0"

0 2' 4' 6'
1" = 2'

0 5' 10' 15'
1" = 5'-0"

DATE	NO.	REVISION

G.N. RICHARDSON & ASSOCIATES, INC.
Engineering and Geological Services
417 N. BOYLAN AVENUE RALEIGH, N.C. 27603
PHONE-919-828-0577 FAX-919-828-3899

SEAL: PIETER K. SCHEER, ENGINEER, SEAL 021666, PROFESSIONAL ENGINEER, NORTH CAROLINA, 12/31/96

SEAL: GREGORY N. RICHARDSON, ENGINEER, SEAL 8895, PROFESSIONAL ENGINEER, NORTH CAROLINA, 12/31/96

PROJECT TITLE: HALIFAX COUNTY MUNICIPAL SOLID WASTE LANDFILL FACILITY UPGRADE

DRAWING TITLE: MISCELLANEOUS DETAILS

DESIGNED BY: P.K.S.	DRAWN BY: A.W.H.
CHECKED BY: G.N.R.	PROJECT NO.: HALFAX-7
SCALE: AS SHOWN	DATE: JAN, 1996
SHEET NO. 8	DRAWING NO. M1

D:\-CAD\HALFAX-7\AMENDED\s-m1.DWG DATE: NOV 26, 1996 TIME: 11:20 AM

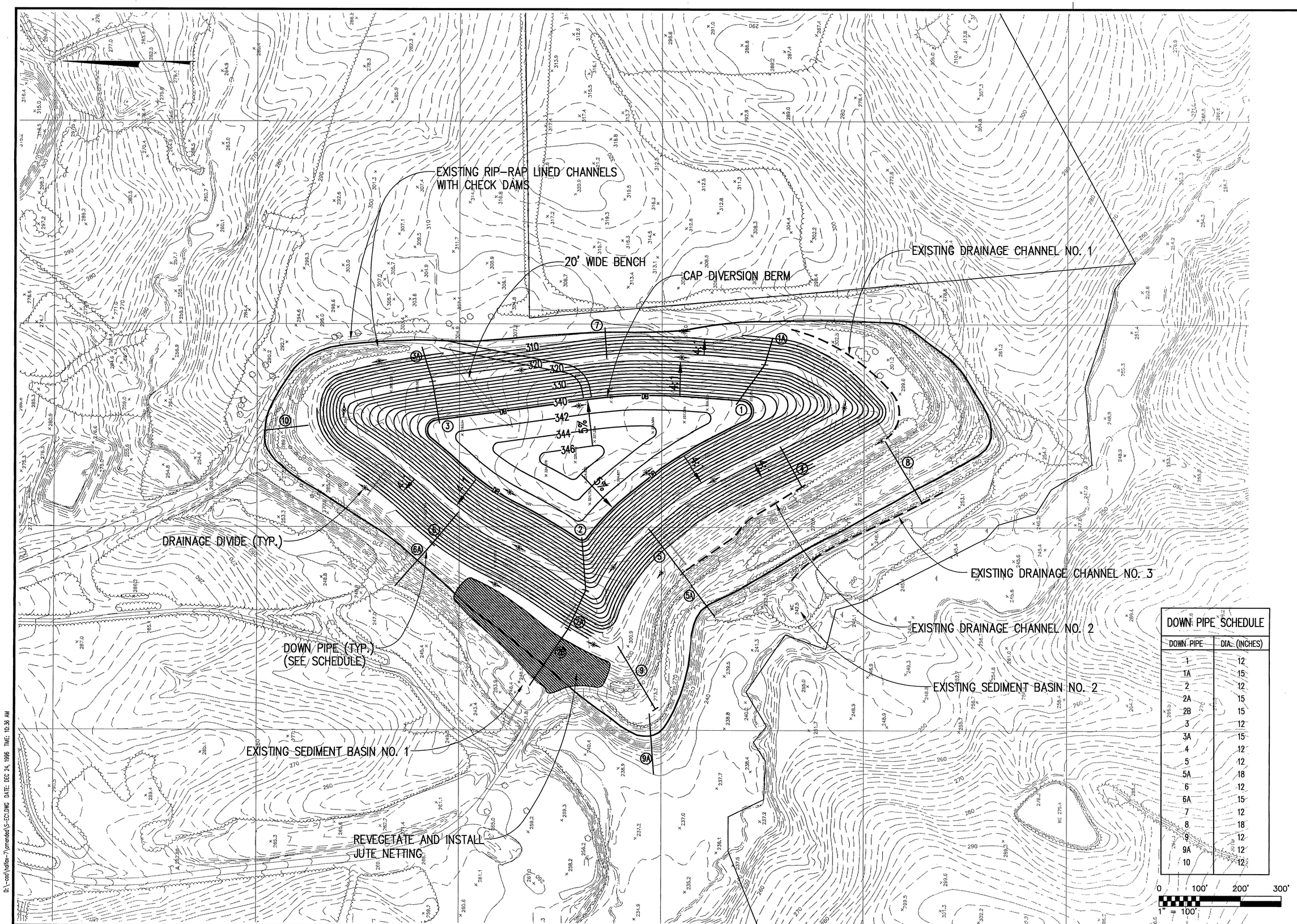

DOWN PIPE SCHEDULE	
DOWN PIPE	DIA. (INCHES)
1	12
1A	15
2	12
2A	15
2B	15
3	12
3A	15
4	12
5	12
5A	18
6	12
6A	15
7	12
8	18
9	12
9A	12
10	12

G.N. RICHARDSON & ASSOCIATES, INC.
Engineering and Geological Services
417 N. BOYLAN AVENUE RALEIGH, N.C. 27603
PHONE-919-828-0577 FAX-919-828-3899

SEAL

PROJECT TITLE: HALIFAX COUNTY MUNICIPAL SOLID WASTE LANDFILL

DRAWING TITLE: EROSION CONTROL PLAN

DESIGNED BY: P.K.S.	DRAWN BY: A.W.H.
CHECKED BY: G.D.G.	PROJECT NO.: HALIFAX-7
SCALE: AS SHOWN	DATE: NOV, 1996
SHEET NO. 9	DRAWING NO. EC1

D:\-cad\halfax-7\amended\S-EC1.DWG DATE: DEC 24, 1996 TIME: 10:36 AM

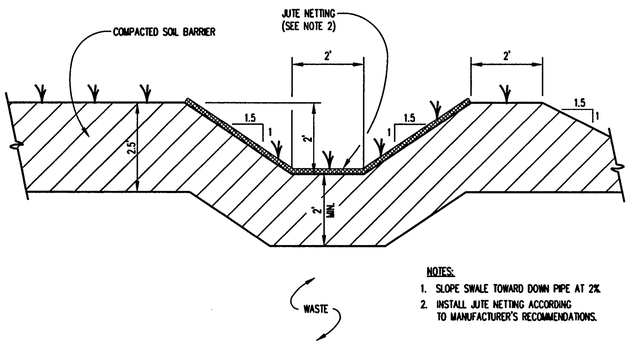

NOTES:
1. SLOPE SWALE TOWARD DOWN PIPE AT 2%.
2. INSTALL JUTE NETTING ACCORDING TO MANUFACTURER'S RECOMMENDATIONS.

BENCH SWALE (TYP.)

DETAIL 1/EC2
SCALE: 1"= 2'-0"

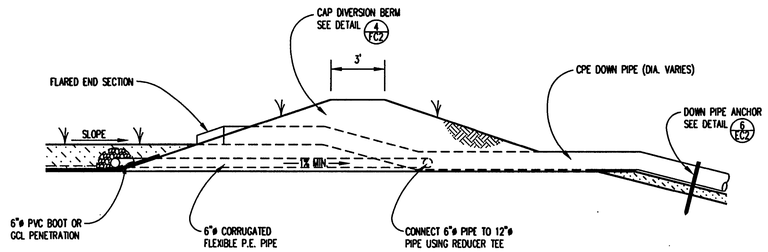

5% CAP PIPE PENETRATION

DETAIL 2/EC2
SCALE: 1"= 4'-0"

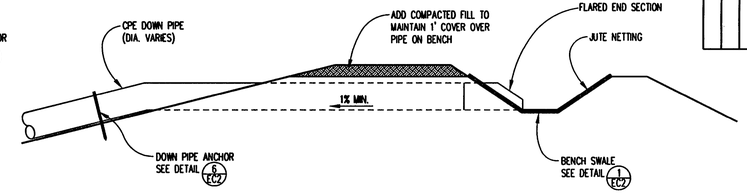

DOWN PIPE INLET-BENCH

DETAIL 3/EC2
SCALE: 1"= 4'-0"

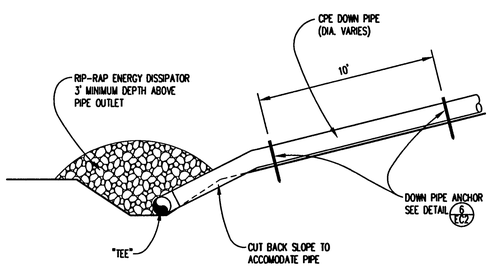

DOWN PIPE OUTLET-BENCH

DETAIL 4/EC2
SCALE: 1"= 4'-0"

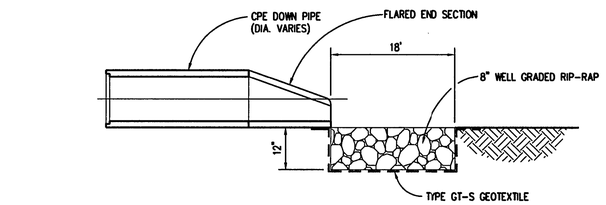

SECTION A-A

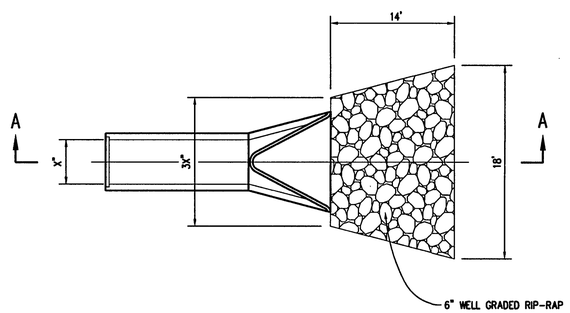

DOWN PIPE OUTLET WITH RIP-RAP APRON-BASE OF FILL
(OUTLET TO FLAT AREA)

DETAIL 5/EC2
N.T.S.

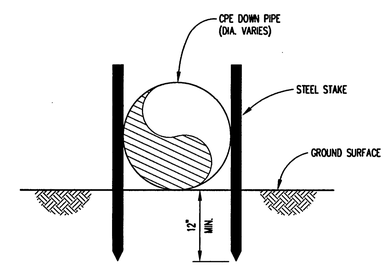

NOTES:
1. ANCHOR PIPE WITH STRAPPING UPPER HALF OF PIPE. ATTACH STRAPPING TO STEEL STAKES.
2. PLACE ANCHORS AT 10' O.C.

DOWN PIPE ANCHOR (TYP.)

DETAIL 6/EC2
SCALE: 1"= 1'-0"

0 4' 8' 12'
1" = 4'-0"

0 2' 4' 6'
1" = 2'

0 1' 2' 3'
1" = 1'-0"

NO.	DATE	REVISION

G.N. RICHARDSON & ASSOCIATES, INC.
Engineering and Geological Services
417 N. BOYLAN AVENUE RALEIGH, N.C. 27603
PHONE-919-828-0577 FAX-919-828-3899

SEAL

SEAL

SEAL

PROJECT TITLE: HALIFAX COUNTY MUNICIPAL SOLID WASTE LANDFILL FACILITY UPGRADE

DRAWING TITLE: EROSION CONTROL DETAILS

DESIGNED BY: P.K.S.	DRAWN BY: A.W.H.
CHECKED BY: G.N.R.	PROJECT NO.: HALFAX-7
SCALE: AS SHOWN	DATE: OCT, 1996
SHEET NO. 10	DRAWING NO. EC2

D:\-CAD\HALFAX-7\AMENDED\s-ec2.DWG DATE: NOV 26, 1996 TIME: 10:33 AM

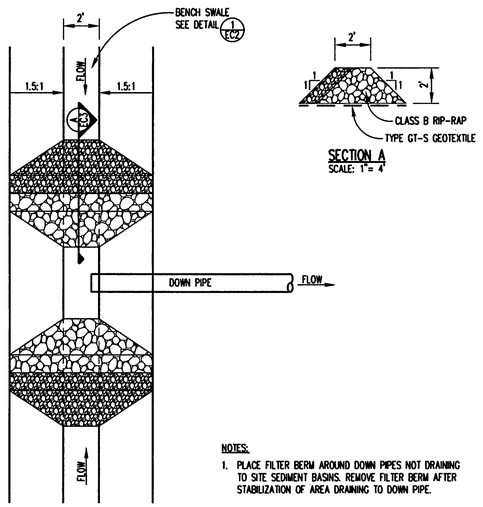

PLAN VIEW

SECTION A
SCALE: 1"= 4'

NOTES:

1. PLACE FILTER BERM AROUND DOWN PIPES NOT DRAINING TO SITE SEDIMENT BASINS. REMOVE FILTER BERM AFTER STABILIZATION OF AREA DRAINING TO DOWN PIPE.

DETAIL 1/EC3
SCALE: 1"= 4'

SEEDING SCHEDULE
HALIFAX COUNTY MUNICIPAL SOLID WASTE LANDFILL

APPLICATION RATES IN POUNDS/ACRE							
*** SEED MIXTURE	PLANTING SEASON	LIME *	SEED	FERTILIZER **	WOOD MULCH	TOPDRESSING *	COMMENTS
P	FEB 1 - MAY 31 SEPT 1 - NOV 30	4000	125	500	1500	500 OF 10-10-10 60 OF NITROGEN	PREFERRED PLANTING SEASONS ARE SEPT 15-OCT 15 AND FEB 15-APRIL 30. ADD 25#/ACRE SUDANGRASS DURING MAY. ADD 25#/ACRE HYBRID RYE DURING NOV.
TW	DEC 1 - JAN 31	N/A	50	400	500	N/A	OVER SEED WITH TYPE P SEED MIXTURE DURING NEXT PLANTING SEASON.
TS	JUNE 1 - AUG 31	N/A	50	400	500	N/A	OVER SEED WITH TYPE P SEED MIXTURE DURING NEXT PLANTING SEASON.

* APPLICATION RATES AND/OR CHEMICAL ANAYSIS SHALL BE CONFIRMED OR ESTABLISHED BY SOIL TEST.

** FERTILIZER SHALL BE 10-20-20 ANALYSIS.

*** SEED MIXTURES TO BE USED ON THE PROJECT SHALL BE AS FOLLOWS.

P - PERMANENT SEEDING
125#/ACRE KENTUCKY 31 TALL FESCUE

TW - TEMPORARY WINTER SEEDING
50#/ACRE HYBRID RYE

TS - TEMPORARY SUMMER SEEDING
50#/ACRE PEARL OR BROWN TOP MILLET

ON CUT AND FILL SLOPES 2H:1V OR STEEPER ADD 30#/ACRE SERIOCEA LESPEDEZA TO TYPE P SEED MIXTURE
USE SCARFIED SEED FOR SPRING PLANTING AND UNSCARIFIED FOR FALL PLANTINGS.

0 4' 8' 12'
1" = 4'-0"

NO.	DATE	REVISION

G.N. RICHARDSON & ASSOCIATES, INC.
Engineering and Geological Services
417 N. BOYLAN AVENUE RALEIGH, N.C. 27603
PHONE-919-828-0577 FAX-919-828-3899

SEAL

SEAL

PROJECT TITLE: HALIFAX COUNTY MUNICIPAL SOLID WASTE LANDFILL FACILITY UPGRADE

DRAWING TITLE: EROSION CONTROL DETAILS

DESIGNED BY: P.K.S.	DRAWN BY: A.W.H.
CHECKED BY: G.N.R.	PROJECT NO.: HALFAX-7
SCALE: AS SHOWN	DATE: OCT, 1996
SHEET NO. 11	DRAWING NO. EC3

D:\-cad\HALFAX-7\AMENDED\s-ec3.DWG DATE: NOV 26, 1996 TIME: 1:13 PM

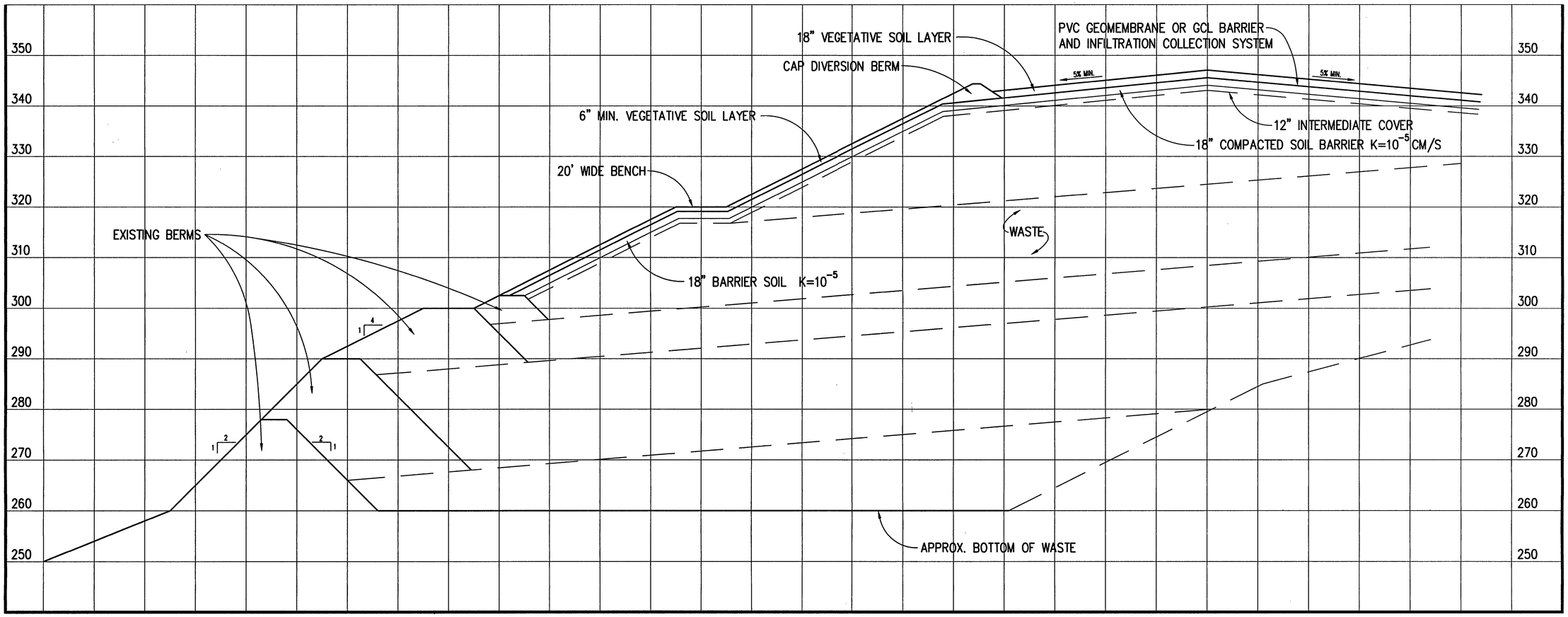

SECTION A-A

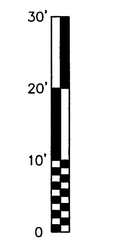

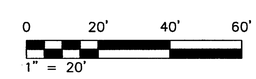

G.N. RICHARDSON & ASSOCIATES, INC.
Engineering and Geological Services
417 N. BOYLAN AVENUE RALEIGH, N.C. 27603
PHONE-919-828-0577 FAX-919-828-3899

SEAL

SEAL

PROJECT TITLE: HALIFAX COUNTY MUNICIPAL SOLID WASTE LANDFILL

DRAWING TITLE: REGULATORY CROSS SECTION

DESIGNED BY: P.K.S.	DRAWN BY: A.W.H.
CHECKED BY: G.N.R.	PROJECT NO.: HALIFAX-7
SCALE: AS SHOWN	DATE: OCT 1996
SHEET NO. 12	DRAWING NO. RG1

D:\-cad\HALIFAX-7\AMENDED\s-RG1.DWG DATE: NOV 26, 1996 TIME: 1:10 PM

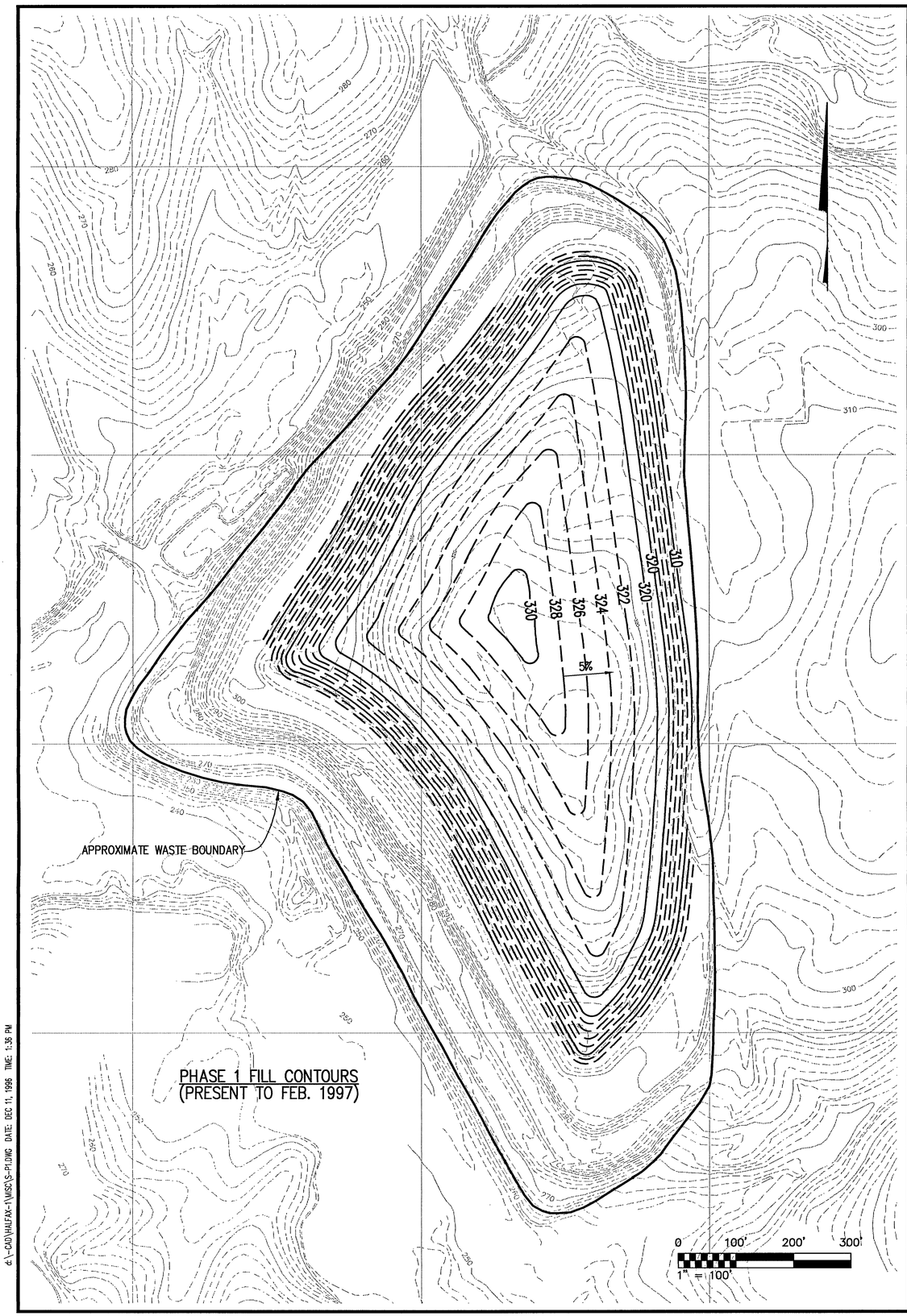

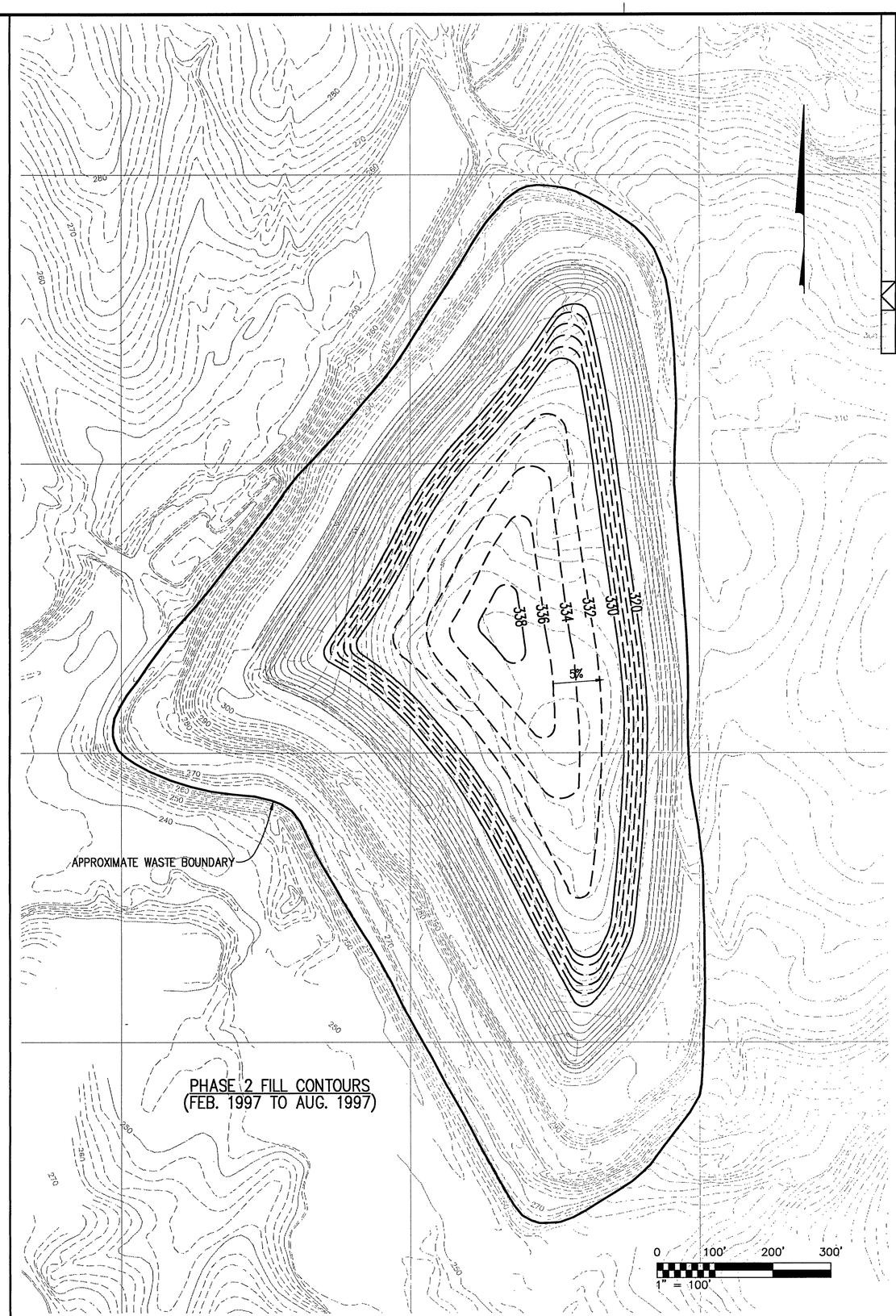

NO.	DATE	REVISION

G.N. RICHARDSON & ASSOCIATES, INC.
Engineering and Geological Services
417 N. BOYLAN AVENUE RALEIGH, N.C. 27603
PHONE-919-828-0577 FAX-919-828-3899

SEAL

SEAL

PROJECT TITLE:
HALIFAX COUNTY MUNICIPAL
SOLID WASTE LANDFILL

DRAWING TITLE:
PHASING PLAN

DESIGNED BY: P.K.S.	DRAWN BY: A.W.H.
CHECKED BY: G.N.R.	PROJECT NO.: HALIFAX-7
SCALE: AS SHOWN	DATE: DEC. 1996
SHEET NO. 13	DRAWING NO. P1

d:\-CAD\HALIFAX-1\MSCS\S-PLDWG DATE: DEC 11, 1996 TIME: 1:36 PM

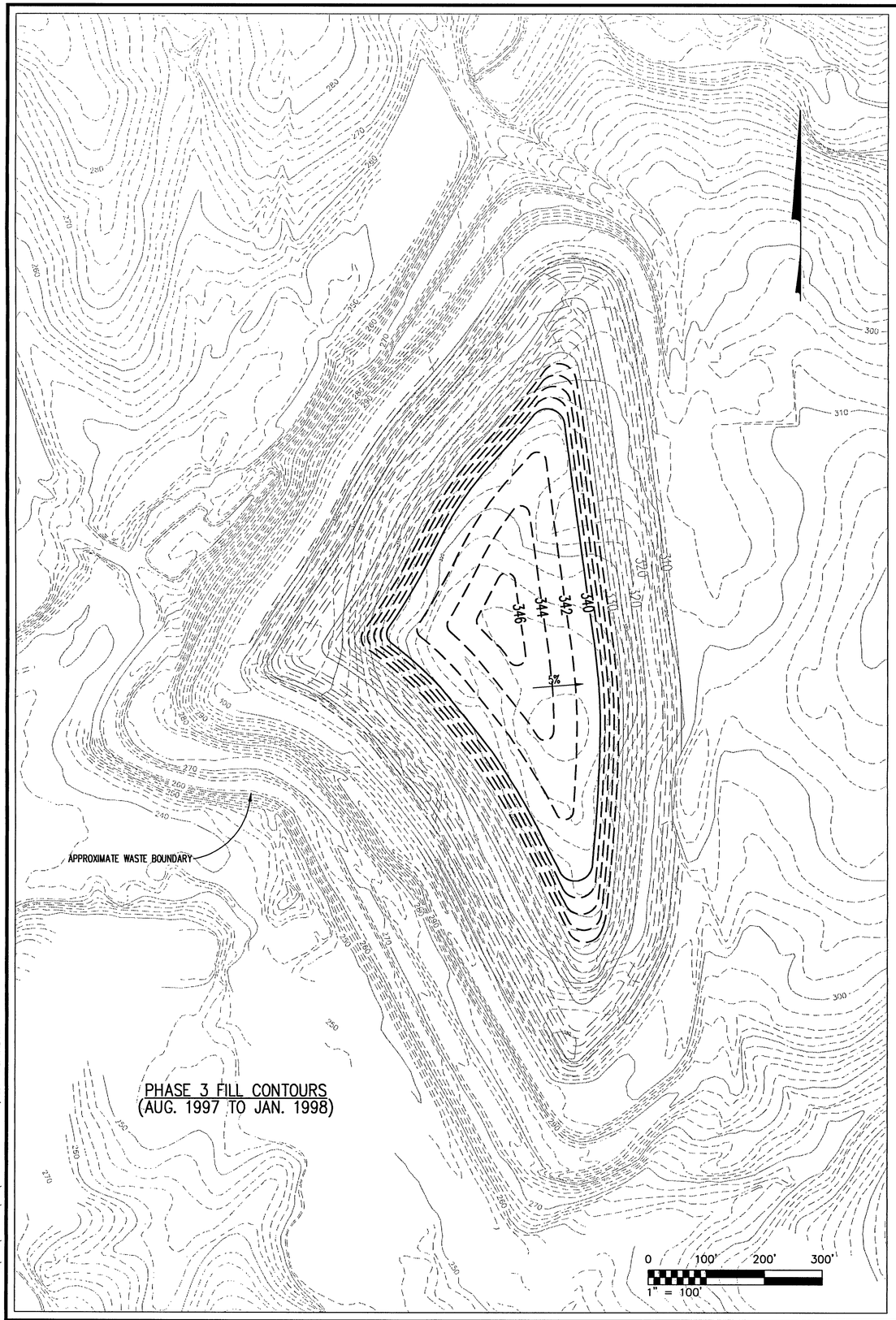

PHASE 3 FILL CONTOURS
(AUG. 1997 TO JAN. 1998)

D:\-CAD\HALIFAX-1\MISC\S-P2.DWG DATE: DEC 11, 1996 TIME: 1:42 PM

DATE	NO.	REVISION

G.N. RICHARDSON & ASSOCIATES, INC.
Engineering and Geological Services
417 N. BOYLAN AVENUE RALEIGH, N.C. 27603
PHONE-919-828-0577 FAX-919-828-3899

SEAL: NORTH CAROLINA PROFESSIONAL ENGINEER SEAL 021666 PIETER K. SCHEER 12/31/96

SEAL: NORTH CAROLINA PROFESSIONAL ENGINEER SEAL 8895 GREGORY N. RICHARDSON 12/31/96

PROJECT TITLE:
HALIFAX COUNTY MUNICIPAL
SOLID WASTE LANDFILL

DRAWING TITLE:
PHASING PLAN

DESIGNED BY: P.K.S.	DRAWN BY: A.W.H.
CHECKED BY: G.N.R.	PROJECT NO.: HALIFAX-7
SCALE: AS SHOWN	DATE: DEC. 1996
SHEET NO. 14	DRAWING NO. P2