SW-11-021-2 4204 19960517 P-0

Permit:	42-04
Name:	Ashe Monofill, Cell 2
County:	Halifax
Shipped Date:	
Box:	SW-11-021
Document Type:	Other (O)
Document Date:	5/17/1996
Division:	Waste Management (WM)
Sub-Division:	Solid Waste (SW)
Document Category:	Facility (F)
Document Group:	Authorization or Permit (P)
Description:	Map: . Maps in Roll:

HALIFAX COUNTY SOLID WASTE DEPARTMENT
HALIFAX COUNTY, NORTH CAROLINA

CELL 2 - ASH MONOFILL
PERMIT APPLICATION DRAWINGS

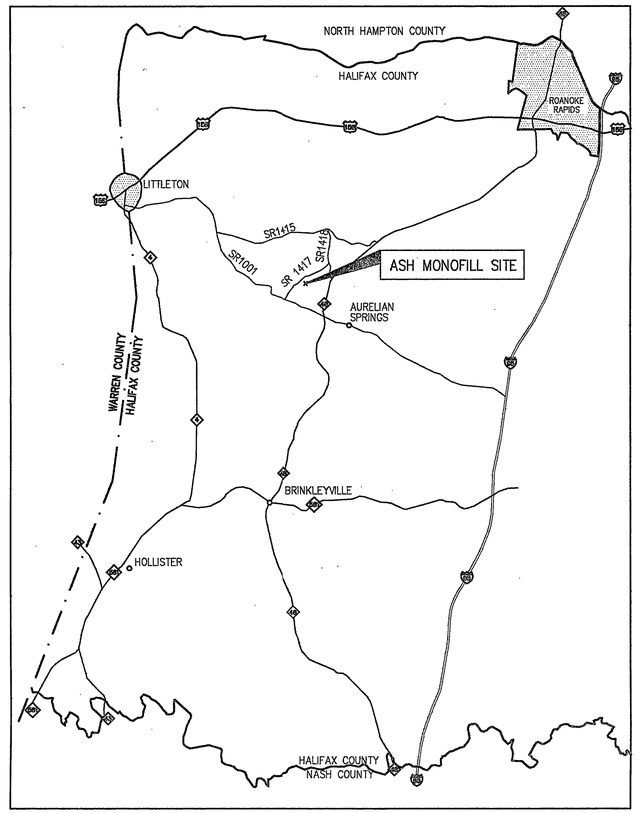

LOCATION MAP

SEPTEMBER 1995

NORTH CAROLINA PROFESSIONAL SEAL 8397 ENGINEER DONALD L. CORDELL

NORTH CAROLINA PROFESSIONAL SEAL ENGINEER JOHN A. BOVE

2/9/96

APPROVED
DIVISION OF SOLID WASTE MANAGEMENT
DATE 5/17/96 BY [illegible]

HAZEN AND SAWYER
Environmental Engineers & Scientists
RALEIGH, NORTH CAROLINA

ABBREVIATIONS

AB	ANCHOR BOLT
AC	ALTERNATING CURRENT/ ASBESTOS CEMENT
ACT	ACOUSTIC TILE
AD	AREA DRAIN
ADJ	ADJUSTABLE
AFF	ABOVE FINISHED FLOOR
AGGR	AGGREGATE
AL	ALUMINUM
ALLOW	ALLOWANCE/ALLOWABLE
ALT	ALTERNATE
APPROX	APPROXIMATE
ARCH	ARCHITECTURAL
ASB	ASBESTOS
ASPH	ASPHALT
AT	ASPHALT TILE
B	BORING
BD	BOARD
BFE	BOTTOM OF FITTING ELEV
BFV	BUTTERFLY VALVE
BITUM	BITUMINOUS
BL	BASELINE
BL	BUILDING LINE
BLDG	BUILDING
BLK	BLOCK
BM	BENCH MARK
BOC	BACK OF CURB
BOT	BOTTOM
BRG	BEARING
BRK	BRICK
BRZ	BRONZE
BSMT	BASEMENT
BT	BOLT
BUR	BUILT-UP ROOFING
BV	BALL VALVE
C	CLOSET/CARPET/CHANNEL
CAB	CABINET
CB	CATCH BASIN
C/C	CENTER TO CENTER
CE	CONSTRUCTION EASEMENT
CEM	CEMENT
CER	CERAMIC
CF	CUBIC FEET
CFM	CUBIC FEET PER MINUTE
CI	CAST IRON/CUBIC INCHES
CIP	CAST IRON PIPE
℄	CENTER LINE
CL_2	CHLORINE
CLG	CEILING
CLKG	CAULKING
CLR	CLEAR
CMP	CORRUGATED METAL PIPE
CMU	CONCRETE MASONRY UNIT
CO	CLEANOUT
COL	COLUMN
CONC	CONCRETE
CONST	CONSTRUCTION
CONT	CONTINUOUS
CONTR	CONTRACTOR
CORP	CORPORATION
CORR	CORRIDOR
CP	CONCRETE PLANK
CRS	COURSE
CT	CERAMIC TILE
CTJ	CONTROL JOINT
CU	COPPER
CV	CHECK VALVE
CW	COLD WATER
CY	CUBIC YARD
DC	DIRECT CURRENT
DET	DETAIL
DF	DRINKING FOUNTAIN
DIA (ø)	DIAMETER
DIAG	DIAGONAL
DIM	DIMENSION
DIP	DUCTILE IRON PIPE
DISCH	DISCHARGE
DIST	DISTRIBUTION
DJ	DOUBLE JOIST
DL	DEAD LOAD
DN	DOWN
DOZ	DOZEN
DR	DOOR
DWG	DRAWING
DWL	DOWEL
E	EAST/EASEMENT
EA	EACH
ECC	ECCENTRIC
EF	EACH FACE
EFF	EFFLUENT
EIP	EXIST IRON PIPE
EL OR ELEV	ELEVATION
ELEC	ELECTRIC/ELECTRICAL
ELL	ELBOW
ENGR	ENGINEER
ENT	ENTRANCE
EOG	EDGE OF GRAVEL
EOP	EDGE OF PAVEMENT
EQ	EQUAL
EQPT	EQUIPMENT
EW	EACH WAY
EX	EXISTING
EXC	EXCAVATE
EXH	EXHAUST
EXP	EXPANSION
EXT	EXTERIOR

FAB	FABRICATE
F & C	FRAME AND COVER
F & G	FRAME AND GRATE
FC	FLUSHING CONNECTION
FD	FLOOR DRAIN
FDN	FOUNDATION
FE	FIRE EXTINGUISHER
FF	FINISH FLOOR
FH	FIRE HYDRANT
FIN	FINISH
FIX	FIXTURE
FL	FLASHING/FLOOR
FLEX	FLEXIBLE
FLG	FLANGE
FLUOR	FLUORESCENT
FLXC	FLEXIBLE CONNECTION
FM	FORCE MAIN
FPRF	FIREPROOF
FRP	FIBERGLASS REINFORCED POLYESTER LAMINATE
FT	FEET
FTG	FOOTING/FITTING
FURR	FURRING/FURRED
G	GAS/GAS LINE
GA	GAUGE
GAL	GALLON
GALV	GALVANIZED
GC	GENERAL CONTRACTOR
GEN	GENERATOR
GI	GALVANIZED IRON
GL	GLASS
GPM	GALLONS PER MINUTE
GR	GRADE
GV	GATE VALVE
GW	GUY WIRE
GWB	GYPSUM WALL BOARD
GWF	GLAZED WALL FINISH
GYP	GYPSUM
H	HEIGHT
HDW	HARDWARE
HEX	HEXAGONAL
HM	HOLLOW METAL
HORZ	HORIZONTAL
HP	HORSEPOWER
HPT	HIGH POINT
HTR	HEATER
HVAC	HEATING, VENTILATION AND AIR CONDITIONING
HW	HOT WATER
HWL	HIGH WATER LEVEL
HWY	HIGHWAY
HYD	HYDRAULIC
I	IRON
ID	INSIDE DIAMETER
IF	INSIDE FACE
IN	INCH
INCL	INCLUDED
INF	INFLUENT
INS	INSULATION
INT	INTERIOR
INV	INVERT
J	JOIST
JB	JUNCTION BOX
JCT	JUNCTION
JT	JOINT
L	LENGTH/ANGLE
LA	LINE AHEAD
LAB	LABORATORY
LAM	LAMINATED
LAT	LATERAL
LAV	LAVATORY
LB	POUND/LINE BACK
LF	LINEAR FEET
LG	LONG
LL	LIVE LOAD
LLH	LONG LEG HORIZONTAL
LLV	LONG LEG VERTICAL
LP	LIGHT POLE
LPT	LOW POINT
LT	LIGHT
LTG	LIGHTING
LVR	LOUVER
LWL	LOW WATER LEVEL

MAINT	MAINTENANCE
MATL	MATERIAL
MAX	MAXIMUM
MECH	MECHANICAL
MEMB	MEMBRANE
MET	METAL
MFR	MANUFACTURER
MG	MILLION GALLONS
MGD	MILLION GALLONS PER DAY
MH	MANHOLE
MIN	MINIMUM
MISC	MISCELLANEOUS
MJ	MECHANICAL JOINT
MLDG	MOLDING
MO	MASONRY OPENING
MOD	MODIFY/MODIFIED
MON	MONUMENT
MOT	MOTOR
MTD	MOUNTED
MTG	MOUNTING
MULT	MULTIPLE
N	NORTH
NA	NOT APPLICABLE
NF	NEAR FACE
NIC	NOT IN CONTRACT
NO	NUMBER
NOM	NOMINAL
NPW	NON POTABLE WATER
NTS	NOT TO SCALE
OC	ON CENTER
OD	OUTSIDE DIAMETER
OF	OUTSIDE FACE
OFF	OFFICE
OPER	OPERATOR
OPNG	OPENING
OPP	OPPOSITE
ORIG	ORIGINAL
OT	OPEN TRUSS
OVHD	OVERHEAD
PAR	PARALLEL
PC	POINT OF CURVE/PIECE
PCC	POINT OF COMPOUND CURVE
PCF	POUNDS PER CUBIC FOOT
PE LINING	POLYETHYLENE LINING
PERF	PERFORATED
PERP	PERPENDICULAR
PI	POINT OF INTERSECTION
℘	PROPERTY LINE/PLATE
PNL	PANEL
PP	POWER POLE
PREFAB	PREFABRICATED
PRV	PRESSURE RELIEF VALVE
PS	PUMPING STATION
PSF	POUNDS PER SQUARE FOOT
PSI	POUNDS PER SQUARE INCH
PT	POINT OF TANGENT/POINT
PTN	PARTITION
PV	PLUG VALVE
PVC	POLYVINYL CHLORIDE
PVMT	PAVEMENT
PW	POTABLE WATER
QTY	QUANTITY
R	RADIUS/RISER
RCP	REINFORCED CONCRETE PIPE
RD	ROAD/ROOF DRAIN
RECIR	RECIRCULATION
RECP	RECEPTACLE
RECT	RECTANGULAR
RED	REDUCER
REF	REFERENCE
REG	REGISTER
REINF	REINFORCING
REM	REMOVE
REQD	REQUIRED
REST	RESTRAINED
REV	REVISE
RF	ROOF
RFG	ROOFING
RJ	RESTRAINED JOINT
RM	ROOM
RND	ROUND
RO	ROUGH OPENING
RPM	REVOLUTIONS PER MINUTE
RR	RAILROAD
RT	RIGHT
RTU	REMOTE TERMINAL UNIT
RW	RAW WATER
R/W	RIGHT OF WAY

S	SOUTH/SLOPE
SAN	SANITARY
SBL	SURVEY BASELINE
SCH	SCHEDULE
SD	STORM/SITE DRAIN
SECT	SECTION
SERV	SERVICE
SEW	SEWER
SF	SQUARE FEET
SHT	SHEET
SI	SQUARE INCH
SIM	SIMILAR
SJ	STEEL JOIST
SPEC	SPECIFICATION
SQ	SQUARE
SS	SANITARY SEWER
SST	STAINLESS STEEL
ST	STREET
STA	STATION
STD	STANDARD
STG	STORAGE
STIR	STIRRUP
STL	STEEL
STR	STRUCTURAL
SUB	SUBSTITUTE
SUP	SUPPLY
SUPT	SUPERINTENDENT
SUR	SURFACE
SUSP	SUSPENDED
SW	SWITCH
SWBD	SWITCHBOARD
SWD	SIDE WATER DEPTH
SYM	SYMMETRICAL
T	TREAD
T&B	TOP AND BOTTOM
T&G	TONGUE AND GROOVE
TAN	TANGENT
TBM	TEMPORARY BENCH MARK
TC	TOP OF CURB
TDH	TOTAL DYNAMIC HEAD
TECH	TECHNICAL
TEL	TELEPHONE
TEMP	TEMPERATURE
TER	TERRAZZO
THERMO	THERMOSTAT
THK	THICK
THRU	THROUGH
TOD	TOP OF DECK
TOF	TOP OF FOOTING
TOM	TOP OF MASONRY/MANHOLE
TOS	TOP OF SLAB
TOW	TOP OF WALL
TOL	TOLERANCE
TPS	TWISTED PAIR SHIELDED
TRANS	TRANSFORMER
TYP	TYPICAL
UG	UNDERGROUND
UH	UNIT HEATER
UNFIN	UNFINISHED
UR	URINAL
UTIL	UTILITY
VAC	VACUUM
VAT	VINYL ASBESTOS TILE
VCP	VITRIFIED CLAY PIPE
VEL	VELOCITY
VENT	VENTILATING/VENTILATION
VERT	VERTICAL
VOL	VOLUME
VP	VENT PIPE
VWC	VINYL WALL COVERING
W	WEST/WIDTH
W/	WITH
WC	WATER CLOSET
WF	WIDE FLANGE
WH	WALL HYDRANT
WI	WROUGHT IRON
WL	WATER LEVEL
W/L	WATER LINE
WO	WINDOW OPENING
W/O	WITHOUT
WP	WATERPROOF
WPFG	WATER PROOFING
WPT	WALL PENETRATING TYPE
WSE	WATER SURFACE ELEVATION
WSP	WEATHERSTRIP
WT	WEIGHT
WV	WATER VALVE
WWF	WELDED WIRE FABRIC
YD	YARD
YR	YEAR

INDEX OF DRAWINGS

SHEET NO.	DRAWING NO.	DESCRIPTION
		COVER
1	X1	INDEX OF DRAWINGS, SYMBOLS AND ABBREVIATIONS
2	G1	FACILITY PLAN
3	G2	EXISTING SITE CONDITIONS
4	G3	CELL 2 – GEOMEMBRANE GRADING PLAN
5	G4	BERM DETAILS
6	G5	MISCELLANEOUS DETAILS
7	G6	MISCELLANEOUS INTERNAL STORMWATER MANAGEMENT SYSTEM DETAILS
8	G7	MISCELLANEOUS DETAILS
9	G8	INTERNAL STORMWATER MANAGEMENT SYSTEM HEADER PIPE PROFILE
10	G9	CELL 2 – EROSION AND SEDIMENTATION CONTROL PLAN
11	G10	EROSION AND SEDIMENTATION CONTROL SECTIONS AND DETAILS

LEGEND

MATERIALS

GRADE OR EARTH
ROCK
ASPHALT PAVING
STEEL
SAND
INSULATION
GRAVEL
WATER SURFACE
CONCRETE
GRATING
CONC. FILL OR GROUT
CHECKERED PLATE
CONC. MASONRY UNIT
GLASS
BRICK
WOOD BLOCKING

SYMBOLS

PROPOSED PIPE
— W — EXIST. WATER LINE
— F/O — EXIST. FIBER OPTIC CABLE
— SS — EXIST. SANITARY SEWER
— SD — EXIST. STORM DRAIN
— E — EXIST. ELECTRICAL
— T — EXIST. TELEPHONE
— G — EXIST. GAS
EXIST. VALVE
NEW VALVE
SILT FENCE
NEW AIR/VACUUM VALVE ASSEMBLY
FH EXIST. FIRE HYDRANT
MH EXIST. SAN. SEWER MH
WM EXIST. WATER METER
PP EXIST POWER POLE
CO EXIST. SS CLEANOUT
AP SOIL BORING/AUGER PROBE
SR SEISMIC LINE
EXIST GROUND PROFILE
CREEK / DITCH
EXIST EDGE OF PAV'MT

SECTION AND DETAIL KEYING

DRAWINGS ARE CROSS REFERENCED IN THE FOLLOWING METHOD:

(A) A SECTION CUT ON DRAWING A3 IS IDENTIFIED AS FOLLOWS:

A / A6 — SECTION LETTER — DRAWING WHERE SECTION IS SHOWN

(B) THE SECTION SHOWN ON DRAWING A6 IS IDENTIFIED AS FOLLOWS:

A / A3 — SECTION LETTER — DRAWING FROM WHERE SECTION WAS TAKEN

DETAILS ARE CROSS REFERENCED IN A SIMILAR MANNER, EXCEPT DETAILS ARE IDENTIFIED BY A SQUARE WITH A NUMBER IN THE UPPER HALF.

STANDARD DETAILS ARE REFERENCED BY A UNIQUE SEVEN DIGIT NUMBER AND ARE SHOWN ON THE CONTRACT DRAWINGS BY ONE OF THE TWO METHODS:

XXXXXXX → REFERENCED ITEM

OR

SEE DETAIL XXXXXXX

THE STANDARD DETAILS ARE COMPILED IN THE REAR OF THE CONTRACT DRAWINGS.

LINETYPES

PROPOSED ITEMS
EXISTING ITEMS
HIDDEN ITEMS
DEMOLITION ITEMS
CENTER LINE
MATCH LINE

NO.	ISSUED FOR	DATE	BY
2	REGULATORY COMMENTS	2/96	DLC
1	REGULATORY APPROVAL	9/95	DLC

DESIGNED BEK
DRAWN PWS
CHECKED JAB
PROJ.ENGR. JAB
APPROVED

NORTH CAROLINA PROFESSIONAL SEAL 8397 ENGINEER DONALD L. CORDELL

NORTH CAROLINA PROFESSIONAL SEAL ENGINEER JOHN A. BOVE 2/9/96

HAZEN AND SAWYER
Environmental Engineers & Scientists
RALEIGH, NC CHARLOTTE, NC RICHMOND, VA VIENNA, VA

HALIFAX COUNTY, NORTH CAROLINA
SOLID WASTE DEPARTMENT

ASH MONOFILL - CELL 2
PERMIT APPLICATION DRAWINGS

INDEX OF DRAWINGS, SYMBOLS AND ABBREVIATIONS

THE SCALE BAR SHOWN BELOW MEASURES ONE INCH LONG ON THE ORIGINAL DRAWING.

DATE SEPT 1995
H & S JOB NUMBER 3786
CONTRACT NUMBER 1
DRAWING NUMBER X1
SHEET 1 OF 11

PLOT DATE 02/08/96 1:43 PM PLOT SCALE = 1:1 CAD FILE = H:\3786\GEN\X001 by PHILS XREF FILE = NONE

PLAN

1"=200'-0"

NOTES:

1. ELEVATION CONTOURS SHOWN FOR CELL 1 ARE TOP OF OPERATION COVER. CELL 1 IS CURRENTLY IN OPERATION, THEREFORE, ELEVATIONS SHOWN MAY NOT REPRESENT ACTUAL CONDITIONS.
2. GROUND SURFACE ELEVATIONS IN CELL 2 AREA ARE BASED UPON 1991 AERIAL TOPOGRAPHIC SURVEY CONDUCTED BY PEIDMONT AERIAL SURVEYS AND MAY NOT REFLECT EXISITNG LINES AND GRADES. FOR EXISITNG CONDITIONS SEE DRAWING G2.

LEGEND

MW-4	DENOTES EXISTING PERMANENT MONITORING WELL LOCATION AND IDENTIFYING NUMBER
B-1	DENOTES ABANDONED BORING OR PIEZOMETER INSTALLED DURING SITE SUITABILTY STUDY, 2/91.
B-14	DENOTES EXISITNG TEMPORARY PIEZOMETER AND IDENTIFYING NUMBER
BM-1	DENOTES PERMANENT SURVEYING BENCHMARK
MW-14	DENOTES EXISTING TEMPORARY DOWNSTREAM MONITORING WELL AND IDENTIFYING NUMBER

MAY 1996 Received Solid Waste Section

NO.	ISSUED FOR	DATE	BY
1	REGULATORY APPROVAL	9/95	DLC

DESIGNED BEK
DRAWN PWS
CHECKED JAB
PROJ.ENGR. JAB
APPROVED

NORTH CAROLINA PROFESSIONAL SEAL 8397 ENGINEER DONALD L. CORDELL

NORTH CAROLINA PROFESSIONAL SEAL 19391 ENGINEER JOHN A. BOVE 5/10/96

HAZEN AND SAWYER
Environmental Engineers & Scientists
RALEIGH, NC CHARLOTTE, NC RICHMOND, VA

HALIFAX COUNTY, NORTH CAROLINA
SOLID WASTE DEPARTMENT

ASH MONOFILL - CELL 2
CONSTRUCTION DRAWINGS

FACILITY PLAN

THE SCALE BAR SHOWN BELOW MEASURES ONE INCH LONG ON THE ORIGINAL DRAWING.

DATE MAY 1996
H & S JOB NUMBER 3786
CONTRACT NUMBER 1
DRAWING NUMBER G1
SHEET 2 OF 11

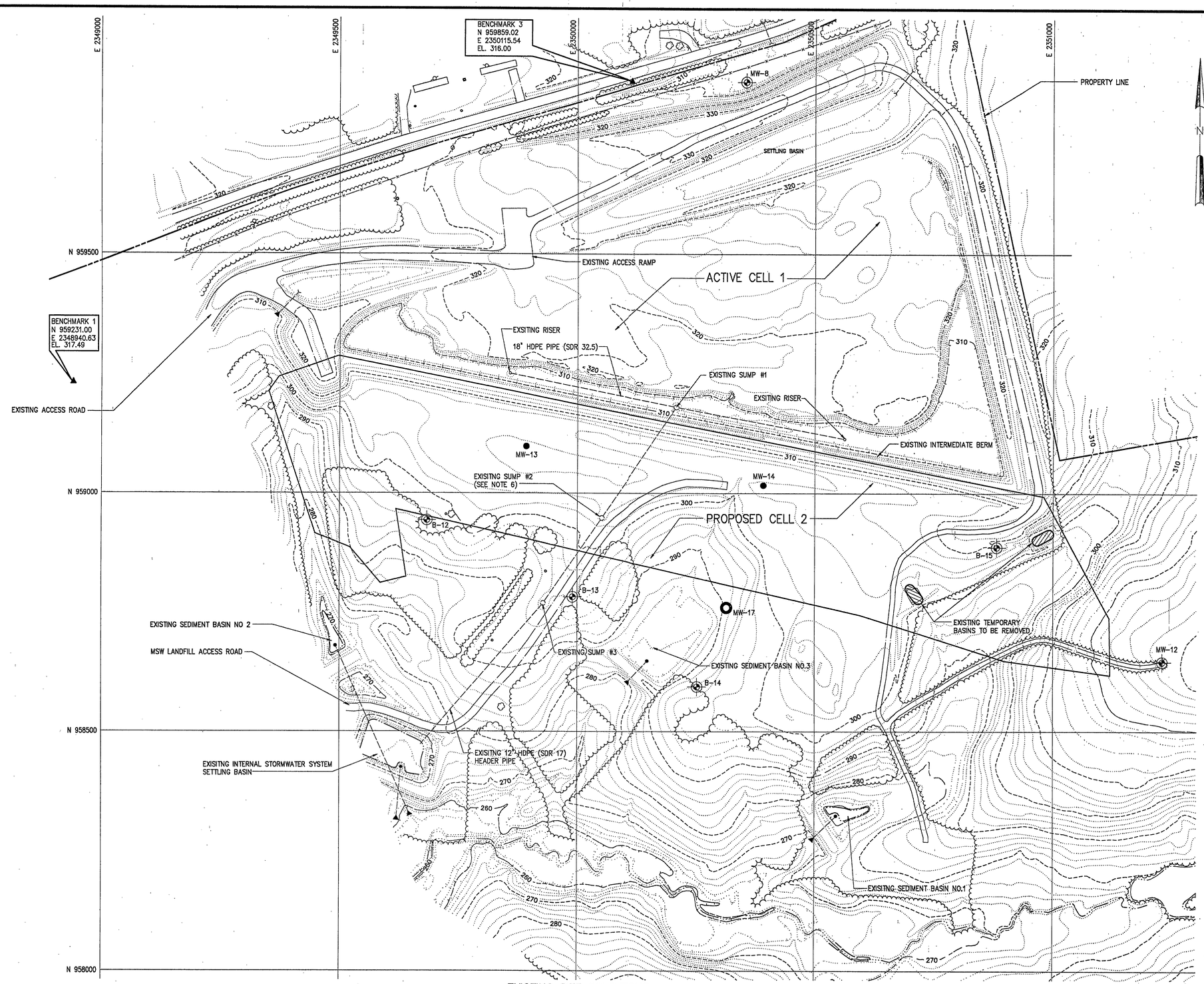

EXISTING SITE CONDITIONS

1"=100'-0"

NOTES:

1. EXISTING TOPOGRAPHY COMPILED BY PIEDMONT AERIAL SURVEYS, GREENSBORO, NC FROM PHOTOGRAPHY DATED 2/26/96.
2. CELL 1 IS CURRENT ACTIVE CELL, THEREFORE, CONTOURS SHOWN FOR CELL 1 DO NOT REFLECT CURRENT CONDITIONS.
3. CONTRACTOR TO ABANDON THE FOLLOWING PIEZOMETER AND WELLS ACCORDING TO NORTH CAROLINA REGULATIONS AND PROJECT SPECIFICATIONS:
   MW-13
   MW-14
   B-15
   B-12
   B-13
4. CONTRACTOR TO REMOVE TEMPORARY BASINS IN CELL 2 AREA.
5. FOR EXISTING AND PROPOSED EROSION CONTROL STRUCTURES, SEE DRAWINGS G9.
6. FOR EXISTING TEMPORARY SUMP PROTECTION, SEE DETAIL 4/G5.

MONITORING WELL DATA			
WELL NO	NORTHING	EASTING	GROUND SURFACE ELEVATION
B-12	958942.24	2349684.05	296.7
B-13	958782.14	2349990.36	297.4
B-14	958593.56	2350253.23	293.6
B-15	958886.36	2350881.95	308.9

LEGEND

- MW-4 — DENOTES PERMANENT MONITORING WELL LOCATION AND IDENTIFYING NUMBER
- B-14 — DENOTES EXISTING TEMPORARY PIEZOMETER AND IDENTIFYING NUMBER
- MW-14 — DENOTES EXISITNG TEMPORARY DOWNSTREAM MONITORING WELL AND IDENTIFYING NUMBER
- ▲ — DENOTES SURVEYING BENCHMARK
- ---330--- — EXISTING INDEX ELEVATION CONTOUR
- ..... — EXISTING INTERMEDIATE ELEVATION CONTOUR
- MW-17 — DENOTES PROPOSED TEMPORARY DOWNSTREAM MONITORING WELL AND IDENTIFYING NUMBER

MAY 1996 Received

NO.	ISSUED FOR	DATE	BY
2	REVISED TOPOGRAPHY	5/96	DLC
1	REGULATORY APPROVAL	9/95	DLC

DESIGNED BEK
DRAWN PWS
CHECKED JAB
PROJ.ENGR. JAB
APPROVED

NORTH CAROLINA PROFESSIONAL SEAL 8397 ENGINEER DONALD L. CORDELL

NORTH CAROLINA PROFESSIONAL SEAL 19991 ENGINEER JOHN A. BOVE 5/10/96

HAZEN AND SAWYER
Environmental Engineers & Scientists
RALEIGH, NC CHARLOTTE, NC RICHMOND, VA

HALIFAX COUNTY, NORTH CAROLINA
SOLID WASTE DEPARTMENT

ASH MONOFILL - CELL 2
CONSTRUCTION DRAWINGS

EXISTING SITE CONDITIONS

THE SCALE BAR SHOWN BELOW MEASURES ONE INCH LONG ON THE ORIGINAL DRAWING.

DATE MAY 1996
H & S JOB NUMBER 3786
CONTRACT NUMBER 1
DRAWING NUMBER G2
SHEET 3 OF 11

NOTES:

1. EXISTING TOPOGRAPHY COMPILED BY PIEDMONT AERIAL SURVEYS, GREENSBORO, NC FROM PHOTOGRAPHY DATED 2/26/96.
2. CELL 1 IS CURRENT ACTIVE CELL, THEREFORE, CONTOURS SHOWN FOR CELL 1 DO NOT REFLECT CURRENT CONDITIONS.
3. CONTRACTOR TO REMOVE HDPE RISERS AT COMPLETION OF CELL 2 GEOMEMBRANE INSTALLATION.
4. CONTRACTOR TO REMOVE 18" DIA HDPE PIPE AND REPLACE IT WITH 6" DIA PERFORATED PIPE AND GRAVEL. SEE DETAIL 3/G6.

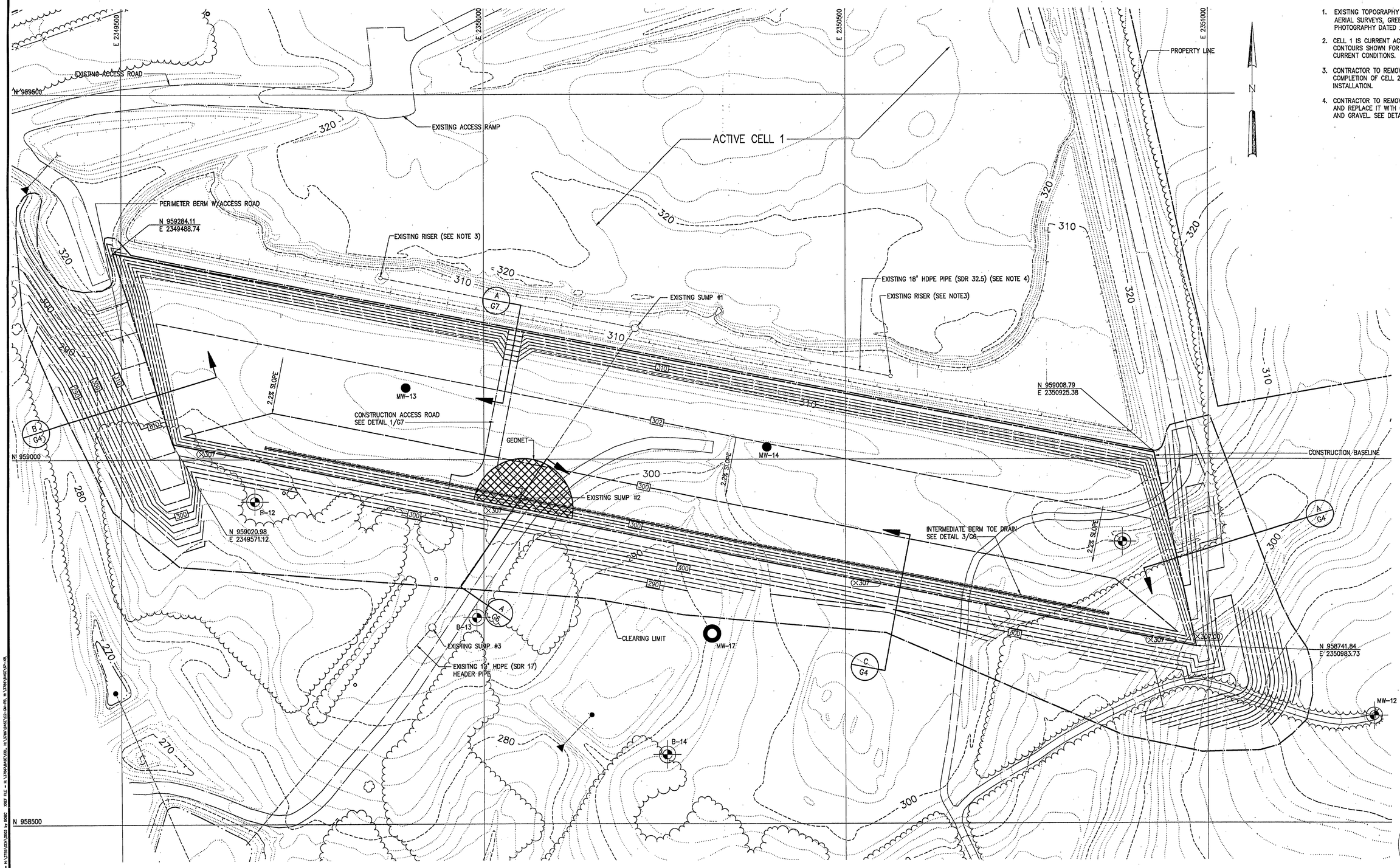

CELL 2 – GEOMEMBRANE GRADING PLAN

1"=60'-0"

NO.	ISSUED FOR	DATE	BY
2	REVISED TOPOGRAPHY	5/96	DLC
1	REGULATORY APPROVAL	9/95	DLC

DESIGNED BEK
DRAWN PWS
CHECKED JAB
PROJ.ENGR. JAB
APPROVED

NORTH CAROLINA PROFESSIONAL SEAL 8397 ENGINEER DONALD L. CORDELL

NORTH CAROLINA PROFESSIONAL SEAL 8397 ENGINEER JOHN A. BOVE 5/10/96

HAZEN AND SAWYER
Environmental Engineers & Scientists
RALEIGH, NC CHARLOTTE, NC RICHMOND, VA

HALIFAX COUNTY, NORTH CAROLINA
SOLID WASTE DEPARTMENT

ASH MONOFILL - CELL 2
CONSTRUCTION DRAWINGS

CELL 2 – GEOMEMBRANE
GRADING PLAN

THE SCALE BAR SHOWN BELOW MEASURES ONE INCH LONG ON THE ORIGINAL DRAWING.

DATE MAY 1996
H & S JOB NUMBER 3786
CONTRACT NUMBER 1
DRAWING NUMBER G3
SHEET 4 OF 11

MAY 1996 Received Solid Waste Section

NOTES:

1. COMPACTED COAL ASH MAY BE USED AS COMPACTED EMBANKMENT IN THE ACCESS ROAD PERIMETER BERM AT THE CONTRACTORS OPTION. THE COAL ASH MUST BE ENCAPSULATED WITH AT LEAST TWO FEET OF COMPACTED EMBANKMENT SOIL ON ALL SIDES AND MUST HAVE AT LEAST THREE FEET OF COMPACTED EMBANKMENT SOIL BETWEEN THE COAL ASH AND THE MONOFILL GEOMEMBRANE.

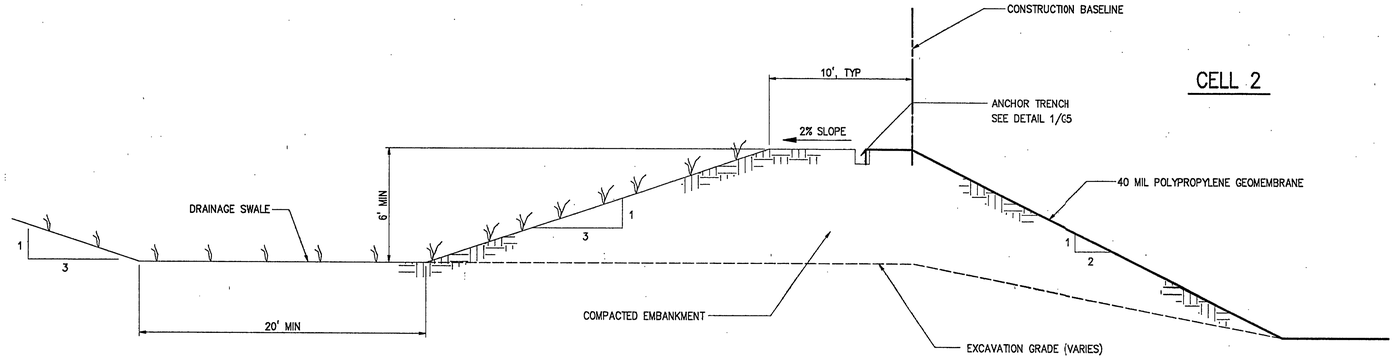

PERIMETER BERM CROSS-SECTION (TYP)

SECTION A/G3
1"=5'-0"

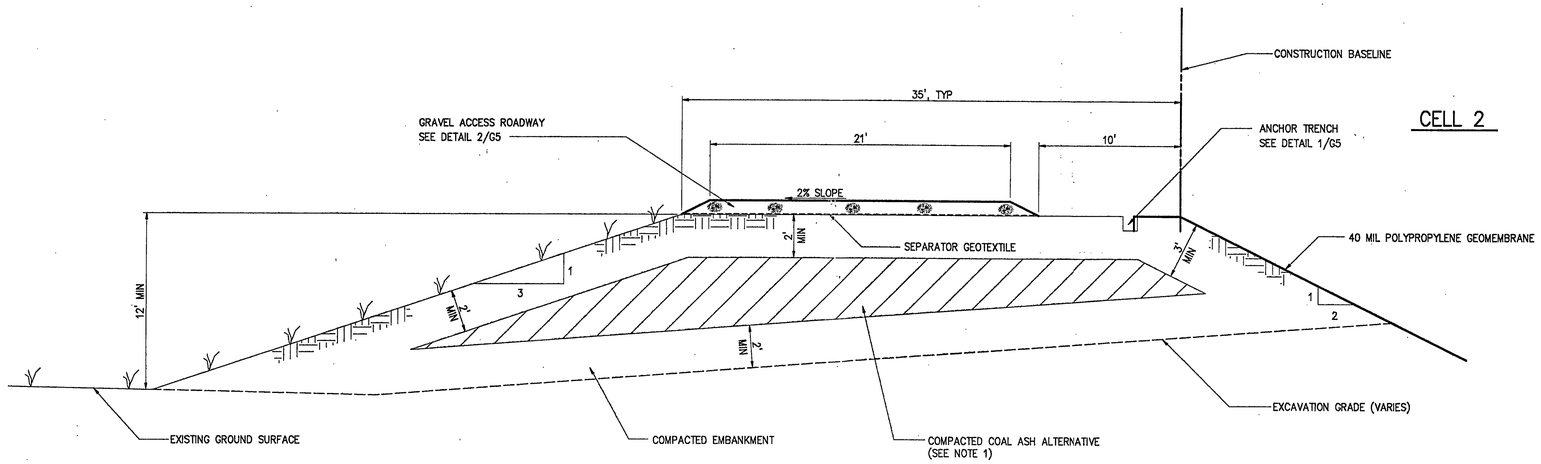

ACCESS ROAD PERIMETER BERM CROSS-SECTION (TYP)

SECTION B/G3
1"=5'-0"

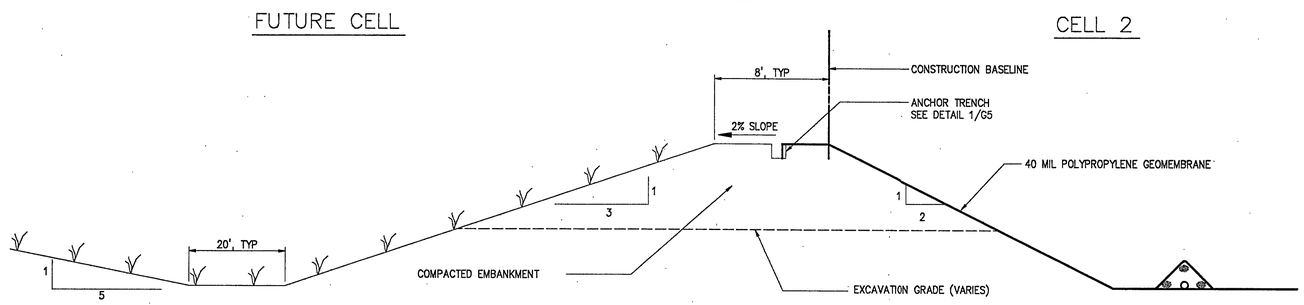

SOUTH INTERMEDIATE BERM CROSS-SECTION (TYP)

SECTION C/G3
1"=5'-0"

NO.	ISSUED FOR	DATE	BY
2	REVISED TOPOGRAPHY	5/96	DLC
1	REGULATORY APPROVAL	9/95	DLC

DESIGNED BEK
DRAWN PWS
CHECKED JAB
PROJ.ENGR. JAB
APPROVED

NORTH CAROLINA PROFESSIONAL SEAL 8397 ENGINEER DONALD L. CORDELL

NORTH CAROLINA PROFESSIONAL SEAL 19291 ENGINEER JOHN A. BOVE 5/10/96

HAZEN AND SAWYER
Environmental Engineers & Scientists
RALEIGH, NC CHARLOTTE, NC RICHMOND, VA

HALIFAX COUNTY, NORTH CAROLINA
SOLID WASTE DEPARTMENT

ASH MONOFILL - CELL 2
PERMIT APPLICATION DRAWINGS

BERM DETAILS

THE SCALE BAR SHOWN BELOW MEASURES ONE INCH LONG ON THE ORIGINAL DRAWING.

DATE SEPT 1995
H & S JOB NUMBER 3786
CONTRACT NUMBER 1
DRAWING NUMBER G4
SHEET 5 OF 11

4 MAY 1996 Received Solid Waste Section

PLOT DATE 05/09/96 2:08 PM PLOT SCALE = 1:1 CAD FILE = H:\3786\DETAIL\G4 by BOBC DBSF FILE = H:\3786\DETAIL\GP-G-D2, H:\3786\DETAIL\GP-G-D1, H:\3786\DETAIL\GP-G-D0.

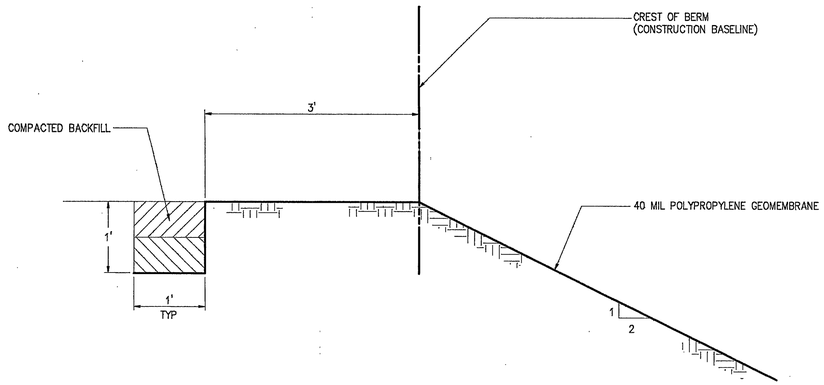

GEOMEMBRANE ANCHOR TRENCH
(FOR ALL BERMS)

DETAIL	1
1" = 1'	G4

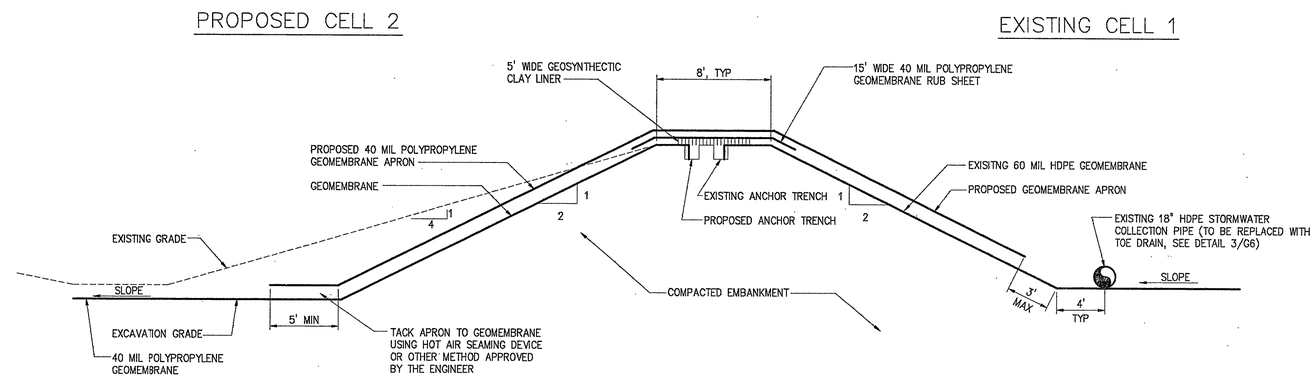

NORTH INTERMEDIATE BERM CROSS-SECTION (TYP)

SECTION A/G3
1"=5'-0"

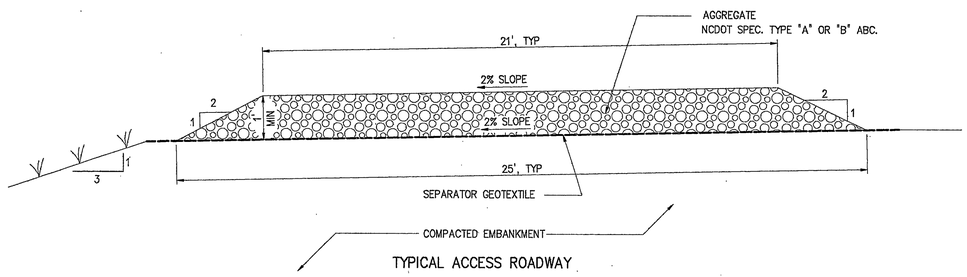

TYPICAL ACCESS ROADWAY

DETAIL	2
NTS	G4

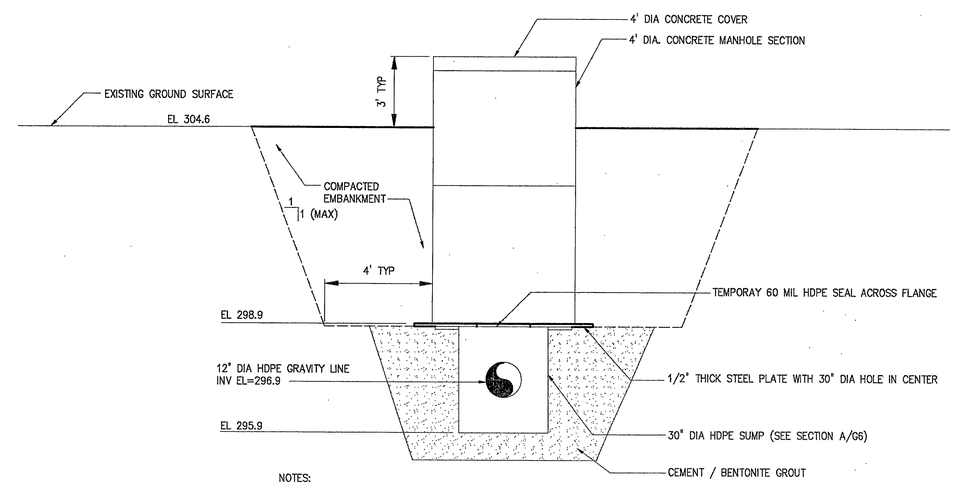

NOTES:

1. CONTRACTOR SHALL BE RESPONSIBLE FOR REPAIR OF ANY DAMAGE TO EXISTING SUMP AND GRAVITY LINE.
2. PROTECT SUMP AREA FRON RUN-ON AND EROSION DURING CONSTRUCTION.
3. CONTRACTOR TO REMOVE STEEL PROTECTION AND HDPE SEAL IMMEDIATELY BEFORE GEOMEMBRANE INSTALLATION.
4. CONTRACTOR TO REPAIR SURFACE OF BENTONITE GROUT AS REQUIRED TO RESTORE SMOOTH SUBGRADE SUITABLE FOR GEOMEMBRANE INSTALLATION AS APPROVED BY THE ENGINEER.
5. INSTALL GEOSYNTHETIC CLAY LINER (GCL) A DISTANCE OF 10' AROUND SUMP IMMEDIATELY BEFORE GEOMEMBRANE INSTALLATION.

EXISTING TEMPORARY SUMP PROTECTION
FOR SUMP 2

DETAIL	4
NTS	G2

NO.	ISSUED FOR	DATE	BY
2	REGULATORY COMMENTS	2/96	DLC
1	REGULATORY APPROVAL	9/95	DLC

DESIGNED BEK
DRAWN PWS
CHECKED JAB
PROJ.ENGR. JAB
APPROVED

NORTH CAROLINA PROFESSIONAL SEAL 8397 ENGINEER DONALD L. CORDELL

NORTH CAROLINA PROFESSIONAL SEAL 8397 ENGINEER JOHN A. BOVE 2/9/96

HAZEN AND SAWYER
Environmental Engineers & Scientists
RALEIGH, NC CHARLOTTE, NC RICHMOND, VA

HALIFAX COUNTY, NORTH CAROLINA
SOLID WASTE DEPARTMENT

ASH MONOFILL - CELL 2
PERMIT APPLICATION DRAWINGS

MISCELLANEOUS DETAILS

THE SCALE BAR SHOWN BELOW MEASURES ONE INCH LONG ON THE ORIGINAL DRAWING.

DATE SEPT 1995
H & S JOB NUMBER 3786
CONTRACT NUMBER 1
DRAWING NUMBER G5
SHEET 6 OF 11

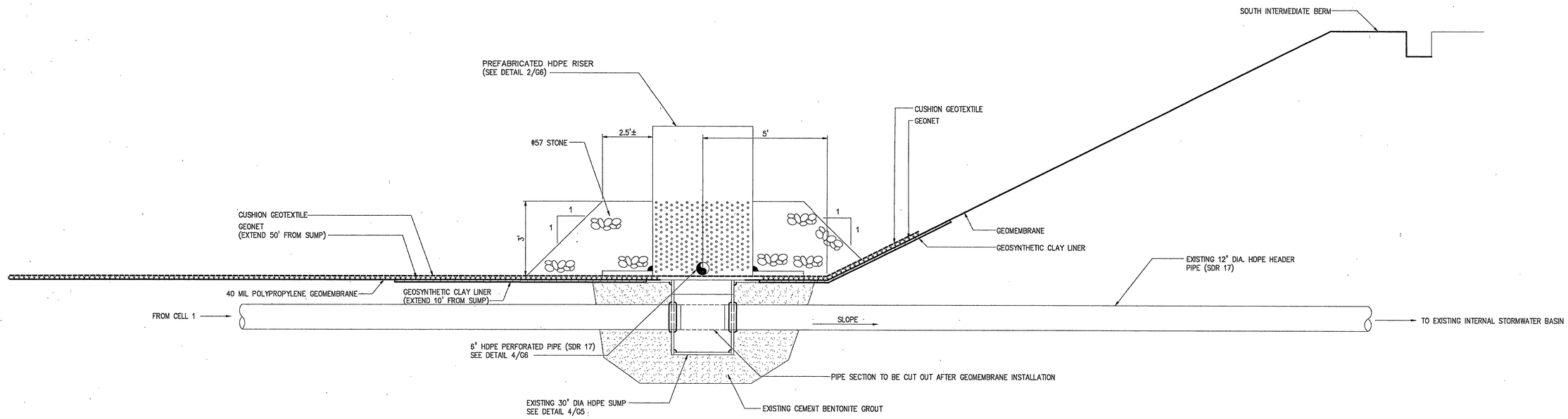

INTERNAL STORMWATER MANAGEMENT SYSTEM
SUMP/RISER ORIENTATION SCHEMATIC

SECTION A/G3
1"=2'-0"

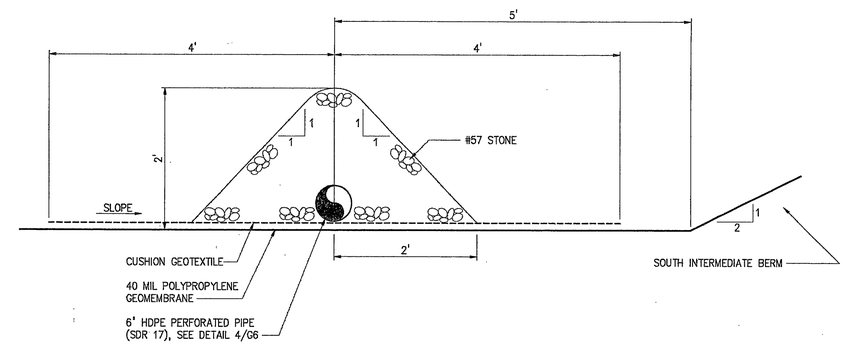

INTERMEDIATE BERM TOE DRAIN
TYPICAL SECTION

DETAIL 3/G3
1"=1'-0"

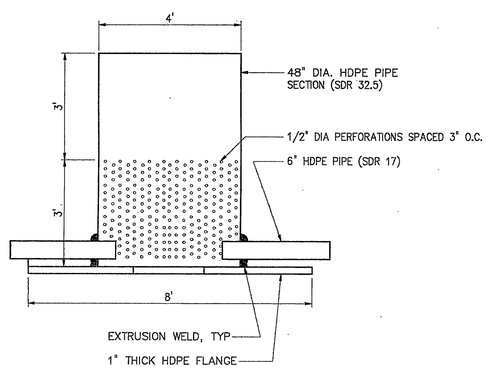

SECTION B/G6
1"=2'-0"

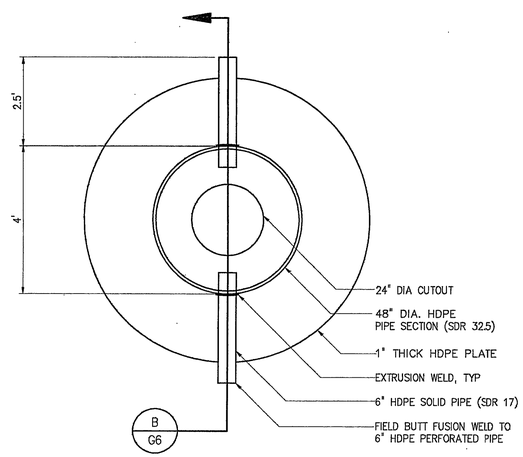

TOP VIEW

PREFABRICATED HDPE RISER

DETAIL 2/G6
1"=2'-0"

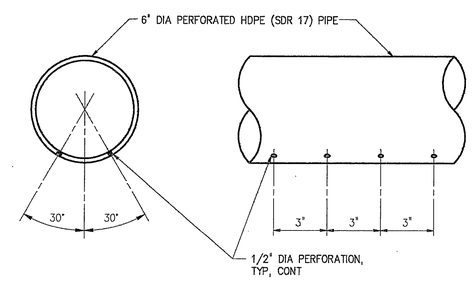

INTERNAL STORMWATER COLLECTION
PIPE PERFORATION

DETAIL 4/G6
NTS

NO.	ISSUED FOR	DATE	BY
2	REGULATORY COMMENTS	2/96	DLC
1	REGULATORY APPROVAL	9/95	DLC

DESIGNED BEK
DRAWN PWS
CHECKED JAB
PROJ.ENGR. JAB
APPROVED

NORTH CAROLINA PROFESSIONAL SEAL 8397 ENGINEER DONALD L. CORDELL

NORTH CAROLINA PROFESSIONAL SEAL 19[illegible] ENGINEER JOHN A. BOYE 2/9/96

HAZEN AND SAWYER
Environmental Engineers & Scientists
RALEIGH, NC CHARLOTTE, NC RICHMOND, VA

HALIFAX COUNTY, NORTH CAROLINA
SOLID WASTE DEPARTMENT

ASH MONOFILL - CELL 2
PERMIT APPLICATION DRAWINGS

MISCELLANEOUS INTERNAL STORMWATER
MANAGEMENT SYSTEM DETAILS

THE SCALE BAR SHOWN BELOW MEASURES ONE INCH LONG ON THE ORIGINAL DRAWING.

DATE SEPT 1995
H & S JOB NUMBER 3786
CONTRACT NUMBER 1
DRAWING NUMBER G6
SHEET 7 OF 11

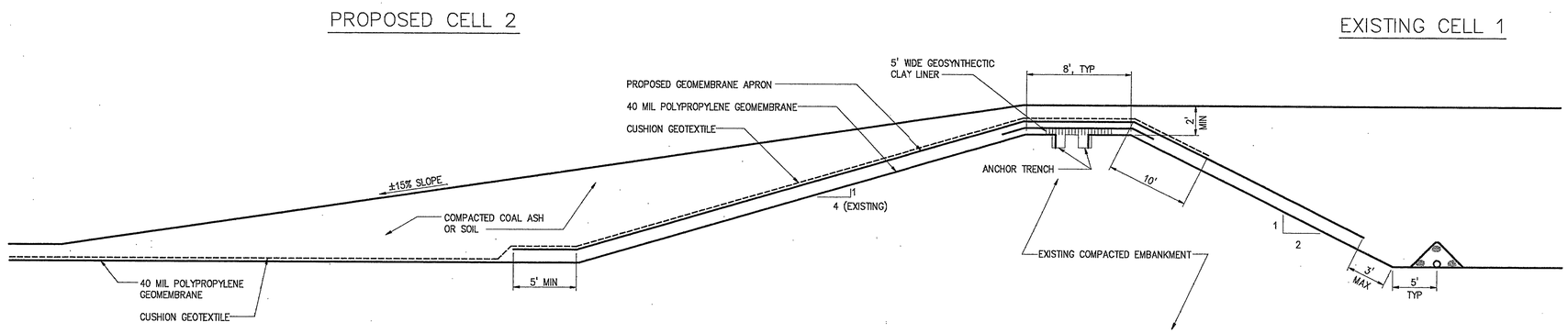

CONSTRUCTION ACCESS RAMP
CROSS-SECTION (TYP)

SECTION A / G3
1"=5'-0"

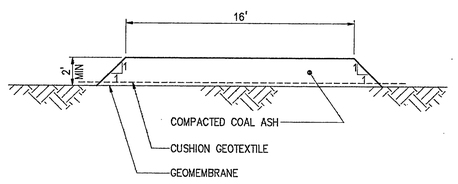

CONSTRUCTION ACCESS ROAD

DETAIL 1 / G3
1"=5'-0"

NO.	ISSUED FOR	DATE	BY
2	REGULATORY COMMENTS	2/96	DLC
1	REGULATORY APPROVAL	9/95	DLC

DESIGNED BEK
DRAWN PWS
CHECKED JAB
PROJ.ENGR. JAB
APPROVED

NORTH CAROLINA PROFESSIONAL SEAL 8397 ENGINEER DONALD L. CORDELL

NORTH CAROLINA PROFESSIONAL SEAL 8397 ENGINEER JOHN A. BOVE 7/9/96

HAZEN AND SAWYER
Environmental Engineers & Scientists
RALEIGH, NC CHARLOTTE, NC RICHMOND, VA

HALIFAX COUNTY, NORTH CAROLINA
SOLID WASTE DEPARTMENT

ASH MONOFILL - CELL 2
PERMIT APPLICATION DRAWINGS

MISCELLANEOUS DETAILS

THE SCALE BAR SHOWN BELOW MEASURES ONE INCH LONG ON THE ORIGINAL DRAWING.

DATE SEPT 1995
H & S JOB NUMBER 3786
CONTRACT NUMBER 1
DRAWING NUMBER G7
SHEET 8 OF 11

NOTES:

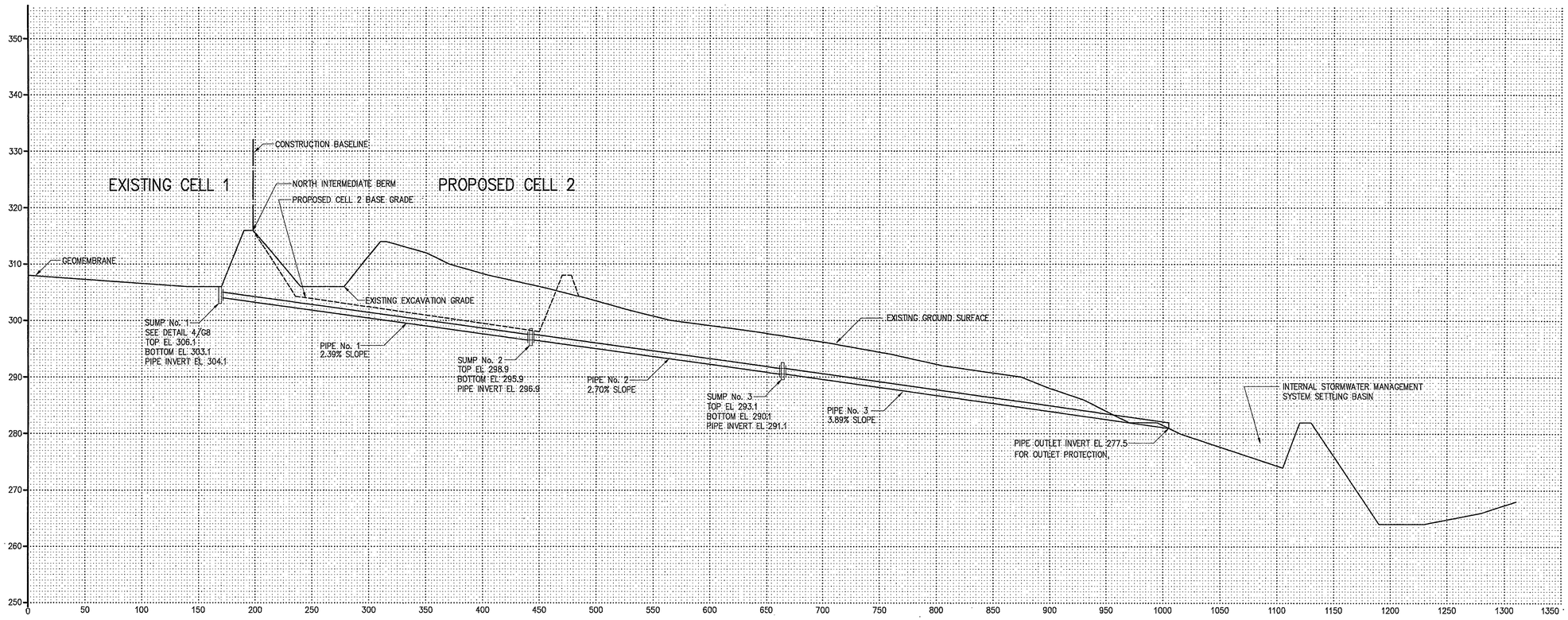

HEADER PIPE PROFILE (FOR INFORMATION ONLY)

SCALES
HORIZ 1"=50'
VERT 1"=10'

NO.	ISSUED FOR	DATE	BY
2	REGULATORY COMMENTS	2/96	DLC
1	REGULATORY APPROVAL	9/95	DLC

DESIGNED BEK
DRAWN PWS
CHECKED JAB
PROJ.ENGR. JAB
APPROVED

NORTH CAROLINA PROFESSIONAL SEAL 8397 ENGINEER DONALD L. CORDELL

NORTH CAROLINA PROFESSIONAL SEAL 8397 ENGINEER JOHN A. BOVE 2/9/96

HAZEN AND SAWYER
Environmental Engineers & Scientists
RALEIGH, NC CHARLOTTE, NC RICHMOND, VA

HALIFAX COUNTY, NORTH CAROLINA
SOLID WASTE DEPARTMENT

ASH MONOFILL - CELL 2
PERMIT APPLICATION DRAWINGS

INTERNAL STORMWATER MANAGEMENT SYSTEM
HEADER PIPE PROFILE

THE SCALE BAR SHOWN BELOW MEASURES ONE INCH LONG ON THE ORIGINAL DRAWING.

DATE SEPT 1995
H & S JOB NUMBER 3786
CONTRACT NUMBER 1
DRAWING NUMBER G8
SHEET 9 OF 11

EROSION AND SEDIMENTATION CONTROL PLAN

1"=100'-0"

NOTES:

1. GRADING PLAN IN CELL 1 AREA DENOTES TOP OF OPERATIONAL COVER GRADES.
2. CONTRACTOR SHALL BE RESPONSIBLE FOR CLEANOUT AND MAINTENANCE OF EXISTING SEDIMENT BASINS No. 1, 2 AND 3.

NO.	ISSUED FOR	DATE	BY
2	REGULATORY COMMENTS	2/96	DLC
1	REGULATORY APPROVAL	9/95	DLC

DESIGNED BEK
DRAWN PWS
CHECKED JAB
PROJ.ENGR. JAB
APPROVED

NORTH CAROLINA PROFESSIONAL SEAL 8397 ENGINEER DONALD L. CORDELL

NORTH CAROLINA PROFESSIONAL SEAL 10331 ENGINEER JOHN A. BOVE 2/9/96

HAZEN AND SAWYER
Environmental Engineers & Scientists
RALEIGH, NC CHARLOTTE, NC RICHMOND, VA

HALIFAX COUNTY, NORTH CAROLINA
SOLID WASTE DEPARTMENT

ASH MONOFILL - CELL 2
PERMIT APPLICATION DRAWINGS

CELL 2 – EROSION AND SEDIMENTATION CONTROL PLAN

THE SCALE BAR SHOWN BELOW MEASURES ONE INCH LONG ON THE ORIGINAL DRAWING.

DATE SEPT 1995
H & S JOB NUMBER 3786
CONTRACT NUMBER 1
DRAWING NUMBER G9
SHEET 10 OF 11

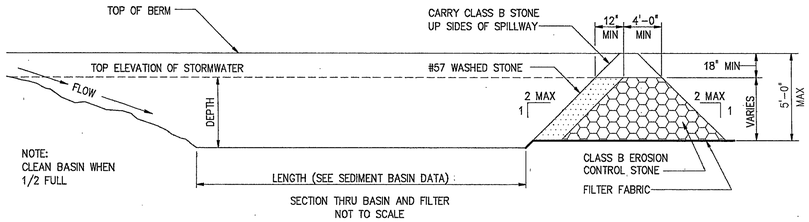

SECTION THRU BASIN AND FILTER
NOT TO SCALE

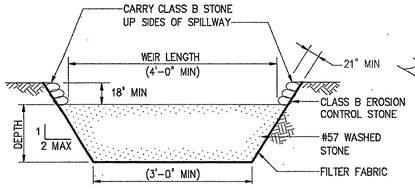

SECTION THRU BERM AND FILTER
NOT TO SCALE

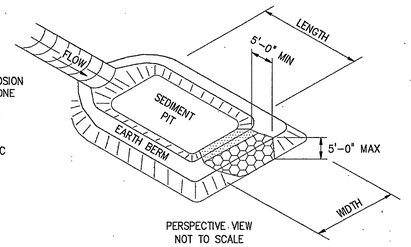

PERSPECTIVE VIEW
NOT TO SCALE

TEMPORARY SEDIMENT BASIN

0227004

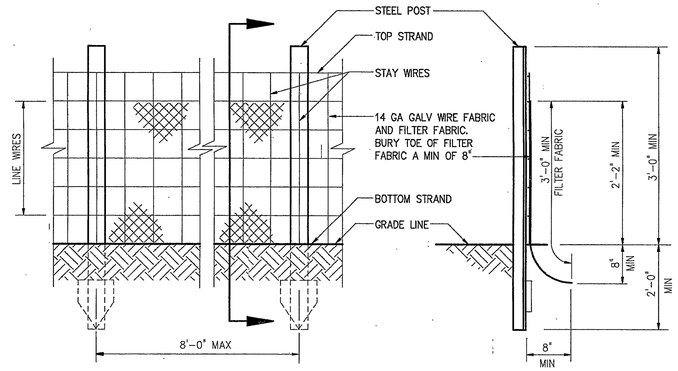

ELEVATION
SILT FENCE

SECTION
SILT FENCE

NOTE:
1. EXTRA STRENGTH FILTER FABRIC (AS APPROVED BY ENGINEER) WITH 6'-0" POST SPACING DOES NOT REQUIRE MESH SUPPORT FENCE.
2. FILTER FABRIC SHALL BE STAPLED OR WIRED DIRECTLY TO POST.

0227000

APPLICATION RATES IN POUNDS/ACRE							
SEED*** MIXTURE	PLANTING SEASON	LIME*	SEED	FERTILIZER**	WOOD MULCH	TOPDRESSING*	COMMENTS
P	FEB 1–MAY 31 SEPT 1–NOV 30	4000	150	500	1500	500 OF 10–20–20 60 OF NITROGEN	PREFERRED PLANTING SEASONS ARE SEPT 15–OCT 15 AND FEB 15–APRIL 30. ADD 25#/ACRE SUDANGRASS DURING MAY. ADD 25#/ACRE HYBRID RYE DURING NOV.
TW	DEC 1–JAN 31	N/A	100	400	500	N/A	OVER SEED WITH TYPE P SEED MIXTURE DURING NEXT PLANTING SEASON
TS	JUNE 1–AUG 31	N/A	35	400	500	N/A	OVER SEED WITH TYPE P SEED MIXTURE DURING NEXT PLANTING SEASON

* APPLICATION RATES AND/OR CHEMICAL ANALYSIS SHALL BE CONFIRMED OR ESTABLISHED BY SOIL TEST.

** FERTILIZER SHALL BE 10–20–20 ANALYSIS. UPON WRITTEN APPROVAL OF THE HALIFAX COUNTY PUBLIC WORKS DEPARTMENT. A DIFFERENT ANALYSIS OF FERTILIZER MAY BE USED PROVIDED THE 1–2–2 RATIO IS MAINTAINED AND THE RATE OF APPLICATION ADJUSTED TO PROVIDE THE SAME AMOUNT OF PLANT FOOD AS A 10–20–20 ANALYSIS.

*** SEED MIXTURES TO BE USED ON THE PROJECT SHALL BE AS FOLLOWS:

P – PERMANENT SEEDING
125#/ACRE KENTUCKY 31 TALL FESCUE

TW – TEMPORARY WINTER SEEDING
50#/ACRE HYBRID RYE

TS – TEMPORARY SUMMER SEEDING
50#/ACRE PEARL OR BROWN TOP MILLET

ON CUT AND FILL SLOPES 2H:1V OR STEEPER, ADD 30#/ACRE SERICEA LESPEDEZA TO TYPE P SEED MIXTURE.
USE SCARIFIED SEED FOR SPRING PLANTINGS AND UNSCARIFIED FOR FALL PLANTINGS.

SEEDING SCHEDULE
HALIFAX COUNTY ASH MONOFILL CELL–2

DETAIL 1
NO SCALE G10

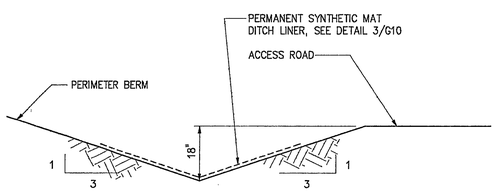

PERMANENT LINED DITCH

DETAIL 2
NTS G9

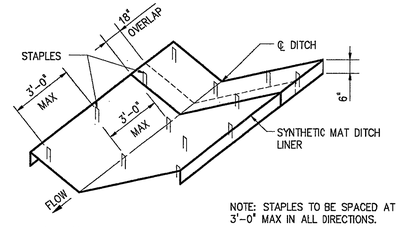

NOTE: STAPLES TO BE SPACED AT 3'-0" MAX IN ALL DIRECTIONS.

PERSPECTIVE VIEW

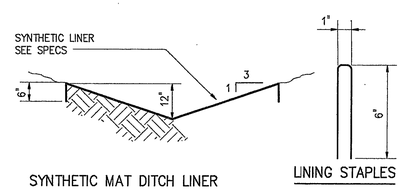

SYNTHETIC MAT DITCH LINER

LINING STAPLES

PERMANENT SYNTHETIC MAT
DITCH LINER INSTALLATION

DETAIL 3
NTS G10

NO.	ISSUED FOR	DATE	BY
2	REGULATORY COMMENTS	2/96	DLC
1	REGULATORY APPROVAL	9/95	DLC

DESIGNED BEK
DRAWN PWS
CHECKED JAB
PROJ.ENGR. JAB
APPROVED

NORTH CAROLINA PROFESSIONAL SEAL 8397 ENGINEER DONALD L. CORDELL

NORTH CAROLINA PROFESSIONAL SEAL 8351 ENGINEER JOHN A. BOYE 2/9/96

HAZEN AND SAWYER
Environmental Engineers & Scientists
RALEIGH, NC CHARLOTTE, NC RICHMOND, VA

HALIFAX COUNTY, NORTH CAROLINA
SOLID WASTE DEPARTMENT

ASH MONOFILL - CELL 2
PERMIT APPLICATION DRAWINGS

EROSION AND SEDIMENTATION CONTROL
SECTIONS AND DETAILS

THE SCALE BAR SHOWN BELOW MEASURES ONE INCH LONG ON THE ORIGINAL DRAWING.

DATE SEPT 1995
H & S JOB NUMBER 3786
CONTRACT NUMBER 1
DRAWING NUMBER G10
SHEET 11 OF 11