SW-11-021-3 4204 20000515 P-0

Permit:	42-04
Name:	Coal Ashe Monofill, Cell 2
County:	Halifax
Shipped Date:	
Box:	SW-11-021
Document Type:	Other (O)
Document Date:	5/15/2000
Division:	Waste Management (WM)
Sub-Division:	Solid Waste (SW)
Document Category:	Facility (F)
Document Group:	Authorization or Permit (P)
Description:	Map: . Maps in Roll:

HALIFAX COUNTY SOLID WASTE DEPARTMENT
HALIFAX COUNTY, NORTH CAROLINA

ASH MONOFILL - CELL 2
RECORD DRAWINGS

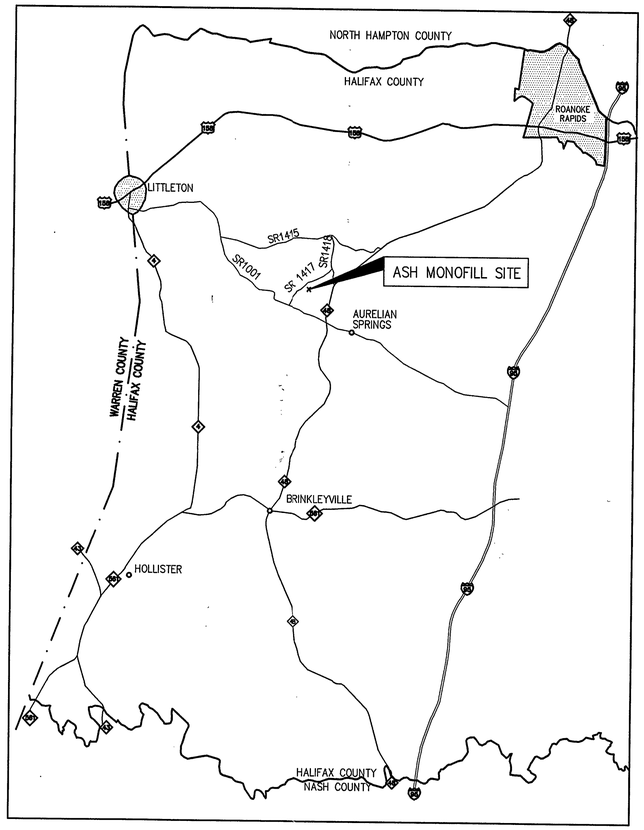

LOCATION MAP

APRIL 2000

NORTH CAROLINA PROFESSIONAL SEAL 8397 ENGINEER DONALD L. CORDELL

NORTH CAROLINA PROFESSIONAL SEAL 8391 ENGINEER JOHN A. BOVE 4/3/00

HAZEN AND SAWYER
Environmental Engineers & Scientists
RALEIGH, NORTH CAROLINA

RECEIVED
APR 24 2000
DIVISION OF WASTE MANAGEMENT
FAYETTEVILLE REGIONAL OFFICE

APPROVED
DIVISION OF SOLID WASTE MANAGEMENT
DATE 5/15/00 BY SLC
42-04

42-04
5/15/00

ISSUED FOR CONSTRUCTION
BY _____ DATE _____

ALIFAX CO. 42-04
OAL ASH MONOFILL CELL 2
PPRV'D 5/15/00

ABBREVIATIONS

AB	ANCHOR BOLT
AC	ALTERNATING CURRENT/ ASBESTOS CEMENT
ACT	ACOUSTIC TILE
AD	AREA DRAIN
ADJ	ADJUSTABLE
AFF	ABOVE FINISHED FLOOR
AGGR	AGGREGATE
AL	ALUMINUM
ALLOW	ALLOWANCE/ALLOWABLE
ALT	ALTERNATE
APPROX	APPROXIMATE
ARCH	ARCHITECTURAL
ASB	ASBESTOS
ASPH	ASPHALT
AT	ASPHALT TILE
B	BORING
BD	BOARD
BFE	BOTTOM OF FITTING ELEV
BFV	BUTTERFLY VALVE
BITUM	BITUMINOUS
BL	BASELINE
BL	BUILDING LINE
BLDG	BUILDING
BLK	BLOCK
BM	BENCH MARK
BOC	BACK OF CURB
BOT	BOTTOM
BRG	BEARING
BRK	BRICK
BRZ	BRONZE
BSMT	BASEMENT
BT	BOLT
BUR	BUILT-UP ROOFING
BV	BALL VALVE
C	CLOSET/CARPET/CHANNEL
CAB	CABINET
CB	CATCH BASIN
C/C	CENTER TO CENTER
CE	CONSTRUCTION EASEMENT
CEM	CEMENT
CER	CERAMIC
CF	CUBIC FEET
CFM	CUBIC FEET PER MINUTE
CI	CAST IRON/CUBIC INCHES
CIP	CAST IRON PIPE
℄	CENTER LINE
CL_2	CHLORINE
CLG	CEILING
CLKG	CAULKING
CLR	CLEAR
CMP	CORRUGATED METAL PIPE
CMU	CONCRETE MASONRY UNIT
CO	CLEANOUT
COL	COLUMN
CONC	CONCRETE
CONST	CONSTRUCTION
CONT	CONTINUOUS
CONTR	CONTRACTOR
CORP	CORPORATION
CORR	CORRIDOR
CP	CONCRETE PLANK
CRS	COURSE
CT	CERAMIC TILE
CTJ	CONTROL JOINT
CU	COPPER
CV	CHECK VALVE
CW	COLD WATER
CY	CUBIC YARD
DC	DIRECT CURRENT
DET	DETAIL
DF	DRINKING FOUNTAIN
DIA (ø)	DIAMETER
DIAG	DIAGONAL
DIM	DIMENSION
DIP	DUCTILE IRON PIPE
DISCH	DISCHARGE
DIST	DISTRIBUTION
DJ	DOUBLE JOIST
DL	DEAD LOAD
DN	DOWN
DOZ	DOZEN
DR	DOOR
DWG	DRAWING
DWL	DOWEL
E	EAST/EASEMENT
EA	EACH
ECC	ECCENTRIC
EF	EACH FACE
EFF	EFFLUENT
EIP	EXIST IRON PIPE
EL OR ELEV	ELEVATION
ELEC	ELECTRIC/ELECTRICAL
ELL	ELBOW
ENGR	ENGINEER
ENT	ENTRANCE
EOG	EDGE OF GRAVEL
EOP	EDGE OF PAVEMENT
EQ	EQUAL
EQPT	EQUIPMENT
EW	EACH WAY
EX	EXISTING
EXC	EXCAVATE
EXH	EXHAUST
EXP	EXPANSION
EXT	EXTERIOR

FAB	FABRICATE
F&C	FRAME AND COVER
F&G	FRAME AND GRATE
FC	FLUSHING CONNECTION
FD	FLOOR DRAIN
FDN	FOUNDATION
FE	FIRE EXTINGUISHER
FF	FINISH FLOOR
FH	FIRE HYDRANT
FIN	FINISH
FIX	FIXTURE
FL	FLASHING/FLOOR
FLEX	FLEXIBLE
FLG	FLANGE
FLUOR	FLUORESCENT
FLXC	FLEXIBLE CONNECTION
FM	FORCE MAIN
FPRF	FIREPROOF
FRP	FIBERGLASS REINFORCED POLYESTER LAMINATE
FT	FEET
FTG	FOOTING/FITTING
FURR	FURRING/FURRED
G	GAS/GAS LINE
GA	GAUGE
GAL	GALLON
GALV	GALVANIZED
GC	GENERAL CONTRACTOR
GEN	GENERATOR
GI	GALVANIZED IRON
GL	GLASS
GPM	GALLONS PER MINUTE
GR	GRADE
GV	GATE VALVE
GW	GUY WIRE
GWB	GYPSUM WALL BOARD
GWF	GLAZED WALL FINISH
GYP	GYPSUM
H	HEIGHT
HDW	HARDWARE
HEX	HEXAGONAL
HM	HOLLOW METAL
HORZ	HORIZONTAL
HP	HORSEPOWER
HPT	HIGH POINT
HTR	HEATER
HVAC	HEATING, VENTILATION AND AIR CONDITIONING
HW	HOT WATER
HWL	HIGH WATER LEVEL
HWY	HIGHWAY
HYD	HYDRAULIC
I	IRON
ID	INSIDE DIAMETER
IF	INSIDE FACE
IN	INCH
INCL	INCLUDED
INF	INFLUENT
INS	INSULATION
INT	INTERIOR
INV	INVERT
J	JOIST
JB	JUNCTION BOX
JCT	JUNCTION
JT	JOINT
L	LENGTH/ANGLE
LA	LINE AHEAD
LAB	LABORATORY
LAM	LAMINATED
LAT	LATERAL
LAV	LAVATORY
LB	POUND/LINE BACK
LF	LINEAR FEET
LG	LONG
LL	LIVE LOAD
LLH	LONG LEG HORIZONTAL
LLV	LONG LEG VERTICAL
LP	LIGHT POLE
LPT	LOW POINT
LT	LIGHT
LTG	LIGHTING
LVR	LOUVER
LWL	LOW WATER LEVEL

MAINT	MAINTENANCE
MATL	MATERIAL
MAX	MAXIMUM
MECH	MECHANICAL
MEMB	MEMBRANE
MET	METAL
MFR	MANUFACTURER
MG	MILLION GALLONS
MGD	MILLION GALLONS PER DAY
MH	MANHOLE
MIN	MINIMUM
MISC	MISCELLANEOUS
MJ	MECHANICAL JOINT
MLDG	MOLDING
MO	MASONRY OPENING
MOD	MODIFY/MODIFIED
MON	MONUMENT
MOT	MOTOR
MTD	MOUNTED
MTG	MOUNTING
MULT	MULTIPLE
N	NORTH
NA	NOT APPLICABLE
NF	NEAR FACE
NIC	NOT IN CONTRACT
NO	NUMBER
NOM	NOMINAL
NPW	NON POTABLE WATER
NTS	NOT TO SCALE
OC	ON CENTER
OD	OUTSIDE DIAMETER
OF	OUTSIDE FACE
OFF	OFFICE
OPER	OPERATOR
OPNG	OPENING
OPP	OPPOSITE
ORIG	ORIGINAL
OT	OPEN TRUSS
OVHD	OVERHEAD
PAR	PARALLEL
PC	POINT OF CURVE/PIECE
PCC	POINT OF COMPOUND CURVE
PCF	POUNDS PER CUBIC FOOT
PE LINING	POLYETHYLENE LINING
PERF	PERFORATED
PERP	PERPENDICULAR
PI	POINT OF INTERSECTION
PL	PROPERTY LINE/PLATE
PNL	PANEL
PP	POWER POLE
PREFAB	PREFABRICATED
PRV	PRESSURE RELIEF VALVE
PS	PUMPING STATION
PSF	POUNDS PER SQUARE FOOT
PSI	POUNDS PER SQUARE INCH
PT	POINT OF TANGENT/POINT
PTN	PARTITION
PV	PLUG VALVE
PVC	POLYVINYL CHLORIDE
PVMT	PAVEMENT
PW	POTABLE WATER
QTY	QUANTITY
R	RADIUS/RISER
RCP	REINFORCED CONCRETE PIPE
RD	ROAD/ROOF DRAIN
RECIR	RECIRCULATION
RECP	RECEPTACLE
RECT	RECTANGULAR
RED	REDUCER
REF	REFERENCE
REG	REGISTER
REINF	REINFORCING
REM	REMOVE
REQD	REQUIRED
REST	RESTRAINED
REV	REVISE
RF	ROOF
RFG	ROOFING
RJ	RESTRAINED JOINT
RM	ROOM
RND	ROUND
RO	ROUGH OPENING
RPM	REVOLUTIONS PER MINUTE
RR	RAILROAD
RT	RIGHT
RTU	REMOTE TERMINAL UNIT
RW	RAW WATER
R/W	RIGHT OF WAY

S	SOUTH/SLOPE
SAN	SANITARY
SBL	SURVEY BASELINE
SCH	SCHEDULE
SD	STORM/SITE DRAIN
SECT	SECTION
SERV	SERVICE
SEW	SEWER
SF	SQUARE FEET
SHT	SHEET
SI	SQUARE INCH
SIM	SIMILAR
SJ	STEEL JOIST
SPEC	SPECIFICATION
SQ	SQUARE
SS	SANITARY SEWER
SST	STAINLESS STEEL
ST	STREET
STA	STATION
STD	STANDARD
STG	STORAGE
STIR	STIRRUP
STL	STEEL
STR	STRUCTURAL
SUB	SUBSTITUTE
SUP	SUPPLY
SUPT	SUPERINTENDENT
SUR	SURFACE
SUSP	SUSPENDED
SW	SWITCH
SWBD	SWITCHBOARD
SWD	SIDE WATER DEPTH
SYM	SYMMETRICAL
T	TREAD
T&B	TOP AND BOTTOM
T&G	TONGUE AND GROOVE
TAN	TANGENT
TBM	TEMPORARY BENCH MARK
TC	TOP OF CURB
TDH	TOTAL DYNAMIC HEAD
TECH	TECHNICAL
TEL	TELEPHONE
TEMP	TEMPERATURE
TER	TERRAZZO
THERMO	THERMOSTAT
THK	THICK
THRU	THROUGH
TOD	TOP OF DECK
TOF	TOP OF FOOTING
TOM	TOP OF MASONRY/MANHOLE
TOS	TOP OF SLAB
TOW	TOP OF WALL
TOL	TOLERANCE
TPS	TWISTED PAIR SHIELDED
TRANS	TRANSFORMER
TYP	TYPICAL
UG	UNDERGROUND
UH	UNIT HEATER
UNFIN	UNFINISHED
UR	URINAL
UTIL	UTILITY
VAC	VACUUM
VAT	VINYL ASBESTOS TILE
VCP	VITRIFIED CLAY PIPE
VEL	VELOCITY
VENT	VENTILATING/VENTILATION
VERT	VERTICAL
VOL	VOLUME
VP	VENT PIPE
VWC	VINYL WALL COVERING
W	WEST/WIDTH
W/	WITH
WC	WATER CLOSET
WF	WIDE FLANGE
WH	WALL HYDRANT
WI	WROUGHT IRON
WL	WATER LEVEL
W/L	WATER LINE
WO	WINDOW OPENING
W/O	WITHOUT
WP	WATERPROOF
WPFG	WATER PROOFING
WPT	WALL PENETRATING TYPE
WSE	WATER SURFACE ELEVATION
WSP	WEATHERSTRIP
WT	WEIGHT
WV	WATER VALVE
WWF	WELDED WIRE FABRIC
YD	YARD
YR	YEAR

INDEX OF DRAWINGS

SHEET NO.	DRAWING NO.	DESCRIPTION
		COVER
1	X1	INDEX OF DRAWINGS, SYMBOLS AND ABBREVIATIONS
2	G1	FACILITY PLAN
3	G2	EXISTING SITE CONDITIONS
4	G3	CELL 2 – GEOMEMBRANE GRADING PLAN
5	G4	BERM DETAILS
6	G5	MISCELLANEOUS DETAILS
7	G6	MISCELLANEOUS INTERNAL STORMWATER MANAGEMENT SYSTEM DETAILS
8	G7	MISCELLANEOUS DETAILS
9	G8	INTERNAL STORMWATER MANAGEMENT SYSTEM HEADER PIPE PROFILE
10	G9	CELL 2 – EROSION AND SEDIMENTATION CONTROL PLAN
11	G10	EROSION AND SEDIMENTATION CONTROL SECTIONS AND DETAILS

LEGEND

MATERIALS

- GRADE OR EARTH
- ASPHALT PAVING
- SAND
- GRAVEL
- CONCRETE
- CONC. FILL OR GROUT
- CONC. MASONRY UNIT
- BRICK
- ROCK
- STEEL
- INSULATION
- WATER SURFACE
- GRATING
- CHECKERED PLATE
- GLASS
- WOOD BLOCKING

SYMBOLS

- PROPOSED PIPE
- — W — EXIST. WATER LINE
- — F/O — EXIST. FIBER OPTIC CABLE
- — SS — EXIST. SANITARY SEWER
- — SD — EXIST. STORM DRAIN
- — E — EXIST. ELECTRICAL
- — T — EXIST. TELEPHONE
- — G — EXIST. GAS
- EXIST. VALVE
- NEW VALVE
- SILT FENCE
- NEW AIR/VACUUM VALVE ASSEMBLY
- FH EXIST. FIRE HYDRANT
- MH EXIST. SAN. SEWER MH
- WM EXIST. WATER METER
- PP EXIST POWER POLE
- CO EXIST. SS CLEANOUT
- AP SOIL BORING/AUGER PROBE
- SR SEISMIC LINE
- EXIST GROUND PROFILE
- CREEK / DITCH
- EXIST EDGE OF PAV'MT

SECTION AND DETAIL KEYING

DRAWINGS ARE CROSS REFERENCED IN THE FOLLOWING METHOD:

(A) A SECTION CUT ON DRAWING A3 IS IDENTIFIED AS FOLLOWS:

A — SECTION LETTER
A6 — DRAWING WHERE SECTION IS SHOWN

(B) THE SECTION SHOWN ON DRAWING A6 IS IDENTIFIED AS FOLLOWS:

A — SECTION LETTER
A3 — DRAWING FROM WHERE SECTION WAS TAKEN

DETAILS ARE CROSS REFERENCED IN A SIMILAR MANNER, EXCEPT DETAILS ARE IDENTIFIED BY A SQUARE WITH A NUMBER IN THE UPPER HALF.

STANDARD DETAILS ARE REFERENCED BY A UNIQUE SEVEN DIGIT NUMBER AND ARE SHOWN ON THE CONTRACT DRAWINGS BY ONE OF THE TWO METHODS:

XXXXXXX → REFERENCED ITEM

OR

SEE DETAIL XXXXXXX

THE STANDARD DETAILS ARE COMPILED IN THE REAR OF THE CONTRACT DRAWINGS.

LINETYPES

- PROPOSED ITEMS
- EXISTING ITEMS
- HIDDEN ITEMS
- DEMOLITION ITEMS
- CENTER LINE
- MATCH LINE

RECORD DRAWING

NO.	ISSUED FOR	DATE	BY
5	RECORD DRAWING	4/00	
4	REBID CONSTRUCTION	7/98	DLC
3	CONSTRUCTION	6/96	DLC
2	REGULATORY COMMENTS	2/96	DLC
1	REGULATORY APPROVAL	9/95	DLC

DESIGNED BEK
DRAWN PWS
CHECKED RCB
PROJ.ENGR. JAB
APPROVED

NORTH CAROLINA PROFESSIONAL SEAL 8397 ENGINEER DONALD L. CORDELL

NORTH CAROLINA PROFESSIONAL SEAL 19391 ENGINEER JOHN A. BOVE 4/3/00

HAZEN AND SAWYER
Environmental Engineers & Scientists
RALEIGH, NORTH CAROLINA

HALIFAX COUNTY, NORTH CAROLINA
SOLID WASTE DEPARTMENT

ASH MONOFILL - CELL 2
CONSTRUCTION DRAWINGS

INDEX OF DRAWINGS, SYMBOLS AND ABBREVIATIONS

THE SCALE BAR SHOWN BELOW MEASURES ONE INCH LONG ON THE ORIGINAL DRAWING.

DATE JUNE 1996
H & S JOB NUMBER 3786
CONTRACT NUMBER 1
DRAWING NUMBER X1
SHEET 1 OF 11

PLOT DATE 04/01/00 10:57am FILE= H:\3786ab\GEN\X001 by RCBAKER XREFs=MISC\3786tb.dwg,

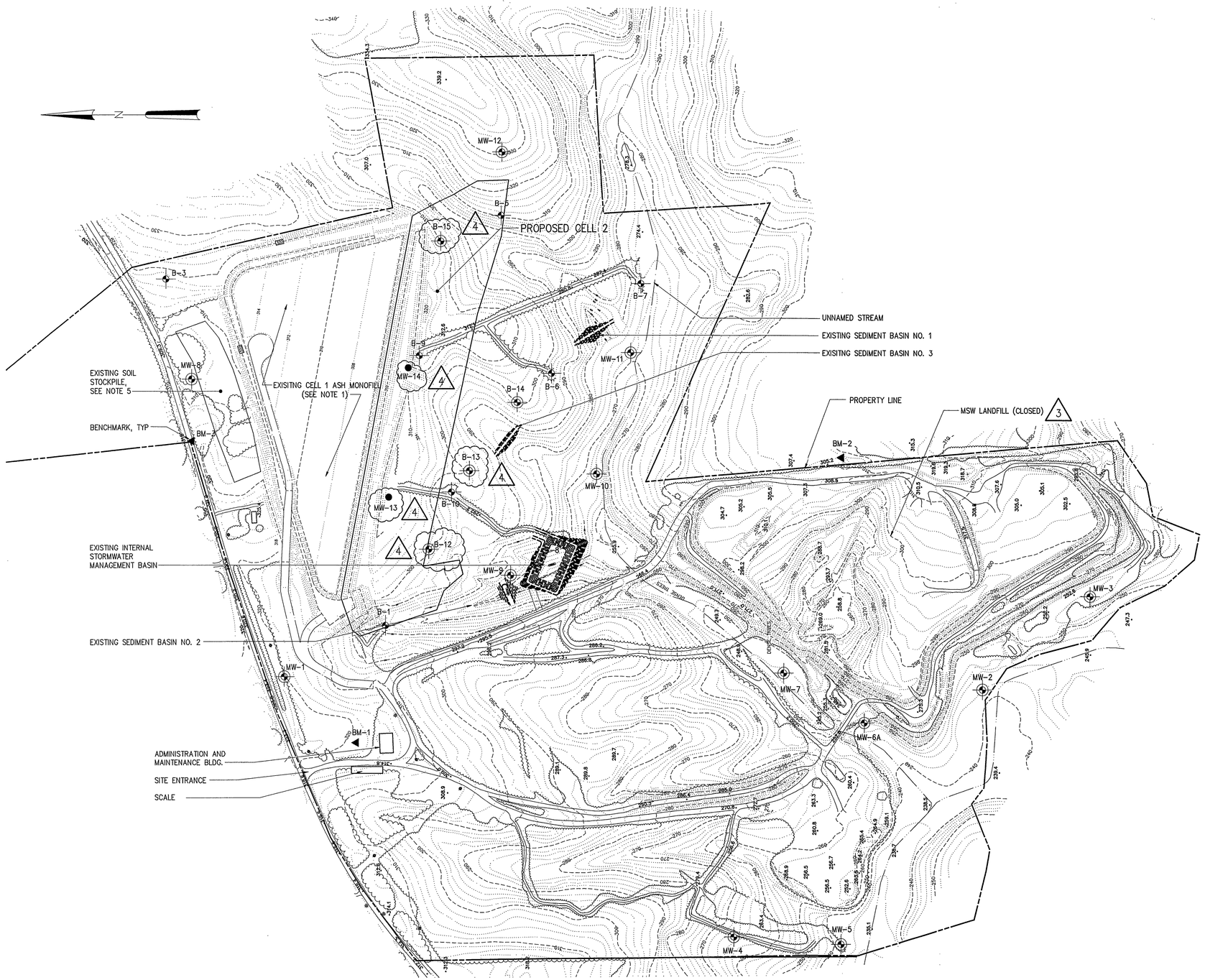

PLAN

1"=200'-0"

NOTES:

1. ELEVATION CONTOURS SHOWN FOR CELL 1 ARE TOP OF OPERATIONAL COVER. CELL 1 IS CURRENTLY IN OPERATION, THEREFORE, ELEVATIONS SHOWN DO NOT REPRESENT ACTUAL CONDITIONS.
2. GROUND SURFACE ELEVATIONS IN CELL 2 AREA ARE BASED UPON 1991 AERIAL TOPOGRAPHIC SURVEY CONDUCTED BY PEIDMONT AERIAL SURVEYS AND MAY NOT REFLECT EXISITNG LINES AND GRADES. FOR EXISITNG CONDITIONS SEE DRAWING G2.
3. CONTRACTOR SHALL PROTECT ALL EXISTING MONITORING WELLS, STRUCTURES AND FACILITIES.
4. CONTRACTOR SHALL MAINTAIN ACCESS TO ASH MONOFILL FOR USE BY OWNER.
5. EXISTING SOIL STOCKPILE FOR ASH MONOFILL OPERATIONS ONLY, NOT FOR CONSTRUCTION OF CELL 2. EXCESS SOIL FROM CELL 2 CONSTRUCTION SHALL BE PLACED ON EXISTING STOCKPILE BY THE CONTRACTOR.
6. WELLS MW-13, MW-14, B-12, B-13 AND B-15 WERE ABANDONED PRIOR TO CELL 2 CONSTRUCTION.

LEGEND

MW-4	DENOTES EXISTING PERMANENT MONITORING WELL LOCATION AND IDENTIFYING NUMBER
B-1	DENOTES ABANDONED BORING OR PIEZOMETER INSTALLED DURING SITE SUITABILTY STUDY, 2/91.
B-14	DENOTES EXISITNG TEMPORARY PIEZOMETER AND IDENTIFYING NUMBER
BM-1	DENOTES PERMANENT SURVEYING BENCHMARK
MW-14	DENOTES EXISTING TEMPORARY DOWNSTREAM MONITORING WELL AND IDENTIFYING NUMBER

RECORD DRAWING

NO.	ISSUED FOR	DATE	BY
4	RECORD DRAWING	4/00	
3	REBID CONSTRUCTION	7/98	DLC
2	CONSTRUCTION	6/96	DLC
1	REGULATORY APPROVAL	9/95	DLC

DESIGNED BEK
DRAWN PWS
CHECKED KB
PROJ.ENGR. JAB
APPROVED

NORTH CAROLINA PROFESSIONAL SEAL 8397 ENGINEER DONALD L. CORDELL

NORTH CAROLINA PROFESSIONAL SEAL 8391 ENGINEER JOHN A. BOVE 4/13/00

HAZEN AND SAWYER
Environmental Engineers & Scientists
RALEIGH, NORTH CAROLINA

HALIFAX COUNTY, NORTH CAROLINA
SOLID WASTE DEPARTMENT

ASH MONOFILL - CELL 2
CONSTRUCTION DRAWINGS

FACILITY PLAN

THE SCALE BAR SHOWN BELOW MEASURES ONE INCH LONG ON THE ORIGINAL DRAWING.

DATE JUNE 1996
H & S JOB NUMBER 3786
CONTRACT NUMBER 1
DRAWING NUMBER G1
SHEET 2 OF 11

PLOT DATE 04/06/00 11:53am FILE= H:\3786\dwg\G01\G001 by ROBAKER XREF=BASE\SP-TP110, BASE\SP-TP120, BASE\SP-TP200, BASE\SP-TP300, MESH\3786ts.dwg

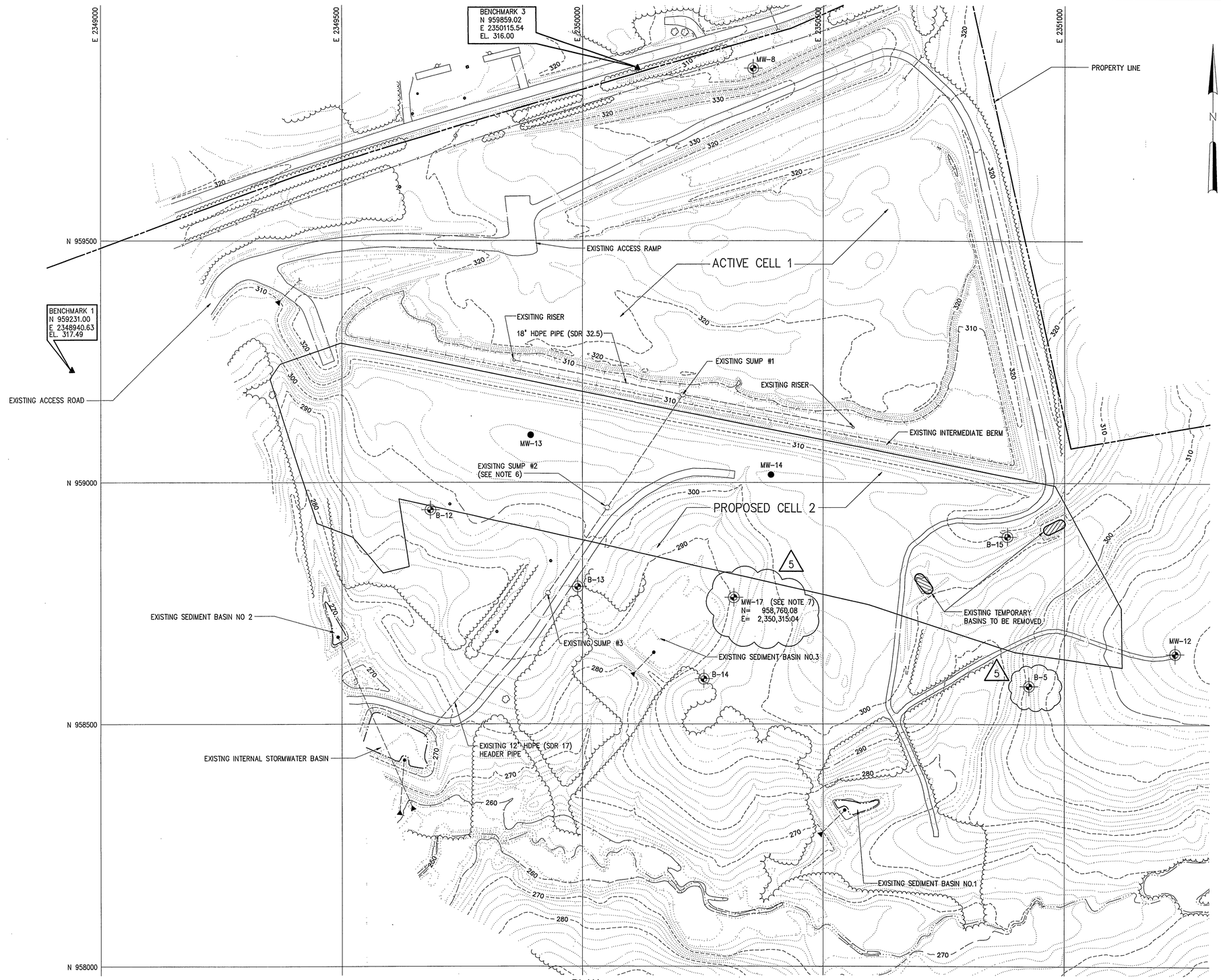

PLAN

1"=100'-0"

NOTES:

1. EXISTING TOPOGRAPHY COMPILED BY PIEDMONT AERIAL SURVEYS, GREENSBORO, NC FROM PHOTOGRAPHY DATED 2/26/96.
2. CELL 1 IS CURRENT ACTIVE CELL, THEREFORE, CONTOURS SHOWN FOR CELL 1 DO NOT REFLECT CURRENT CONDITIONS.
3. (5) MONITORING WELLS MW-13 AND MW-14, AND PIEZOMETERS B-12, B-13 AND B-15 WERE ABANDONED ON 10/13 AND 10/14/98 BY GRAHAM AND CURRIE, WEST END, NORTH CAROLINA. PIEZOMETER B-5 WAS ABANDONED ON 1/7/99 BY GEOTECHNOLOGIES, INC., RALEIGH, NORTH CAROLINA.
4. CONTRACTOR TO REMOVE TEMPORARY BASINS IN CELL 2 AREA.
5. FOR EXISTING AND PROPOSED EROSION CONTROL STRUCTURES, SEE DRAWING G9.
6. FOR EXISTING TEMPORARY SUMP PROTECTION, SEE DETAIL 4/G5.
7. (5) MONITORING WELL MW-17 WAS INSTALLED ON 1/7/99 BY GEOTECHNOLOGIES, INC., RALEIGH, NORTH CAROLINA.

LEGEND

MW-4	DENOTES EXISTING PERMANENT MONITORING WELL LOCATION AND IDENTIFYING NUMBER
B-14	DENOTES EXISTING TEMPORARY PIEZOMETER AND IDENTIFYING NUMBER
MW-14 ●	DENOTES EXISITNG TEMPORARY DOWNSTREAM MONITORING WELL AND IDENTIFYING NUMBER
▲	DENOTES SURVEYING BENCHMARK
---330---	EXISTING INDEX ELEVATION CONTOUR
.....	EXISTING INTERMEDIATE ELEVATION CONTOUR
MW-17 ○	DENOTES PROPOSED TEMPORARY DOWNSTREAM MONITORING WELL AND IDENTIFYING NUMBER

RECORD DRAWING

NO.	ISSUED FOR	DATE	BY
5	RECORD DRAWING	4/00	
4	REBID CONSTRUCTION	7/98	DLC
3	CONSTRUCTION	6/96	DLC
2	REVISED TOPOGRAPHY	5/96	DLC
1	REGULATORY APPROVAL	9/95	DLC

DESIGNED BEK
DRAWN PWS
CHECKED RCB
PROJ.ENGR. JAB
APPROVED

NORTH CAROLINA PROFESSIONAL SEAL 8397 ENGINEER DONALD L. CORDELL

NORTH CAROLINA PROFESSIONAL SEAL 9391 ENGINEER JOHN A. BOYE 4/13/00

HAZEN AND SAWYER
Environmental Engineers & Scientists
RALEIGH, NORTH CAROLINA

HALIFAX COUNTY, NORTH CAROLINA
SOLID WASTE DEPARTMENT

ASH MONOFILL - CELL 2
CONSTRUCTION DRAWINGS

EXISTING SITE CONDITIONS

THE SCALE BAR SHOWN BELOW MEASURES ONE INCH LONG ON THE ORIGINAL DRAWING.

DATE JUNE 1996
H & S JOB NUMBER 3786
CONTRACT NUMBER 1
DRAWING NUMBER G2
SHEET 3 OF 11

PLOT DATE: 05/07/99 8:35am S:1 FILE:C2G2G.dwg by PHIBBS XREF:n:\3786AB\BASE\CBL, n:\3786AB\BASE\DP-XB, n:\3786AB\MISC\3786Ab.dwg

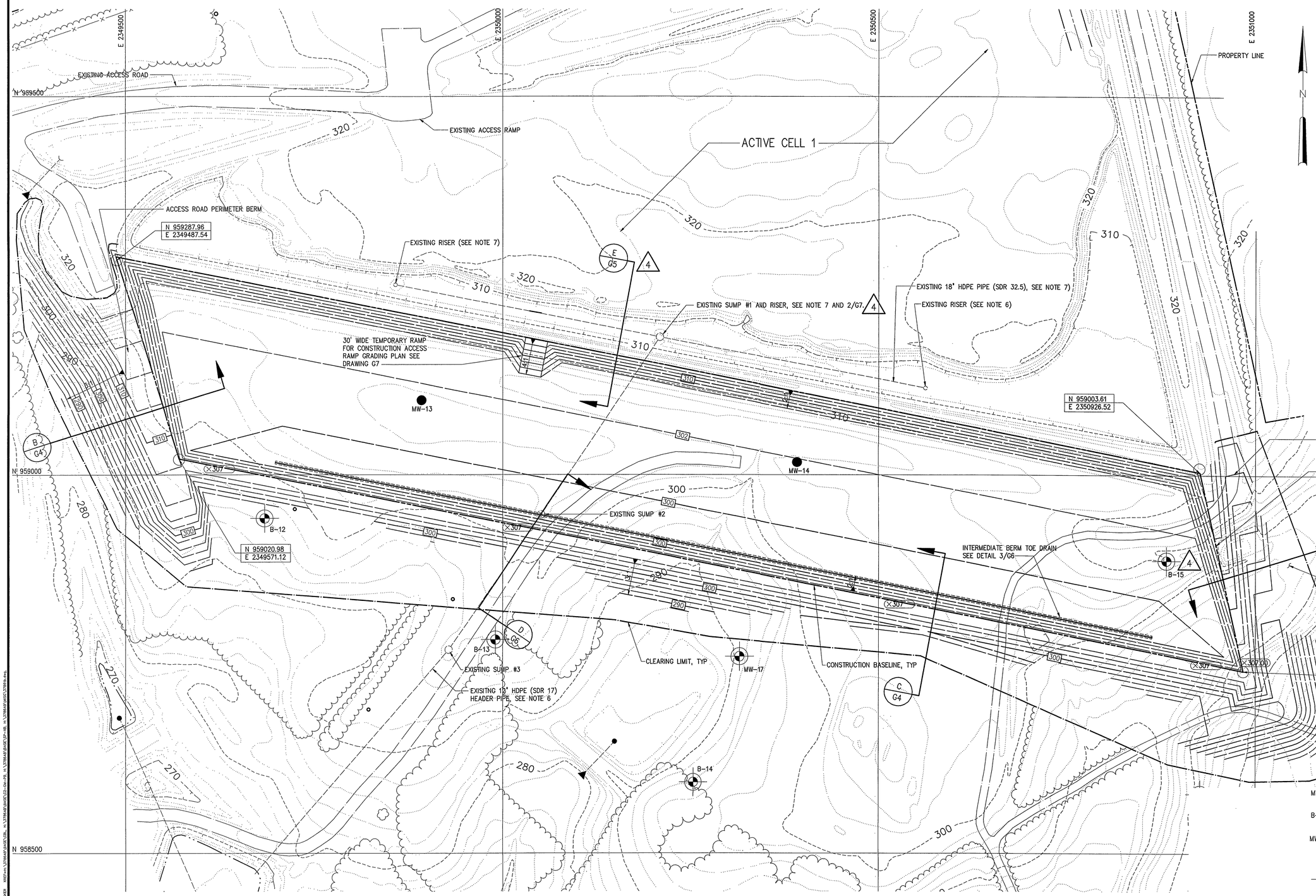

NOTES:

1. EXISTING TOPOGRAPHY COMPILED BY PIEDMONT AERIAL SURVEYS, GREENSBORO, NC FROM PHOTOGRAPHY DATED 2/26/96.
2. CELL 1 IS CURRENT ACTIVE CELL, THEREFORE, CONTOURS SHOWN FOR CELL 1 DO NOT REFLECT CURRENT CONDITIONS.
3. PROPOSED GRADES INSIDE CELL 2 DENOTE GEOMEMBRANE SUBGRADE ELEVATIONS.
4. FOR EROSION AND SEDIMENT CONTROL AND CLEANOUT SCHEDULE SEE DRAWING G9.
5. (4) CONTRACTOR SHALL REMOVE STANDING WATER FROM SOUTH END OF CELL 1 BY PUMPING INTO CELL 1 SUMP. CONTRACTOR TO CAREFULLY EXCAVATE EXISITNG COAL ASH, WHERE ENCOUNTERED, FOR A DISTANCE OF 15 FEET FROM INSIDE TOE OF EXISTING INTERMEDIATE BERM. EXCAVATION TO BE CONDUCTED IN THE PRESENCE OF THE ENGINEER OR HIS REPRESENATIVE.
6. CONTRACTOR SHALL FLUSH EXISTING 12" HDPE HEADER PIPE FROM THE CELL 1 SUMP BEFORE OPENING THE CELL 2 SUMP. CONTRACTOR SHALL FLUSH HEADER FROM THE CELL 2 SUMP AT THE COMPLETION OF GEOMEMBRANE INSTALLATION

DEMOLITION ITEMS

7. CONTRACTOR TO REMOVE CELL 1 RISERS (THREE) USING EXTREME CARE TO PROTECT GEOMEMBRANE AND SYNTHETIC DRAINAGE MEDIA. ANY DAMAGE SHALL BE REPAIRED BY THE CONTRACTOR AT NO COST TO THE OWNER. REPLACE RISER AT SUMP #1 WITH NEW PREFABRICATED RISER SHOWN ON DETAIL 2/G6. REPLACE AGGREGATE AROUND RISER.

(4) CONTRACTOR TO REMOVE EXISTING 18" DIA HDPE PIPE FROM CELL 1 AND REPLACE WITH TOE DRAIN AS SHOWN ON DETAIL 3/G6. OWNER SHALL PROVIDE 6"DIA SDR 17 HDPE PIPE TO BE USED FOR THE NEW CELL 1 TOE DRAIN AND INSTALLED BY THE CONTRACTOR.

CONTRACTOR TO STORE PIPE AND RISERS AT LOCATIONS DESIGNATED BY THE OWNER. IT IS THE INTENTION TO REUSE 18" HDPE PIPE. RISERS MAY BE CUT OR DRILLED TO FACILITATE SAFE REMOVAL. CONTRACTOR SHALL SUBMIT DEMOLITION PLAN FOR ENGINEER'S REVIEW PRIOR TO REMOVAL OF RISERS, PIPE OR AGGREGATE IN CELL 1.

LEGEND

- MW-4 — DENOTES EXISTING PERMANENT MONITORING WELL LOCATION AND IDENTIFYING NUMBER
- B-14 — DENOTES EXISTING TEMPORARY PIEZOMETER AND IDENTIFYING NUMBER
- MW-14 — DENOTES EXISITNG TEMPORARY DOWNSTREAM MONITORING WELL AND IDENTIFYING NUMBER
- DENOTES SURVEYING BENCHMARK
- 330 — EXISTING INDEX ELEVATION CONTOUR
- EXISTING INTERMEDIATE ELEVATION CONTOUR
- MW-17 — DENOTES PROPOSED TEMPORARY DOWNSTREAM MONITORING WELL AND IDENTIFYING NUMBER

PLAN

1"=60'-0"

RECORD DRAWING

NO.	ISSUED FOR	DATE	BY
5	RECORD DRAWING	4/00	
4	REBID CONSTRUCTION	7/98	DLC
3	CONSTRUCTION	6/96	DLC
2	REVISED TOPOGRAPHY	5/96	DLC
1	REGULATORY APPROVAL	9/95	DLC

DESIGNED BEK
DRAWN PWS
CHECKED RCB
PROJ.ENGR. JAB
APPROVED

NORTH CAROLINA PROFESSIONAL SEAL 8397 ENGINEER DONALD L. CORDELL

NORTH CAROLINA PROFESSIONAL SEAL 19391 ENGINEER JOHN A. BOVE 4/3/00

HAZEN AND SAWYER
Environmental Engineers & Scientists
RALEIGH, NORTH CAROLINA

HALIFAX COUNTY, NORTH CAROLINA
SOLID WASTE DEPARTMENT

ASH MONOFILL - CELL 2
CONSTRUCTION DRAWINGS

CELL 2 – GEOMEMBRANE
GRADING PLAN

THE SCALE BAR SHOWN BELOW MEASURES ONE INCH LONG ON THE ORIGINAL DRAWING.

DATE JUNE 1996
H & S JOB NUMBER 3786
CONTRACT NUMBER 1
DRAWING NUMBER G3
SHEET 4 OF 11

PLOT DATE: 05/07/99 & 3:39am 1:1 FILE=C2003.dwg by PWSELSKER XREF=m:\3786AR\BASE\CBL, m:\3786AR\BASE\CL2-Dw-rlb, m:\3786AR\BASE\SP-rlb, m:\3786AR\BASE\3786Sb.dwg

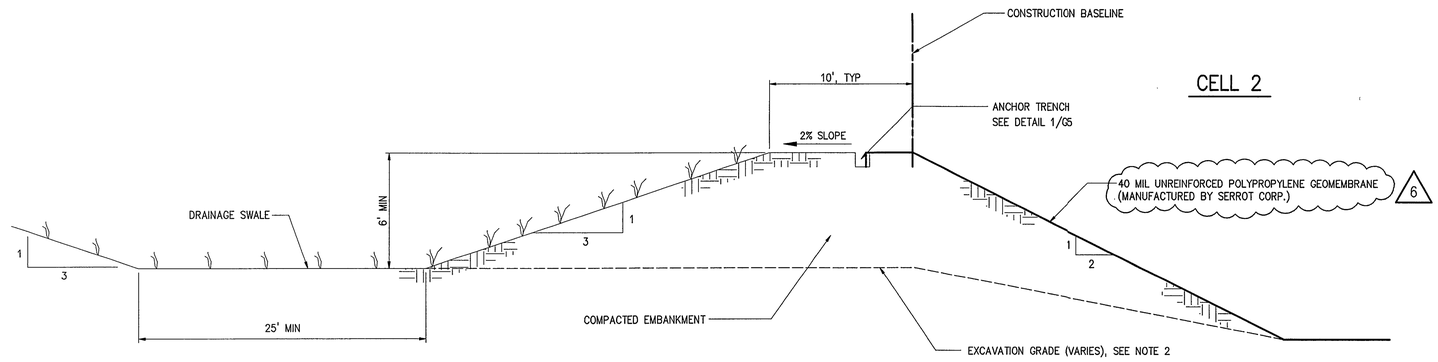

PERIMETER BERM CROSS-SECTION (TYP)

SECTION A/G3
1"=5'-0"

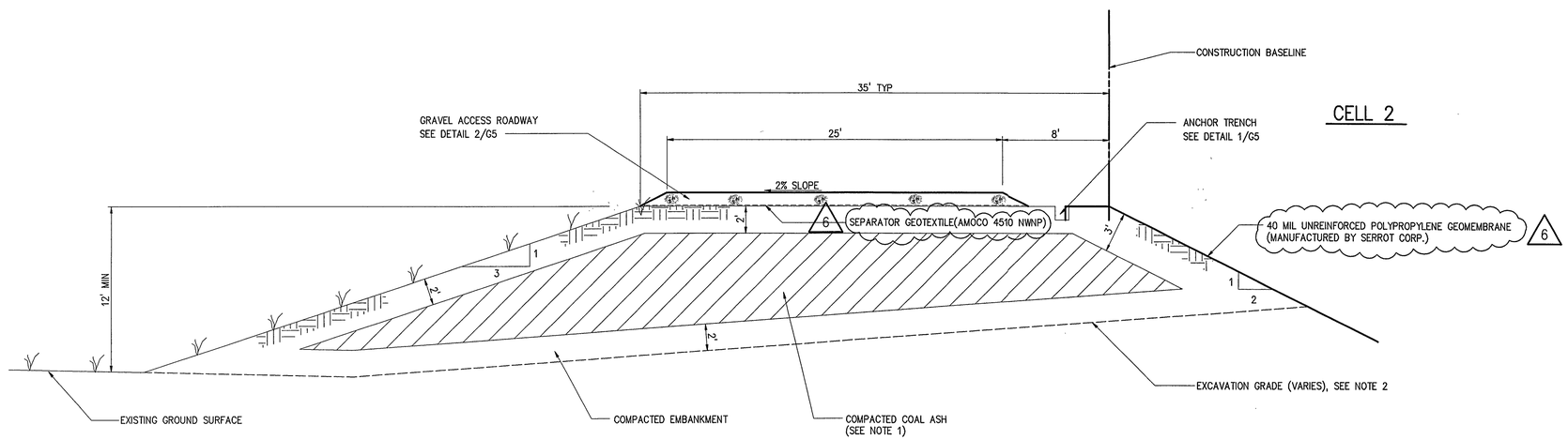

ACCESS ROAD PERIMETER BERM CROSS-SECTION (TYP)

SECTION B/G3
1"=5'-0"

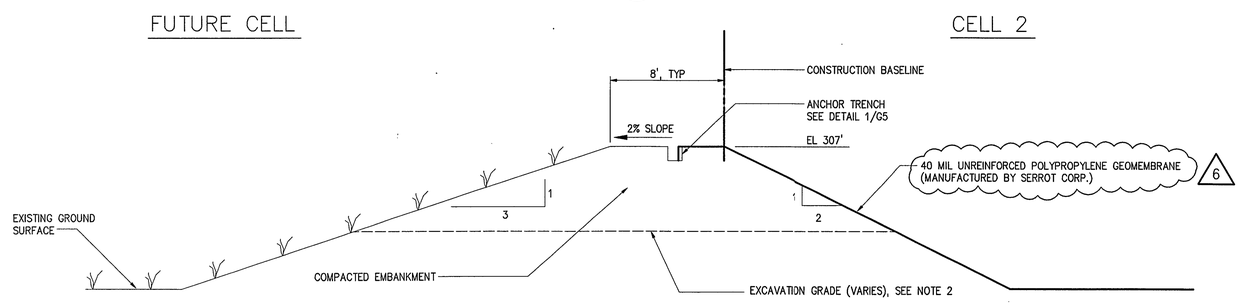

SOUTH INTERMEDIATE BERM CROSS-SECTION (TYP)

SECTION C/G3
1"=5'-0"

NOTES:

1. COMPACTED COAL ASH SHALL BE USED AS COMPACTED EMBANKMENT IN THE ACCESS ROAD PERIMETER BERM. COAL ASH PROVIDED BY THE OWNER FOR PLACEMENT AND COMPACTED BY THE CONTRACTOR. THE COAL ASH MUST BE ENCAPSULATED WITH AT LEAST TWO FEET OF COMPACTED EMBANKMENT SOIL ON ALL SIDES AND MUST HAVE AT LEAST THREE FEET OF COMPACTED EMBANKMENT SOIL BETWEEN THE COAL ASH AND THE MONOFILL GEOMEMBRANE, SEE SECTION 02200, EARTHWORK, OF THE SPECIFICATIONS.
2. CONTRACTOR SHALL REMOVE ALL TOPSOIL, ORGANIC DEBRIS OR SOFT SOILS FROM BERM CONSTRUCTION AREAS. EXPOSED SUBGRADE SHALL BE PROOFROLLED IN ACCORDANCE WITH SECTION 02200, EARTHWORK, OF THE SPECIFICATIONS.

6 3. LIMITS OF COAL ASH USED IN BERM CONSTRUCTION WERE SURVEYED BY CONTRACTOR AND ARE PROVIDED IN RECORD DOCUMENTATION REPORT.

RECORD DRAWING

NO.	ISSUED FOR	DATE	BY
6	RECORD DRAWING	4/00	
5	REBID CONSTRUCTION	7/98	DLC
4	CONSTRUCTION	6/96	DLC
3	REVISED TOPOGRAPHY	5/96	DLC
2	REGULATORY COMMENTS	2/96	DLC
1	REGULATORY APPROVAL	9/95	DLC

DESIGNED BEK
DRAWN PWS
CHECKED RCB
PROJ.ENGR. JAB
APPROVED

NORTH CAROLINA PROFESSIONAL SEAL 8397 ENGINEER DONALD L. CORDELL

NORTH CAROLINA PROFESSIONAL SEAL 8381 ENGINEER JOHN A. BOVE 4/3/00

HAZEN AND SAWYER
Environmental Engineers & Scientists
RALEIGH, NORTH CAROLINA

HALIFAX COUNTY, NORTH CAROLINA
SOLID WASTE DEPARTMENT

ASH MONOFILL - CELL 2
CONSTRUCTION DRAWINGS

BERM DETAILS

THE SCALE BAR SHOWN BELOW MEASURES ONE INCH LONG ON THE ORIGINAL DRAWING.

DATE JUNE 1996
H & S JOB NUMBER 3786
CONTRACT NUMBER 1
DRAWING NUMBER G4
SHEET 5 OF 11

PLOT DATE: 04/03/00 11:14am ELE= 61.13786;VERV;VERV;G04 by: BERMAER WIDE=ACEAL\SP-G-04, DETAIL\SP-G-08, DETAIL\SP-G-09, DETAIL\SP-G-10, MPO\37860a.dwg

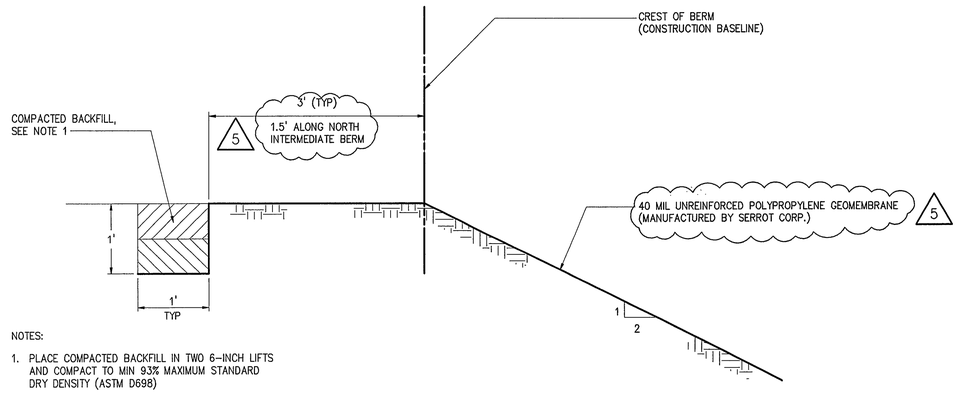

NOTES:

1. PLACE COMPACTED BACKFILL IN TWO 6-INCH LIFTS AND COMPACT TO MIN 93% MAXIMUM STANDARD DRY DENSITY (ASTM D698)
2. CONTRACTOR TO CONSTRUCT "DAYLIGHT TRENCHES" TO PREVENT ANCHOR TRENCHES FROM FILLING WITH WATER DURING GEOMEMBRANE INSTALLATION

GEOMEMBRANE ANCHOR TRENCH
(FOR ALL BERMS)

DETAIL	1
1" = 1'	G4

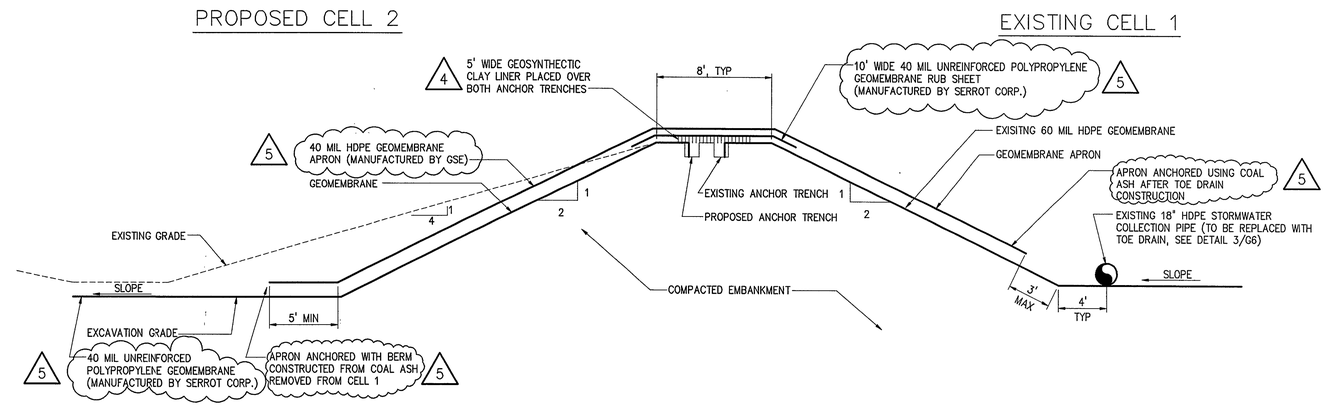

NORTH INTERMEDIATE BERM CROSS-SECTION (TYP)

SECTION E/G3
1"=5'-0"

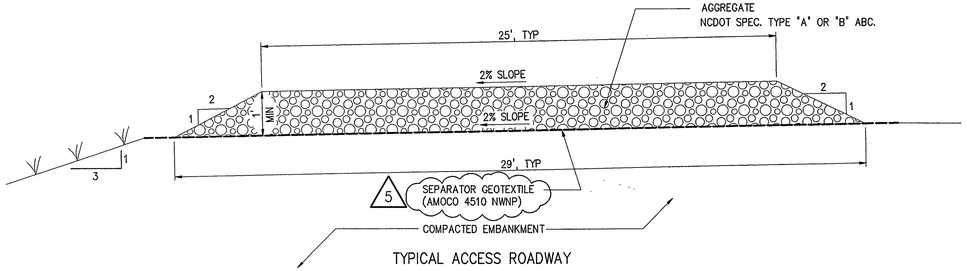

TYPICAL ACCESS ROADWAY

DETAIL	2
NTS	G4

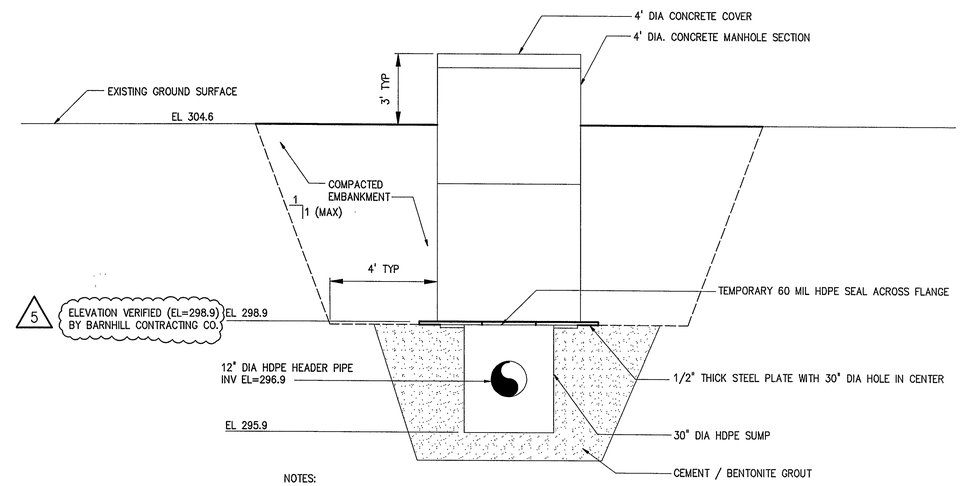

NOTES:

1. CONTRACTOR SHALL BE RESPONSIBLE FOR VERIFYING LOCATION OF SUMP AND PROTECTIVE COVER AND FOR ANY DAMAGE TO EXISTING SUMP AND GRAVITY LINE RESULTING FROM CONTRACTORS ACTIVITIES.
2. PROTECT SUMP AREA FROM RUN-ON AND EROSION DURING CONSTRUCTION.
3. CONTRACTOR TO REMOVE STEEL PLATE AND HDPE SEAL IMMEDIATELY BEFORE GEOMEMBRANE INSTALLATION.
4. CONTRACTOR TO REPAIR SURFACE OF CEMENT/BENTONITE GROUT AS REQUIRED TO RESTORE SMOOTH SUBGRADE SUITABLE FOR GEOMEMBRANE INSTALLATION AS APPROVED BY THE ENGINEER.
5. INSTALL GEOSYNTHETIC CLAY LINER (GCL) OVER PREPARED SUBGRADE A DISTANCE OF 20' AROUND SUMP IMMEDIATELY BEFORE GEOMEMBRANE INSTALLATION. (4)

EXISTING TEMPORARY SUMP PROTECTION
FOR SUMP 2

DETAIL	4
NTS	G2

RECORD DRAWING

NO.	ISSUED FOR	DATE	BY
5	RECORD DRAWING	4/00	
4	REBID CONSTRUCTION	7/98	DLC
3	CONSTRUCTION	6/96	DLC
2	REGULATORY COMMENTS	2/96	DLC
1	REGULATORY APPROVAL	9/95	DLC

DESIGNED BEK
DRAWN PWS
CHECKED RCB
PROJ.ENGR. JAB
APPROVED

NORTH CAROLINA PROFESSIONAL SEAL 8397 ENGINEER DONALD L. CORDELL

NORTH CAROLINA PROFESSIONAL SEAL 8397 ENGINEER JOHN A. BOVE 4/3/00

HAZEN AND SAWYER
Environmental Engineers & Scientists
RALEIGH, NORTH CAROLINA

HALIFAX COUNTY, NORTH CAROLINA
SOLID WASTE DEPARTMENT

ASH MONOFILL - CELL 2
CONSTRUCTION DRAWINGS

MISCELLANEOUS DETAILS

THE SCALE BAR SHOWN BELOW MEASURES ONE INCH LONG ON THE ORIGINAL DRAWING.

DATE JUNE 1996
H & S JOB NUMBER 3786
CONTRACT NUMBER 1
DRAWING NUMBER G5
SHEET 6 OF 11

PLOT DATE 04/07/00 11:18am FILE= M:\3786\USER\DBG003 by PSMAGE RDS=acCTVALUP-G-AC; DETAILUP-G-BF; DETAILUP-G-DE; DETAILUP-G-DG; MISC\3786.dwg

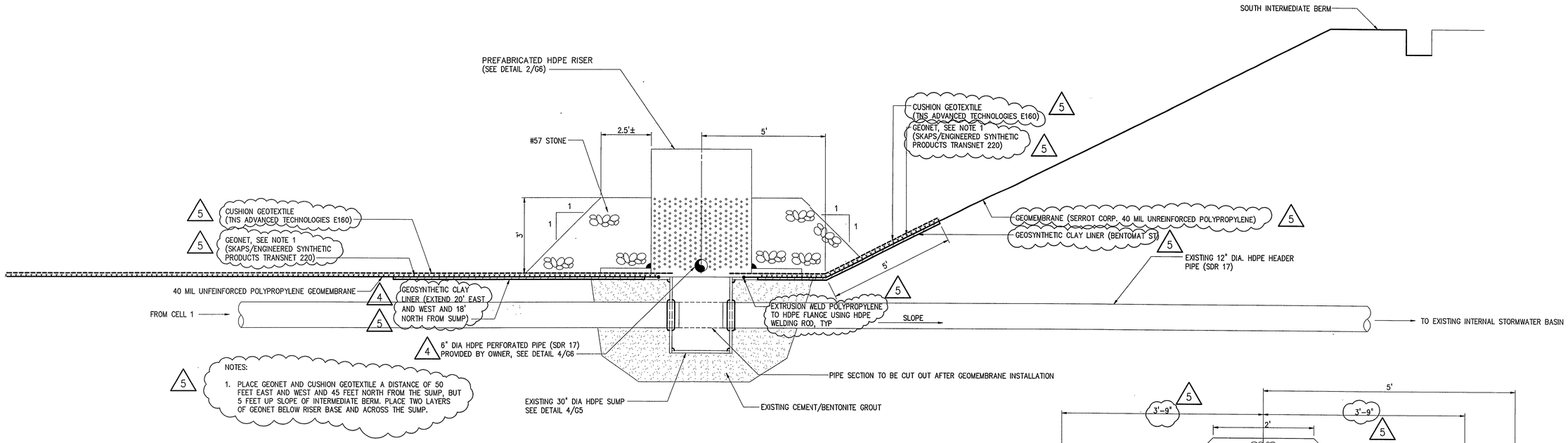

CELL 2 INTERNAL STORMWATER MANAGEMENT SYSTEM
SUMP/RISER ORIENTATION SCHEMATIC

SECTION D/G3
1"=2'-0"

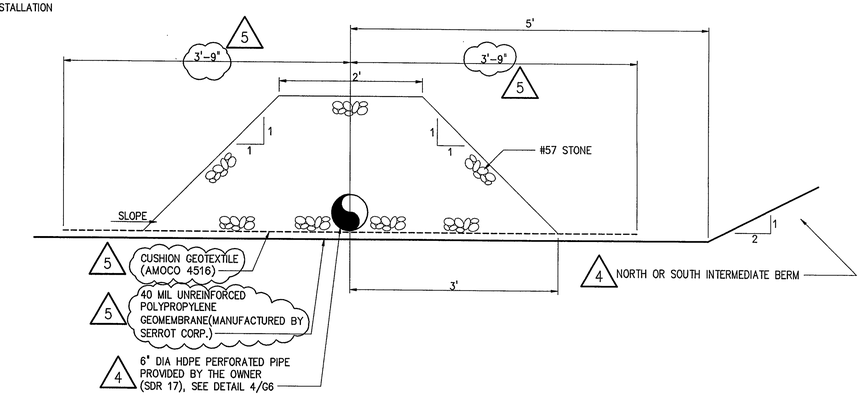

NOTES:
1. THIS DETAIL APPLIES TO BOTH CELL 1 (REPLACEMENT) AND CELL 2.

INTERMEDIATE BERM TOE DRAIN
TYPICAL SECTION

DETAIL 3
1"=1'-0" G3

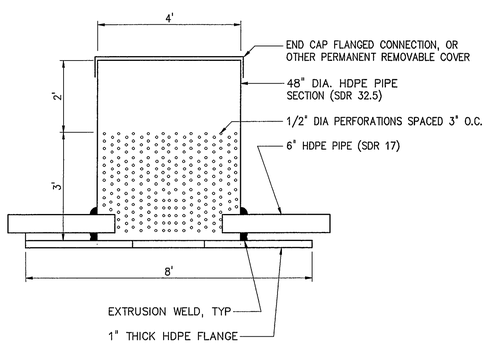

SECTION

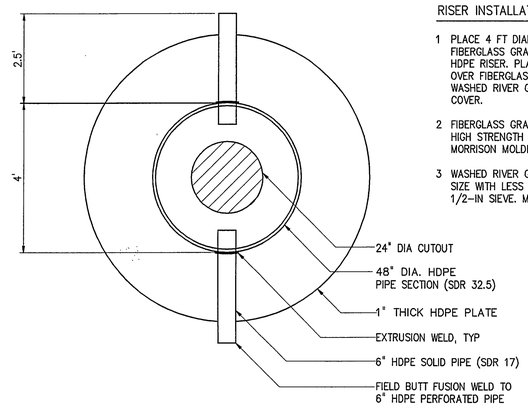

TOP VIEW

RISER INSTALLATION NOTES (BY CONTRACTOR)

1 PLACE 4 FT DIAMETER (NOMINAL) HIGH STRENGTH FIBERGLASS GRATING (BY CONTRACTOR) INSIDE 4' DIA HDPE RISER. PLACE TWO 4 FT DIAMETER LAYERS OF GEONET OVER FIBERGLASS GRATING. FILL HDPE RISER WITH WASHED RIVER GRAVEL TO TOP OF RISER. INSTALL COVER.

2 FIBERGLASS GRATING SHALL BE DURADEK I-6000 HIGH STRENGTH GRATING MANUFACTURED BY MORRISON MOLDED FIBER GLASS CO., BRISTOL VA.

3 WASHED RIVER GRAVEL SHALL BE NOMINAL 3/4-IN SIZE WITH LESS THAN 5% BY WEIGHT PASSING THE 1/2-IN SIEVE. MAXIMUM SIZE SHALL BE 2-IN.

NOTE:
4 OWNER HAS PURCHASED RISERS AND THEY ARE STORED ONSITE. CONTRACTOR TO INSTALL RISERS, GRATING, GEONET AND GRAVEL.

PREFABRICATED HDPE RISER FOR CELLS 1 AND 2

DETAIL 2
1"=2' G6

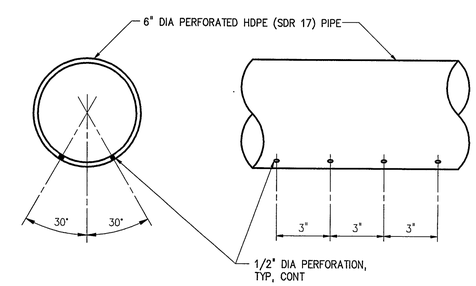

INTERNAL STORMWATER COLLECTION
PIPE PERFORATION (FOR INFORMATION ONLY) 4

DETAIL 4
NTS G6

RECORD DRAWING

NO.	ISSUED FOR	DATE	BY
5	RECORD DRAWING	4/00	
4	REBID CONSTRUCTION	7/98	DLC
3	CONSTRUCTION	6/96	DLC
2	REGULATORY COMMENTS	2/96	DLC
1	REGULATORY APPROVAL	9/95	DLC

DESIGNED BEK
DRAWN PWS
CHECKED RCB
PROJ.ENGR. JAB
APPROVED

NORTH CAROLINA PROFESSIONAL SEAL 8397 ENGINEER DONALD L. CORDELL

NORTH CAROLINA PROFESSIONAL SEAL 10004 ENGINEER JOHN A. BOVE 4/3/00

HAZEN AND SAWYER
Environmental Engineers & Scientists
RALEIGH, NORTH CAROLINA

HALIFAX COUNTY, NORTH CAROLINA
SOLID WASTE DEPARTMENT

ASH MONOFILL - CELL 2
CONSTRUCTION DRAWINGS

MISCELLANEOUS INTERNAL STORMWATER MANAGEMENT SYSTEM DETAILS

THE SCALE BAR SHOWN BELOW MEASURES ONE INCH LONG ON THE ORIGINAL DRAWING.

DATE JUNE 1996
H & S JOB NUMBER 3786
CONTRACT NUMBER 1
DRAWING NUMBER G6
SHEET 7 OF 11

PLOT DATE 04/06/00 11:19am FILE= H:\3786A\100\G06.fm WEFPA=D:\SAS\SP-0-001, D:\SAS\SP-0-002, D:\SAS\SP-0-003, D:\SAS\SP-0-004, D:\SAS\SP-0-005, MDS\3786b.wfa

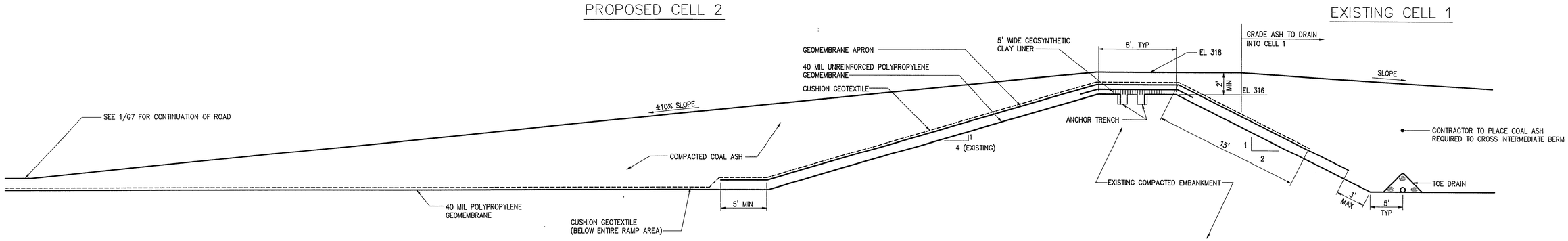

CONSTRUCTION ACCESS RAMP
CROSS-SECTION (TYP)

SECTION F/G7
1"=5'-0"

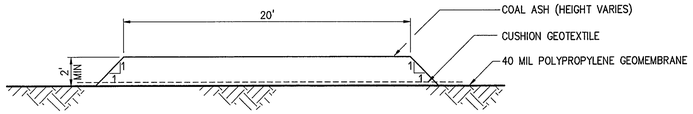

CONSTRUCTION ACCESS ROAD

DETAIL 1/G3
1"=5'-0"

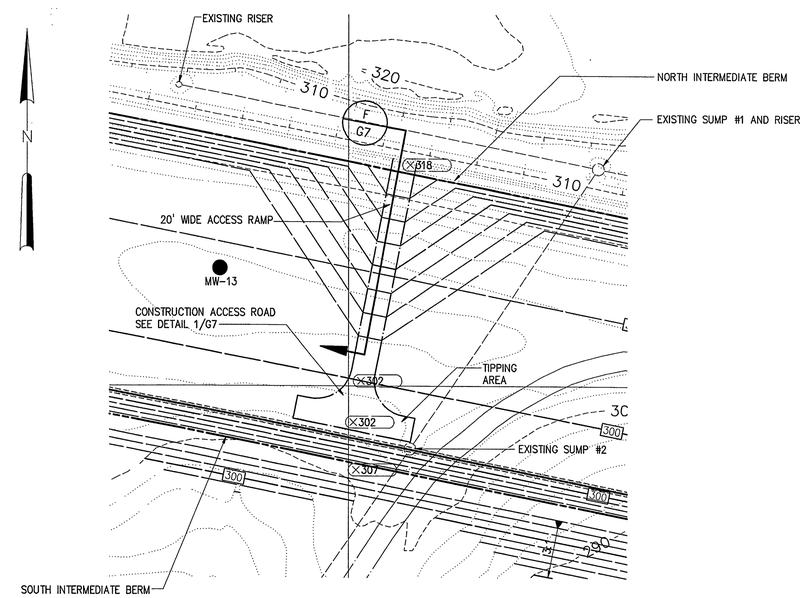

CELL 2 – ACCESS RAMP PLAN
1"=60'-0"

RECORD DRAWING

NO.	ISSUED FOR	DATE	BY
5	RECORD DRAWING	4/00	
4	REBID CONSTRUCTION	7/98	DLC
3	CONSTRUCTION	6/96	DLC
2	REVISED TOPOGRAPHY	5/96	DLC
1	REGULATORY APPROVAL	9/95	DLC

DESIGNED BEK
DRAWN PWS
CHECKED RCB
PROJ.ENGR. JAB
APPROVED

NORTH CAROLINA PROFESSIONAL SEAL 8397 ENGINEER DONALD L. CORDELL

NORTH CAROLINA PROFESSIONAL SEAL 8397 ENGINEER JOHN A. BOVE 4/3/00

HAZEN AND SAWYER
Environmental Engineers & Scientists
RALEIGH, NORTH CAROLINA

HALIFAX COUNTY, NORTH CAROLINA
SOLID WASTE DEPARTMENT

ASH MONOFILL - CELL 2
CONSTRUCTION DRAWINGS

MISCELLANEOUS DETAILS

THE SCALE BAR SHOWN BELOW MEASURES ONE INCH LONG ON THE ORIGINAL DRAWING.

DATE JUNE 1996
H & S JOB NUMBER 3786
CONTRACT NUMBER 1
DRAWING NUMBER G7
SHEET 8 OF 11

PLOT DATE 10/11/99 2:50pm S1 FILE=D:\DOCS.dwg by PWS\CURDER XREF=w:\3786AW\MASTCOL, w:\3786AW\MASTCL2, w:\3786AW\SASTL3P=XB, w:\3786AW\DETAL3P=D, w:\3786AW\DETAL3P=C-2M, w:\3786AW\MISC\3786Bl.dwg

NOTES:

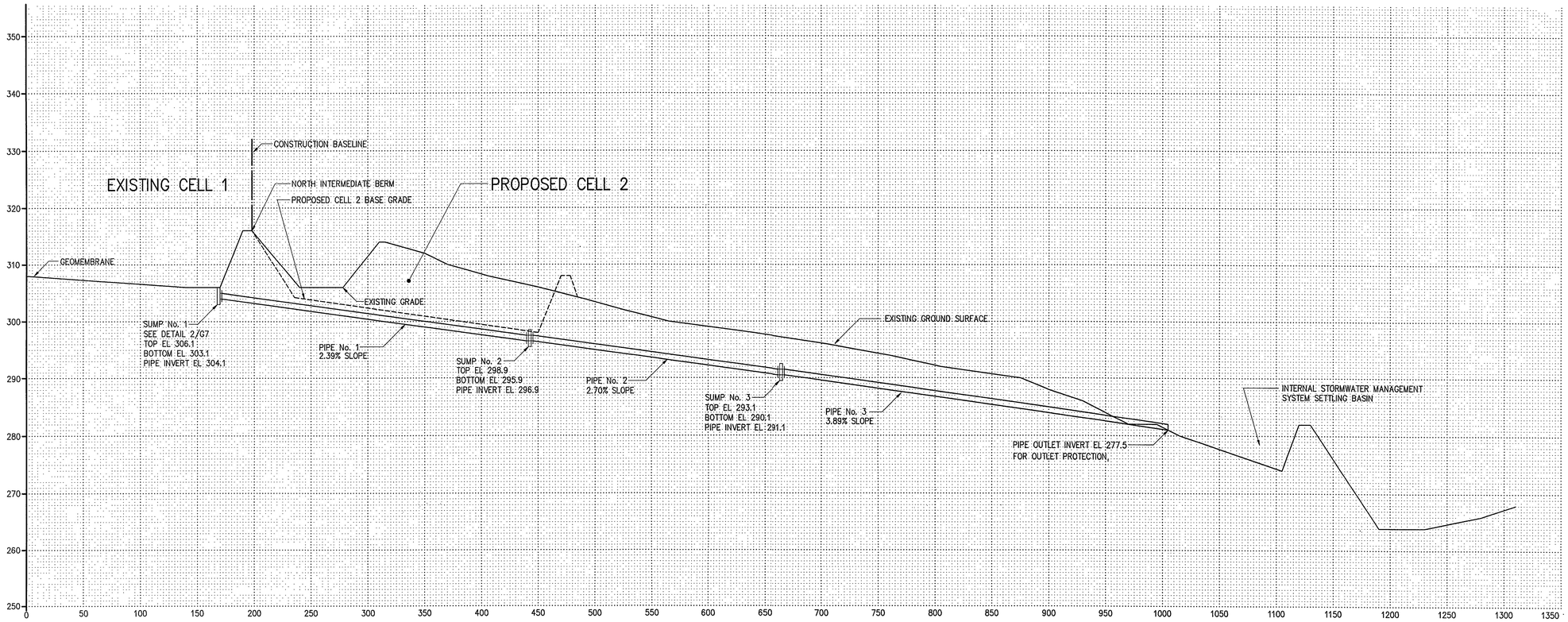

HEADER PIPE PROFILE (FOR INFORMATION ONLY)

SCALES
HORIZ 1"=50'
VERT 1"=10'

RECORD DRAWING

NO.	ISSUED FOR	DATE	BY
5	RECORD DRAWING	4/00	
4	REBID CONSTRUCTION	7/98	DLC
3	CONSTRUCTION	6/96	DLC
2	REGULATORY COMMENTS	2/96	DLC
1	REGULATORY APPROVAL	9/95	DLC

DESIGNED BEK
DRAWN PWS
CHECKED RCB
PROJ.ENGR. JAB
APPROVED

NORTH CAROLINA PROFESSIONAL SEAL 8397 ENGINEER DONALD L. CORDELL

NORTH CAROLINA PROFESSIONAL SEAL 18391 ENGINEER JOHN A. BOVE 4/3/00

HAZEN AND SAWYER
Environmental Engineers & Scientists
RALEIGH, NORTH CAROLINA

HALIFAX COUNTY, NORTH CAROLINA
SOLID WASTE DEPARTMENT

ASH MONOFILL - CELL 2
CONSTRUCTION DRAWINGS

INTERNAL STORMWATER MANAGEMENT SYSTEM
HEADER PIPE PROFILE

THE SCALE BAR SHOWN BELOW MEASURES ONE INCH LONG ON THE ORIGINAL DRAWING.

DATE JUNE 1996
H & S JOB NUMBER 3786
CONTRACT NUMBER 1
DRAWING NUMBER G8
SHEET 9 OF 11

PLOT DATE 04/01/00 11:23am FILE= H:\3786\A\SDV\SDV0008 by RDRAKER WRITE=BASE\SP-G-004.dwg BASE\DRG. MISC\3786Title.dwg

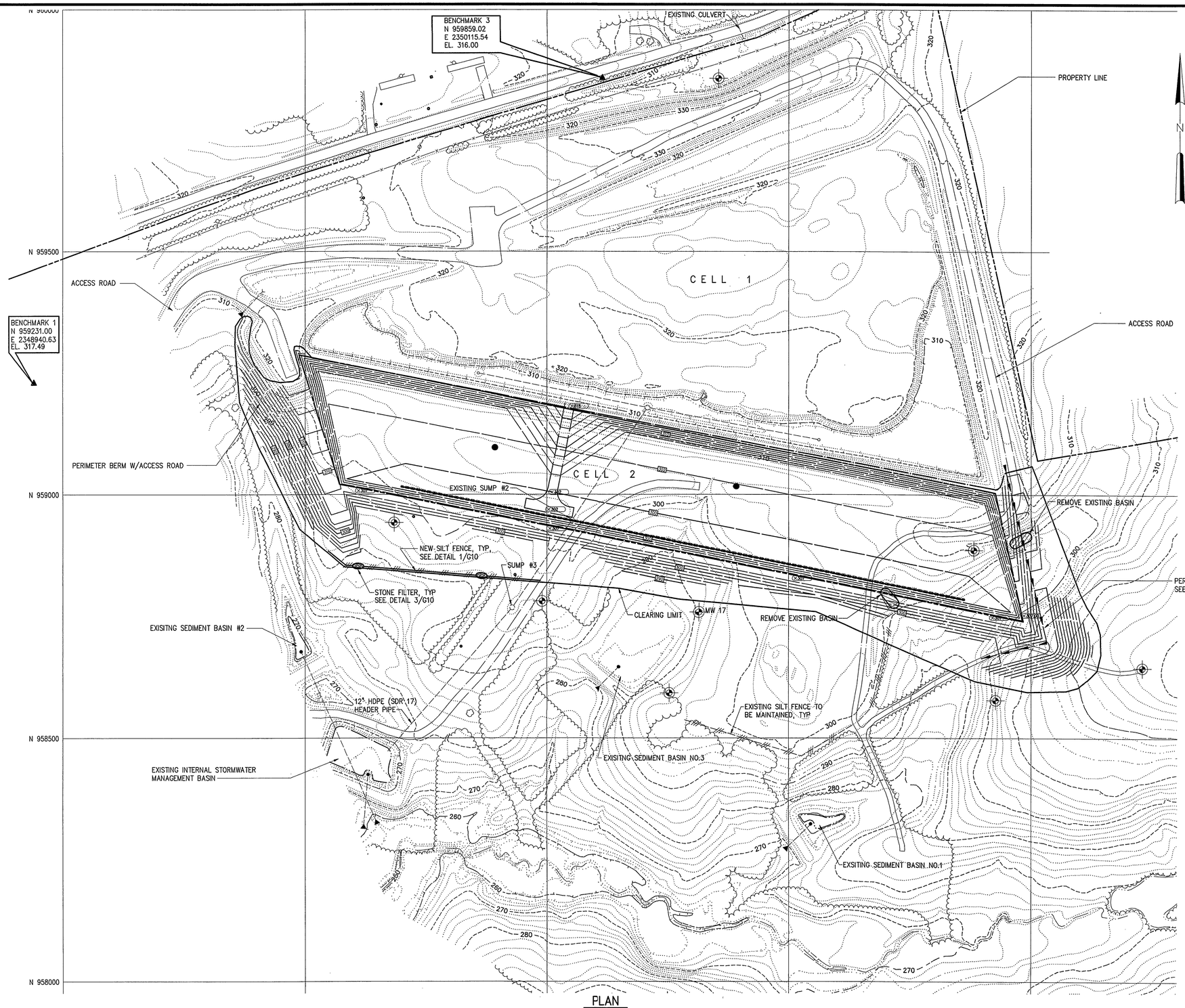

PLAN

1"=100'-0"

NOTES:

1. EXISTING TOPOGRAPHY COMPILED BY PIEDMONT AERIAL SURVEYS, GREENSBORO, NC FROM PHOTOGRAPHY DATED 2/26/96.
2. CELL 1 IS CURRENTLY ACTIVE CELL, THEREFORE, CONTOURS SHOWN FOR CELL 1 DO NOT REFLECT CURRENT CONDITIONS.
3. CONTRACTOR SHALL CLEAN OUT EXISTING SEDIMENT BASINS NO. 1, NO. 2 AND NO. 3 AND RESTORE RISER/BARREL AND DRAINAGE STONE AS REQUIRED.
4. ALL EROSION CONTROL DEVICES SHALL BE IN PLACE BEFORE OR AS SOON AS PRACTICAL AFTER ANY LAND CLEARING OR CONSTRUCTION BEGINS.
5. CONTRACTOR SHALL MAINTAIN ALL EXISTING SILT FENCES IN THE CONSTRUCTION AREA.
6. ALL EROSION CONTROL DEVICES SHALL BE MAINTAINED IN ACCORDANCE WITH THE SPECIFICATIONS AND SHALL REMAIN IN SERVICE UNTIL ALL CONSTRUCTION AREAS HAVE BEEN STABILIZED.

RECORD DRAWING

NO.	ISSUED FOR	DATE	BY
5	RECORD DRAWING	4/00	
4	REBID CONSTRUCTION	7/98	DLC
3	CONSTRUCTION	6/96	DLC
2	REGULATORY COMMENTS	2/96	DLC
1	REGULATORY APPROVAL	9/95	DLC

DESIGNED BEK
DRAWN PWS
CHECKED RCB
PROJ.ENGR. JAB
APPROVED

NORTH CAROLINA PROFESSIONAL SEAL 8397 ENGINEER DONALD L. CORDELL

NORTH CAROLINA PROFESSIONAL SEAL ENGINEER JOHN A. BOVE 4/3/00

HAZEN AND SAWYER
Environmental Engineers & Scientists
RALEIGH, NORTH CAROLINA

HALIFAX COUNTY, NORTH CAROLINA
SOLID WASTE DEPARTMENT

ASH MONOFILL - CELL 2
CONSTRUCTION DRAWINGS

CELL 2 – EROSION AND SEDIMENTATION CONTROL PLAN

THE SCALE BAR SHOWN BELOW MEASURES ONE INCH LONG ON THE ORIGINAL DRAWING.

DATE JUNE 1996
H & S JOB NUMBER 3786
CONTRACT NUMBER 1
DRAWING NUMBER G9
SHEET 10 OF 11

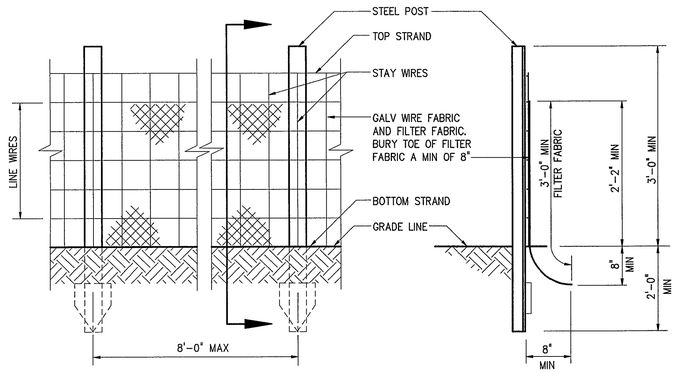

ELEVATION
SILT FENCE

SECTION
SILT FENCE

NOTE:
1. EXTRA STRENGTH FILTER FABRIC (AS APPROVED BY ENGINEER) WITH 6'-0" POST SPACING DOES NOT REQUIRE MESH SUPPORT FENCE.
2. FILTER FABRIC SHALL BE WIRED DIRECTLY TO POST.

DETAIL 1
NTS G9

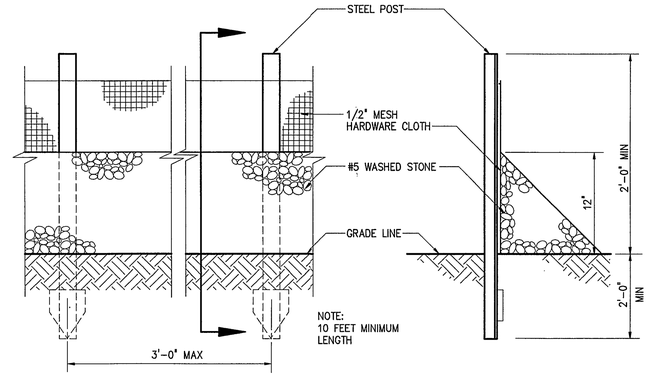

ELEVATION
STONE FILTER

SECTION
STONE FILTER

DETAIL 3
NTS G9

APPLICATION RATES IN POUNDS/ACRE							
SEED*** MIXTURE	PLANTING SEASON	LIME*	SEED	FERTILIZER**	WOOD MULCH	TOPDRESSING*	COMMENTS
P	FEB 1–MAY 31 SEPT 1–NOV 30	4000	150	1000	1500	500 OF 10–20–20 60 OF NITROGEN	PREFERRED PLANTING SEASONS ARE SEPT 15–OCT 15 AND FEB 15–APRIL 30. ADD 25#/ACRE SUDANGRASS DURING MAY. ADD 25#/ACRE HYBRID RYE DURING NOV.
TW	DEC 1–JAN 31	N/A	100	400	500	N/A	OVER SEED WITH TYPE P SEED MIXTURE DURING NEXT PLANTING SEASON
TS	JUNE 1–AUG 31	N/A	35	400	500	N/A	OVER SEED WITH TYPE P SEED MIXTURE DURING NEXT PLANTING SEASON

* APPLICATION RATES AND/OR CHEMICAL ANALYSIS SHALL BE CONFIRMED OR ESTABLISHED BY SOIL TEST.

** FERTILIZER SHALL BE 10–20–20 ANALYSIS. UPON WRITTEN APPROVAL OF THE HALIFAX COUNTY PUBLIC WORKS DEPARTMENT. A DIFFERENT ANALYSIS OF FERTILIZER MAY BE USED PROVIDED THE 1–2–2 RATIO IS MAINTAINED AND THE RATE OF APPLICATION ADJUSTED TO PROVIDE THE SAME AMOUNT OF PLANT FOOD AS A 10–20–20 ANALYSIS.

*** SEED MIXTURES TO BE USED ON THE PROJECT SHALL BE AS FOLLOWS:

P – PERMANENT SEEDING
150#/ACRE KENTUCKY 31 TALL FESCUE

TW – TEMPORARY WINTER SEEDING
100#/ACRE HYBRID RYE

TS – TEMPORARY SUMMER SEEDING
35#/ACRE PEARL OR BROWN TOP MILLET

ON CUT AND FILL SLOPES 2H:1V OR STEEPER, ADD 30#/ACRE SERICEA LESPEDEZA TO TYPE P SEED MIXTURE.
USE SCARIFIED SEED FOR SPRING PLANTINGS AND UNSCARIFIED FOR FALL PLANTINGS.

SEEDING SCHEDULE
HALIFAX COUNTY ASH MONOFILL CELL–2

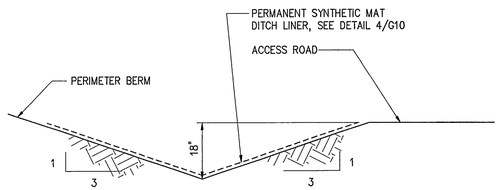

PERMANENT LINED DITCH

DETAIL 2
NTS G9

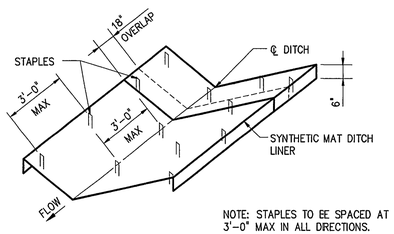

NOTE: STAPLES TO BE SPACED AT 3'-0" MAX IN ALL DIRECTIONS.

PERSPECTIVE VIEW

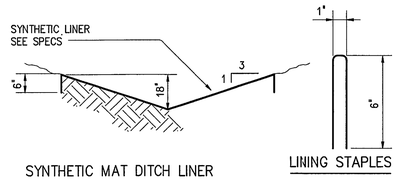

SYNTHETIC MAT DITCH LINER

LINING STAPLES

PERMANENT SYNTHETIC MAT DITCH LINER INSTALLATION

DETAIL 4
NTS G10

RECORD DRAWING

NO.	ISSUED FOR	DATE	BY
5	RECORD DRAWING	4/00	
4	REBID CONSTRUCTION	7/98	DLC
3	CONSTRUCTION	6/96	DLC
2	REGULATORY COMMENTS	2/96	DLC
1	REGULATORY APPROVAL	9/95	DLC

DESIGNED BEK
DRAWN PWS
CHECKED RCB
PROJ.ENGR. JAB
APPROVED

NORTH CAROLINA PROFESSIONAL SEAL 8397 ENGINEER DONALD L. CORDELL

NORTH CAROLINA PROFESSIONAL SEAL ENGINEER JOHN A. BOWE 4/3/00

HAZEN AND SAWYER
Environmental Engineers & Scientists
RALEIGH, NORTH CAROLINA

HALIFAX COUNTY, NORTH CAROLINA
SOLID WASTE DEPARTMENT

ASH MONOFILL - CELL 2
CONSTRUCTION DRAWINGS

EROSION AND SEDIMENT CONTROL
SECTIONS AND DETAILS

THE SCALE BAR SHOWN BELOW MEASURES ONE INCH LONG ON THE ORIGINAL DRAWING.

DATE JUNE 1996
H & S JOB NUMBER 3786
CONTRACT NUMBER 1
DRAWING NUMBER G10
SHEET 11 OF 11