SW-11-021-6 4204 19930512 P-0

Permit:	42-04
Name:	Halifax County Ashe Monofill, PTC
County:	Halifax
Shipped Date:	
Box:	SW-11-021
Document Type:	Other (O)
Document Date:	5/12/1993
Division:	Waste Management (WM)
Sub-Division:	Solid Waste (SW)
Document Category:	Facility (F)
Document Group:	Authorization or Permit (P)
Description:	Map: . Maps in Roll:

HALIFAX COUNTY ASH-MONOFILL CONSTRUCTION PLANS MARCH 1992

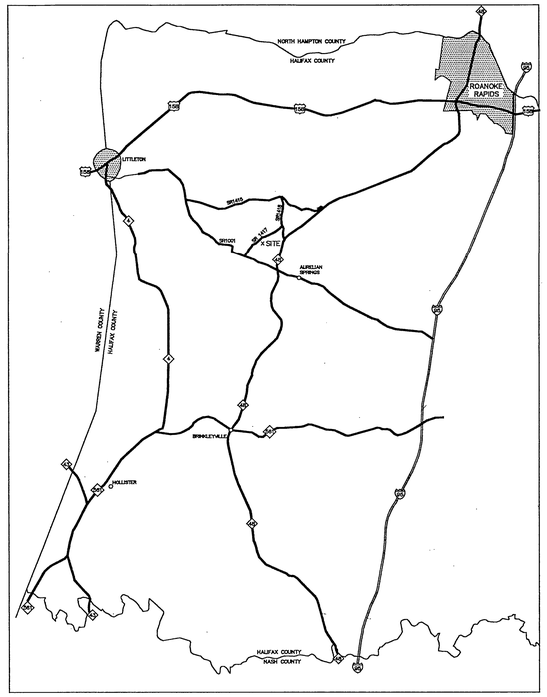

DRAWING LIST

SHEET NUMBER	TITLE
1	EXISTING SITE CONDITIONS
2	SITE CONDITIONS AFTER BORROW EXCAVATION
3	BERM LAYOUT INFORMATION
4	OVERALL EXCAVATION PLAN
5	OPERATIONAL COVER PLAN
6	EXCAVATION PLAN CELL 1
7	PHASING PLAN CELL 1
8	INTERIM COVER CELL 1
9	EXCAVATION PLAN CELL 2
10	PHASING PLAN CELL 2
11	INTERIM COVER CELL 2
12	EXCAVATION PLAN CELL 3
13	PHASING PLAN CELL 3
14	INTERIM COVER CELL 3
15	EXCAVATION PLAN CELL 4
16	PHASING PLAN CELL 4
17	FINAL ELEVATION PLAN
18	SEDIMENTATION AND EROSION CONTROL PLAN
19	SECTIONS A & B
20	SECTIONS C & D
21	SECTIONS E & F
22	SECTIONS G & H
23	DETAILS
24	DETAILS
25	DETAILS
26	DETAILS
27	DETAILS
28	BASIN EXCAVATION PLAN
29	DETAILS

APPROVED
DIVISION OF SOLID WASTE MANAGEMENT
DATE 5/8/93 BY JOH

42-04
Ash Monofill

SOLID WASTE SECTION
APR 27

PREPARED FOR: Halifax County Solid Waste Department
P.O. Box 327
Halifax, N.C. 27839

NORTH CAROLINA PROFESSIONAL SEAL 18995 ENGINEER GREGORY K. RICHARDSON

PREPARED BY: HAZEN AND SAWYER
4011 WestChase Blvd.
Raleigh, N.C. 27607

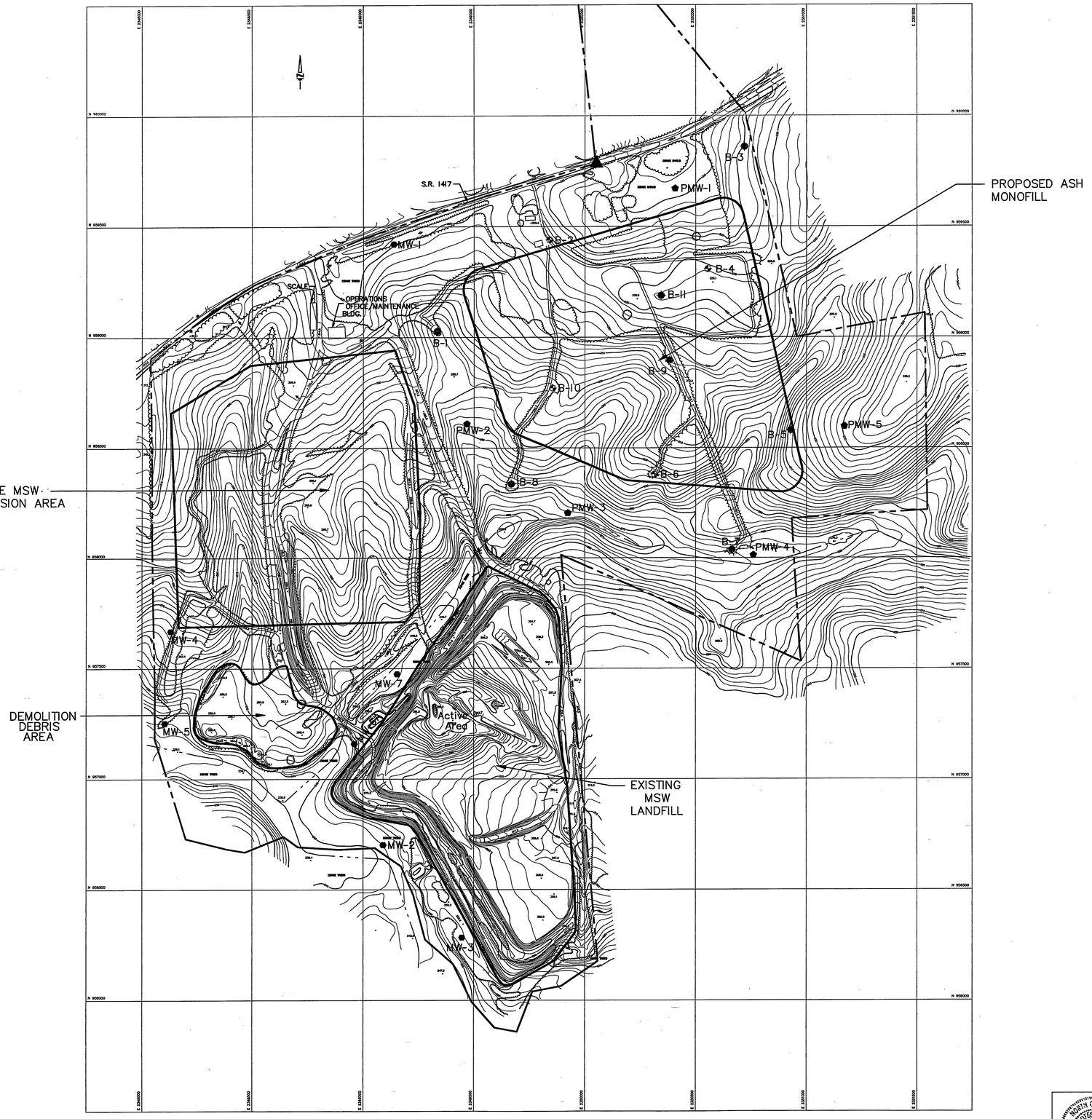

LEGEND

- PROPERTY LINE
- STREAM
- APPROXIMATE DISPOSAL AREA LIMIT
- FACILITY FENCE
- ▲ BENCHMARK
- MW-1 ● EXISTING MONITOR WELL
- PMW-1 ⬟ PROPOSED MONITOR WELL
- B-10 ⊕ SOIL BORINGS PERFORMED 1991 (BY ENSCI CORP.)
- B-9 ● PIEZOMETER INSTALLED 1991

SCALE: 1"=200'

TOPOGRAPHIC SURVEY BY

PHOTO SCIENCE INC.
GREENSBORO, N.C.

SURVEY FLOWN 2-1-91

NO.	DATE	DESCRIPTION	BY

HAZEN AND SAWYER
Environmental Engineers & Scientists

EXISTING SITE CONDITIONS

HALIFAX COUNTY ASH MONOFILL

SCALE	DRAWN BY:	CHECKED BY:
1" = 200'	JDB	
JOB NO. 3720	DATE: 2-92	PAGE 1

FILENAME: SITEPLAN.DWG

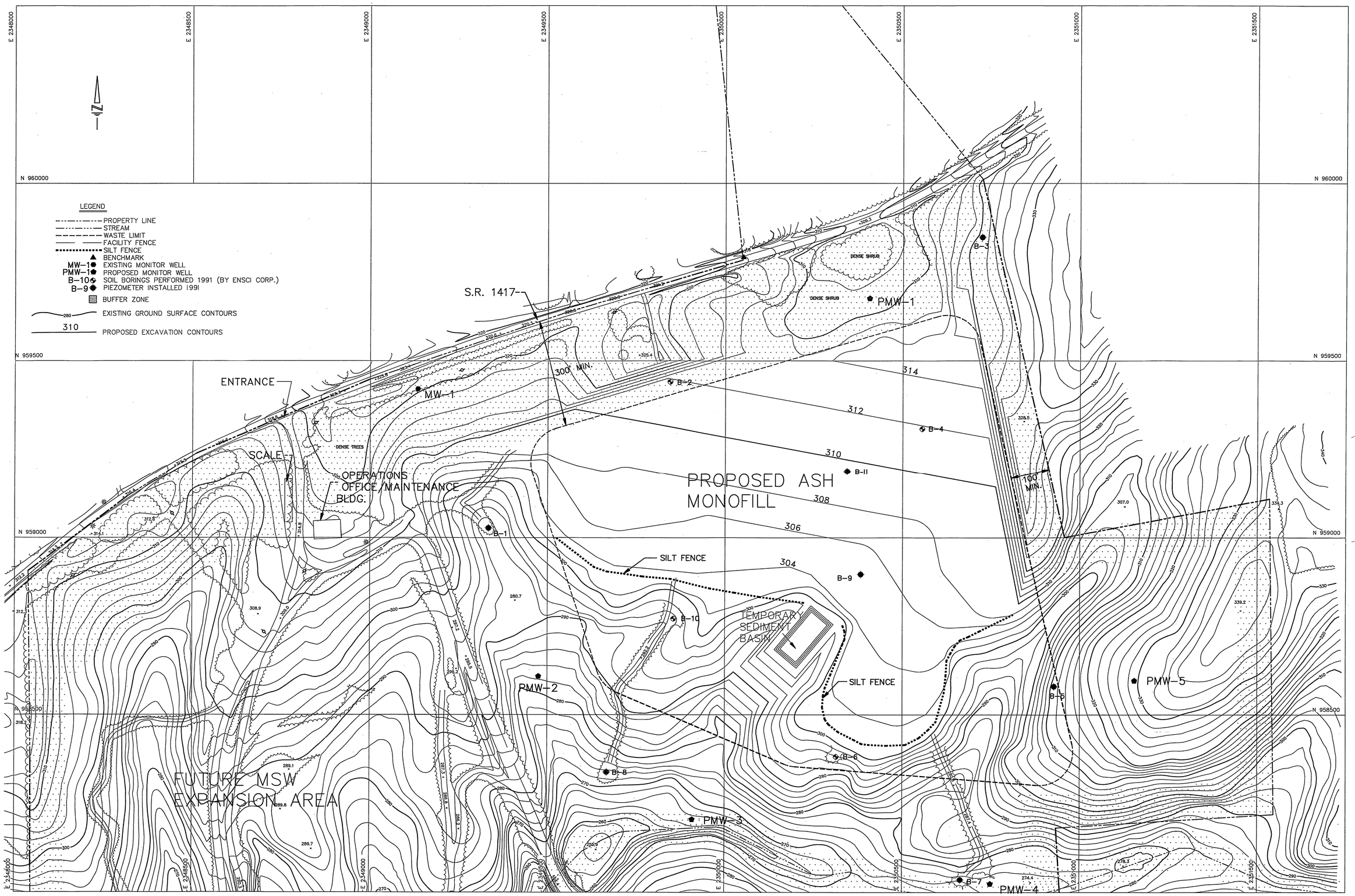

TOPOGRAPHIC SURVEY BY

PHOTO SCIENCE INC.
GREENSBORO, N.C.

SURVEY FLOWN 2-1-91

NOTES: 1. EXCAVATION TO THE ELEVATIONS SHOWN WITHIN THE ASH MONOFILL BOUNDARY TO BE COMPLETED PRIOR TO START OF ASH MONOFILL CONSTRUCTION.

2. DRAWING DEPICTS PROPOSED BORROW EXCAVATION ELEVATIONS. ACTUAL ELEVATIONS WILL BE DETERMINED IMMEDIATELY PRIOR TO CONSTRUCTION OF CELL 1.

0 50 100 200 300 400 500
25 75

SCALE: 1"=100'

NORTH CAROLINA PROFESSIONAL SEAL 6-1-1995 ENGINEER GREGORY N. RICHARDSON

NO.	DATE	DESCRIPTION	BY

HAZEN AND SAWYER
Environmental Engineers & Scientists

SITE CONDITIONS AFTER BORROW EXCAVATION

HALIFAX COUNTY ASH MONFILL

SCALE 1"=100'	DRAWN BY: JDB	CHECKED BY: GN
JOB NO. 3720	DATE: 2-92	PAGE 2 OF 29

FILENAME: HBORROW.DWG

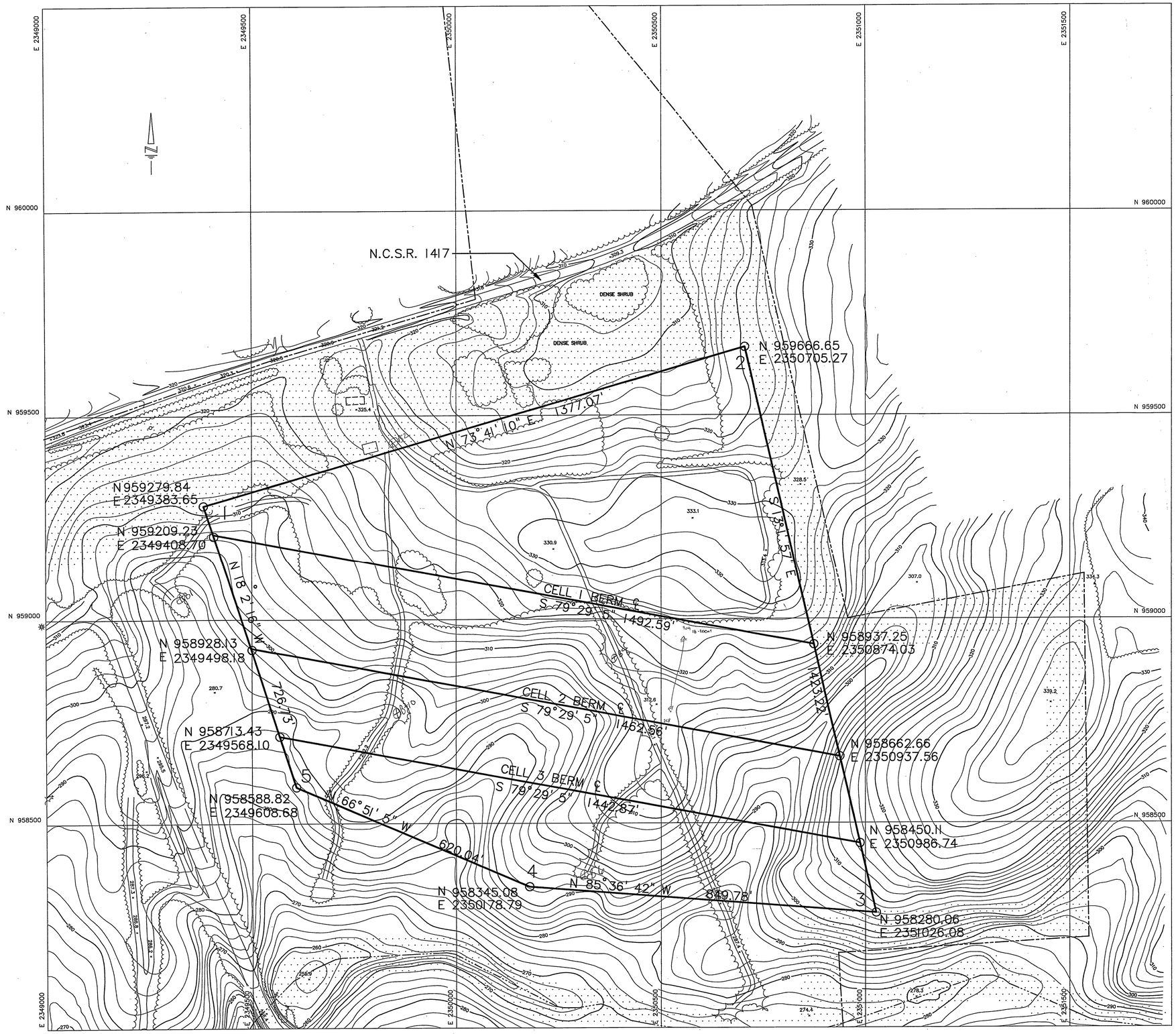

CENTERLINE OF BERM
BUFFER ZONE

CURVE DATA TABLE

CURVE	R	Δ	T	PI	
				N	E
1	105'	91.72	105.20	959279.84	2349383.65
2	105'	94.03	112.66	959666.65	2350705.27
3	105'	73.33	78.16	958280.06	2351026.08
4	105'	18.76	17.35	958345.08	2350178.79
5	105'	48.81	47.64	958588.82	2349608.68

0 50 100 200 300 400 500
25 75
SCALE: 1"=100'

TOPOGRAPHIC SURVEY BY
PSI
PHOTO SCIENCE INC.
GREENSBORO, N.C.
SURVEY FLOWN 2-1-91

NORTH CAROLINA PROFESSIONAL SEAL 8895 ENGINEER JERRY A. RICHARDSON

NO.	DATE	DESCRIPTION	BY

HAZEN AND SAWYER
Environmental Engineers & Scientists

BERM LAYOUT INFORMATION

HALIFAX COUNTY ASH MONOFILL

SCALE 1"=100'	DRAWN BY: JDB	CHECKED BY: GNR
JOB NO. 3720	DATE: 2-92	PAGE 3 OF 29

FILENAME: LAYOUT.DWG

LEGEND

- PROPERTY LINE
- STREAM
- 280 EXISTING GROUND SURFACE CONTOURS
- 312 PROPOSED EARTHWORK CONTOURS
- BUFFER ZONE

NOTES:
1. CONTOURS DENOTE SYNTHETIC LINER SUBGRADE ELEVATIONS
2. THIS DRAWING DEPICTS COMPLETE DEVELOPMENT OF THE FACILITY. IT WILL BE CONSTRUCTED IN 4 PHASES AS SET FORTH IN THESE CONTRACT DRAWINGS.
3. ALL PIPING FOR THE INTERNAL STORMWATER SYSTEM WILL BE SMOOTH HDPE
4. FOR DETAILED SUMP LOCATIONS, SEE DETAIL SHEET 24

NOTE: FOR BASIN DETAILS SEE SHEETS 28 AND 29

0 50 100 200 300 400 500
25 75
SCALE: 1"=100'

TOPOGRAPHIC SURVEY BY
PHOTO SCIENCE INC.
GREENSBORO, N.C.
SURVEY FLOWN 2-1-91

NORTH CAROLINA PROFESSIONAL ENGINEER SEAL 8895 GREGORY N. RICHARDSON

NO.	DATE	DESCRIPTION	BY

HAZEN AND SAWYER
Environmental Engineers & Scientists

OVERALL EXCAVATION PLAN
HALIFAX COUNTY ASH MONOFILL

SCALE 1"=100'	DRAWN BY: JDB	CHECKED BY: GNR
JOB NO. 3720	DATE: 2-92	PAGE 4 OF 29

FILENAME: HBOTTOM.DWG

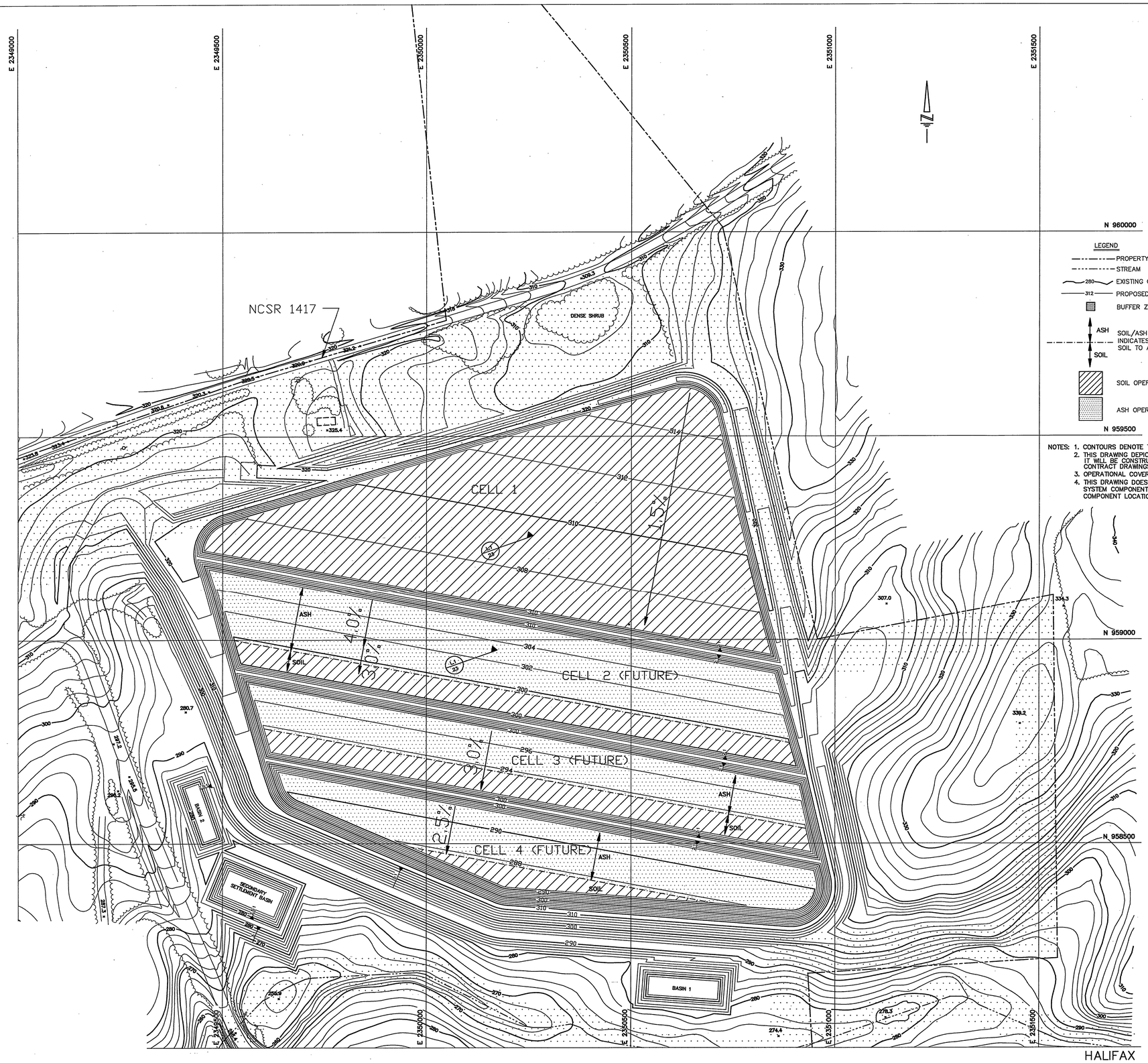

LEGEND

- PROPERTY LINE
- STREAM
- 280 EXISTING GROUND SURFACE CONTOURS
- 312 PROPOSED EARTHWORK CONTOURS
- BUFFER ZONE
- ASH / SOIL — SOIL/ASH OPERATIONAL COVER DELINEATION INDICATES CHANGE IN OPERATIONAL COVER FROM SOIL TO ASH
- SOIL OPERATIONAL COVER
- ASH OPERATIONAL COVER

NOTES:
1. CONTOURS DENOTE TOP OF 1 FOOT OPERATIONAL COVER
2. THIS DRAWING DEPICTS COMPLETE DEVELOPMENT OF THE FACILITY. IT WILL BE CONSTRUCTED IN 4 PHASES AS SET FORTH IN THESE CONTRACT DRAWINGS.
3. OPERATIONAL COVER MATERIAL INDICATED BY SHADING IN GIVEN AREA
4. THIS DRAWING DOES NOT SHOW THE INTERNAL STORMWATER COLLECTION SYSTEM COMPONENTS. SEE SHEET 4 AND ALL EXCAVATION PLANS FOR COMPONENT LOCATIONS

0 50 100 200 300 400 500
25 75
SCALE: 1"=100'

TOPOGRAPHIC SURVEY BY
PHOTO SCIENCE INC.
GREENSBORO, N.C.
SURVEY FLOWN 2-1-91

NORTH CAROLINA PROFESSIONAL ENGINEER SEAL 8895 GREGORY N. RICHARDSON

NO.	DATE	DESCRIPTION	BY

HAZEN AND SAWYER
Environmental Engineers & Scientists

OPERATIONAL COVER PLAN
HALIFAX COUNTY ASH MONOFILL

SCALE	DRAWN BY:	CHECKED BY:
1"=100'	JDB	GNR
JOB NO. 3720	DATE: 2-92	PAGE 5 OF 29

FILENAME: SPECIFICATIONS

LEGEND

- PROPERTY LINE
- STREAM
- DRAINAGE SWALE
- SILT FENCE
- DRAINAGE PIPE
- DRAINAGE DIRECTION ARROW
- DROP INLET
- INTERNAL STORMWATER COLLECTION SUMP
- BENCHMARK
- MW-1 EXISTING MONITOR WELL
- PMW-4 PROPOSED MONITOR WELL
- B-10 SOIL BORINGS PERFORMED 1991 (BY ENSCI CORP.)
- B-9 PIEZOMETER INSTALLED 1991
- 280 EXISTING GROUND SURFACE CONTOURS
- 312 PROPOSED EARTHWORK CONTOURS
- BUFFER ZONE

NOTES:
1. CONTOURS DENOTE SYNTHETIC LINER SUBGRADE ELEVATIONS
2. SEE OPERATIONAL COVER PLAN FOR TOP OF OPERATIONAL COVER ELEVATIONS
3. INSTALL SUMPS 1, 2, 3 AND HEADER PIPE DURING CONSTRUCTION OF CELL 1. INSTALL PROTECTIVE COVERS ON SUMPS 2 AND 3 AS DETAILED IMMEDIATELY AFTER INSTALLATION.
4. SEE DETAIL SHEETS 28 AND 29 FOR BASIN LAYOUT INFORMATION

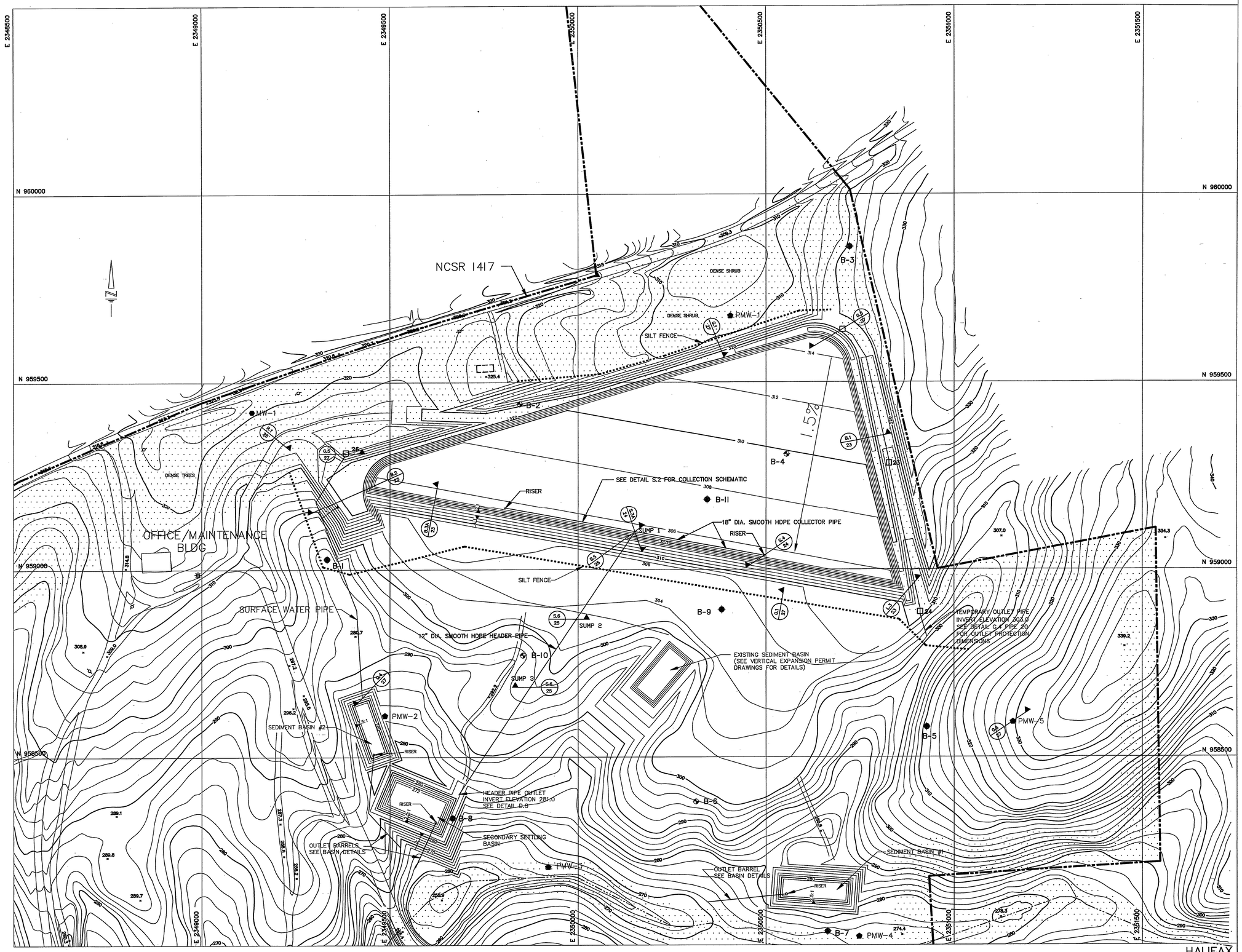

TOPOGRAPHIC SURVEY BY

PSI

PHOTO SCIENCE INC.
GREENSBORO, N.C.

SURVEY FLOWN 2-1-91

0 50 100 200 300 400 500
25 75

SCALE: 1"=100'

NORTH CAROLINA PROFESSIONAL SEAL 8895 ENGINEER GREGORY N. RICHARDSON

NO.	DATE	DESCRIPTION	BY

HAZEN AND SAWYER
Environmental Engineers & Scientists

EXCAVATION PLAN CELL 1

HALIFAX COUNTY ASH MONOFILL

SCALE	DRAWN BY:	CHECKED BY:
1"=100'	JDB	GNR
JOB NO. 3720	DATE: 2-92	PAGE 6 OF 29

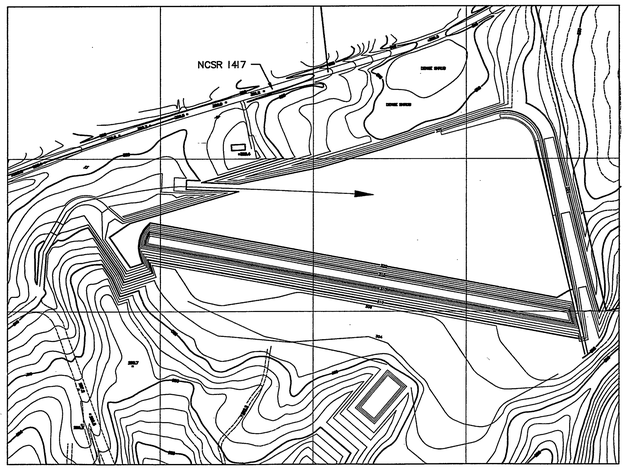

PHASE 1A: FILLED TO ELEVATION 320

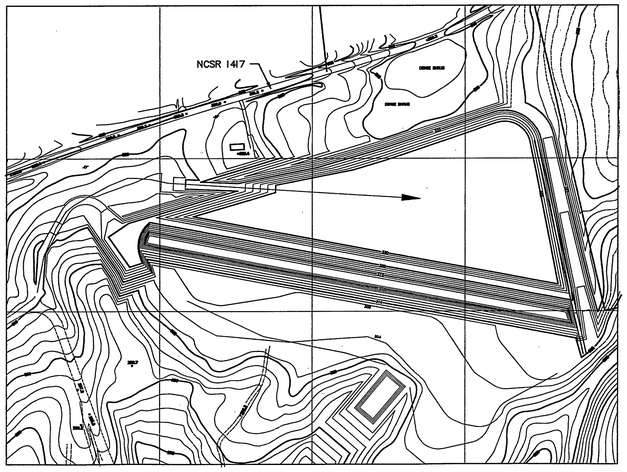

PHASE 1B: FILLED TO ELEVATION 330

NOTES:
1. THESE DRAWINGS DEPICT THE SEQUENTIAL FILLING OF CELL 1 EACH PHASE DENOTES AN APPROXIMATE 10 FOOT LIFT OF ASH.
2. THE ACCESS ARROWS INDICATE ACCESS FOR THAT PHASE
3. THE CELL INTERIM COVER ELEVATIONS ARE SHOWN ON THE FOLLOWING SHEET
4. CONTOURS DENOTE TOP OF ASH ELEVATIONS

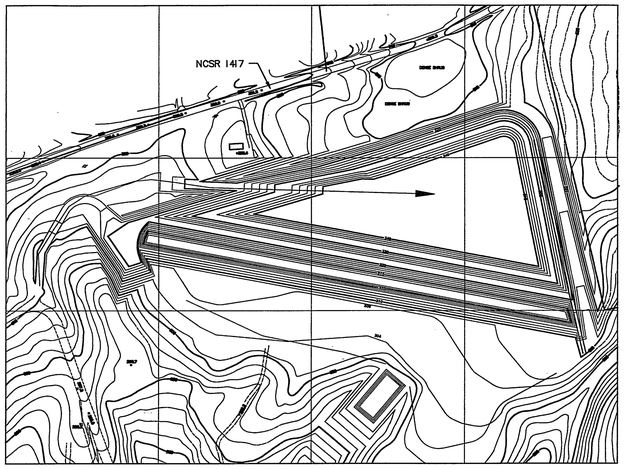

PHASE 1C: FILLED TO ELEVATION 340

→ ACCESS TO ACTIVE FACE

NORTH CAROLINA PROFESSIONAL SEAL 8895 ENGINEER SANFORD N. RICHARDSON

NO.	DATE	DESCRIPTION	BY

HAZEN AND SAWYER
Environmental Engineers & Scientists

PHASING PLAN
CELL 1

HALIFAX COUNTY ASH MONOFILL

SCALE NTS	DRAWN BY: JDB	CHECKED BY: GNR
JOB NO. 3720	DATE: 2-92	PAGE 7 OF 29

FILENAME: CELL1.DWG

LEGEND

- PROPERTY LINE
- STREAM
- DRAINAGE SWALE
- SILT FENCE
- DRAINAGE PIPE
- DRAINAGE DIRECTION ARROW
- DROP INLET
- INTERNAL STORMWATER COLLECTION SUMP
- BENCHMARK
- MW-1 EXISTING MONITOR WELL
- PMW-4 PROPOSED MONITOR WELL
- B-10 SOIL BORINGS PERFORMED 1991 (BY ENSCI CORP.)
- B-9 PIEZOMETER INSTALLED 1991
- 280 EXISTING GROUND SURFACE CONTOURS
- 312 PROPOSED EARTHWORK CONTOURS
- BUFFER ZONE

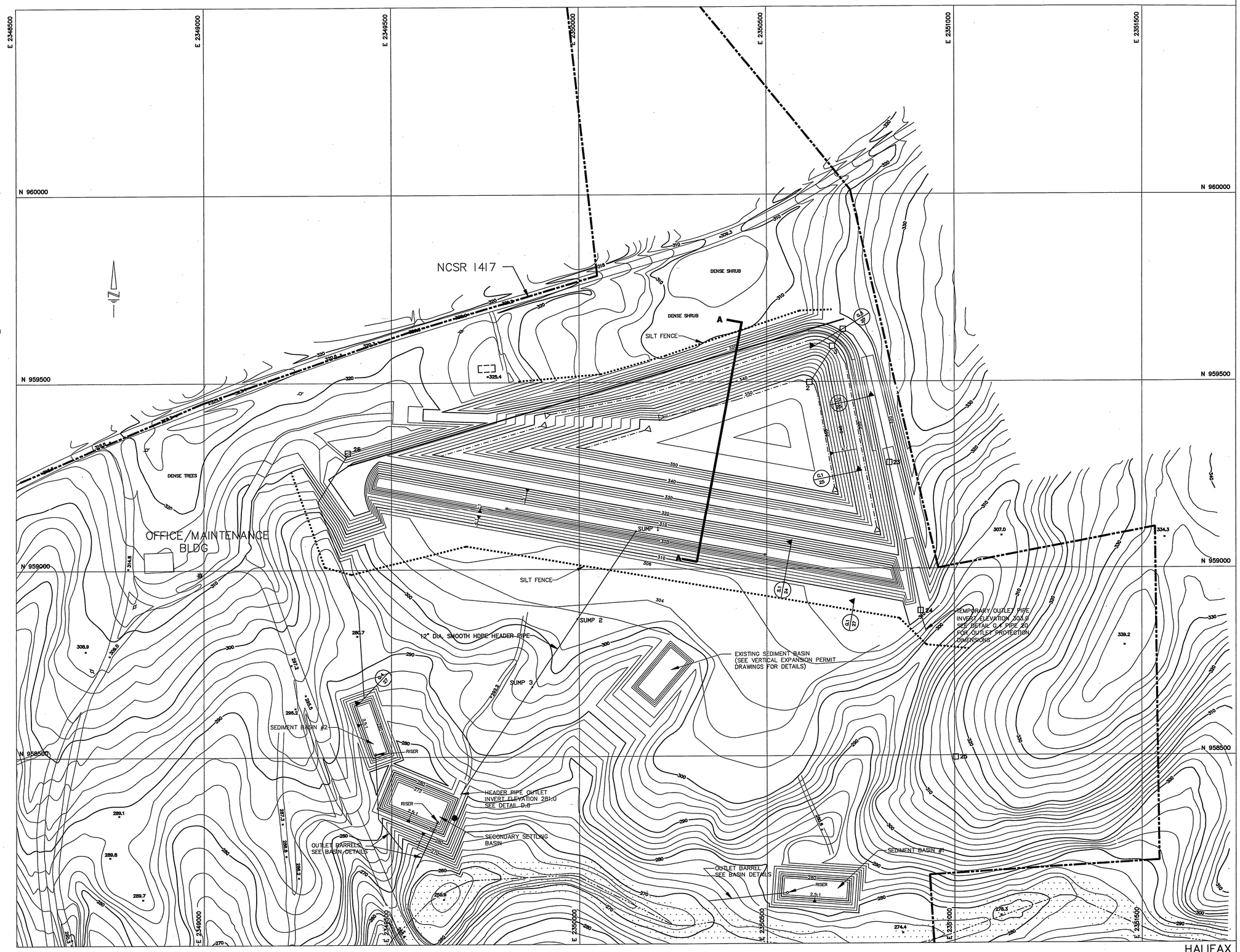

TOPOGRAPHIC SURVEY BY

PSI

PHOTO SCIENCE INC.
GREENSBORO, N.C.

SURVEY FLOWN 2-1-91

NOTES:
1. DRAWING DEPICTS CELL 1, PHASE D, FILLED TO ELEVATION 354
2. CELL 2 WILL BE OPERATIONAL PRIOR TO REACHING THIS PHASE.
3. FOR CELL 2 EXCAVATION PLAN SEE SHEET 9
4. FOR EROSION AND SEDIMENTATION CONTROL SEE SHEET 18

0 50 100 200 300 400 500
25 75

SCALE: 1"=100'

NORTH CAROLINA PROFESSIONAL SEAL 8895 ENGINEER GREGORY K. RICHARDSON

NO.	DATE	DESCRIPTION	BY

HAZEN AND SAWYER
Environmental Engineers & Scientists

INTERIM COVER CELL 1

SCALE 1"=100'	DRAWN BY: JDB	CHECKED BY: GNR
JOB NO. 3720	DATE: 2-92	PAGE 8 OF 29

LEGEND

- PROPERTY LINE
- STREAM
- DRAINAGE SWALE
- SILT FENCE
- DRAINAGE PIPE
- DRAINAGE DIRECTION ARROW
- DROP INLET
- INTERNAL STORMWATER COLLECTION SUMP
- BENCHMARK
- MW-1 EXISTING MONITOR WELL
- PMW-4 PROPOSED MONITOR WELL
- B-10 SOIL BORINGS PERFORMED 1991 (BY ENSCI CORP.)
- B-9 PIEZOMETER INSTALLED 1991
- 280 EXISTING GROUND SURFACE CONTOURS
- 312 PROPOSED EARTHWORK CONTOURS
- BUFFER ZONE

NOTES:
1. CONTOURS IN CELL 2 DENOTE SYNTHETIC LINER SUBGRADE ELEVATIONS
2. SEE OPERATIONAL COVER PLAN FOR TOP OF OPERATIONAL COVER ELEVATIONS
3. LEAVE SUMP 3 PROTECTIVE COVER IN PLACE DURING THIS PHASE
4. SUMPS AND HEADER PIPES WERE INSTALLED DURING CONSTRUCTION OF CELL 1
5. SEE SHEETS 28 AND 29 FOR BASIN DETAILS

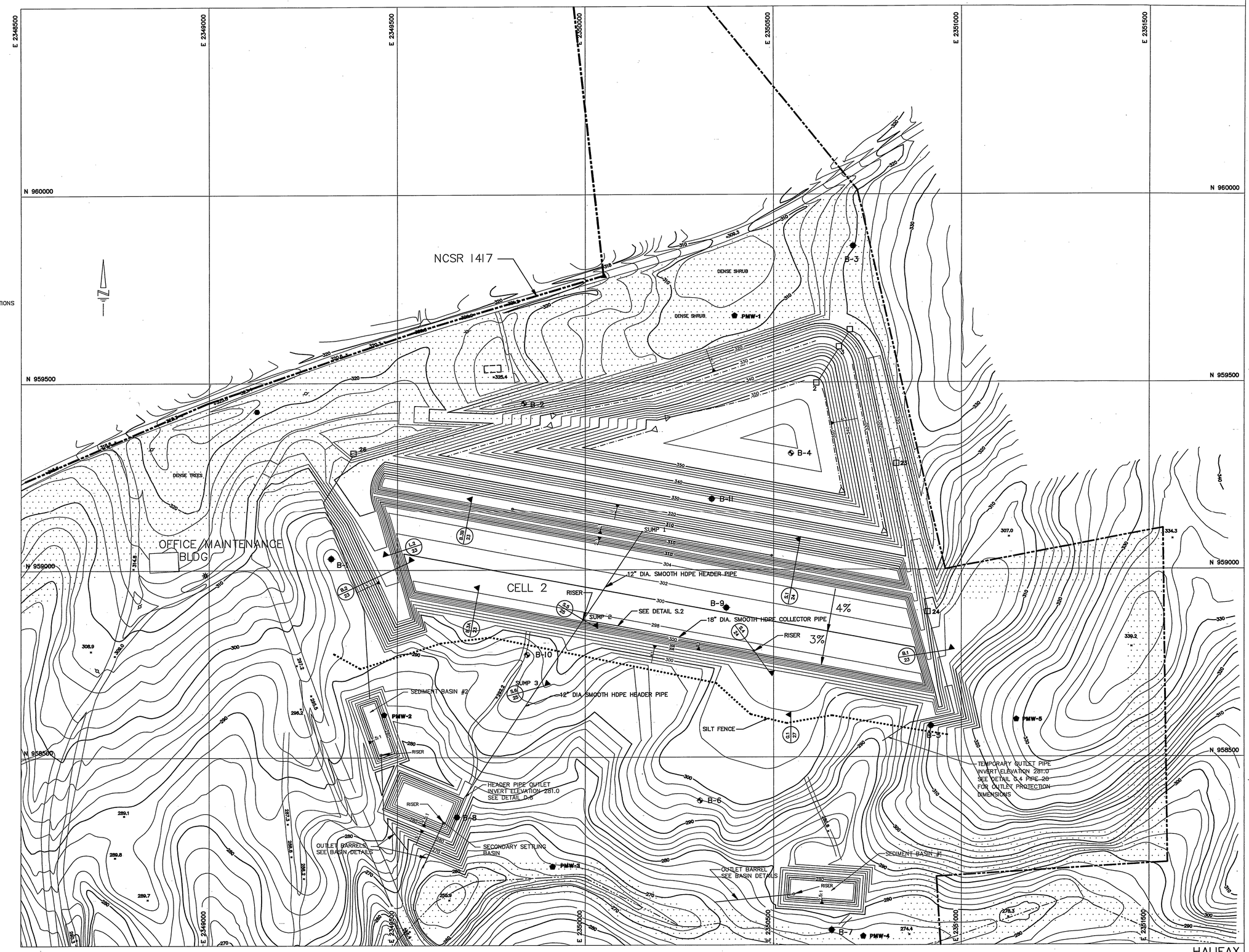

TOPOGRAPHIC SURVEY BY

PSI

PHOTO SCIENCE INC.
GREENSBORO, N.C.

SURVEY FLOWN 2-1-91

0 50 100 200 300 400 500
25 75

SCALE: 1"=100'

NORTH CAROLINA PROFESSIONAL SEAL 8895 ENGINEER GREGORY N. RICHARDSON

NO.	DATE	DESCRIPTION	BY

HAZEN AND SAWYER
Environmental Engineers & Scientists

EXCAVATION PLAN CELL 2

HALIFAX COUNTY ASH MONOFILL

SCALE	DRAWN BY:	CHECKED BY:
1"=100'	JDB	GNR
JOB NO. 3720	DATE: 2-92	PAGE 9 OF 29

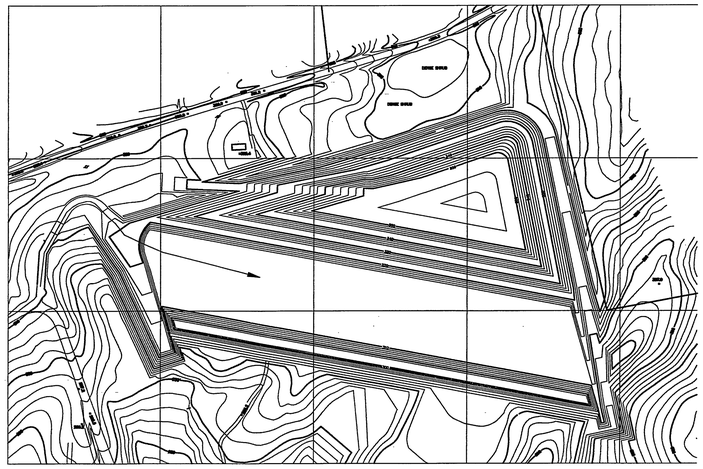

PHASE 2A: FILLED TO ELEVATION 310

PHASE 2B: FILLED TO ELEVATION 320

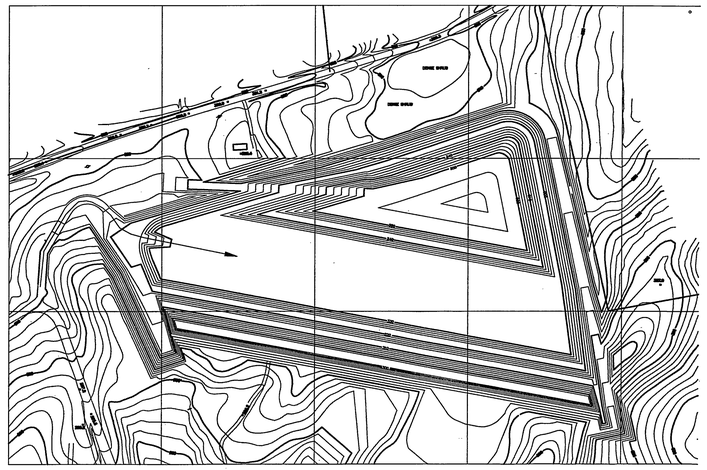

PHASE 2C: FILLED TO ELEVATION 330

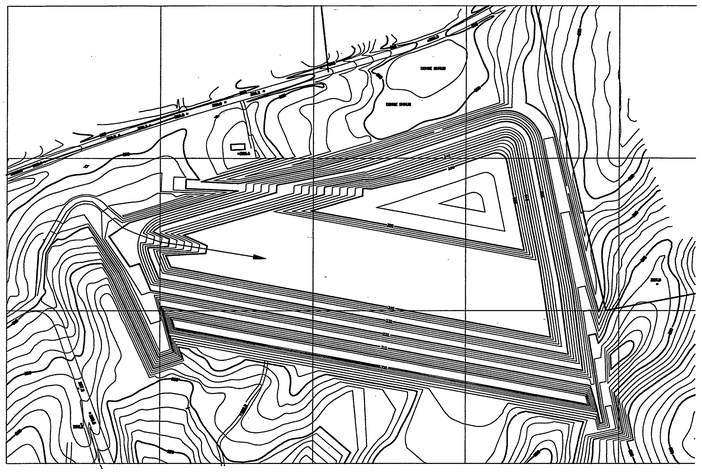

PHASE 2D: FILLED TO ELEVATION 340

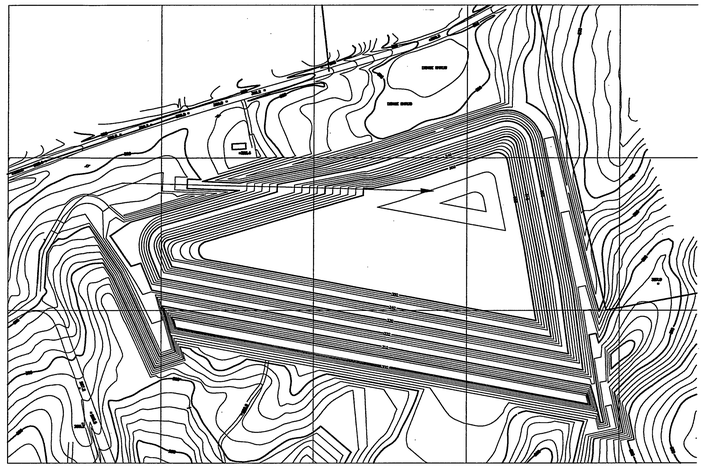

PHASE 2E: FILLED TO ELEVATION 360

NOTES:
1. THESE DRAWINGS DEPICT THE SEQUENTIAL FILLING OF CELL 2 EACH PHASE DENOTES AN APPROXIMATE 10 FOOT LIFT OF ASH.
2. THE ACCESS ARROWS INDICATE ACCESS FOR THAT PHASE
3. THE CELL 2 INTERIM COVER ELEVATIONS ARE SHOWN ON THE FOLLOWING SHEET
4. CONTOURS DENOTE TOP OF ASH ELEVATIONS

→ ACCESS TO ACTIVE FACE

NORTH CAROLINA PROFESSIONAL SEAL 8895 ENGINEER GREGORY N. RICHARDSON

NO.	DATE	DESCRIPTION	BY

HAZEN AND SAWYER
Environmental Engineers & Scientists

PHASING PLAN CELL 2

HALIFAX COUNTY ASH MONOFILL

SCALE	DRAWN BY:	CHECKED BY:
NTS	JDB	GNR
JOB NO. 3720	DATE: 2-92	PAGE 10 OF 29

FILENAME: CELL2.DWG

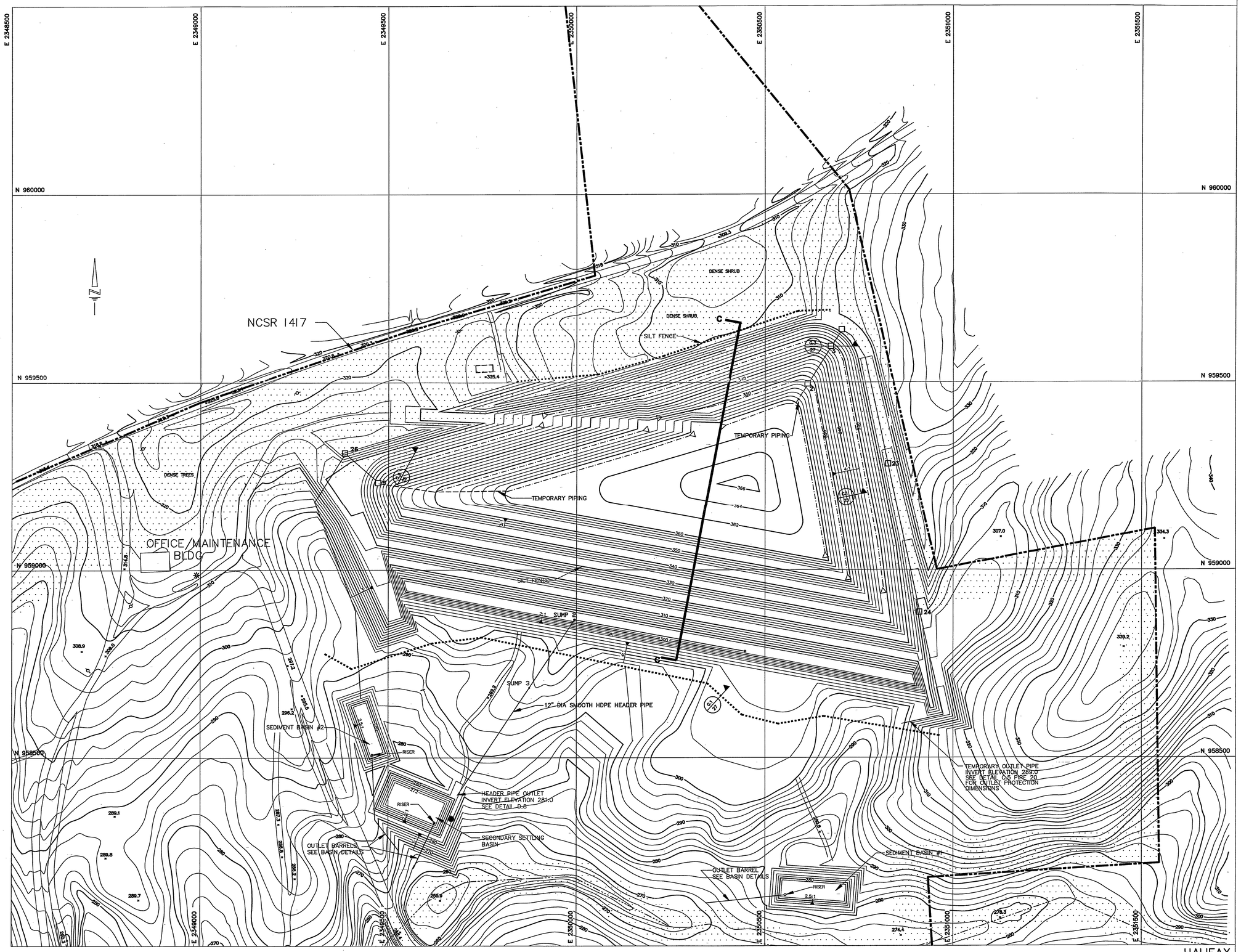

LEGEND

- PROPERTY LINE
- STREAM
- DRAINAGE SWALE
- SILT FENCE
- DRAINAGE PIPE
- DRAINAGE DIRECTION ARROW
- DROP INLET
- INTERNAL STORMWATER COLLECTION SUMP
- BENCHMARK
- MW-1 EXISTING MONITOR WELL
- PMW-4 PROPOSED MONITOR WELL
- B-10 SOIL BORINGS PERFORMED 1991 (BY ENSCI CORP.)
- B-9 PIEZOMETER INSTALLED 1991
- 280 EXISTING GROUND SURFACE CONTOURS
- 312 PROPOSED EARTHWORK CONTOURS
- BUFFER ZONE

NOTES:
1. DRAWING DEPICTS CELL 2, PHASE F, FILLED TO ELEVATION 364
2. CELL 3 WILL BE OPERATIONAL PRIOR TO REACHING THIS PHASE
3. FOR CELL 3 EXCAVATION PLAN SEE SHEET 12
4. FOR EROSION AND SEDIMENTATION CONTROL SEE SHEET 18

0 50 100 200 300 400 500
25 75
SCALE: 1"=100'

TOPOGRAPHIC SURVEY BY
PSI
PHOTO SCIENCE INC.
GREENSBORO, N.C.
SURVEY FLOWN 2-1-91

NORTH CAROLINA PROFESSIONAL SEAL 8895 ENGINEER GREGORY A. RICHARDSON

NO.	DATE	DESCRIPTION	BY

HAZEN AND SAWYER
Environmental Engineers & Scientists

INTERIM COVER CELL 2

HALIFAX COUNTY ASH MONOFILL

SCALE	DRAWN BY:	CHECKED BY:
1"=100'	JDB	GNR
JOB NO. 3720	DATE: 2-92	PAGE 11 OF 29

LEGEND

- PROPERTY LINE
- STREAM
- DRAINAGE SWALE
- SILT FENCE
- DRAINAGE PIPE
- DRAINAGE DIRECTION ARROW
- DROP INLET
- INTERNAL STORMWATER COLLECTION SUMP
- BENCHMARK
- MW-1 EXISTING MONITOR WELL
- PMW-4 PROPOSED MONITOR WELL
- B-10 SOIL BORINGS PERFORMED 1991 (BY ENSCI CORP.)
- B-9 PIEZOMETER INSTALLED 1991
- 280 EXISTING GROUND SURFACE CONTOURS
- 312 PROPOSED EARTHWORK CONTOURS
- BUFFER ZONE

NOTES:
1. CONTOURS IN CELL 3 DENOTE SYNTHETIC LINER SUBGRADE ELEVATIONS
2. SEE OPERATIONAL COVER PLAN FOR TOP OF OPERATIONAL COVER ELEVATIONS
3. SUMPS AND HEADER PIPE WERE INSTALLED DURING CONSTRUCTION OF CELL 1

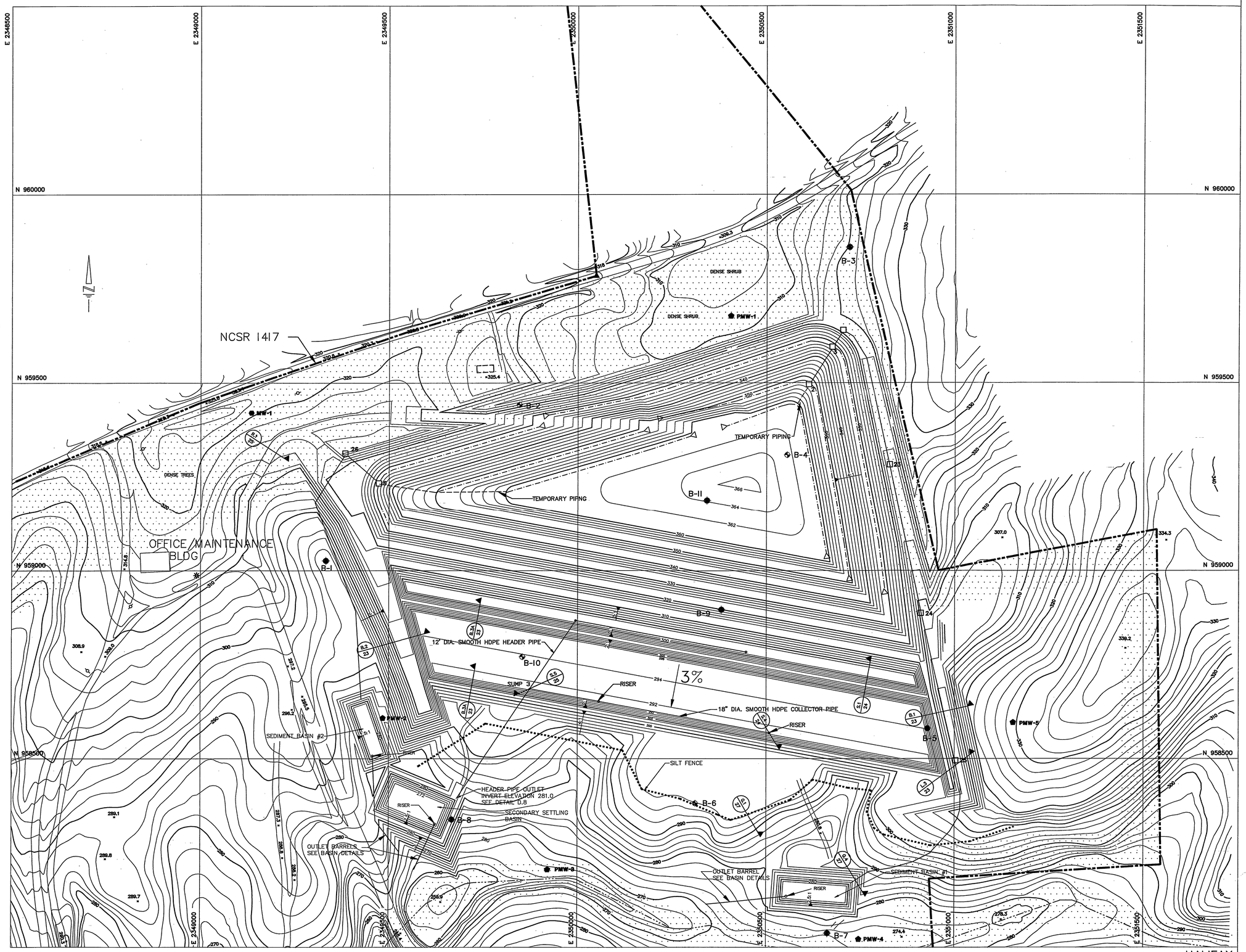

TOPOGRAPHIC SURVEY BY

PHOTO SCIENCE INC.
GREENSBORO, N.C.

SURVEY FLOWN 2-1-91

0 50 100 200 300 400 500
25 75
SCALE: 1"=100'

NO.	DATE	DESCRIPTION	BY

HAZEN AND SAWYER
Environmental Engineers & Scientists

EXCAVATION PLAN CELL 3

HALIFAX COUNTY ASH MONOFILL

SCALE 1"=100'	DRAWN BY: JDB	CHECKED BY: GNR
JOB NO. 3720	DATE: 2-92	PAGE 12 OF 29

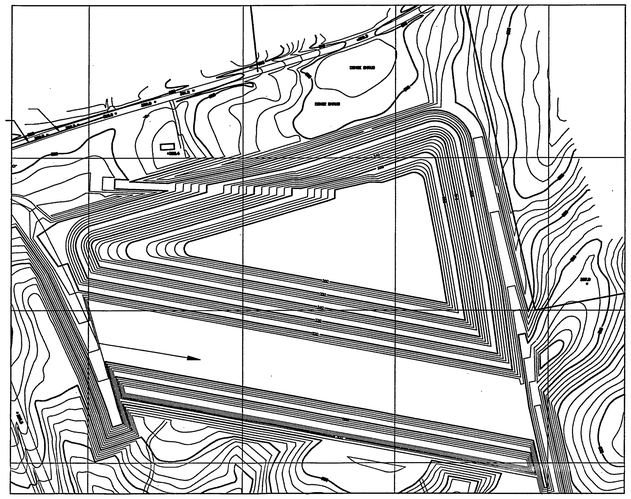

PHASE 3A: FILLED TO ELEVATION 310

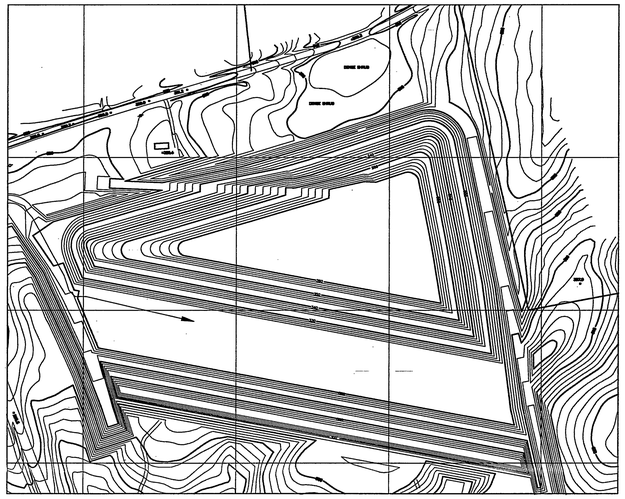

PHASE 3B: FILLED TO ELEVATION 320

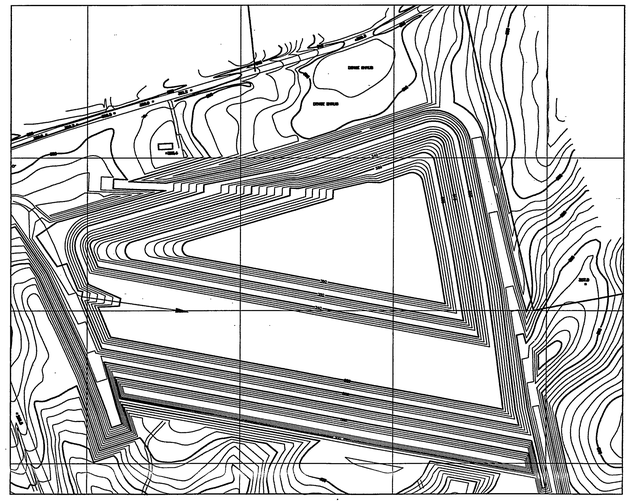

PHASE 3C: FILLED TO ELEVATION 330

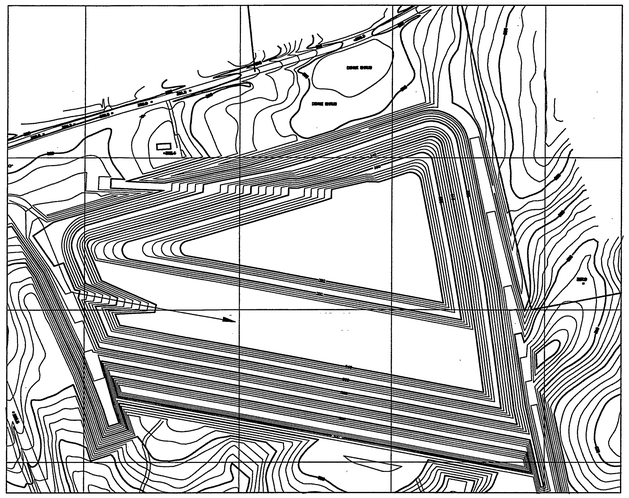

PHASE 3D: FILLED TO ELEVATION 340

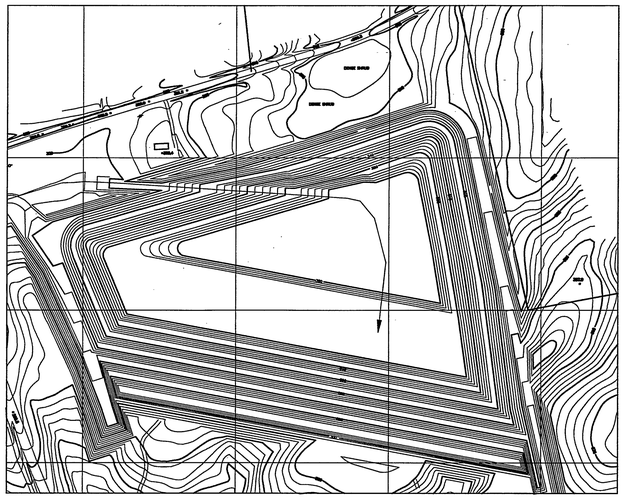

PHASE 3E: FILLED TO ELEVATION 350

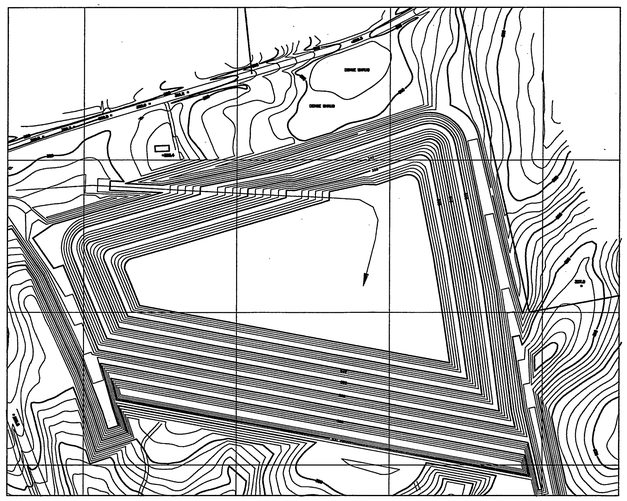

PHASE 3F: FILLED TO ELEVATION 360

NOTES: 1. THESE DRAWINGS DEPICT THE SEQUENTIAL FILLING OF CELL 3 EACH PHASE DENOTES AN APPROXIMATE 10 FOOT LIFT OF ASH.
2. THE ACCESS ARROWS INDICATE ACCESS FOR THAT PHASE
3. THE CELL 3 INTERIM COVER ELEVATIONS ARE SHOWN ON THE FOLLOWING SHEET
4. CONTOURS DENOTE TOP OF ASH ELEVATIONS

→ ACCESS TO ACTIVE FACE

NORTH CAROLINA PROFESSIONAL SEAL 8895 ENGINEER GREGORY N. RICHARDSON

NO.	DATE	DESCRIPTION	BY

HAZEN AND SAWYER
Environmental Engineers & Scientists

PHASING PLAN CELL 3

HALIFAX COUNTY ASH MONOFILL

SCALE NTS	DRAWN BY: JDB	CHECKED BY: GNR
JOB NO. 3720	DATE: 2-92	PAGE 13 OF 29

FILENAME: CELL3.DWG

LEGEND

- PROPERTY LINE
- STREAM
- DRAINAGE SWALE
- SILT FENCE
- DRAINAGE PIPE
- DRAINAGE DIRECTION ARROW
- DROP INLET
- INTERNAL STORMWATER COLLECTION SUMP
- BENCHMARK
- MW-1 EXISTING MONITOR WELL
- PMW-4 PROPOSED MONITOR WELL
- B-10 SOIL BORINGS PERFORMED 1991 (BY ENSCI CORP.)
- B-9 PIEZOMETER INSTALLED 1991
- 280 EXISTING GROUND SURFACE CONTOURS
- 312 PROPOSED EARTHWORK CONTOURS
- BUFFER ZONE

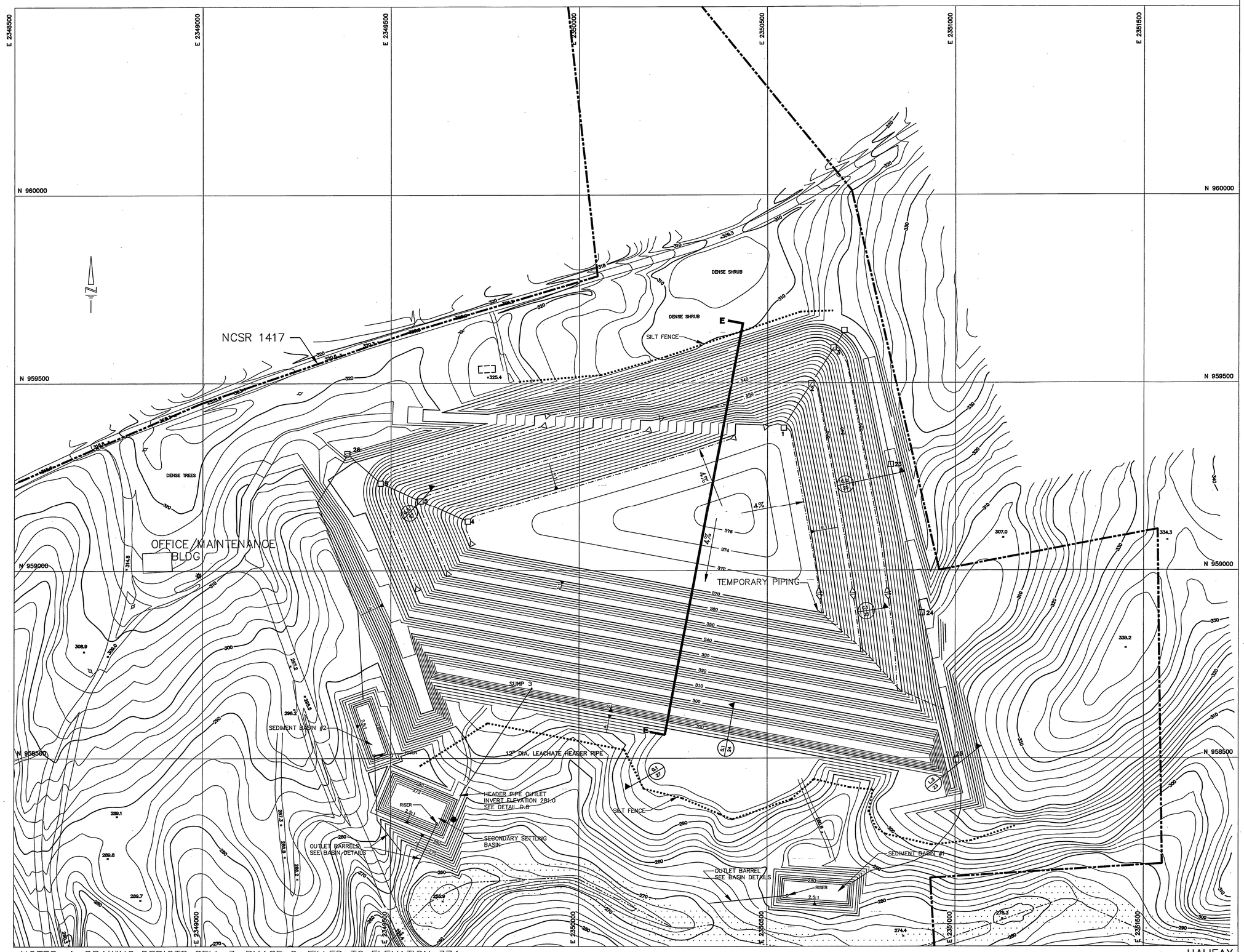

NOTES:
1. DRAWING DEPICTS CELL 3, PHASE G, FILLED TO ELEVATION 374
2. CELL 4 WILL BE OPERATIONAL PRIOR TO REACHING THIS STAGE
3. FOR CELL 4 EXAVATION PLAN SEE SHEET 15
4. FOR EROSION AND SEDIMENTATION CONTROL SEE SHEET 18

0 50 100 200 300 400 500
25 75
SCALE: 1"=100'

TOPOGRAPHIC SURVEY BY
PSI
PHOTO SCIENCE INC.
GREENSBORO, N.C.
SURVEY FLOWN 2-1-91

NORTH CAROLINA PROFESSIONAL SEAL 8895 ENGINEER GEOFF N. RICHARDSON

NO.	DATE	DESCRIPTION	BY

HALIFAX

HAZEN AND SAWYER
Environmental Engineers & Scientists

INTERIM COVER CELL 3

HALIFAX COUNTY ASH MONOFILL

SCALE 1"=100'	DRAWN BY: JDB	CHECKED BY: GNR
JOB NO. 3720	DATE: 2-92	PAGE 14 OF 29

LEGEND

- PROPERTY LINE
- STREAM
- DRAINAGE SWALE
- SILT FENCE
- DRAINAGE PIPE
- DRAINAGE DIRECTION ARROW
- DROP INLET
- INTERNAL STORMWATER COLLECTION SUMP
- BENCHMARK
- MW-1 EXISTING MONITOR WELL
- PMW-4 PROPOSED MONITOR WELL
- B-10 SOIL BORINGS PERFORMED 1991 (BY ENSCI CORP.)
- B-9 PIEZOMETER INSTALLED 1991
- 280 EXISTING GROUND SURFACE CONTOURS
- 312 PROPOSED EARTHWORK CONTOURS
- BUFFER ZONE

NOTES:
1. CONTOURS IN CELL 4 DENOTE SYNTHETIC LINER SUBGRADE ELEVATIONS
2. SEE OPERATIONAL COVER PLAN FOR TOP OF OPERATIONAL COVER ELEVATIONS
3. SUMP 3 AND ITS HEADER PIPE WERE INSTALLED DURING CONSTRUCTION OF CELL 1. INSTALL SUMP 4 AND ITS HEADER PIPE DURING CONSTRUCTION OF CELL 4.

TOPOGRAPHIC SURVEY BY

PSI

PHOTO SCIENCE INC.
GREENSBORO, N.C.

SURVEY FLOWN 2-1-91

0 50 100 200 300 400 500
25 75
SCALE: 1"=100'

NORTH CAROLINA PROFESSIONAL SEAL 8895 ENGINEER GREGORY N. RICHARDSON

NO.	DATE	DESCRIPTION	BY

HAZEN AND SAWYER
Environmental Engineers & Scientists

EXCAVATION PLAN CELL 4

HALIFAX COUNTY ASH MONOFILL

SCALE 1"=100'	DRAWN BY: JDB	CHECKED BY: GNR
JOB NO. 3720	DATE 2-92	PAGE 15 OF 29

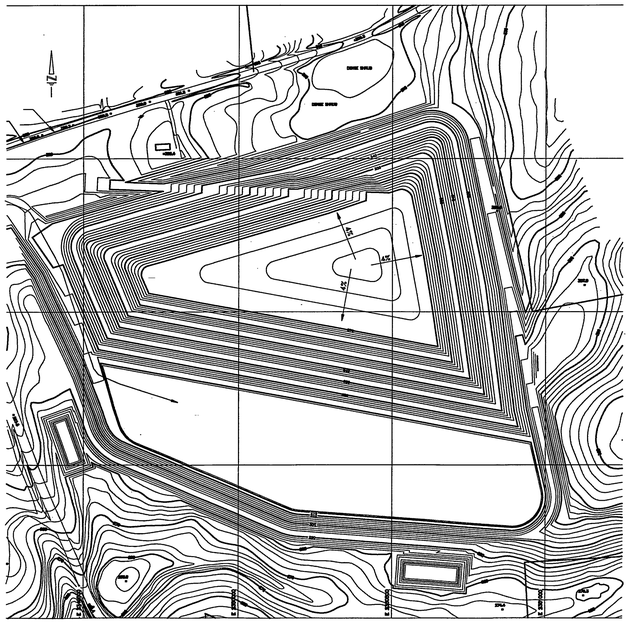

PHASE 4A: FILLED TO ELEVATION 304

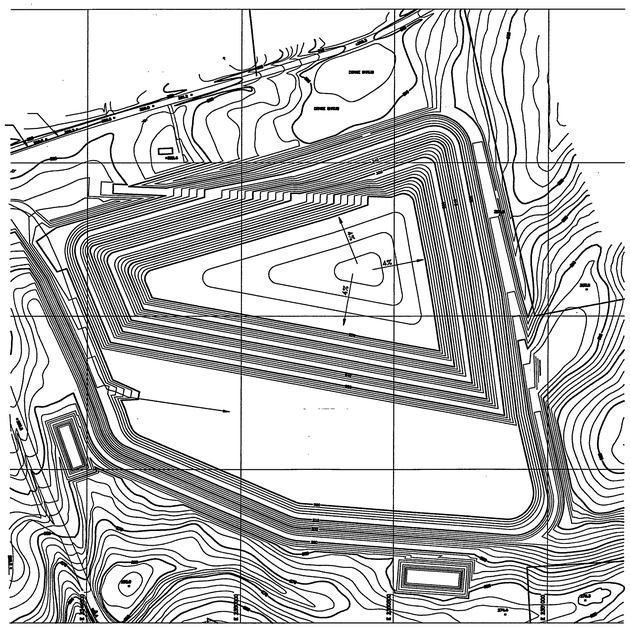

PHASE 4B: FILLED TO ELEVATION 320

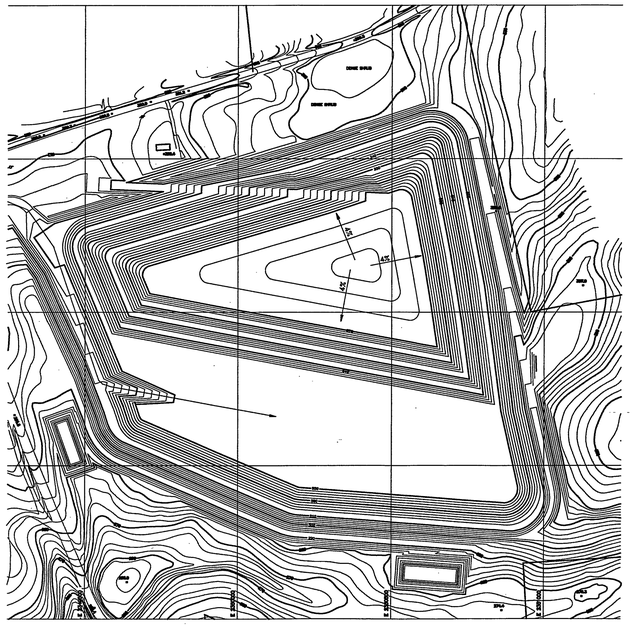

PHASE 4C: FILLED TO ELEVATION 330

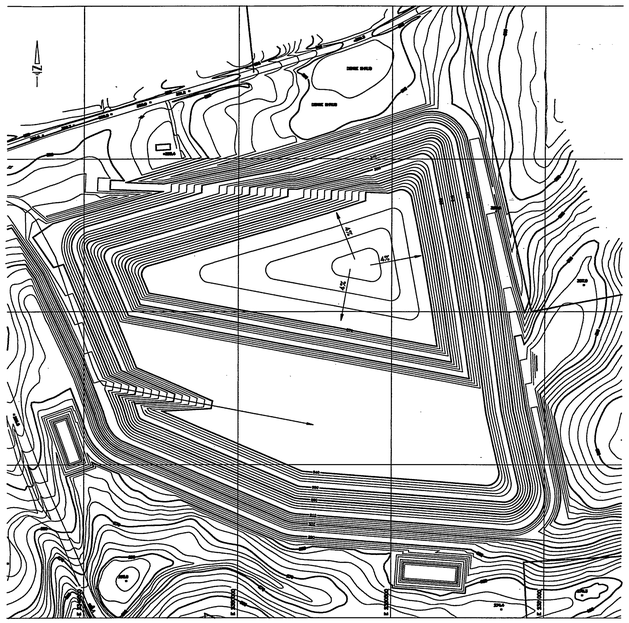

PHASE 4D: FILLED TO ELEVATION 340

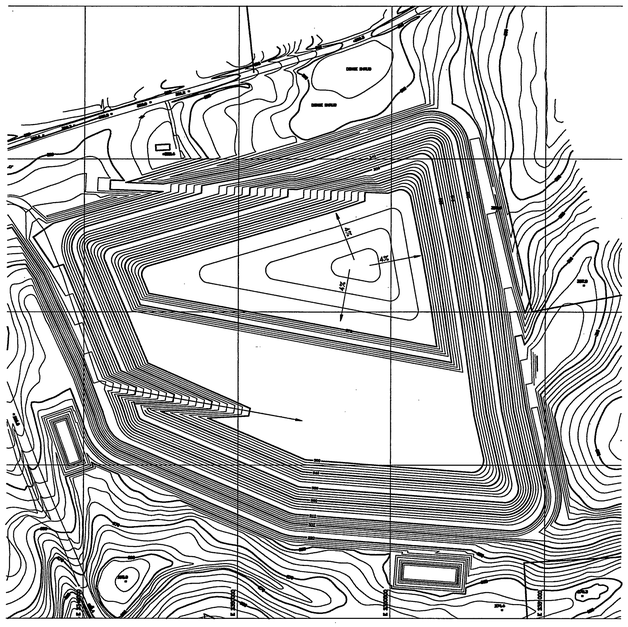

PHASE 4E: FILLED TO ELEVATION 350

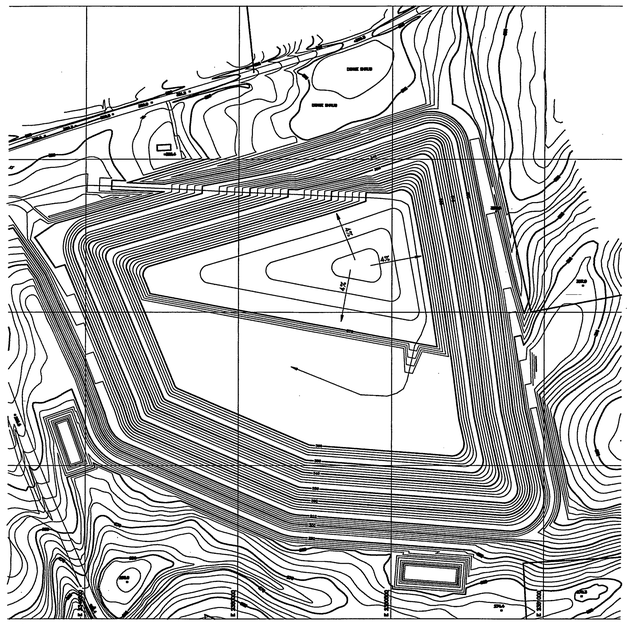

PHASE 4F: FILLED TO ELEVATION 360

NOTES:
1. THESE DRAWINGS DEPICT THE SEQUENTIAL FILLING OF CELL 4 EACH PHASE DENOTES AN APPROXIMATE 10 FOOT LIFT OF ASH.
2. THE ACCESS ARROWS INDICATE ACCESS FOR THAT PHASE
3. THE CELL 4 INTERIM COVER ELEVATIONS ARE SHOWN ON THE FOLLOWING SHEET
4. CONTOURS DENOTE TOP OF ASH ELEVATIONS

ACCESS TO ACTIVE FACE

NORTH CAROLINA PROFESSIONAL SEAL 8895 ENGINEER GREGORY N. RICHARDSON

NO.	DATE	DESCRIPTION	BY

HAZEN AND SAWYER
Environmental Engineers & Scientists

PHASING PLAN CELL 4

HALIFAX COUNTY ASH MONOFILL

SCALE 1"=200'	DRAWN BY: JDB	CHECKED BY: GNR
JOB NO. 3720	DATE: 2-92	PAGE 16 OF 29

FILENAME: CELL 4.DWG

LEGEND

- PROPERTY LINE
- STREAM
- DRAINAGE SWALE
- SILT FENCE
- DRAINAGE PIPE
- DRAINAGE DIRECTION ARROW
- DROP INLET
- INTERNAL STORMWATER COLLECTION SUMP
- BENCHMARK
- MW-1 EXISTING MONITOR WELL
- PMW-4 PROPOSED MONITOR WELL
- B-10 SOIL BORINGS PERFORMED 1991 (BY ENSCI CORP.)
- B-9 PIEZOMETER INSTALLED 1991
- 280 EXISTING GROUND SURFACE CONTOURS
- 312 PROPOSED EARTHWORK CONTOURS
- BUFFER ZONE

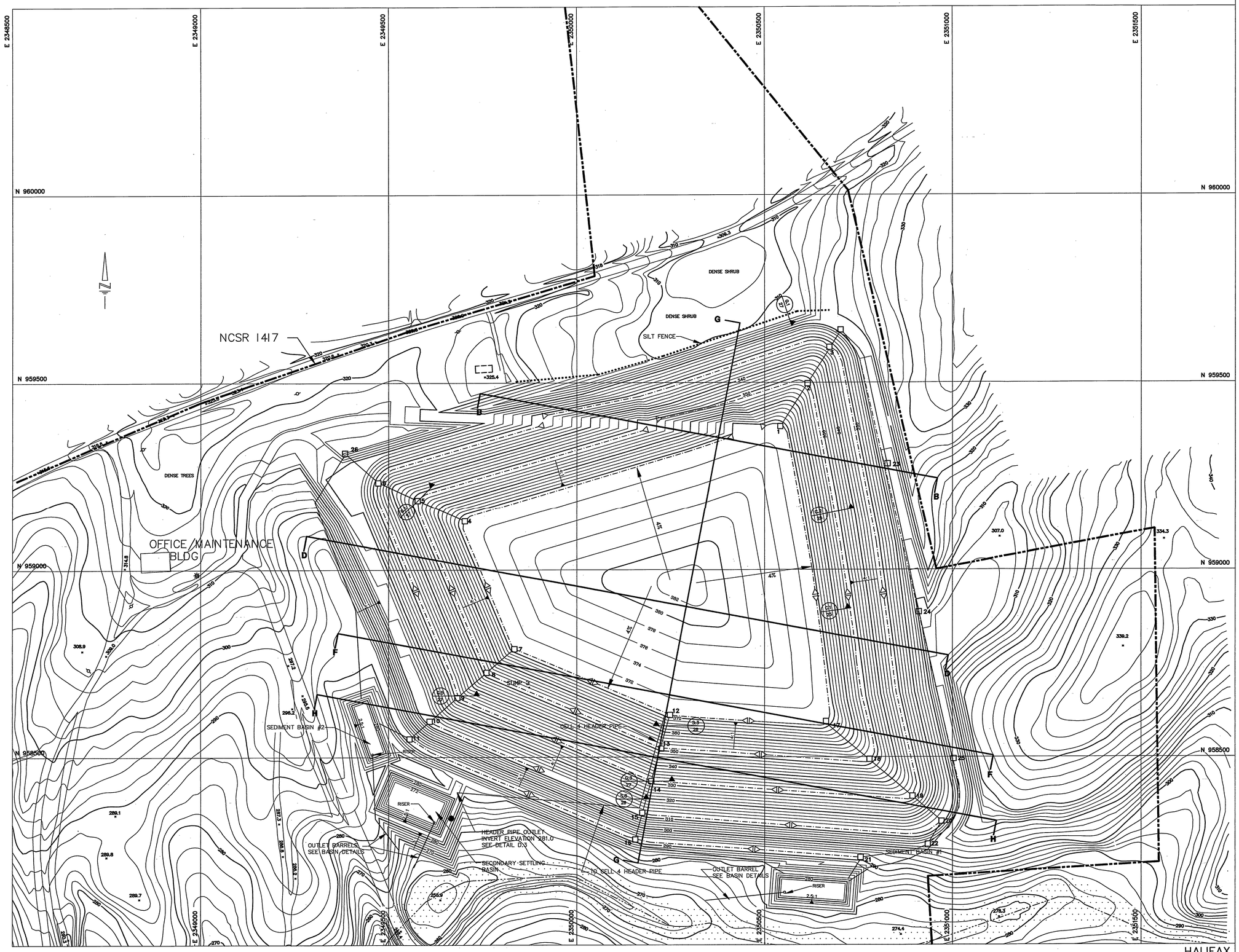

TOPOGRAPHIC SURVEY BY

PHOTO SCIENCE INC.
GREENSBORO, N.C.

SURVEY FLOWN 2-1-91

NOTES: 1. DRAWING DEPICTS TOTAL DEVELOPMENT OF ASH MONOFILL
2. CONTOURS DEPICT TOP OF COVER ELEVATIONS
3. FOR EROSION AND SEDIMENTATION CONTROL, SEE SHEET 18.

0 50 100 200 300 400 500
25 75

SCALE: 1"=100'

NORTH CAROLINA PROFESSIONAL SEAL 8895 ENGINEER GREGORY N. RICHARDSON

NO.	DATE	DESCRIPTION	BY

HAZEN AND SAWYER
Environmental Engineers & Scientists

FINAL ELEVATION PLAN

HALIFAX COUNTY ASH MONOFILL

SCALE 1"=100'	DRAWN BY: JDB	CHECKED BY: GNR
JOB NO. 3720	DATE: 2-92	PAGE 17 OF 29

PIPE SCHEDULE

PIPE SECTION	FROM	TO	UPSTREAM INVERT	DOWNSTREAM INVERT	LENGTH	DIA. (IN.)
1	D1	D2	367.0	347.0	140'	18"
2	D2	D3	346.8	327.0	110'	18"
3	D4	D5	367.0	347.0	140'	18"
4	D5	D6	346.8	327.0	120'	18"
5	D7	D8	367.0	347.0	90'	18"
6	D8	D9	346.8	327.0	100'	18"
7	D9	D10	326.8	307.0	90'	18"
8	D10	D11	306.8	287.0	80'	18"
9	D12	D13	367.0	347.0	90'	18"
10	D13	D14	346.8	327.0	90'	18"
11	D14	D15	326.8	307.0	90'	18"
12	D15	D16	306.8	287.0	75'	18"
13	D17	D18	367.0	347.0	150'	18"
14	D18	D19	346.8	327.0	150'	18"
15	D19	D20	326.8	307.0	90'	18"
16	D3	D27	326.8	317.0	50'	18"
17	D27	D23	316.5	312.5	400'	24"
18	D23	D24	312.3	305.9	400'	24"
19	D24	D25	305.7	299.6	400'	24"
20	D25	BASIN 1	299.0	286.0	450'	24"
21	D22	D21	300.8	287.0	230'	18"
22	D20	D22	306.8	301.0	30'	18"
23	D21	BASIN 1	286.8	285.0	50'	18"
24	D26	BASIN 2	307.5	285.0	650'	24"
25	D6	D26	326.8	308.0	110'	18"
26	D16	BASIN 1	286.5	284.0	440'	24"
27	D11	BASIN 2	286.5	285.0	90'	24"

SWALE & DROP INLET SCHEDULE

SWALE	DROP INLET	LENGTH	BEGINNING SWALE ELEV.	DROP INLET TOP ELEV.	DROP INLET BOTTOM ELEV.
1A	SWALE 42	280'	372.25	–	–
1B	D1	50'	370.25	370.0	366.0
2A	SWALE 42	70'	352.75	–	–
2B	D2	400'	352.00	350.0	346.0
3	D3	600'	333.00	330.0	326.0
4	D4	450'	372.25	370.0	366.0
5	D5	550'	352.75	350.0	346.0
6	D6	650'	333.25	330.0	326.0
7	D4	190'	370.95	370.0	366.0
8	D5	250'	351.25	350.0	346.0
9	D6	350'	331.75	330.0	326.0
10	D7	180'	370.90	370.0	366.0
11	D8	250'	351.25	350.0	346.0
12	D9	320'	331.60	330.0	326.0
13	D10	750'	321.50	310.0	306.0
14	D7	230'	371.15	370.0	366.0
15	D8	260'	351.30	350.0	346.0
16	D9	290'	331.45	330.0	326.0
17	D10	310'	311.55	310.0	306.0
18	D11	340'	291.70	290.0	286.0
19	D12	230'	371.15	370.0	366.0
20	D13	260'	351.30	350.0	346.0
21	D14	275'	331.38	330.0	326.0
22	D15	310'	311.55	310.0	306.0
23	D16	330'	291.65	290.0	286.0
24	D12	220'	371.10	370.0	366.0
25	D13	290'	351.45	350.0	346.0
26	D14	350'	331.75	330.0	326.0
27	D15	400'	312.00	310.0	306.0
28	D16	310'	291.55	290.0	286.0
29	D17	230'	371.15	370.0	366.0
30	D18	290'	351.45	350.0	346.0
31	D19	360'	331.80	330.0	326.0
32	D20	420'	312.10	310.0	306.0
33	D21	300'	291.50	290.0	286.0
34	D17	410'	372.05	370.0	366.0
35	D18	530'	352.65	350.0	346.0
36	D19	630'	333.15	330.0	326.0
37	D1	400'	372.00	370.0	366.0
38	D2	510'	352.55	350.0	346.0
39	D3	600'	333.00	330.0	326.0
40	D23,24,25	1440'	320.00	23 303.7 24 302.5 25 300.0	23 301.7 24 301.5 25 302.0
41	D11	235'	291.18	290.0	286.0
42	D26	1000'	370.00	311.5	307.5

LEGEND

- PROPERTY LINE
- STREAM
- S 10 — DRAINAGE SWALE
- S 42 — ROADWAY SWALE
- SILT FENCE
- P 2 — DRAINAGE PIPE
- DRAINAGE DIRECTION ARROW
- 26 DROP INLET
- INTERNAL STORM WATER COLLECTION SUMP
- BENCHMARK
- MW-1 EXISTING MONITOR WELL
- PMW-4 PROPOSED MONITOR WELL
- B-10 SOIL BORINGS PERFORMED 1991 (BY ENSCI CORP.)
- B-9 PIEZOMETER INSTALLED 1991
- 280 EXISTING GROUND SURFACE CONTOURS
- 312 PROPOSED EARTHWORK CONTOURS

TOPOGRAPHIC SURVEY BY

PHOTO SCIENCE INC.
GREENSBORO, N.C.

SURVEY FLOWN 2-1-91

RISER/BARREL SCHEDULE

BASIN	RISER HEIGHT	RISER DIAMETER	BARREL DIAMETER	BARREL LENGTH
1	5'	24"	18"	210'
2	5'	18"	12"	275'

NOTE: SEE SHEETS 28 AND 29 FOR BASIN DETAILS

0 50 100 200 300 400 500
25 75

SCALE: 1"=100'

NORTH CAROLINA PROFESSIONAL SEAL 8895 ENGINEER GREGORY N. RICHARDSON

NO.	DATE	DESCRIPTION	BY

HAZEN AND SAWYER
Environmental Engineers & Scientists

SEDIMENTATION AND EROSION CONTROL PLAN

HALIFAX COUNTY ASH MONOFILL

SCALE 1"=100'	DRAWN BY: JDB	CHECKED BY: GNR
JOB NO. 3720	DATE: 2-92	PAGE 18 OF 29

FILENAME: H3ECL.DWG

SECTION A-A

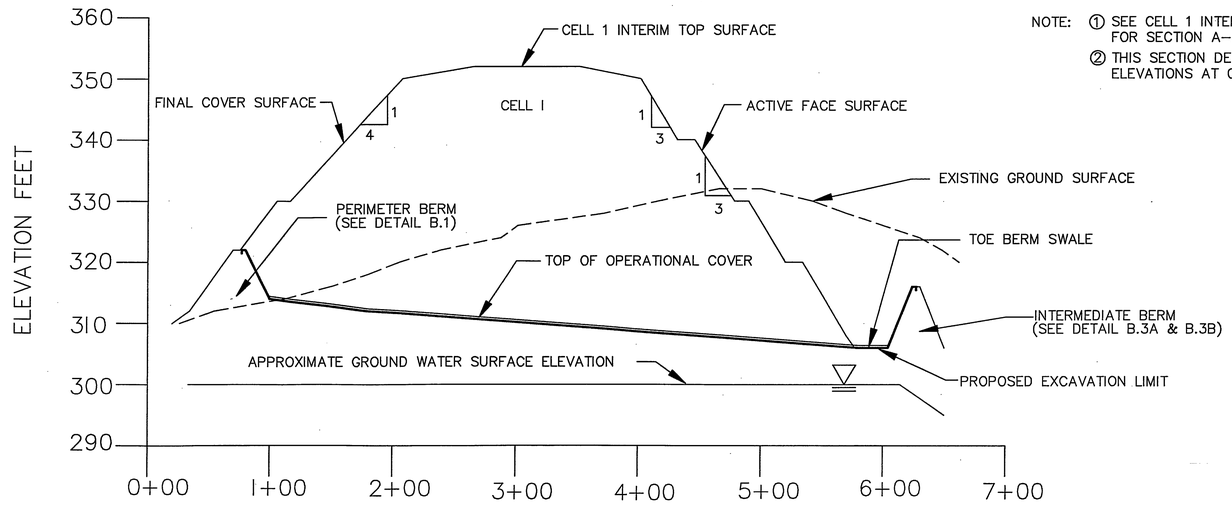

NOTE: ① SEE CELL 1 INTERIM COVER (SHEET 7) FOR SECTION A–A LOCATION
② THIS SECTION DEPICTS ASH PLACEMENT ELEVATIONS AT COMPLETION OF CELL 1.

LEGEND

60 MIL HDPE LINER

B-2 BORING LOCATIONS

SECTION B-B

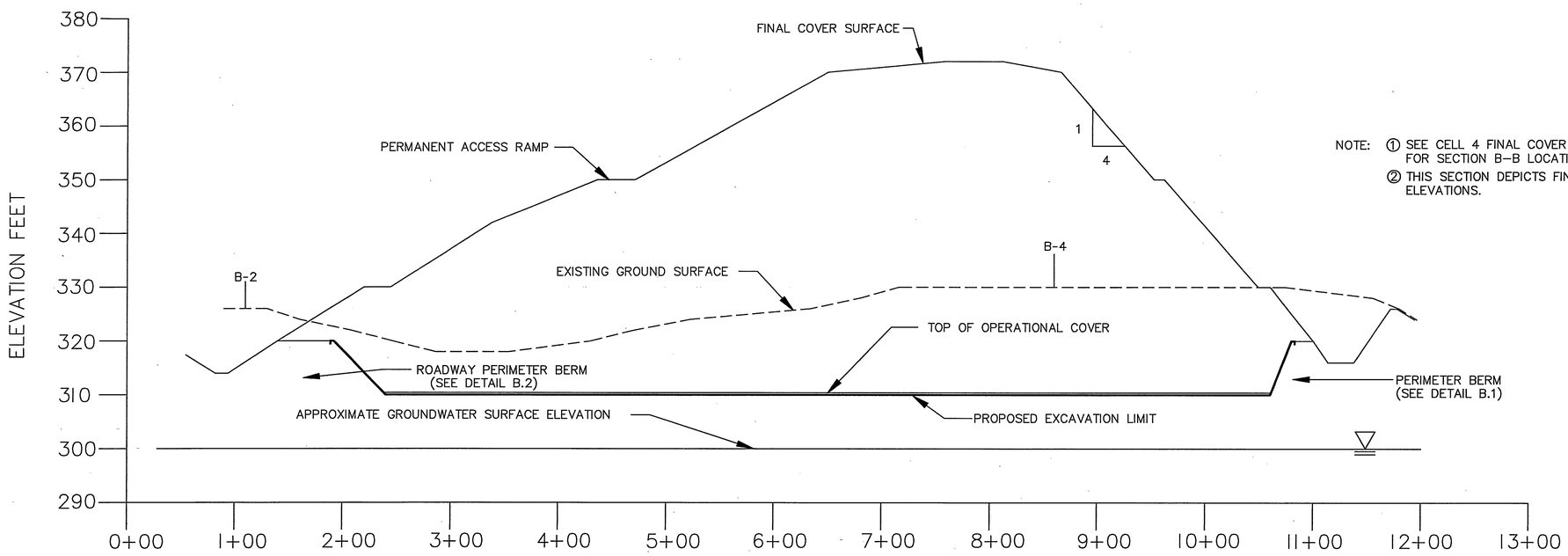

NOTE: ① SEE CELL 4 FINAL COVER (SHEET 16) FOR SECTION B–B LOCATION
② THIS SECTION DEPICTS FINAL COVER ELEVATIONS.

NOTE: FOR BORING DETAILS SEE DESIGN REPORT

NO.	DATE	DESCRIPTION	BY

HAZEN AND SAWYER
Environmental Engineers & Scientists

SECTIONS A & B

HALIFAX COUNTY ASH MONOFILL

SCALE	DRAWN BY:	CHECKED BY:
AS SHOWN	SAS	GNR
JOB NO. 3720	DATE: 2–92	PAGE 19 OF 29

SECTION C-C

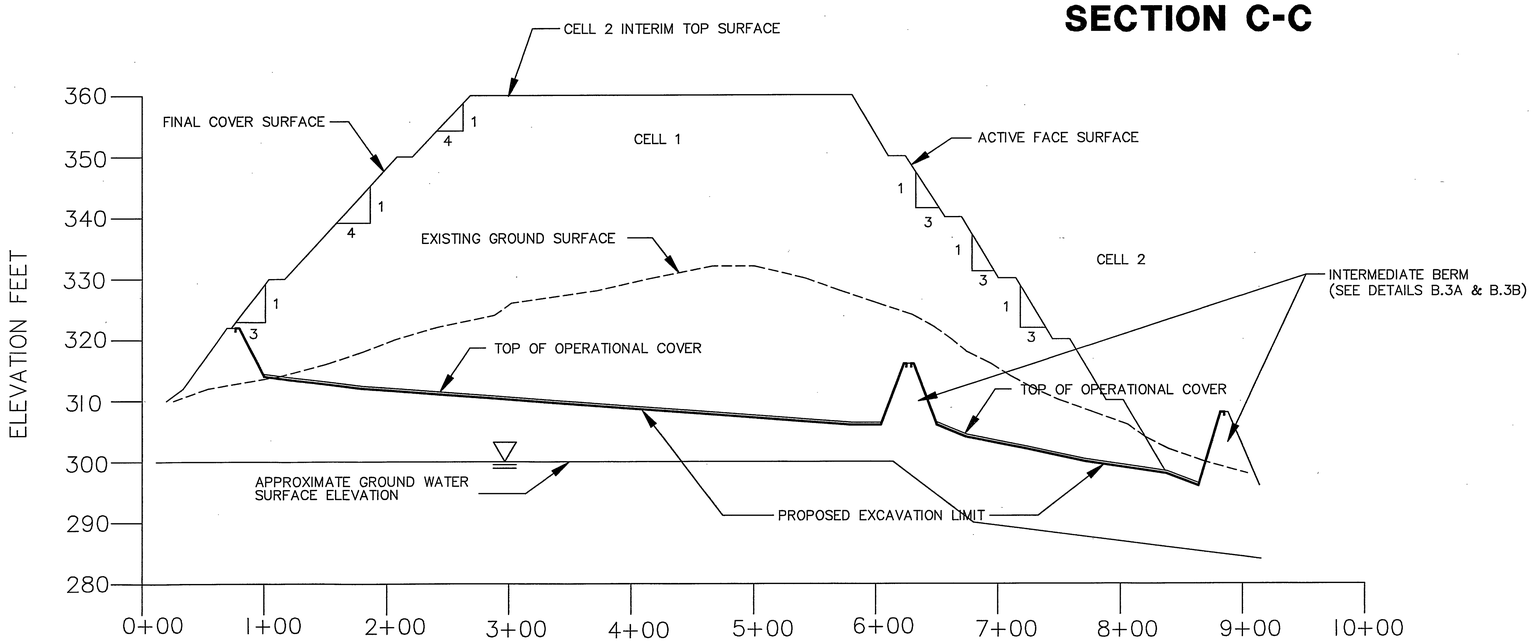

NOTE: ① SEE CELL 2 INTERIM COVER (SHEET 10) FOR SECTION C–C LOCATION.
② THIS SECTION DEPICTS ASH PLACEMENT ELEVATIONS FOR CELL 2.

LEGEND

60 MIL HDPE LINER

B-2 BORING LOCATIONS

SECTION D-D

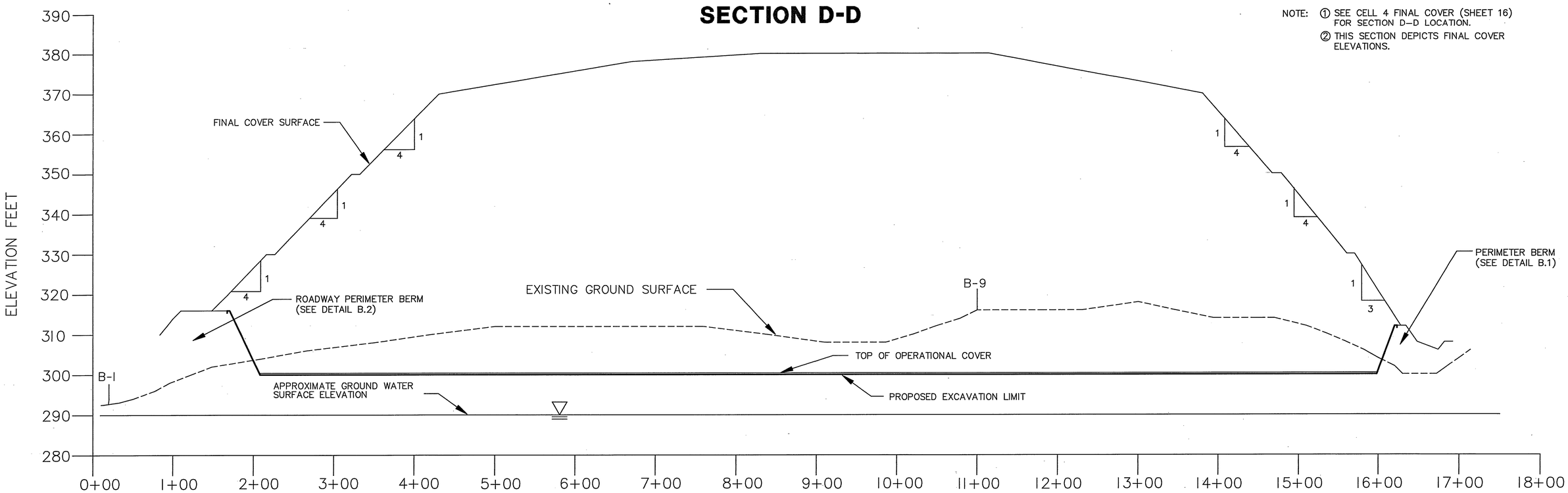

NOTE: ① SEE CELL 4 FINAL COVER (SHEET 16) FOR SECTION D–D LOCATION.
② THIS SECTION DEPICTS FINAL COVER ELEVATIONS.

NOTE: FOR BORING DETAILS SEE DESIGN REPORT

NORTH CAROLINA PROFESSIONAL SEAL 8895 ENGINEER GREGORY N. RICHARDSON

NO.	DATE	DESCRIPTION	BY

HAZEN AND SAWYER
Environmental Engineers & Scientists

SECTIONS C & D

HALIFAX COUNTY ASH MONOFILL

SCALE: AS SHOWN	DRAWN BY: SAS	CHECKED BY: GNR
JOB NO. 90-001	DATE: 2-92	PAGE 20 OF 29

SECTION E-E

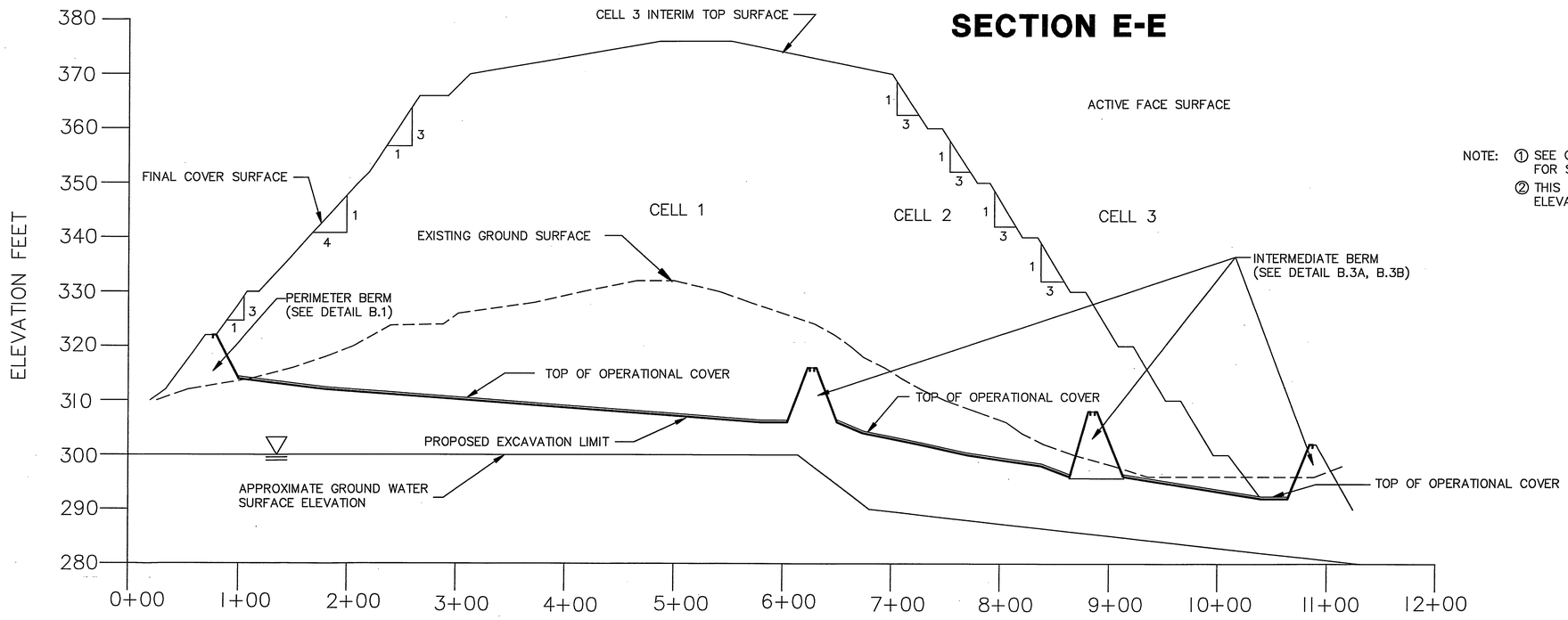

NOTE: ① SEE CELL 3 INTERIM COVER (SHEET 13) FOR SECTION E–E LOCATION.
② THIS SECTION DEPICTS ASH PLACEMENT ELEVATIONS AT COMPLETION OF CELL2.

LEGEND

60 MIL HDPE LINER

B-2 BORING LOCATIONS

SECTION F-F

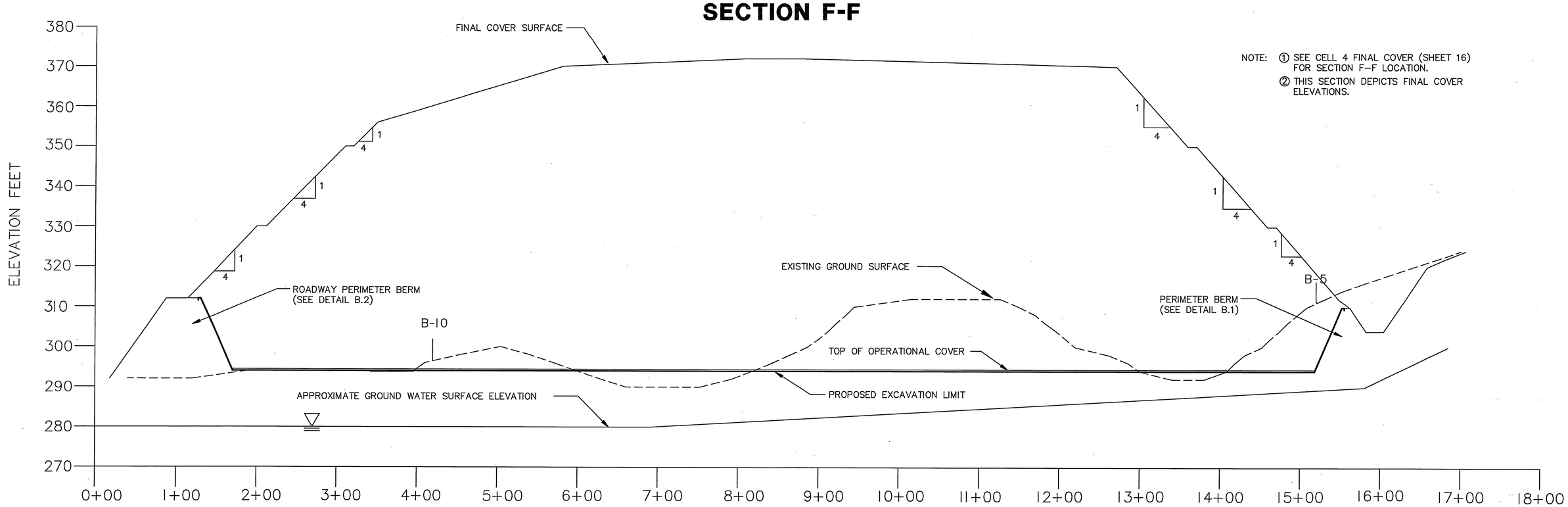

NOTE: ① SEE CELL 4 FINAL COVER (SHEET 16) FOR SECTION F–F LOCATION.
② THIS SECTION DEPICTS FINAL COVER ELEVATIONS.

NOTE: FOR BORING DETAILS SEE DESIGN REPORT

NORTH CAROLINA PROFESSIONAL SEAL 3895 ENGINEER GREGORY N. RICHARDSON

NO.	DATE	DESCRIPTION	BY

HAZEN AND SAWYER
Environmental Engineers & Scientists

SECTIONS E & F

HALIFAX COUNTY ASH MONOFILL

SCALE	DRAWN BY:	CHECKED BY:
AS SHOWN	SAS	GNR
JOB NO. 3720	DATE: 2-92	PAGE 21 OF 29

SECTION G-G

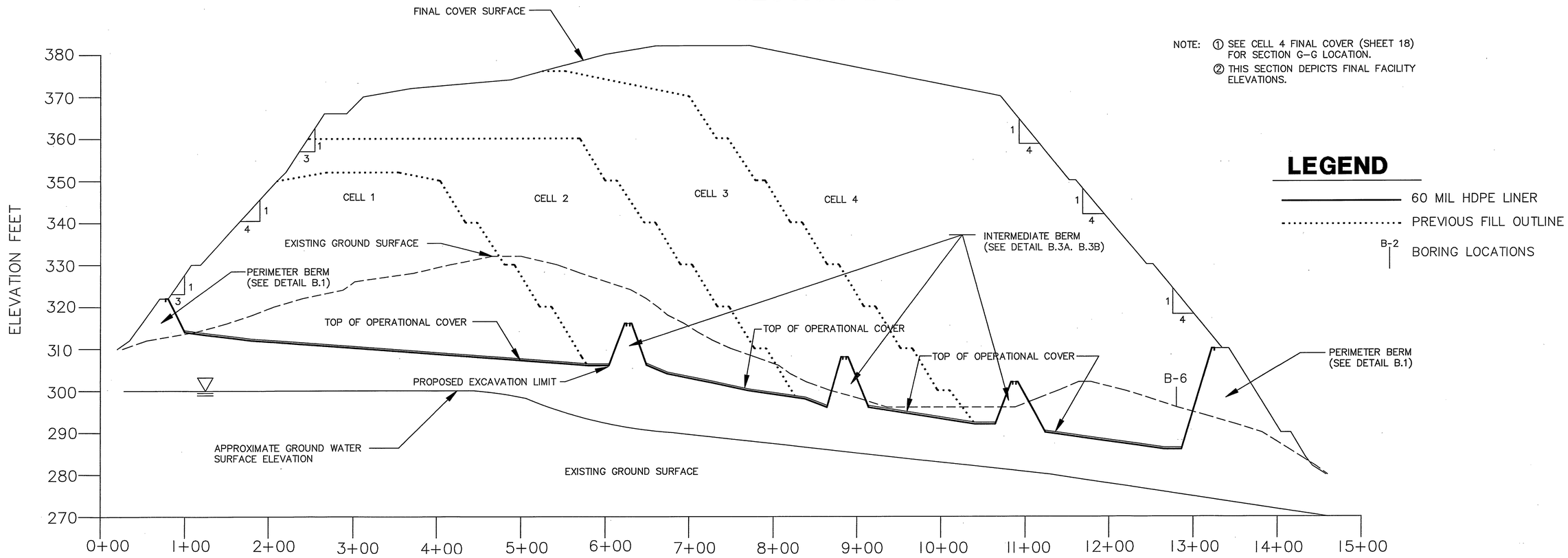

SECTION H-H

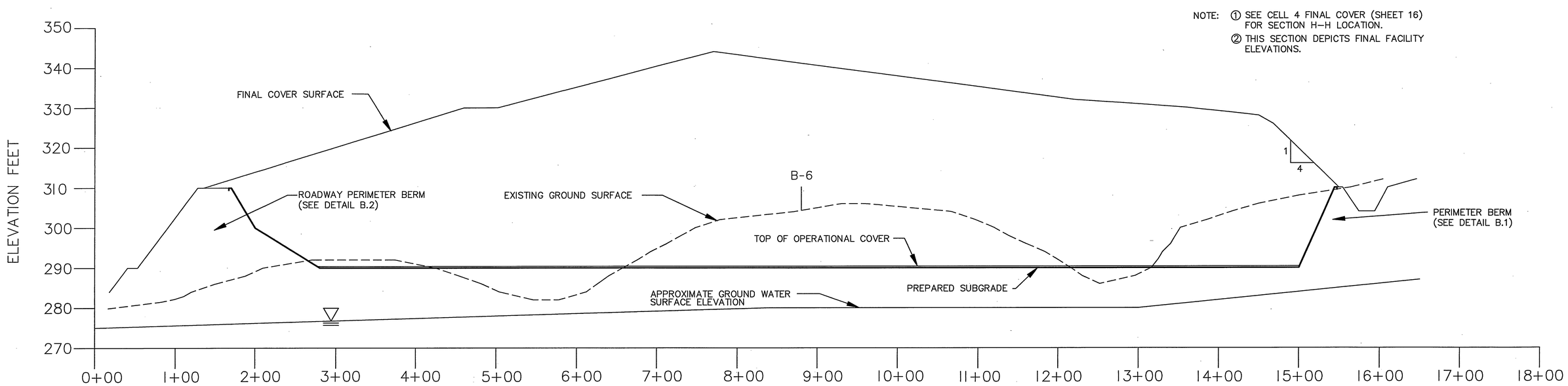

NOTE: FOR BORING DETAILS SEE DESIGN REPORT

NO.	DATE	DESCRIPTION	BY

HAZEN AND SAWYER
Environmental Engineers & Scientists

SECTIONS G & H

HALIFAX COUNTY ASH MONOFILL

SCALE	DRAWN BY:	CHECKED BY:
AS SHOWN	SAS	GNR
JOB NO. 3720	DATE: 2-92	PAGE 22 OF 29

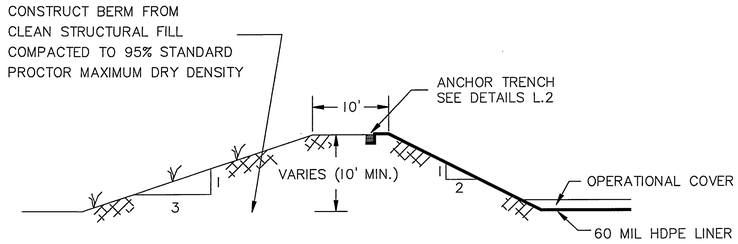

NOTE: 1. HEIGHT OF BERM VARIES AROUND PERIMETER OF FACILITY. SEE APPROPRIATE GRADING PLAN FOR EXACT BERM HEIGHT.
2. THIS DETAIL IS USED ON THE NORTH, SOUTH, AND EAST PERIMETER BERMS. SEE GRADING PLANS.

B.1 / 4 PERIMETER BERM (TYP.)
NTS

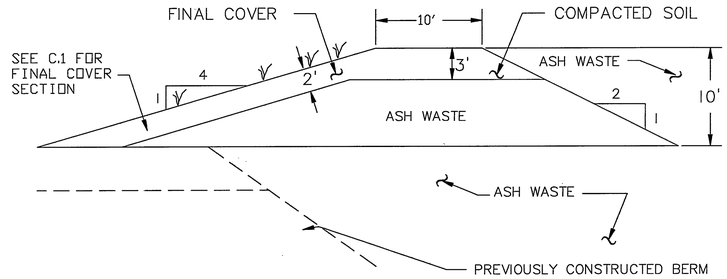

NOTES: 1. THIS DETAIL FOR USE IN EXPANDING CELL 4 ABOVE THE PERIMETER BERM
2. CONSTURCT BERM PRIOR TO COMPLETION OF THE PREVIOUS 10' ASH LIFT

B.4 / 16 SOIL/ASH EXPANSION BERM
NTS

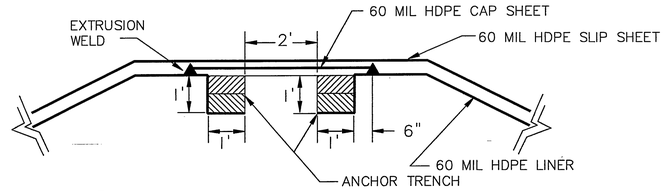

L.5 / 23 CAP SHEET CROSS-SECTION
NTS

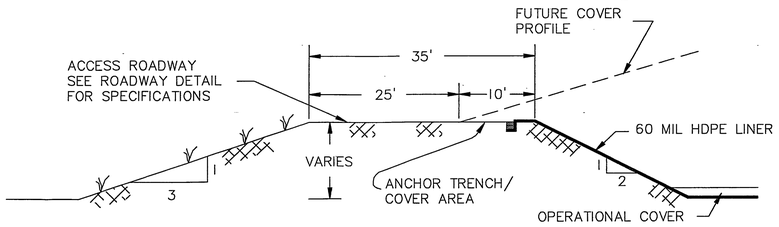

NOTES: 1. HEIGHT OF BERM VARIES. SEE APPROPRIATE GRADING PLAN FOR EXACT BERM HEIGHT
2. THIS DETAIL IS USED ON THE WEST PERIMETER BERM ONLY. SEE GRADING PLANS

B.2 / 4 PERIMETER BERM W/ACCESS ROADWAY
NTS

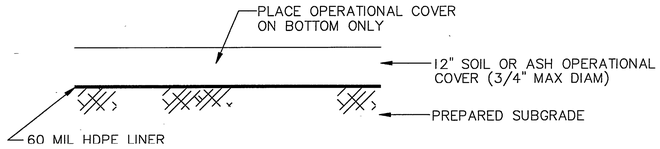

NOTE: 1. SUBGRADE SHALL BE STRUCTURALLY SOUND, FREE OF STONES LARGER THAN 1/2" DIA. AND SMOOTH DRUM ROLLLED PRIOR TO PLACEMENT OF 60 MIL HDPE SHEET

2. OPERATIONAL COVER SHALL BE ON SITE SOILS IN CELL 1. CELL 2 AND 3 SHALL USE SOIL IN A 50' STRIP ALONG THE INTERMEDIATE BERM AND ASH ELSWHERE. CELL 4 SHALL USE SOIL IN A 50' STRIP ALONG THE SOUTH PERIMETER BERM ANS ASH ELSEWHERE. (SEE OPERATIONAL COVER PLAN)

3. OPERATIONAL COVER SHALL BE PLACED UDING A LGP (6 PSI MAX.) D-3DOZER OR EQUIVALENT. COMPACT COVER BY "TRACKING IN" WITH DOZER. NO RUBBER TIRED VEHICLES OR COMPACTION EQUIPMENT SHALL BE ALLOWED ON BOTTOM PRIOR TO PLACEMENT OF ENTIRE 12" COVER LIFT.

L.1 / 5 TYPICAL LINER SECTION
NTS

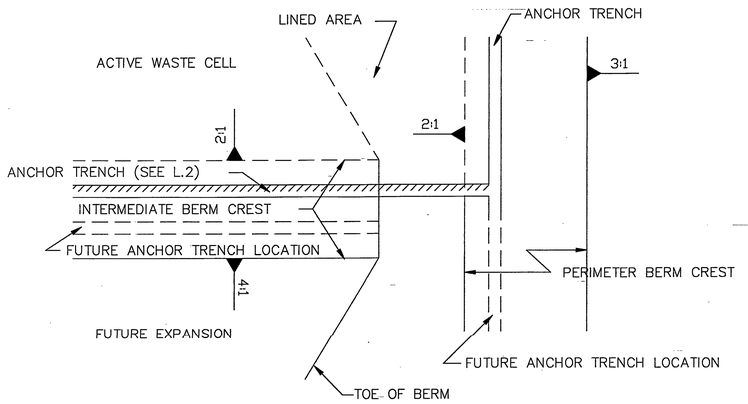

L.3 / 6 ANCHOR DETAIL AT PERIMETER & INTERMEDIATE BERM INTERSECTION. (PRE-EXPANSION)
NTS

FUTURE CELL ACTIVE CELL

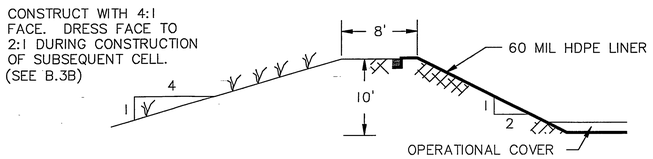

B.3A / 6 INTERMEDIATE BERM (PRE-EXPANSION)
NTS

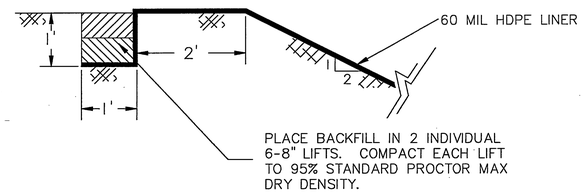

L.2 / 4 ANCHOR TRENCH DETAIL
NTS

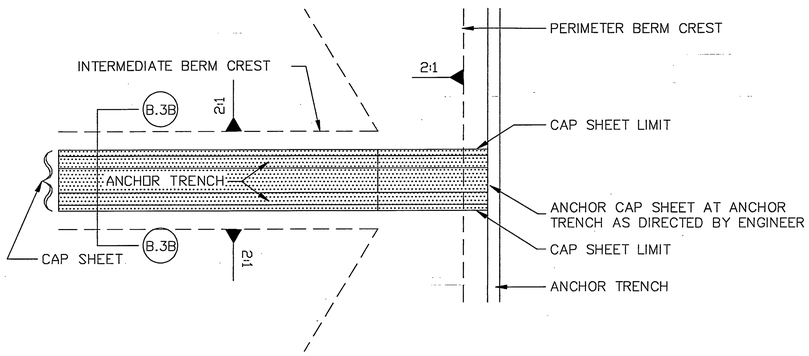

NOTE: HDPE SLIPSHEET NOT SHOWN FOR CLARITY

L.4 / 4 ANCHOR DETAIL AT PERIMETER & INTERMEDIATE BERM INTERSECTION. (POST-EXPANSION)
NTS

NEWLY CONSTRUCTED CELL ACTIVE CELL

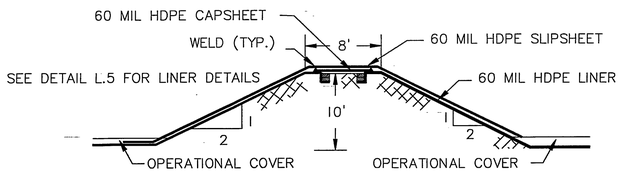

B.3B / 4 INTERMEDIATE BERM (POST-EXPANSION)
NTS

NORTH CAROLINA PROFESSIONAL SEAL 8895 ENGINEER GREGORY N. RICHARDSON

NO.	DATE	DESCRIPTION	BY

HAZEN AND SAWYER
Environmental Engineers & Scientists

DETAILS

HALIFAX COUNTY ASH MONOFILL

SCALE	DRAWN BY:	CHECKED BY:
NTS	BEK	GNR
JOB NO. 3720	DATE: 2-92	PAGE 23 OF 29

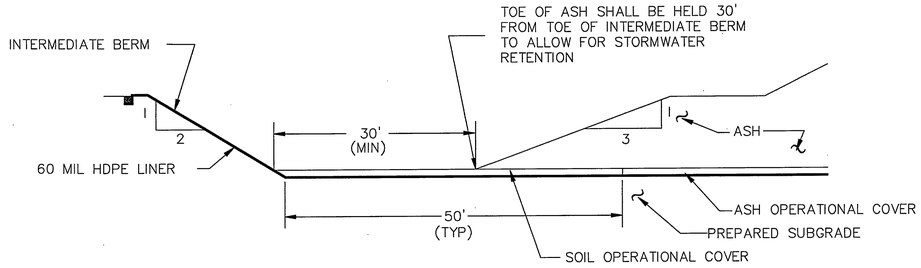

NOTE: OPERATIONAL COVER TRANSITIONS FROM SOIL TO ASH IN CELLS 2, 3, 4 ONLY. OPERATIONAL COVER IN CELL 1 CONSISTS OF SOIL ONLY.

S.1 / 8 TOE BASIN SCHEMATIC
NTS

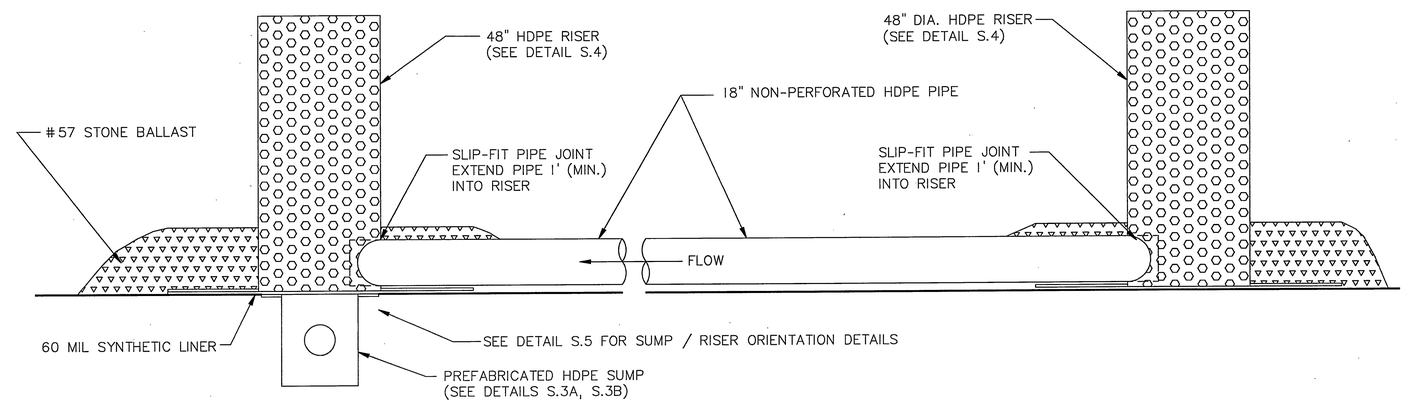

NOTE: RISER LOCATIONS ARE SHOWN ON EXCAVATION PLANS

S.2 / 6 RISER / LATERAL /SUMP SCHEMATIC
NTS

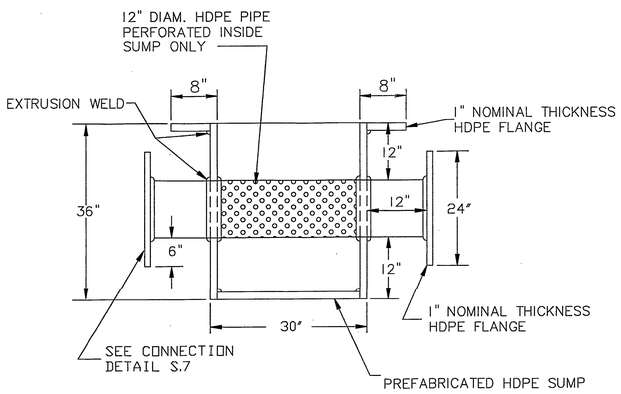

NOTE: EXTRUSION WELD ALL JOINTS.

SIDE VIEW

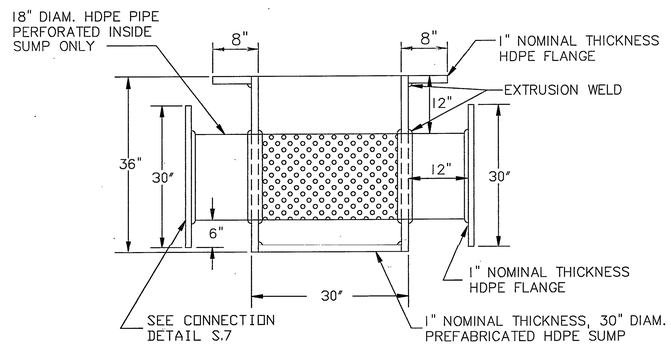

NOTE: EXTRUSION WELD ALL JOINTS.

SIDE VIEW

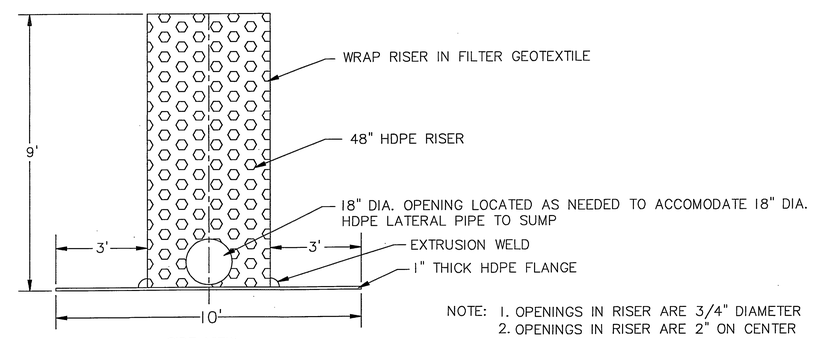

NOTE: 1. OPENINGS IN RISER ARE 3/4" DIAMETER
2. OPENINGS IN RISER ARE 2" ON CENTER

SIDE VIEW

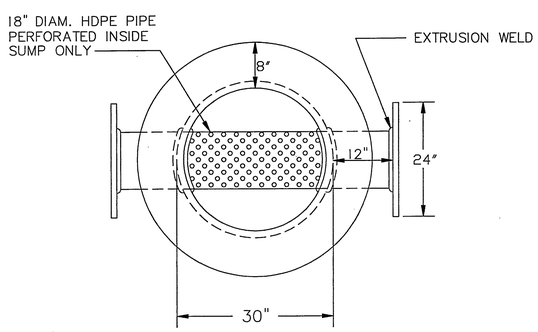

TOP VIEW

S.3A / 6 PREFABRICATED HDPE SUMP DETAIL
NTS

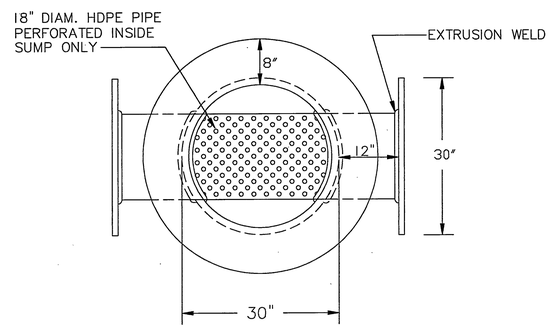

TOP VIEW

S.3B / 15 PREFABRICATED HDPE SUMP DETAIL
NTS

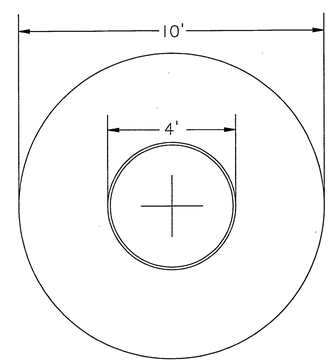

TOP VIEW

S.4 / 6 INTERNAL DRAINAGE SYSTEM RISER DETAIL
NTS

SUMP SCHEDULE

SUMP	CENTER COORDINATES N	CENTER COORDINATES E	ELEVATION OF TOP	ELEVATION OF BOTTOM
1	959098.5	2350150.0	306.5	303.5
2	958867.1	2349994.8	298.5	295.5
3	958686.1	2349873.9	292.5	289.5
4	958399.5	2350196.0	286.5	283.5

HEADER PIPE LAYOUT INFORMATION

PIPE	DIA.	FROM	TO	UPSTREAM INVERT	DOWNSTREAM INVERT	LENGTH
1	12"	SUMP 1	SUMP 2	304.5	296.5	284'
2	12"	SUMP 2	SUMP 3	296.5	290.5	218'
3	12"	SUMP 3	BASIN	290.5	284.5	222'
4	24"	SUMP 4	BASIN	284.0	281.0	527'

NORTH CAROLINA PROFESSIONAL SEAL 8895 ENGINEER GREGORY N. RICHARDSON

NO.	DATE	DESCRIPTION	BY

HAZEN AND SAWYER
Environmental Engineers & Scientists

DETAILS
HALIFAX COUNTY ASH MONOFILL

SCALE	DRAWN BY:	CHECKED BY:
NTS	BEK	GNR
JOB NO. 3720	DATE: 2-92	PAGE 24 OF 29

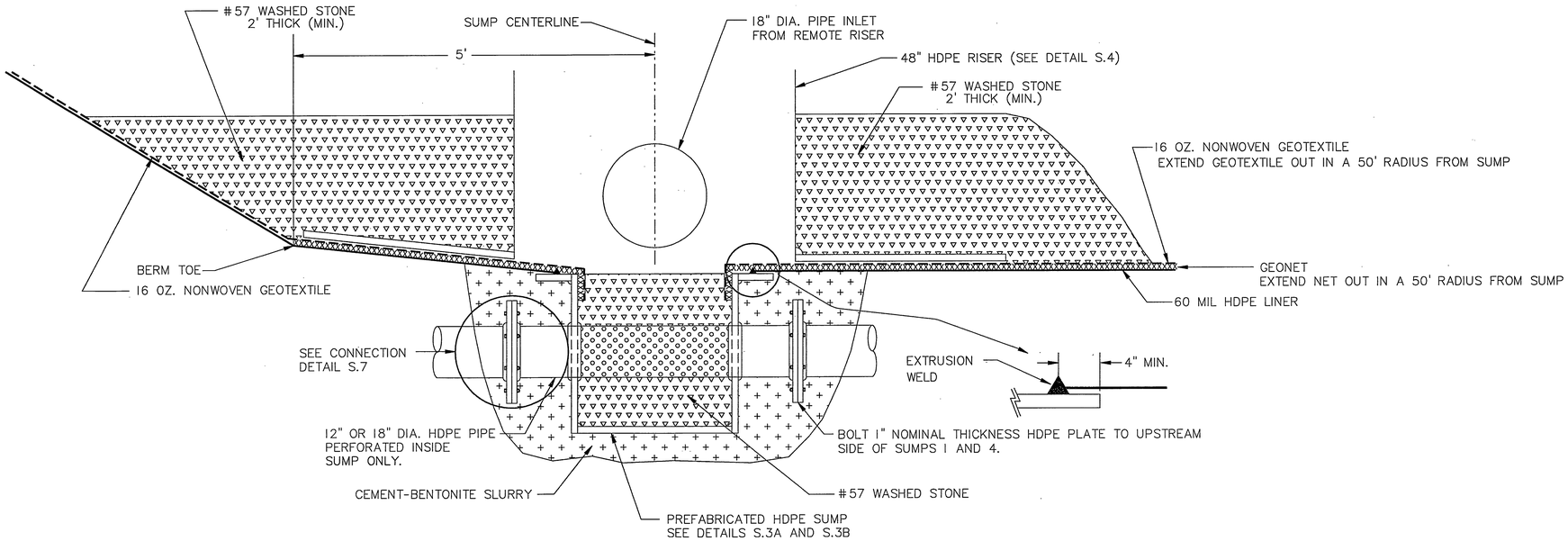

NOTES: 1. PLACE SUMP CENTER 5' FEET FROM TOE OF BERM
2. THE #57 STONE OUTSIDE OF THE SUMP WILL BE PLACED A MINIMUM OF 2' THICK OVER THE RISER FLANGE ONLY.

S.5 / 6 SUMP/RISER DETAIL
NTS

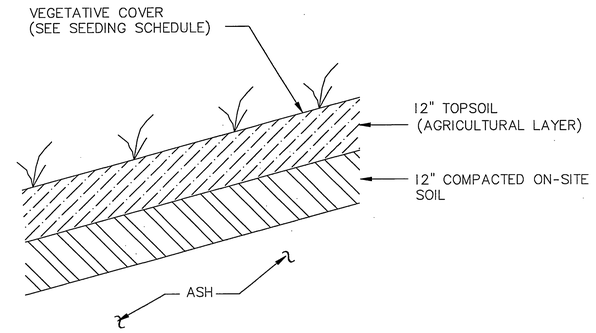

C.1 / 8 CAP SECTION (TYP)
NTS

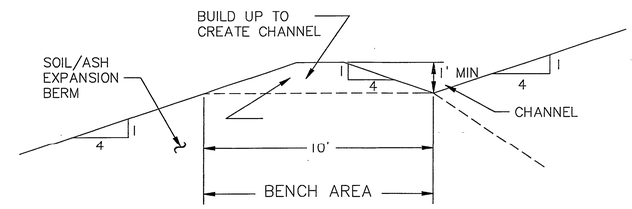

C.2 / 8 CAP SWALES & BENCH
NTS

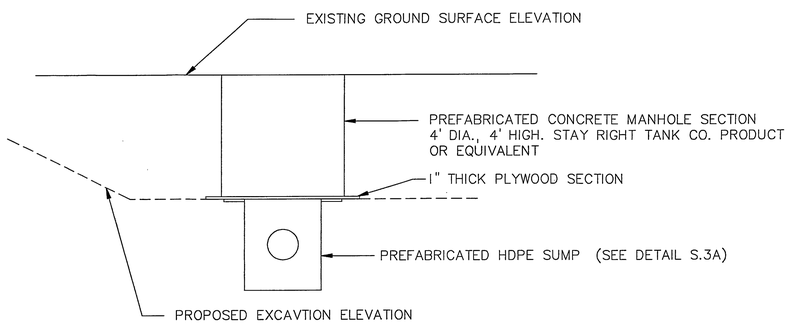

NOTES: 1. THIS DETAIL FOR USE ON SUMPS 2 AND 3 AFTER CONSTRUCTION OF LEACHATE REMOVAL LINE
2. INSTALL PROTECTIVE COVER AS SOON AS POSSIBLE AFTER SUMP INSTALLATION
3. INSTALL TEMPORARY 60 MIL HDPE SEAL ACROSS SUMP FLANGE PRIOR TO THE LINER INSTALLATION AS REQUIRED BY THE ENGINEER

S.6 / 6 TEMPORARY SUMP PROTECTION DETAIL
NTS

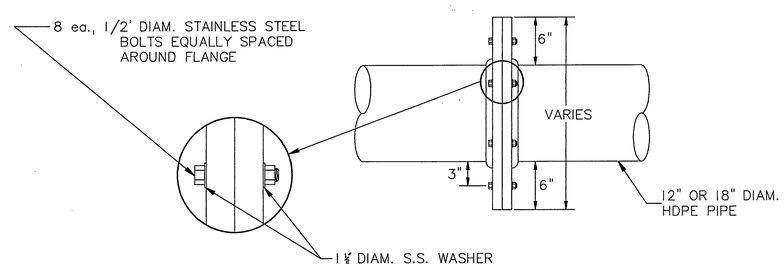

S.7 / 25 PIPE FLANGE CONNECTION DETAIL
NTS

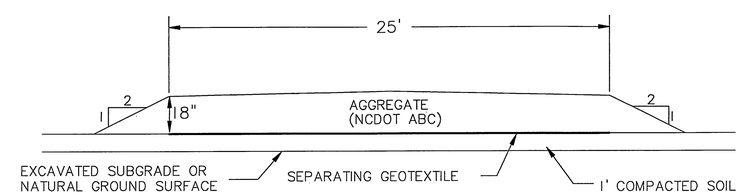

NOTE: CROWN ROADWAY SUBGRADE TO PROVIDE DRAINAGE

R.1 / 6 TYPICAL ALL-WEATHER ACCESS ROAD
NTS

NORTH CAROLINA PROFESSIONAL SEAL 8895 ENGINEER GREGORY N. RICHARDSON

NO.	DATE	DESCRIPTION	BY

HAZEN AND SAWYER
Environmental Engineers & Scientists

DETAILS
HALIFAX COUNTY ASH MONOFILL

SCALE	DRAWN BY:	CHECKED BY:
NTS	BEK	GNR
JOB NO. 3720	DATE: 2-92	PAGE 25 OF 29

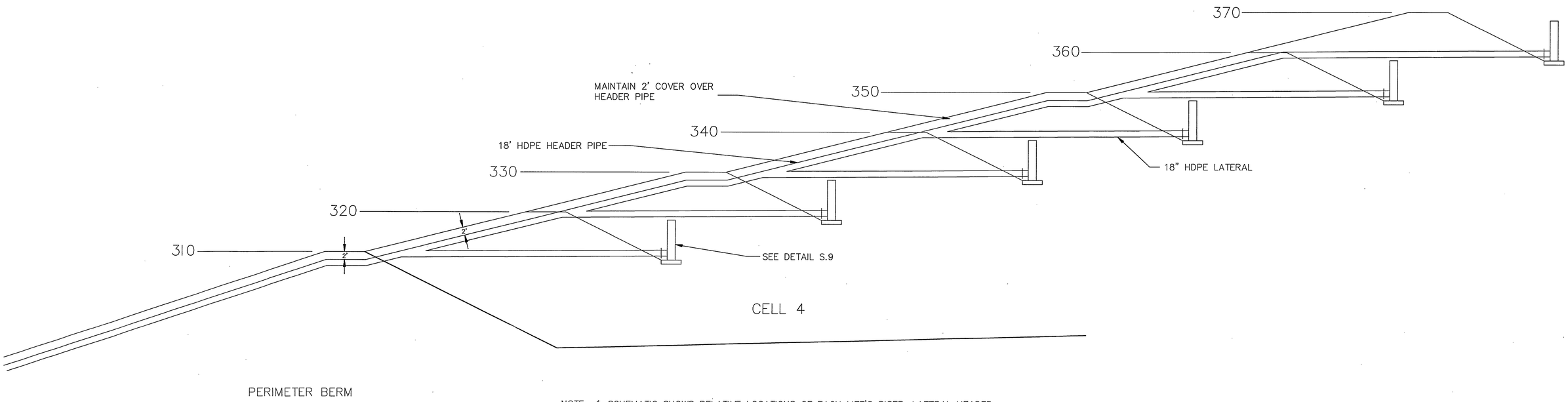

NOTE: 1. SCHEMATIC SHOWS RELATIVE LOCATIONS OF EACH LIFT'S RISER, LATERAL HEADER. SEE CELL 4 FINAL CONTOURS (SHEET 16) FOR PLAN LOCATION OF HEATER PIPE

2. RISERS SHALL BE BURIED AS NEXT STAGE OF FILLING PROGRESSES.

S.8 / 17 CELL 4 RISER/HEADER SCHEMATIC
NTS

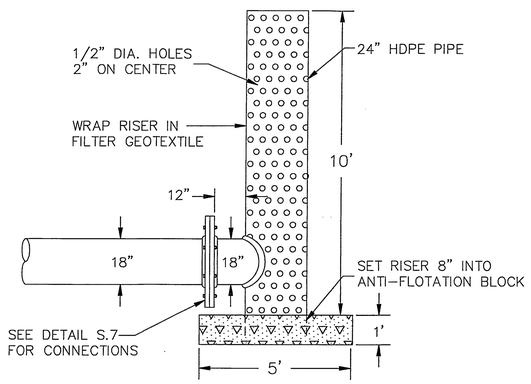

S.9 / 26 CELL 4 UPPER RISER
NTS

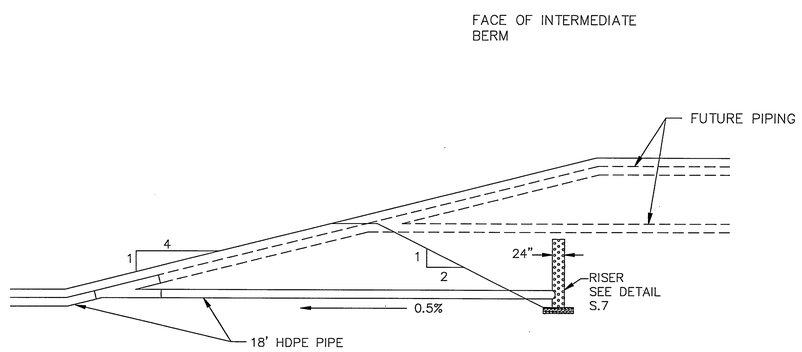

S.10 / 26 CELL 4 RISER/LATERAL DETAIL
NTS

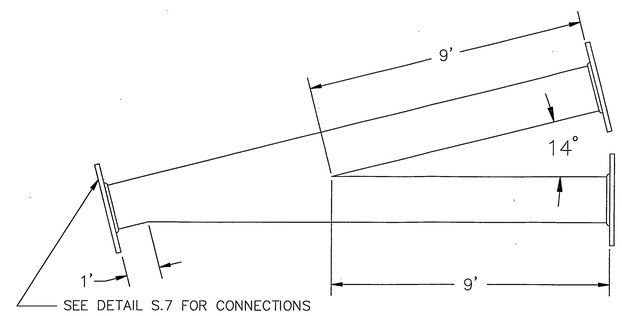

S.11 / 26 CELL 4 HEADER "Y"
NTS

NO.	DATE	DESCRIPTION	BY

NORTH CAROLINA PROFESSIONAL SEAL 8895 ENGINEER GREGORY N. RICHARDSON

HAZEN AND SAWYER
Environmental Engineers & Scientists

DETAILS
HALIFAX COUNTY ASH MONOFILL

SCALE	DRAWN BY:	CHECKED BY:
NTS	BEK	GNR
JOB NO. 3720	DATE: 2-92	PAGE 26 OF 29

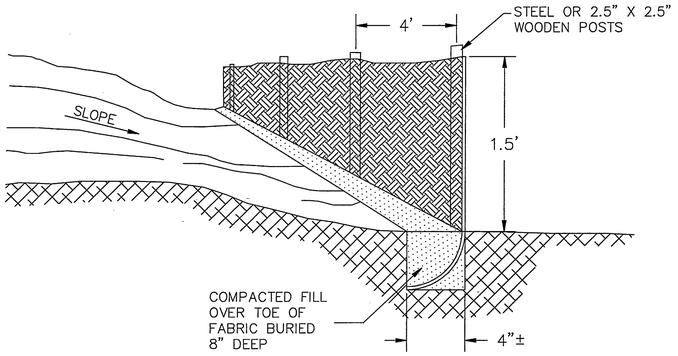

G.1 / 6 SILT FENCE DETAIL
NTS

SEEDING SCHEDULE

AGRICULTURAL LIMESTONE: 2 TON/ACRE
FERTILIZER: 10–10–10 AT 800–1000 LBS/ACRE
SUPERPHOSPHATE: 500 LBS/ACRE OF 20% ANALYSIS SUPERPHOSEPHATE
MULCH: 1.5 TONS SMALL GRAIN STRAW/ACRE (APPROX 60 BALES)
ANCHOR: CRIMP STRAW INTO SOIL WITH MACHINE OR TACK WITH LIQUID ASPHALT AT 400 GAL/ACRE OR EMULSIFIED ASPHALT AT 300 GAL./ACRE.

PLANTS & MIXTURES	RATES/ACRE	PLANTING DATES
TALL FESCUE	80–150 LBS/ACRE	AUG. 15 – OCT. 15
TALL FESCUE &	100 LBS/ACRE	FEB. 15 – APR. 30
TALL FESCUE &	50 LBS/ACRE	FEB. 15 – APR. 30
SERICEA LESPEOKZA	60 LBS/ACRE	NOV. 1 – FEB.
TALL FESCUE &	60 LBS/ACRE	JULY – AUGUST
BROWN TOP MILLET OR	30 LBS/ACRE	
SORGHUM–SUDAN HYBRIDE (MILLET & SORGUM MUST BE KEPT AT 10–12" MAXIMUM HEIGHT.)		
TALL FESCUE AND RYEGRAIN	70 LBS/ACRE	NOV. 1 – JAN.
	25 LBS/ACRE	
WEEPING LOVEGRASS	(KEEP ANNUAL CUTS TO 10–12")	
COMMON BERMUDAGRASS	5 LBS/ACRE	MAY 1 – JUNE
	8–12 LBS/ACRE (HULLED)	APR. 15 – JUNE 30
	15–20 LBS/ACRE (UNHULLED)	FEB. 1 – MARCH

CONSULT HALIFAX COUNTY, DIVISION OF SOIL SCIENCE, OR THE COUNTY AGICULTURAL AGENT ON MAINTENANCE TREATMENT AND FERTILIZATION AFTER PERMANENT COVER IS ESTABLISHED.

G.2 / 27 SEEDING SCHEDULE
NTS

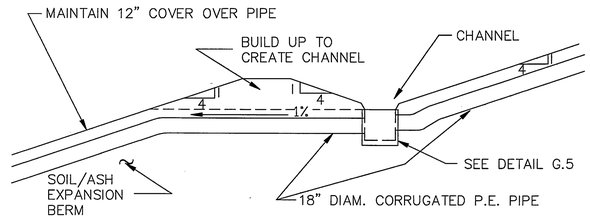

G.3 / 8 DROP INLET PIPING DETAIL
NTS

PIPE	D_o	Q	L_o	W	RIP-RAP D_{50}	APRON THICKNESS
20	24	27.1	17'	19'	7"	12"
23	18	22.4	14'	16'	5"	12"
24	24	20.1	13'	15'	5"	12"
26	24	20.4	13'	15'	5"	12"
27	24	19.5	13'	15'	5"	12"

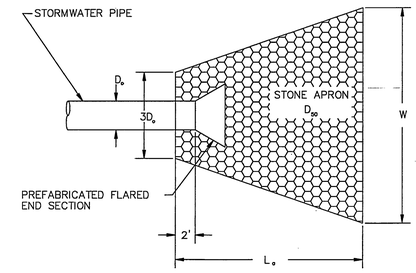

NOTES: 1. PER N.C. EROSION AND SEDIMENTATION CONTROL PLANNING AND DESIGN MANUAL
2. PLACE SEPARATING GEOTEXTILE BELOW RIP–RAP FOR ALL OUTLET APRONS

G.4 / 6 STORM WATER PIPE OUTLET DETAIL
NTS

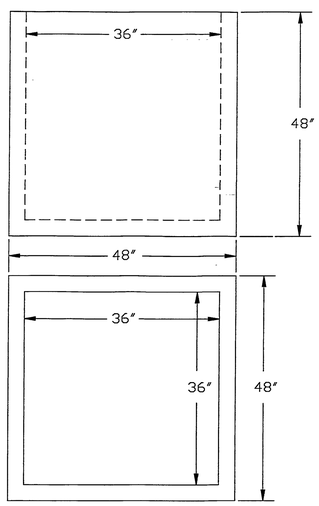

NOTES: 1. DROP INLETS SHALL BE STAY RIGHT TANK COMPANY 4X4X4 PREFABRICATED DROP INLETS OR EQUIVALENT.
2. DROP INLETS SHALL BE ABLE TO ACCEPT 18" OR 24" PIPES ON EITHER SIDE AS CALLED FOR IN THE PLANS.

DROP INLET	INLET PIPE DIA.	OUTLET PIPE DIA.
1	-	18"
2	18"	18"
3	18"	18"
4	-	18"
5	18"	18"
6	18"	18"
7	-	18"
8	18"	18"
9	18"	18"
10	18"	18"
11	18"	24"
12	-	18"
13	18"	18"
14	18"	18"
15	18"	18"
16	18"	24"
17	-	18"
18	18"	18"
19	18"	18"
20	18"	18"
21	18"	18"
22	18"	18"
23	24"	24"
24	24"	24"
25	24"	24"
26	18"	24"
27	18"	24"

G.5 / 6 PREFABRICATED DROP INLET STRUCTURE (TYPICAL DIMENSIONS)
NTS

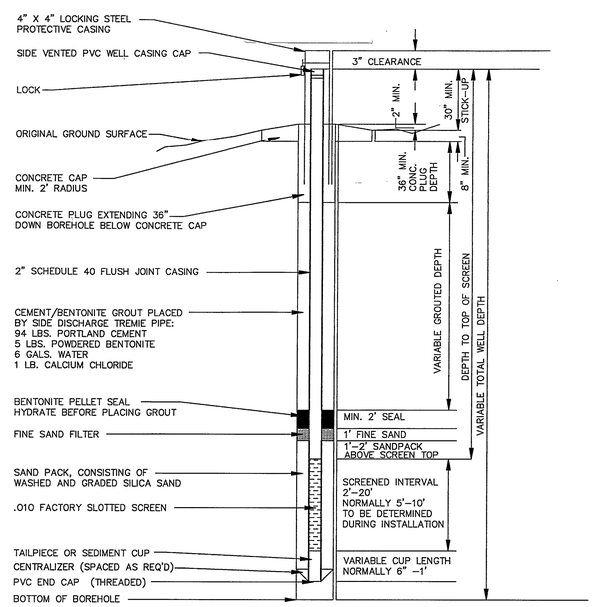

G.6 / 6 TYPICAL GROUND WATER MONITORING WELL DETAIL
NTS

NORTH CAROLINA PROFESSIONAL SEAL 8895 ENGINEER GREGORY N. RICHARDSON

NO.	DATE	DESCRIPTION	BY

HAZEN AND SAWYER
Environmental Engineers & Scientists

DETAILS
HALIFAX COUNTY ASH MONOFILL

SCALE	DRAWN BY:	CHECKED BY:
NTS	BEK	GNR
JOB NO. 3720	DATE: 2–92	PAGE 27 OF 29

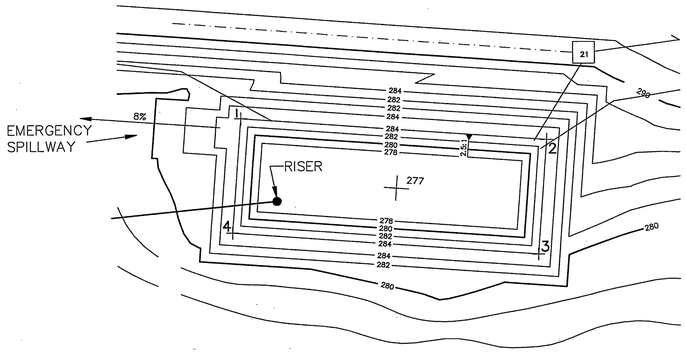

LAYOUT INFORMATION

CONTROL POINT	N	E
1	958190.54	2350531.53
2	958175.91	2350730.99
3	958101.11	2350725.51
4	958115.74	2350526.04
CENTER OF RISER	958135.04	2350553.23
BARREL OUTLET	958104.53	2350354.16

BASIN 1 GRADING DETAIL

NOTES: 1.CONTOURS DENOTE TOP OF EXCAVATION OR FILL ELEVATIONS
2. ALL BASIN SLOPES ARE AS FOLLOWS:
INSIDE SLOPE 2.5 H : 1 V
OUTSIDE SLOPE 3 H : 1 V
3. BASIN DETAILS ARE SHOWN ON SHEET 29

BASIN #2
LAYOUT INFORMATION

CONTROL POINT	N	E
1	958666.18	2349449.64
2	958505.73	2349505.82
3	958484.25	2349444.47
4	958644.70	2349388.29
CENTER OF RISER	958507.64	2349457.13
BARREL CORNER	958351.89	2349443.44
BARREL OUTLET	958259.85	2349527.78

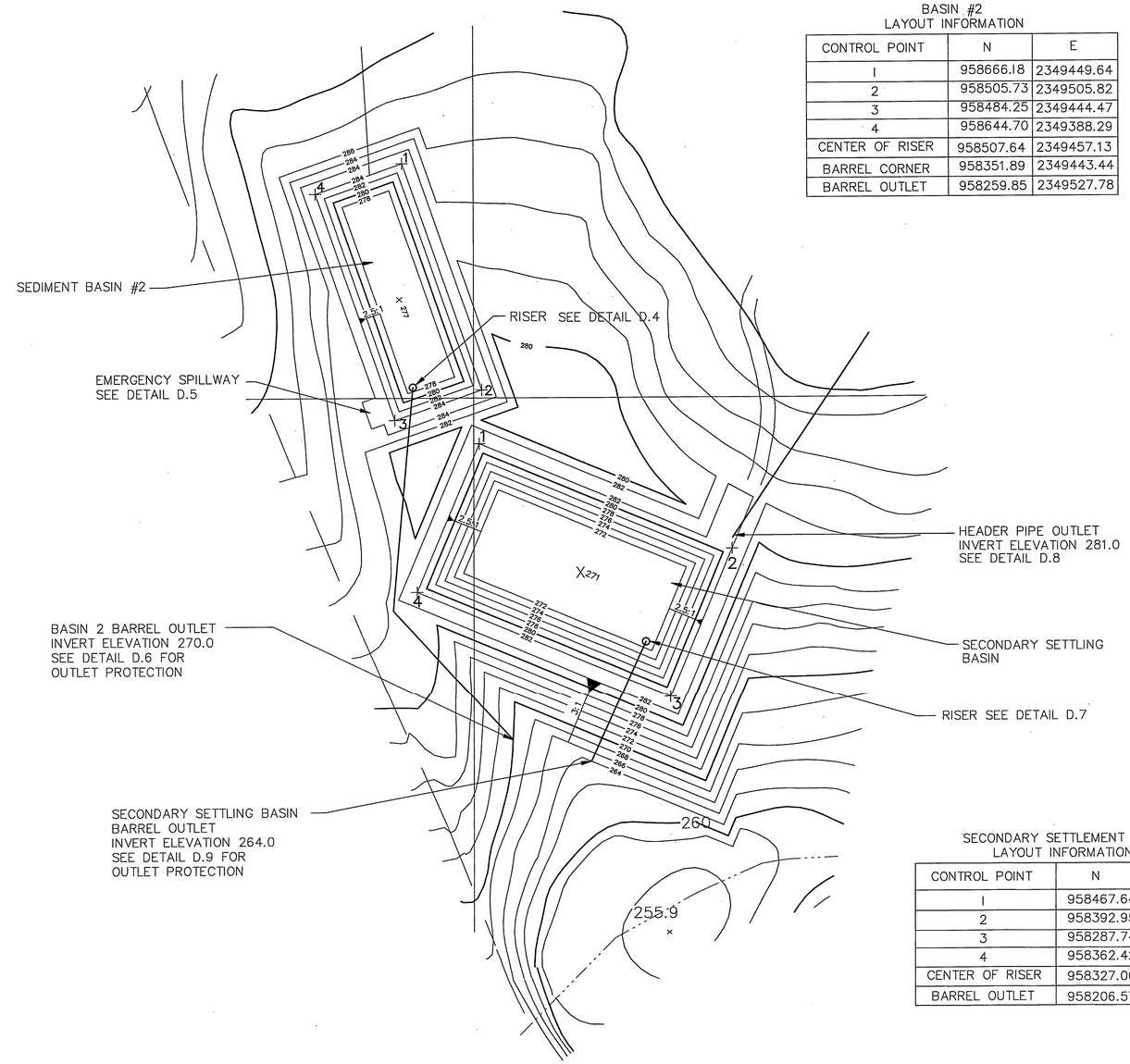

SECONDARY SETTLEMENT BASIN
LAYOUT INFORMATION

CONTROL POINT	N	E
1	958467.64	2349503.92
2	958392.95	2346682.96
3	958287.74	2349639.08
4	958362.42	2349460.03
CENTER OF RISER	958327.00	2349621.66
BARREL OUTLET	958206.57	2349567.31

BASIN 2 AND SECONDARY SETTLEMNET BASIN EXCAVATION PLAN

NO.	DATE	DESCRIPTION	BY

HAZEN AND SAWYER
Environmental Engineers & Scientists

BASIN EXCAVATION PLAN

HALIFAX COUNTY ASH MONOFILL

SCALE	DRAWN BY:	CHECKED BY:
1"=40'	BEK	GNR
JOB NO. 3720	DATE: 2-92	PAGE 28 OF 29

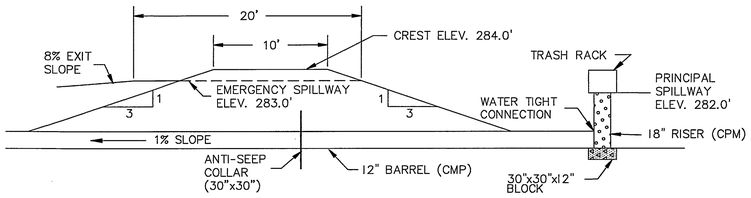

NOTE: PER N.C. EROSION AND SEDIMENTATION CONTROL PLANNING AND DESIGN MANUAL

D.1 / 28 BASIN 1 RISER/BARREL DETAIL
NTS

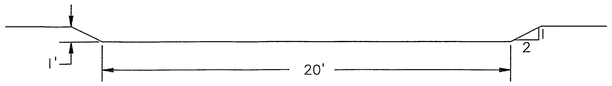

NOTE: PER N.C. EROSION AND SEDIMENTATION CONTROL PLANNING AND DESIGN MANUAL

D.2 / 28 BASIN 1 EMERGENCY SPILLWAY
NTS

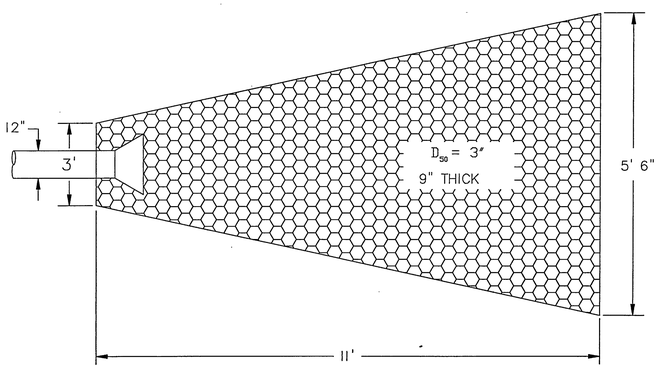

NOTE: PER N.C. EROSION AND SEDIMENTATION CONTROL PLANNING AND DESIGN MANUAL

D.3 / 28 BASIN 1 OUTLET PROTECTION
NTS

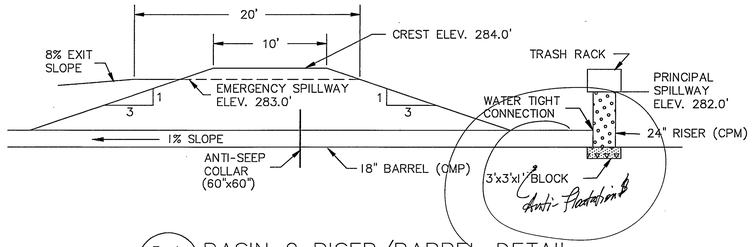

D.4 / 28 BASIN 2 RISER/BARREL DETAIL
NTS

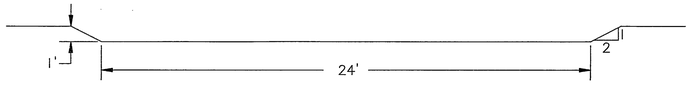

D.5 / 28 BASIN 2 EMERGENCY SPILLWAY CROSS-SECTION
NTS

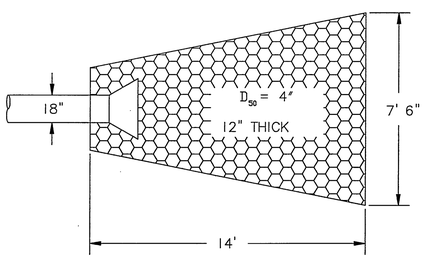

D.6 / 28 BASIN 2 OUTLET PROTECTION
NTS

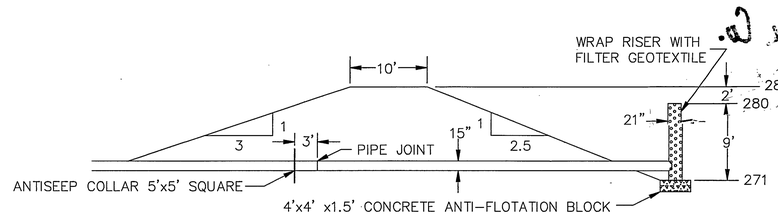

D.7 / 28 SECONDARY SETTLING BASIN RISER/BARREL DETAIL
NTS

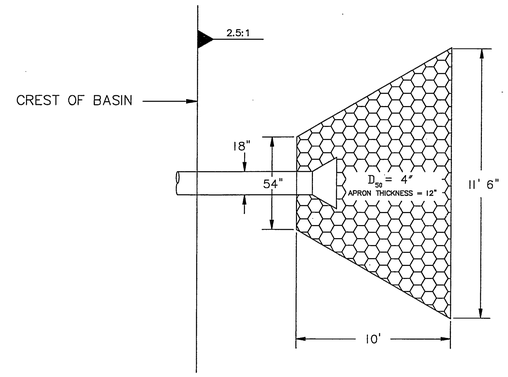

D.8 / 28 SECONDARY SETTLING BASIN INLET PROTECTION
NTS

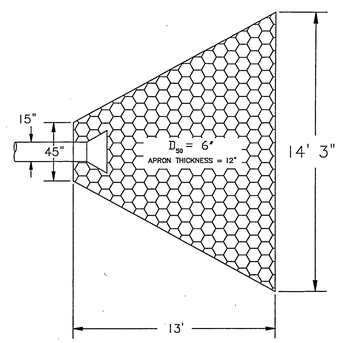

D.9 / 28 SECONDARY SETTLING BASIN OUTLET PROTECTION
NTS

NO.	DATE	DESCRIPTION	BY

NORTH CAROLINA PROFESSIONAL SEAL 8895 ENGINEER GREGORY N. RICHARDSON

HAZEN AND SAWYER
Environmental Engineers & Scientists

DETAILS
HALIFAX COUNTY ASH MONOFILL

SCALE	DRAWN BY:	CHECKED BY:
NTS	BEK	GNR
JOB NO. 3720	DATE: 2-92	