Permit No.	Date	Document ID No.
38-03	**February 24, 2010**	**9849**

SOLID WASTE TRANSFER STATION

GRAHAM COUNTY

GRAHAM COUNTY, NORTH CAROLINA

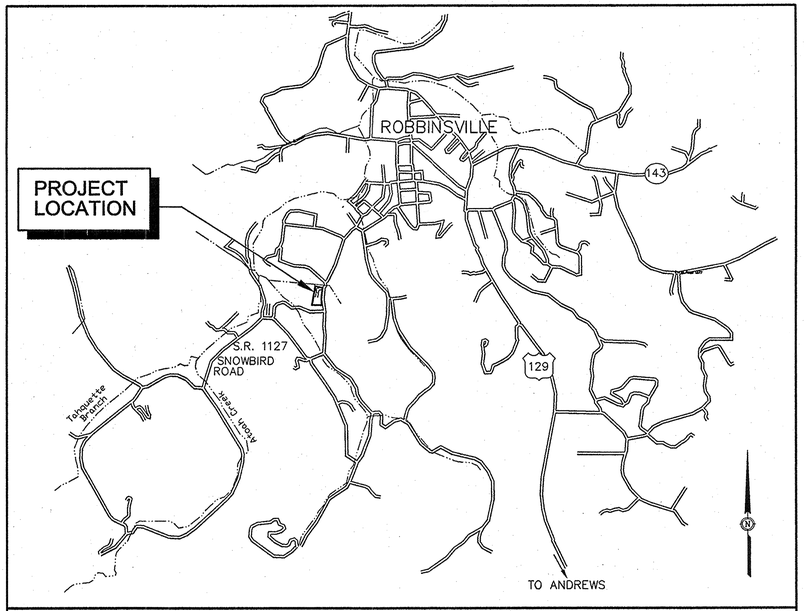

PROJECT LOCATION MAP NOT TO SCALE

SCHEDULE OF DRAWINGS

CIVIL

G1. . . COVER SHEET - PROJECT LOCATION MAP
C1. . . SITE PLAN
C2. . . GRADING, DRAINAGE AND EROSION CONTROL PLAN
B1. . . TRANSFER STATION BUILDING ELEVATIONS AND PLAN
D1. . . MISCELLANEOUS DETAILS
D2. . . MISCELLANEOUS DETAILS

STRUCTURAL

S1.1. . FOUNDATION PLAN AND GENERAL NOTES
S2.1. . FOUNDATION DETAILS
S2.2. . FOUNDATION DETAILS

ELECTRICAL

E1. . . ELECTRICAL SITE PLAN
E2. . . TRANSFER STATION FLOOR PLAN-ELECTRICAL
E3. . . LEGEND, NOTES, MISCELLANEOUS DETAILS

APPROVED
DIVISION OF WASTE MANAGEMENT
SOLID WASTE SECTION
DATE 11/5/2004 BY
PERMIT #38-03-T
RALEIGH CENTRAL FILE

"AS-BUILT" RECORD DWGS

McGill ASSOCIATES
ENGINEERING·PLANNING·FINANCE
55 BROAD STREET ASHEVILLE, NC 28801 PH. (828) 252-0575

NORTH CAROLINA PROFESSIONAL ENGINEER SEAL 24993 MARK D. CATHEY 10/20/04

OCTOBER 2003

RECORD DRAWING
OCTOBER 20, 2004

L:dwgs/03310/McGILLDwgs/Record-Dwgs/03310-G1-RD.dwg

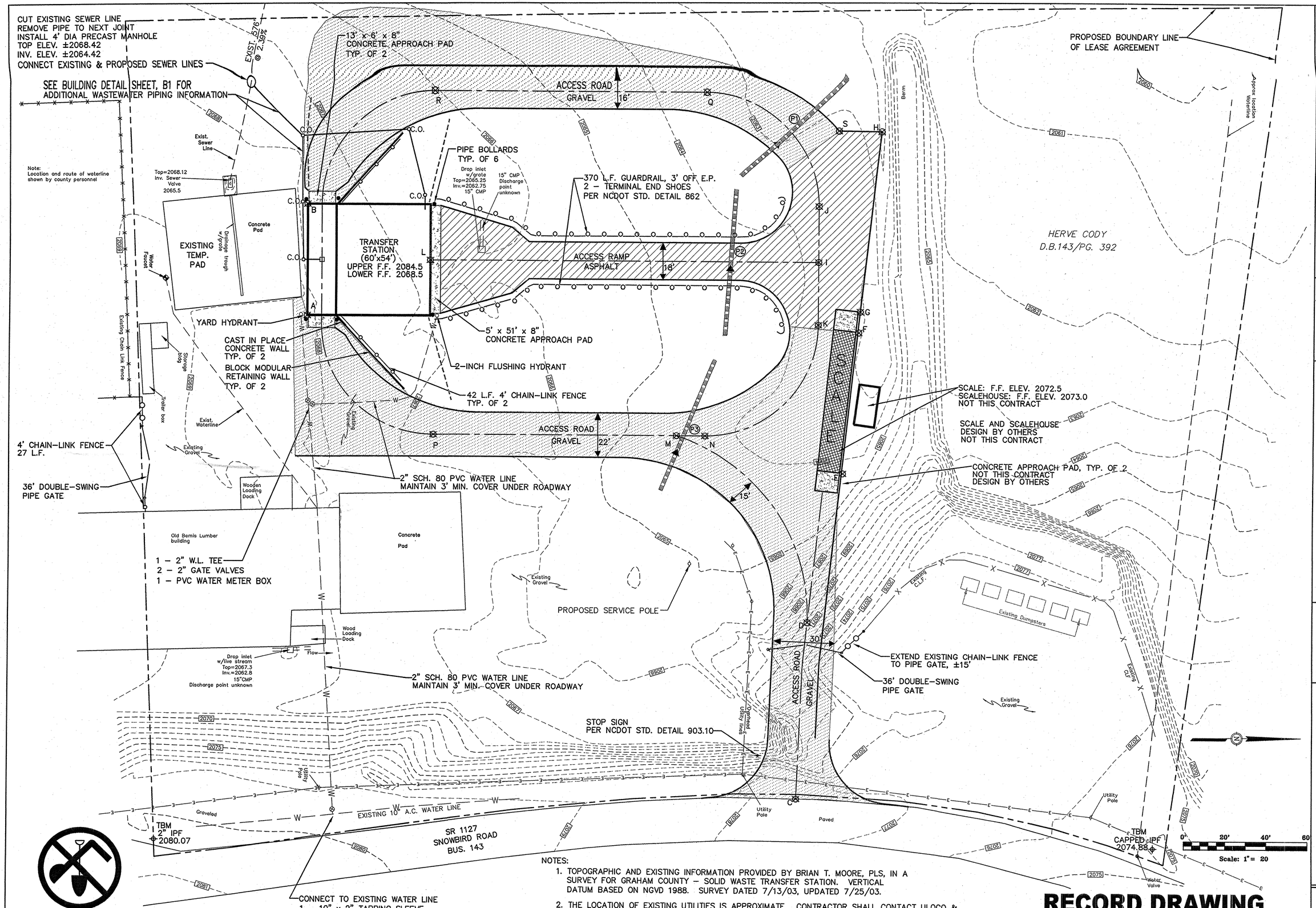

BEFORE YOU DIG!
CALL 1-800-632-4949
N.C. ONE-CALL CENTER
IT'S THE LAW!

CONNECT TO EXISTING WATER LINE
1 – 10" x 2" TAPPING SLEEVE
1 – 2" GATE VALVE
1 – PVC WATER METER BOX

NOTES:

1. TOPOGRAPHIC AND EXISTING INFORMATION PROVIDED BY BRIAN T. MOORE, PLS, IN A SURVEY FOR GRAHAM COUNTY – SOLID WASTE TRANSFER STATION. VERTICAL DATUM BASED ON NGVD 1988. SURVEY DATED 7/13/03, UPDATED 7/25/03.
2. THE LOCATION OF EXISTING UTILITIES IS APPROXIMATE. CONTRACTOR SHALL CONTACT ULOCO & APPROPRIATE UTILITY AGENCIES PRIOR TO EXCAVATION.
3. CONTRACTOR WILL BE PROVIDED A DIGITAL FILE OF SITE PLANS FOR STAKING PURPOSES.
4. DUMPSTERS PROVIDED BY GRAHAM COUNTY.

RECORD DRAWING

OCTOBER 20, 2004

NO.	DATE	BY	REVISION DESCRIPTION
1	2/27/04	DAP	ADDED TBM'S

McGill ASSOCIATES
ENGINEERING·PLANNING·FINANCE
55 BROAD STREET ASHEVILLE, NC 28801 PH (828) 252-0575

NORTH CAROLINA PROFESSIONAL ENGINEER SEAL 24993 MARK D. CATHEY

SOLID WASTE TRANSFER STATION

GRAHAM COUNTY

GRAHAM COUNTY, NORTH CAROLINA

JOB NO.: 03310
DATE: SEPTEMBER 2003
SCALE: 1" = 20'
DESIGNED BY: DP
CADD BY: DP
DESIGN REVIEW: ____
CONST. REVIEW: ____
03310-Base-RD.dwg

SITE PLAN

SHEET

C1

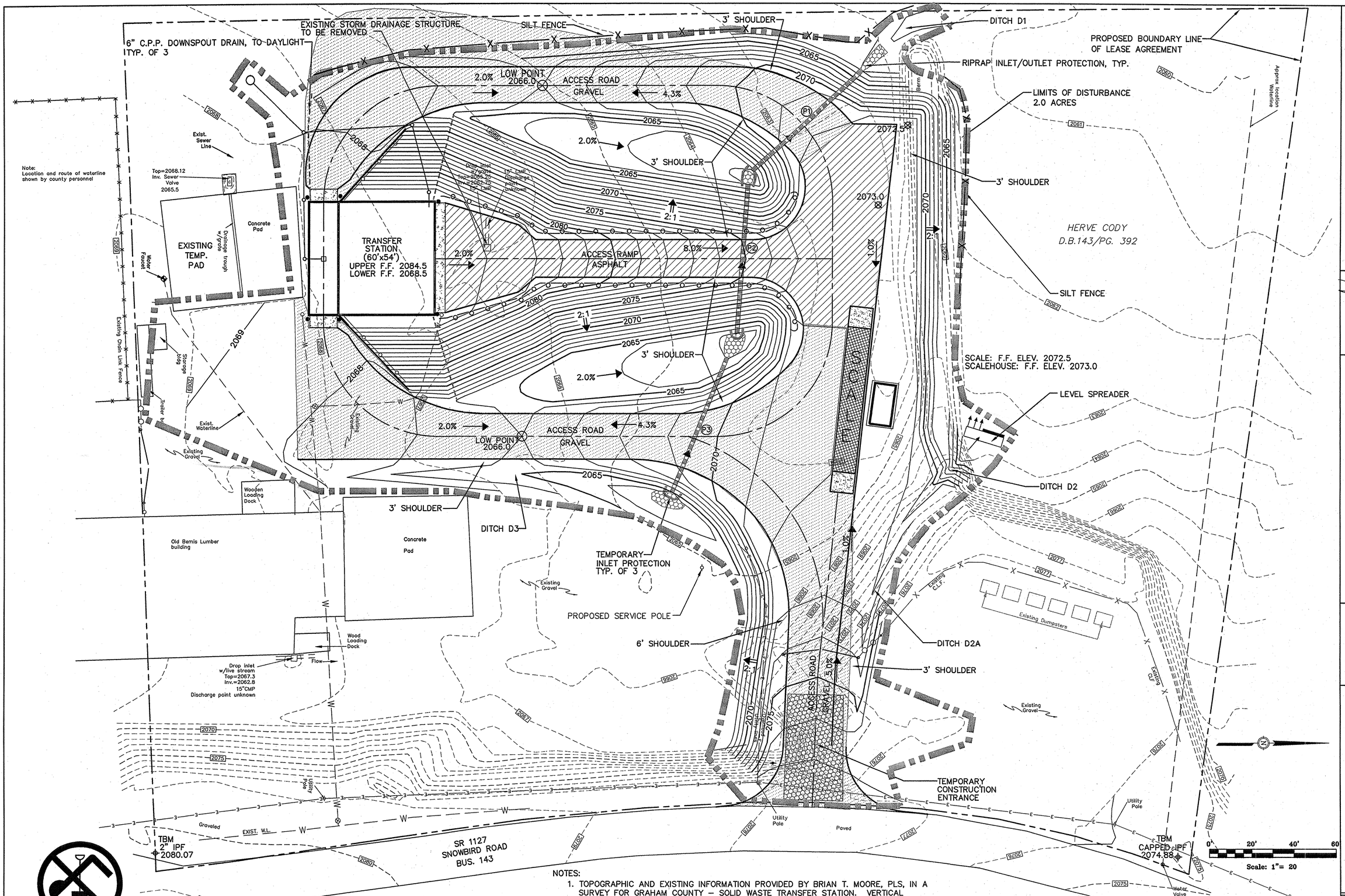

BEFORE YOU DIG! CALL 1-800-632-4949 N.C. ONE-CALL CENTER IT'S THE LAW!

STORM DRAINAGE PIPE SCHEDULE						
PIPE	MATERIAL	LENGTH	SIZE	SLOPE	INV. IN ELEV.	INV. OUT ELEV.
P1	CMP	70 L.F.	24"	1.00%	2061.9	2061.2
P2	B.C.-CMP W/HALF-PAVED	70 L.F.	24"	1.00%	2062.8	2062.1
P3	CMP	70 L.F.	24"	1.00%	2063.7	2063.0

NOTE: PIPES P1, P2, & P3 HAVE FLARED-END SECTION AT INVERT IN. PIPE P1 HAS FLARED-END SECTION AT INVERT OUT.

NOTES:

1. TOPOGRAPHIC AND EXISTING INFORMATION PROVIDED BY BRIAN T. MOORE, PLS, IN A SURVEY FOR GRAHAM COUNTY – SOLID WASTE TRANSFER STATION. VERTICAL DATUM BASED ON NGVD 1988. SURVEY DATED 7/13/03, UPDATED 7/25/03.
2. THE LOCATION OF EXISTING UTILITIES IS APPROXIMATE. CONTRACTOR SHALL CONTACT ULOCO & APPROPRIATE UTILITY AGENCIES PRIOR TO EXCAVATION.
3. CONTRACTOR WILL BE PROVIDED A DIGITAL FILE OF SITE PLANS FOR STAKING PURPOSES.
4. DUMPSTERS PROVIDED BY GRAHAM COUNTY.

RECORD DRAWING

OCTOBER 20, 2004

NO.	DATE	BY	REVISION DESCRIPTION
1	2/27/04	DAP	ADDED TBM'S

McGill ASSOCIATES
ENGINEERING·PLANNING·FINANCE
55 BROAD STREET ASHEVILLE, NC 28801 PH. (828) 252-0575

NORTH CAROLINA PROFESSIONAL ENGINEER SEAL 24993 MARK D. MOORE

SOLID WASTE TRANSFER STATION

GRAHAM COUNTY

GRAHAM COUNTY, NORTH CAROLINA

JOB NO.: 03310
DATE: SEPTEMBER 2003
SCALE: 1" = 20'
DESIGNED BY: DP
CADD BY: DP
DESIGN REVIEW: ____
CONST. REVIEW: ____

03310-Base-RD.dwg

GRADING, DRAINAGE & EROSION CONTROL PLAN

SHEET

C2

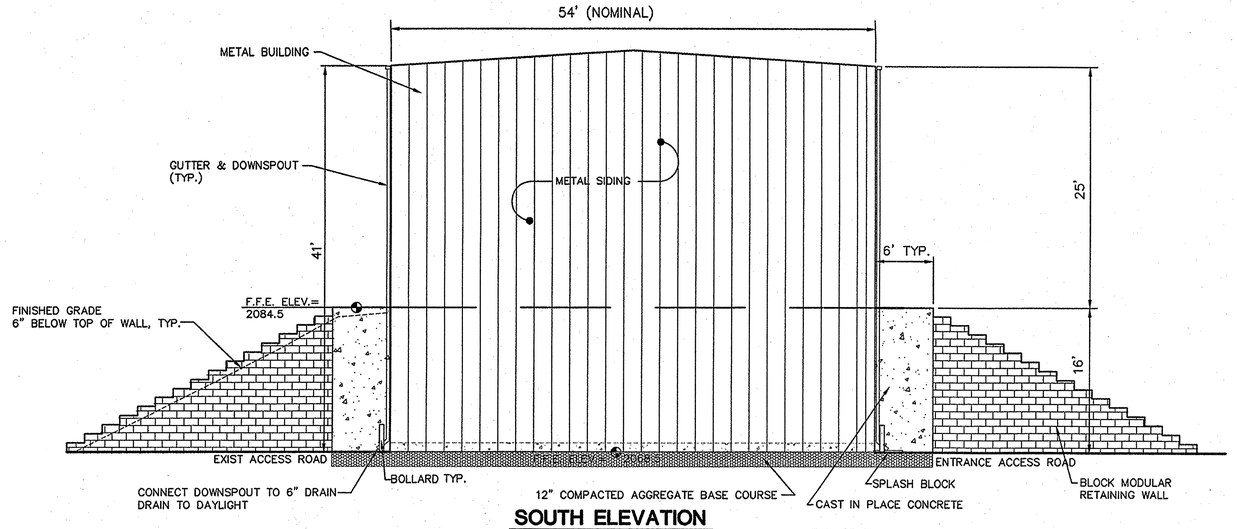

SOUTH ELEVATION

SCALE: 1/8" = 1'-0"

TYP. OF 2

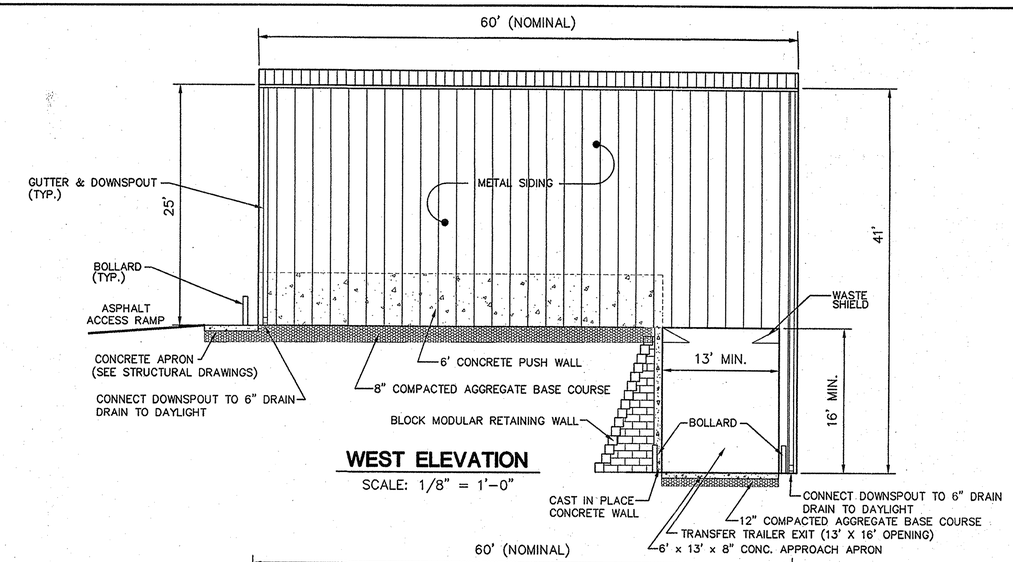

WEST ELEVATION

SCALE: 1/8" = 1'-0"

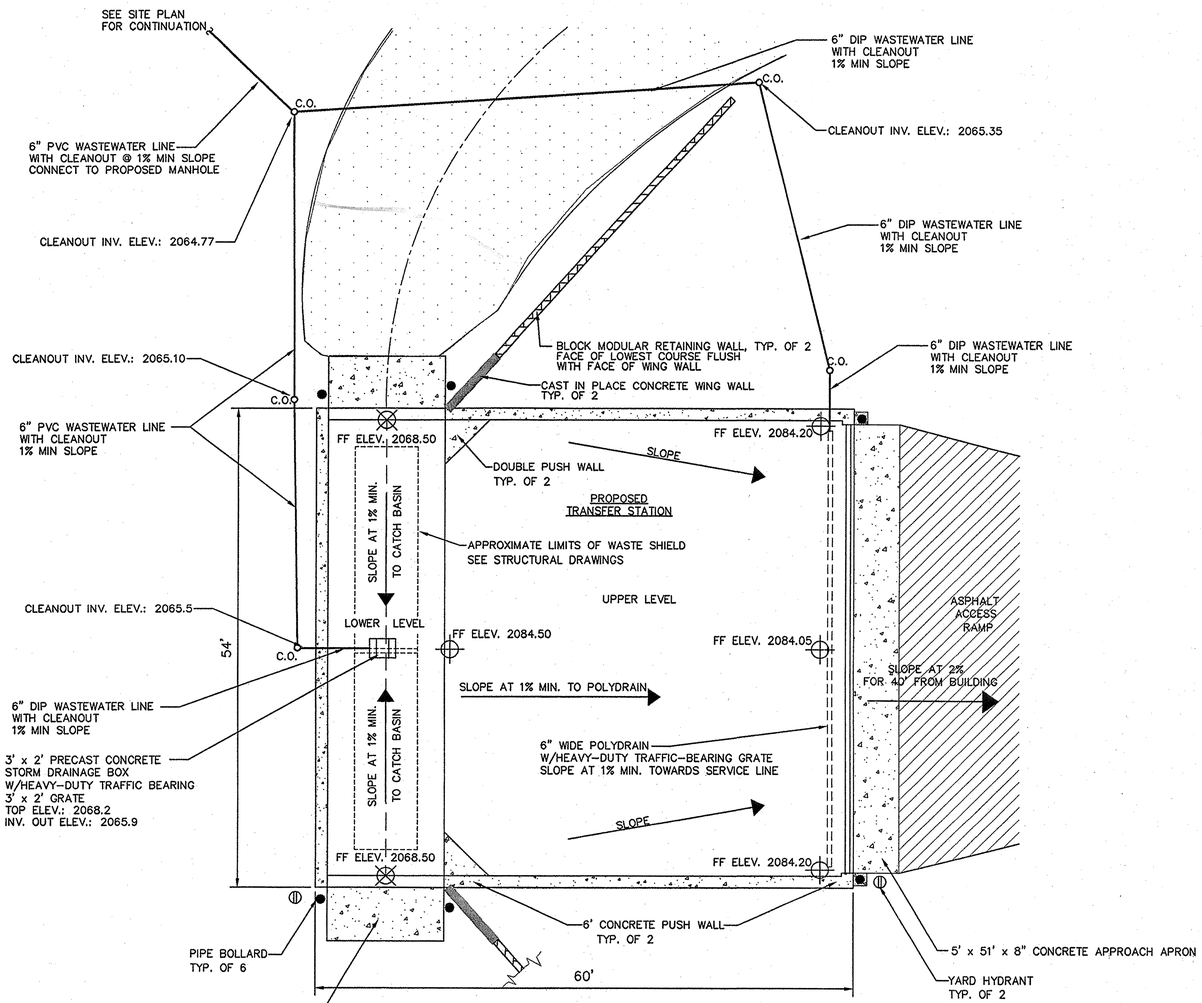

TRANSFER STATION PLAN

SCALE: 1/8" = 1'-0"

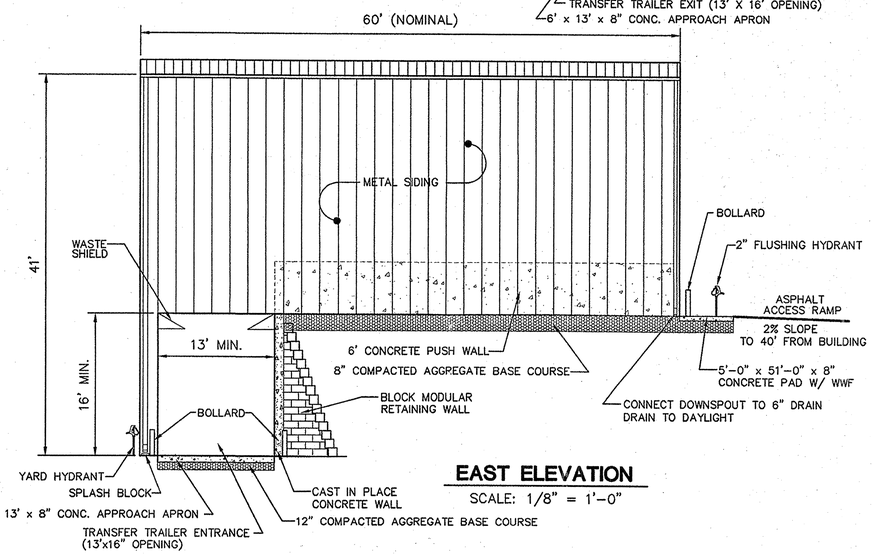

EAST ELEVATION

SCALE: 1/8" = 1'-0"

NOTE: COLOR OF TRANSFER STATION MUST MATCH EXISTING METAL BUILDINGS ADJACENT TO THE SITE

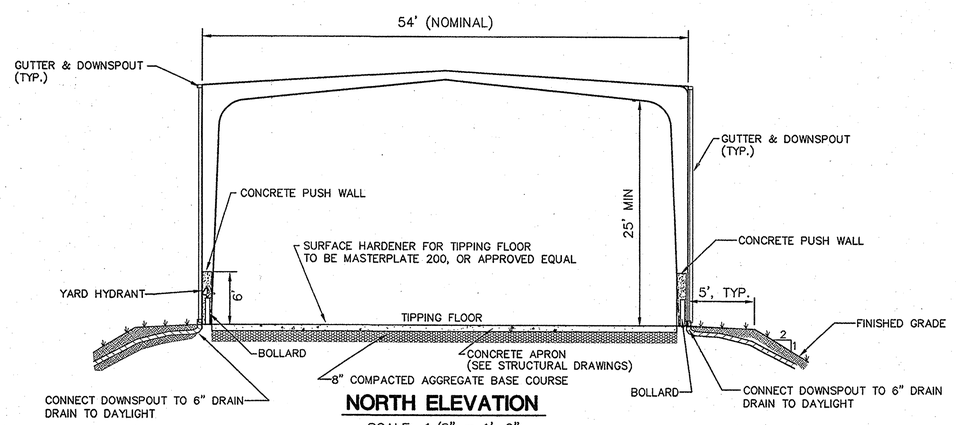

NORTH ELEVATION

SCALE: 1/8" = 1'-0"

RECORD DRAWING

OCTOBER 20, 2004

NO.	DATE	BY	REVISION DESCRIPTION

McGill ASSOCIATES
ENGINEERING • PLANNING • FINANCE
55 BROAD STREET
ASHEVILLE, NC
PH. (828) 252-0575
FAX (828) 252-2518

NORTH CAROLINA PROFESSIONAL ENGINEER SEAL 24993 MARK D. ... 10/20/04

SOLID WASTE TRANSFER STATION

GRAHAM COUNTY

GRAHAM COUNTY, NORTH CAROLINA

JOB NO.: 03310
DATE: SEPT 2003
SCALE: AS NOTED
DESIGNED BY: DP
CADD BY: DP
DESIGN REVIEW: ____
CONST. REVIEW: ____
03310-B1

TRANSFER STATION BUILDING
ELEVATIONS & PLAN

SHEET
B1

L:DWGS/03310/McGILL DWGS/03310-B1

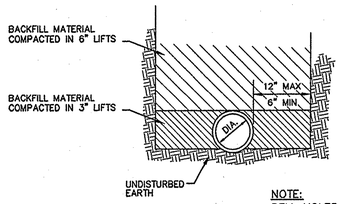

NOTE:
BELL HOLES NOT SHOWN

STANDARD EXCAVATION

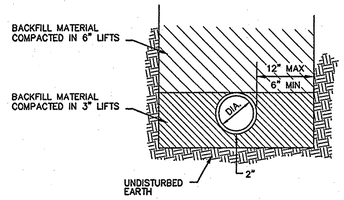

OVERCUT EXCAVATION

NOTE: 1. CONSTRUCTION OF TRENCHES SHALL COMPLY WITH ALL FEDERAL, STATE AND LOCAL SAFETY AND HEALTH REGULATIONS WHICH HAVE JURISDICTION AT THE PROJECT SITE. IT IS THE CONTRACTOR'S RESPONSIBILITY TO BE FAMILIAR WITH THE APPLICABLE REGULATIONS AND FOLLOW THEM ACCORDINGLY.

2. PAYMENT FOR SELECT BACKFILL IN TRENCH SHALL BE FOR ACTUAL QUANTITIES AND SHALL NOT EXCEED THE WIDTH OF TRENCH SHOWN ON THIS DETAIL.

TYPICAL TRENCHING DETAILS

WATER LINES

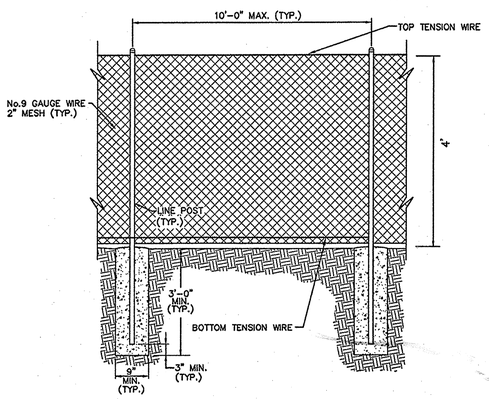

CHAIN LINK FENCE DETAIL

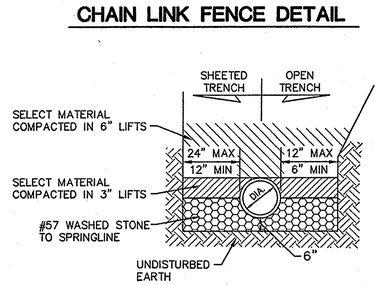

STORM DRAINAGE PIPING

TYPICAL TRENCHING DETAILS

NTS

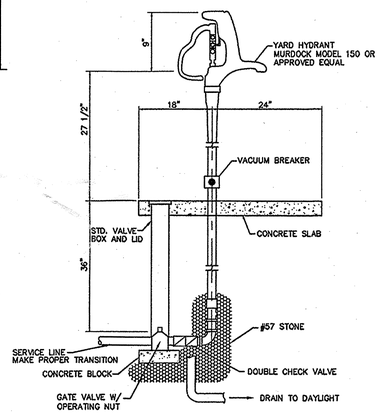

YARD HYDRANT DETAIL

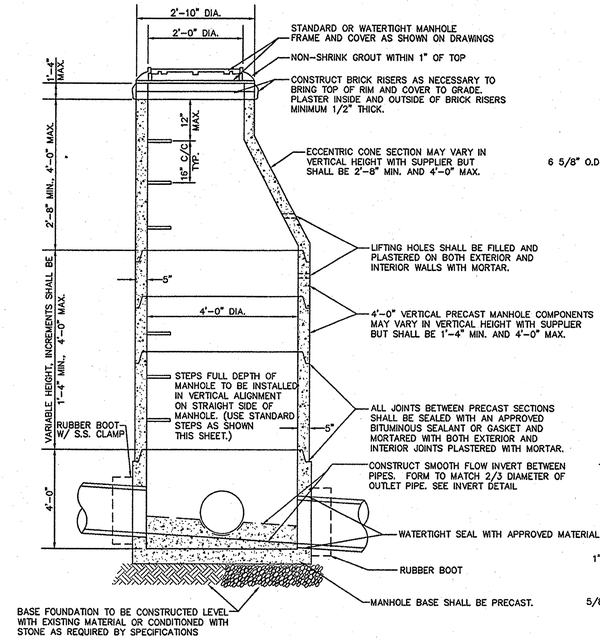

ELEVATION VIEW

PRECAST MANHOLE NOTES:

1. ALL PRECAST MANHOLE COMPONENTS SHALL MEET REQUIREMENTS OF ASTM C-478, LATEST REVISION.
2. ALL MANHOLES SHALL BE CONSTRUCTED PLUMB
3. ALL MANHOLE GRADES SHOWN ON THE PLANS ARE FOR THE INVERT OF THE MANHOLE CENTER.
4. IF MANHOLE IS SET IN LOCATION OF HIGH WATER TABLE OR UNDERGROUND WATER IS ENCOUNTERED, THE CONTRACTOR SHALL INSTALL UNDERDRAINS AND STONE AS DIRECTED IN THE FIELD BY THE ENGINEER.
5. STEPS SHALL BE INSTALLED ON STRAIGHT SIDE OF MANHOLE.

PRECAST CONCRETE MANHOLE

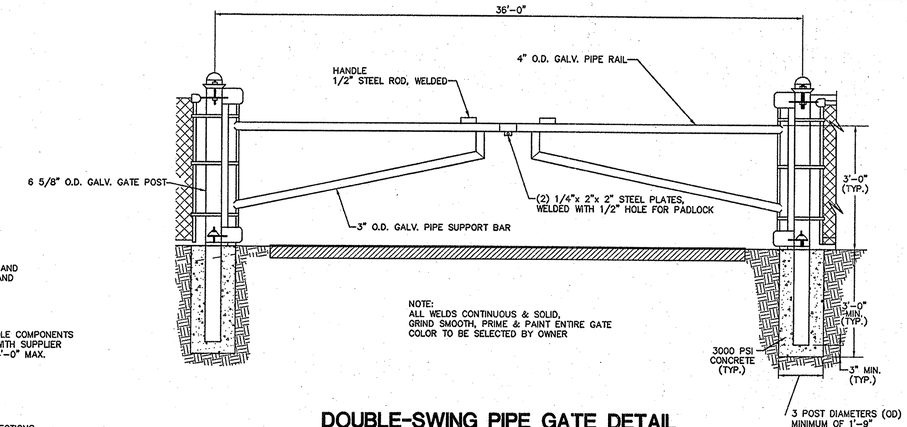

DOUBLE-SWING PIPE GATE DETAIL

NOT TO SCALE

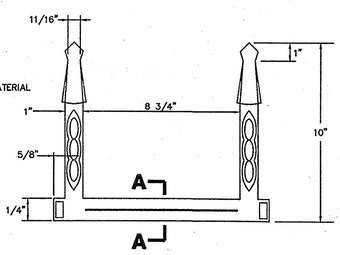

PLAN

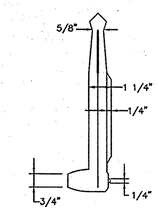

SIDE ELEVATION

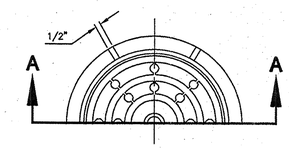

HALF PLAN OF MANHOLE RING & COVER

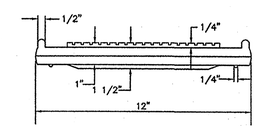

ELEVATION

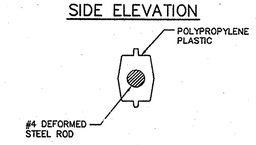

SECTION A–A

MANHOLE STEPS

CONSTRUCTION NOTES

1. ALL STEPS SHALL PROTRUDE A MINIMUM OF 5" AND A MAXIMUM OF 7" FROM INSIDE FACE OF STRUCTURE WALL.
2. STEPS DIFFERING IN DIMENSIONS, CONFIGURATION, OR MATERIALS FROM THOSE SHOWN MAY ALSO BE USED PROVIDED THE CONTRACTOR HAS FURNISHED THE ENGINEER WITH DETAILS OF THE PROPOSED STEPS AND HAS RECEIVED PRIOR WRITTEN APPROVAL FROM THE ENGINEER FOR THE USE OF SAID STEPS.

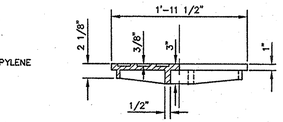

SECTION A–A
MANHOLE COVER

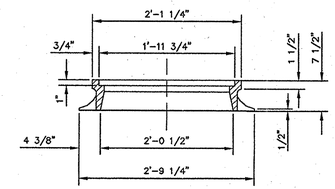

SECTION A–A
MANHOLE RING

NOTE: TRAFFIC BEARING RING AND COVER. MINIMUM WEIGHT 315 POUNDS

MANHOLE RING & COVER

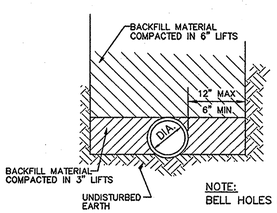

NOTE:
BELL HOLES NOT SHOWN

STANDARD EXCAVATION

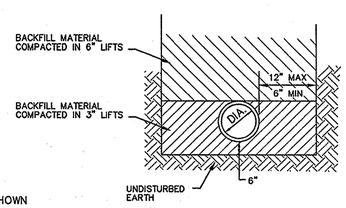

OVERCUT EXCAVATION

NOTE: 1. CONSTRUCTION OF TRENCHES SHALL COMPLY WITH ALL FEDERAL, STATE AND LOCAL SAFETY AND HEALTH REGULATIONS WHICH HAVE JURISDICTION AT THE PROJECT SITE. IT IS THE CONTRACTOR'S RESPONSIBILITY TO BE FAMILIAR WITH THE APPLICABLE REGULATIONS AND FOLLOW THEM ACCORDINGLY.

2. PAYMENT FOR SELECT BACKFILL IN TRENCH SHALL BE FOR ACTUAL QUANTITIES AND SHALL NOT EXCEED THE WIDTH OF TRENCH SHOWN ON THIS DETAIL.

TYPICAL TRENCHING DETAILS

SEWER LINES

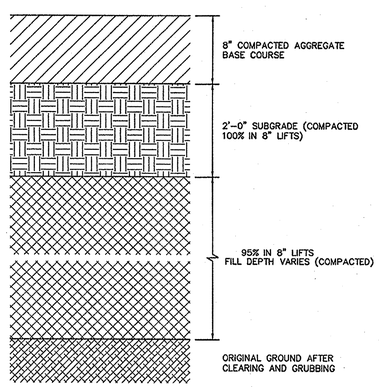

TYPICAL GRAVEL PAVING CROSS-SECTION

NTS

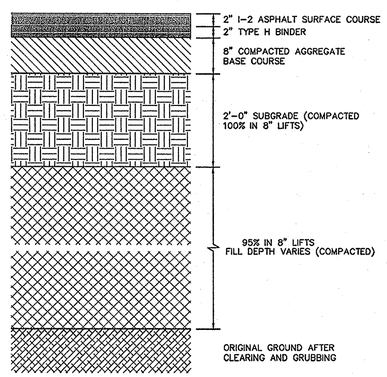

TYPICAL ASPHALT PAVING CROSS-SECTION

NTS

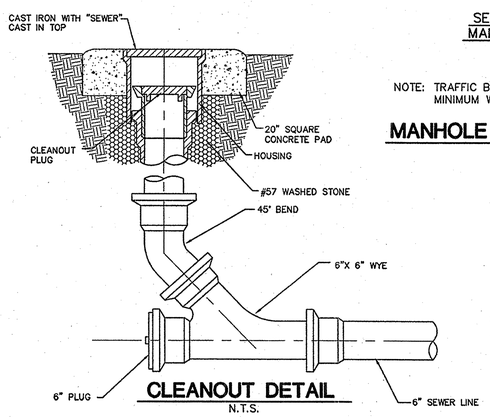

CLEANOUT DETAIL

N.T.S.

RECORD DRAWING
OCTOBER 20, 2004

NO.	DATE	BY	REVISION DESCRIPTION

McGill ASSOCIATES
ENGINEERING • PLANNING • FINANCE
55 BROAD STREET
ASHEVILLE, NC
PH. (828) 252-0575
FAX (828) 252-2518

SOLID WASTE TRANSFER STATION
GRAHAM COUNTY
GRAHAM COUNTY, NORTH CAROLINA

JOB NO.: 03310
DATE: SEPT 2003
SCALE: AS SHOWN
DESIGNED BY: DP
CADD BY: DP
DESIGN REVIEW: ____
CONST. REVIEW: ____
03310-Details-RD.dwg

MISCELLANEOUS DETAILS

SHEET
D1

L:DWGS/03310/McGILL-DWGS/03310-D1.dwg

GENERAL CONSTRUCTION NOTES

1. UNLESS OTHERWISE STATED, ALL FILL AREAS SHALL BE CONSTRUCTED IN LAYERS OF 8" MAXIMUM THICKNESS, WITH WATER ADDED OR SOIL CONDITIONED TO THE OPTIMUM MOISTURE CONTENT AS DETERMINED BY THE ENGINEER AND COMPACTED WITH A SHEEP'S FOOT ROLLER TO A COMPACTION EQUAL TO OR GREATER THAN 95% (100% IN THE TOP 2' OF THE SUBGRADE BELOW ROADWAYS AND PARKING LOTS) OF THE DENSITY OBTAINED BY COMPACTING A SAMPLE OF THE MATERIAL IN ACCORDANCE WITH THE STANDARD PROCTOR METHOD OF MOISTURE-DENSITY RELATIONSHIP TEST, ASTM D698 UNLESS SPECIFIED IN OTHER SPECIFICATIONS.
2. ENTIRE AREA TO BE GRADED SHALL BE CLEARED AND GRUBBED. NO FILL SHALL BE PLACED ON ANY AREA NOT CLEARED AND GRUBBED.
3. ALL SOIL EROSION CONTROL MEASURES REQUIRED BY THE GRADING PLAN SHALL BE PERFORMED PRIOR TO GRADING, CLEARING OR GRUBBING. ALL EROSION CONTROL DEVICES SUCH AS SILT FENCES, ETC., SHALL BE MAINTAINED IN WORKABLE CONDITION FOR THE LIFE OF THE PROJECT AND SHALL BE REMOVED AT THE COMPLETION OF THE PROJECT ONLY ON THE ENGINEER'S APPROVAL. PAYMENT SHALL BE CONSIDERED INCIDENTAL TO CLEARING AND GRUBBING. IF DURING THE LIFE OF THE PROJECT, A STORM CAUSES SOIL EROSION WHICH CHANGES FINISH GRADES OR CREATES "GULLIES" AND "WASHED AREAS", THESE SHALL BE REPAIRED AT NO EXTRA COST, AND ALL SILT WASHED OFF OF THE PROJECT SITE ONTO ADJACENT PROPERTY SHALL BE REMOVED AS DIRECTED BY THE ENGINEER AT NO EXTRA COST. THE CONTRACTOR SHALL ADHERE TO ANY APPROVED EROSION CONTROL PLANS WHETHER INDICATED IN THE CONSTRUCTION PLANS OR UNDER SEPARATE COVER.
4. ABANDONED UTILITIES SUCH AS CULVERTS, WATER PIPE, HYDRANTS, CASTINGS, PIPE APPURTENANCES, UTLITY POLES, ETC., SHALL BE THE PROPERTY OF THE SPECIFIC UTILITY AGENCY, OR COMPANY HAVING JURISDICTION. BEFORE THE CONTRACTOR CAN REMOVE, DESTROY, SALVAGE, REUSE, SELL OR STORE FOR HIS OWN USE ANY ABANDONED UTILITY, HE MUST PRESENT TO THE OWNER WRITTEN PERMISSION FROM THE UTILITY INVOLVED.
5. THE CONTRACTOR IS RESPONSIBLE FOR THE COORDINATION OF ADJUSTMENT OF ALL UTILITY SURFACE ACCESSES WHETHER HE PERFOMS THE WORK OR A UTILITY COMPANY PERFORMS THE WORK.
6. THE CONTRACTOR SHALL CONTROL ALL "DUST" BY PERIODIC WATERING AND SHALL PROVIDE ACCESS AT ALL TIMES FOR PROPERTY OWNERS AND GUESTS WITHIN THE PROJECT AREA AND FOR EMERGENCY VEHICLES. ALL OPEN DITCHES AND HAZARDOUS AREAS SHALL BE CLEARLY MARKED IN ACCORDANCE WITH THE SPECIFICATIONS.
7. ALL AREAS WHERE THERE IS EXPOSED DIRT SHALL BE SEEDED, FERTILIZED AND MULCHED ACCORDING TO THE SPECIFICATIONS. THE FINISHED SURFACE SHALL BE TO GRADE AND SMOOTH, FREE OF ALL ROCKS LARGER THAN 3", EQUIPMENT TRACKS, DIRT CLODS, BUMPS, RIDGES AND GOUGES PRIOR TO SEEDING; THE SURFACE SHALL BE LOOSENED TO A DEPTH OF 1" (+/-) TO ACCEPT SEED. THE CONTRACTOR SHALL NOT PROCEED WITH SEEDING OPERATIONS WITHOUT FIRST OBTAINING THE ENGINEER'S APPROVAL OF THE GRADED SURFACE. ALL SEEDING SHALL BE PERFOMED BY A MECHANICAL "HYDRO-SEEDER". HAND SEEDING SHALL BE PERFORMED ON AN AREA, ONLY WITH PRIOR APPROVAL FROM THE ENGINEER.
8. CONTRACTOR SHALL VERIFY ALL ELEVATIONS BEFORE INSTALLATION OF FACILITIES.
9. CATCH BASINS CAST-IN-PLACE SHALL CONFORM TO THE REQUIREMENTS OF NCDOT STANDARD SPECIFICATIONS FOR ROADS AND STRUCTURES (LATEST EDITION) ARTICLES 840-1 THROUGH 840-3. CURB INLET CATCH BASIN SHALL CONFORM TO NCDOT STANDARD DETAILS 840.02 THROUGH 840.04. DROP INLETS SHALL CONFORM TO STANDARD DETAIL 840.14. JUNCTION BOXES SHALL CONFORM TO STANDARD DETAIL 840.31.
10. FIELD INLET COVER SHALL CONFORM TO NCDOT STANDARD DETAIL 840.04, OPENING FACING UPSTREAM.
11. TOPS OF PROPOSED FRAMES AND GRATES SHALL BE FLUSH WITH FINISHED GRADE.
12. WHERE SPECIFIED, STORM DRAIN PIPE SHALL BE CORRUGATED METAL PIPE (CMP) CONFORMING TO AASHTO M-36, WITH REROLLED ENDS TO ACCOMMODATE CORRUGATED COUPLING BANDS. 18" PIPE SHALL BE 16 GAUGE, 24" AND 30" PIPE SHALL BE 14 GAUGE AND 36" PIPE AND OVER SHALL BE 12 GAUGE. COUPLING BANDS SHALL CONFORM TO NCDOT 932-3(A). DIMPLE BANDS SHALL NOT BE USED.
13. GUARDRAIL SHALL CONFORM TO THE CURRENT REQUIREMENTS OF THE NCDOT STANDARD FOR ROADS AND STRUCTURES, SECTION 862.

NORTH CAROLINA LAND QUALITY SECTION
EROSION CONTROL NOTES

GENERAL: ALL EROSION CONTROL MEASURES ARE TO BE PERFORMED IN STRICT ACCORDANCE WITH REQUIREMENTS OF THE NORTH CAROLINA DEPARTMENT OF ENVIRONMENT AND NATURAL RESOURCES, DIVISION OF LAND RESOURCES, LAND QUALITY SECTION. THE FOLLOWING CONSTRUCTION SEQUENCE SHALL BE COMPLIED WITH FOR ALL WORK.

1. – OBTAIN GRADING PERMIT
2. – INSTALL ALL EROSION CONTROL MEASURES AS REQUIRED BY THE NORTH CAROLINA DEPARTMENT OF ENVIRONMENT AND NATURAL RESOURCES, DIVISION OF LAND RESOURCES, LAND QUALITY SECTION.
3. – OBTAIN CERTIFICATE OF COMPLIANCE THROUGH ON-SITE INSPECTION BY A REPRESENTATIVE OF THE NORTH CAROLINA DEPARTMENT OF ENVIRONMENT AND NATURAL RESOURCES, DIVISION OF LAND RESOURCES, LAND QUALITY SECTION.
4. – PROCEED WITH GRADING, CLEARING AND GRUBBING.
5. – SEED AND MULCH DENUDED AREA WITHIN 15 DAYS AFTER FINISHED GRADE ARE ESTABLISHED. SEED AND SOIL AMENDMENTS SHALL BE PLACED ON A PREPARED SEEDBED AT THE FOLLOWING RATES PER ACRE.

LIME	4,000 LBS
FERTILIZER (10-10-10)	1,000 LBS
KY-31 FESCUE	100 LBS
STRAW MULCH	60-80 BALES

FOR SUMMER SEEDING ADD TO THE ABOVE:

GERMAN MILLET	10 LBS
SUDAN GRASS	15 LBS

FOR WINTER SEEDING ADD TO THE ABOVE

RYE GRAIN	15 LBS

FOR ALL SLOPES 2:1 OR STEEPER ADD TO THE ABOVE:

SERICEA LESPEDEZA	40 LBS

IF HYDROSEEDING IS USED, WOOD CELLULOSE MAY BE SUBSTITUTED FOR STRAW MULCH AT THE RATE OF 1,000 LBS PER ACRE.

ALL SEEDING SHALL BE MAINTAINED, WATERED ETC., UNTIL A PERMANENT VEGETATIVE GROUND COVER IS ESTABLISHED OVER ALL DISTURBED AREAS.

6. – MAINTAIN SOIL EROSION CONTROL MEASURES UNTIL PERMANENT GROUND COVER IS ESTABLISHED.
7. – REMOVE SOIL EROSION CONTROL MEASURES AND STABILIZE THESE AREAS.
8. – REQUEST FINAL APPROVAL BY THE NORTH CAROLINA DEPARTMENT OF ENVIRONMENT AND NATURAL RESOURCES, DIVISION OF LAND RESOURCES, LAND QUALITY SECTION.

L:DWGS/03310/McGILL-DWGS/03310-D1.dwg

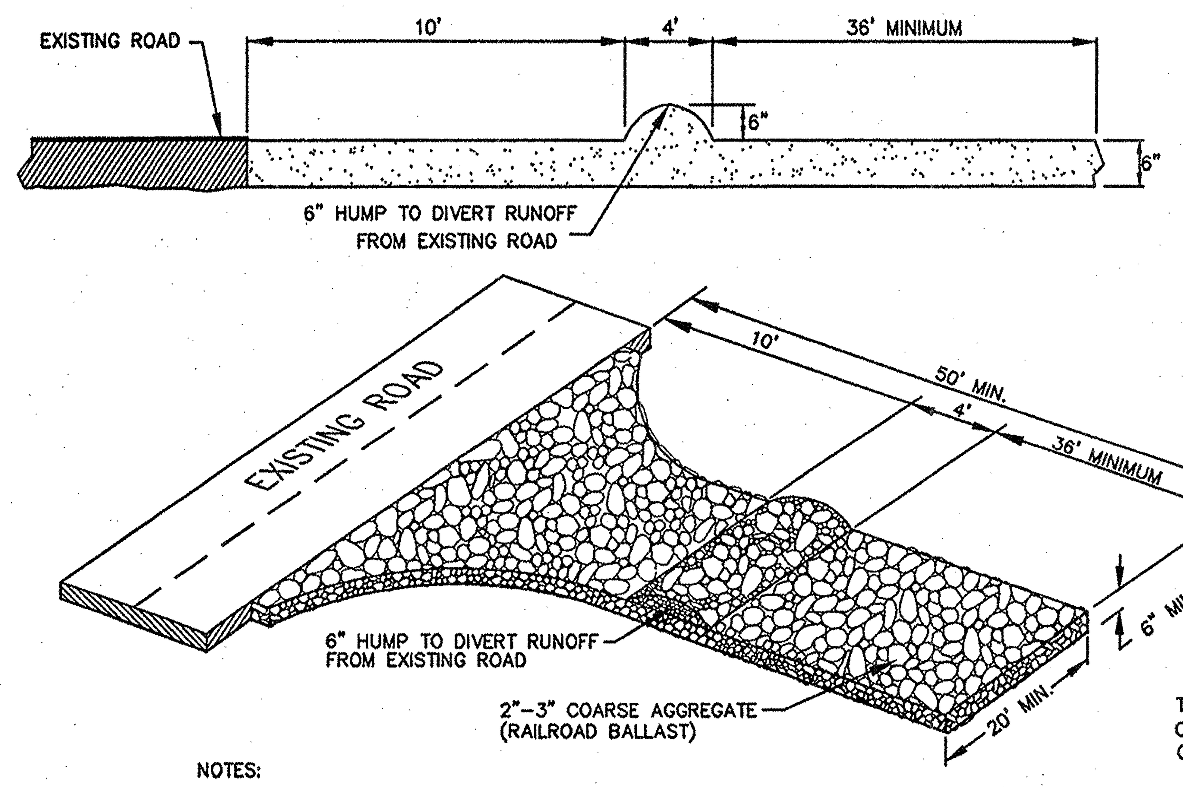

NOTES:

1. A STABILIZED PAD OF CRUSHED STONE SHALL BE LOCATED WHERE TRAFFIC WILL BE ENTERING OR LEAVING A CONSTRUCTION SITE TO OR FROM AN EXISTING ROAD.
2. STONE TO BE 2 – 3 INCH WASHED STONE RAILROAD BALLAST.
3. THE ENTRANCE SHALL BE MAINTAINED IN A CONDITION WHICH WILL PREVENT TRACKING OR FLOWING OF SEDIMENT ONTO PUBLIC STREETS OR EXISTING PAVEMENT. THIS MAY REQUIRE PERIODIC TOP DRESSING WITH ADDITIONAL STONE AS CONDITIONS DEMAND AND REPAIR AND/OR CLEANOUT OF ANY MEASURES USED TO TRAP SEDIMENT.
4. ALL SEDIMENT SPILLED, DROPPED, WASHED OR TRACKED ONTO PUBLIC STREETS MUST BE REMOVED IMMEDIATELY.
5. WHEN NECESSARY WHEELS MUST BE CLEANED TO REMOVE SEDIMENT PRIOR TO ENTERING A PUBLIC STREET, WHEN WASHING IS REQUIRED, IT SHALL BE DONE ON AN AREA STABILIZED WITH CRUSHED STONE WHICH DRAINS INTO AN APPROVED SEDIMENT BASIN.

TEMPORARY CONSTRUCTION ENTRANCE

NTS

DITCH SCHEDULE

DITCH	SLOPE(%)	b	d	X	PROPOSED DITCH LINING
1	1.0	2	1	2	GRASS-LINED
2	40	1	1	2	CLASS B RIPRAP
2A	5	0	1	2	CLASS B RIPRAP
3	2.0	0	1	2	GRASS-LINED

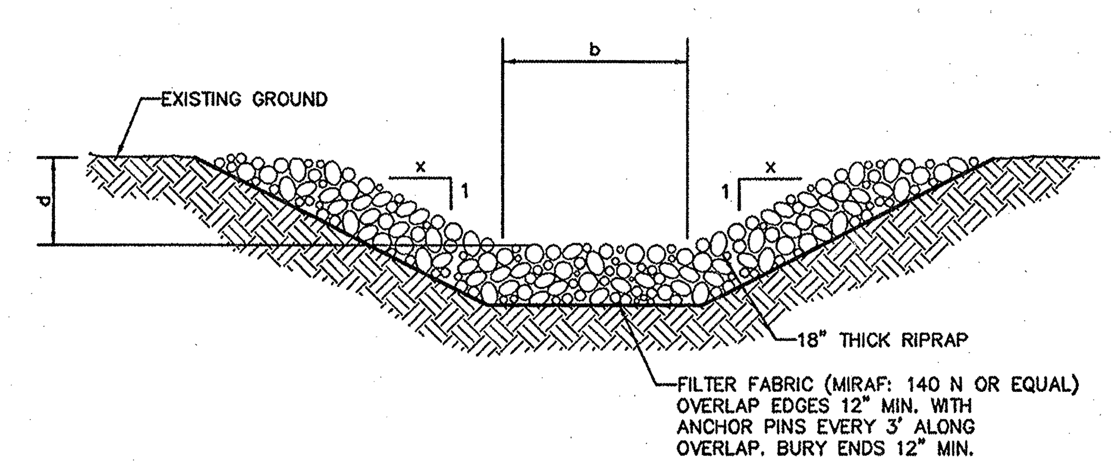

TYPICAL DITCH DETAIL

NTS

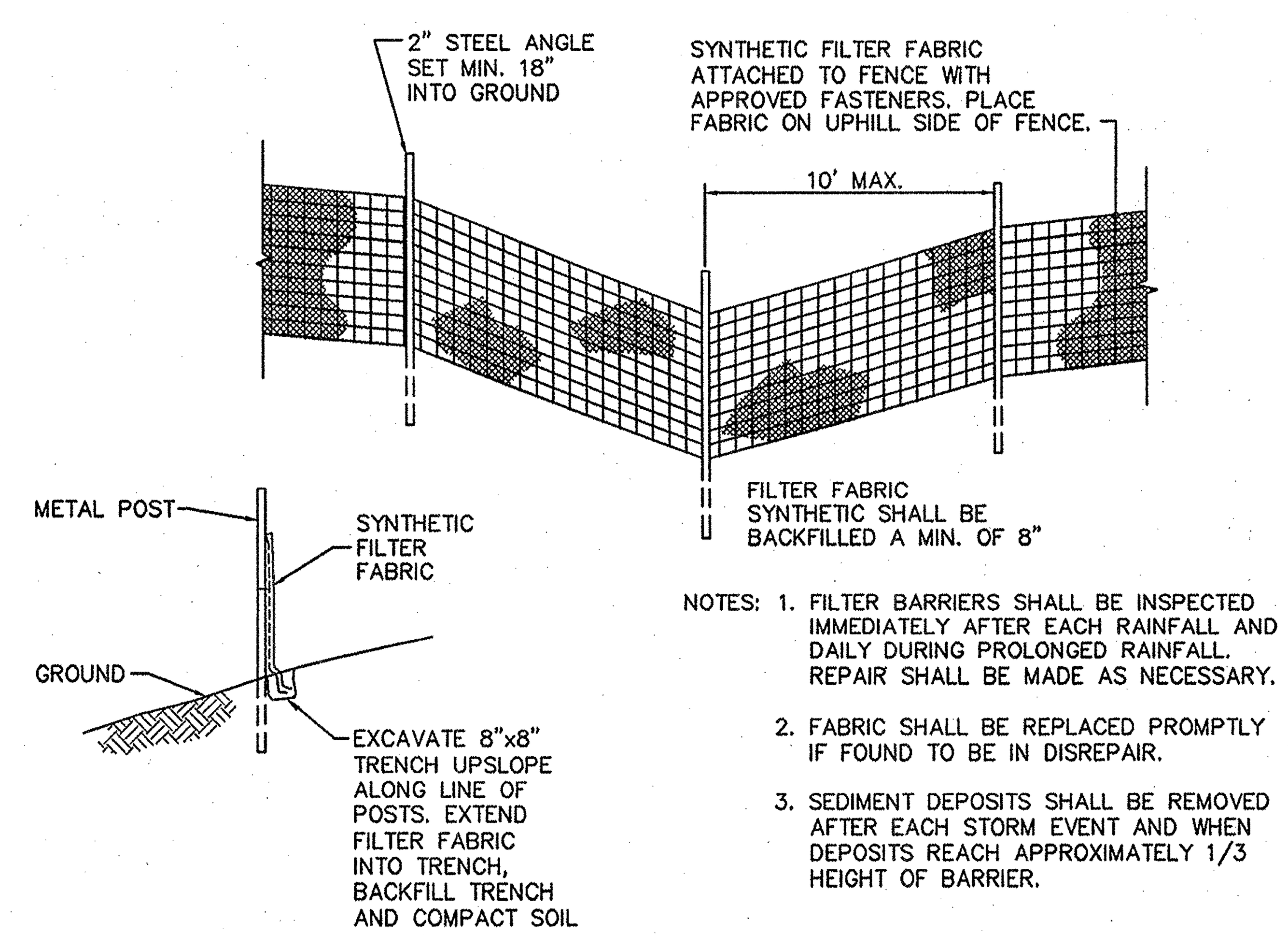

NOTES:
1. FILTER BARRIERS SHALL BE INSPECTED IMMEDIATELY AFTER EACH RAINFALL AND DAILY DURING PROLONGED RAINFALL. REPAIR SHALL BE MADE AS NECESSARY.
2. FABRIC SHALL BE REPLACED PROMPTLY IF FOUND TO BE IN DISREPAIR.
3. SEDIMENT DEPOSITS SHALL BE REMOVED AFTER EACH STORM EVENT AND WHEN DEPOSITS REACH APPROXIMATELY 1/3 HEIGHT OF BARRIER.

STANDARD SILT FENCE

NTS

RIPRAP APRON SIZING (PER FIGURE 8.06a ATTACHED)

OUTLET NO.	PIPE DIA. (Do)	3 x Do	APRON LENGTH (La)	APRON WIDTH (W) W = Do + La	RIPRAP SIZE d_{50} x Thickness (T)
P1	24"	6'	10'	12'	6"x18"
P2	24"	6'	10'	12'	6"x18"
P3	24"	6'	10'	12'	6"x18"

RIPRAP APRON

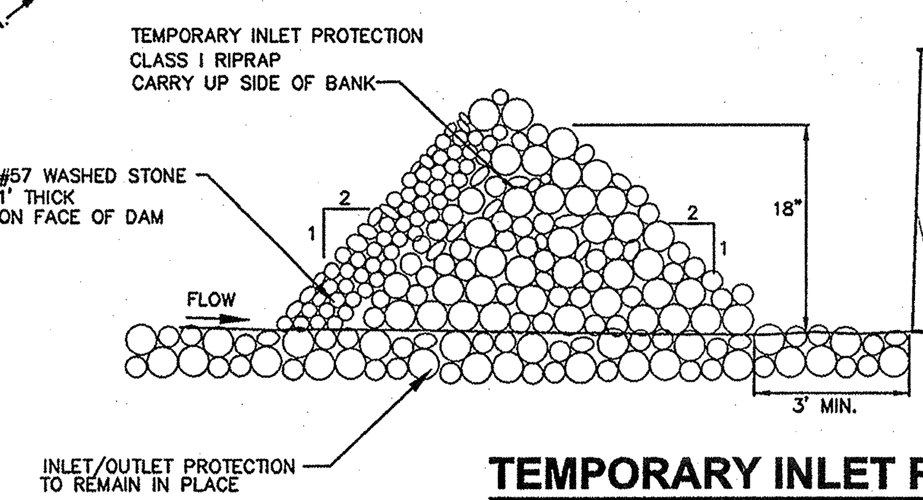

TEMPORARY INLET PROTECTION

NOTES:

1. RIRAP SHALL BE CHECKED AFTER EACH RAINFALL TO ENSURE AGAINST EROSION AND SHALL BE REPAIRED AS REQUIRED.
2. SEDIMENT SHALL BE REMOVED WHEN DEPTH OF SEDIMENT REACHES 1/2 HEIGHT OF DAM.
3. RIPRAP SHALL BE REMOVED AFTER AREA IS STABILIZED, TO ALLOW UNOBSTRUCTED FLOW OF STORM WATER THROUGH PIPE.

MINIMUM DIMENSIONS FOR LEVEL SPREADER				
DESIGN FLOW CFS	ENTRANCE WIDTH	DEPTH	END WIDTH	LENGTH
0 – 10	10'	0.5'	3'	10'

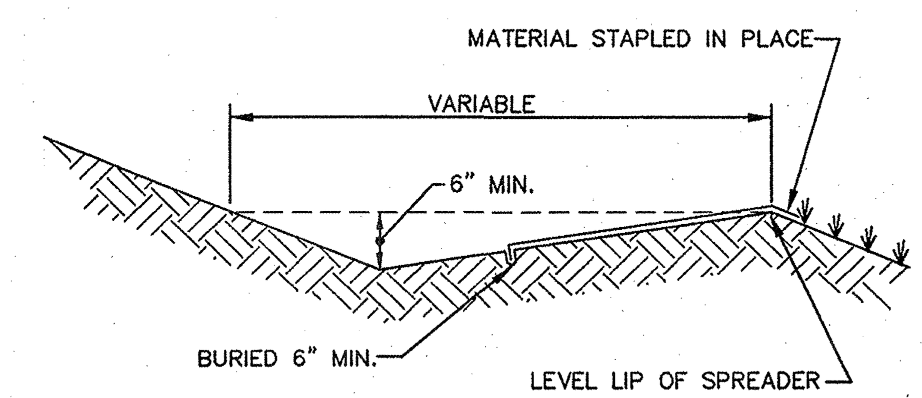

LEVEL SPREADER

NOTES:

1. THE MATTING SHOULD BE A MINIMUM OF 4 FT. WIDE EXTENDING 6 INCHES OVER THE LIP AND BURIED 6 INCHES DEEP IN A VERTICAL TRENCH ON THE LOWER EDGE. THE UPPER EDGE SHOULD BUTT AGAINST SMOOTHLY CUT SOD AND BE SECURELY HELD IN PLACE WITH CLOSELY SPACED HEAVY DUTY WIRE STAPLES AT LEAST 12 INCHES LONG.
2. ENSURE THAT THE SPREADER LIP IS LEVEL FOR UNIFORM SPREADING OF STORM RUNOFF.
3. CONSTRUCT THE LEVEL SPREADER ON UNDISTURBED SOIL.
4. CONSTRUCT A 20-FT. TRANSITION SECTION FROM THE DIVERSION CHANNEL TO BLEND SMOOTHLY TO THE WIDTH AND DEPTH OF THE SPREADER.
5. DISPERSE RUNOFF FROM THE SPREADER ACROSS A PROPERLY STABILIZED SLOPE NOT TO EXCEED 10%. MAKE SURE THE SLOPE IS SUFFICIENTLY SMOOTH TO KEEP FLOW FROM CONCENTRATING.
6. IMMEDIATELY AFTER ITS CONSTRUCTION, APPROPRIATELY SEED AND MULCH THE ENTIRE DISTURBED AREA OF THE SPREADER.

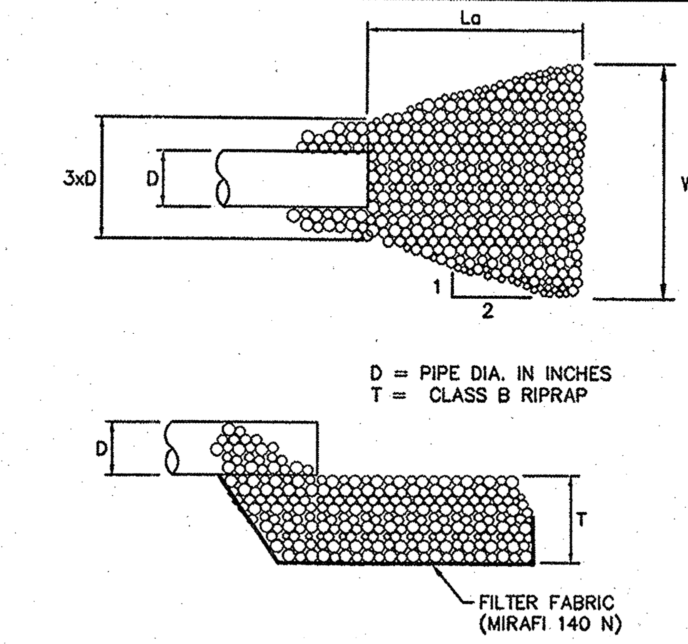

INLET/OUTLET PROTECTION

STAKEOUT COORDINATE DATA			
POINT	DESCR.	COORDINATES NORTH	COORDINATES EAST
A	BLDG. COR.	604063.11	564211.81
B	BLDG. COR.	604063.11	564157.81
C	RD CL @ EP	604303.51	564449.19
D	PC	604308.64	564362.05
E	CL @ END SCALE	604325.44	564288.57
F	CL @ END SCALE	604332.93	564218.97
G	PVMT. COR.	604349.09	564210.58
H	PVMT. COR.	604349.08	564120.96
I	CL INT.	604313.11	564184.81
J	PC	604313.11	564157.83
K	PC	604313.11	564215.31
L	CL	604123.11	564184.81
M	PT	604243.99	564270.31
N	PT	604258.11	564270.31
P	PC	604125.19	564270.31
Q	PT	604258.11	564102.83
R	PC	604125.19	564102.83
S	PVMT. COR.	604322.69	564120.55

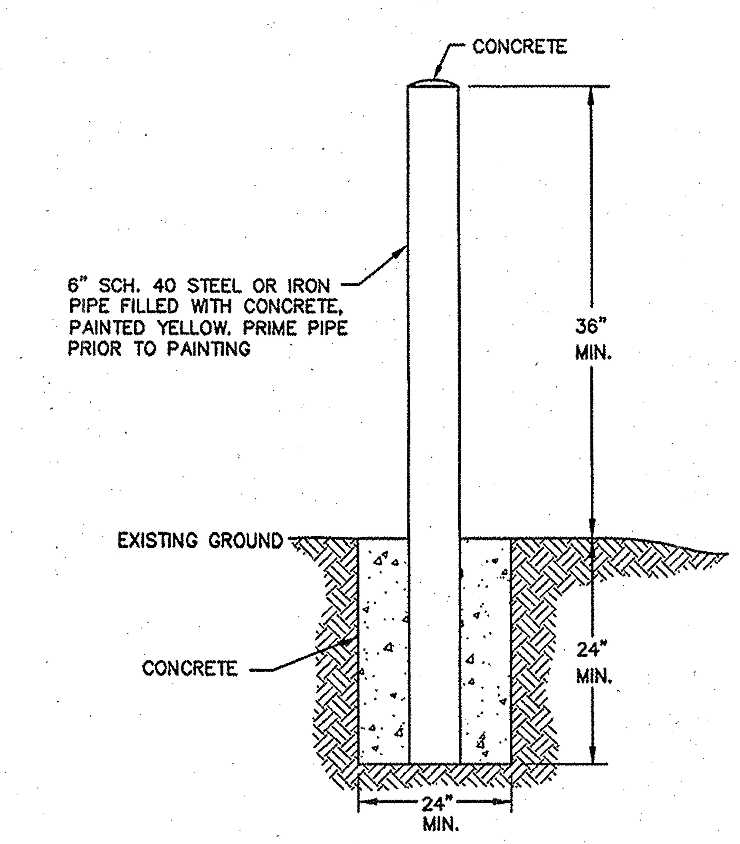

BOLLARD DETAIL

RECORD DRAWING
OCTOBER 20, 2004

NO.	DATE	BY	REVISION DESCRIPTION

McGill ASSOCIATES
ENGINEERING • PLANNING • FINANCE
55 BROAD STREET
ASHEVILLE, NC
PH. (828) 252-0575
FAX (828) 252-2518

NORTH CAROLINA PROFESSIONAL ENGINEER SEAL 24993 MARK D. CATHEY 10/20/04

SOLID WASTE TRANSFER STATION
GRAHAM COUNTY
GRAHAM COUNTY, NORTH CAROLINA

JOB NO.: 03310
DATE: SEPT 2003
SCALE: AS SHOWN
DESIGNED BY: DP
CADD BY: DP
DESIGN REVIEW:
CONST. REVIEW:
03310-Details-RD.dwg

MISCELLANEOUS DETAILS

SHEET
D2

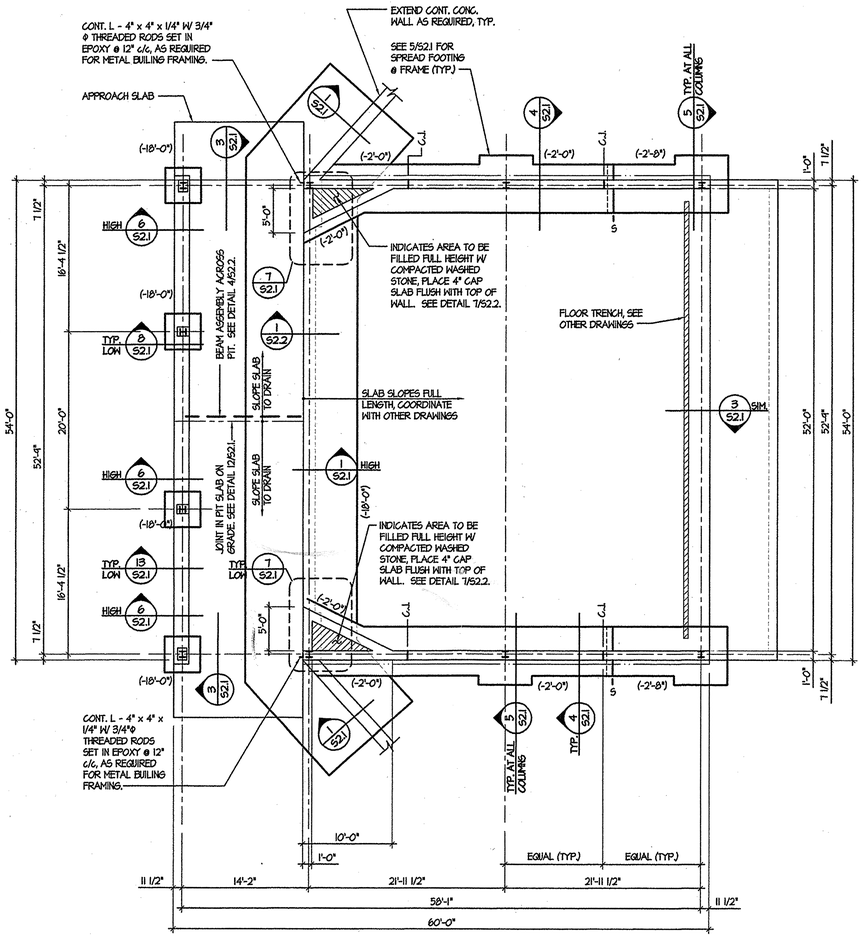

FOUNDATION PLAN

1/8" = 1'-0"

Dwg.# 020349.1-S2001.DWG

PLAN NOTES:

1. (-x' - xx") DENOTES TOP OF FOOTING ELEVATION BELOW FIN. SLAB.
2. F4 DENOTES 4'-0" x 4'-0" x 1'-4" WITH 5 - #5 BARS E.W. TOP & BOT., 3" CLEAR TYP. ANCHOR BOLTS TO SUIT BUILDING.
3. 'S' DENOTES FOOTING STEP. SEE 3/S2.2.
4. 'C.J.' DENOTES TYPICAL WALL CONSTRUCTION JOINT. SEE 2/S2.2.

GENERAL NOTES

A. DESIGN CRITERIA

1. THE STRUCTURE IS DESIGNED IN ACCORDANCE WITH THE NORTH CAROLINA STATE BUILDING CODE, 1996 EDITION WITH 1996/1997/1998/1999 REVISIONS.
2. THE DESIGN LOADS ARE AS FOLLOWS:
   LIVE LOAD
   ROOFS (GRAHAM COUNTY) _____ 20 PSF
   WIND LOAD
   BASIC DESIGN WIND VELOCITY ____ 90 MPH
   EXPOSURE _____ C
   IMPORTANCE FACTOR _____ 1.0
   SEISMIC LOAD
   SEISMIC HAZARD EXPOSURE GROUP = 1
   SEISMIC PERFORMANCE GROUP = C
   Av = 0.100
   Aa = 0.100
   S = 1.0
   SNOW LOAD
   GROUND SNOW LOAD _____ 20 PSF
   EXPOSURE FACTOR _____ 1.0
   IMPORTANCE FACTOR _____ 1.0
3. LATERAL LOAD REGISTANCE SYSTEM:
   METAL BUILDING FRAMES

B. FOUNDATION

1. ALL FOOTINGS SHALL BE FOUNDED ON UNDISTURBED SOIL OR A CONTROLLED FILL HAVING A BEARING CAPACITY OF 2500 PSF, AT ELEVATIONS SHOWN ON THE STRUCTURAL DRAWINGS.
2. ALL CONCRETE FOR FOOTINGS SHALL BE PLACED ON THE SAME DAY THAT THEIR EXCAVATIONS ARE MADE TO THE FINAL GRADE.
3. THE TOP OF ALL EXTERIOR FOOTINGS SHALL BE PLACED A MINIMUM OF 2'-0" BELOW FINISH GRADE.
4. CONTRACTOR SHALL VERIFY THE SOIL BEARING CAPACITY BEFORE ANY FOOTINGS ARE CAST. VERIFICATION SHALL BE SUBMITTED TO THE ENGINEER FOR APPROVAL.

C. CAST-IN-PLACE CONCRETE

1. CONCRETE IN THE LISTED AREAS SHALL HAVE THE FOLLOWING COMPRESSIVE STRENGTH (F'c) AT 28 DAYS:
   FOOTINGS _____ NORMAL WEIGHT _____ 3000 PSI
   INTERIOR SLAB ON GRADE _ NORMAL WEIGHT _____ 4000 PSI
   EXTERIOR SLAB ON GRADE _ NORMAL WEIGHT _____ 4000 PSI
   SITE RETAINING WALLS ____ NORMAL WEIGHT _____ 4000 PSI
2. ALL CONCRETE SHALL BE MADE IN ACCORDANCE WITH APPROVED DESIGN MIXES AS REQUIRED FOR THE JOB, SEE SPECS.
3. FOR CONCRETE MATERIALS, MIX, ADMIXTURES, SLUMP, TESTS, FORMWORK, AND WORKMANSHIP, REMOVAL OF FORMS, RESHORING, CURING, HARDENING AND PROTECTING; FINISHING, CLEANING AND PATCHING, SEE SPECIFICATIONS.
4. ALL CONCRETE WHICH IS EXPOSED TO OUTSIDE WEATHER SHALL CONTAIN ENTRAINED AIR.
5. CONCRETE THAT ARRIVES AT THE JOBSITE WITH A SLUMP GREATER THAN THE RANGE INDICATED IN THE SPECIFICATIONS SHALL BE REJECTED. CONCRETE WITH A SLUMP LESS THAN THE RANGE INDICATED IN THE SPECIFICATIONS SHALL HAVE AN APPROVED SUPER-PLASTICIZER ADDED SUCH THAT THE MINIMUM SPECIFIED SLUMP MAY BE ACHIEVED. THE ADDITION OF WATER AT THE JOBSITE FOR THE PURPOSE OF INCREASING THE SLUMP IS PROHIBITED.
6. GRADE SLABS SHALL FOR TRANSFER STATION SHALL BE 8" THICK, REINFORCED WITH #5 @ 8" EACHWAY PLACED 2" CLEAR FROM THE TOP SURFACE.
7. CONCRETE FOR SLABS SHALL BE PLACED CONTINUOUSLY UNLESS OTHERWISE NOTED.
8. THE CONTRACTOR SHALL BE RESPONSIBLE FOR FURNISHING AND INSTALLING ANCHOR BOLTS, CLIPS, INSERTS, CONNECTION PLATES, SLEEVES, SLOTS, AND OTHER REQUIRED ITEMS IN ACCORDANCE WITH THE CONTRACT DRAWINGS, AND IN COOPERATION WITH OTHER TRADES PRIOR TO PLACING THE CONCRETE.

D. REINFORCING STEEL

1. REINFORCING STEEL SHALL CONFORM TO ASTM A615, GRADE 60. LAP 40 x BAR DIAMETERS AT SPLICES U.O.N. SPLICES FOR REINFORCING SHALL BE STAGGERED, U.O.N.
2. WELDED WIRE FABRIC SHALL CONFORM TO ASTM A185. LAP ONE FULL MESH PLUS 2" AT SPLICES. FABRIC SHALL BE FURNISHED IN FLAT SHEETS.
3. ALL REINFORCING STEEL SHALL BE ACCURATELY AND SECURELY TIED AND ANCHORED IN PLACE TO PREVENT DISLOCATION DURING THE PLACING OPERATION.
4. PROVIDE CORNER BARS, 36 BAR DIAMETERS x 36 BAR DIAMETERS, AT EACH CONT. FOOTING AND BOND BEAM OUTSIDE REBAR.
5. PROVIDE 1 - NO. 4 REINFORCEMENT BAR X 4'-0" AT RE-ENTRANT CORNERS AND AROUND RECTANGULAR HOLES IN SLAB UNLESS NOTED OTHERWISE. PLACE BAR DIAGONAL TO CORNER WITH 1" CLEARANCE FROM THE TOP AND THE SIDE OF THE SLAB AT THE CORNER.

E. MISCELLANEOUS ITEMS

1. VERIFY ALL OPENING AND PENETRATION SIZE AND LOCATIONS WITH MECHANICAL EQUIPMENT AND ARCHITECTURAL DRAWINGS.
2. GROUT FOR SETTING BEARING SURFACES SHALL BE NON-SHRINK, EQUAL TO ' MASTERFLOW # 928 ' BY MASTERBUILDERS.
3. STRUCTURAL DRAWINGS SHALL BE USED IN CONJUNCTION WITH THE ARCHITECTURAL, MECHANICAL, ELECTRICAL, AND PLUMBING DRAWINGS, AND THE CONTRACTOR SHALL BE RESPONSIBLE FOR SEEING THAT THE WORK OF ALL TRADES IS COORDINATED WITH THE STRUCTURAL WORK.
4. WALLS RETAINING EARTH, OTHER THAN CANTILEVERED WALLS, SHALL BE ADEQUATELY BRACED UNTIL CONCRETE FOR SUPPORTING SLABS HAS BEEN PLACED AND CURED.
5. UNLESS SPECIFICALLY SHOWN OR NOTED ON THE DRAWINGS, NO STRUCTURAL MEMBER SHALL BE CUT, NOTCHED, BORED, OR OTHERWISE WEAKENED WITHOUT THE PERMISSION OF THE STRUCTURAL ENGINEER.
6. WHERE CONFLICTS OCCUR BETWEEN NOTES, DRAWINGS, OR SPECIFICATIONS, THE CONTRACTOR SHALL NOT PROCEED WITH THE AFFECTED WORK UNTIL A CLARIFICATION IS ISSUED BY THE STRUCTURAL ENGINEER.
7. STRUCTURAL EPOXY SHALL BE ' RAWL POWER-FAST ' OR APPROVED EQUIVALENT.

RECORD DRAWING
OCTOBER 20, 2004

SKA
SUTTON-KENNERLY & ASSOCIATES
CONSULTING ENGINEERS
530 HENDERSONVILLE ROAD
ASHEVILLE, NC 28803
828-274-4440, FAX 828-274-4488
www.suttonkennerly.com

CADD INFORMATION
SKA PROJECT NUMBER: 020349.0
SKA FILE NAME: 020349.1-S0101.dwg
PLOTTED: 8/6/2003 11:06:00 AM

McGill ASSOCIATES
ENGINEERING • PLANNING • FINANCE
55 BROAD STREET
ASHEVILLE, NC
PH. (828) 252-0575
FAX (828) 252-2518

NORTH CAROLINA PROFESSIONAL SEAL 10108 ENGINEER ROBIN L. KANUP 8/6/03

SOLID WASTE TRANSFER STATION
GRAHAM COUNTY
GRAHAM COUNTY, NORTH CAROLINA

JOB NO.: 020349.0
DATE: AUGUST 6, 2003
SCALE: AS NOTED
REVISION:

FOUNDATION PLAN AND GENERAL NOTES

SHEET
S1.1 OF 3

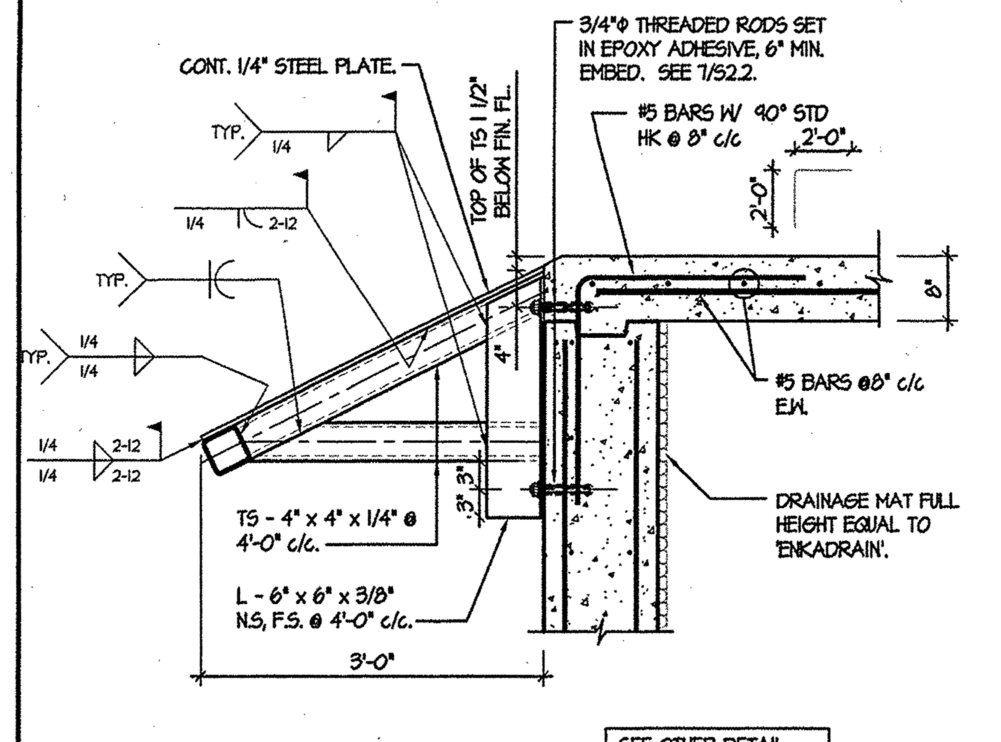

SEE OTHER DETAIL 1/S2.2 FOR RETAINING WALL AND REINFORCING.

1 / S2.1 SECTION
3/4" = 1'-0"
Dwg.# 020349.1-S6005.DWG

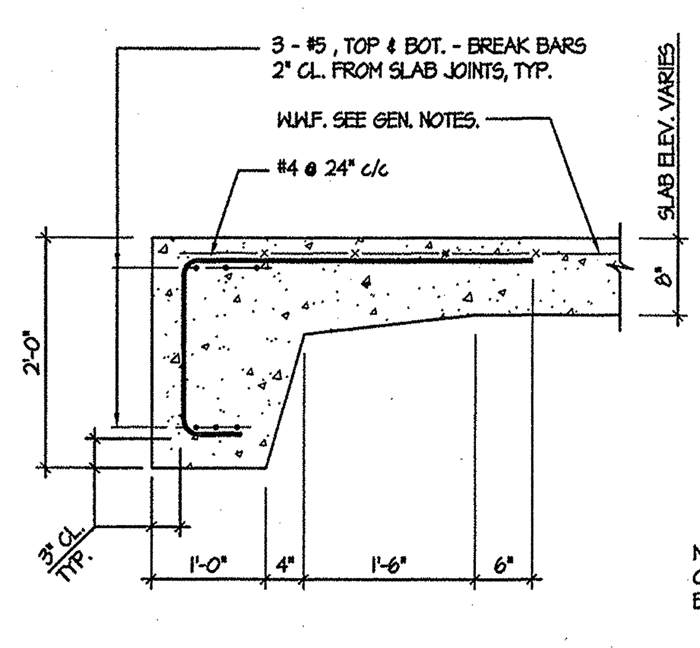

2 / S2.1 TYP. SLAB EDGE
3/4" = 1'-0"
Dwg.# 020349.1-S6004.DWG

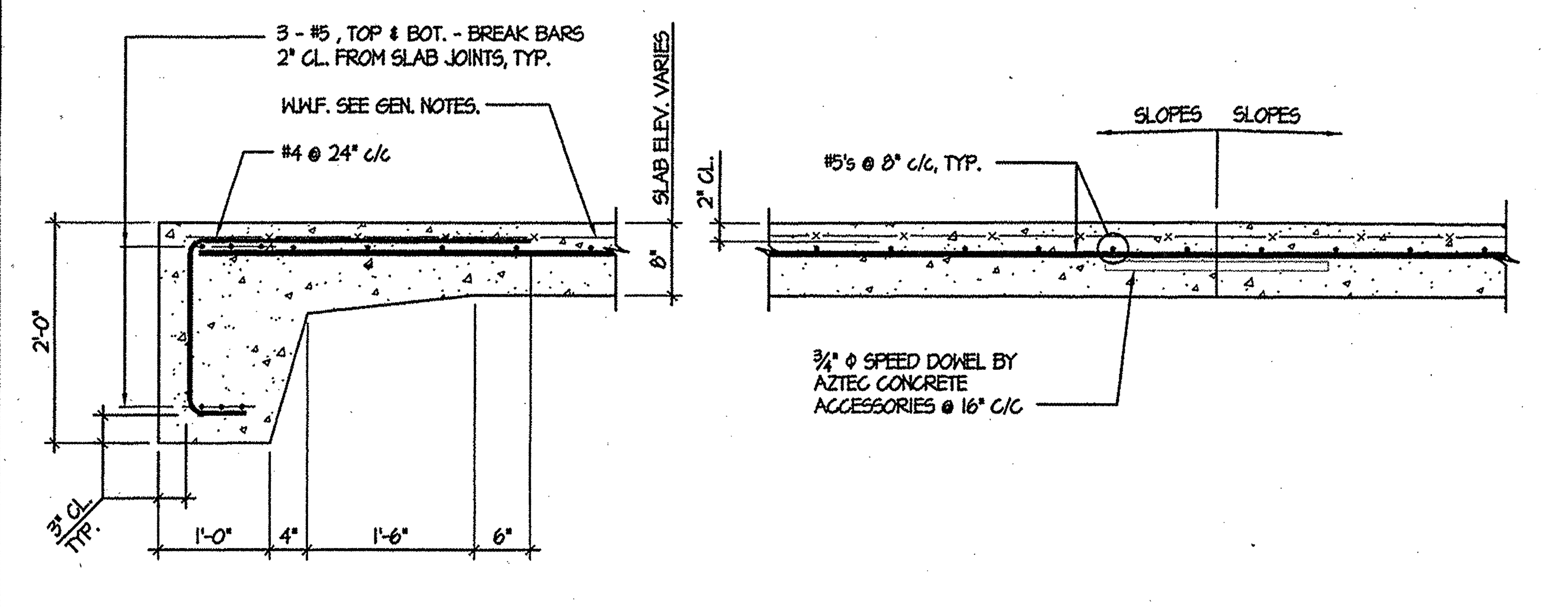

3 / S2.1 TYP. SLAB JOINT AT APPROACH APRONS
3/4" = 1'-0"
Dwg.# 020349.1-S6001.DWG

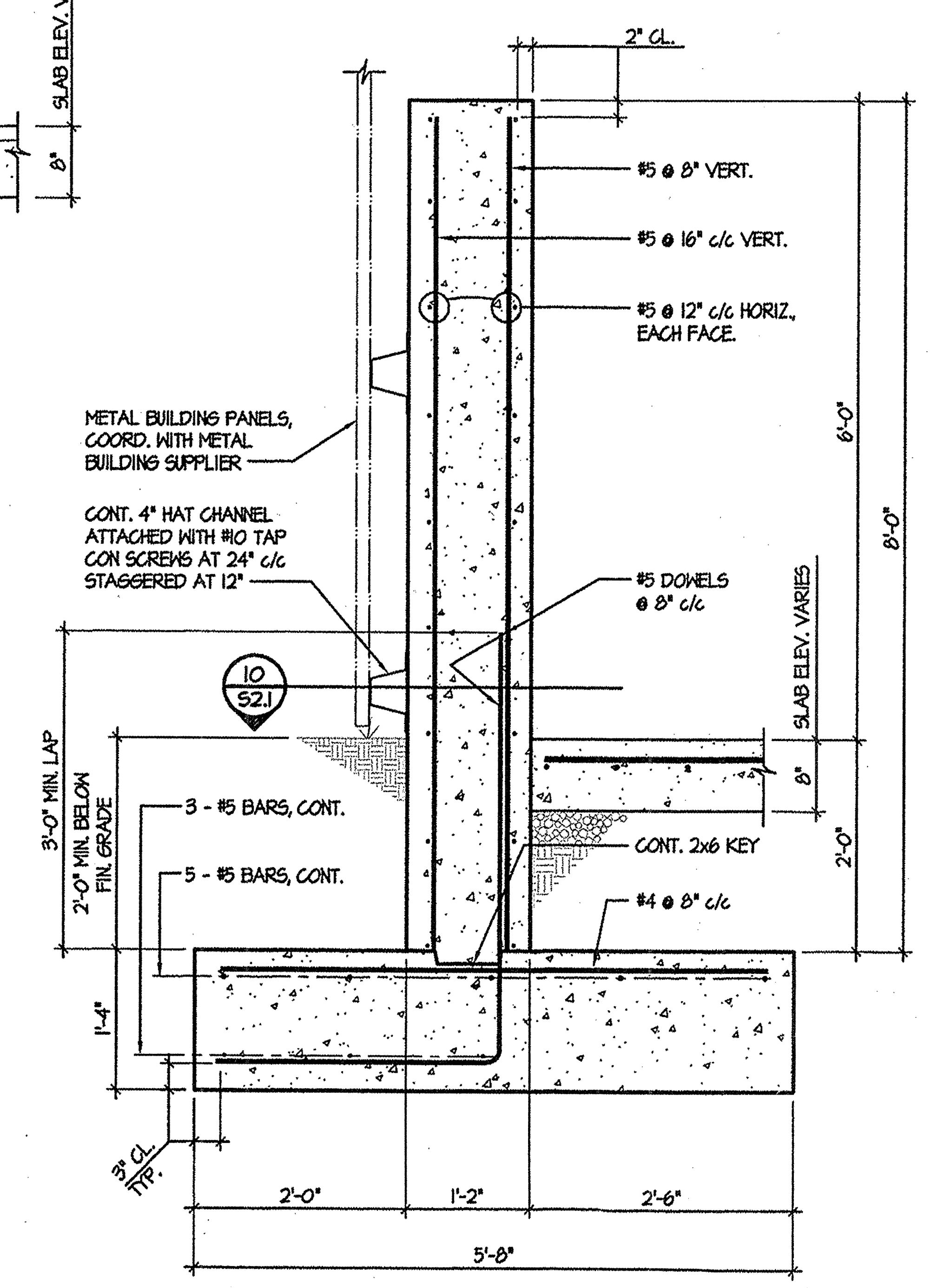

4 / S2.1 TYPICAL PUSH WALL SECTION
3/4" = 1'-0"
Dwg.# 020349.1-S6002.DWG

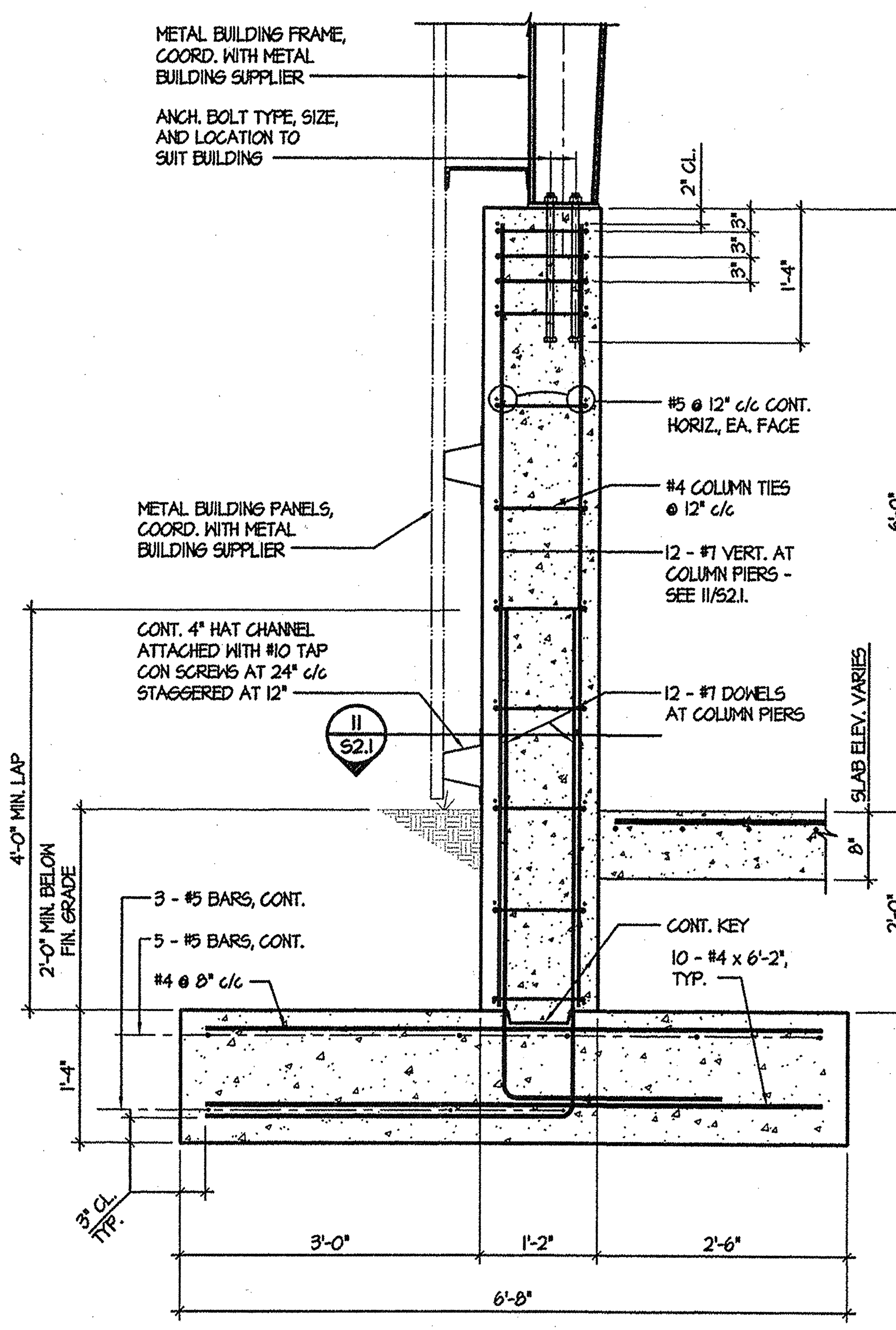

5 / S2.1 TYPICAL PIER SECTION
3/4" = 1'-0"
Dwg.# 020349.1-S6003.DWG

METAL BUILDING FRAME, COORD. WITH METAL BUILDING SUPPLIER. IN ADDITION TO LOADING SET FORTH BY THE SPECIFICATIONS. THE END WALL COLUMNS IN THE PIT SHALL BE DESIGNED TO WITHSTAND A 2000# LATERAL IMPACT LOAD. THE COLUMNS SHALL HAVE A MINIMUM FLANGE THICKNESS OF 3/8" AND A MINIMUM WEB THICKNESS OF 1/4".

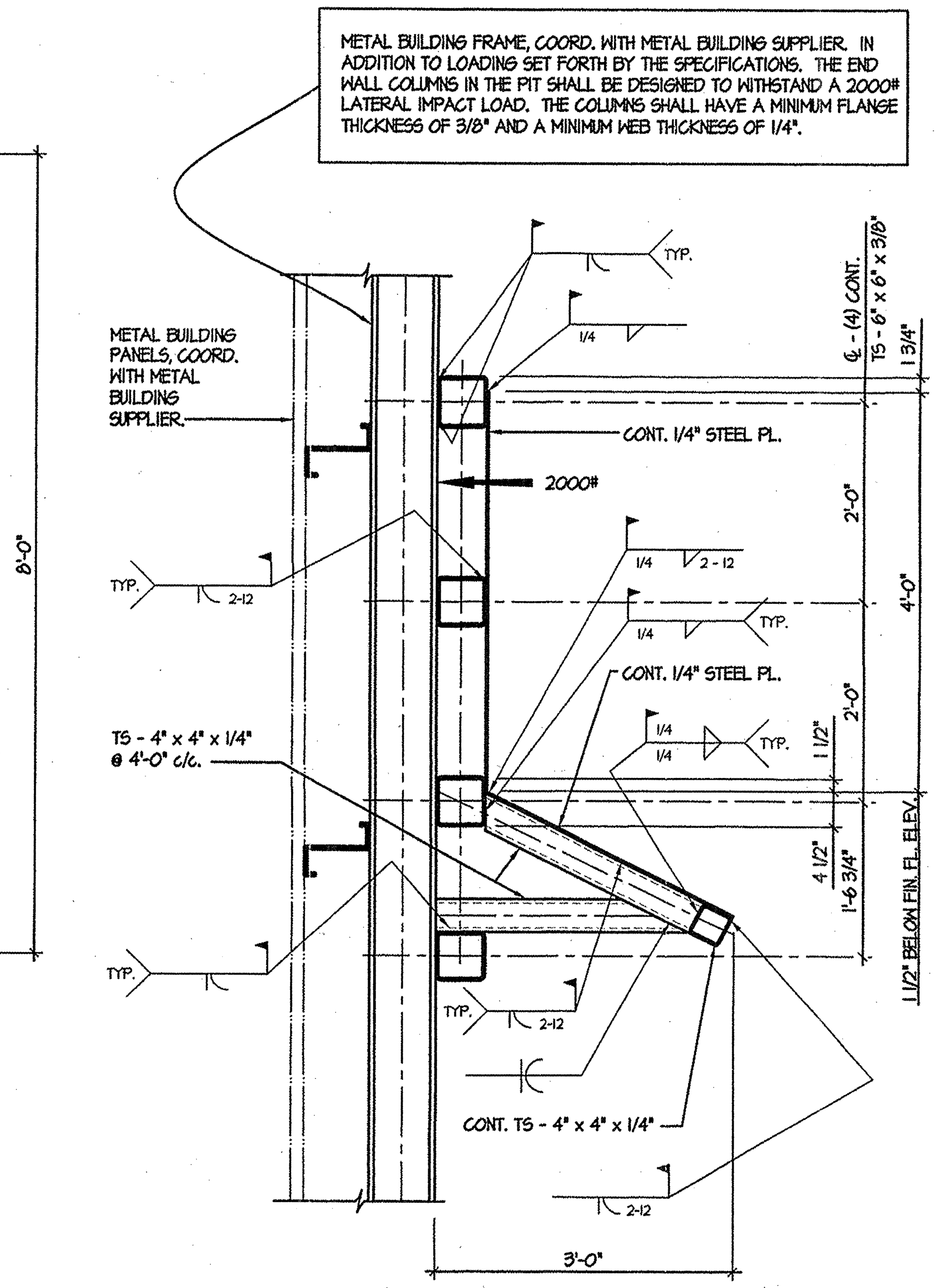

6 / S2.1 SECTION
3/4" = 1'-0"
Dwg.# 020349.1-S6006.DWG

SEE DETAIL 1/S2.1 FOR ITEMS NOT NOTED.

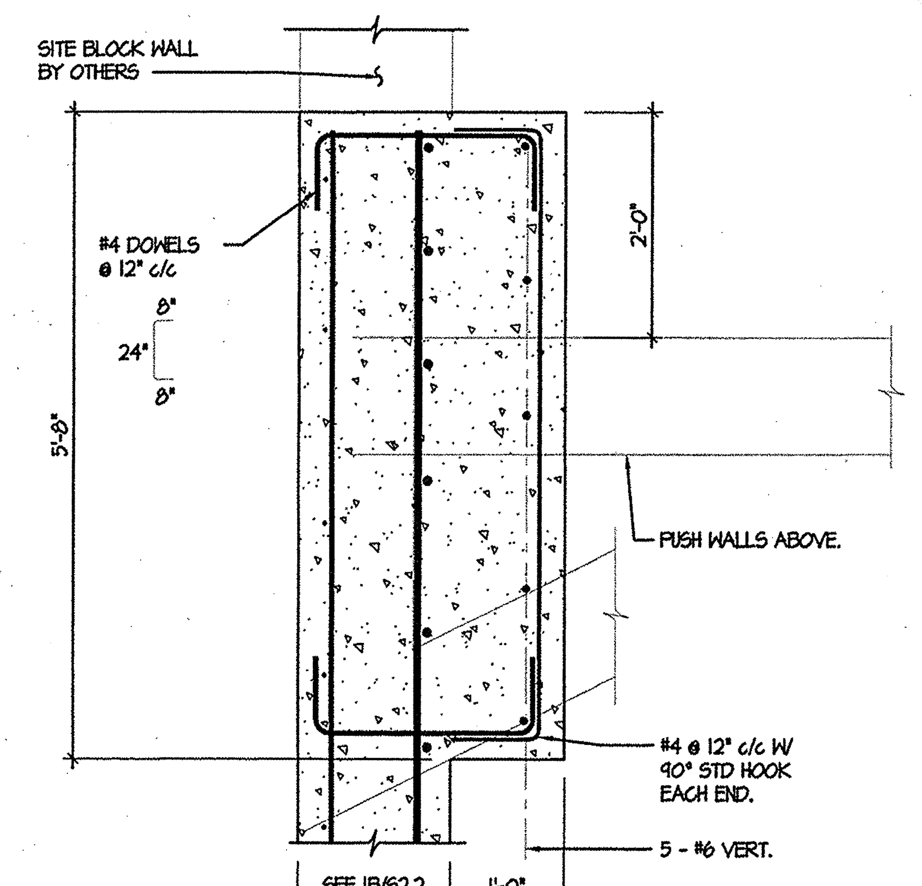

7 / S2.1 PIER UNDER END OF PUSH WALL
3/4" = 1'-0"
Dwg.# 020349.1-S6008.DWG

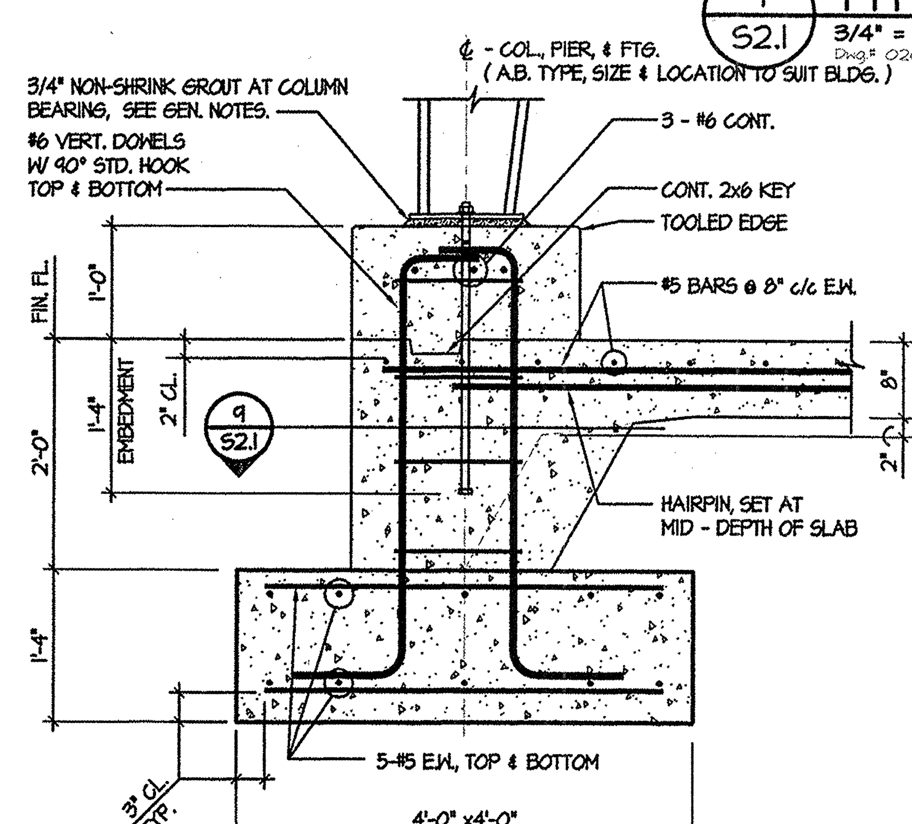

8 / S2.1 SECTION @ PIER
3/4" = 1'-0"
Dwg.# 020349.1-S6009.DWG

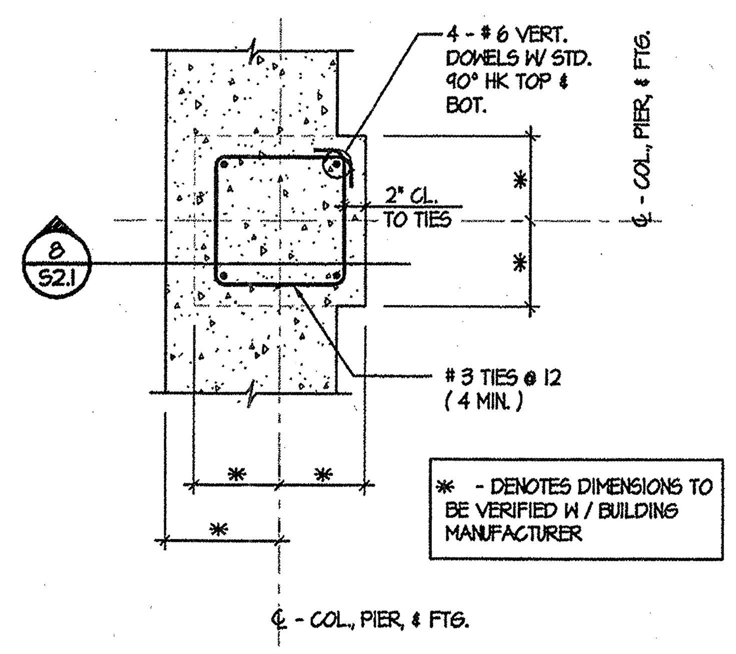

✻ - DENOTES DIMENSIONS TO BE VERIFIED W / BUILDING MANUFACTURER

9 / S2.1 SECTION
3/4" = 1'-0"
Dwg.# 020349.1-S6010.DWG

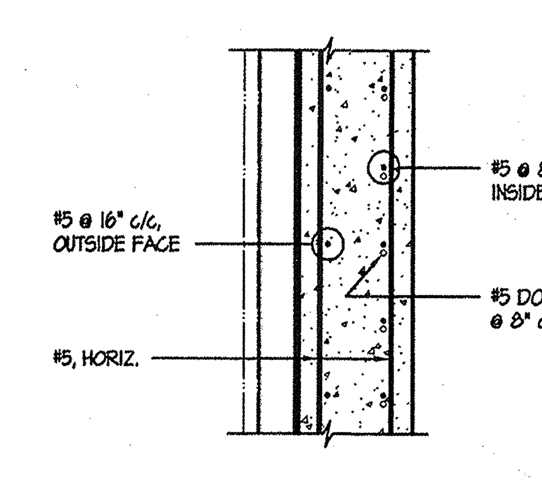

10 / S2.1 PLAN SECTION
3/4" = 1'-0"
Dwg.# 020349.1-S6011.DWG

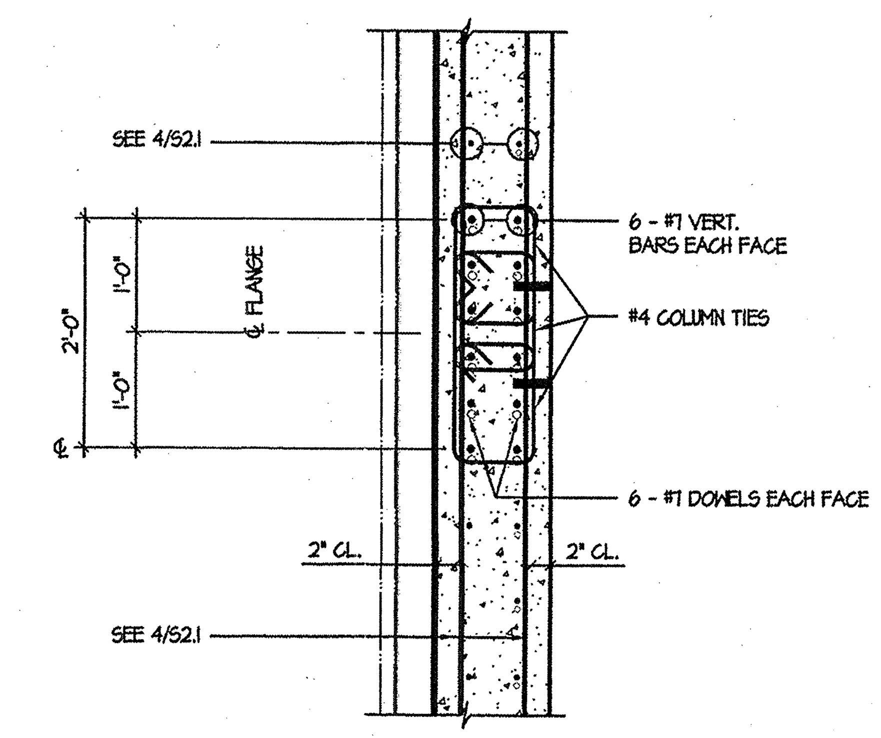

11 / S2.1 PLAN SECTION
3/4" = 1'-0"
Dwg.# 020349.1-S6012.DWG

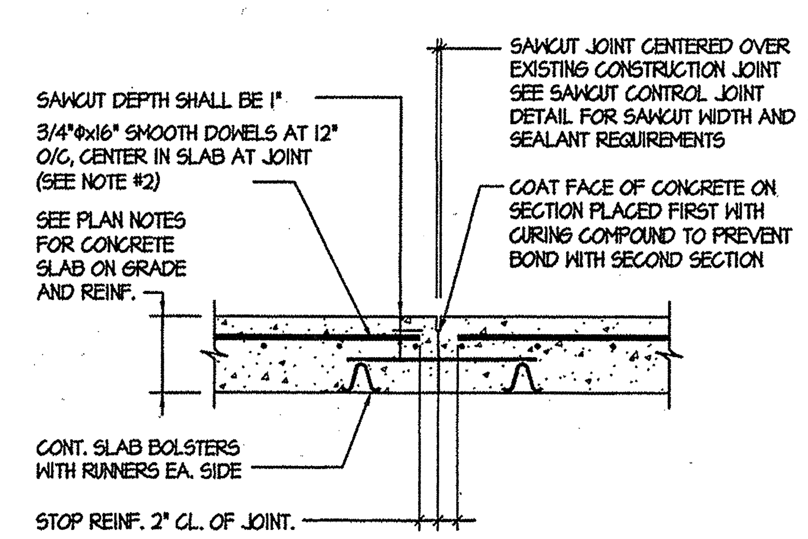

CONSTRUCTION JOINT

12 / S2.1 SLAB CONSTRUCTION JOINTS
3/4" = 1'-0"
Dwg.# 020349.1-S6018.DWG

CONTROL & CONSTRUCTION JOINT NOTES:

1. LOCATE JOINTS IN CONCRETE SLAB AS SHOWN ON FOUNDATION PLAN.
2. SLAB JOINT DOWELS:
   A. PROVIDE SMOOTH ROUND STEEL DOWELS IN SLAB JOINTS AS FOLLOWS: 4" THROUGH 6" SLAB, 3/4" X 16". DOWELS AT SHALL BE SAWCUT TO LENGTH.
   B. DOWELS SHALL BE SECURELY SUPPORTED DURING CONCRETE PLACEMENT ON CONTINUOUS SLAB BOLSTERS ON EACH SIDE OF THE JOINT. POSITION AND ALIGN DOWELS TO BE PERPENDICULAR TO THE JOINT AND PARALLEL TO THE TOP SLAB SURFACE.
   C. AT CONSTRUCTION JOINT, GREASE END OF DOWEL PLACED IN FIRST SECTION OF CONCRETE. AFTER CONCRETE IN FIRST SECTION HAS HARDENED, MOVE DOWEL BACK AND FORTH IN HOLE TO INSURE THAT BOND IS BROKEN. AT DOWELED CONTROL JOINT, GREASE ENTIRE LENGTH OF DOWEL.
3. SAW CUTTING:
   A. CONTROL JOINTS SHALL SAWCUT IMMEDIATELY AFTER FINISHING OF THE SLAB SURFACE HAS BEEN COMPLETED AT EACH JOINT LOCATION, BUT NOT BEFORE THE CONCRETE HAS SET SUFFICIENTLY TO SUPPORT THE SAW AND SAW OPERATOR WITHOUT LEAVING FOOTPRINTS OR WHEEL TRACKS ON THE SLAB SURFACE. SAW SHALL BE SPECIALIZED TYPE FOR CUTTING OF HARDENED, UNCURED CONCRETE WITHOUT DAMAGING THE CONCRETE (EX. SOFF-CUT).
   B. SAW CUTS AT CONSTRUCTION JOINTS MAY BE MADE WHEN CONTROL JOINTS ARE CUT OR AT ANY TIME PRIOR TO THE TIME THAT JOINT SEALANTS OR FILLERS ARE TO BE INSTALLED.
   C. IMMEDIATELY AFTER SAWCUTTING, CLEAN THE JOINT AND SLAB SURFACE. CLEANING SHALL REMOVE ALL LAITANCE, SAW DUST, AND OTHER CONTAMINANTS FROM SLAB SURFACE.
4. AFTER SAWING JOINTS AND CLEANING, COMMENCE CURING OF THE SLAB SURFACE AND JOINTS AS SPECIFIED.
5. JOINT SEALANT:
   A. SEE SPECIFICATIONS FOR JOINT SEALANT TYPES, APPLICATION AREAS FOR EACH TYPE OF SEALANT, AND OTHER REQUIREMENTS.
   B. DO NOT INSTALL JOINT SEALANT UNTIL A MINIMUM OF 60 DAYS AFTER SAWING THE JOINTS, OR AS LATE AS POSSIBLE PRIOR TO INSTALLING FLOOR FINISHES.
   C. DO NOT INSTALL JOINT SEALANT UNTIL SLAB TEMPERATURE HAS STABILIZED AT NORMAL SERVICE LEVEL.
   D. IMMEDIATELY BEFORE INSTALLING JOINT SEALANT, CLEAN AND PRIME JOINT SURFACES AS RECOMMENDED BY SEALANT MANUFACTURER.
   E. USE RIGID OR SEMI-RIGID SEALANTS, PLACE BOND BREAKER TAPE IN BOTTOM OF JOINT TO PREVENT LEAKAGE OF SEALANT; NO BACKER ROD IS REQUIRED. OVERFILL JOINTS AND THEN CUT OR GRIND FLUSH WITH SLAB SURFACE.
   F. REMOVE ANY EXCESS SEALANT THAT IS ABOVE THE FINISHED FLOOR SURFACE ON EITHER SIDE OF THE JOINT PRIOR TO PLACEMENT OF ANY FLOOR FINISHES.

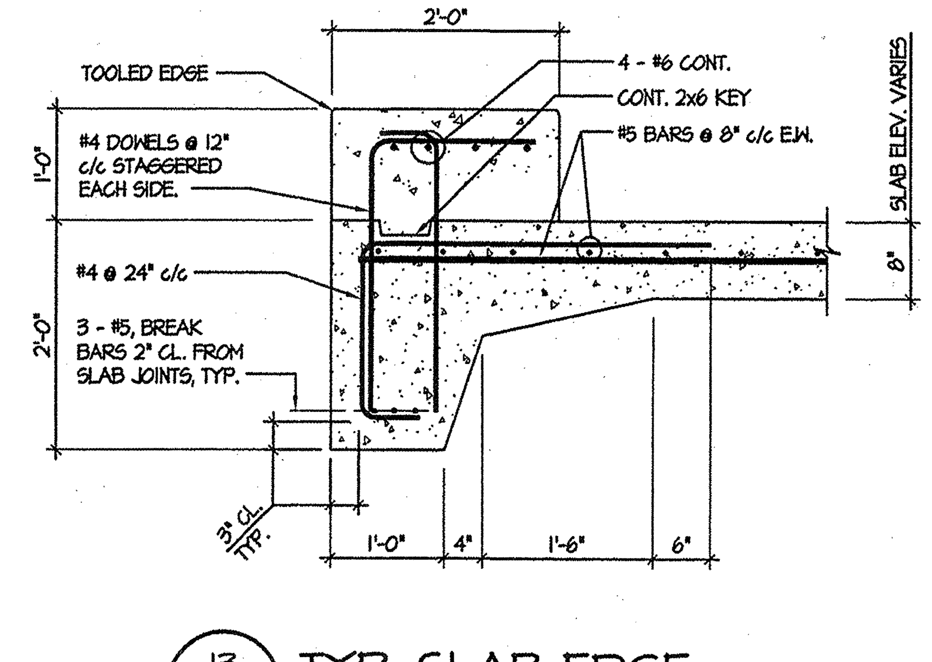

13 / S2.1 TYP. SLAB EDGE
3/4" = 1'-0"
Dwg.# 020349.1-S6017.DWG

RECORD DRAWING
OCTOBER 20, 2004

SKA
SUTTON-KENNERLY & ASSOCIATES
CONSULTING ENGINEERS
530 HENDERSONVILLE ROAD
ASHEVILLE, NC 28803
828-274-4440, FAX 828-274-4488
www.suttonkennerly.com

CADD INFORMATION
SKA PROJECT NUMBER: 020349.0
SKA FILE NAME: 020349.1-S0201.dwg
PLOTTED: 8/6/2003 11:13:00 AM

McGill
ASSOCIATES
ENGINEERING • PLANNING • FINANCE
55 BROAD STREET
ASHEVILLE, NC
PH. (828) 252-0575
FAX (828) 252-2518

NORTH CAROLINA PROFESSIONAL ENGINEER SEAL 10103 ROBIN L. KANIPE 8/6/03

SOLID WASTE
TRANSFER STATION
GRAHAM COUNTY
GRAHAM COUNTY, NORTH CAROLINA

JOB NO.: 020349.0
DATE: AUGUST 6, 2003
SCALE: AS NOTED
REVISION:

FOUNDATION DETAILS

SHEET
S2.1 OF 3

RETAINING WALL SCHEDULE

	DIMENSIONS						REINFORCEMENT			
HEIGHT 'H'	'A'	'B'	'D'	'L'	'T'	'K'	'D' DWLS.	'V' BARS	'T' BARS	'L' BARS
6'-0"	1'-3"	1'-6"	1'-2"	2'-2"	1'-0"	0	#5 @ 14"	#5 @ 14"	#5 @ 14"	5 - #4
8'-0"	1'-4"	2'-0"	1'-2"	2'-2"	1'-0"	0	#5 @ 14"	#5 @ 14"	#5 @ 14"	7 - #4
10'-0"	2'-3"	2'-6"	1'-2"	2'-2"	1'-0"	0	#5 @ 9"	#5 @ 9"	#5 @ 14"	8 - #4
12'-0"	2'-4"	3'-0"	1'-2"	5'-4"	1'-0"	1'-6"	#5 @ 7"	#5 @ 14"	#5 @ 10"	9 - #4
14'-0"	3'-4"	3'-3"	1'-2"	6'-8"	1'-0"	2'-0"	#5 @ 4 1/2"	#5 @ 9"	#5 @ 7 1/2"	12 - #4
16'-0"	4'-4"	4'-3"	1'-2"	6'-0"	1'-2"	2'-0"	#6 @ 4"	#6 @ 8"	#6 @ 9"	15 - #4
18'-0"	6'-0"	4'-6"	1'-8"	6'-10"	1'-2"	3'-3"	#8 @ 6"	#8 @ 12"	#8 @ 12"	20 - #4

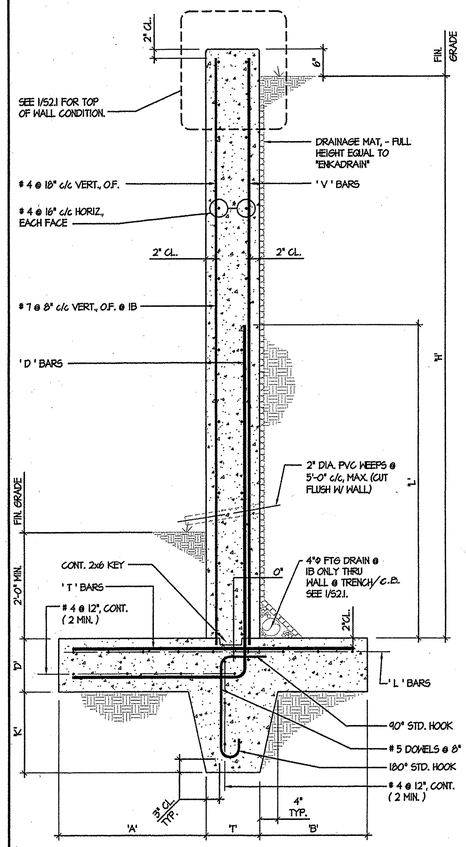

1 S2.2 RETAINING WALL SECTION
3/4" = 1'-0"
Dwg# 020349.1-S6007.DWG

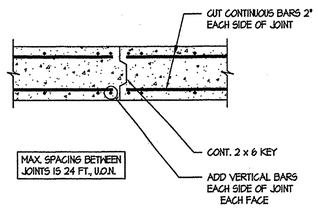

2 S2.2 TYPICAL WALL CONSTRUCTION JOINT DETAIL
3/4" = 1'-0"
Dwg# 020349.1-S6007.DWG

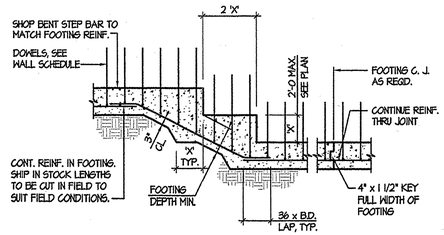

3 S2.2 TYPICAL FOOTING STEP & FOOTING C. J. DETAIL
3/4" = 1'-0"
Dwg# 020349.1-S6007.DWG

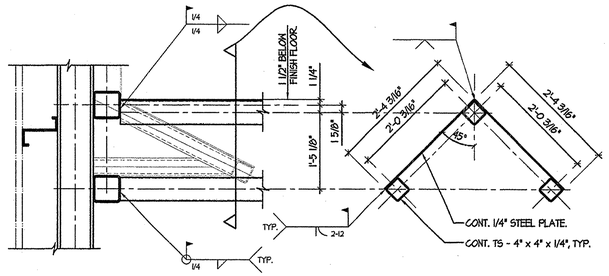

SEE DETAIL 6/S2.1 FOR ITEMS NOT NOTED.

4 S2.2 SECTION
3/4" = 1'-0"
Dwg# 020349.1-S6016.DWG

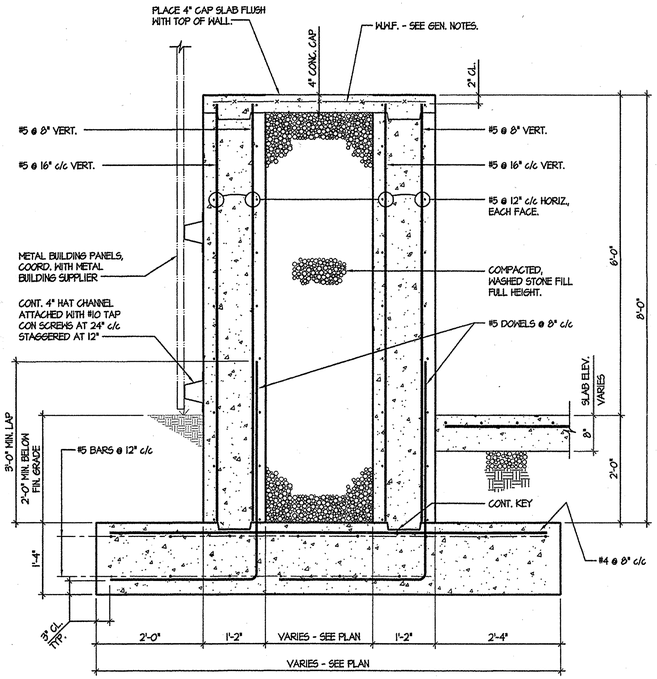

5 S2.2 TYPICAL DOUBLE PUSH WALL SECTION
3/4" = 1'-0"
Dwg# 020349.1-S6013.DWG

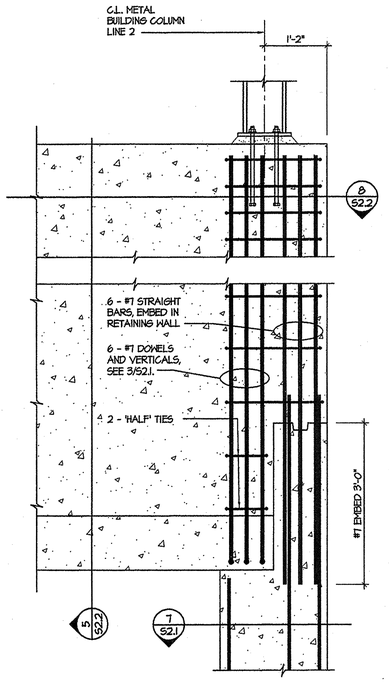

6 S2.2 SECTION
3/4" = 1'-0"
Dwg# 020349.1-S6023.DWG

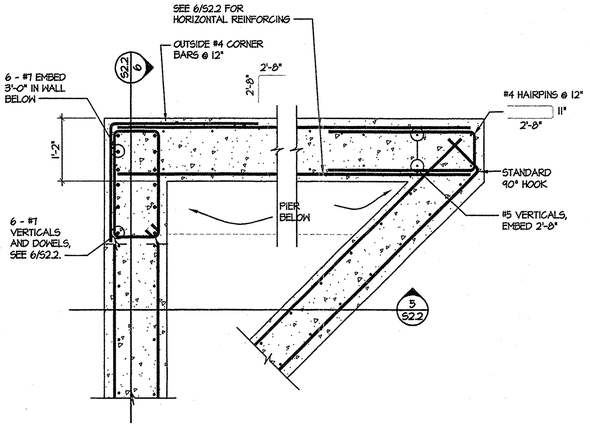

7 S2.2 TYPICAL DOUBLE PUSH WALL PLAN
3/4" = 1'-0"
Dwg# 020349.1-S6014.DWG

RECORD DRAWING
OCTOBER 20, 2004

McGill ASSOCIATES
ENGINEERING • PLANNING • FINANCE
55 BROAD STREET
ASHEVILLE, N.C. 28801
PH (828) 252-0516
FAX (828) 252-2518

NORTH CAROLINA PROFESSIONAL ENGINEER SEAL 10103 ENGINEER ROBIN L. KNUPE 8/6/03

SOLID WASTE TRANSFER STATION
GRAHAM COUNTY
GRAHAM COUNTY, NORTH CAROLINA

JOB NO.: 020349.0
DATE: AUGUST 6, 2003
SCALE: AS NOTED
REVISION:

FOUNDATION DETAILS

SKA
SUTTON-KENNERLY & ASSOCIATES
CONSULTING ENGINEERS
530 HENDERSONVILLE ROAD
ASHEVILLE, NC 28803
828-274-4440, FAX 828-274-4488
www.suttonkennerly.com

CADD INFORMATION
SKA PROJECT NUMBER: 020349.0
SKA FILE NAME: 020349.1-S0202.dwg
PLOTTED: 8/6/2003 11:17:00 AM

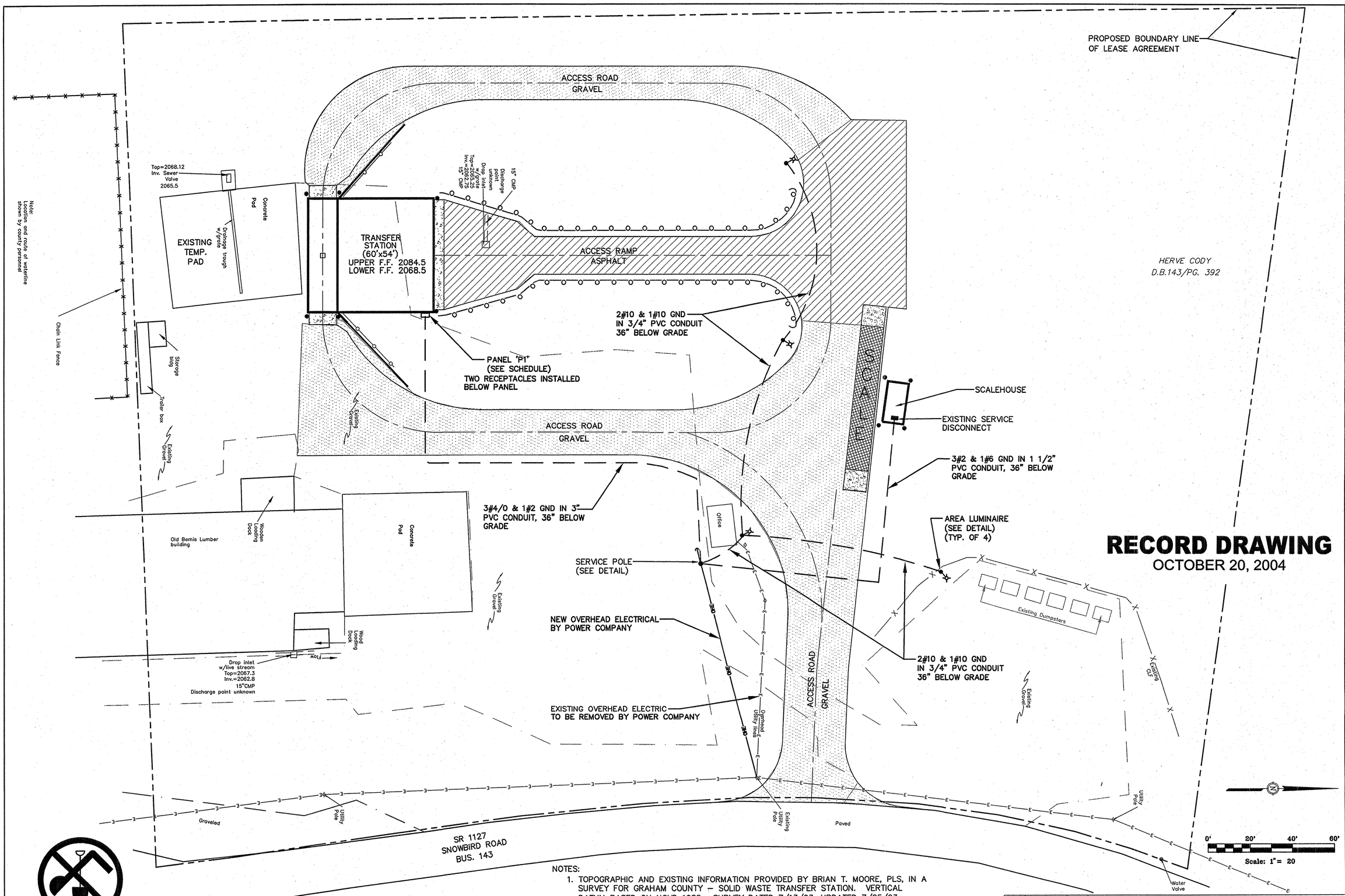

RECORD DRAWING
OCTOBER 20, 2004

NOTES:

1. TOPOGRAPHIC AND EXISTING INFORMATION PROVIDED BY BRIAN T. MOORE, PLS, IN A SURVEY FOR GRAHAM COUNTY – SOLID WASTE TRANSFER STATION. VERTICAL DATUM BASED ON NGVD 1988. SURVEY DATED 7/13/03, UPDATED 7/25/03.
2. THE LOCATION OF EXISTING UTILITIES IS APPROXIMATE. CONTRACTOR SHALL CONTACT ULOCO & APPROPRIATE UTILITY AGENCIES PRIOR TO EXCAVATION.
3. CONTRACTOR WILL BE PROVIDED A DIGITAL FILE OF SITE PLANS FOR STAKING PURPOSES.
4. DUMPSTERS PROVIDED BY GRAHAM COUNTY.

BEFORE YOU DIG!
CALL 1-800-632-4949
N.C. ONE-CALL CENTER
IT'S THE LAW!

NO.	DATE	BY	REVISION DESCRIPTION

McGill ASSOCIATES
ENGINEERING • PLANNING • FINANCE
55 BROAD STREET
ASHEVILLE, NC
PH. (828) 252-0575
FAX (828) 252-2518

NORTH CAROLINA PROFESSIONAL ENGINEER SEAL 24993 MARK D. CATHEY

SOLID WASTE TRANSFER STATION
GRAHAM COUNTY
GRAHAM COUNTY, NORTH CAROLINA

JOB NO.: 03310
DATE: SEPT. 2003
SCALE: 1" = 20'
DESIGNED BY: DP
CADD BY: DP
DESIGN REVIEW: ____
CONST. REVIEW: ____
03310-E1-RD.dwg

ELECTRICAL SITE PLAN

SHEET
E1

PANEL DESIGNATION: M
VOLTAGE: 120/240V, 1ø, 3W
AMPERES: 200A

LOCATION: SERVICE POLE
MAIN: MLO
PANEL MOUNTING: NEMA 3R

LOAD SERVED	CONNECTED LOAD (KVA) L1	CONNECTED LOAD (KVA) L2	CIRCUIT BREAKER AMPS	CIRCUIT BREAKER POLES	CKT NO.	CKT NO.	CIRCUIT BREAKER POLES	CIRCUIT BREAKER AMPS	CONNECTED LOAD (KVA) L2	CONNECTED LOAD (KVA) L1	LOAD SERVED
TRANSFER STATION	4.7	3.2	200	2	1	2	2	100	8.0	8.0	SCALE HOUSE
AREA LIGHTING	0.6	0.6	20	2	3	4	2				EQUIPPED SPACE
EQUIPPED SPACE				2	5	6	2				EQUIPPED SPACE
SUB-TOTAL	5.3	3.8							8.0	8.0	SUB-TOTAL

L1: 13.3 KVA
L2: 11.8 KVA

TOTAL CONNECTED LOAD = 25.1 KVA = 111 AMPS

PANEL 'M' UL LABELED AS SERVICE EQUIPMENT

PANEL SCHEDULE

PANEL DESIGNATION: P1
VOLTAGE: 120/240V, 1ø, 3W
AMPERES: 200A

LOCATION: TRANSFER STATION
MAIN: 200/2 MCB
PANEL MOUNTING: NEMA 3R

LOAD SERVED	CONNECTED LOAD (KVA) L1	CONNECTED LOAD (KVA) L2	CIRCUIT BREAKER AMPS	CIRCUIT BREAKER POLES	CKT NO.	CKT NO.	CIRCUIT BREAKER POLES	CIRCUIT BREAKER AMPS	CONNECTED LOAD (KVA) L2	CONNECTED LOAD (KVA) L1	LOAD SERVED
EXHAUST FAN EF-1	0.6	0.6	20	2	1	2	2	20	0.6	0.6	EXHAUST FAN EF-2
EQUIPPED SPACE				2	3	4	2				EQUIPPED SPACE
LIGHTS	1.5		20	1	5	6	1	20	0.5		EXT. LIGHTS, FRONT
LIGHTS		1.5	20	1	7	8	1	20		0.5	EXT. LIGHTS, REAR
LIGHTS	1.5			1	9	10	1	20			SPARE
SPARE				1	11	12	1	20			SPARE
SPARE				1	13	14	1	20			SPARE
EQUIPPED SPACE				1	15	16	1				EQUIPPED SPACE
				1	17	18	1				
				1	19	20	1				
				1	21	22	1				
				1	23	24	1				
SUB-TOTAL	3.6	2.1							1.1	1.1	SUB-TOTAL

L1: 4.7 KVA
L2: 3.2 KVA

TOTAL CONNECTED LOAD = 7.9 KVA = 39 AMPS

PANEL SCHEDULE

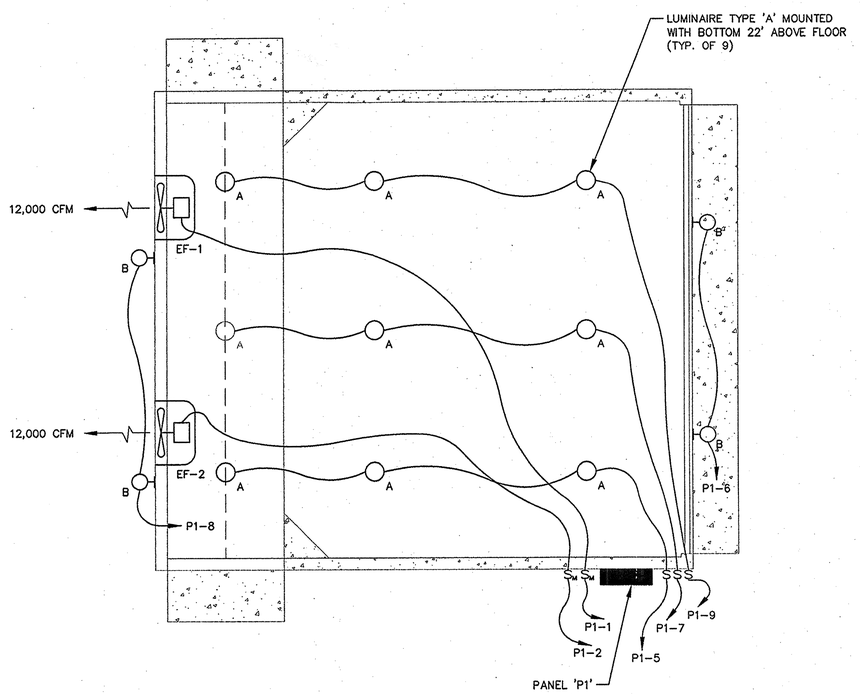

TRANSFER STATION PLAN - ELECTRICAL

SCALE: 1/8" = 1'-0"

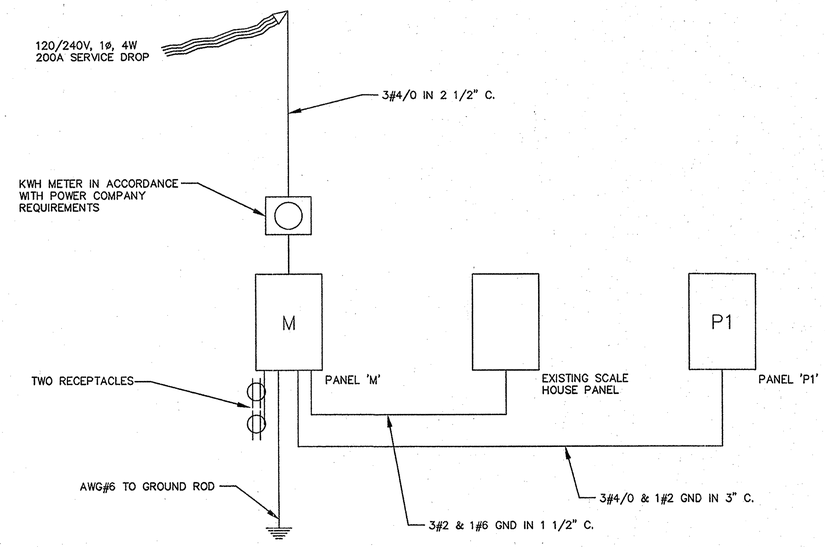

ONE-LINE DIAGRAM

RECORD DRAWING
OCTOBER 20, 2004

NO.	DATE	BY	REVISION DESCRIPTION

McGill ASSOCIATES
ENGINEERING • PLANNING • FINANCE
55 BROAD STREET
ASHEVILLE, NC
PH. (828) 252-0575
FAX (828) 252-2518

NORTH CAROLINA PROFESSIONAL ENGINEER SEAL 24093 MARK D. CAYTON 10/20/04

SOLID WASTE TRANSFER STATION
GRAHAM COUNTY
GRAHAM COUNTY, NORTH CAROLINA

JOB NO.: 03310
DATE: SEPT. 2003
SCALE: AS SHOWN
DESIGNED BY: RCM
CADD BY: JCH
DESIGN REVIEW: ____
CONST. REVIEW: ____
03310-E2-RD.dwg

TRANSFER STAION
FLOOR PLAN - ELECTRICAL

SHEET
E2

L:DWGS/03310/AtcGILL-Dwgs/03310-E2.DWG

LEGEND

- WIRE IN EXPOSED CONDUIT
- WIRE IN CONDUIT 36" BELOW GRADE
- P — HOME RUN TO PANEL
- G — AWG #2/0 COPPER GROUND WIRE
- GROUND CONNECTION
- GROUND ROD, 3/4" DIAMETER, 10' LONG, COPPERWELD
- J — JUNCTION BOX
- S — SINGLE POLE LIGHT SWITCH
- S_M — MANUAL MOTOR STARTER WITH PILOT LIGHT
- DUPLEX RECEPTACLE
- HID LIGHT FIXTURE, PENDANT MOUNTED (SEE LUMINAIRE SCHEULE FOR TYPE)
- WALL MOUNTED EXTERIOR LIGHT FIXTURE (SEE LUMINAIRE SCHEULE FOR TYPE)
- AREA LUMINAIRE
- 60/3/40 — SAFETY DISCONNECT SWITCH. NUMERALS INDICATE AMPERE RATING/POLES/FUSE RATINGS (AR='AS REQUIRED')
- CIRCUIT BREAKER PANELBOARD
- 60/3 — CIRCUIT BREAKER, NUMERALS INDICATE AMPS/POLES
- EXHAUST FAN

LUMINAIRE SCHEDULE

TYPE A – HIGH BAY HID ENCLOSED LUMINAIRE, 400W METAL HALIDE LAMP, CAST METAL HOUSING, 120 VAC BALLAST.

TYPE B – HID BRACKET LIGHT, WET LOCATION LABEL, PHOTOCELL CONTROLLER, GLASS REFRACTOR, CAST METAL HOUSING, 250W HIGH PRESSURE SODIUM LAMP, 120 VAC BALLAST.

TYPE C – ROADWAY LUMINAIRE, ENCLOSED, GLASS REFRACTOR, 250W HIGH PRESSURE SODIUM LAMP, CAST ALUMINUM HOUSING, PHOTOCELL CONTROLLER, 120 VAC BALLAST AND POLE MOUNTING BRACKET.

NOTE: LUMINAIRES SHALL BE MANUFACTURED BY LITHONIA, HUBBELL OR GENERAL ELECTRIC.

NOTES:

1. ALL ELECTRICAL EQUIPMENT, MATERIALS, AND INSTALLATION SHALL CONFORM TO THE 2002 NATIONAL ELECTRICAL CODE.
2. EXPOSED CONDUIT SHALL BE HEAVY WALL RIGID GALVANIZED STEEL.
3. CONDUIT BELOW GRADE SHALL BE PVC. STUB-UPS SHALL BE HEAVY WALL RIGID GALVANIZED STEEL. NO PVC CONDUIT SHALL BE INSTALLED EXPOSED.
4. JUNCTION AND DEVICE BOXES SHALL BE CAST AND GASKETED, WITH THREADED CONDUIT HUBS, AND SHALL BE CROUSE-HINDS TYPE FS.
5. WIRE SHALL BE THWN INSULATED STRANDED COPPER.
6. GROUNDING SHALL BE SECURE AND ELECTRICALLY CONTINUOUS THROUGHOUT THE PROJECT. INSTALL A GREEN INSULATED TW COPPER GROUND WIRE IN EACH CONDUIT RUN AND CONNECT ON BOTH ENDS FOR NEC REQUIRED EQUIPMENT GROUNDING.
7. DISCONNECT SWITCHES AND PANELS INSTALLED OUTSIDE AND IN THE RECYCLE CENTER SHALL BE NEMA 3R. EXTERIOR LIGHT SWITCHES AND RECEPTACLES SHALL BE WEATHERPROOF.
8. BOND METAL BUILDING STEEL TO GROUND.
9. PANELBOARDS SHALL HAVE COPPER BUS AND BOLT-ON CIRCUIT BREAKERS, AND SHALL BE SQUARE D OR GENERAL ELECTRIC.

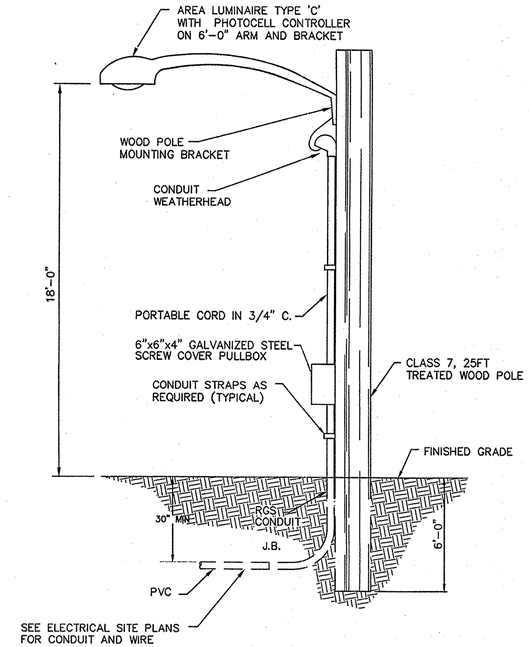

AREA LUMINAIRE DETAIL

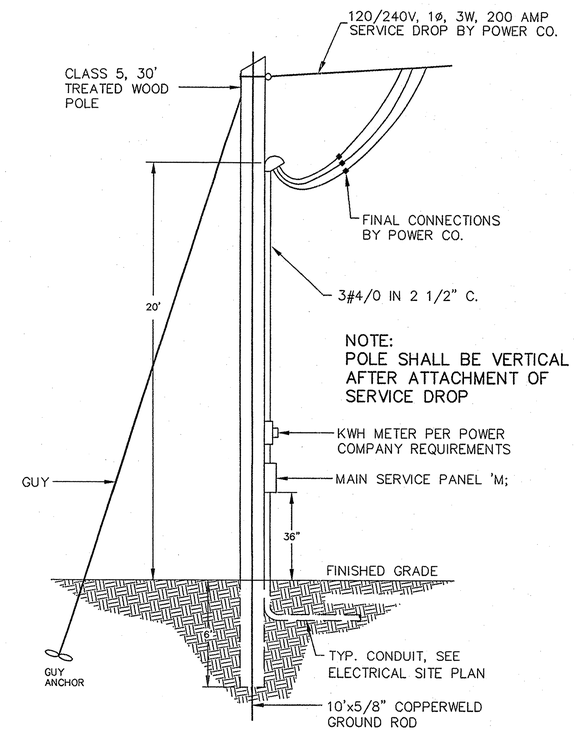

SERVICE POLE DETAIL

RECORD DRAWING
OCTOBER 20, 2004

NO.	DATE	BY	REVISION DESCRIPTION

McGill ASSOCIATES
ENGINEERING • PLANNING • FINANCE
55 BROAD STREET
ASHEVILLE, NC
PH. (828) 252-0575
FAX (828) 252-2518

NORTH CAROLINA PROFESSIONAL ENGINEER SEAL 5340 RICHARD C. SMITH 9/26/03

SOLID WASTE TRANSFER STATION
GRAHAM COUNTY
GRAHAM COUNTY, NORTH CAROLINA

JOB NO.: 03310
DATE: AUG., 2003
SCALE: AS SHOWN
DESIGNED BY: RCM
CADD BY: JCH
DESIGN REVIEW:
CONST. REVIEW:
03310-E3

LEGEND, NOTES, MISCELLANEOUS DETAILS

SHEET
E3

L:DWGS/03310/McGILL-Dwgs/03310-E3.DWG