ERM NC, Inc.

8000 Corporate Center Dr.
Suite 200
Charlotte, NC 28226
(704) 541-8345
(704) 541-8416 (fax)

July 15, 2011

NCDENR – Division of Waste Management
610 East Center Avenue
Suite 301
Mooresville, NC 28115

Attention: Mr. John Murray

Reference: R. J. Reynolds Tobacco Co., Permit No. 34-05
Response to Division of Waste Management Comments dated July 14, 2011 - Proposed Closure Modification – Edwards Road Ash Landfill
Rural Hall, North Carolina

Mr. Murray:

On behalf of R. J. Reynolds Tobacco Co., (Reynolds), ERM NC, Inc. (ERM) is submitting this letter in response to comments issued by your office dated July 14, 2011 for the referenced project. Each comment is listed below with appropriate response.

Comment #1. A stability analysis is required to be submitted for the final cover.

Response: Stability analyses for the final closure cap system are included as Figure 1 and Figure 2 attached. In summary, based on the minimum 24-inches of final cover material above the cap system, resistive friction forces are available at each component interface to exceed the downward slope driving forces from cover placement. Therefore, all components will remain in static condition (no mobilization) and each component will remain at rest with no tensile forces realized; Minimum factor of safety of 1.5.

Comment #2. Please send to me a paper copy of the Summary Report-Phase II Site Assessment dated March 10, 2011.

Response: A copy of the Summary Report-Phase II Site Assessment dated March 10, 2011 is attached with this letter as originally submitted to Division of Waste Management.

Comment #3. Page 5 of 5 of the plans states that the vegetative cover is 16 inches and/or 6 inches. Please clarify.

Response: Vegetative cover will be placed at a minimum layer thickness of 6-inches above the 18-inch protective cover layer. A revised Sheet 5 of 5 is attached including “6-In. Vegetative Layer” on the East Slope Benching detail (previously stated “16-In.).

Comment #4. What is the acreage of the capping project and the waste disposal area?

Response: The limits of waste at the landfill were determined by performing 60 test pits along the perimeter of the landfill area to expose the ash/natural soil interface. These locations were surveyed by Lawrence & Associates, P.A. for development of the survey plat. The area within waste limits is 17.01 acres. The anchor trench for the proposed liner system will extend 3 feet beyond the waste limits. Therefore the total area that will experience liner installation is 17.32 acres. Both of these areas are relative to plan view and does not account for slopes.

Comment #5. Has the landfill been tested to see if any gases (methane, hydrogen sulfur, etc) are being generated from the waste?

Response: A formal testing program for detection of gases has not been performed. There is no historical evidence of gas presence since Permit No. 34-05 does not contain requirements for gas monitoring or reporting for the Reynolds landfill. ERM has not observed the presence of noticeable gases during various site visits along with routine groundwater and surface water monitoring and closure inspection visits (2009 - Current) on behalf of Reynolds. ERM did not observe the noticeable presence of gases during the performance of previous test pit programs or extraction of undisturbed samples across the landfill cap. These programs encountered previously disposed ash at all test pit and sampling locations. Additionally, the landfill has maintained a well established stand of vegetation that does not indicate distressed areas typically associated with landfill gas production and migration.

If you should have any questions or require additional information, please contact me at (704) 541-8345 or dave.wasiela@erm.com.

Sincerely,
ERM NC, Inc.

NORTH CAROLINA PROFESSIONAL SEAL 20770 ENGINEER DAVID WAYNE WASIELA

7-15-11

David W. Wasiela, P.E.
Senior Project Engineer - NC Registration No. 20770

cc: Ms. Yongsheng (Yong) Yi - R. J. Reynolds Tobacco Company
Mr. Max Hopkins - R. J. Reynolds Tobacco Company

Attch: *Figure 1 - Landfill Cap Liner Section Slope Stability of Individual Components*
Figure 2 - Landfill Cap Liner Section Slope Stability of Individual Components - Maximum Slope Length
Summary Report-Phase II Site Assessment dated March 10, 2011
Sheet 5 of 5 Revised 7/14/11

Landfill Cap Liner Section Slope Stability of Individual Components
RJR Rural Hall Ash Landfill

Design Conditions:

Maximum Slope = 3H:1V = 18.4 degrees
Minimum Final Cover Soil Thickness = 24-in.
Unit Weight of Cover Soil = 110 pcf
Geocomposite - 6-oz./6-oz. Geotextile on both sides
- Angle of Friction Geotextile to Cover Soil = 26 degrees
- Angle of Friction Geotextile to LLDPE Micro Spike = 28 degrees
Synthetic Liner - Agru America 40-mil LLDPE Micro Spike
- Angle of Friction Geotextile to LLDPE Micro Spike = 28 degrees
- Angle of Friction LLDPE Micro Spike to Ash = 28 degrees

Note: Agru Reported Values for Friction are 32 degrees; Use 28 degrees Conservative

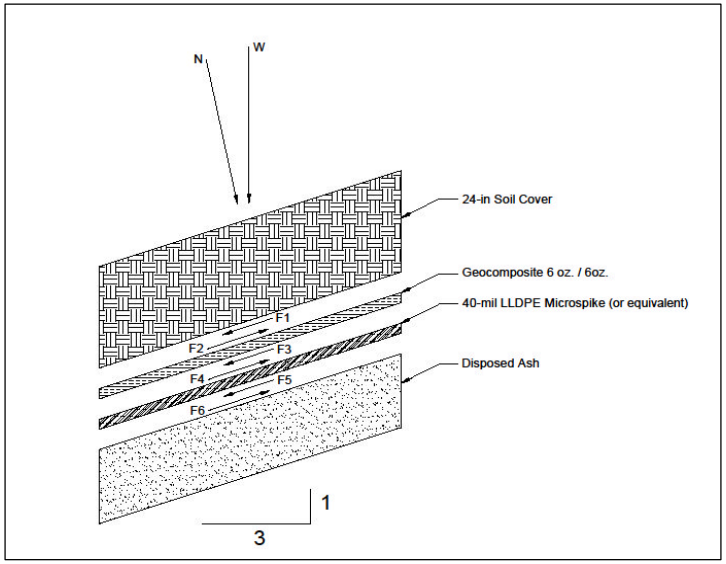

Calculations:

W = (2-ft)(1-ft)(1-ft)(110 lb./ft^3) = 220 lbs.
N = W(cos18.4^o) = 208.8 lbs.

F1, Driving Force Down Slope from Cover Soil

F1 = W(sin18.4^o) = 69.4 lbs.

F2, Available Resisting Force from Geocomposite Interface with Cover Soil

F2 = N(tan of angle of friction = 26°) = 101.8 lbs.

F2 Available > F1 Driving Force OK
Factor of Safety = 1.5

F3, Driving Force Transferred Through Geocomposite, Cannot Exceed F1 Generated

F3 = F1 = 69.4 lbs.

F4, Available Resisting Force from Geocomposite to LLDPE Micro Spike Membrane

F4 = N(tan of angle of friction = 28°) = 111.0 lbs.

F4 Available > F3 Driving Force OK
Factor of Safety = 1.6

F5, Driving Force Transferred Through Geocomposite, Cannot Exceed F3 Generated

F5 = F3 = 69.4 lbs.

F6, Available Resisting Force from LLDPE Micro Spike Membrane to Ash

F6 = N(tan of angle of friction = 28°) = 111.0 lbs.

F6 Available > F5 Driving Force OK
Factor of Safety = 1.6

Conclusion: Liner system is stable with no mobilization of components with a minimum factor of safety of 1.5

Reference: Koerner, Robert M., Designing with Geosynthetics, Second Edition, 1990
Agru-America Reported Testing Results for Large Box Shear Testing performed by SGI Testing Services, LLC

Figure - 1

Landfill Cap Liner Section Slope Stability of Individual Components - Maximum Slope Length; 30-ft High; Length = 94.7-ft
RJR Rural Hall Ash Landfill

Design Conditions:

Maximum Slope = 3H:1V = 18.4 degrees
Minimum Final Cover Soil Thickness = 24-in.
Unit Weight of Cover Soil = 110 pcf
Geocomposite - 6-oz./6-oz. Geotextile on both sides
- Angle of Friction Geotextile to Cover Soil = 26 degrees
- Angle of Friction Geotextile to LLDPE Micro Spike = 28 degrees

Synthetic Liner - Agru America 40-mil LLDPE Micro Spike
- Angle of Friction Geotextile to LLDPE Micro Spike = 28 degrees
- Angle of Friction LLDPE Micro Spike to Ash = 28 degrees

Note: Agru Reported Values for Friction are 32 degrees; Use 28 degrees Conservative

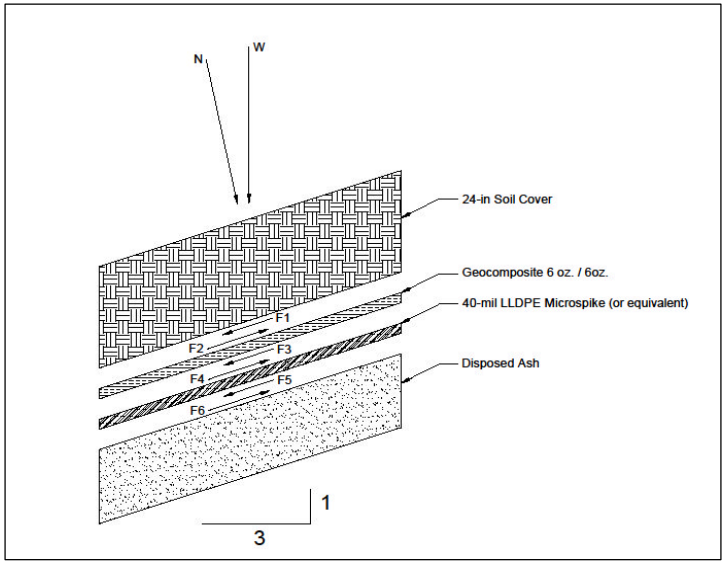

Calculations (Considers a 1-ft X 1-ft block of cap):

W =	(2-ft)(94.7-ft)(1-ft)(110 lb./ft^3) =	20,834.0 lbs.
N =	W(cos18.4^o) =	19,769.4 lbs.

F1, Driving Force Down Slope from Cover Soil

F1 =	W(sin18.4^o) =	6,575.2 lbs.

F2, Available Resisting Force from Geocomposite Interface with Cover Soil

F2 =	N(tan of angle of friction = 26°) =	9,641.5 lbs.
F2 Available > F1 Driving Force		OK
Factor of Safety =		1.5

F3, Driving Force Transferred Through Geocomposite, Cannot Exceed F1 Generated

F3 =	F1 =	6,575.2 lbs.

F4, Available Resisting Force from Geocomposite to LLDPE Micro Spike Membrane

F4 =	N(tan of angle of friction = 28°) =	10,511.4 lbs.
F4 Available > F3 Driving Force		OK
Factor of Safety =		1.6

F5, Driving Force Transferred Through Geocomposite, Cannot Exceed F3 Generated

F5 =	F3 =	6,575.2 lbs.

F6, Available Resisting Force from LLDPE Micro Spike Membrane to Ash

F6 =	N(tan of angle of friction = 28°) =	10,511.4 lbs.
F6 Available > F5 Driving Force		OK
Factor of Safety =		1.6

Conclusion: Liner system is stable with no mobilization of components with a minimum factor of safety of 1.5

Reference: Koerner, Robert M., Designing with Geosynthetics, Second Edition, 1990
Agru-America Reported Testing Results for Large Box Shear Testing performed by SGI Testing Services, LLC

Figure - 2

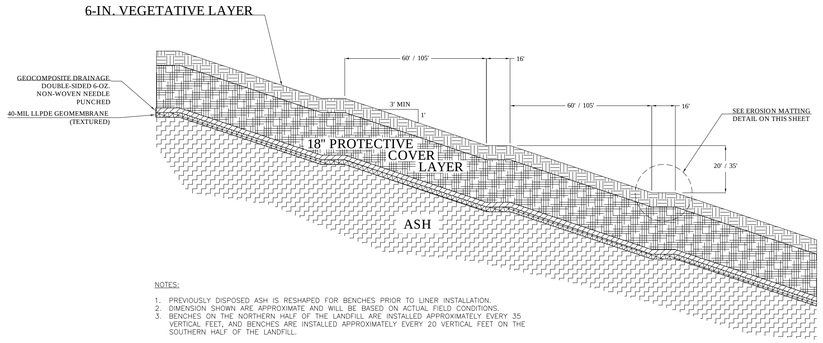

NOTES:

1. PREVIOUSLY DISPOSED ASH IS RESHAPED FOR BENCHES PRIOR TO LINER INSTALLATION.
2. DIMENSION SHOWN ARE APPROXIMATE AND WILL BE BASED ON ACTUAL FIELD CONDITIONS.
3. BENCHES ON THE NORTHERN HALF OF THE LANDFILL ARE INSTALLED APPROXIMATELY EVERY 35 VERTICAL FEET, AND BENCHES ARE INSTALLED APPROXIMATELY EVERY 20 VERTICAL FEET ON THE SOUTHERN HALF OF THE LANDFILL.

EAST SLOPE BENCHING DETAIL

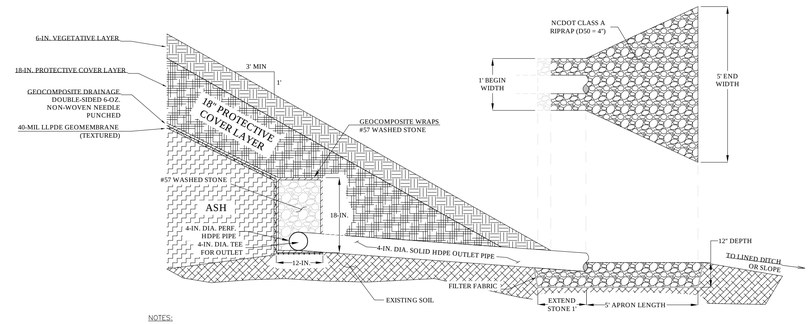

NOTES:

1. THE GRADE SHALL BE ZERO FOR THE LENGTH OF THE APRON.

ANCHOR TRENCH AND DRAIN OUTLET DETAIL

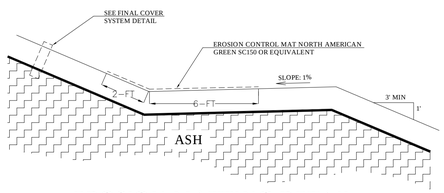

EROSION MATTING DETAIL

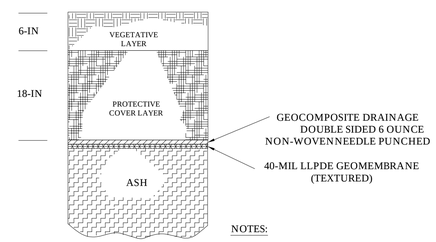

NOTES:

VEGETATIVE & PROTECTIVE SOIL LAYER ARE TAKEN FROM EXISTING FINAL COVER CURRENTLY IN PLACE.

SOILS WILL BE TEMPORARILY STOCKPILED AS THE LINER SECTION IS INSTALLED FOR FUTURE USE.

FINAL COVER SYSTEM DETAIL

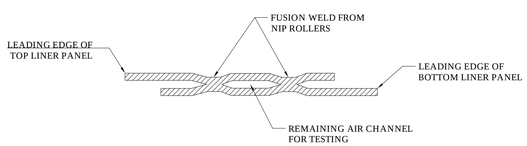

LLDPE DOUBLE HOT WEDGE FUSION WELD DETAIL

NOTES:

1. LEADING EDGES ARE OVERLAPPED A MINIMUM OF 6 INCHES PRIOR TO WELDING.
2. HDPE SURFACES SHALL BE CLEANED FREE OF DEBRIS AND SOIL PRIOR TO WELDING.

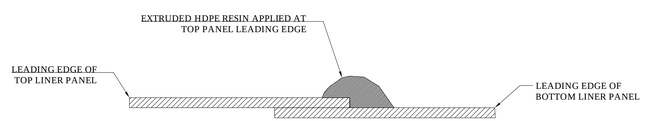

NOTE: LEADING EDGES ARE OVERLAPPED A MINIMUM OF 3 INCHES PRIOR TO WELDING.

LLDPE EXTRUSION WELD DETAIL

NOTES:

1. LEADING EDGES ARE OVERLAPPED A MINIMUM OF 6 INCHES PRIOR TO WELDING.
2. HDPE SURFACES SHALL BE CLEANED FREE OF DEBRIS AND SOIL PRIOR TO WELDING.
3. GRINDING OF HDPE SURFACES SHALL BE PERFORMED IN AREAS RECEIVING EXTRUDATE PRIOR TO WELDING TO SUPPLY AN ABRASIVE SURFACE. GRINDING BEYOND THE AREA RECEIVING EXTRUDATE IS NOT ALLOWED.

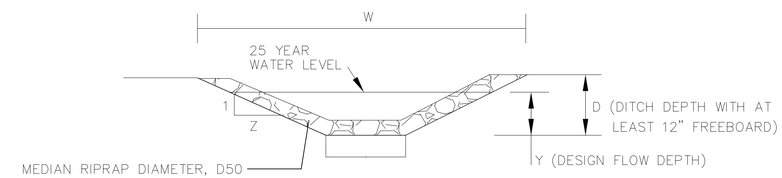

DITCH NO.	C	I	A(AC.)	Q_{25}(CFS)	S(MIN.)(ft./ft.)	D_{50}	Z	D	B	W	Y	V(FPS)	Q_{25}PROV. FULL FLOW (CFS)	COMMENTS
D-1	0.23	5.11	3.24	3.8	0.138	12"	2	1.5	4	10	0.35	2.36	3.9	D50 PROVIDED > D50 REQUIRED
D-2	0.23	6.05	2.16	3.0	0.257	12"	2	1.5	4	10	0.24	2.95	3.2	D50 PROVIDED > D50 REQUIRED
D-3	0.25	7.58	2.31	4.4	0.164	12"	2	1.5	4	10	0.34	2.89	4.6	D50 PROVIDED > D50 REQUIRED
D-4	0.25	6.05	0.98	1.5	0.32	12"	2	1.5	4	10	0.16	2.57	1.8	D50 PROVIDED > D50 REQUIRED
D-5	0.25	5.11	3.18	4.1	0.132	12"	2	1.5	4	10	0.47	1.80	4.2	D50 PROVIDED > D50 REQUIRED

DITCH CROSS-SECTION

NO.	DATE	APPR.	REVISION	NO.	DATE	APPR.	REVISION
1	7-14-11	DWW	East Slope Benching Detail; vegetative cover thickness from 16-in. to 6-in.				

RURAL HALL ASH LANDFILL

R.J. REYNOLDS TOBACCO COMPANY — RURAL HALL, NORTH CAROLINA

DRAWN BY: D. WASIELA
PROJECT ENGINEER:
DESIGN ENGINEER: D. WASIELA
PROJECT MANAGER:

LICENSE #C-2206
ERM NC, INC.
8000 CORPORATE CENTER DRIVE, SUITE 200
CHARLOTTE, NORTH CAROLINA 28226
(704) 541-8345

LANDFILL FINAL CAP CONSTRUCTION DETAILS

SCALE: NTS
DATE: 6/7/2010
PROJECT NO.: 0103137
AutoCAD 2002: LANDFILL CAP DETAILS.DWG

DRAWING NO. 5
REV. NO. 0
SHEET 5 OF 5