GlaxoWellcome

Carmen Johnson
32-06 3/20/12

November 14, 1995

Mr. James C. Coffey
Dept. of Environment, Health & Natural Resources
Solid & Hazardous Waste Management Branch
P.O. Box 2091
Raleigh, North Carolina 27687-2091

Subject: Solid Waste Permit Application
Glaxo Wellcome Inc. RTP/South Campus
(Former Burroughs Wellcome Facility)
3030 Cornwallis Road
Research Triangle Park

Dear Mr. Coffey:

Glaxo Wellcome Inc. currently has two medical waste incinerators located at the former Burroughs Wellcome Co./RTP facilities. These units are currently designated for incineration of non-hazardous solid waste generated on-site. These units are operated in accordance with the Division of Solid Waste's Medical Regulations, 15A NCAC 13B, and the facility's Air Quality Permit issued by the North Carolina Division of Environmental Management.

On October 31, 1995, Glaxo Wellcome Inc. (formerly known as Glaxo Inc.) and Burroughs Wellcome Co. merged creating a single company, Glaxo Wellcome Inc. As a result of the merger, Glaxo Wellcome Inc. wishes to optimize the utilization of the company's incineration capacity. As a result, Glaxo Wellcome Inc. is requesting a Solid Waste Permit which will allow for the incineration of waste from other Glaxo Wellcome Inc. facilities located in North Carolina.

Please find attached five copies of Glaxo Wellcome Inc.'s Solid Waste Permit Application for the RTP South Campus (Former Burroughs Wellcome Co. Facility).

If you have any questions, please feel free to contact Michael Geary at (919) 315-5705 or myself at (919) 315-3177.

Sincerely,

Robert Nash, P.E.

Enclosures

cc: Arjun Rajaratnam
Michael Geary
Doug Finan
Tom Cecich

Glaxo Wellcome Inc.
Five Moore Drive
Research Triangle Park
North Carolina 27709

Telephone
919 248 2100

NOV 1995
Received
Solid Waste
Section

Table Of Contents
Solid Waste Permit Application
Glaxo Wellcome Inc.
November 1, 1995

Carmen Johnson
Fac/Perm/Co ID# 32-06I
Date 3/20/12
Doc ID#
IN

APPROVED
DIVISION OF SOLID WASTE MANAGEMENT
DATE 2/8/96 BY

Exhibit

1. USGS Topographical Map
2. North Campus Plot Plan - Drainage
3. North Campus Plot Plan - Security
4. North Campus Plot Plan - Emergency Plan
5. Topographical Map 0748.01
6. Topographical Map 0749.03
7. Topographical Map 0739.04
8. Topographical Map 0738.02
9. North Campus Plot Plan - Site Plan
10. North Campus Plot Plan - Evacuation Routes
11. Zoning Letter From Durham County
12. Zoning Letter RTP Foundation
13. North Complex Plans and Specifications
14. Main Building Incinerator No. 42938 Plans and Specifications
15. Operations Manual Main Building Incinerator No. 42938
16. Main Building Incinerator No. 42938 Fire Control System
17. North Building Fire Control System
18. U. S. Department of Housing and Urban Developement Federal Insurance Administration Flood Plain Map
19. Deleted
20. North Campus Plot Plan - Incinerator and Hazardous Waste Storage Areas
21. Operations Manual MWI-2
22. Air Permit
23. Medical Waste Management Procedures
24. Ash Sampling Log
25. Ash Sample Composite Log
26. Durham County Landfill Disposal Permit for Incinerator Ash from Main Building Incinerator No. 42938

I. Permits for Solid Waste Management Facilities

A. Permit Application

General Facility Description

The following information describes the Glaxo Wellcome Inc. South Campus, formerly Burroughs Wellcome Co., a pharmaceutical research and development company located at 3030 Cornwallis Road, Research Triangle Park, North Carolina 27709. The Company's location consists of land parcels on both sides of Cornwallis Road. The Main Complex and South Complex are adjacent to each other on the south side of Cornwallis Road. The North Complex is located opposite the Main Complex on the north side of Cornwallis Road. Glaxo Wellcome Inc. also leases space in Research Commons II, which is located adjacent to the South Complex on geographically contiguous property.

The Main Complex contains administrative offices, research laboratories and an 800 pound per hour incinerator. The South Complex contains only administrative offices. The North Complex contains administrative and research laboratories; and the Environmental Complex consisting of three (3) Hazardous Waste Storage Areas and the Solid Waste Incineration Facility. Glaxo Wellcome Inc. leases space for administrative offices and research laboratories in Research Commons II. Exhibit #5 is a site plan for the Glaxo Wellcome Inc. , RTP facility that shows the location of buildings at the Main complex, South Complex and North Complex; and the location of the Research Commons II building (Bldg. 4401).

Solid wastes generated throughout the campus as a result of administrative, maintenance, and pharmaceutical research and development activities are collected and managed based on the activity generating the waste and the composition of the waste. Section IV provides a description of the waste types, generation locations, projected volumes and methods of waste management for transport and disposal.

Glaxo Wellcome Inc. South Campus will also be receiving wastes from other North Carolina facilities operated by Glaxo Wellcome Inc.'s ultimate parent company, Glaxo Wellcome Inc. plc. Wastes received from off site facilities will be similar in composition to the wastes generated on the Glaxo Wellcome Inc. site. The wastes from offsite facilities will be collected and shipped by a licensed waste transporter to the Glaxo Wellcome Inc. South Campus Environmental Complex Incinerator ID No. MWI-2 or the Main Building Medical Waste incinerator ID. No. 42938 for incineration with like wastes or for consolidation and transport to an approved off site disposal facility.

Other Glaxo Wellcome Inc. sites include:

FACILITY	EPA ID NUMBER	LOCATION
Glaxo Wellcome Imperial Center	NCD982117384	Morrisville, NC
Glaxo Wellcome 5 Moore Drive	NCD065655599	RTP, NC
Glaxo Wellcome Zebulon	NCD101740215	Zebulon, NC
Glaxo Wellcome Inc. Greenville	NCD047373766	Greenville, NC

Exhibit # 1, is a topographic map showing the relationship of Glaxo Wellcome Inc. South Campus (circled) to Durham County, North Carolina. The map scale is 1 inch equals 2000 feet. The contour interval of elevation is 10 feet. Exhibit # 1 shows the surrounding land use beyond the boundary of Glaxo Wellcome Inc. South Campus. The circled portion encompasses an area in excess of 1000 feet from the Glaxo Wellcome Inc. South Campus property line. There is no

residential property within 1000 feet of the Glaxo Wellcome Inc., RTP facility. The Research Triangle Park is a wooded area of approximately 5000 acres occupied by business, commercial, research and government tenants.

Exhibits # 2, # 3, and # 4 are plot plans of the North Complex showing the facility boundaries, three (3) Hazardous Waste Storage Areas, Solid Waste incinerator building and selected details. The map scale is 1 inch equals 100 feet.

Exhibits # 5, # 6, # 7 and # 8 are topographic maps with a scale of 1 inch =200 feet and a contour interval of 2 feet which address surface waters and surrounding land use at a distance of 1000 feet around the North Complex. The loading and unloading areas are shown in Exhibits # 8, # 9 and # 10.

The Main Building Incinerator is an Environmental Controls Products, Inc. model 1000 TE incinerator. The maximum operationg feed rate is 800 pounds per hour and is operated as an intermittant batch feed unit. The loads are placed into a loading chamber and advanced into the incinerator via a hydraulically powered ram. Ash is advanced on the primary hearth via succeding charges and is moved onto the secondary hearth. The ash is advanced slowly over the secondary hearth via timed ash ram extensions. The ash is finally moved onto a tertiary hearth where it is allowed to further burn off. Ash is removed from the unit manually after the interior has cooled and loaded into drums for sampling prior to disposal. 42938

The North Complex incinerator is a Consumat Systems, Inc. 2,000 pound per hour model CS-760-2 incinerator with a model ML-561 loader, model AR-4284 ash conveyor, and a 96" outer diameter quench chamber. The performance guarentees and system description are in the plans and specifications Exhibit # 13. MWI-2

(1) Site and Construction Plans (15A NCAC 13B.0202(1))

Exhibits # 9 and # 10 show access and internal roads and buildings at the Main Complex, South Complex and North Complex; and Research Commons II (Bldg. 4401). The Main Complex, South Complex, and Research Commons II (Bldg. 4401) are located on geographically contiguous property on the south side of Cornwallis Road. The North Complex is located opposite the Main Complex on the north side of Cornwallis Road.

(2) Zoning Approval (15A NCAC 13B.0202(2))

Exhibit # 11 is a letter from the zoning authority indicating that the facility meets the local zoning ordinance. In addition Exhibit # 12 is a letter from the Research Triangle Foundation Board of Design approving the incineration site plans.

(3) Site Plans and Specifications (15A NCAC 13B.0202(3))

Exhibit # 13 are copies of the plans and specifications for the MWI-2 facility.
Exhibit # 14 are copies of the plans and specifications for the Main Building incinerator No. 42938.

II. Treatment and Processing Facilities

A. Application Requirements for Treatment and Processing Facilities (15A NCAC 13B.0301)

(1) Operations Plan (15A NCAC 13B.0301)(1)

Exhibits # 9 and # 10 are site plans for the Glaxo Wellcome Inc. Facility.

Operations plans for the Main Building incinerator No. 42938 are described in Exhibit #15 and Operations plans for the MWI-2 are described in Exhibit #21 Operations and Maintenance manuals.

(2) Zoning Authority (15A NCAC 13B.0301)(2)

Exhibit # 11 is a letter from the zoning authority indicating that the facility meets the local zoning ordinance. In addition Exhibit # 12 is a letter from the Research Triangle Foundation Board of Design approving the incineration site plans.

(3) Plans and Specifications (15A NCAC 13B.0301)(3)

Exhibit # 13 are copies of the plans and specifications for the North Complex incineration facility. Exhibit # 14 are copies of the plans and specifications for the Main Building incinerator No. 42938.

B. Operational Requirements (15A NCAC 13B.0302)

(1) Permitted Waste Types (15A NCAC 13B.0302)(2)

Environmental Complex Incinerator ID No. MWI-2 is permitted to receive types 0, 1, 2, 3, 4, 5, and 6.

Main Building in the Medical Wasteis permitted to incinerate waste types I, III, IV and V.

(3) Disposition of water that has contacted Solid Waste (15A NCAC 13B.0302)(3)

Both of the Glaxo Wellcome Inc. South Campus incineration facilities are inside of buildings. The Main Building incinerator ID. No. 42938 has refrigerated storage located throughout the building and in Research Commons II for carcass storage. Animal bedding is managed in plastic bags on shelves on the covered loading dock adjacent to the facility.

All management of Solid Waste at the MWI-2 disposal facility take place inside of the building.

Water that has been delivered to the Environmental Complex waste incinerator MWI-2 as a result of accumulation in a rolloff or compactor, as well as, water that is resultant from cleaning solid waste handling areas is discharged to a sanitary sewer drain.

The Glaxo Wellcome Inc. has a Storm Water Discharge Permit No. NCG060000 Certificate of Coverage No. NCG060107. The North Complex is authorized to discharge wastewater under Industrial Waste Discharge Permit No. DC-17. The South Complex is authorized to discharge wastewater Industrial Waste Discharge Permit No. DC-10.

(4) Fire Protection Equipment (15A NCAC 13B.0302)(4)

The Main Building and Environmental Complex incinerator are equipped with a sprinkler system. Exhibit # 16 depicts the fire control equipment for the Main Building and Exhibit # 17 depicts the fire control equipment for the Environmental Complex.

(5) Vector Control Measures (15A NCAC 13B.0302)(5)

Glaxo Wellcome Inc. incineration facilities are serviced monthly by a licensed pest control company for control of vermin, insects, flies and other insects.

(6) Sanitation Maintenance and Equipment (15A NCAC 13B.0302)(6)

The Main Building Medical Waste incinerator ID. No. 42938 manages wastes contained in plastic bags, plastic bag lined fiberboard or plastic boxes. Leaks or releases of materials from containers are immediately collected, repackaged and area cleaned with an disinfecting detergent. The facility is cleaned after each operating shift.

The Environmental Complex waste handling floor is coated with epoxy flooring to prevent penetration of liquids and facilitate cleaning. The typical operations will include handling waste materials both in boxes as well as from dumpster or compactor dumping on the facility floor. A lift truck with a bucket will be used to scoop the wastes from the facility floor and load into the incinerator charging area. Waste handling floor will be cleared by the end of each operational shift and decontaminated. Water from the floor wash will be sent to a sanitary sewer.

Cleaning equipment includes: mops, buckets, dissinfectant soap, hoses and squeegies to clean the facility. Facility staff will wear appropriate personal protective equipment to perform cleaning operations.

(7) Windblown Materials (15A NCAC 13B.0302)(7)

All solid waste management activities are conducted inside of a building for protection from the elements. Wind does not contribute to dispersion of materials. The premises are routinely patrolled to collect materials that may have been released during transport of bulk containers to the facilities.

III. Disposal Sites (15A NCAC 13B.0500)

A. Siting Requirements for Disposal Sites (15A NCAC 13B.0503)

(1)(a). Exhibit # 18 is the Flood Insurance Rate Map as provided by the U.S. Department of Housing and Urban Developement Federal Insurance Administration for the RTP area. The map indicates that the Glaxo Wellcome Inc. facility is not within the 100 yr. floodplain.

(1)(b)(i)There are no designated areas of endangered or protected species on the Glaxo Wellcome Inc. South Campus site.

(ii) There are no designated critical habitat of endangered or threatened species on the Glaxo Wellcome Inc. site.

(iii)There are no known archeological or historical sites on the Glaxo Wellcome Inc. site.

(iv) The National Historic Preservation Act of 1966 is not applicable since issuance of a Solid Waste Permit will not create potential adverse effects of the liscensed activities and properties listed or eligible for listing in the National Register of Historic Places.

(2)(b) Site Access (15A NCAC 13B.0503(2)(b))

Main Building Medical Waste incinerator ID. No. 42938 access is controlled by a security monitored card access door.

Exhibit # 3 depicts the Environmental Complex security systems.

(2)(f) Buffer Zone from the disposal area to:

(i) 50-foot to the property line; and

(ii) 500-foot to private dwellings and wells;

The Glaxo Wellcome Inc. Facility is located in the Research Triangle Park (RTP), a 5,000 acre industrial park including business, research, commercial and government tennants.

(iii) 50-foot to rivers or streams

Exhibits # 9, # 10, # 2 and # 20 are topographical maps with a scale of 1 inch = 200 ft and a contour interval of 2 feet which address the surface waters and surrounding land use at a distance of 1000 feet.

IV. Application Requirements for incinerators (15A NCAC 13B.0508)

(1) Site and operations plans (15A NCAC 13B.0508(1))

Exhibits # 9 and # 10 show access and internal roads and buildings at the Main Complex, South Complex and North Complex; and Research Commons II (Bldg. 4401).

Exhibit # 21 is the Operations manual for the North Complex incinerator and Exhibit # 15 is the manual for the Main Building incinerator No. 42938.

(2) Air Quality Permit (15A NCAC 13B.0508(2))

Exhibit # 22 is a copy of the Air Permit Number 4612R9 for the Glaxo Wellcome Inc. South Campus North Complex.

(3) Zoning Authority (15A NCAC 13B.0508(3))

Exhibit # 11 is a letter from the zoning authority indicating that the facility meets the local zoning ordinance. In addition Exhibit # 12 is a letter from the Research Triangle Foundation Board of Design approving the incineration site plans.

(4) The type, quantity and source of waste for disposal. (15A NCAC 13B.0508(4))

(a) Waste Types

Code	Principal components, usual sources and typical moisture content	Estimate of Quantity Generated Onsite (lb/yr)	Estimate of Quantity Received from Offsite (lb/yr)
0	Highly combustible waste, paper, wood, cardboard cartons, including up to 10 % treated papers, plastic or rubber scraps, biowaste, medical waste, low level radioactive waste, sharps, lab trash; containing up to 10% moisture.	1,132,100	2,000,000
1	Combustible waste, paper,cartons, rags, wood, scraps, combustible floor sweepings; animal bedding, biowaste, medical waste, low level radioactive waste, containing up to 25 % moisture.	1,302,100	1,300,000
2	Rubbish and garbage; 50 % moisture. (ex. cafeteria wastes, general trash)	204,500	150,000
3	Predominantly animal and vegetable waste; 70 % moisture. (ex. cafeteria wastes)	182,400	150,000
4	Carcasses, organs, solid organic wastes from hospitals, laboratories and similar sources; 85 % moisture.	96,000	100,000
5	Gasseous and semi-liquid industrial process waste; variable moisture.	20,000	20,000
6	Solid and semi-solid by-product waste, such as rubber, plastics, wood wastes,etc., from industrial operations; variable moisture.	50,000	50,000
	Total Waste Volume (estimated)	2,987,100	3,770,000
	Total Waste Volume Available for Incineration	5,757,100	
	Maximum Incineration Capacity MWI-2	17,520,000	
	Main Building MWI ID. No. 42938	1,664,000	

Specific examples of wastes generated onsite or received from offsite are animal bedding contained with animal wastes, carcasses, tissues and organs, sharps, biohazard wastes, pharmaceutical returns, non-hazardous chemicals and low level radioactive wastes.

(b) Waste Volumes and Projected Volumes

The following is a brief description of these wastes and projected volumes available for incineration at the Glaxo Wellcome Inc. incinerators.

(b)(1) Animal Bedding

Animal bedding contaminated with animal wastes are included in category 0 or 1 wastes and are generated at approximately 625,000 pounds per year at the Glaxo Wellcome Inc. and an additional 625,000 pounds per year may be received from offsite facilities. These wastes are either accumulated in trash compactors or are bagged and boxed for shipment to the incinerator.

Trash compactors or other trash containers will be picked up from generating locations routinely based on generation rates and transported to Incinerator MWI-2 by either a contracted service or qualified site personnel. At MWI-2 wastes will be dumped onto the incineration facility floor for processing into the incinerator. No more than the volume which can be incinerated within that shift will be placed onto the facility floor at any time. Wastes that cannot be incinerated are repackaged for storage or transport to an approved disposal facility.

Animal bedding destined for incineration at the Main Building incinerator No. 42938 is packaged either in plastic bags or plastic bags inside of fiberboard or plastic boxes. Wastes received at the facility are incinerated within .

(b)(2) Carcasses

Carcasses and biological tissue samples are included in the category 4 wastes and contribute approximately 96,000 lbs per of waste per year from the Glaxo Wellcome Inc. facilities for incineration. An additional 100,000 pounds of carcasses and biological tissues may be received from offsite locations.

Carcasses and tissues will be packaged in plastic 3 mil. 165 gram dropped dart test bags or plastic bags and approved fiberboard or plastic containers. Containers of regulated medical wastes received from offsite will be packaged and labeled at the generators site according to 15A NCAC 13B.1204. Transportation of regulated medical wastes will be documented according to 15A NCAC 13B.1205. Carcasses and tissues that are not regulated medical wastes will be packaged using the same criteria for receipt at either of the Glaxo Wellcome Inc. incineration facilities for disposal.

(b)(3) Medical Waste

Medical wastes as defined in G.S. 130A-290.18 including: sharps, blood or body fluids, pathological and microbiological wastes that are known to have been exposed to or contain biological agents above Biological Safety Level III must be autoclaved or otherwise treated to remove the infectious agent prior to disposal by incineration. These wastes are packaged for transportation in plastic bags inside of fiberboard or plastic containers which in combination meet 15A NCAC 13B.1204(a)(1) requirements.

Approximately 50,000 pounds of medical wastes are generated at the Glaxo Wellcome Inc. site each year and an additional 50,000 pounds per year may be received from offsite generators. The waste is generally categorized as type 0 or 1 waste.

(b)(4) Biowaste

Biowastes are type 0 or 1 wastes consisting of paper, plastic, rubber, glass, sharps, etc. and other materials that were generated as a result of research or related activities where biological agents have been used. Any material having been exposed to or suspected to have been exposed to biological as a result of research involving biological agents is included in this general category of wastes. These wastes are packaged for transportation in plastic bags for local transport and plastic bags inside of fiberboard or plastic containers which in combination meet 15A NCAC 13B.1204(a)(1) requirements.

Approximately 10,000 pounds of biowastes are generated on the Glaxo Wellcome Inc. site each year and an additional 150,000 pounds of biowastes may be received from offsite generators.

(b)(5) Pharmaceutical Returns and Rejects

Pharmaceutical rejects and returns consist of non-hazardous pharmaceutical products, paper, cardboard and plastic packaging and excipients used in pharmaceutical manufacturing at Glaxo Wellcome Inc. facilities. Rejects consist of pharmaceutical products, excipients and contaminated paper, cardboard and plastic materials resulting from products not meeting QA/QA criteria, manufacturing testing or from out of date stocks. Pharmaceutical returns are Glaxo Wellcome Inc. products and packaging materials returned to the facility as a result of clinical trials, damaged goods or out of date shelf stocks.

(b)(7) Low Level Radioactive Wastes

Low level radioactive wastes are type 0 and 1 wastes consisting primarily of paper, plastic, cardboard, gloves, bench covers and protective garments such as tyvek. The approximate volume is 20,000 pounds per year generated from the Glaxo Wellcome Inc. and an additional 20,000 pounds per year received from offsite facilities.

(b)(6) Trash

Types 0 through 6 generated from general site operations may consist of the following:

wooden pallets	lab clothing/gloves	computer paper
cardboard	clear/green glass	tin cans
HDPE containers	Styrofoam	borosilicate glass
milk cartons	animal bedding	food waste
wood	wet towels	broken glass/plastic
lab wrappers/plastic	feed bags	shrink wrap
glass pipettes	wire	fiberglass filters
paper - food grade	china/silverware	aluminum foil
polystyrene containers	plastic strapping	contaminate mixed paper

The main focus of Glaxo Wellcome Inc. will be to take advantage of recycling, reuse or reduction opportunities for the above wastes, however, in the event that these wastes cannot be recycled or reused Glaxo Wellcome Inc. will use onsite management via incineration.

V. Operational Requirements for Incinerators (15A NCAC 13B.0509)

(1) Designed and Operated to prevent nuisance or potential health hazard (15A NCAC 13B.0509(1))

Exhibit # 21 contains the design and operations specifications for the MWI-2 incinerator and Exhibit # 15 contains the design and operations specifications for the Main Building incinerator No. 42938. The operations and maintenance procedures are also included.

(2) Minimizing interference with other area activities (15A NCAC 13B.0509(2))

As noted in the land use exhibits # 5, # 6, # 7 and # 8, the facilities are located within the Glaxo Wellcome Inc. campus and do not contribute to interference with activities onsite or offsite.

(3) Storage and Dumping Areas (15A NCAC 13B.0509(3))

The Main Building incinerator No. 42938 area has storage freezers throughout the facilities and in Research Commons II for carcasses. Animal bedding is accumulated in plastic bags on trays on racks and stored on the loading dock adjacent to the incinerator.

Waste received at the Environmental Complex incinerator MWI-2 will be placed on the dumping floor of the facility. Generally the wastes will be incinerated within the operating shift or placed into the refrigerated storage. As noted on the facility diagrams there is an area provided for the storage of Low Level Radioactive wastes during decay. Ash generated from incineration will be stored in designated areas on the lower level in rolloffs or dump bins.

(4) Vector Control (15A NCAC 13B.0509(4))

Glaxo Wellcome Inc. incineration facilities are serviced monthly by a licensed pest control company for control of vermin, insects, flies and other insects.

(5) Sanitation Maintenance and Equipment (15A NCAC 13B.0509(5))

See (15A NCAC 13B.0302)(6)

(6) Disposal of incinerator plant residue. (15A NCAC 13B.0509(6))

Ash and residues generated from operations at the facility will be collected into rolloff containers or compactors for disposal at an approved sanitary landfill. Containers will be removed by a contract waste hauler when filled or during extended interruptions in operations.

(7) Air Quality Permit (15A NCAC 13B.0509(7))

Exhibit # 22 is a copy of the Air Permit Number 4612R9 for the Glaxo Wellcome Inc. South Campus.

(8) Waste Receiving (15A NCAC 13B.0509(8))

Waste management technicians and operators assure that only those solid wastes permitted for receipt at the facilities will be incinerated. Visual inspections of the waste on the dumping floor will provide adequate opportunity to identify and exclude non-permitted wastes. Waste received in containers or from offsite is labeled to indicate the contents.

(9) Disposition of water that has contacted Solid Waste (15A NCAC 13B.0509(9))

Both of the Glaxo Wellcome Inc. incineration facilities are inside of buildings and all management of Solid Waste at the disposal facilities take place inside of buildings.

Water that has been delivered to the Environmental Complex waste incinerator as a result of accumulation in a rolloff or compactor, as well as, water that is resultant from cleaning solid waste handling areas is discharged to a sanitary sewer drain.

The Glaxo Wellcome Inc. has a Storm Water Discharge Permit No. NCG060000 Certificate of Coverage No. NCG060107. The Environmental Complex is authorized to discharge wastewater under Industrial Waste Discharge Permit No. DC-17. The Main

Building Complex is authorized to discharge wastewater Industrial Waste Discharge Permit No. DC-10.

VI. Medical Waste Management

Exhibit # 23 describes the practices and procedures for management of Medical Waste at the Glaxo Wellcome Inc. facility and at offsite generators that may be transporting wastes to the incineration facilities.

A. Operational Req/Regulated Medical Waste Treatment Facilities (15A NCAC 13B.1207) Sections (3)(f) through (k) - Ash Sampling Plan

Medical Waste Incinerator ID No. 42938

The Medical Waste Incinerator ID No. 42938 is located in the Main Building on the South Campus of the Glaxo Wellcome Inc. campus and has been in service since 1981. The incinerator is a Environmental Control Products, Inc. model 1000T Special with a SR-28H feeder. The incinerator is a natural gas/No. 2 fuel oil multiple chamber incinerator with a permitted feed rate of 800 pounds per hour of types I, III, IV and V waste.

Ash from incinerator No.42938 is currently being disposed of at the Durham landfill under Permit #32-01 Exhibit # 26 issued by the Department of Environment, Health, and Natural Resources. North Carolina Department of Environment, Health and Natural Resources has indicated on December 7, 1994 that the current waste determination in accordance with 15A NCAC 13B.0103 (d) remains in effect until new rules and/or regulations prohibit this practice; or, if the process generating the waste changes; or , if the composition of the waste changes significantly.

Medical Waste Incineration System MWI-2

The MWI-2 incineration unit consists of a Consumat 2,000 pound per hour multiple chambered medical waste incinerator permitted for types 0, I, II, III, IV, V, and IV wastes. The incinerator is attached to an Interel baghouse filter Permit Id. No. BF-1 for removal of particulates and reduction of acid gasses.

Ash generated from the incineration processes will consist of bottom ash generated from the ash retrieval system and offgas treatment residues and fly ash. Bottom ash is removed from the incinerator using a wet retrieval ash conveyor . Bottom ash is passed from the secondary hearth of the primary chamber into a water filled receiving pit for cooling. The ash is removed from the pit by a chain drag which drags portions of the ash up a ramp for dewatering prior to addition to the ash containers. Fly ash and treatment residues are generated as a result of offgas treatment with lime dust and are retrieved in the baghouse. A screw conveyor moves fly ash and treatment residues up a ramp to the ash disposal containers where they are commingled with the bottom ash. Fly ash and treatment residues are wetted on mixing so that the moisture residual in the bottom ash will prevent the formation of dusts by the fly ash and offgas treatment residues.

Ash and treatment residues will be collected in small containers (1-5 yards) which will be combined into larger dumpsters (10 to 20 yards) allowing the ash to further dewater if necessary. Filled ash dumpsters will be sampled prior to removal form the site. An approved waste hauling company will be contracted to transport the ash to an approved landfill for disposal.

As required by 15A NCAC 13B .1207 (3) sections (f) through (k) the following schedule for ash testing will be initiated following the introduction of solid wastes into the unit for incineration. All samples will be taken from the ash collection containers.

Startup through first three months of operation:

Operating Mode	Sample Volume	Sample Period	Total Sample
24 hour continuous operation period	2.2 kg each sample	one sample each 8 hours of operation	Composite daily to a 2.2 kg representative sample. Composite daily samples to a weekly sample.
or; for each day of intermittent operations.	2.2 kg	one per 24 hours	Composite daily samples to a representative weekly sample.

Daily samples will be composited in a closed container weekly and thoroughly mixed and reduced to a representative sample. Weekly samples will be composited in a closed container and reduced into a monthly sample. The monthly composite sample will be submitted for analysis according to 15A NCAC 13B .0103(d) "Procedure and Criteria For Waste Determination" prior to shipment to an approved landfill.

Remainder of the first year:

Monthly composited samples will be composited into a quarterly sample and analyzed at the end of the quarter. Analysis shall be according to 15A NCAC 13B .0103(d) "Procedure and Criteria For Waste Determination".

After the first year:

Representative samples will be analyzed at least twice each year according to 15A NCAC 13B .0103(d) "Procedure and Criteria For Waste Determination".

A log documenting the ash sampling including the date and time each sample was taken; the date , time and identification number each composite sample; and the results of analysis, including laboratory identification. Exhibit # 24 depict the sample log and Exhibit # 25 represents the composite log that will be used for the facilities.

VII. Operator Training Program

All Glaxo Wellcome Inc. incinerator operators are placed into a training program that includes the instrumentation, equipment operation and practices based on SOP's developed by operators and management using the manufacturers best practices for operations and maintenance of the equipment. All operators are trained to understand the basic principles and operations of each of the systems that contribute to the incinerator operations. The operators must learn the operations of the systems from either a manufacturers representative or an experienced operator. The job description requires that the operator have completed a high school or more education level.

The training program consists of the following components (based on the unit):

Incineration technology and principles
Incinerator Unit specific operations procedures
Waste Feed System
Off-gas control systems and principles - Interel
Continuous Monitoring Devices and systems
Permit and operating limits
Lime Delivery Systems and operations
Ash Handling System and Procedure
Forklift Operator Training

VIII. Contingency Plan

The Glaxo Wellcome Inc. South Campus incineration facilities were constructed to provide support to Research and Development, maintenance, site services and other Solid Waste generators in the onsite management of Solid Wastes. These facilities, in conjunction with other methods of waste management like recycling and reduction, were designed to provide Glaxo Wellcome Inc. with the opportunity to reduce the volume and hazards of wastes that would typically be managed in a landfill.

Current methods of waste management include recycling paper, styrofoam, cardboard, tin, and, aluminum. Other candidate waste streams, such as food wastes, are under evaluation for recycling. Those wastes that are not candidates for a recycling program, including, medical wastes, bedding , animal carcasses, pharmaceutical product returns or rejects are treated onsite for waste volume and hazard reduction.

An approval for disposal at the Durham County Landfill (Permit #32-01) is currently in place for the ash generated by the Main Building Incinerator No.42938. An alternate facility approval for disposal of ash is being sought at the Waste Management Piedmont Landfill & Recycling Center in Kernersville, NC and is expected to be in place within the month. Ash generated by MWI-2 will be profiled for disposal at both landfills as part of the initial ash sampling procedure.

Glaxo Wellcome Inc. currently has an agreement with the BFI Inc. facility at Haw River for the incineration of pharmaceutical returns and biomedical wastes. In the event that the wastes generated onsite cannot be managed in any of the Glaxo Wellcome Inc. incineration facilities and exceeds the storage capacity at the facilities, management will contact BFI to implement the contract for disposal.

In the event that a load of trash or animal bedding cannot be delivered to a Glaxo Wellcome Inc. facility for incineration, the contract hauling company will be directed by management to deliver the load to the local landfill.

Management capable of implementing the Contingency plan for disposal includes the Safety and Environmental Affairs managers and Environmental Affairs managers.

IX. Medical Waste Management Plan

Scope

All personnel involved in the packaging, labeling, loading and preparations of shipping papers of Regulated Medical Waste for interfacility transport are required to adhere to the following procedures.

Procedure

Regulated Medical Wastes consist of paper, plastic, glass, cultures, bodily fluids, blood, media, sharpes, animal wastes, carcasses and laboratory equipment contaminated with biological agents (≥BSL 3) or pathogens. These wastes are generated in Glaxo Wellcome Inc. laboratories and animal management facilities and are managed for disposal by the Environmental Affairs group. Materials exposed to BSL 3 or above are treated to remove or reduce the hazard prior to removal from the lab for ultimate disposal by incineration in accordance with 15A NCAC 13B.1207(3).

Packaging

The Environmental Affairs Group provides generator with boxes marked with the Universal Biohazard Symbol and the words "Biohazardous Waste". In addition, each box is accompanied by a 3 mil. polypropylene bag meeting 15A NCAC 13B.1204(a)(1) and marked with the Biohazard symbol and the words "Infectious Waste". These materials constitute the minimum packaging to be used by the laboratory for packaging Regulated Medical Wastes.

Boxes must be securely taped on the bottom prior to loading the box with wastes. Inner plastic liner must be tied or taped securely prior to removal from the lab. Individual sharpes containers may be removed as waste if the top is secured and the Universal Biohazard Symbol and the words "Biohazard" are present on the container.

Labeling

Boxes for interfacility transport are labeled with the generating facility address, phone number and contact name; transporter address, phone number and contact name; and, receiving facility address, phone number and contact name. The box is dated prior to shipment.

Loading

Accumulated Regulated Medical Waste is inspected for signs of leakage or spillage prior to loading for transport. Boxes are not stacked greater than three high. Boxes are secured using straps or retainers to prevent shifting during transport. Shipping papers are prepared indicating the appropriate DOT shipping name, generator name, receiving facility name, transporter and the piece count loaded.

Unloading

Containers are inspected for signs of leakage or spillage during transport. A piece count is taken and the shipping paper is reconciled and signed. Copies of the shipping paper are maintained at the receiving facility and one copy is returned to the generator. Copies are retained for three years.

Spill Response

In the event of leakage or spillage involving Regulated Medical Waste or residues during storage or transport, spill remediation must be completed to treat and remove the spilled/leaked materials. From a distance observe the extent of the spill and the nature of the materials involved. Spray a mist of 10% Clorox to cover the spilled materials from the outside of the spill toward the center. Allow 2 minutes for aerosols to settle before attempting to collect the waste. Don latex gloves under neoprene or butyl gloves and a faceshield or safety glasses. Use a broom and dust pan to collect spilled solids and a mop to collect spilled liquids. Package solids in another Biohazard Waste box. Mop the area with a weak solution of Clorox and dispose or liquids to the sanitary sewer. For liquids spilled during transport, saturate the area with Clorox spray and allow 2 minutes for aerosols to settle. Absorb the free liquids and cover the remaining wetted area with Clorox.

Exhibit #11

Durham City County Planning Department

101 City Hall Plaza
Durham, NC 27701
(919) 560-4137
Fax 560-4641

August 5, 1993

Mr. Chris Kemp
Air Quality Section
NC DEHNR
PO Box 29535
Raleigh, North Carolina 27626-0535

Subject: Ordinance Consistency Determination:
Burroughs Wellcome Co., Research Triangle Park Facility
Permit Application for Revision to Air Permit No. 4612R7

Dear Mr. Kemp:

The revisions described in the subject application and located within the Burroughs Wellcome facilities at the Research Triangle Park are consistent with zoning and subdivision requirements of the County of Durham.

Please advise if additional information is needed.

Sincerely,

William G. Roberts Jr.

William G. Roberts, Jr., AICP
Principal Planner, Design Review

cc: Mr. Robert Nash, P.E., Section Head Environmental Operations
Burroughs Wellcome Co.
3030 Cornwallis Road
Research Triangle Park, NC 27709

Exhibit #12

Research Triangle Foundation of North Carolina

2 Hanes Drive
Post Office Box 12255
Research Triangle Park, North Carolina 27709
Telephone: (919) 549-8181 FAX: (919) 549-8246

Elizabeth H. Rooks, Director of Physical Development

September 17, 1993

Mr. John Englehardt
Burroughs Wellcome Company
Post Office Box 13526
Research Triangle Park, N. C. 27709

Dear John:

This is to confirm that, at its meeting on September 15, the Research Triangle Park Board of Design approved the plans for the incinerator at Burroughs Wellcome, North Campus. In approving these plans, the Board asked that attention be given to screening the facility from MCNC to the west. This screening could be accomplished through berming, landscaping or a combination thereof. The Board made this request because it felt that there would not be sufficient existing vegetation remaining after grading to screen the facility from the Supercomputing Center at MCNC.

Please feel free to call me if you have any questions or if I may be of any further assistance.

Sincerely,

Elizabeth H. Rooks

EHR:bh

RECEIVED
SEP 22 1993
CORPORATE ENGINEERING

U.S.A. 319

MEMORANDUM

BURROUGHS WELLCOME CO.
Corporate Engineering Administration

FROM: John Englehardt JE

TO: R. Tolmie
CC: W. Livingston
R. Nash

DATE: September 24, 1993

SUBJECT: RTP Incinerator

Attached is the approval from the RTP Foundation Board of Design for the Incinerator Project with the stipulation that we provide added screening.

The MCNC Site Manager called after the Board of Design meeting, which he attended, to add his concerns regarding screening and questioned the possible use of the facility as a hazardous waste incinerator. I told him we were not permitted for such use.

DRAWING LIST

Exhibit #13

DRAWING LIST P-5185

DRAWING NO.	REVISION	TITLE
D-04C-0128 SHT 1	K	CS-760-2 w/ Interel Scrubber Burroughs Wellcome Co Research Triangle Park, NC
D-04C-0128 SHT 2	L	CS-760-2 w/ Interel Scrubber Burroughs Wellcome Co Research Triangle Park, NC
D-04C-0128 SHT 3	E	CS-760-2 w/ Interel Scrubber Burroughs Wellcome Co Research Triangle Park, NC
D-34J-0026	E	Burner Fuel / Air Schematic
C-34J-0027	B	Fuel Train Assembly, Natural Gas, IRI-3"
C-34R-0122	A	Combustion Air Schematic
D-34F-0186	A	Hydraulic Schematic
D-34B-0198		Spray Water Schematic
D-34B-0200	B	Cooling Loop Schematic
D-34B-0199	A	Cooling Skid Assembly
B-34B-0222		Cooling Skid Modifications Temperature Switch Addition
D-34C-0091		Air & Water Spray Schematic Flue Gas Quench System
D-034-0042		Air / Water Skid Assembly Dry Scrubber System
C-034-0044		Pressure Transmitter Retrofit Air/Water Skid
B-34C-0093		Control Piping Assembly Bypass Valve Remote Assembly
D-34C-0094		Pneumatic Piping, Bypass Valve Cylinder

DRAWING LIST P-5185

DRAWING NO.	REVISION	TITLE
D-50-4443 SHT 20	A	Schematic Analog
D-50-4443 SHT 21	B	Schematic Analog
D-50-4444		Schematic Cooling Water
D-011-0072 SHT 1	A	Loading Bridge Assembly
D-010-0101	B	ML-561 Loader Assembly
D-15X-0001		Mechanical Assembly CS-760 L/C
C-48G-0021		9' Screw Conveyor Field Assembly
D-031-0466		Upper Chamber Field Assembly, CS-760-2
D-31X-0001	B	Upper Chamber Shell #1 Assembly CS-760
D-31X-0002	A	Upper Chamber Shell #2 Assembly CS-760
D-020-0254	A	Ash Ejector Assembly, AR4284, CS-760
D-022-0119	A	AC-48 Conveyor Assembly
D-022A-0173		AC-48 Conveyor Head Assembly
D-047-0025	C	Quench Chamber Assembly
D-028-0186	B	I.D. Fan Duct Assembly
D-026-0219		Hot Gas Duct Assembly Q.C. to Baghouse
C-025-0449		Bypass Stack Assembly 48"
D-24M-0027 SHT 1		L/C To U/C Connecting Duct

DRAWING LIST P-5185

DRAWING NO.	REVISION	TITLE
D-32-0005		48" Stack Valve Assembly
D-043-0380		Structural Assembly
D-044-0383 SHT 1	B	Loader Support Structure Assembly
D-44A-0049	A	Lower Chamber Access Platform Assembly
D-043-0379 SHT 1		Stairs Assembly
D-44A-0048		Platform Assembly AC-48 Sump Tank
D-44D-0012		Control Platform Assembly
D-044-0384 SHT 1	A	Upper Chamber Platform Assembly
D-44B-0060		Platform Bracing Upper Chamber Platform
D-47A-0005 SHT 1	A	Access Platform Assembly

DRAWING LIST P-5185

DRAWING NO.	REVISION	TITLE
D-20C-0029		Ash Sump Air System
D-50-4241 SHT 1	G	Conduit Sizes With Interconnect Conduits
D-50-4241 SHT 2	H	Conduit Sizes With Interconnect Conduits
D-50-4443 SHT 1		Schematic Power Requirements
D-50-4443 SHT 2	A	Schematic Scrubber Power Requirements
D-50-4443 SHT 3	A	Schematic Scrubber Power Requirements
D-50-4443 SHT 4	A	Schematic Power Requirements
D-50-4443 SHT 5		Schematic Control Power
D-50-4443 SHT 6	A	Schematic Scrubber Control
D-50-4443 SHT 7	A	Schematic Scrubber Heater Control
D-50-4443 SHT 8		Schematic Scrubber Logic Motors
D-50-4443 SHT 9		Schematic Scrubber Logic Heaters
D-50-4443 SHT 10		Schematic Incinerator Burner Control
D-50-4443 SHT 11	A	Schematic Incinerator Burner Control
D-50-4443 SHT 12	C	Schematic Incinerator-Inputs
D-50-4443 SHT 13		Schematic Incinerator-Outputs
D-50-4443 SHT 14		Schematic Incinerator-Outputs
D-50-4443 SHT 15	C	Schematic Isolated Inputs
D-50-4443 SHT 16	D	Schematic Scrubber Inputs
D-50-4443 SHT 17	B	Schematic Scrubber Outputs
D-50-4443 SHT 18	A	Schematic Analog I/O
D-50-4443 SHT 19		Schematic Analog

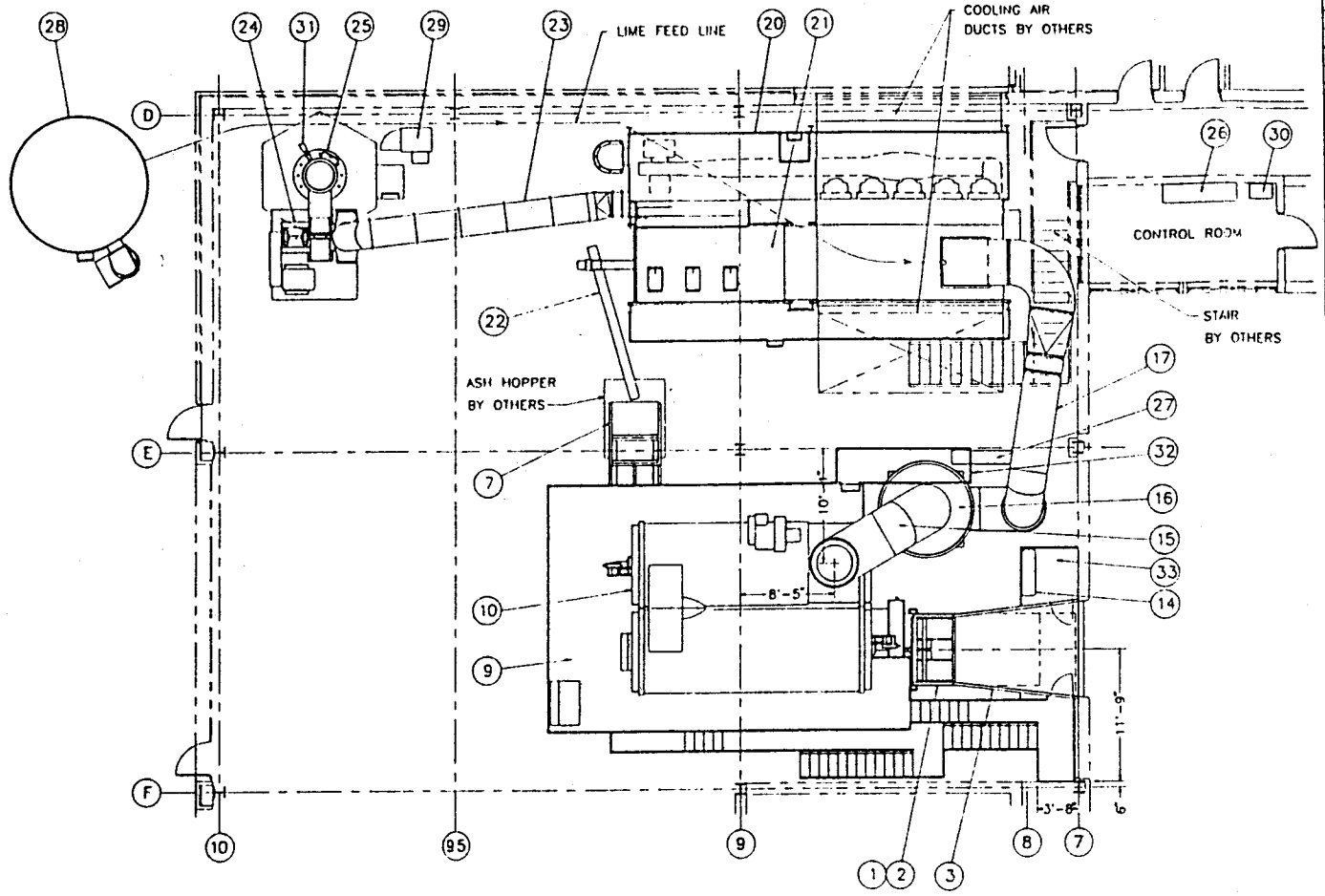

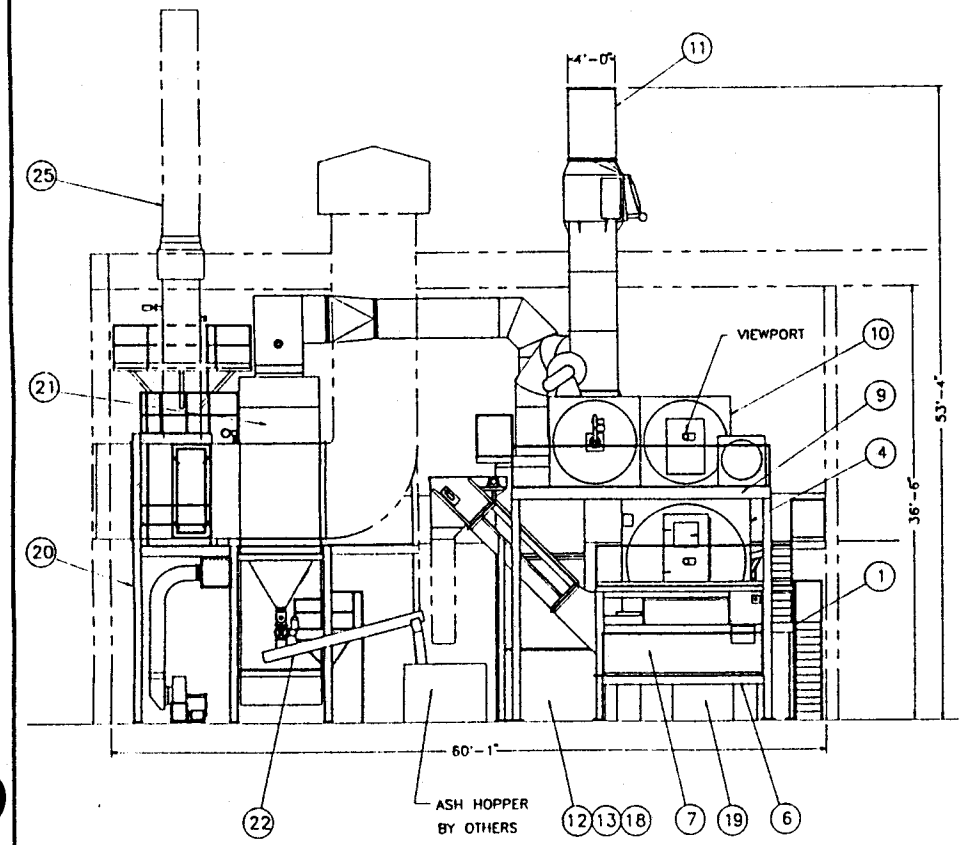

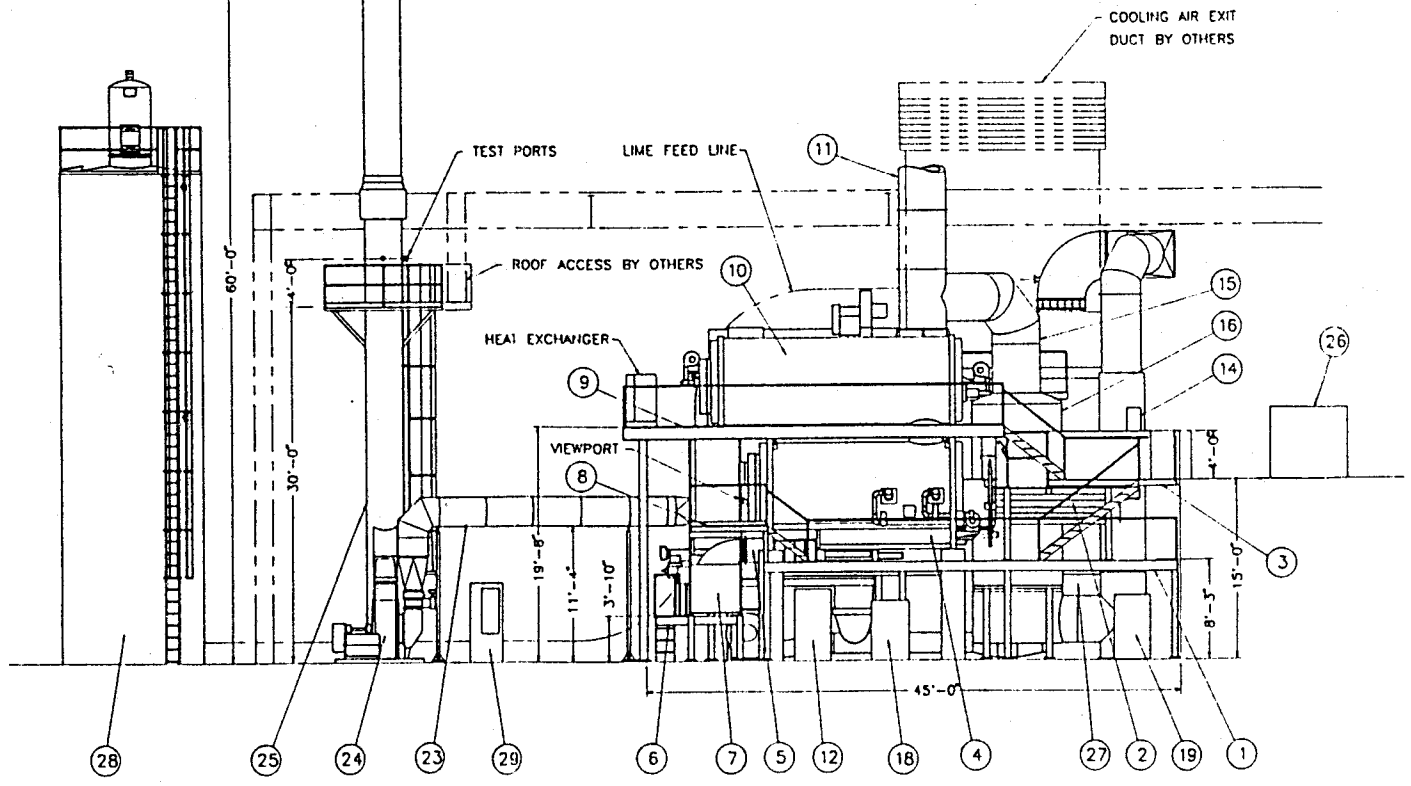

PARTS LIST

QTY	BM	PART NUMBER	DESCRIPTION	CUT FROM	
1	1	D-044-0383	LOADER SUPPORT STRUCTURE		
1	2	D-010-0101	ML-561 LOADER ASSEMBLY		
1	3	D-011-0072	LOADING BRIDGE ASSEMBLY		
1	4	D-015-0490	CS-760 LOWER CHAMBER ASSEMBLY		
1	5	D-020-0254	AR-4284 ASH REMOVER		
1	6	C-22E-0117	ASH CONVEYOR SUPPORT STRUCTURE		
1	7	D-022-0119	AC-48 ASH CONVEYOR ASSEMBLY		
1	8	D-44A-0049	LOWER CHAMBER ACCESS PLATFORM		
1	9	D-044-0384	UPPER CHAMBER PLATFORM		
1	10	D-031-0466	DUAL UPPER CHAMBER ASSEMBLY		
1	11	C-025-0449	BYPASS STACK		
1	12	D-34B-0200	INCINERATOR COOLING SYSTEM		
1	13	D-20C-0029	ASH SUMP AIR SYSTEM		
REF	14		INCINERATOR ELECTRICAL POWER SYSTEM		
REF	15	D-047-0025	HOT GAS DUCT		
1	16	D-047-0025	QUENCH CHAMBER ASSEMBLY		
1	17	D-026-0219	QUENCHED GAS DUCT		
1	18	D-034-0042	QUENCH AIR/WATER SKID		
1	19	D-34C-0091	COMPRESSED AIR SYSTEM		
REF	20		SCRUBBER SUPPORT STRUCTURE		
1	21		INTEREL IDAP-II SCRUBBER SYSTEM		
1	22	C-48G-0021	FLYASH TRANSFER SCREW CONVEYOR		
1	23	D-028-0186	CLEAN GAS DUCT ASSEMBLY		
REF	24		I.D. FAN ASSEMBLY		
REF	25		STACK WITH PLATFORM AND LADDER (BY APC)		
1	26	D-50-4443	SYSTEM CONTROL PANEL		
REF	27		SCRUBBER ELECTRICAL POWER SYSTEM		
REF	28		LIME STORAGE AND DELIVERY SYSTEM (BY APC)		
REF	29		CEM INSTRUMENT CABINET (BY APC)		
REF	30		CEM PANEL (BY APC)		
REF	31		CEM PROBE (BY APC)		
REF	32	D-47A-0005	QUENCH NOZZLE ACCESS PLATFORM		
1	33	D-44D-0012	STARTER PANEL PLAITFORM		
1	34	M04C0128	MISC. HARDWARE (NOT SHOWN)		

REV	REVISION	DATE	DR	CHK	APP	APP
G	ITEM 31 ADDED, ITEM 22 ELEVATED, ASH HOPPER ROTATED	9/13/93	JKF			
F	BUILDING DETAILS, STACK, STAIRS AND MISC ADJUSTMENTS	9/7/93	JKF			
E	REDRAWN	5/14/93	JKF			

REV	REVISION	DATE	DR	CHK	APP	APP
J	RAISE ITEM17 8", MOVE ITEM9 LEGS, ADD ITEM3 DOOR, MISC DETAILS	7/22/94	JKF			
I	COMBINE INCIN & SCRUB CONTROL PANELS, SHOW LADDER,VIEWPORTS	3/25/94	GAF			
H	STACK PLATFORM ROTATED	10/20/93	JKF			

REV	REVISION	DATE	DR	CHK	APP	APP
M						
L						
K	ADD DWG # TO P/L, ADD #13 (WAS UNUSED), DWG # WAS 01-0691	12-20-94	BLJ			

THIS DRAWING IS THE PROPERTY OF CONSUMAT SYSTEMS, INC AND IS TO BE USED ONLY FOR PROVIDING ITEMS ON ORDER FOR CONSUMAT SYSTEMS, INC. SUBJECT TO RETURN UPON DEMAND AND IS NOT TO BE PRINTED, PHOTOGRAPHED, COPIED, REPRODUCED, LOANED OR USED IN ANY WAY WITHOUT WRITTEN PERMISSION OF CONSUMAT SYSTEMS, INC

DR JKF	DATE 3/17/93	
CHK	DATE	
APP	DATE	
APP	DATE	
ARCHIVE	PROJ NO. P5185	

CONSUMAT SYSTEMS, INC.
RICHMOND, VA. U.S.A.

TITLE
CS-760-2 W/INTEREL SCRUBBER
BURROUGHS WELLCOME CO.
RESEARCH TRIANGLE PARK, NC

NEXT HIGHER ASSY	SCALE 1/8" = 1'	DWG. NO. D-04C-0128
DO NOT SCALE	REFERENCE	SHEET 1 OF 3
		REV. K

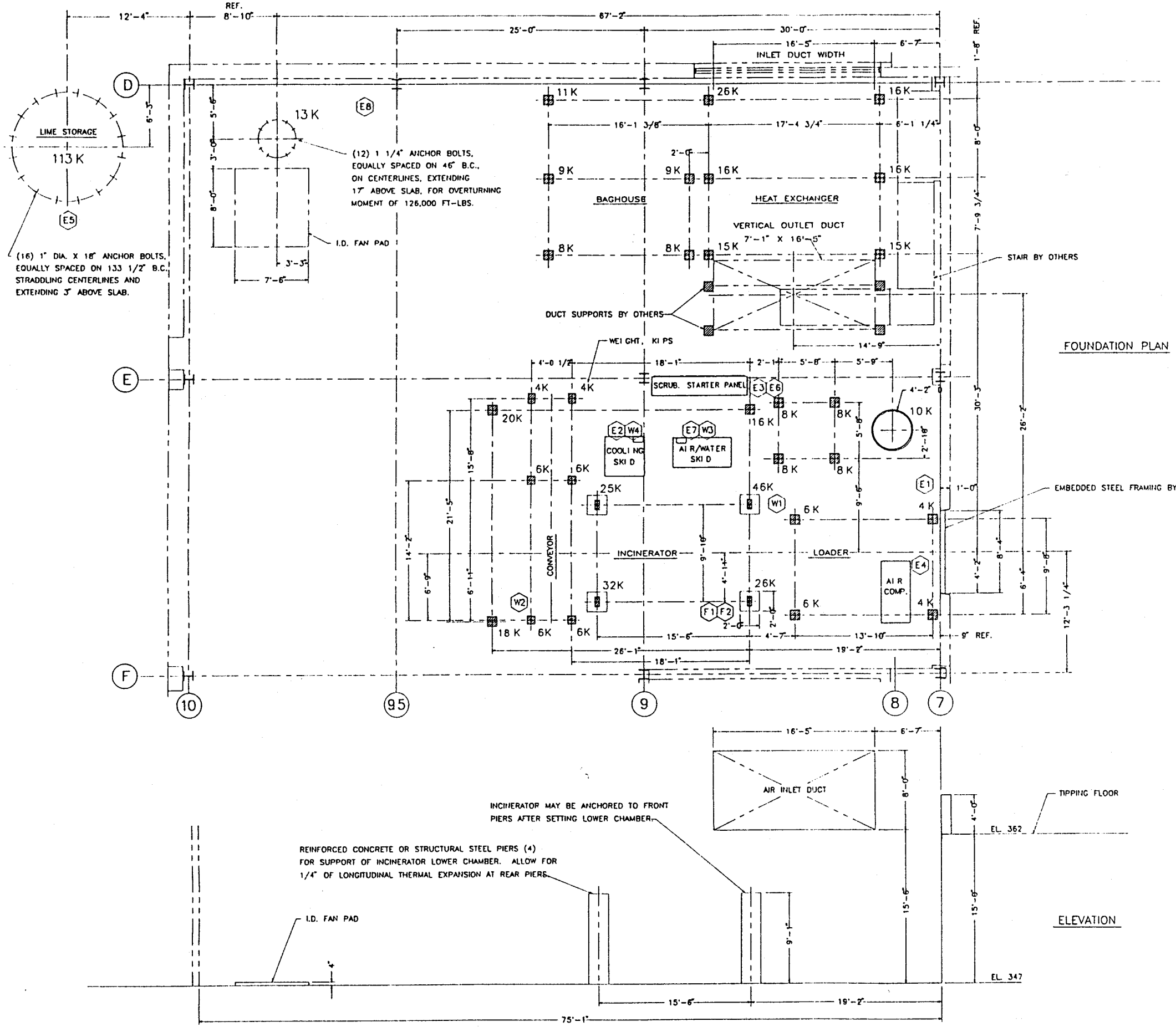

PARTS LIST				
QTY	BM	PART NUMBER	DESCRIPTION	CUT FROM

UTILITY SCHEDULE

UTILITY	MARK	EQUIPMENT	ELEV. FT.	CAPACITY
ELEC. POWER				
460V, 3-PH	E1	INCINERATOR	22	130 AMP
	E2	COOLING SKID	5	15 AMP
	E3	SCRUBBER	7	500 AMP
	E4	COMPRESSOR	4	100 AMP
	E5	LIME FEED	6	25 AMP
	E6	SCRUBBER	7	50 AMP
230V, 1-PH	E7	AIR/WATER SKID	1	10 AMP
	E8	CEM PANEL	7	40 AMP
NATURAL GAS	F1	INCINERATOR	11	12,500 CFH @ 18" WC; 3" P
NO. 2 OIL	F2	INCINERATOR	11	86 GPH @ 10 PSI
WATER	W1	INCINERATOR	11	10 GPM; 3/4" P
	W2	ASH QUENCH	7	20 GPM; 1" P
	W3	AIR/WATER SKID	1	10 GPM; 3/4" P
	W4	COOLING SKID	1	10 GPM; 3/4" P
COMBUSTION AIR MAKEUP		INCINERATOR		6,000 CFM APPROX.*

* DOES NOT INCLUDE VENTILATION AIR REQUIRED CARRY OFF ESTIMATED HEAT LOAD OF 1.5 MILLION BTU/HR.

PIT, BEARING POINTS AND WEIGHTS

NOTES:

1. MAJOR FOUNDATION LOADS, INDICATED IN KIPS, INCLUDE ONLY THE WEIGHT OF THE EQUIPMENT. ADDITIONAL DYNAMIC LOADS DUE TO WIND AND SEISMIC FACTORS SHOULD BE CONSIDERED ACCORDING TO LOCAL REQUIREMENTS.
2. ELEVATIONS ALLOW FOR 1" GROUT UNDER ALL EQUIPMENT PADS RELATIVE TO HYPOTHETICAL FLAT FLOOR. SHIM PLATES ARE USED AT THE TOP OF INCINERATOR PIERS.
3. EQUIPMENT FLOOR AND PIT SHOULD BE SLOPED TO DRAINS TO FACILITATE WASHDOWN.
4. ANCHOR BOLTS SHOULD BE INSTALLED AFTER EQUIPMENT PLACEMENT (EXCEPT STACK). DETAILS WILL BE PROVIDED ON COMPONENT INSTALLATION DRAWINGS.

THIS DRAWING IS THE PROPERTY OF CONSUMAT SYSTEMS, INC. AND IS TO BE USED ONLY FOR PROVIDING ITEMS ON ORDER FOR CONSUMAT SYSTEMS, INC. SUBJECT TO RETURN UPON DEMAND. AND IS NOT TO BE PRINTED, PHOTOGRAPHED, COPIED, REPRODUCED, LOANED OR USED IN ANY WAY WITHOUT WRITTEN PERMISSION OF CONSUMAT SYSTEMS, INC.

DR	DATE
JKF	5/14/93
CHK	DATE
APP	DATE
APP	DATE
ARCHIVE	PROJ NO. P5185

CONSUMAT SYSTEMS, INC.
RICHMOND, VA. U.S.A.

TITLE
CS-760-2 W/INTEREL SCRUBBER
BURROUGHS WELLCOME CO.
RESEARCH TRIANGLE PARK, NC

NEXT HIGHER ASSY	SCALE	DWG. NO.	REV.
DO NOT SCALE	3/16" = 1'	D-04C-0128	L
	REFERENCE	SHEET 2 OF 3	

NOTE: REVISIONS PERTAIN TO THIS SHEET ONLY.

REV	REVISION	DATE	DR	CHK	APP	APP
H	BUILDING DETAILS, SCRUBBER SYSTEM WEIGHTS AND MISC. ADJUSTMENTS	9/7/93	JKF			
G	UTILITY CONNECTIONS E7 AND E8 ADDED	6/23/93	JKF			
F	UTILITY CONNECTION ELEVATIONS; MAKE-UP AIR; ITEM 17 BEARING PT.	5/30/93	JKF			
K	E6 REDUCED TO 50A.; MOVED E3, E6, F1 & F2	12/7/94	JKF			
J	8' WAS 7' (ID FAN PAD)	11/8/94	BLJ			
I	I.D. FAN PAD; ASH CONVEYOR PADS; INCINERATOR WEIGHTS	6/30/94	JKF			
L	DWG # WAS 01-0691	12-20-94	BLJ			

PARTS LIST			
QTY	BM	PART NUMBER	DESCRIPTION	CUT FROM

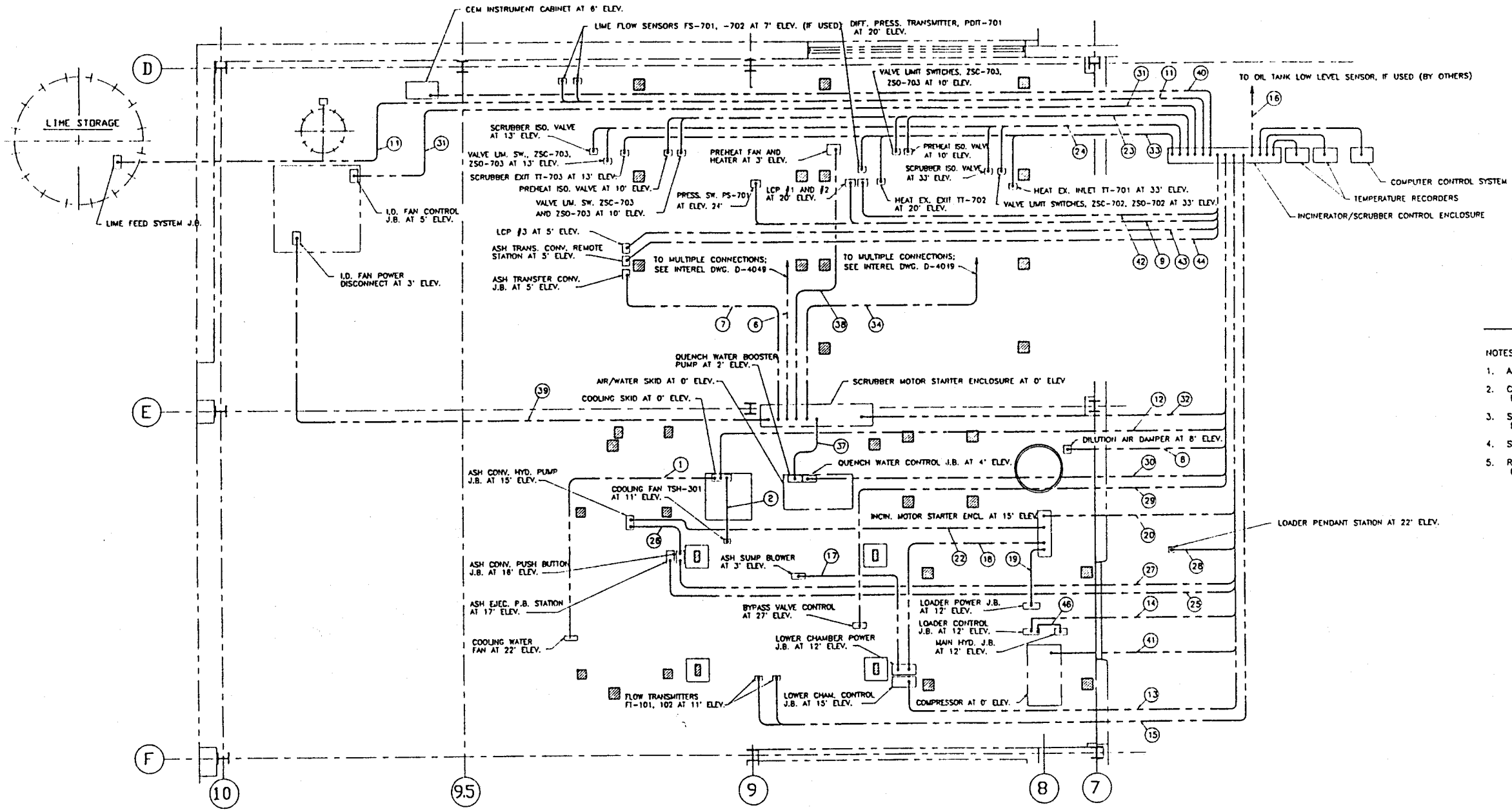

INTERCONNECTING CONDUIT RUNS

NOTES:

1. APPROXIMATE TERMINATION LOCATIONS AND ELEVATIONS ARE INDICATED.
2. CONDUIT ROUTING IS SHOWN SCHEMATICALLY. ACTUAL ROUTING IS TO BE DETERMINED BY OTHERS.
3. SEE CSI DRAWING D-01-0691 SHT. 2 FOR APPROXIMATE LOCATIONS OF ELECTRICAL POWER AND UTILITIES CONNECTION POINTS.
4. SEE CSI DRAWING D-50-4241 FOR ADDITIONAL CONDUIT DETAILS.
5. REFER TO INTEREL DRAWING D-4049 FOR CONNECTION LOCATION DETAILS ON SCRUBBER SYSTEM.

REV	REVISION	DATE	DR	CHK	APP	APP
B	RENUMBERED MOST CONDUITS; ADDED CONDUITS 7, 12, 17, 23, 25, AND 46	12/7/94	JKF			
	REMOVED "PRELIMINARY" NOTE					
A	COMBINE INCINERATOR AND SCRUBBER CONTROL PANELS	3/30/94	GAF			
REV	REVISION	DATE	DR	CHK	APP	APP
D	ELIMINATED TWO INTERMEDIATE SCRUBBER JUNCTION BOXES; MOVED LCP #1, 2 AND 3; SHOW CHART RECORDERS; ADD'L DETAIL	3/13/95	JKF			
C	DWG NO. CHANGED FROM D-01-0691					
REV	REVISION	DATE	DR	CHK	APP	APP
E	ADDED CONDUIT 46; ELIMINATED ASH CONV. CONTROL J.B.	4/3/95	JKF			
REV	REVISION	DATE	DR	CHK	APP	APP

THIS DRAWING IS THE PROPERTY OF CONSUMAT SYSTEMS, INC. AND IS TO BE USED ONLY FOR PURPOSES AS OTHERWISE AGREED TO BY CONSUMAT SYSTEMS, INC. SUBJECT TO RETURN UPON DEMAND AND IS NOT TO BE PRINTED, REPRODUCED, LOANED OR USED IN ANY WAY WITHOUT WRITTEN PERMISSION OF CONSUMAT SYSTEMS, INC.

DR JKF DATE 9/24/93
CHK DATE
APP DATE
APP DATE
ARCHIVE PROJ NO. P5185
NEXT HIGHER ASSY
DO NOT SCALE

CONSUMAT SYSTEMS, INC.
RICHMOND, VA. U.S.A.

TITLE
CS-760-2 WITH INTEREL SCRUBBER
BURROUGHS WELLCOME CO.
RESEARCH TRIANGLE PARK, NC

SCALE 3/16" = 1'
REFERENCE
DWG NO. D-04C-0128
SHEET 3 OF 3
REV. E

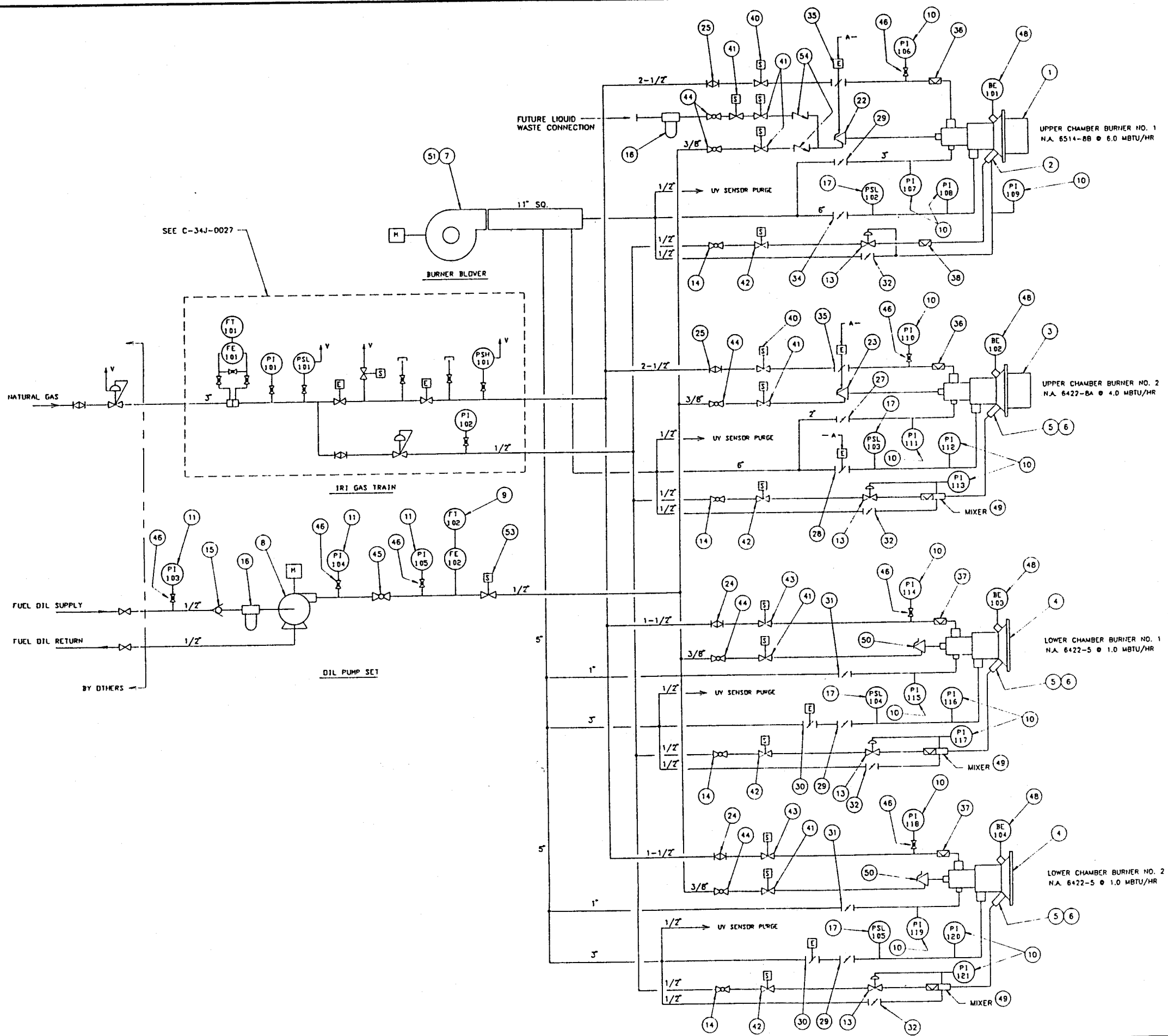

PARTS LIST

QTY	BM	PART NUMBER	DESCRIPTION	CUT	FROM
1	1	05001021	NA #6514-8-B DUAL FUEL BURNER W/ TILE		
1	2	05001026	NA #4020-2-HP GAS PILOT		
1	3	05001008	NA 6422-8-B DUAL FUEL BURNER W/ TILE		
2	4	05001005	NA 6422-5 BURNER W/O TILE		
3	5	05001015	NA 4011-12 PILOT SET		
3	6	05001018	NA 4041 UNIVERSAL PILOT FITTING		
1	7	04000021	NA 2316-21/1-120D BLOWER 20 HP TEFC		
1	8	11000021	WEBSTER PUMP SPH-135 1/2HP 115/230 60 PH		
1	9	06000964	RCH 1/2-71-R-4-V FLOW METER		
16	10	08001008	PRESS.GA. 0-30"WC 2.5"DIA 1/4" BOTT.CONN.		
3	11	08000803	GAUGE 0-60 PSI 2.5" LIQ FILL 1/4" BTM CN		
REF	12		(NOT USED)		
4	13	11004200	NA #7350-01 PILOT REGULATOR		
4	14	10003058	CONBRACO #51-104-01 VALVE		
1	15	10005250	CHECK VALVE 1/2" NPT CL-150		
2	16	11000053	FULFLO 2M053 OIL FILTER		
4	17	06000646	H/V PRESS SV. RC645C1020		
REF	18		(NOT USED)		
REF	19		(NOT USED)		
REF	20		(NOT USED)		
REF	21		(NOT USED)		
1	22	10003097	NA 1813M-02-B OIL VALVE W/ BLL		
1	23	10003094	NA 1813M-02-B OIL VALVE W/ BLL		
2	24	10002101	ECCENTRIC PLUG GAS VALVE ECL #19794 1.5"		
2	25	10002102	ECCENTRIC PLUG GAS VALVE ECL #19796 2.5"		
REF	26		(NOT USED)		
1	27	10003152	2" BUTTERFLY AIR VALVE NA 1122-4		
1	28	10002077	6" BUTTERFLY AIR VALVE 24BV-ABD W/ BLL		
3	29	10003117	3" BUTTERFLY AIR VALVE NA #1122-6		
2	30	10003118	3" BUTTERFLY AIR VALVE NA 1126-6 W/ BLL		
2	31	10003151	1" BUTTERFLY AIR VALVE NA 1122-1		
4	32	10003150	3/4" BUTTERFLY AIR VALVE N.A. 1122-0		
REF	33		(NOT USED)		
1	34	10002078	6" BUTTERFLY AIR VALVE ECL 24BV		
2	35	10003140	2.5" BUTTERFLY AIR VALVE NA 1124-5 W/ BLL		
2	36	10003136	2.5 LIMITING GAS ORIFICE NA 1807-5		
2	37	10003133	1.5 LIMITING GAS ORIFICE NA 1807-3		
1	38	10003129	1/2 LIMITING GAS ORIFICE NA 1807-01		
REF	39		(NOT USED)		
2	40	10000133	ASCO 2-WAY SOLENOID 2.5" #8215A90 NC		
6	41	10000613	ASCO 2-WAY SOLENOID 3/8" 8266D11V NC		
4	42	10000102	ASCO 2-WAY SOLENOID 1/8" #8262G2 NC		
2	43	10000124	ASCO 2-WAY SOLENOID 1.5" #8215B70 NC		
5	44	10005360	3/8" BALL VALVE 150# VDG		
1	45	10005361	1/2" BALL VALVE 150# VDG		
7	46	10005275	1/4" BALL VALVE 150# VDG		
REF	47		(NOT USED)		
REF	48		UV FLAME SENSOR		
REF	49		GAS/AIR MIXER VALVE (INCL. W/ PILOT)		
REF	50		MANUAL OIL VALVE (INCL. W/ BURNER)		
1	51	04000027	NA #2936-10 SILENCER		
1	52	C-34J-0027	FUEL TRAIN ASSEMBLY N.G. - 3"		
1	53	10000616	ASCO 2-WAY SOLENOID 1/2" #8266D57V		
2	54	10005249	CHECK VALVE 3/8" NPT CL-150		

REV	REVISION	DATE	DR	CHK	APP	APP
C	N.G. FUEL TRAIN TO C-34J-0027	6-23-94	DEK			
B	ADD SILENCER	5-27-94	DEK			
A	REV AIR PIPE SIZES	5-23-94				
F						
E	REV N.G. FUEL TRAIN FLO TRANS	10-18-94	DEK			
D	ADD P53,P54; ADD (1) P41	8-11-94	DEK			
I						
H						
G						

THIS DRAWING IS THE PROPERTY OF CONSUMAT SYSTEMS, INC. AND IS TO BE USED ONLY FOR PURPOSES DULY ORDER FOR CONSUMAT SYSTEMS, INC. SUBJECT TO RETURN UPON DEMAND AND IS NOT TO BE PRINTED, REPRODUCED, COPIED, REPRODUCED, LOANED OR USED IN ANY WAY WITHOUT WRITTEN PERMISSION OF CONSUMAT SYSTEMS, INC.

DR DEK DATE 5-4-94
CHK DATE
APP DATE
APP DATE
ARCHIVE PROJ NO. P5185

CONSUMAT SYSTEMS, INC.
RICHMOND, VA. U.S.A.

TITLE
BURNER FUEL/AIR SCHEMATIC
CONSUMAT 760 SYSTEM
BURROUGHS WELLCOME CO.

NEXT HIGHER ASSY
DO NOT SCALE

SCALE 1=1
REFERENCE

DWG NO. D-34J-0026
SHEET 1 OF 1

REV E

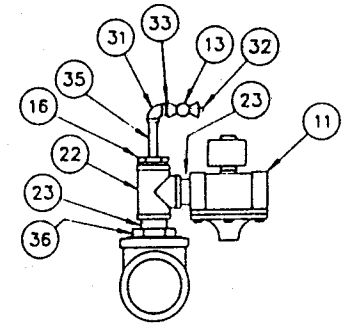

SECTION "A-A"

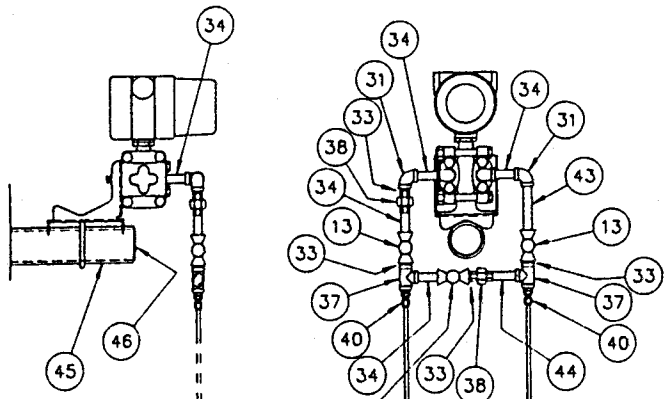

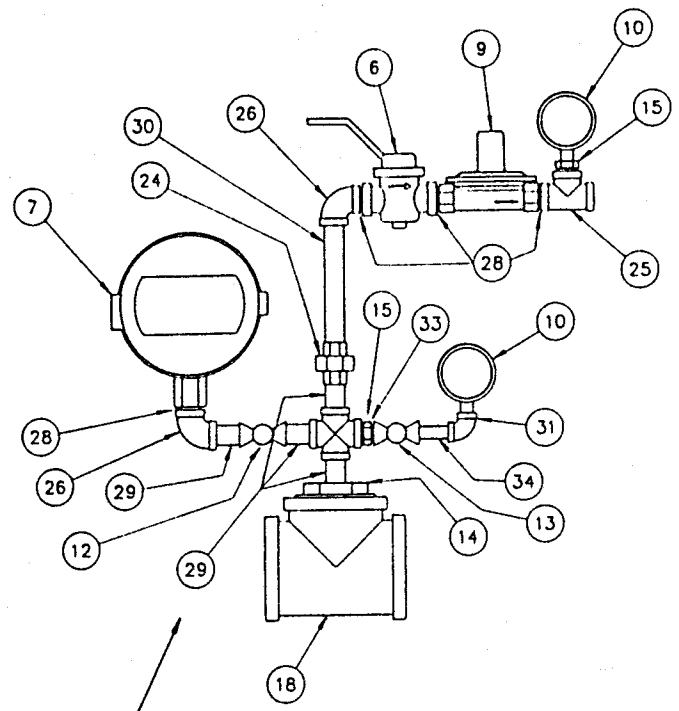

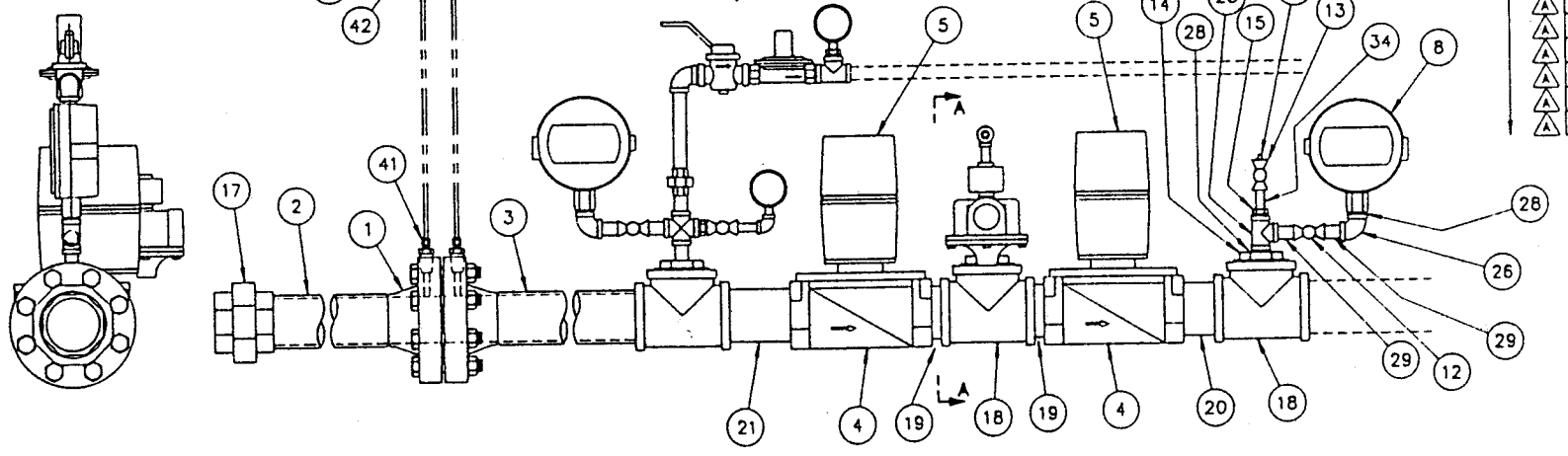

QTY	BM	PART NUMBER	DESCRIPTION	CUT FROM	
1	1	17009294	V-S 3' 300# ORIFICE FLG. UNION		
1	2	C-34J-0027 P02	3 SCH 40 PIPE X 30 TOE	2.50	01005048
1	3	C-34J-0027 P03	3 SCH 40 PIPE X 16 TOE	1.33	01005048
2	4	10002041	HV BLOCKING VALVE 3' V5055A1053		
2	5	10002042	HV VALVE ACTUATOR V4055A1098		
1	6	10002100	ECCENTRIC PLUG GAS VALVE ECL #19790 1/2'		
1	7	06000438	HV LO PRESSURE SWITCH C437E1004		
1	8	06000437	HV HI PRESSURE SWITCH C437D1005		
1	9	11004190	MAXITROL REG 325-3, 1/2' W/ 12A09 VNT LIM		
2	10	08001008	PRESS GA 0-30' VC, 2.5' 1/4' BTM CONN		
1	11	10000414	ASCO 2-WAY SOLENOID 8215C63 NO		
2	12	10005361	1/2' BALL VALVE 150# VOG		
6	13	10005275	1/4' BALL VALVE 150# VOG		
2	14	17000969	3 X 1/2 HEX BUSHING CL-125 CI		
3	15	17000934	1/2 X 1/4 HEX BUSHING CL-125 CI		
1	16	17000949	1-1/4 X 1/4 HEX BUSHING CL-125 CI		
1	17	17000880	3 NPT MI CL-150 UNION		
3	18	17000597	3 NPT MI CL-150 TEE		
2	19	17000172	3 X CLOSE NIPPLE SCH 40		
1	20	17000175	3 X 4 NIPPLE SCH 40		
1	21	17000179	3 X 6 NIPPLE SCH 40		
1	22	17000593	1-1/4 NPT MI CL-150 TEE		
2	23	17000112	1-1/4 X 2 NIPPLE SCH 40		
1	24	17000873	1/2 NPT MI CL-150 UNION		
2	25	17000590	1/2 NPT MI CL-150 TEE		
3	26	17000504	1/2 NPT MI 90 DEG ELL CL-150		
1	27	17000720	1/2 NPT MI CL-150 CROSS		
6	28	17000057	1/2 X CLOSE NIPPLE SCH 40		
6	29	17000059	1/2 X 2 NIPPLE SCH 40		
1	30	17000067	1/2 X 6 NIPPLE SCH 40		
4	31	17000502	1/4 NPT MI 90 DEG ELL CL-150		
2	32	17000901	1/4' PIPE PLUG		
6	33	17000019	1/4 X CLOSE NIPPLE SCH 40		
7	34	17000021	1/4 X 2 NIPPLE SCH 40		
1	35	17000023	1/4 X 3 NIPPLE SCH 40		
1	36	17000992	3 X 1-1/4 HEX BUSHING CI CL-125		
2	37	17000588	1/4 NPT MI CL-150 TEE		
2	38	17000871	1/4 NPT MI CL-150 UNION		
1	39	20002243	RSMT 3051DP-1A52A1AB4 FLOW TRANS.		
2	40	14006109	SVAGELOK S-400-1-4 CONNECTOR		
2	41	14006103	SVAGELOK S-400-1-8 CONNECTOR		
2	42	C-34J-0027 P42	1/4' OD X .035 WALL TUBE 60' LG	5.00	14005400
1	43	C-34J-0027 P43	1/4 SCH 40 PIPE X 3 5/8 TBE	0.30	01005007
1	44	C-34J-0027 P44	1/4 SCH 40 PIPE X 2 3/16 TBE	0.18	01005007
1	45	C-34J-0027 P45	2 SCH 40 PIPE X 8	0.67	01005032
1	46	C-34J-0027 P46	12 GA 2 1/8 X 2 1/8 (2-1/16' OD)	0.001	01000125

ADD

REV	REVISION	DATE	DR	CHK	APP	APP
C						
B	REV LEN P02 & P03	10-24-94	DEK			
A	REV PARTS LIST, REV FLOW TRANS.	10-17-94	DEK			

REV	REVISION	DATE	DR	CHK	APP	APP
F						
E						
D						

THIS DRAWING IS THE PROPERTY OF CONSUMAT SYSTEMS, INC. AND IS TO BE USED ONLY FOR PRODUCING ITEMS ON ORDER FOR CONSUMAT SYSTEMS, INC. SUBJECT TO RETURN UPON DEMAND AND IS NOT TO BE PRINTED, PHOTOGRAPHED, COPIED, REPRODUCED, LOANED OR USED IN ANY WAY WITHOUT WRITTEN PERMISSION OF CONSUMAT SYSTEMS, INC.

DR	DEK	DATE	6-22-94
CHK		DATE	
APP		DATE	
APP		DATE	
ARCHIVE		PROJ NO.	P5185

CONSUMAT SYSTEMS, INC.
RICHMOND, VA. U.S.A.

TITLE
FUEL TRAIN ASSEMBLY NATURAL GAS - I.R.I. - 3" BURROUGHS WELLCOME CO.

NEXT HIGHER ASSY		DWG. NO.	REV.
SCALE	1 1/2" = 1'	C-34J-0027	B
DO NOT SCALE	REFERENCE	SHEET OF	

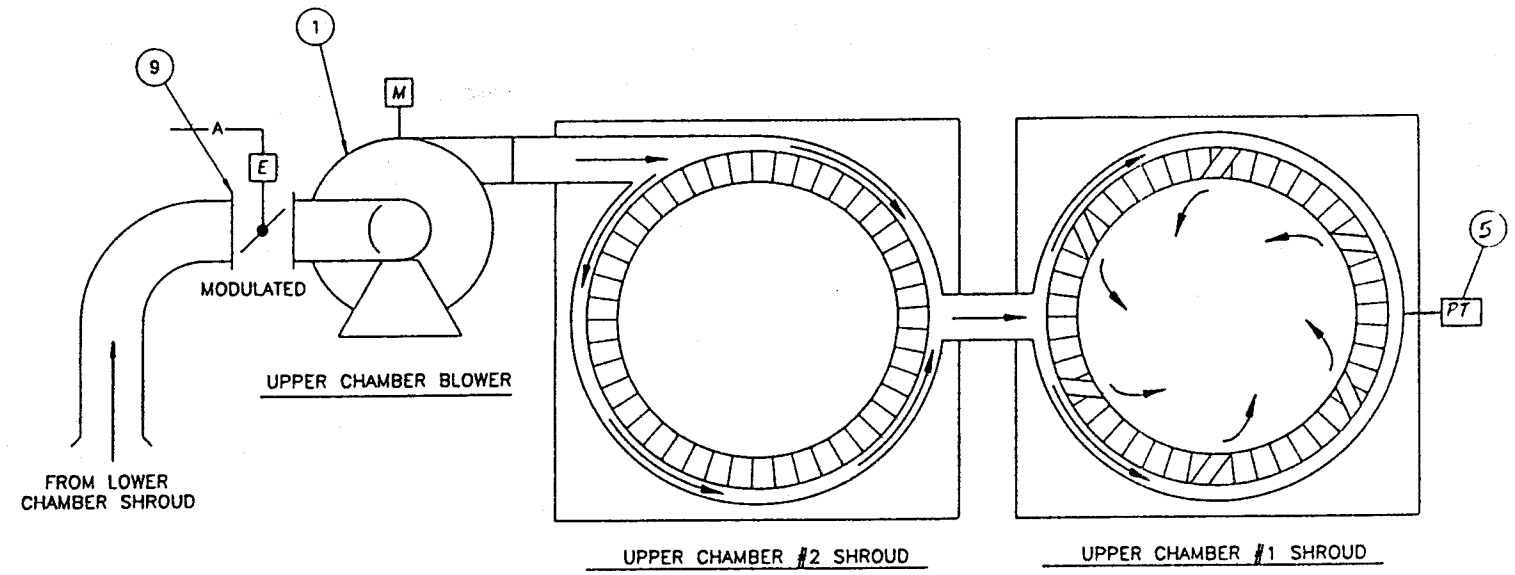

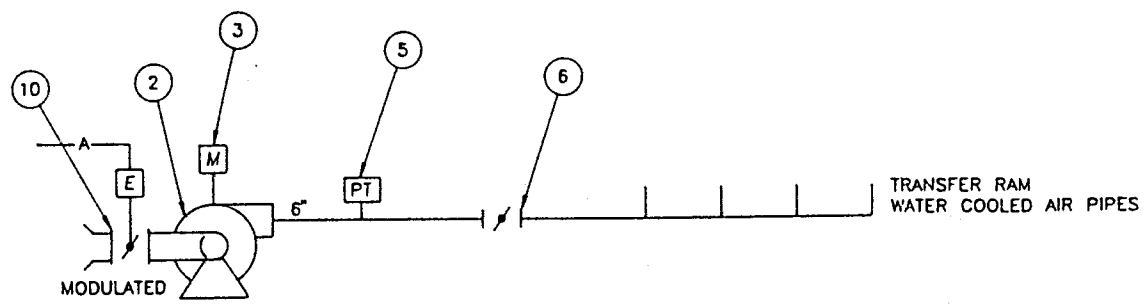

LOWER CHAMBER BLOWER

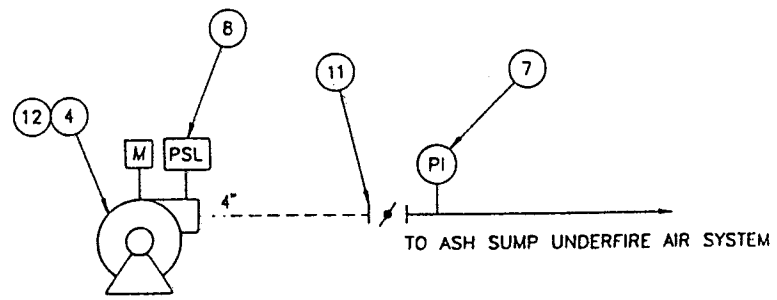

ASH SUMP
UNDERFIRE AIR
BLOWER
N.A. 2310-19/1-T1D

PARTS LIST

QTY	BM	PART NUMBER	DESCRIPTION	CUT FROM	
1	1	04000521	AMER 19AH BLOVER 20 HP		
1	2	04000003	DAYTON 4C108 BLOVER		
1	3	03000011	1 HP TEFC 3450 MOTOR 460/3/60		
1	4	04000033	NA 2310-19/1-T1D BLOVER 1 HP		
REF	5		PRESSURE TRANSMITTER		
1	6	10002078	ECLIPSE 24BV AIR VALVE 6"		
1	7	08000920	PRESS.GA. 0-15"VC 2.5"DIA 1/4" BOTT.CONN.		
1	8	06000646	H/V PRESS SV. #C645C1020		
REF	9		INLET DAMPER ASSEMBLY		
REF	10		INLET DAMPER ASSEMBLY 4C108		
REF	11		4" AIR HEADER ASSEMBLY		
1	12	04000031	NA FILTER-SILENCER 2942-8-MGN/T		

P5185

REV	REVISION	DATE	DR	CHK	APP	APP
C						
B						
A	ADD SILENCER	5-27-94	DEK			

REV	REVISION	DATE	DR	CHK	APP	APP
F						
E						
D						

THIS DRAWING IS THE PROPERTY OF CONSUMAT SYSTEMS, INC. AND IS TO BE USED ONLY FOR PRODUCING ITEMS ON ORDER FOR CONSUMAT SYSTEMS, INC. SUBJECT TO RETURN UPON DEMAND AND IS NOT TO BE PRINTED, PHOTOGRAPHED, COPIED, REPRODUCED, LOANED OR USED IN ANY WAY WITHOUT WRITTEN PERMISSION OF CONSUMAT SYSTEMS, INC.

DR DEK	DATE 5-10-94	CONSUMAT SYSTEMS, INC. RICHMOND, VA. U.S.A.	
CHK	DATE		
APP	DATE	TITLE	
APP	DATE	COMBUSTION AIR SCHEMATIC CONSUMAT CS-760 SYSTEM BURROUGHS WELLCOME CO.	
ARCHIVE	PROJ NO. ~~P5188~~		
NEXT HIGHER ASSY		SCALE 1 = 1	DWG. NO. C-34R-0122 SHEET 1 OF 1
DO NOT SCALE		REFERENCE	REV. A

PARTS LIST					
QTY	BM	PART NUMBER	DESCRIPTION	CUT	FROM
1	1	11001613	HYD POWER UNIT 15 HP, 40 GAL		
1	2	11001755	5 VALVE/MANIFOLD SET		
1	3	11001703	HYD POWER UNIT 3 HP 20 GAL		
1	4	11001752	2-VALVE/MANIFOLD SET		
2	5	12001344	HYD CYL L22, 3.25" X 46" CS,SL,RE		
1	6	12001212	HYD CYL C16, 2.5" X 20" CS,TM,RE,XI=15.5		
2	7	12001557	HYD CYL FD18, 2.5" X 33" CS,CM,RC		
1	8	12001643	HYD CYL TR29, 5" X 40" CS,TM,RE,3" DP		
2	9	12001663	HYD CYL AR12, 5" X 46" CS,TM,RE,3"DP		
12	10	12001499	HYD CYL AR10, 1.5" X 1" CS,FF		
4	11	10007020	FLOW CONTROL VALVE 1/4" DELTROL T20BK		
1	12	10000504	ASCO SOLENOID VALVE 8262132		
1	13	07005100	BARKSDALE PRESS. SWITCH #C9612-3		
2	14	10004402	FLUID CONTROLS ILL22-F4-2		

LOADER

HOPPER DOOR

RAM

FIRE DOOR

LOWER CHAMBER

TRANSFER RAM

ASH REMOVER RAM

AIR JET PLUNGERS (12) A

ASH QUENCH/CONVEYOR

HYD. MOTOR

SV 401 SV 402 SV 403 SV 404 SV 405 SV 406 SV 407 SV 408

PSH 401

PI 401 LG 401 TI 401 LSL 401

HYD. PUMP

LOADER/INCINERATOR HYDRAULIC SYSTEM

ASH SUMP/CONVEYOR HYDRAULIC SYSTEM

REV	REVISION	DATE	DR	CHK	APP	APP
C						
B						
A	AIR JET PLUNGER QTY WAS 9	6-17-94	JDK			

THIS DRAWING IS THE PROPERTY OF CONSUMAT SYSTEMS, INC. AND IS TO BE USED ONLY FOR PROVIDING ITEMS BY ORDER FOR CONSUMAT SYSTEMS, INC. SUBJECT TO RETURN UPON DEMAND AND IS NOT TO BE PERMITTED, PHOTOGRAPHED, COPIED, REPRODUCED, LOANED OR USED IN ANY WAY WITHOUT WRITTEN PERMISSION OF CONSUMAT SYSTEMS, INC.

DR	DATE
DEK	5-11-94
CHK	DATE
APP	DATE
APP	DATE
ARCHIVE	PROJ NO. P5185

CONSUMAT SYSTEMS, INC.
RICHMOND, VA. U.S.A.

TITLE
HYDRAULIC SCHEMATIC
CONSUMAT CS-760 SYSTEM
BURROUGHS WELLCOME CO.

NEXT HIGHER ASSY

DO NOT SCALE

SCALE 1 = 1

REFERENCE

DWG NO. D-34F-0186

REV. A

SHEET 1 OF 1

PARTS LIST					
QTY	BM	PART NUMBER	DESCRIPTION	CUT	FROM
1	1	08000900	PRESS GA 0-100 PSIG 2.5' 1/4' BTM CONN		
1	2	10005275	1/4' BALL VALVE 1500 VDG		
7	3	10005361	1/2' BALL VALVE 1500 VDG		
2	4	10000880	STRAINER, 1/2' VVG 83P849		
3	5	10000308	ASCO 2-WAY SOLENOID 1/2' #8210C94 NC		
2	6	29001510	WATER COOLED WATER SPRAY NOZZLE		

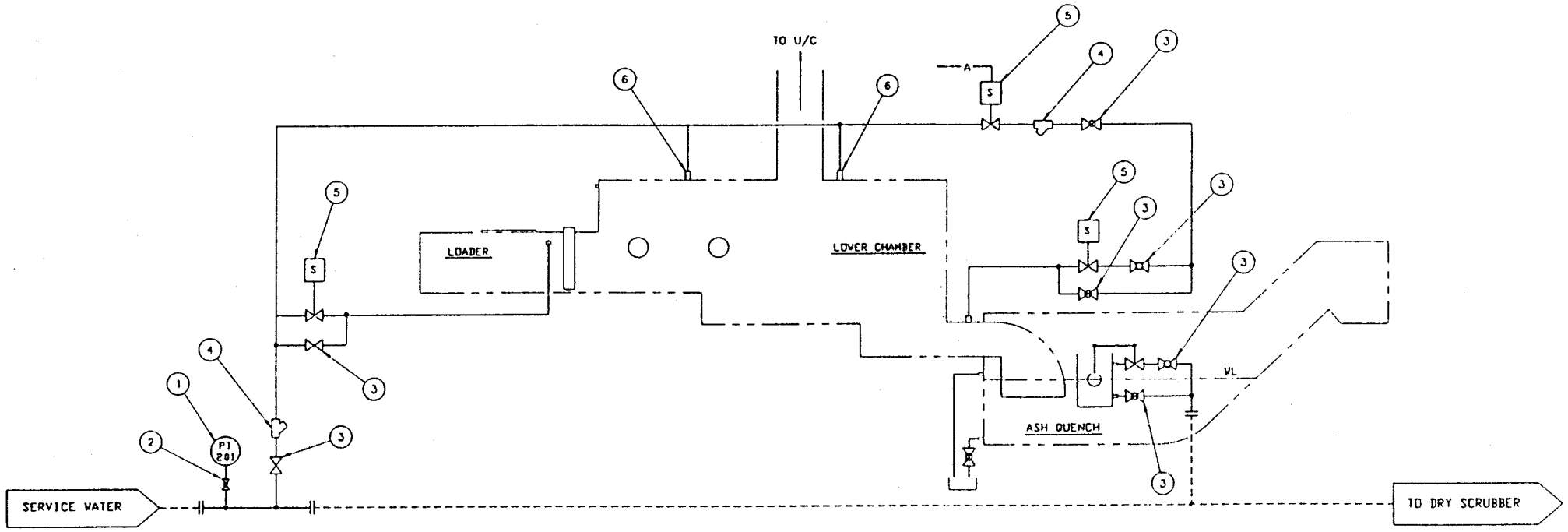

NOTES:

1. ALL PIPING INDICATED BY DASHED LINES IS SUPPLIED AND INSTALLED BY OTHERS.

THIS DRAWING IS THE PROPERTY OF CONSUMAT SYSTEMS, INC. AND IS TO BE USED ONLY FOR PROTRACTING ITEMS ON ORDER FOR CONSUMAT SYSTEMS, INC. SUBJECT TO RETURN UPON DEMAND AND IS NOT TO BE PRINTED, PHOTOGRAPHED, COPIED, REPRODUCED, LOANED OR USED IN ANY WAY WITHOUT WRITTEN PERMISSION OF CONSUMAT SYSTEMS, INC.

DR DEK	DATE 5-17-94	CONSUMAT SYSTEMS, INC. RICHMOND, VA. U.S.A.
CHK	DATE	
APP	DATE	TITLE: SPRAY WATER SCHEMATIC CS-760 BURROUGHS WELLCOME CO.
APP	DATE	
ARCHIVE	PROJ NO. P5185	
NEXT HIGHER ASSY		SCALE 1 = 1
DO NOT SCALE		REFERENCE
		DWG NO. D-34B-0198 SHEET 1 OF 1
		REV.

REV	REVISION	DATE	DR	CHK	APP	APP
C						
B						
A						

REV	REVISION	DATE	DR	CHK	APP	APP
F						
E						
D						

REV	REVISION	DATE	DR	CHK	APP	APP
I						
H						
G						

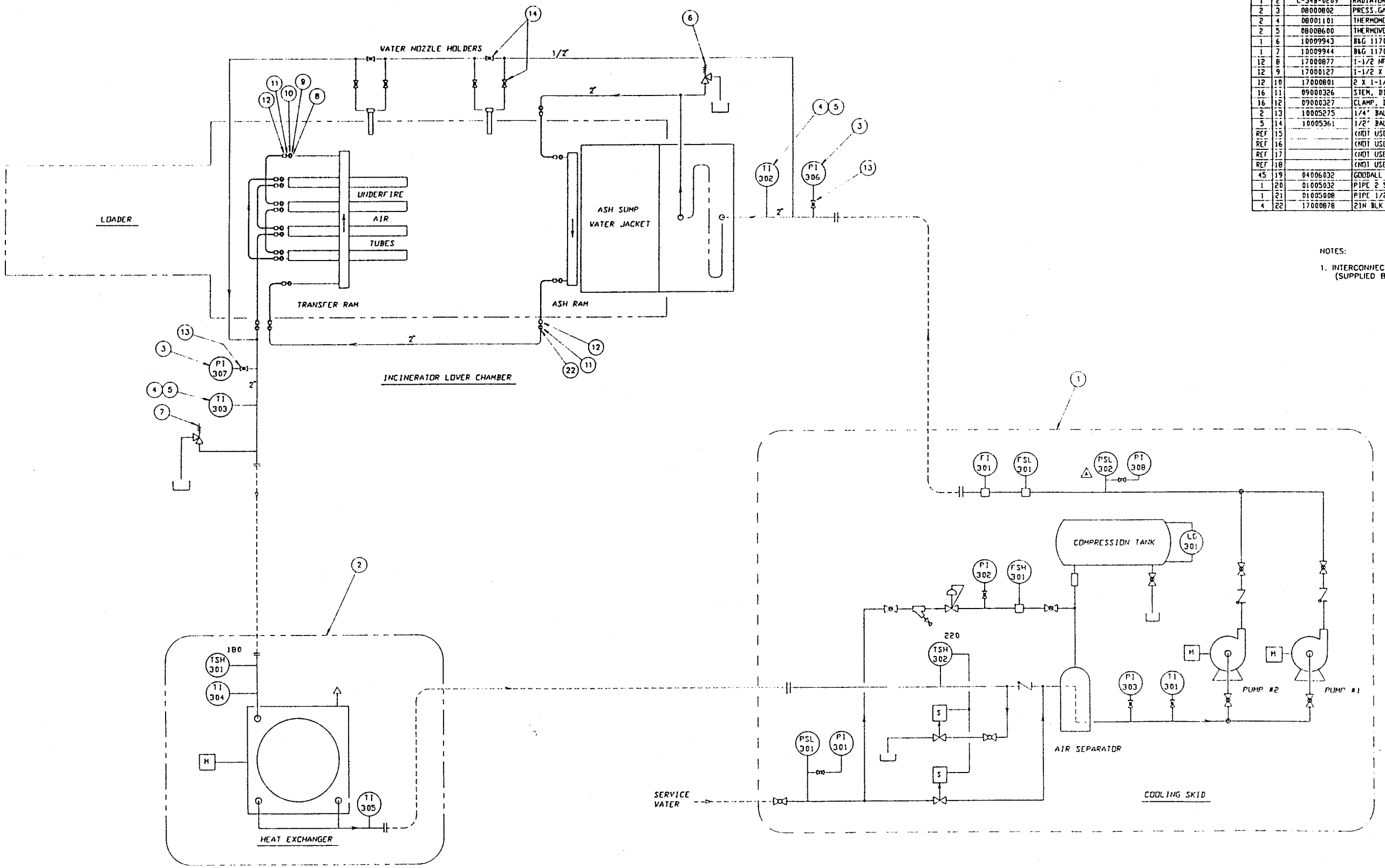

PARTS LIST

QTY	ITM	PART NUMBER	DESCRIPTION	CUT FROM	
1	1	D-34B-0199	COOLING SKID ASSEMBLY		
1	2	C-34B-0209	RADIATOR PIPING ASSEMBLY YOUNG 6603		
2	3	08000802	PRESS.GA. 0-60 PSIG 2"DIA 1/4" BOTT.CONN.		
2	4	08001101	THERMOMETER, 3"DIA. 4"STEM, 1/2" NPT		
2	5	08008600	THERMOWELL		
1	6	10009943	B&G 1170-50 P.R.V. 1" SET @ 50 PSIG		
1	7	10009944	B&G 1170-36 P.R.V. 1" SET @ 36 PSIG		
12	8	17000877	1-1/2 NPT MI CL-150 UNION		
12	9	17000127	1-1/2 X CLOSE NIPPLE SCH 40		
12	10	17000801	2 X 1-1/2 MI CL-150 CONC REDUCER		
16	11	09000326	STEM, DIXON BOSS 2" RMS-26		
16	12	09000327	CLAMP, DIXON BOSS 2" RBU-29		
2	13	10005275	1/4" BALL VALVE 150# VDG		
5	14	10005361	1/2" BALL VALVE 150# VDG		
REF	15		(NOT USED)		
REF	16		(NOT USED)		
REF	17		(NOT USED)		
REF	18		(NOT USED)		
45	19	04006032	GOODALL 2" STEAM HOSE AN-2069		
1	20	01005032	PIPE 2 SCH 40 X 21'		
1	21	01005008	PIPE 1/2 SCH 40 X 21'		
4	22	17000878	2IN BLK MI CL-150 UNION		

NOTES:

1. INTERCONNECTING PIPING TO BE 2" SCH 40 STEEL (SUPPLIED BY OTHERS)

REV	REVISION	DATE	DR	CHK	APP	APP
C						
B	REV PIPING AT RADIATOR	2-14-95	DEK			
A	ADD LPS302,PI308	9-15-94	DEK			

THIS DRAWING IS THE PROPERTY OF CONSUMAT SYSTEMS, INC AND IS TO BE USED ONLY FOR PURPOSES OBTAINED FOR CONSUMAT SYSTEMS, INC. SUBJECT TO RETURN UPON DEMAND AND IS NOT TO BE PRINTED, REPRODUCED, LOANED OR USED IN ANY WAY WITHOUT WRITTEN PERMISSION OF CONSUMAT SYSTEMS, INC.

		DATE
DR	DEK	5-20-94
CHK		DATE
APP		DATE
APP		DATE
ARCHIVE	PROJ NO. P5185	
NEXT HIGHER ASSY	DO NOT SCALE	

CONSUMAT SYSTEMS, INC.
RICHMOND, VA. U.S.A.

TITLE
COOLING LOOP SCHEMATIC
CS-760 SYSTEM

SCALE 1 = 1
REFERENCE

DWG. NO. D-34B-0200
SHEET 1 OF 1

REV B

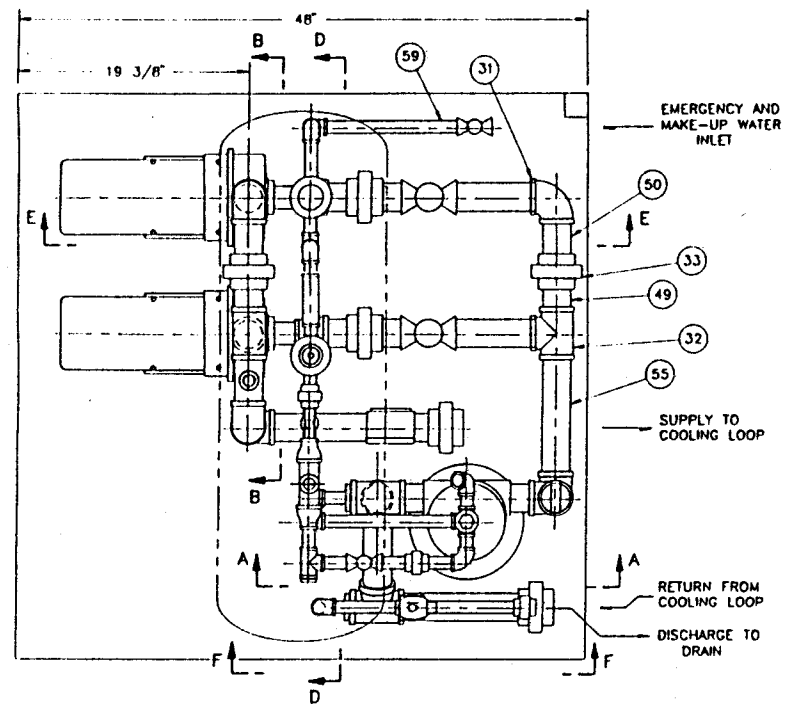

PLAN VIEW

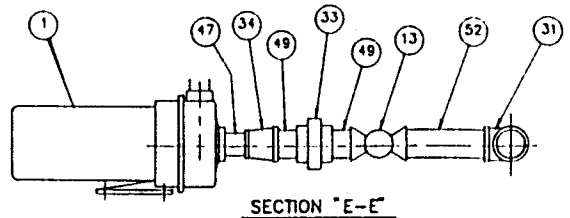

SECTION "E-E"

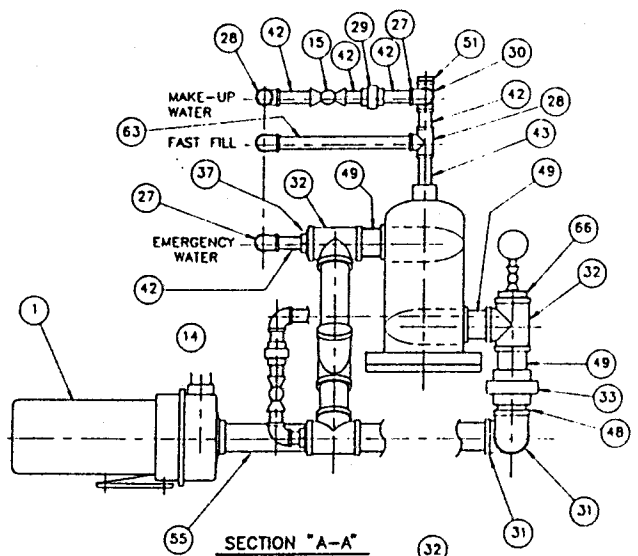

SECTION "A-A"

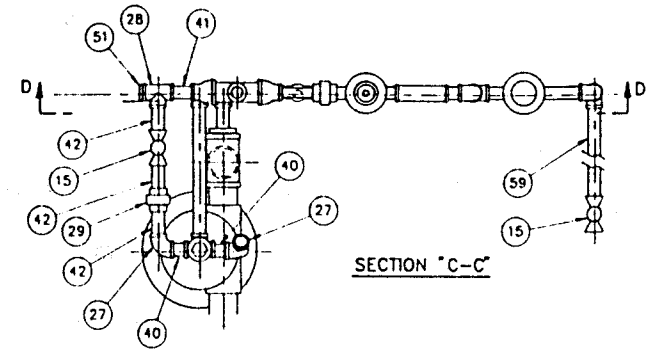

SECTION "C-C"

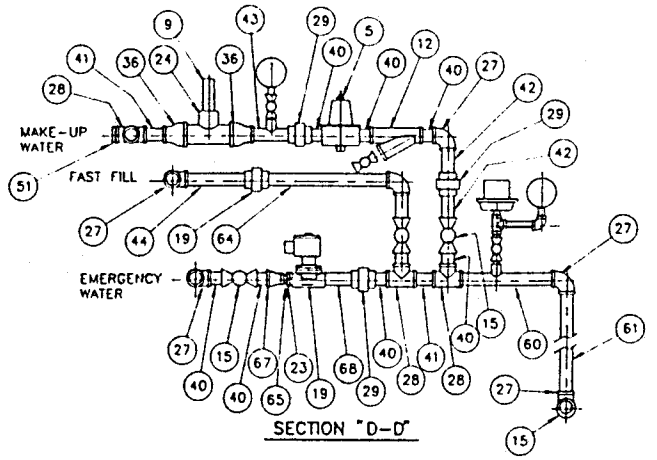

SECTION "D-D"

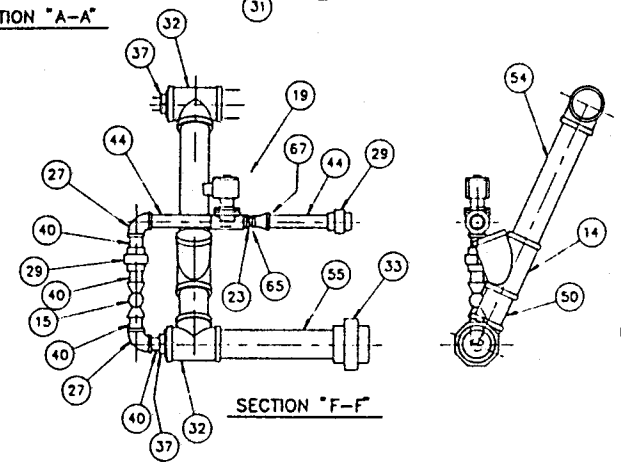

SECTION "F-F"

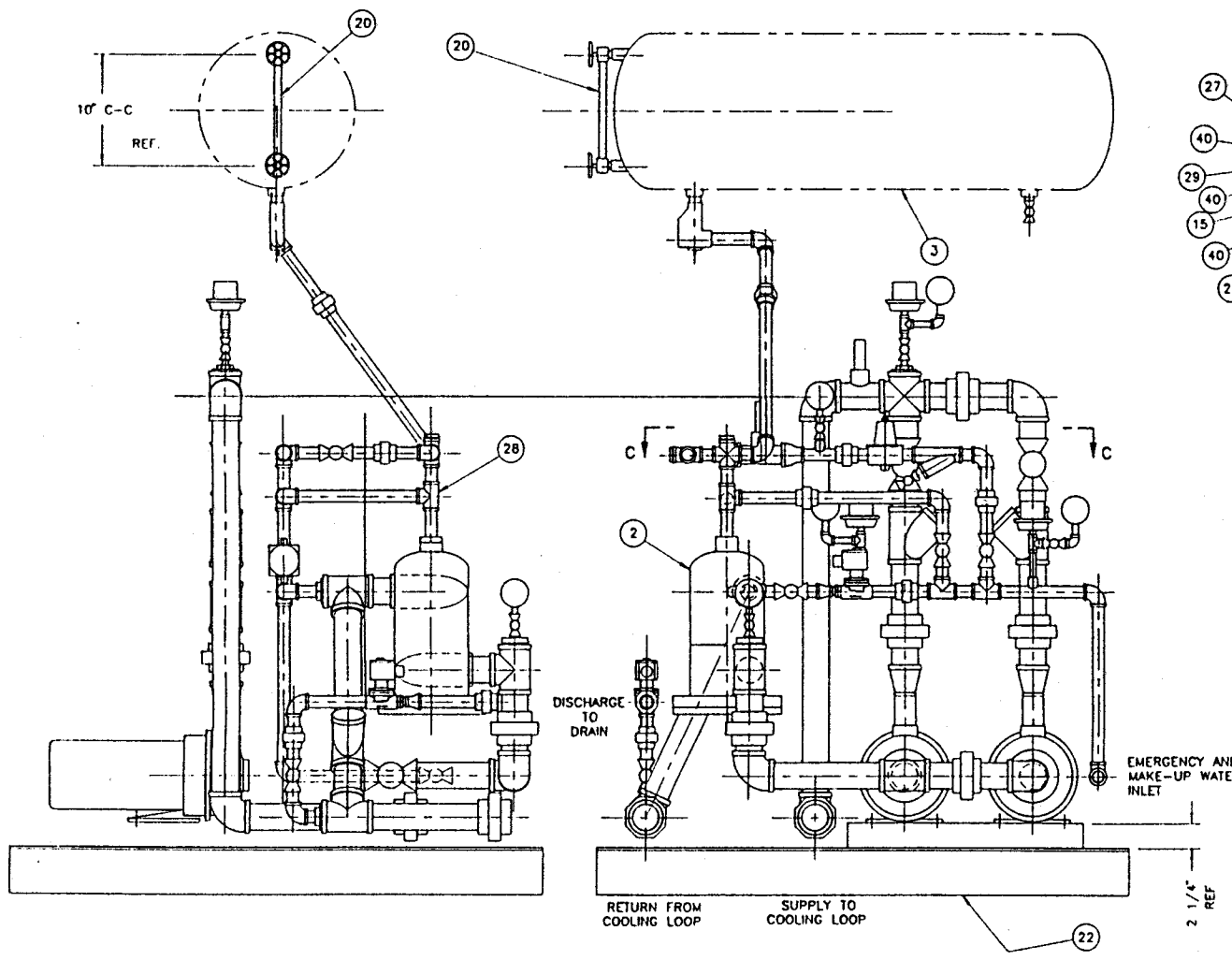

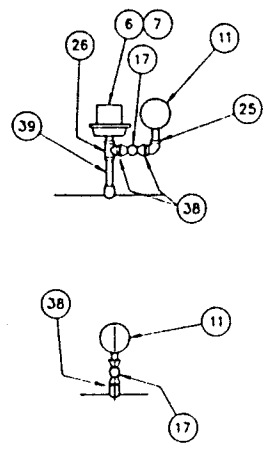

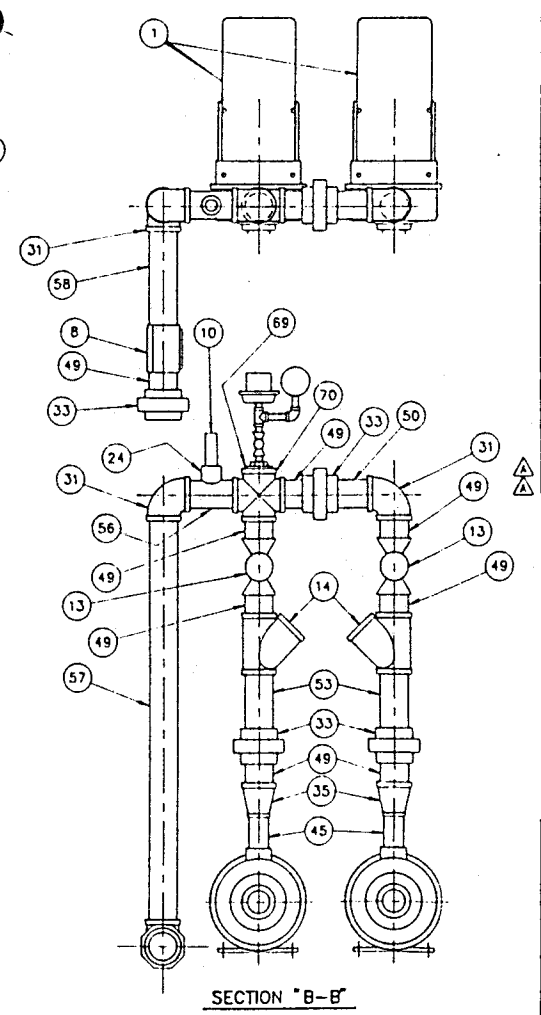

SECTION "B-B"

WLIGHT: 1000# APPROX.

QTY	BM	PART NUMBER	DESCRIPTION	CUT FROM	
2	1	11006996	GOULD NPE/2ST 1.5 HP PUMP 3EFC 3450 RPM		
1	2	11001501	AIR SEPARATOR B&G AR-2		
REF	3	11000218	COMPRESSION TANK B&G 30 GAL.		
1	4	11004001	TANK FITTING B&G AAFT-12		
1	5	10009900	PRESS.RED. VLV. B&G 812 8-25# RANGE		
2	6	10001160	PRESSURE SWITCH ASCO #SB11D		
2	7	10001214	PRESS.TRANSDUCER UNIT ASCO #1E10A21		
1	8	06008960	RCH 2" 71-2-60 FLOW METER		
1	9	07005091	FLOW SV. 1 1/4" PIPE GEMS #FS-550-30641		
1	10	07005090	LOW FLOW SWITCH GEM FS-550-29609		
4	11	08000802	PRESS.GA. 0-60 PSIG 2"DIA 1/4" BOTT.CONN.		
1	12	10000881	STRAINER, 3/4" VVG #3P850		
4	13	10005265	2" BALL VALVE 150# VOG		
3	14	10005257	2 IN SWING CHECK VALVE		
7	15	10005366	3/4" BALL VALVE 150# VOG		
1	16	10005360	3/8" BALL VALVE 150# VOG		
4	17	10005275	1/4" BALL VALVE 150# VOG		
REF	18		(NOT USED)		
2	19	10000609	ASCO 2-WAY SOLENOID 3/4" #8210C35		
1	20	11000225	LIQ LEVEL GA 10"C-C W/ GUARDS & VALVES		
1	21	D-34B-0188	COOLING SKID STRUCTURAL ASSEMBLY		
3	22	17000743	1/4 NPT STEEL COUPLING		
1	23	17000935	3/4 X 3/8 CI CL-125 HEX BUSHING		
2	24	17000747	1 IN NPT STEEL COUPLING		
2	25	17000502	1/4 NPT MI CL-150 90 DEG ELL		
2	26	17000588	1/4 NPT MI CL-150 TEE		
10	27	17000505	3/4 NPT MI CL-150 90 DEG ELL		
4	28	17000591	3/4 NPT MI CL-150 TEE		
7	29	17000874	3/4 NPT MI CL-150 UNION		
1	30	17000721	3/4 NPT MI CL-150 CROSS		
5	31	17000509	2 IN NPT MI CL-150 90 DEG ELL		
5	32	17000595	2IN NPT MI CL-150 TEE		
5	33	17000878	2 IN NPT MI CL-150 UNION		
2	34	17000801	2 X 1-1/2 MI CL-150 CONC REDUCER		
2	35	17000802	2 X 1-1/4 MI CL-150 CONC REDUCER		
2	36	17000795	1-1/4 X 3/4 MI CL-150 CONC REDUCER		
2	37	17000959	2 X 3/4 CI CL-125 RED. BUSHING		
9	38	17000019	1/4 X CLOSE NIPPLE SCH 40		
2	39	17000023	1/4 X 3 NIPPLE SCH 40		
12	40	17000078	3/4 X 2 NIPPLE SCH 40		
3	41	17000079	3/4 X 2-1/2 NIPPLE SCH 40		
10	42	17000080	3/4 X 3 NIPPLE SCH 40		
1	43	17000082	3/4 X 4 NIPPLE SCH 40		
3	44	17000086	3/4 X 6 NIPPLE SCH 40		
2	45	17000116	1-1/4 X 4 NIPPLE SCH 40		
1	46	17000118	1-1/4 X 5 NIPPLE SCH 40		
2	47	17000130	1-1/2 X 3 NIPPLE SCH 40		
1	48	17000143	2 X CLOSE NIPPLE SCH 40		
14	49	17000145	2 X 3 NIPPLE SCH 40		
2	50	17000147	2 X 4 NIPPLE SCH 40		
2	51	17000904	3/4 BLK CI CL-125 PLUG		
2	52	D-34B-0199 PS2	2 SCH 40 PIPE X 8 TBE	0.67	01005032
2	53	17000151	2 X 6 NIPPLE SCH 40		
1	54	D-34B-0199 PS4	2 SCH 40 PIPE X 11 5/8 TBE	0.97	01005032
2	55	D-34B-0199 PS5	2 SCH 40 PIPE X 11 TBE	0.92	01005032
1	56	17000149	2 X 5 NIPPLE SCH 40		
1	57	D-34B-0199 PS7	2 SCH 40 PIPE X 34 3/4 TBE	2.90	01005032
1	58	D-34B-0199 PS8	2 SCH 40 PIPE X 9 5/8 TBE	0.80	01005032
1	59	D-34B-0199 PS9	3/4 SCH 40 PIPE X 20 TBE	1.67	01005012
1	60	D-34B-0199 P60	3/4 SCH 40 PIPE X 8 9/16 TBE	0.71	01005012
1	61	D-34B-0199 P61	3/4 SCH 40 PIPE X 15 TBE	1.25	01005012
1	62	D-34B-0199 P62	3/4 SCH 40 PIPE X 15 1/4 TBE	1.27	01005012
1	63	D-34B-0199 P63	3/4 SCH 40 PIPE X 11 3/4 TBE	0.98	01005012
1	64	D-34B-0199 P64	3/4 SCH 40 PIPE X 11 TBE	0.92	01005012
1	65	17000038	3/8 X CLOSE NIPPLE SCH 40		
1	66	17000962	2 X 1/4 CI CL-125 HEX BUS		
1	67	17000787	3/4 X 3/8 MI CL-150 CONC REDUCER		
1	68	D-34B-0199 P68	3/4 SCH 40 PIPE X 3 5/16 TBE	0.28	01005012
1	69	17000962	2 X 1/4 CI CL-125 HEX BUSH		
1	70	17000725	2 IN NPT MI CL-150 CROSS		

THIS DRAWING IS THE PROPERTY OF CONSUMAT SYSTEMS, INC AND IS TO BE USED ONLY FOR PURCHASING ITEMS ON ORDER FOR CONSUMAT SYSTEMS, INC. IT MUST BE RETURNED UPON DEMAND AND IS NOT TO BE PRINTED, PHOTOGRAPHED, COPIED, REPRODUCED, LOANED OR USED IN ANY WAY WITHOUT WRITTEN PERMISSION OF CONSUMAT SYSTEMS, INC.

DR	DATE
DEK	7-23-94
CHK	DATE
APP	DATE
APP	DATE
ARCHIVE	PROJ NO. P5185

CONSUMAT SYSTEMS, INC.
RICHMOND, VA. U.S.A.

TITLE
COOLING SKID ASSEMBLY
CS-760 SYSTEM

NEXT HIGHER ASSY

DO NOT SCALE

SCALE 1 1/2"=1'

REFERENCE

DWG NO. D-34B-0199

SHEET 1 OF 1

REV A

REV	REVISION	DATE	DR	CHK	APP	APP
C						
B						
A	REV PARTS LIST	9-15-94	DEK			

PARTS LIST

QTY	BM	PART NUMBER	DESCRIPTION	CUT FROM	
1	1	10001160	ASCO #SB11D SWITCH		
1	2	10001210	ASCO #QL10A1 TRANSDUCER		
1	3	17000595	2 IN NPT MI CL-150 TEE		
1	4	17000960	2 X 1/2 NPT CI CL-125 HEX BUSHING		
1	5	17000145	2 X 3 NIPPLE SCH 40		
1	6	17000149	2 X 5 NIPPLE SCH 40		

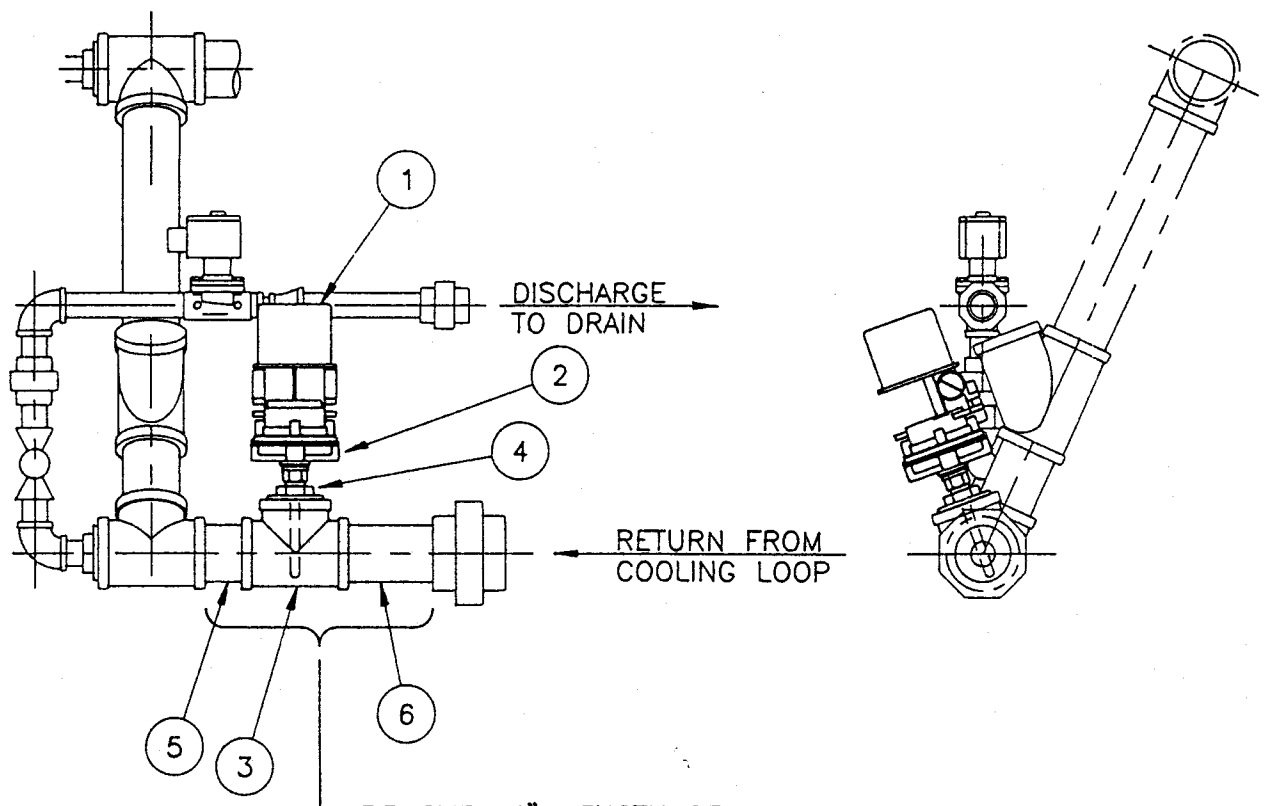

P5188
P5185

THIS DRAWING IS THE PROPERTY OF CONSUMAT SYSTEMS, INC. AND IS TO BE USED ONLY FOR PRODUCING ITEMS ON ORDER FOR CONSUMAT SYSTEMS, INC. SUBJECT TO RETURN UPON DEMAND AND IS NOT TO BE PRINTED, PHOTOGRAPHED, COPIED, REPRODUCED, LOANED OR USED IN ANY WAY WITHOUT WRITTEN PERMISSION OF CONSUMAT SYSTEMS, INC.

DR DEK	DATE 6-6-95	CONSUMAT SYSTEMS, INC. RICHMOND, VA. U.S.A.	
CHK	DATE		
APP	DATE	TITLE: COOLING SKID MODIFICATION TEMP. SWITCH ADDITION	
APP	DATE		
ARCHIVE	PROJ NO. [redacted]		
NEXT HIGHER ASSY		SCALE 1 1/2" = 1'	DWG. NO. B-34B-0222
DO NOT SCALE		REFERENCE	SHEET OF

REV. [ ]

REV	REVISION	DATE	DR	CHK	APP	APP
C						
B						
A						

PARTS LIST					
QTY	BM	PART NUMBER	DESCRIPTION	CUT	FROM
1	1	11008006	ATLAS COPCO GA30-125		
1	2	D-034-0042	AIR/WATER SKID ASSEMBLY		
1	3	B-34C-0078	PNEUMATIC PIPING QUENCH SPRAY NOZZLE		
2	4	B-34C-0092	PRESSURE GAUGE ASSEMBLY 0-160 PSIG		

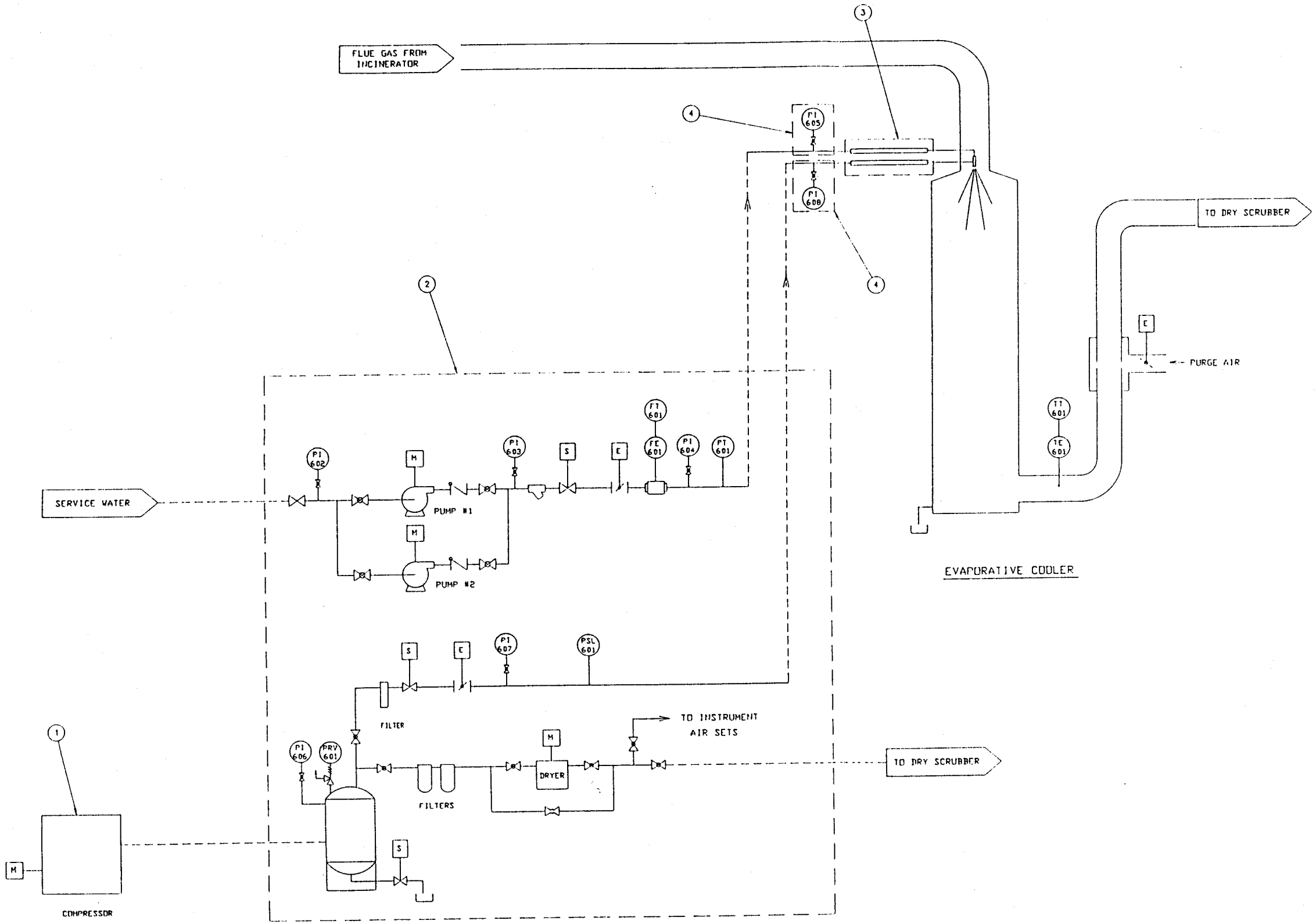

THIS DRAWING IS THE PROPERTY OF CONSUMAT SYSTEMS, INC. AND IS TO BE USED ONLY FOR PRODUCING ITEMS ON ORDER FOR CONSUMAT SYSTEMS, INC. SUBJECT TO RETURN UPON DEMAND AND IS NOT TO BE PRINTED, PHOTOGRAPHED, COPIED, REPRODUCED, LOANED OR USED IN ANY WAY WITHOUT WRITTEN PERMISSION OF CONSUMAT SYSTEMS, INC.

DR DEK	DATE 6-16-94	CONSUMAT SYSTEMS, INC. RICHMOND, VA. U.S.A.
CHK	DATE	
APP	DATE	TITLE AIR & WATER SPRAY SCHEMATIC FLUE GAS QUENCH SYSTEM BURROUGHS WELLCOME CO.
APP	DATE	
ARCHIVE	PROJ NO. P5185	
NEXT HIGHER ASSY		SCALE 1 = 1
DO NOT SCALE		REFERENCE
DWG NO. D-34C-0091 SHEET 1 OF 1		REV.

REV	REVISION	DATE	DR	CHK	APP	APP	REV	REVISION	DATE	DR	CHK	APP	APP	REV	REVISION	DATE	DR	CHK	APP	APP
C							F							I						
B							E							H						
A							D							G						

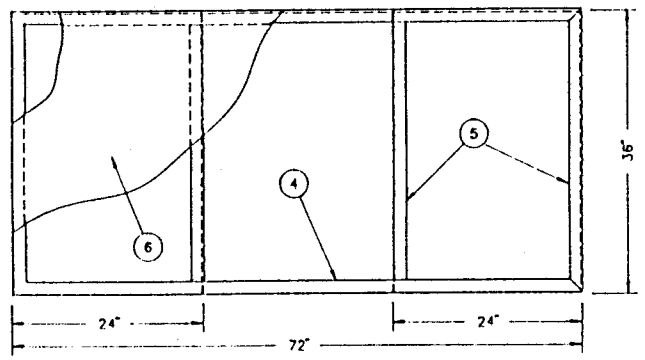

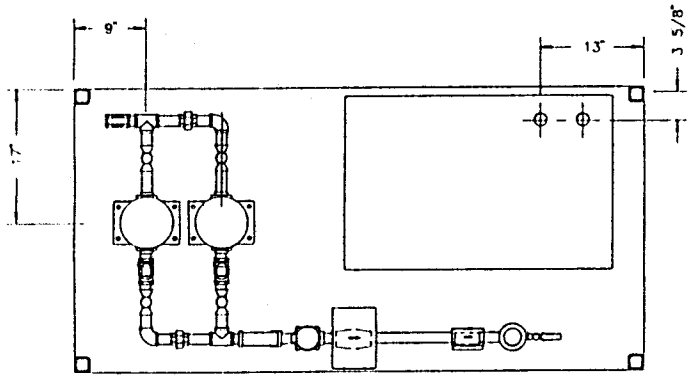

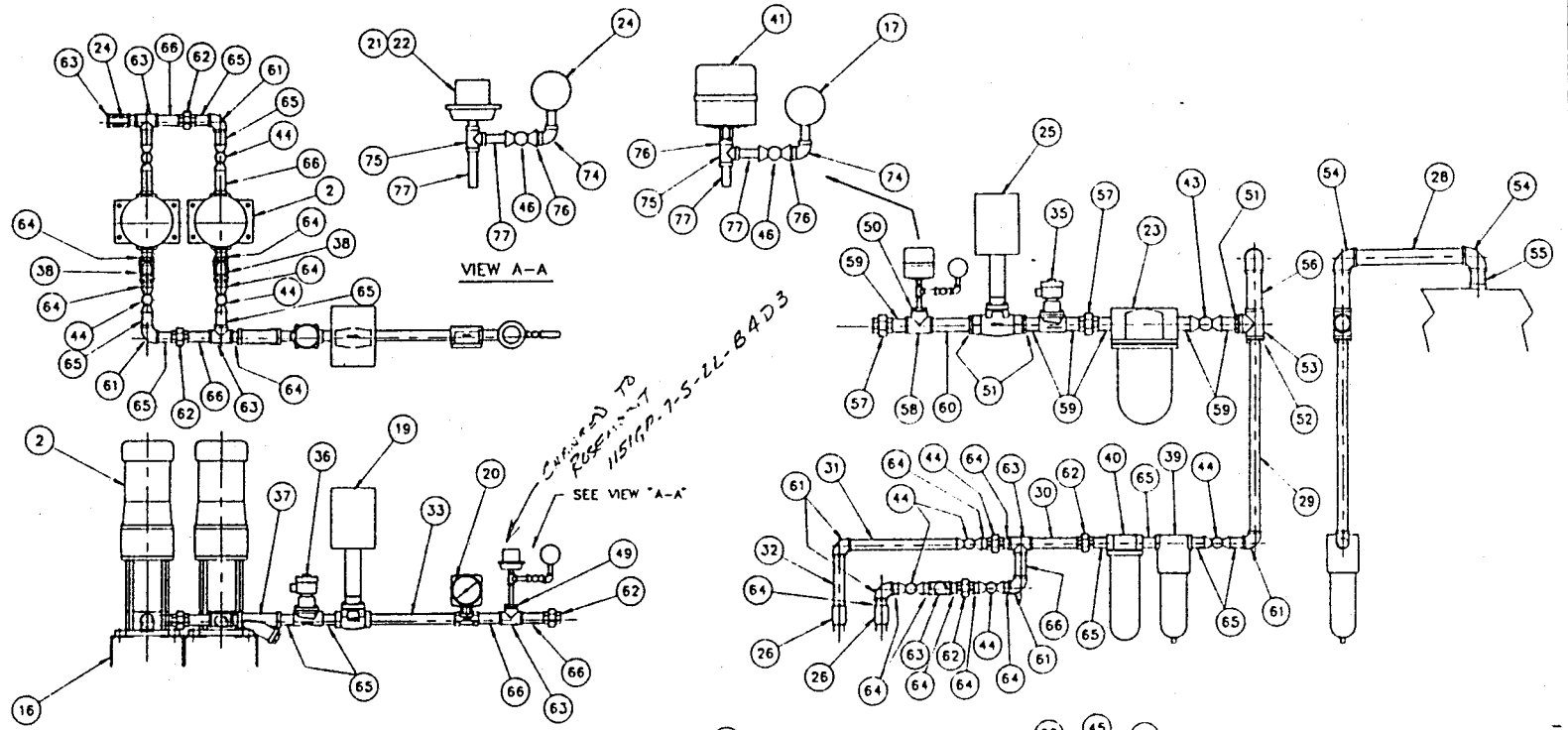

VIEW A-A

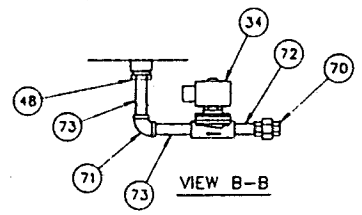

VIEW B-B

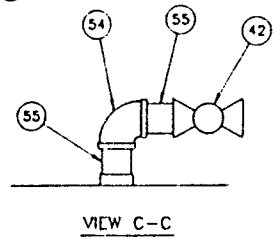

VIEW C-C

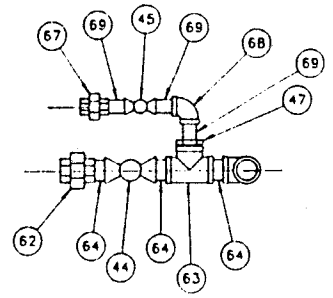

VIEW D-D

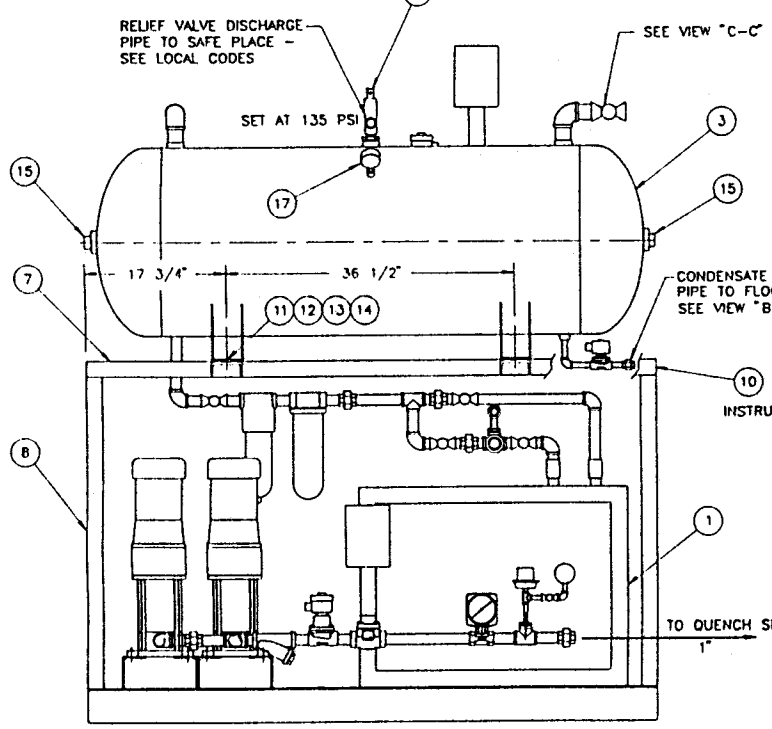

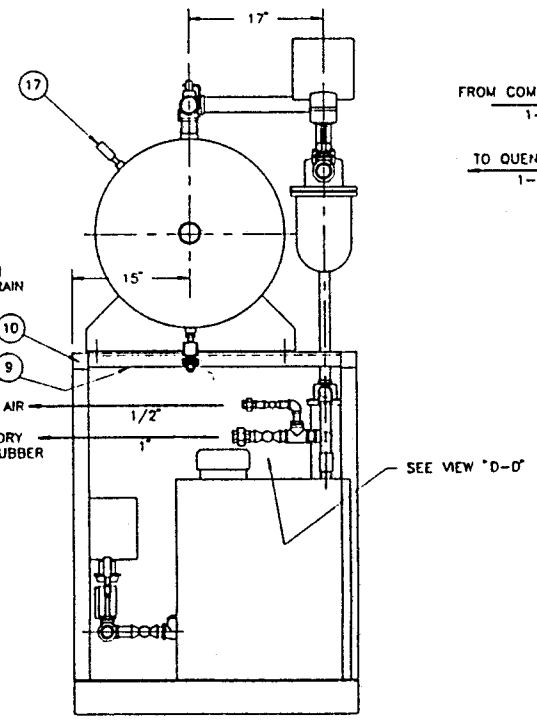

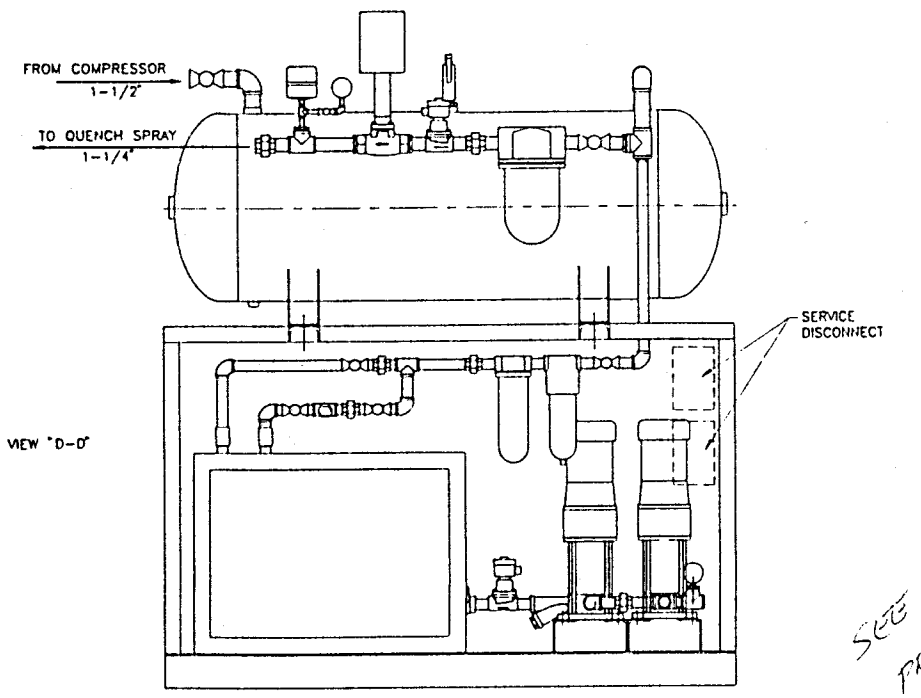

SEE C-034-0004 PRESS TRANS DETAIL 9/4/95

WT: 1200#

PARTS LIST

QTY	ITM	PART NUMBER	DESCRIPTION	CUT	FROM
1	1	84001975	HANKISON DRYER HPR50 230/1/60		
2	2	11007010	GOULD ISVA-1E5D0 1HP		
1	3	11000233	120 GAL AIR RECEIVER #A10033 24 X 69		
2	4	D-034-0042 P04	C4 X 5.4 X 71 5/8	0.298	01004045
1	5	D-034-0042 P05	C4 X 5.4 X 35 5/8	0.148	01004045
1	6	D-034-0042 P06	1/4 PL 36 X 72	0.563	01000315
2	7	D-034-0042 P07	2 X 1/4 WALL SQ TUBE X 72	0.300	01007304
4	8	D-034-0042 P08	2 X 1/4 WALL SQ TUBE X 39	0.163	01007304
2	9	D-034-0042 P09	C4 X 5.4 X 32	0.133	01004045
4	10	D-034-0042 P10	3/16 PL 1 1/2 X 1 1/2	0.001	01000266
4	11	09001702	5/8-11 X 1 1/2 HEX HEAD BOLT		
4	12	09004316	5/8-11 HEX NUT		
4	13	09004907	5/8 FLAT WASHER		
4	14	09005007	5/8 LOCK WASHER		
2	15	17000908	2 IN NPT C1 CL-125 PLUG		
4	16	D-034-0042 P16	L4 X 3 X 1/4 X 8	0.033	01003078
2	17	20004010	ASCFT 10095 0-200PSI 3-1/2 DIAL		
1	18	10009916	CONSOLIDATED 1543 1/2 SAFETY VLV		
1	19	10002002	MV MODEL 1406 CONT VALVE 1"		
1	20	06008962	RCH 1"-7)-R-15-VX FLOW METER		
1	21	10001160	ASCO #SB11D SWITCH		
1	22	10001214	PRESS.TRANSDUCER UNIT ASCO #TE10A21		
1	23	11004182	VILKERSON F42-08-FMD FILT		
2	24	20004014	ASCFT 10095 0-160 PSI 3-1/2 GA		
1	25	10002003	MV MODEL 1406 CONT VALVE 1-1/2"		
2	26	17000747	1 IN NPT STEEL COUPLING		
REF	27		(NOT USED)		
1	28	D-034-0042 P28	1 1/2 SCH 40 PIPE X 14 1/2	1.21	01005024
1	29	D-034-0042 P29	1 SCH 40 PIPE X 25 7/8	2.16	01005016
1	30	D-034-0042 P30	1 SCH 40 PIPE X 7 1/16	0.59	01005016
1	31	D-034-0042 P31	1 SCH 40 PIPE X 14 3/4	1.23	01005016
1	32	D-034-0042 P32	1 SCH 40 PIPE X 7 5/8	0.64	01005016
1	33	D-034-0042 P33	1 SCH 40 PIPE X 12	1.00	01005016
1	34	10000198	ASCO 2-WAY SOLENOID 8210G6 NC		
1	35	10000228	ASCO 2-WAY SOLENOID #8210B55 NC		
1	36	10000227	ASCL 2-WAY SOLENOID #8210B27 NC		
1	37	10000889	1" STRAINER, Y TYPE, CI 20 MESH S/S		
2	38	10005149	1" CHECK VALVE, CL-125 BRONZE 200# VTG		
1	39	11004126	VILKERSON FILTER M31-08-M00		
1	40	11004125	VILKERSON FILTER F34-08-M00		
1	41	07009015	SQ. D PRESSURE SWITCH 9013-GHG-2 J30		
1	42	10005264	1-1/2" BALL VALVE 150# VTG		
1	43	10005263	1-1/4" BALL VALVE 150# VTG		
9	44	10005262	1" BALL VALVE 150# VTG		
1	45	10005361	1/2" BALL VALVE 150# VTG		
2	46	10005275	1/4" BALL VALVE 150# VTG		
1	47	17000941	1 X 1/2 HEX BUSHING CL-125 C1		
1	48	17000935	3/4 X 3/8 HEX BUSHING CL-125 C1		
1	49	17000943	1 X 1/4 HEX BUSHING CL-125 C1		
1	50	17000949	1-1/4 X 1/4 HEX BUSHING CL-125 C1		
3	51	17000950	1-1/2 X 1-1/4 HEX BUSHING CL-125 C1		
1	52	17000951	1-1/2 X 1 HEX BUSHING CL-125 C1		
1	53	17000594	1-1/2 NPT MI CL-150 TEE		
3	54	17000508	1-1/2 NPT MI 90 DEG ELL CL-150		
3	55	17000130	1-1/2 X 3 NIPPLE SCH 40		
1	56	17000136	1-1/2 X 6 NIPPLE SCH 40		
2	57	17000876	1-1/4 NPT MI CL-150 UNION		
1	58	17000593	1-1/4 NPT MI CL-150 TEE		
6	59	17000114	1-1/4 X 3 NIPPLE SCH 40		
1	60	17000120	1-1/4 X 6 NIPPLE SCH 40		
6	61	17000506	1 NPT MI 90 DEG ELL CL-150		
7	62	17000875	1 NPT MI CL-150 UNION		
7	63	17000592	1 NPT MI CL-150 TEE		
17	64	17000095	1 X 2 NIPPLE SCH 40		
12	65	17000097	1 X 3 NIPPLE SCH 40		
7	66	17000099	1 X 4 NIPPLE SCH 40		
1	67	17000873	1/2 NPT MI CL-150 UNION		
1	68	17000504	1/2 NPT MI 90 DEG ELL CL-150		
3	69	17000059	1/2 X 2 NIPPLE SCH 40		
1	70	17000872	3/8 NPT MI CL-150 UNION		
1	71	17000503	3/8 NPT MI CL-150 90 DEG ELL		
1	72	17000040	3/8 X 2 NIPPLE SCH 40		
2	73	17000042	3/8 X 3 NIPPLE SCH 40		
2	74	17000502	1/4 NPT MI 90 DEG ELL CL-150		
2	75	17000588	1/4 NPT MI CL-150 TEE		
3	76	17000019	1/4 X CLOSE NIPPLE SCH 40		
3	77	17000021	1/4 X 2 NIPPLE SCH 40		
1	78	17000023	1/4 X 3 NIPPLE SCH 40		

THIS DRAWING IS THE PROPERTY OF CONSUMAT SYSTEMS, INC. AND IS TO BE USED ONLY FOR PURPOSES ITEMS ON ORDER FOR CONSUMAT SYSTEMS, INC. SUBJECT TO RETURN UPON DEMAND AND IS NOT TO BE PRINTED, PHOTOGRAPHED, COPIED, REPRODUCED, LOANED OR USED IN ANY WAY WITHOUT WRITTEN PERMISSION OF CONSUMAT SYSTEMS, INC.

DR	DCK	DATE 6-15-94
CHK		DATE
APP		DATE
APP		DATE
ARCHIVE		PROJ NO. P5185

CONSUMAT SYSTEMS, INC.
RICHMOND, VA. U.S.A.

TITLE
AIR / WATER SKID ASSEMBLY
DRY SCRUBBER SYSTEM

MDT HIGHER ASSY

DO NOT SCALE

SCALE 1" = 1"

REFERENCE

DWG NO. D-034-0042

SHEET 1 OF 1

REV

REV	REVISION	DATE	DR	CHK	APP	APP
C						
B						
A						
F						
E						
D						
I						
H						
G						

PARTS LIST

QTY	BM	PART NUMBER	DESCRIPTION	CUT FROM	
1	1	20002165	ROSEMOUNT 1151GP-7-S-22-B4D3 PRESS TRANS		
2	2	17000021	1/4 X 2 NIPPLE SCH 40		
2	3	17000502	1/4 NPT MI 90 DEG ELL CL-150		
2	4	17000025	1/4 X 4 NIPPLE SCH 40		
1	5	17000871	1/4 NPT MI CL-150 UNION		
1	6	C-034-0044 P06	2 SCH 40 PIPE X 24	2.00	01005032
1	7	C-034-0044 P07	12 GA 2 1/8 X 2 1/8 (2-1/8" DIA)	0.001	01000125

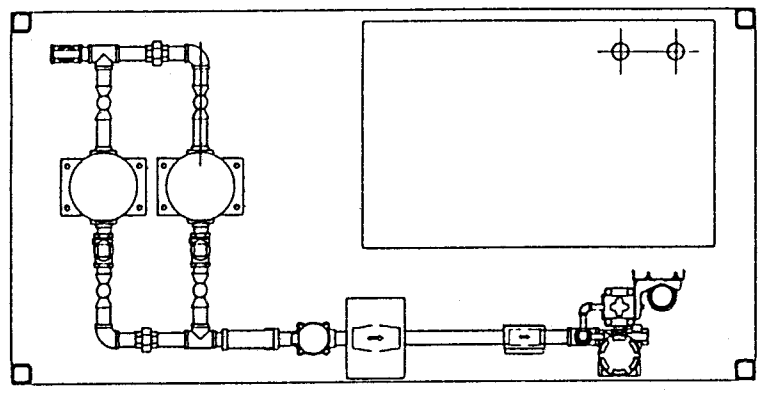

SECTION "A-A"

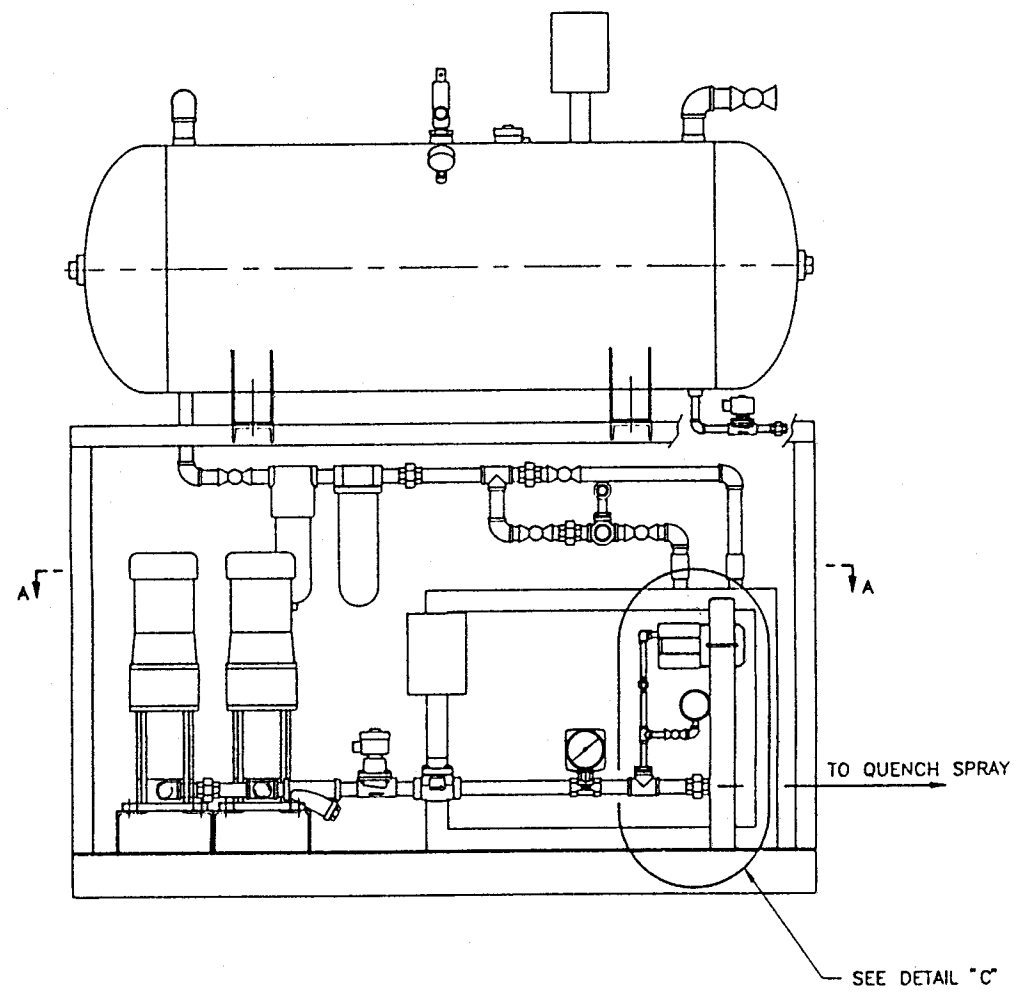

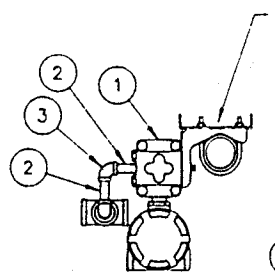

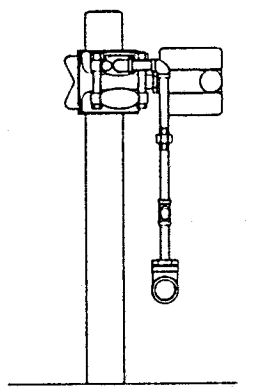

SECTION "B-B"

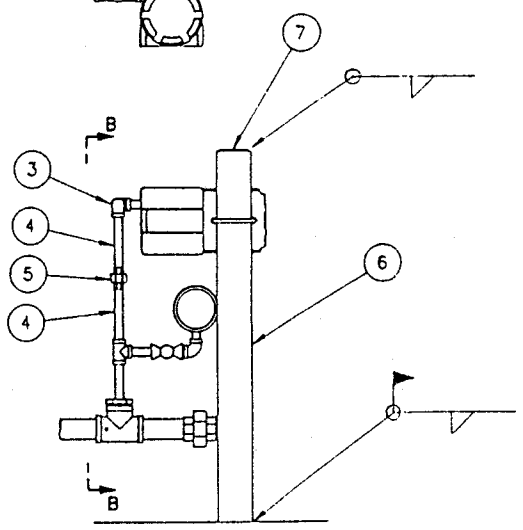

DETAIL "C"

THIS DRAWING IS THE PROPERTY OF CONSUMAT SYSTEMS, INC. AND IS TO BE USED ONLY FOR PRODUCING ITEMS ON ORDER FOR CONSUMAT SYSTEMS, INC. SUBJECT TO RETURN UPON DEMAND AND IS NOT TO BE PRINTED, PHOTOGRAPHED, COPIED, REPRODUCED, LOANED OR USED IN ANY WAY WITHOUT WRITTEN PERMISSION OF CONSUMAT SYSTEMS, INC.

DR DEK	DATE 9-7-95	CONSUMAT SYSTEMS, INC. RICHMOND, VA. U.S.A.	
CHK	DATE		
APP	DATE	TITLE PRESSURE TRANSMITTER RETROFIT AIR / WATER SKID	
APP	DATE		
ARCHIVE	PROJ NO. P5188		
NEXT HIGHER ASSY		SCALE 1"=1'	DWG. NO. C-034-0044
DO NOT SCALE		REFERENCE D-034-0042	SHEET 1 OF 1

REV. —

REV	REVISION	DATE	DR	CHK	APP	APP
C						
B						
A						

REV	REVISION	DATE	DR	CHK	APP	APP
F						
E						
D						

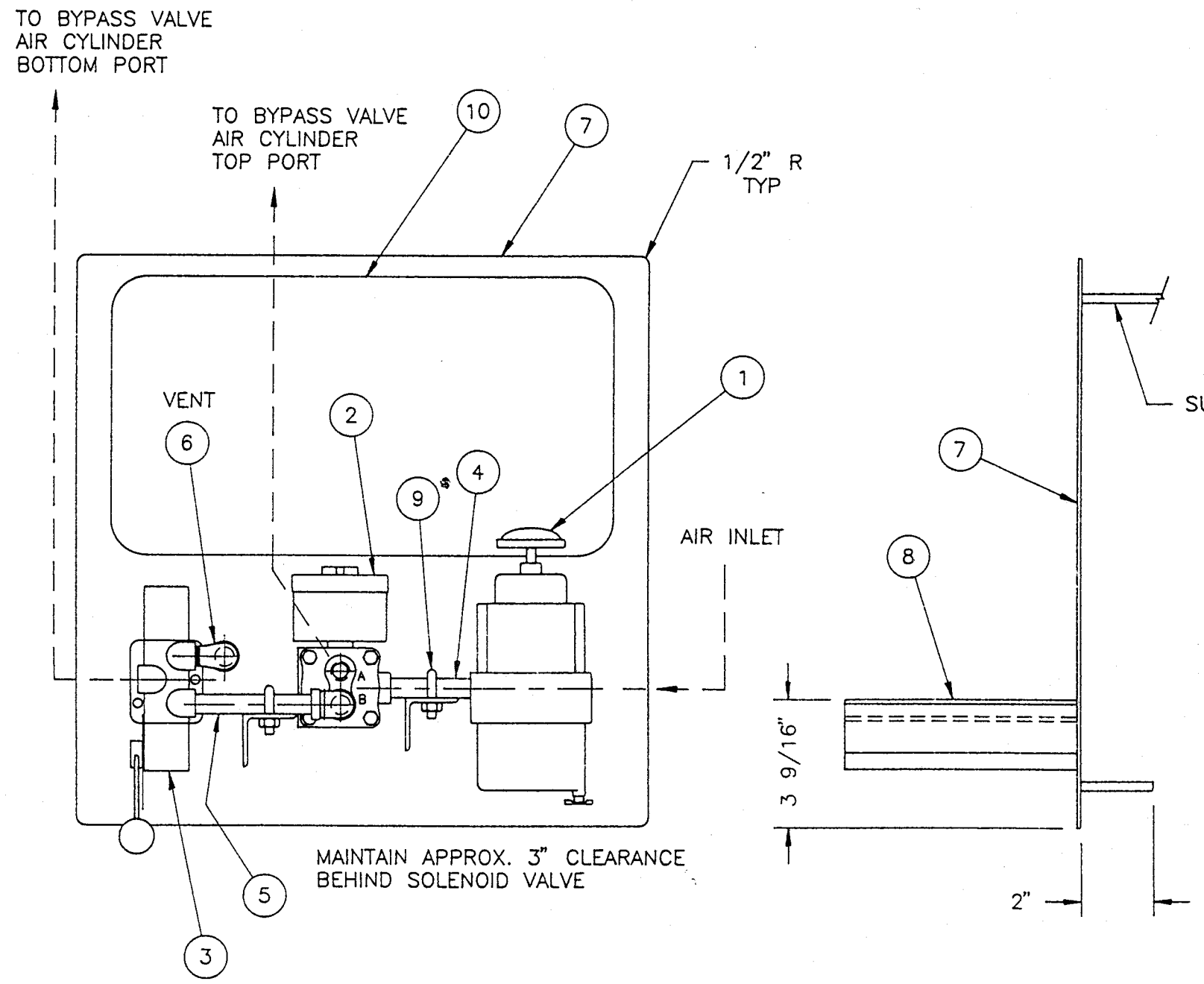

PARTS LIST

QTY	BM	PART NUMBER	DESCRIPTION	CUT FROM	
1	1	10002016	HW F/R AIRSET #30746588-002		
1	2	10000708	ASCO SOLENOID VALVE #8342C1-MS		
1	3	10003550	VERSA 2-WAY DIVERTER #VZH-7302		
1	4	17000023	1/4 X 3 NIPPLE SCH 40		
1	5	17000025	1/4 X 4 NIPPLE SCH 40		
2	6	17000532	1/4 NPT MI CL-150 90 DEG STREET ELL		
1	7	B-34C-0093 P07	12 GA 16 X 16	0.056	01000125
2	8	B-34C-0093 P08	L1 1/2 X 1 1/2 X 3/16 X 6 1/2	0.027	01003016
2	9	09000100	#302 U-BOLT 3/8 INCH PIPE		
1	10	C-34C-0097	INSTRUCTION DECAL D1803		

REV	REVISION	DATE	DR	CHK	APP	APP
C						
B	ADD DECAL INFO	8-17-95	DEK			
A	REMOVE GROUPS & AIR CYL.	7-11-94	DEK			

THIS DRAWING IS THE PROPERTY OF CONSUMAT SYSTEMS, INC. AND IS TO BE USED ONLY FOR PRODUCING ITEMS ON ORDER FOR CONSUMAT SYSTEMS, INC. SUBJECT TO RETURN UPON DEMAND AND IS NOT TO BE PRINTED, PHOTOGRAPHED, COPIED, REPRODUCED, LOANED OR USED IN ANY WAY WITHOUT WRITTEN PERMISSION OF CONSUMAT SYSTEMS, INC.

DR	DATE
DEK	6-27-94
CHK	DATE
APP	DATE
APP	DATE
ARCHIVE	PROJ NO. STD

CONSUMAT SYSTEMS, INC.
RICHMOND, VA. U.S.A.

TITLE
CONTROL PIPING ASSEMBLY BYPASS VALVE REMOTE STATION

NEXT HIGHER ASSY	SCALE 3" = 1'	DWG. NO. B-34C-0093	REV. B
DO NOT SCALE	REFERENCE	SHEET 1 OF 1	

PARTS LIST					
QTY	BM	PART NUMBER	DESCRIPTION	CUT	FROM
2	1	D-34C-0094 P01	3/8 OD X 035 WALL STL.TU. X 72 LG.	6	14005102
6	2	09000001	H/Z)00037 3/8 HYD. TUBING CLAMP		
4	3	14005010	AEROQUIP FJ 9122-0606S HOSE FITTING		
1	4	D-34C-0094 P04	AEROQUIP FC-410-06 HYD. HOSE X 36 LG.	3	14005050
1	5	D-34C-0094 P05	AEROQUIP FC-410-06 HYD. HOSE X 24 LG.	2	14005050
1	6	14006620	SVAGELOK S-600-2-6		
5	7	14006736	SVAGELOK S-600-6-6AN		
1	8	14001002	FLODAR AC-1000-6-8		
1	9	14001202	FLODAR AC-2000-6-8		
1	10	14001106	FLODAR AC-1100-6-6		
3	11	D-34C-0094 P11	UNISTRUT X 2-1/2" LG HZ-121048	.053	09000018
1	12	D-34C-0094 P12	L1 1/2 X 1 1/2 X 1/8 X 3	0.013	01003011

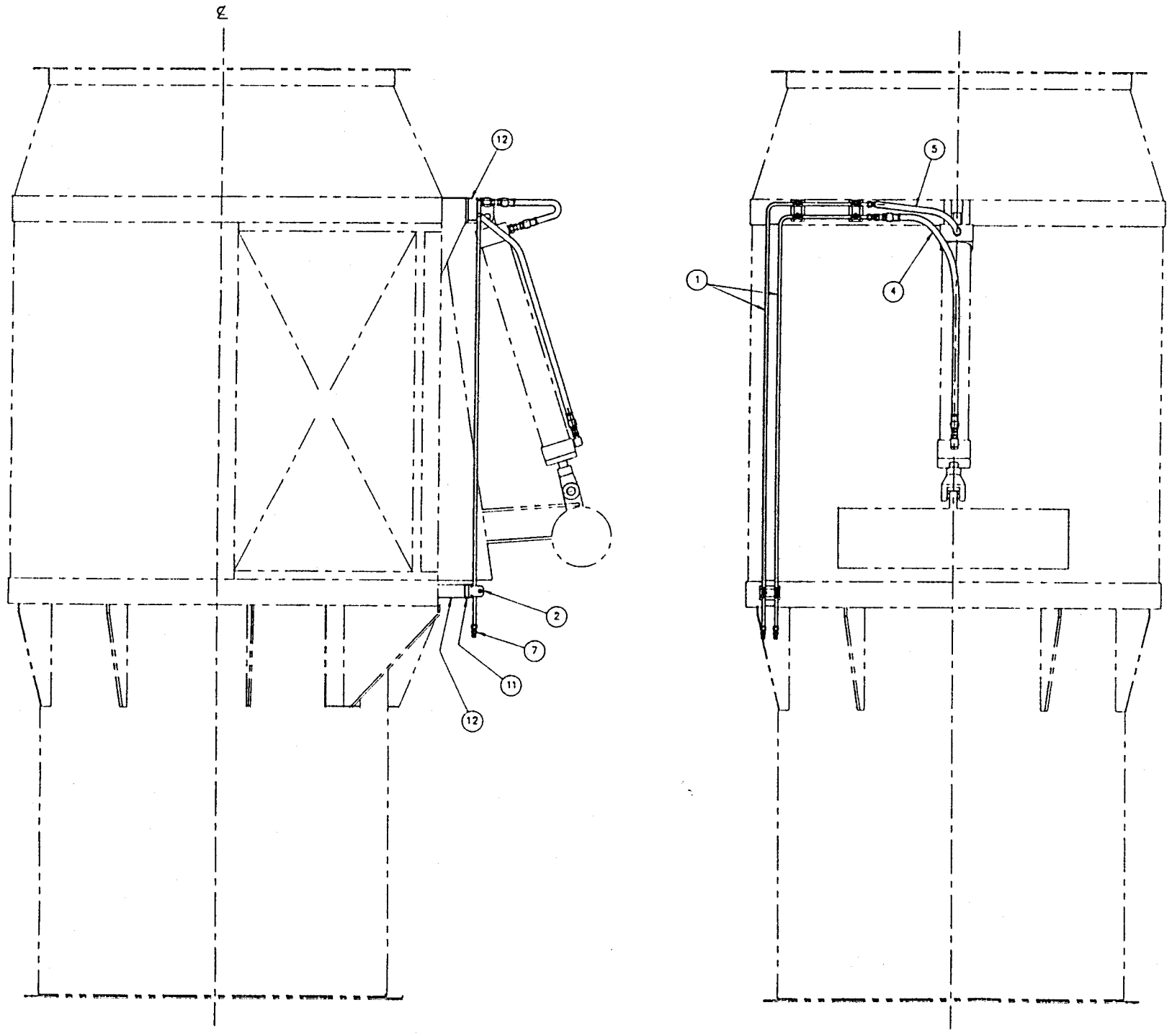

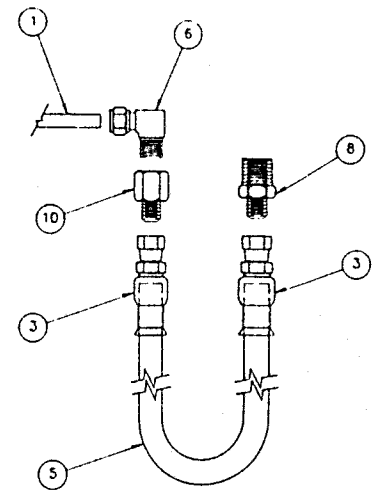

TOP HOSE ASSEMBLY

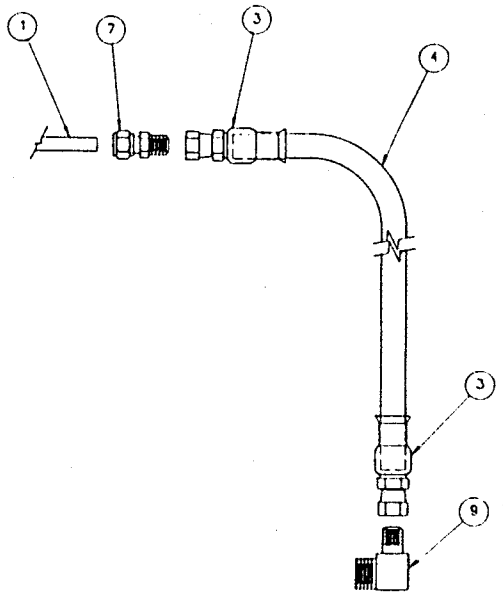

BOTTOM HOSE ASSEMBLY

FOR 3¼", 4" & 5" AIR CYLINDERS

THIS DRAWING IS THE PROPERTY OF CONSUMAT SYSTEMS, INC. AND IS TO BE USED ONLY FOR FURNISHING ITEMS ON ORDER FOR CONSUMAT SYSTEMS, INC. SUBJECT TO RETURN UPON DEMAND AND IS NOT TO BE PRINTED, PHOTOGRAPHED, COPIED, REPRODUCED, LOANED OR USED IN ANY WAY WITHOUT WRITTEN PERMISSION OF CONSUMAT SYSTEMS, INC.

DR DEK	DATE 7-7-94
CHK	DATE
APP	DATE
APP	DATE
ARCHIVE	PROJ NO. STD
NEXT HIGHER ASSY	
DO NOT SCALE	

CONSUMAT SYSTEMS, INC.
RICHMOND, VA. U.S.A.

TITLE
PNEUMATIC PIPING
BYPASS VALVE CYLINDER
TYPICAL

SCALE	DWG. NO.	REV.
1 1/2" = 1'	D-34C-0094	
REFERENCE	SHEET 1 OF 1	

REV	REVISION	DATE	DR	CHK	APP	APP
C						
B						
A						

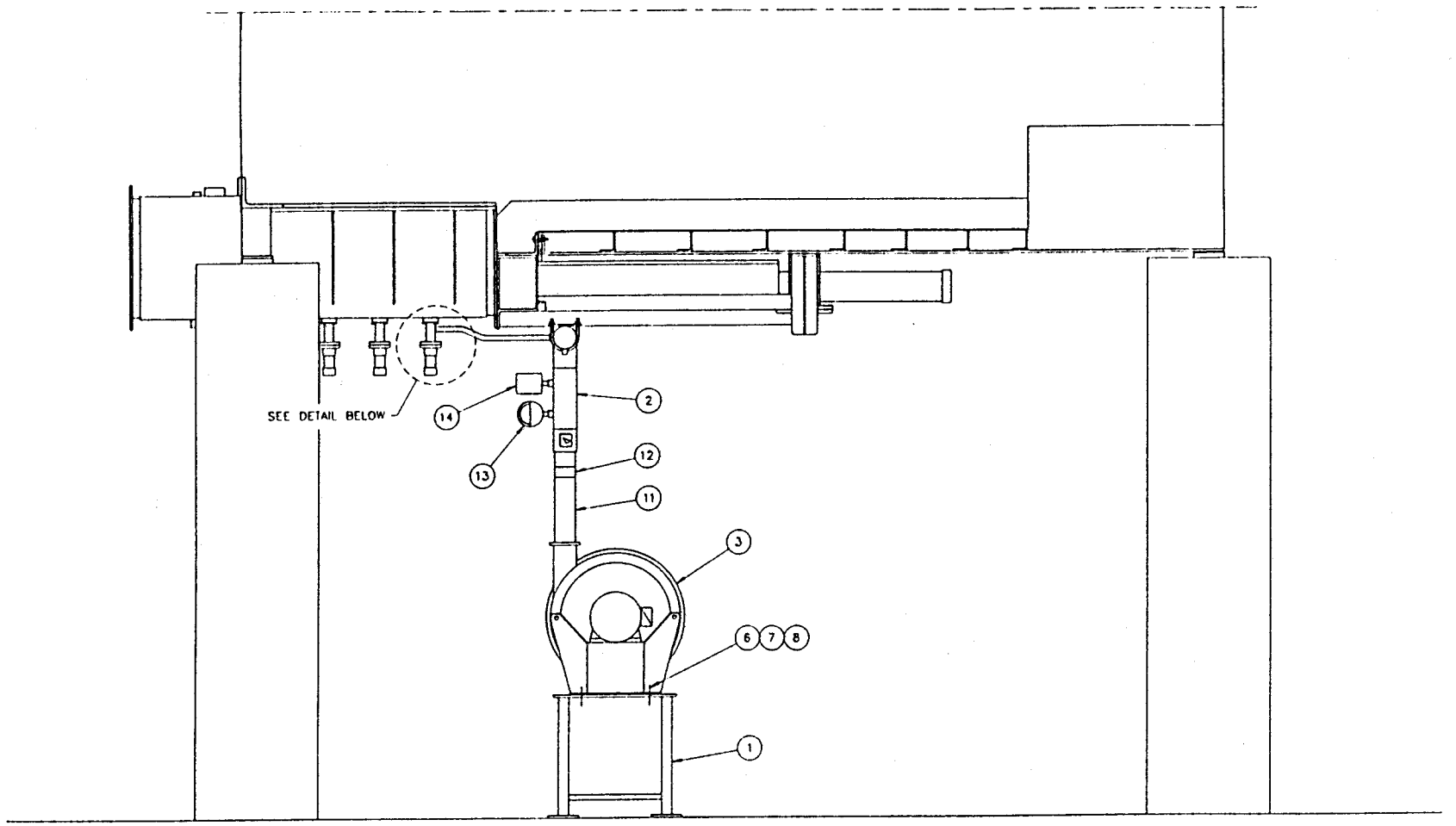

PARTS LIST

QTY	ITM	PART NUMBER	DESCRIPTION	CUT	FROM
1	1	C-20C-0017	BLOWER MOUNT		
1	2	C-20C-0030	SUPPLY HEADER		
REF	3	04000033	N.A. 2310-19/1-11D FAN, 1 HP		
2	4	09000108	U-BOLT FOR 4" PIPE W/NUTS		
4	5	09005005	1/2 LOCK WASHER		
3	6	09001705	5/8-11 X 2 HEX HEAD BOLT		
3	7	09004316	5/8-11 HEX NUT		
3	8	09005007	5/8 LOCK WASHER		
34	9	05008200	1 IN AIR HOSE 70 PSI (FT)		
24	10	09000054	QS100M24H HOSE CLAMP 1-1/16		
1	11	D-20C-0029 P11	4" OD S/S FLEX TUBE X 18	1.50	01005364
2	12	29001552	4 IN DRAV BAND X 4 IN		
REF	13	08002032	MANOMETER		
REF	14	06000646	PRESSURE SWITCH		
REF	15	12001499	SHEFFER 1 1/2"BORE IV CYLINDER		
12	16	D-020-0214	AIR INJECTOR NOZZLE		
48	17	09001205	5/16-18 X 1 HEX HEAD BOLT		

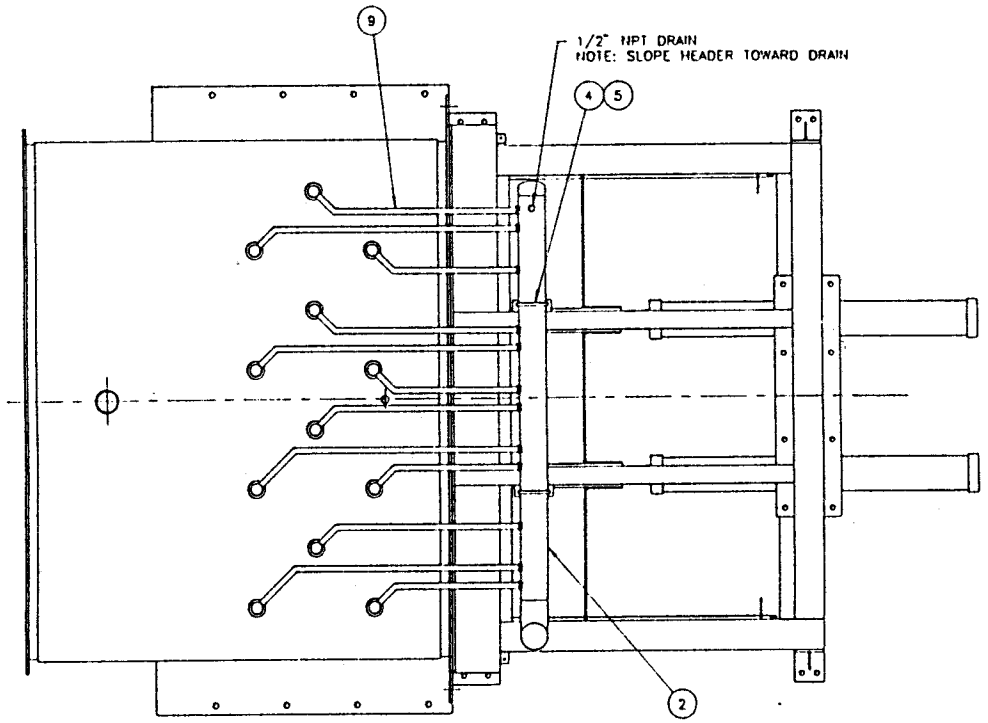

BOTTOM VIEW OF ASH SUMP AREA

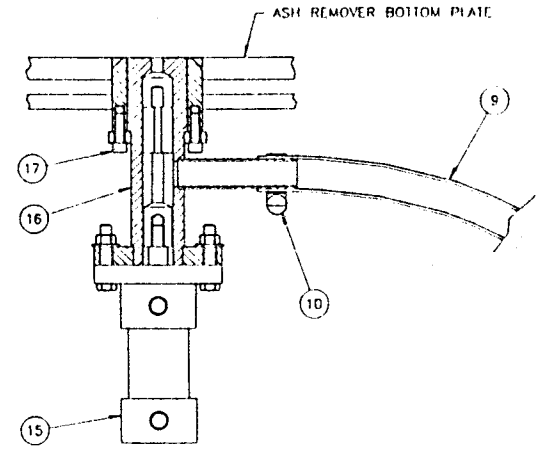

AIR INJECTOR ASSEMBLY DETAIL

THIS DRAWING IS THE PROPERTY OF CONSUMAT SYSTEMS, INC AND IS TO BE USED ONLY FOR PURPOSES AS MAY BE AGREED FOR CONSUMAT SYSTEMS, INC. SUBJECT TO RETURN UPON DEMAND AND IS NOT TO BE COPIED, PHOTOGRAPHED, TRACED, REPRODUCED, LOANED OR USED IN ANY WAY WITHOUT WRITTEN PERMISSION OF CONSUMAT SYSTEMS, INC

DR BLJ	DATE 6/27/94	CONSUMAT SYSTEMS, INC. RICHMOND, VA. U.S.A.	
CHK	DATE		
APP	DATE	TITLE ASH SUMP AIR SYSTEM CS-760/AR4284	
APP	DATE		
ARCHIVE	PROJ NO. P5185		
NEXT HIGHER ASSY		SCALE 3/4" = 1'	DWG NO. D-20C-0029
DO NOT SCALE		REFERENCE	SHEET OF

REV: C, B, A — REVISION | DATE | DR | CHK | APP | APP | REV: F, E, D

REV: I, H, G — REVISION | DATE | DR | CHK | APP | APP

INCINERATOR COOLING WATER CONTROL

COOLING WATER FAN

COOLING FAN CONTROL TEMP. SWITCH

COOLING WATER SKID

460 VAC 3 PHASE 15 AMPS [E2]

PREHEAT FAN MOTOR

PREHEAT HEATER

ID FAN

QUENCH WATER BOOSTER PUMP

SCRUBBER MOTOR STARTER ENCLOSURE

INCINERATOR/ SCRUBBER CONTROL ENCLOSURE

INCINERATOR MOTOR STARTER ENCLOSURE

SS CONDITIONL DRUM MOTOR

CONDITIONL DRUM HEATERS(2)

SS RECIR. CONV. MOTOR

RECIR. HEATERS(2)

HEAT EXCH. CONV. HEATERS(3)

SS FABRIC FIL. HOPPER CONV. MOTOR

FABRIC FIL. CONV. HEATERS(2)

SS ASH DISCHGE RDT. FEEDER MOTOR

FABRIC FIL. HOPPER HEATERS(4)

HOPPER HIGH LEVEL

ASH TRANS. CONVEYOR C.S.I. REMOTE

SS ASH TRANS. CONVEYOR MOTOR

DILUTION AIR DAMPER

FABRIC FIL. VIB.CLN.PUL. PURGE SOLENOIDS COMP.AIR LOW

LCP #3 REMOTE

LCP #2 REMOTE

[E5] 460 VAC 3 PHASE 25 AMPS

LIME FEED SYSTEM

10 FOOT MAX. [DISC BY C.S.I.] 460 VAC 3Ø 60HZ 500 AMPS GRD [E3]

10 FOOT MAX. [DISC BY C.S.I.] 230 VAC 1Ø 60HZ 50 AMPS GRD [E6]

HEAT EXCH. SCREW CONV. MOTOR SS

HEAT EXCH. COOLING FANS QTY.10

HEAT EXCH. CLEANING MECH. MOTOR SS

HEAT EX. INLET
HEAT EX. EXIT
ID FAN INLET
BGH DIFF. PRES

LCP #1 REMOTE

[E4] 460 VAC 3 PHASE 60 HERZ 100 AMPS — Conduit Size 1 1/4" — 60 H.P. AIR COMPRESSOR

[E7] 230 VAC 1 PHASE 60 HERZ 10 AMPS — Conduit Size 1/2" — 3/4 H.P. AIR DRYER — CONTROL COND. #30

[E8] 230 VAC 1 PHASE 60 HERZ 40 AMPS — Conduit Size 1" — C.E.M.

TO PIC./SCRUB CONTROL ENCL.

I.D. FAN CONTROL J.B.

QUENCH WATER CONTROL J.B.

BYPASS VALVE CONTROL

LOADER PENDANT STATION

ASH COND. P.P. STATION

ASH COND. HYD. PUMP

ASH EJECTOR REMOTE

SCRUB. ISO VALVES L.S.L.S.

PREHEAT ISO VALVES L.S.L.S.L.S.L.S.

LOWER CHAMBER CONTROL JB

LOADER CONTROL JB

GAS FLOW OIL FLOW

MAIN HYD. J.B.

CHART REC. U/C #2 L/C

CHART REC. BGH INLET ID INLET

TO CUSTOMERS OIL TANK LEVEL SENSOR

ASH SUMP BLOWER

LOWER CHAMBER POWER JB

LOADER POWER JB

460 VAC 3Ø 60HZ 150 AMPS GRD [E1]

ALL WIRE TYPE THHN STRANDED EXCEPT

"J" WIRE = B/W #303WZD4

"K" WIRE = B/W #9R2C2

RUN THERMOCOUPLE WIRES IN SEPERATE CONDUIT, DIRECTLY TO APPLICABLE TRANSMITTER.

DISCONNECTS ARE PROVIDED, TO BE MOUNTED LOCALLY, FOR ALL MOTORS AND HEATERS.

CONDUIT #3 HAS BEEN DELETED. (FACTORY WIRED)

[ ] REF. D-01-0691

[SS] SPEED SWITCH

REF. D-50-4443 SH.2,4

REV	REVISION	DATE	DR	CHK	APP	AP
G	DELETE DUPLICATE	4-21-95	B.W.B.			
F	COND.#46 ADDED, CONV.HYD.J.B.	3-24-95	B.W.B.			
E	NOTE,COND.45,2 & GEN. UPDATE.	3-08-95	B.W.B.			
D	C.S.I. DISCONNECTS SHOWN	1-30-95	B.W.B.			
C	UPDATE PER SCHEMATIC	12-05-94	B.W.B.			
B	ESTIMATE NUMBER OF WIRES	10-01-93	B.W.B.			
A	COND.#,29,30,31	9-23-93	B.W.B.			

DO NOT SCALE

DR B.W.B. DATE 6-18-93
CHK B.W.B. DATE
APP — DATE
APP — DATE

P5185 PROJ. NO. — BURROUGHS WELLCOME PROJ. NAME

Consumat Systems, Inc. RICHMOND, VA. U.S.A.

TITLE: CONDUIT SIZES WITH INTERCONNECT CONDUITS

SCALE None — REFERENCE 41712 — SIZE D — DWG. NO. 50-4241 SHEET 1 OF 2 — REV. G

COND.	SIZE	CIRCUITS	WIRE SIZE ※	COLOR
1	3/4"	GR.	#12	GREEN
		102T1,102T2,102T3		BLACK
		1011,1012		
2	1/2"	1001,1011	#16	RED
5	3/4"	GR.	#12	GREEN
		L1,L2,L3		BLACK
6	1 1/2"	GR.	#8	GREEN
		27T1,27T2,27T3,28T1,28T2,28T3,29T1,29T2,29T3,31T1,31T2,31T3, 40T1,40T2,41T1,41T2,42T1,42T2,43T1,43T2,44T1,44T2,45T1,45T2, 46T1,46T2,47T1,47T2,48T1,48T2,49T1,49T2,50T1,50T2,51T1,51T2, 52T1,52T2, & 6 SPARES.	#12	BLACK
		2	#14	WHITE
		25,427,428,429,430,443,444,446,459,460,461,481,482 & 4 SPARES	#16	RED
7	3/4"	GR.	#12	GREEN
		30T1,30T2,30T3		BLACK
		25,431, & 3 SPARES	#16	RED
8	1/2"	2	#16	WHITE
		25,437,438,474,539,540,541		RED
9	1 1/2"	2	#14	WHITE
		25,103 417,418,419,420,421,422,445, 481,482,491,492,493,494,495,496, 507,508,509,510,511,512, 523,524,525,526,527,528, & 6 SPARES	#16	RED
10	3/4"	GR.	#10	GREEN
		460V L1,L2,L3		BLACK
11	1 1/4"	GR.	#12	GREEN
		N (LIME SYSTEM NEUTRAL FROM 120V/1 PH. CONTROL POWER)	#14	WHITE
		25,368,369,370,371,372,441,442 & 6 SPARES	#16	RED
		H (LIME SYSTEM HOT FROM 120V/1 PH. CONTROL POWER)	#14	RED
		3 SPARES	SHIELDED PAIRS	
12	3/4"	2	#14	WHITE
		1001,1004,1005,1008,1009,1014,1015,1016,1017,1018,1019, & 4 SPARES.	#16	RED
13	2"	2,2,2	#14	WHITE
		14,17,20,41,42,45,46,48,49,50,51,52,53,54,57,58,59, 60,61,62,63,64,65,66,69,70,71,72,73,74,75,76,77,79,80,81,82,83,84, 85,86,89,90,91,92,93,94,204,228,229,230,241,242,243,258,259,270,271, 288,289,291,292,295,296,304,305,306,307,320,332, & 10 SPARES.	#16	RED
		31/32/SH,34/35/SH,36/37/SH, 702/703/SH,704/705/SH,706/707/SH,710/711/SH,714/715/SH, 766/767/SH,771/772/SH, & 3 SPARES.	SHIELDED PAIRS	
14	3/4"	2	#14	WHITE
		17,231,252,253,255,262,263,284,295,308,309,312,313,316,317,321, 324,325,328,329, & 4 SPARES	#16	RED
15	3/4"	808/809/SH,813/814/SH	SHIELDED PAIRS	
16	1/2"	14,375	#16	RED
17	1/2"	5T1,5T2,5T3	#12	BLACK
18	1"	GR.	#4	GREEN
		1T1,1T2,1T3,4T1,4T2,4T3,	#10	BLACK
		3T1,3T2,3T3,5T1,5T2,5T3,7T1,7T2,7T3	#12	
19	1/2"	GR.	#8	GREEN
		2T1,2T2,2T3	#8	
20	1 1/2"	2,2,2	#14	WHITE
		4,5,6,7,10,12,14,17,20,22,23,25,50,55,56,59,67,68,71,77A,78,80,87, 88,201,210,211,225,226,227,239,240,249,250,251,256,257,260,261,267, 268,269,274,279,280,283,286,300,301,302,303, 308,309,310,311,312,313,314,315,316,317,318,319,322,323,326,327, 330,331,333,360,361,362,363,364,365,366,367, & 10 SPARES.	#16	RED
21	1 1/2"	GR.	#1/0	GREEN
		460V L1,L2,L3		BLACK
22	3/4"	GR.	#12	GREEN
		6T1,6T2,6T3		BLACK
23	1/2"	2	#16	WHITE
		25,454,455,456,457,489		RED
24	1/2"	2		WHITE
		25,452,453,488		RED
25	1/2"	2	#14	WHITE
		226,227,228,229,324,325,332, & 4 SPARES.	#16	RED
26	1/2"	2	#14	WHITE
		23,233,238,334,335,340,341,343,344, & 2 SPARES	#16	RED
27	3/4"	2	#14	WHITE
		22,23,233,234,235,236,237,238,334,335,340,341,343,344,345,346, & 6 SPARES	#16	RED
28	1/2"	17,250,251		
29	1/2"	25,433,434 & 4 SPARES.		
30	1 1/4"	2	#14	WHITE
		25,388,389,435,477,478, & 3 SPARES	#16	RED
		737/738/SH,745/746/SH,747/748/SH,798/799/SH, & 2 SPARES	SHIELDED PAIRS	
31	1 1/4"	2	#14	WHITE
		25,439,440,483, & 4 SPARES.	#16	RED
		763/764/SH,781/782/SH, & 2 SPARE	SHIELDED PAIRS	
32	1 1/4"	2	#12	WHITE
		103	#12	RED
		25,104,107,108,109,110,111,112,113,114,115,116,117,118,119,122,123,124,125, 126,127,128,129,140,141,142,143,144,145,146,147,148,149,150,151,152, 380,381,382,383,390,391,392,393,394,425,426,427, & 10 SPARES. 428,429,430,431,443,444,446,449,450,458,459,460,461,481,482	#16	
		794/795/SH.		
33	1"	750/751/SH,776/777/SH,786/787/SH,803/804/SH, & 2 SPARES	SHIELDED PAIRS	
34	3/4"	GR.	#4	GREEN
		25,425,426, & 4 SPARES	#16	RED
		13T1,13T2,13T3,14T1,14T2,14T3,15T1,15T2,15T3,16T1,16T2,16T3, 17T1,17T2,17T3,18T1,18T2,18T3,19T1,19T2,19T3,20T1,20T2,20T3, 21T1,21T2,21T3,25T1,25T2,25T3,26T1,26T2,26T3, & 6 SPARES	#12	BLACK
35	3/4"	GR.	#6	GREEN
		230V L1,L2		BLACK
36		GR.	#MCM1000	GREEN
		460V L1,L2,L3		BLACK
37	1/2"	GR.	#12	GREEN
		11T1,11T2,11T3,12T1,12T2,12T3		BLACK
38	2"	FAN GR.	#12	GREEN
		FAN 24T1,24T2,24T3		BLACK
		HEATER GR.	#1/0	GREEN
		HEATER 23T1,23T2,23T3		BLACK
		2	#14	WHITE
		25,449,450,458, & 2 SPARES	#16	RED
39	2"	GR.	#3/0	GREEN
		10T1,10T2,10T3		BLACK
40	3/4"	2	#14	WHITE
		25,447,448, & 2 SPARES	#16	RED
		818/819/SH,823/824/SH.	SHIELDED PAIRS	
41	1/2"	25,384,385,386,436	#16	RED
42	3/4"	25,103,109,110,111,112,113,114,115,116,117,118,123,402,404,405,406,407, 408,409, & 4 SPARES.		
43	3/4"	25,103,122,125,126,127,129,403,410,412,413,414, & 4 SPARES		
44	3/4"	25,103,128,411		
45	1 1/4"	2	#14	WHITE
		25	#16	RED
		727/728/SH,732/733/SH,752/753/SH,778/779/SH	SHIELDED PAIRS	
46	3/4"	7,284,285,231	#16	RED

LCP CIR.#	C.S.I. CIR.#
1	25
2	-
3	402
4	-
5	25
6	-
7	407
8	-
9	25
10	-
11	404
12	-
13	25
14	-
15	408
16	-
17	25
18	-
19	405
20	-
21	25
22	-
23	409
24	-
25	25
26	-
27	406
28	-
29	25
30	417
31	418
32	-
33	25
34	422
35	421
36	-
37	25
38	420
39	419
40	-
41	25
42	-
43	403
44	-
45	25
46	-
47	412
48	-
49	25
50	-
51	413
52	-
53	25
54	-
55	414
56	-
57	25
58	-
59	410
60	-

※ ALL SINGLE CONDUCTOR WIRE IS TYPE THHN STRANDED
SHIELDED PAIRS IS BELDEN #9316

REF. D-01-0691

REV	REVISION	DATE	DR	CHK	APP	AP
H	449,450 CIR.& COND.#9	5/22/95	B.V.B.			
G	ADDED CONTROLS FOR INTEREL HEATERS	5/18/95	B.V.B.			
F	UPDATE	5/12/95	B.V.B.			
E	UPDATE	4/21/95	B.V.B.			
D	COND.#46 ADDED	3/24/95	B.V.B.			
C	COND.#45 ADDED COND.#6 & 23 & 24 REVISED	3/09/95	B.V.B.			
B	COND.#8 539,540,541 ADDED	2/09/95	B.V.B.			
A	UPDATE PER SCHEMATIC	12/05/94	B.V.B.			

DR B.W.B. DATE 11-11-94 CHK B.W.B. DATE - APP - APP - DO NOT SCALE

P5185 PROJ NO. BURROUGHS WELLCOME PROJ NAME

Consunat Systems, Inc.
RICHMOND, VA. U.S.A.

TITLE CONDUIT SIZES WITH INTERCONNECT CONDUITS

SCALE None REFERENCE SIZE D DWG. NO. 50-4241 REV. H
SHEET 2 OF 2

02	01	ITEM	PART	DESCRIPTION
	1	1	MDS	C-H #C361GF1264 DISCONNECT SW.
	3	2	M1,M2,M4	C-H #A10DN1A SIZE 2 STARTER
	4	3	M3,M5,M6,M7	C-H #A10CH1A SIZE 1 STARTER
	7	3	DISC #1-#7	C-H #DH361UDK W/DS200LX1
	1	4	T1	GE #9T22B4312 .75KVA TRANSFORMER

NOTES:

1. THIS PAGE SHOWS THE THREE PHASE POWER AND THE 120 VOLT TRANSFORMER WHICH FEEDS THE SYSTEM PANEL IN THE CONTROL ROOM.

P5185

THIS DRAWING IS THE PROPERTY OF CONSUMAT SYSTEMS, INC. AND IS TO BE USED ONLY FOR REFERENCE ITEMS PURCHASED FOR CONSUMAT SYSTEMS, INC. SUBJECT TO RETURN UPON DEMAND AND IS NOT TO BE COPIED, PHOTOGRAPHED, OFFSET, REPRODUCED LOANED OR USED IN ANY WAY WITHOUT WRITTEN PERMISSION OF CONSUMAT SYSTEMS, INC.

DR B.W.B.	DATE 7/08/94	CONSUMAT SYSTEMS, INC.	
CHK B.W.B.	DATE 7/08/94	RICHMOND, VA. U.S.A.	
APP -	DATE -		
APP -	DATE -	Schematic	
ARCHIVE -	PROJ NO. -	Power Requirements	
NEXT HIGHER ASSY -		Burroughs Wellcome Co.	
DO NOT SCALE	SCALE None	DWG NO. D-50-4443	REV. -
	REFERENCE -	SHEET 1 OF 21	

REV.	REVISION	DATE	DR	CHK	APP	APP
-	-	-	-	-	-	-

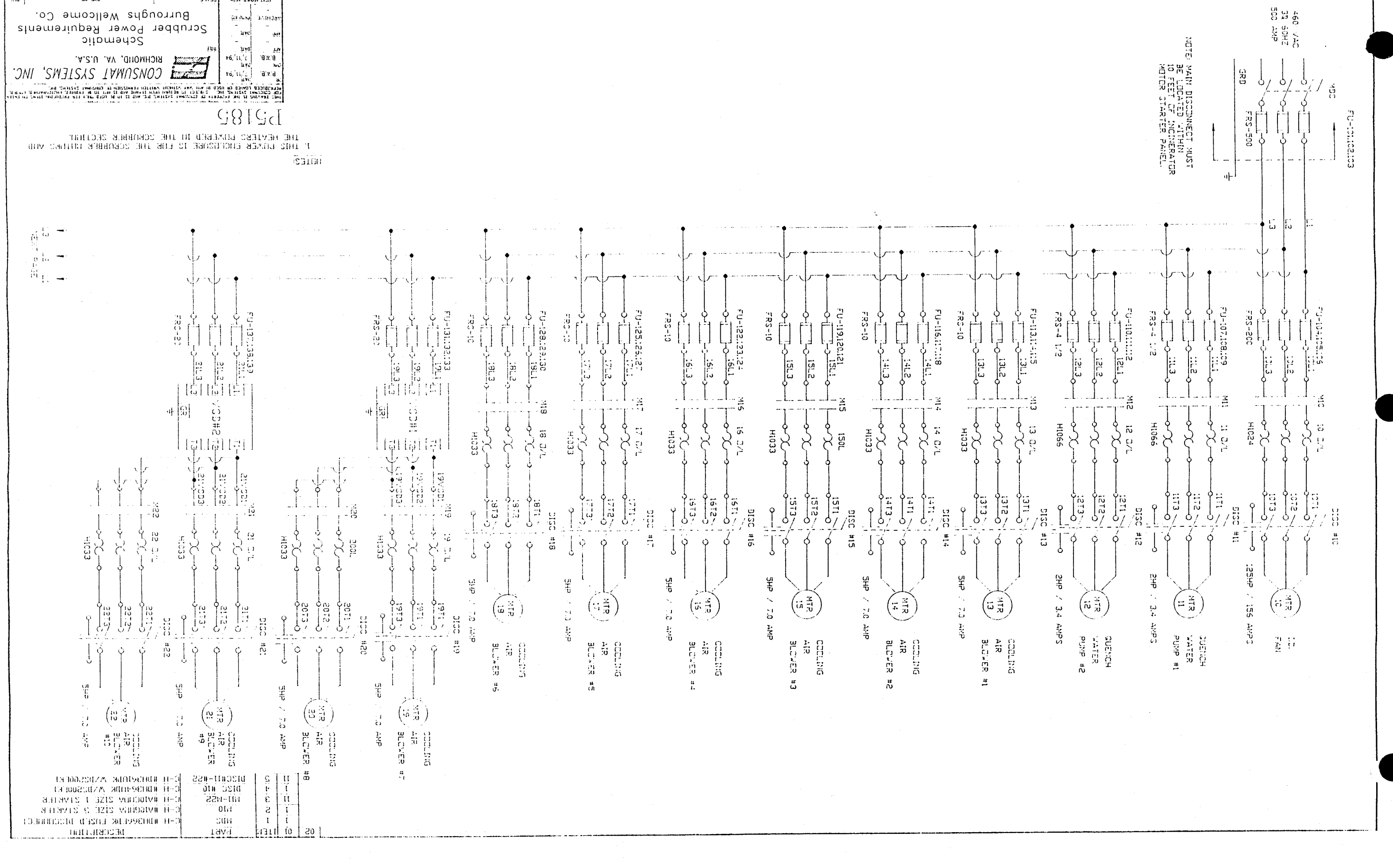

NOTES:

1. THIS POWER ENCLOSURE IS FOR THE SCRUBBER MOTORS AND THE HEATERS POWERED IN THE SCRUBBER SECTION.

P5185

CONSUMAT SYSTEMS, INC.
RICHMOND, VA. U.S.A.

Schematic
Scrubber Power Requirements
Burroughs Wellcome Co.

D-50-4443

SHEET 2 OF 21

A

02	01	ITEM	PART	DESCRIPTION
	1	1	MDS	C-H #DH364FDK FUSED DISCONNECT
	1	2	M10	C-H #A10GMA SIZE 3 STARTER
	1	3	M11-M22	C-H #A10GMA SIZE 1 STARTER
	1	4	DISC #10	C-H #DH364UDK W/DS200LK1
	1	5	DISC#11-#22	C-H #DH364UDK W/DS200LK1

02	01	ITEM	PART	DESCRIPTION
	1	1	M23	C-H #CN14UB13A SIZE 4 CONTACTOR
	1	2	DISC #23	C-H #DU364UDK W/DG200LF1
	8	3	M24-M31	C-H #A10CUNA SIZE 1 STARTER
	8	4	DISC #24-#31	C-H #DU361UDK W/DG200LF1
	1	5	T100	G.E. #9T50B55 3KVA TRANSFORMER

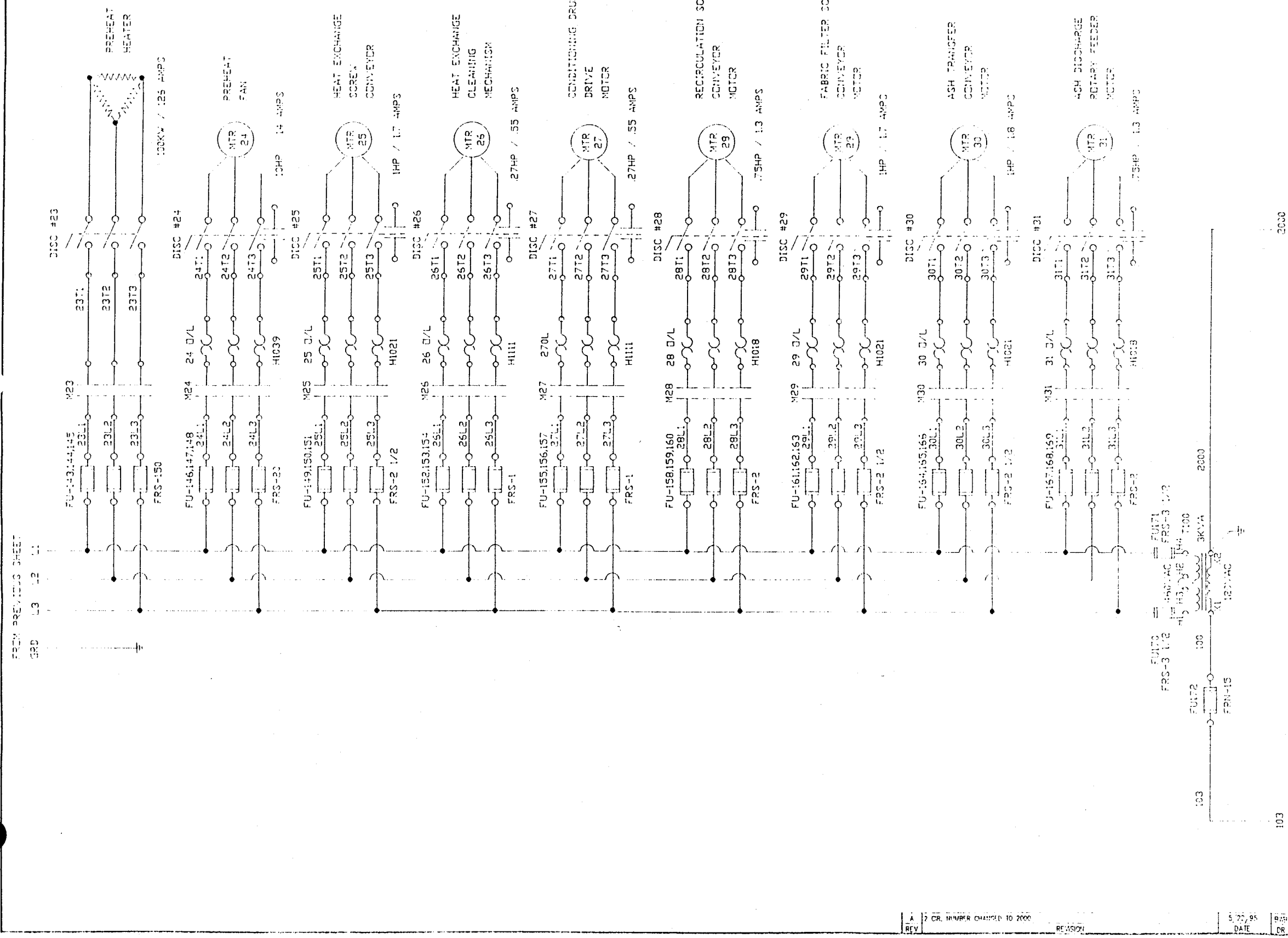

NOTES:

1. THIS POWER ENCLOSURE IS FOR THE SCRUBBER HEATERS AND THE HEATER POWER FOR THE SCRUBBER SECTION.

P5185

THIS DRAWING IS THE PROPERTY OF CONSUMAT SYSTEMS, INC. AND IS TO BE USED ONLY FOR ENTERPRISES DIRECTLY CONNECTED WITH CONSUMAT SYSTEMS, INC. IT SHALL NOT BE REPRODUCED, COPIED, LOANED OR USED IN ANY WAY WITHOUT WRITTEN PERMISSION OF CONSUMAT SYSTEMS, INC.

DR	B.W.B.	DATE	7/26/94
CHK	B.W.B.	DATE	7/26/94
APP	-	DATE	-
APP	-	DATE	-
ARCHIVE	-	REV	05
NEXT HIGHER ASSY	-		
DO NOT SCALE			

CONSUMAT SYSTEMS, INC.
RICHMOND, VA. U.S.A.

Schematic
Scrubber Power Requirements
Burroughs Wellcome Co.

SCALE	DWG NO	REV
None	D-50-4443	A
REFERENCE -	SHEET 3 OF 21	

REV	DESCRIPTION	DATE	DR	CHK	APP.	APP.
A	2 CR. NUMBER CHANGED TO 2000	5/22/95	BJB	BJB	-	-

REVISION

02	01	ITEM	PART	DESCRIPTION
	13	1	M40-M52	P&B #PRD7AYO-120AC CONTACTOR
	13	2	DISC #40-#52	C-H #DH261UDK DISCONNECT
	1	3	MDS	C-H #DH222FDK FUSED DISCONNECT

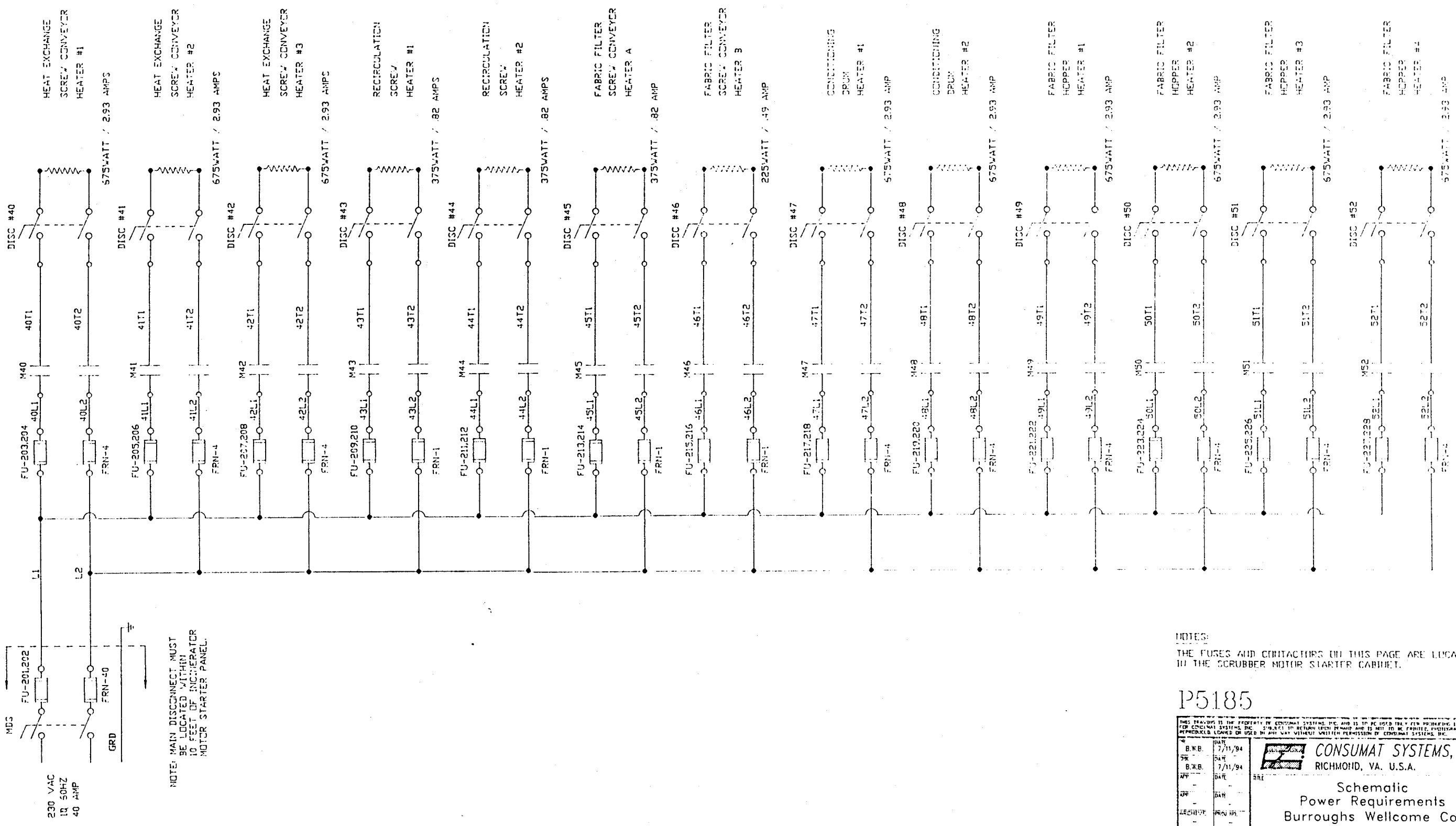

NOTES:

THE FUSES AND CONTACTORS ON THIS PAGE ARE LOCATED IN THE SCRUBBER MOTOR STARTER CABINET.

P5185

THIS DRAWING IS THE PROPERTY OF CONSUMAT SYSTEMS, INC. AND IS TO BE USED ONLY FOR PRODUCING ITEMS ON ORDER FOR CONSUMAT SYSTEMS, INC. SUBJECT TO RETURN UPON DEMAND AND IS NOT TO BE PRINTED, PHOTOGRAPHED, COPIED, REPRODUCED, LOANED OR USED IN ANY WAY WITHOUT WRITTEN PERMISSION OF CONSUMAT SYSTEMS, INC.

DR B.W.B.	DATE 7/11/94	CONSUMAT SYSTEMS, INC. RICHMOND, VA. U.S.A.
CHK B.W.B.	DATE 7/11/94	
APP -	DATE -	TITLE Schematic Power Requirements Burroughs Wellcome Co.
APP -	DATE -	
ARCHIVE -	PROJ NO. -	
NEXT HIGHER ASSY -		SCALE None
DO NOT SCALE		REFERENCE -
DWG. NO. D-50-4443		REV A
SHEET 4 OF 21		

REV	REVISION	DATE	DR	CHK	APP	APP
A	ITEM #1,4011	12/14/94	B.W.B.	B.W.B.	-	-

PARTS LIST					
QTY	BM	PART NUMBER	DESCRIPTION	CUT	FROM
1	1	11001613	HYD POWER UNIT 15 HP, 40 GAL		
1	2	11001755	5 VALVE/MANIFOLD SET		
1	3	11001703	HYD POWER UNIT 3 HP 20 GAL		
1	4	11001752	2-VALVE/MANIFOLD SET		
2	5	12001344	HYD CYL L22, 3.25" X 46" ES,SL,RC		
1	6	12001212	HYD CYL C16, 2.5" X 20" ES,TH,RC,X1=15.5		
2	7	12001557	HYD CYL FD18, 2.5" X 33" ES,CH,RC		
1	8	12001643	HYD CYL TR29, 5" X 40" ES,TH,RC,3" DP		
2	9	12001663	HYD CYL AR12, 5" X 46" ES,TH,RC,3"DP		
12	10	12001499	HYD CYL AR10, 1.5" X 1" ES,FF		
4	11	10007020	FLOW CONTROL VALVE 1/4" DELTROL T20BK		
1	12	10000504	ASCO SOLENOID VALVE 8262132		
1	13	07005100	BARKSDALE PRESS. SWITCH #C9612-3		
2	14	10004402	FLUID CONTROLS ILL22-F4-2		

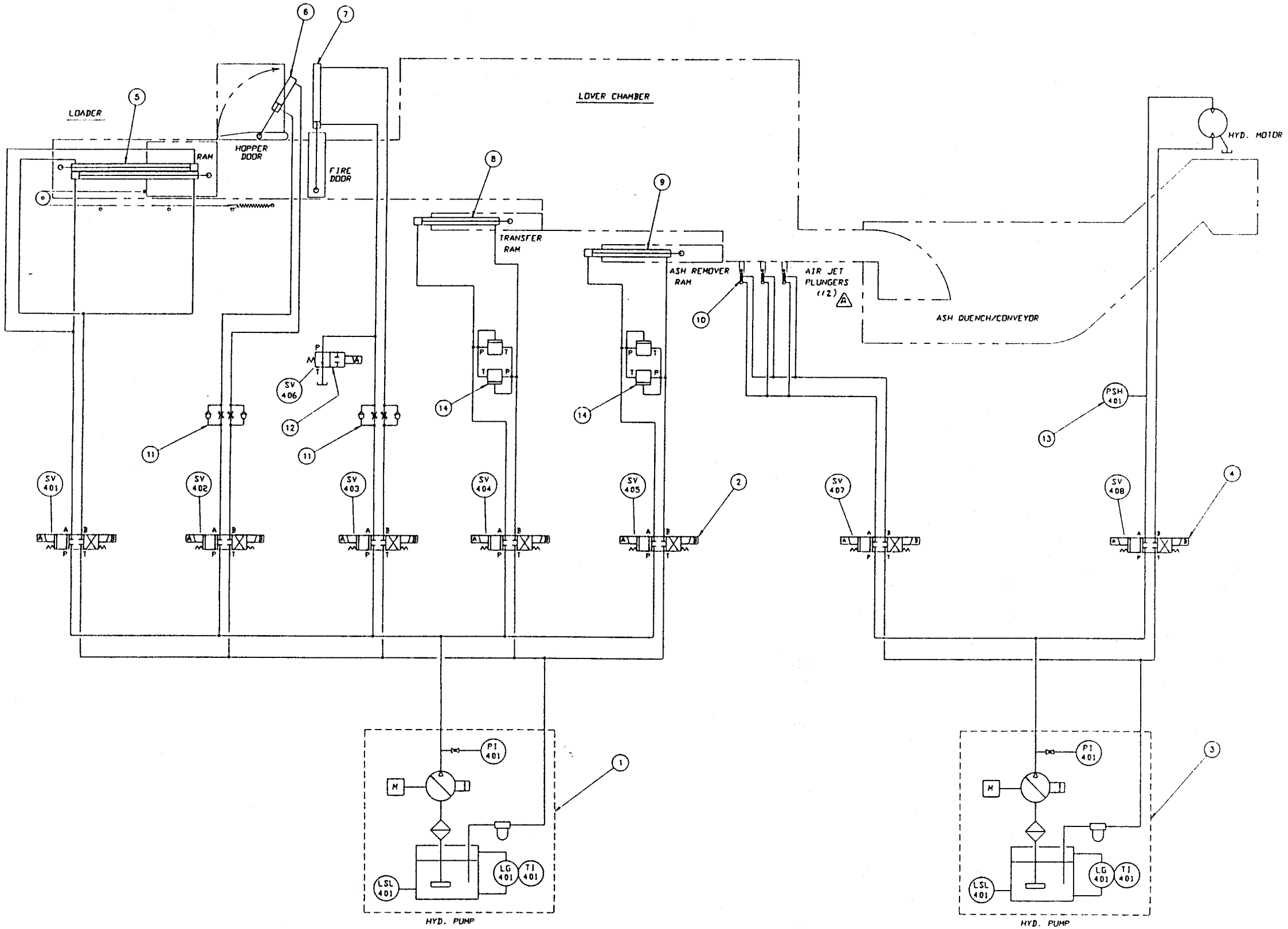

LOADER/INCINERATOR HYDRAULIC SYSTEM

ASH SUMP/CONVEYOR HYDRAULIC SYSTEM

THIS DRAWING IS THE PROPERTY OF CONSUMAT SYSTEMS, INC. AND IS TO BE USED ONLY FOR PRODUCING ITEMS ON ORDER FOR CONSUMAT SYSTEMS, INC. SUBJECT TO RETURN UPON DEMAND AND IS NOT TO BE REPRINTED, PHOTOGRAPHED, COPIED, REPRODUCED, LOANED OR USED IN ANY WAY WITHOUT WRITTEN PERMISSION OF CONSUMAT SYSTEMS, INC.

DR	DATE
DEX	5-11-94
CHK	DATE
APP	DATE
APP	DATE
ARCHIVE	PROJ NO. P5185

CONSUMAT SYSTEMS, INC.
RICHMOND, VA. U.S.A.

TITLE
HYDRAULIC SCHEMATIC
CONSUMAT CS-760 SYSTEM
BURROUGHS WELLCOME CO.

MDT HIGHER ASSY

DO NOT SCALE

SCALE 1 = 1

REFERENCE

DWG NO. D-34F-0186

REV. A

SHEET 1 OF 1

REV	REVISION	DATE	DR	CHK	APP	APP
A	AIR JET PLUNGER QTY WAS 9	6-17-94	TJK			

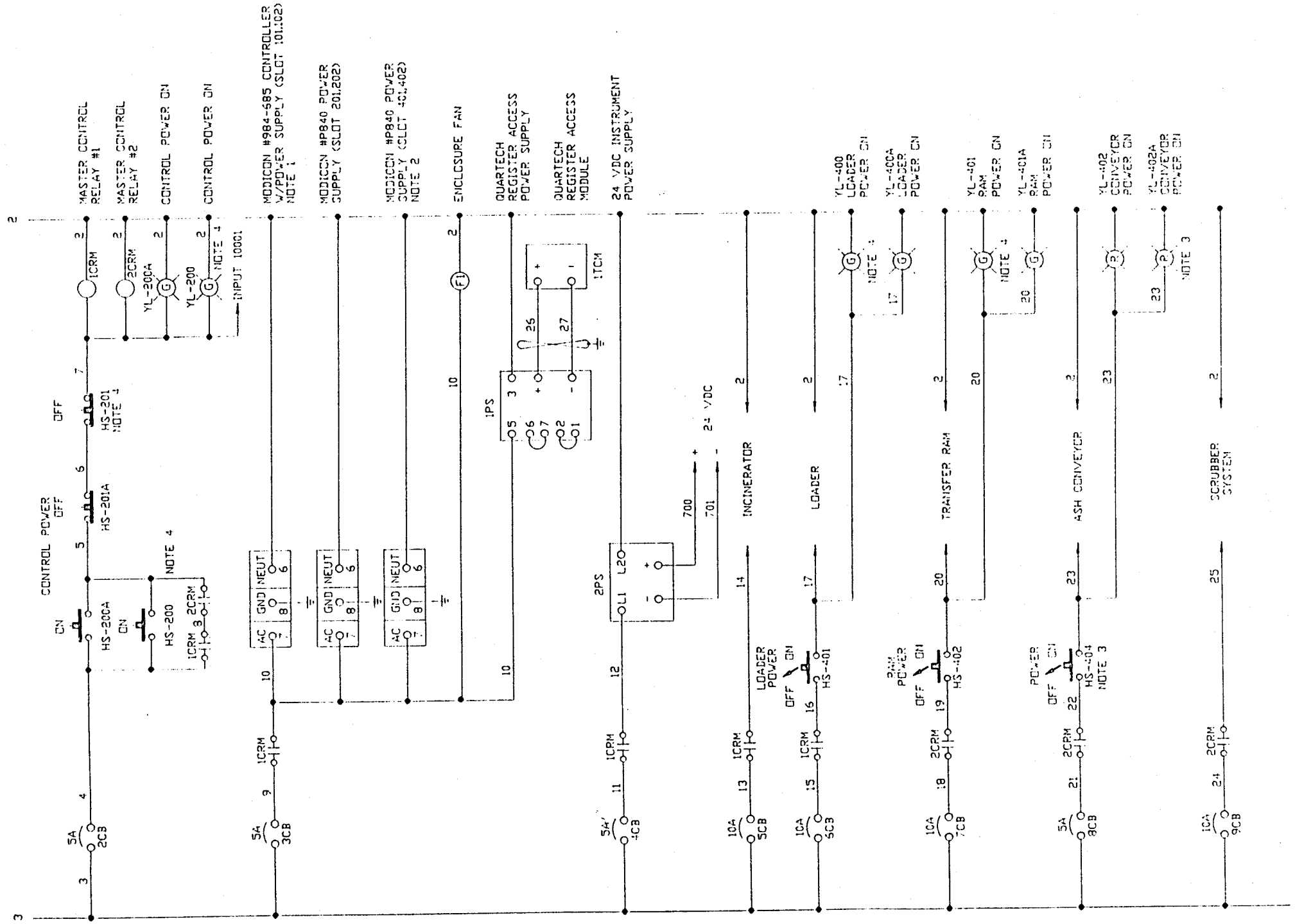

02	01	ITEM	PART	DESCRIPTION
	4	1	HS200,HS200A HS201,HS201A	A-B #800T-A1A PUSHBUTTON SWITCH
	3	2	HS401,HS402 HS404	A-B #800T-H2A SELECTOR SWITCH
	2	3	1CRM,2CRM	C-H #CN10BN5A CONTACTOR
	1	4	1PS	QUARTECH #8551 SUPPLY
	1	5	1TCM	QUARTECH #DM8330 DATAMATE
	1	6	2PS	LAMBDA #LFS-43-24 POWER SUPPLY
	1	7	F1	HOFFMAN #A-PA6AXFN FAN KIT
	3	8	2,3,7CB	A-B #1492GH-A 5 AMP. CIR. BRKR.
	4	9	4,5,6,8CB	A-B #1492GH-A 10 AMP. CIR. BRKR.
	8	10	YL200,YL200A YL400,YL400A YL401,YL401A YL402,YL402A	DIALCO #103-3101-05-103 SOCKET W/ #103-1332-403 GREEN LENS W/ SYLVANIA #6S6-120V BULB

ALL CONTROLS ON THIS PAGE ARE LOCATED IN THE INCINERATOR MOTOR STARTER ENCLOSURE UNLESS OTHERWISE NOTED.

NOTES:

1. MODICON S908 LOCATED IN SLOT 103
2. MODICON J890 LOCATED IN SLOT 403
3. LOCATED ON ASH CONVEYOR REMOTE.
4. LOCATED ON SOLID STATE PANEL.

THIS DRAWING IS THE PROPERTY OF CONSUMAT SYSTEMS, INC. AND IS TO BE USED ONLY FOR PRODUCING ITEMS ON ORDER FOR CONSUMAT SYSTEMS, INC. SUBJECT TO RETURN UPON DEMAND AND IS NOT TO BE PRINTED, CHARTERED, COPIED, REPRODUCED, LOANED OR USED IN ANY WAY WITHOUT WRITTEN PERMISSION OF CONSUMAT SYSTEMS, INC.

DR B.W.B.	DATE 7/26/94	CONSUMAT SYSTEMS, INC. RICHMOND, VA. U.S.A.
CHK B.W.B.	DATE 7/26/94	
APP -	DATE -	TITLE Schematic Control Power Burroughs Wellcome Co.
APP -	DATE -	
ARCHIVE -	PROJ NO. -	
NEXT HIGHER ASSY -		SCALE None
DO NOT SCALE		REFERENCE 42831
		DWG. NO. D-50-4443 SHEET 5 OF 21
		REV -

REV	REVISION	DATE	DR	CHK	APP	APP
-	-	-	-	-	-	-

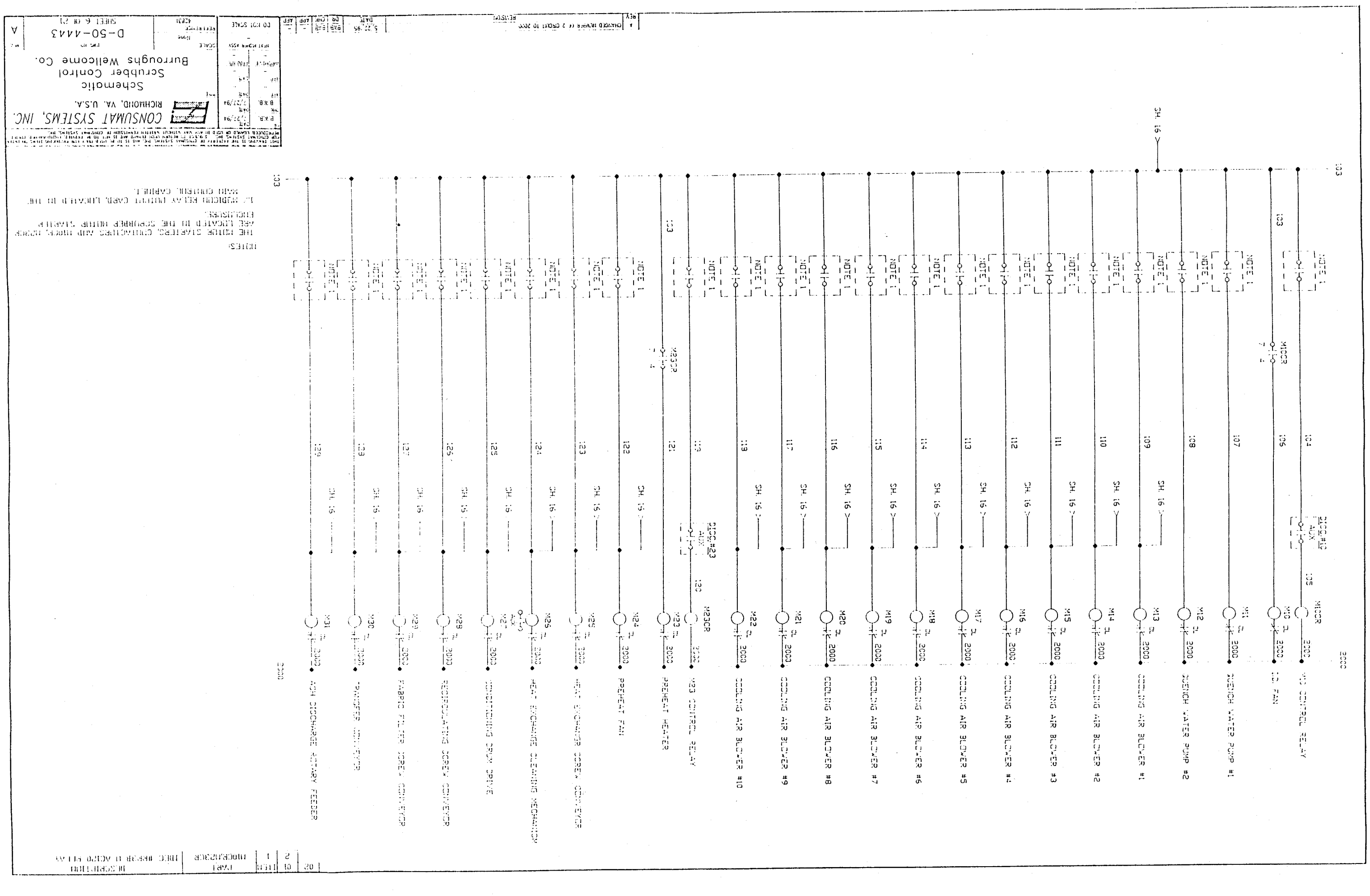

NOTES:

1. MOTOR RELAY CONTACT CAPS LOCATED IN THE MAIN CONTROL CABINET.

THE MOTOR STARTERS, CONTACTORS AND MOTOR PROTECTION ARE LOCATED IN THE SCRUBBER MOTOR STARTER ENCLOSURES.

REV	DESCRIPTION	DATE	DR	BAR	CHK	APP	APP
A	CHANGED MOVED (2 CKDWG 10 2CCC	5/22/95					

CONSUMAT SYSTEMS, INC.
RICHMOND, VA. U.S.A.

Schematic
Scrubber Control
Burroughs Wellcome Co.

SCALE	NONE	DWG NO	D-50-4443
		SHEET 6 OF 21	

A

20	10	11 1/2	1	FM0CSJM23CR	DIRECT OPERATED 11 AC/DC 5P1 A4
	2			FAN1	DIRECT OPERATED

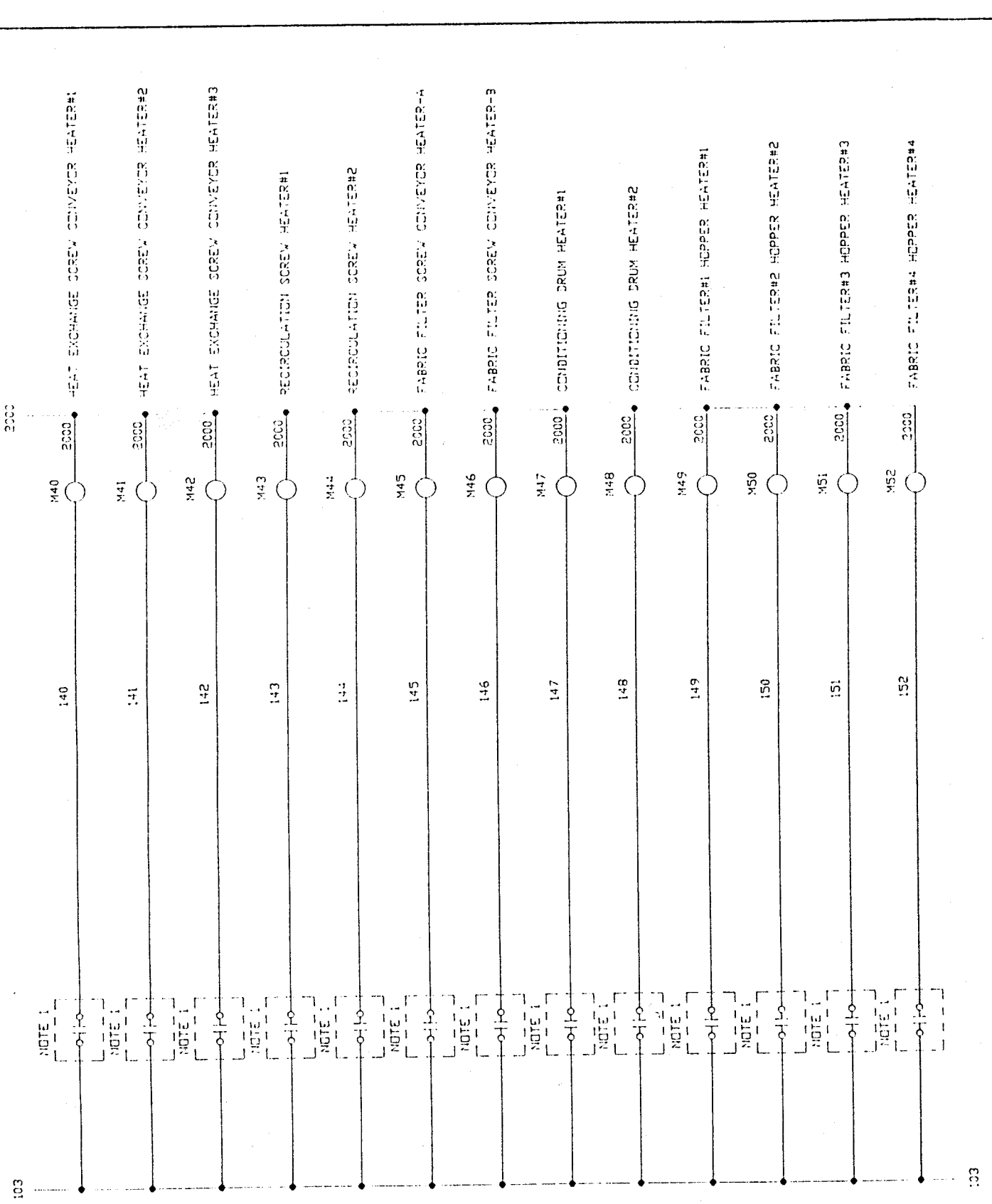

NOTES:

THE CONTACTORS ARE LOCATED IN THE SCRUBBER MOTOR STARTER ENCLOSURE.

1.) MODICON RELAY OUTPUT CARD, LOCATED IN THE MAIN CONTROL CABINET.

THIS DRAWING IS THE PROPERTY OF CONSUMAT SYSTEMS, INC. AND IS TO BE USED ONLY FOR PROPERTIES OWNED BY CONSUMAT SYSTEMS, INC. SUBJECT TO RETURN UPON DEMAND AND IS NOT TO BE PRINTED, PHOTOGRAPHED, COPIED, REPRODUCED, LOANED OR USED IN ANY WAY WITHOUT WRITTEN PERMISSION OF CONSUMAT SYSTEMS, INC.

DR B.W.B.	DATE 7/27/94
CHK B.W.B.	DATE 7/27/94
APP	DATE
APP	DATE
ARCHIVE	PROJ NO.
NEXT HIGHER ASSY	
DO NOT SCALE	

CONSUMAT SYSTEMS, INC.
RICHMOND, VA. U.S.A.

TITLE
Schematic
Scrubber Heater Control
Burroughs Wellcome Co.

SCALE None
REFERENCE

DWG NO. D-50-4443
SHEET 2 OF 21
REV A

REV	REVISION	DATE	DR	CHK	APP	APP
A	CHANGED 2 CIRCUIT NUMBER TO 2000	5/22/95	BWB	BWB		

02	01	ITEM	PART	DESCRIPTION

SLOT # 104

00001	I.D. FAN START	1	103
		2	104
00002	QUENCH WATER PUMP #1 START	3	103
		4	107
NOT USED		5	
00003	QUENCH WATER PUMP #2 START	6	103
		7	108
00004	COOLING AIR BLOWER #1 START	8	103
		9	109
NOT USED		10	
00005	COOLING AIR BLOWER #2 START	11	103
		12	110
00006	COOLING AIR BLOWER #3 START	13	103
		14	111
NOT USED		15	
00007	COOLING AIR BLOWER #4 START	16	103
		17	112
00008	COOLING AIR BLOWER #5 START	18	103
		19	113
NOT USED		20	

MODICON #AS-B814-108

SLOT # 105

00009	COOLING AIR BLOWER #6 START	1	103
		2	114
00010	COOLING AIR BLOWER #7 START	3	103
		4	115
NOT USED		5	
00011	COOLING AIR BLOWER #8 START	6	103
		7	116
00012	COOLING AIR BLOWER #9 START	8	103
		9	117
NOT USED		10	
00013	COOLING AIR BLOWER #10 START	11	103
		12	118
00014	PREHEAT HEATER START	13	103
		14	119
NOT USED		15	
00015	PREHEAT FAN START	16	103
		17	122
00016		18	
		19	
NOT USED		20	

MODICON #AS-B814-108

SLOT # 106

00017	HEAT EXCHANGER SCREW CONVEYOR START	1	103
		2	123
00018	HEAT EXCHANGER CLEANING MECHANISM START	3	103
		4	124
NOT USED		5	
00019	CONDITIONING DRUM DRIVE START	6	103
		7	125
00020	RECIRCULATING SCREW CONVEYOR START	8	103
		9	126
NOT USED		10	
00021	FABRIC FILTER SCREW CONVEYOR START	11	103
		12	127
00022	ASH TRANSFER CONVEYOR START	13	103
		14	128
NOT USED		15	
00023	ASH DISCHARGE ROTARY FEEDER START	16	103
		17	129
00024		18	
		19	
NOT USED		20	

MODICON #AS-B814-108

NOTE: SEE SHEET 6 FOR OUTPUTS USE

P5185

THIS DRAWING IS THE PROPERTY OF CONSUMAT SYSTEMS, INC. AND IS TO BE USED ONLY FOR PURPOSES AUTHORIZED BY CONSUMAT SYSTEMS, INC. IT IS NOT TO BE LOANED, COPIED OR REPRODUCED, LOANED OR USED IN ANY WAY WITHOUT WRITTEN PERMISSION OF CONSUMAT SYSTEMS, INC.

DR	BAB	DATE	8/10/94
CHK	BAB	DATE	8/10/94
APP	-	DATE	-
APP	-	DATE	-
RELEASE	-	DRAWING NO.	-
NEXT HIGHER ASSY	-		
DO NOT SCALE			

CONSUMAT SYSTEMS, INC.
RICHMOND, VA. U.S.A.

SIZE

Schematic
Scrubber Logic - Motors
Burroughs Wellcome Co.

SCALE	DWG NO.	REV
None	D-50-4443	-
REFERENCE	SHEET 8 OF 21	

REV	-	DESCRIPTION	-	DATE	-	DR	-	CHK	-	APP	-	APP	-

02	01	ITEM	PART	DESCRIPTION

SLOT # 107

00025	MVTC #2 IDLE MODE SECOND SET POINT SELECT NOTE 2	1	132
		2	133
00026		3	103
		4	
	NOT USED	5	
00027		6	103
		7	
00028		8	103
		9	
	NOT USED	10	
00029		11	103
		12	
00030	HEAT EXCHANGE SCREW CONVEYOR HEATER #1 START M40	13	103
		14	140
	NOT USED	15	
00031	HEAT EXCHANGE SCREW CONVEYOR HEATER #2 START M41	16	103
		17	141
00032	HEAT EXCHANGE SCREW CONVEYOR HEATER #3 START M42	18	103
		19	142
	NOT USED	20	

MODICON #AS-B814-108

SLOT # 108

00033	RECIRCULATION SCREW HEATER #1 START M43	1	103
		2	143
00034	RECIRCULATION SCREW HEATER #2 START M44	3	103
		4	144
	NOT USED	5	
00035	FABRIC FILTER SCREW CONVEYOR HEATER - A START M45	6	103
		7	145
00036	FABRIC FILTER SCREW CONVEYOR HEATER - B START M46	8	103
		9	146
	NOT USED	10	
00037	CONDITIONING DRUM HEATER #1 START M47	11	103
		12	147
00038	CONDITIONING DRUM HEATER #2 START M48	13	103
		14	148
	NOT USED	15	
00039	FABRIC FILTER #1 HOPPER HEATER #1 START M49	16	103
		17	149
00040	FABRIC FILTER #2 HOPPER HEATER #2 START M50	18	103
		19	150
	NOT USED	20	

MODICON #AS-B814-108

SLOT # 109

00041	FABRIC FILTER #3 HOPPER HEATER #3 START M51	1	103
		2	151
00042	FABRIC FILTER #4 HOPPER HEATER #4 START M52	3	103
		4	152
	NOT USED	5	
00043		6	103
		7	
00044		8	103
		9	
	NOT USED	10	
00045		11	
		12	
00046		13	
		14	
	NOT USED	15	
00047		16	
		17	
00048	I.D. DAMPER FORCE CLOSE NOTE 3	18	761
		19	762
	NOT USED	20	

MODICON #AS-B814-108

NOTE: 1. SEE SHEET 7 FOR OUTPUTS USE UNLESS SPECIFIED.
2. SEE PAGE 10.
3. SEE PAGE 20.

P5185

THIS DRAWING IS THE PROPERTY OF CONSUMAT SYSTEMS, INC. AND IS TO BE USED ONLY FOR PRODUCING ITEMS ON ORDER FOR CONSUMAT SYSTEMS, INC. SUBJECT TO RETURN UPON REMAND AND IS NOT TO BE PRINTED, ENCLOSURE, COPIED, REPRODUCED, LOANED OR USED IN ANY WAY WITHOUT WRITTEN PERMISSION OF CONSUMAT SYSTEMS, INC.

DR BAB	DATE 8/10/94	CONSUMAT SYSTEMS, INC. RICHMOND, VA. U.S.A.
CHK BAB	DATE 8/10/94	
APP	DATE	TITLE Schematic Scrubber Logic - Heaters Burroughs Wellcome Co.
APP	DATE	
ARCHIVE	PROJ NO.	
NEXT HIGHER ASSY		SCALE None
DO NOT SCALE		REFERENCE
		DWG NO. D-50-4443 SHEET 9 OF 21
		REV —

REV | REVISION | DATE | DR | CHK | APP | APP

QTY	ITEM	PART NUMBER	DESCRIPTION
1	4	LTC/UTC/LLTC SYSTEM W/PROCESS CONTROLLER TCH	CONSUMAT #UT-14 CONTROLLER
1	20	6CR	IDEC #RR2P-U AC120 RELAY
1	3	TC-1, TC-3	H/W #5A1S918-1 THERMOCOUPLE
1	4	TC-2	H/W #5A1C912-1 THERMOCOUPLE
2	5	MM3, 5	H/W #MA2784A1004 MODULE, METER
3	6	MM 1, 2, 4	H/W #MA2784A1004 MODULE, METER W/ #M50-A1068 ADJ. SWITCH
1	7	10CR	H/W #1182CR RELAY COMP.
1	8	PSU102	H/W #MA2481020 POWER SUPPLY
1	9	UBP#1	H/W #MA2784A1004 MODULE, METER
1	10	S1	H/W #CR2943A101 D/I SWITCH
1	11	9CR	ASCO #8290C9 SOLENOID VALVE
1	12	4CR	ASCO #8210G063 SOLENOID VALVE
2	13	1 & 7CR	H/W #L2PCA1PB24 RELAY W/ #L2PBA1AP08 ACTUATOR
1	14	TS	H/W #0642A1P14 TEMPERATURE SENSOR
1	15	PSU101	A-B #8501 PROP TEMPERATURE PR.
1	16	PI 101	DIALCO #103-3101 0-30 INCH VACUUM GAUGE W/ #103-1332 4X2 GREEN LENS W/ SUNSCANIA #S25 170 PURP
1	17	2SOL	ASCO #8210G63 SOLENOID VALVE
1	18	PSL101	H/W #0643E1004 LOW PRESS SW.
1	19	PSH101	H/W #0643D1005 HIGH PRESS SW.

NOTE 1. SEE PAGE 19

P5185

THIS DRAWING AND SPECIFICATION, DESIGN, AND IDEAS ARE THE PROPERTY OF AND PROPRIETARY TO CONSUMAT SYSTEMS, INC. AND ARE NOT TO BE DISCLOSED TO OTHERS OR USED IN WHOLE OR IN PART WITHOUT THE WRITTEN PERMISSION OF CONSUMAT SYSTEMS, INC.

CONSUMAT SYSTEMS, INC.
RICHMOND, VA. U.S.A.

Schematic
Incinerator Burner Control
Burroughs Wellcome Co.

B.A.B.	8/10/94	
CHK B.A.B.	8/10/94	
APP	DATE	
APP	DATE	
ARRANGE	PROGRAM	
NEXT HIGHER ASSY		
DO NOT SCALE		

SCALE None
REFERENCE
DWG NO D-50-4443
SHEET 10 OF 21
REV –

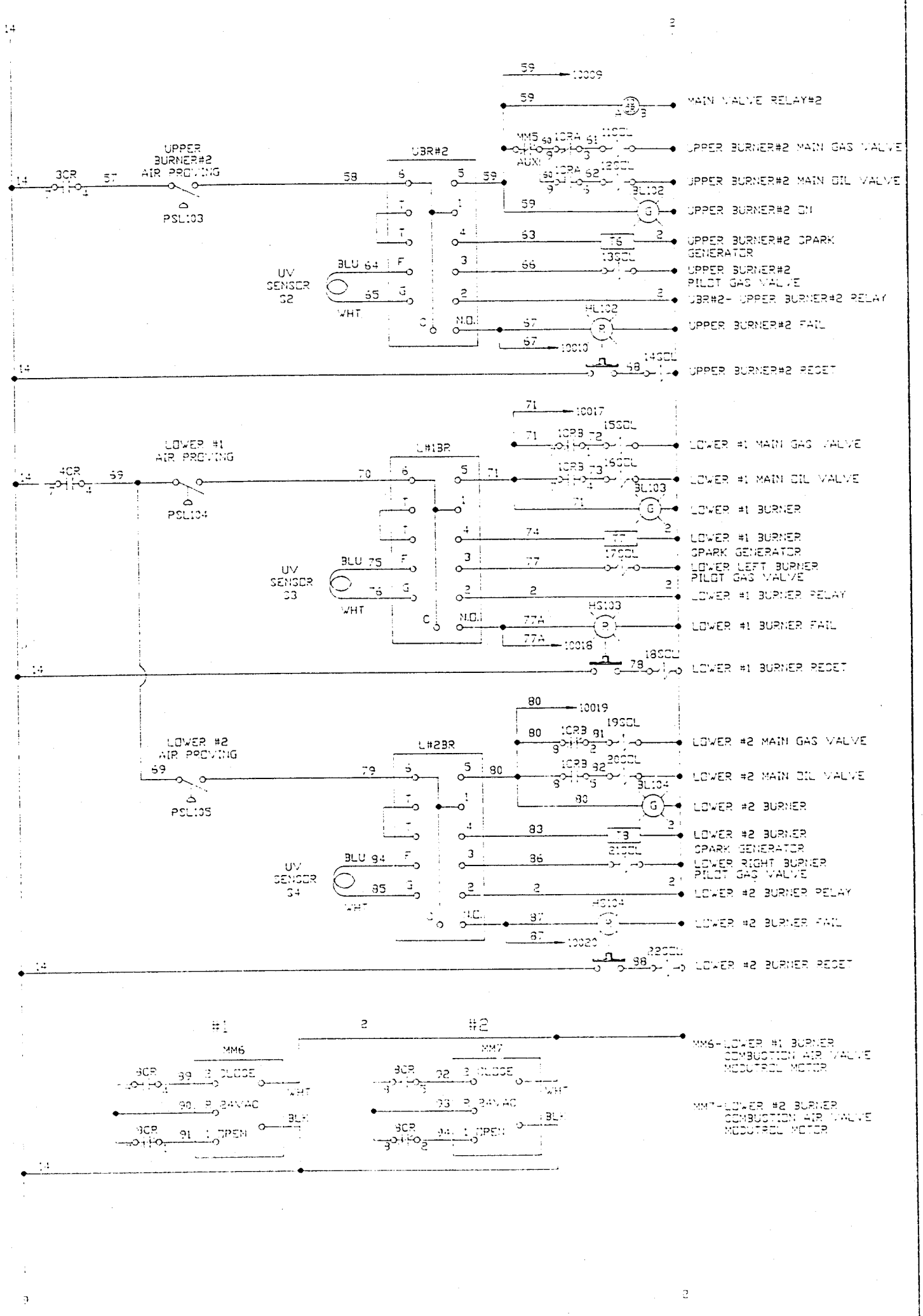

02	01	ITEM	PART	DESCRIPTION
	1	1	10CF	IDEC #RR3B-U-AC120 RELAY
	2	2	MM6 & 7	HCV #M7284A1004 MODTROL MOTOR
	3	3	T6,T7,T8	HCV #Q624A1014 IGNITION TRANS.
	3	4	14,18,22SOL	HCV #118702B RESET CUTOFF
	3	5	PSL103-105	HCV #C6450J1020 PRESSURE SWITCH
	3	6	SBF#2,LL,BR,LF,BR	HCV #RA890G1260 BURNER RELAY
	3	7	S2-S4	HCV #C7035A1031 UV SENSOR
	3	8	13,17,21SOL	ASCO #8262G2 SOLENOID VALVE
	1	9	11SOL	ASCO #8215A90 SOLENOID VALVE
	2	10	15,19SOL	ASCO #8215B20 SOLENOID VALVE
	3	11	12,16,20SOL	ASCO #8266D1V SOLENOID VALVE
	3	12	HS102-104	A-B #8001-PB16R ILLUMINATED PB.
	3	13	BL102-104	DIALCO #103-3101-05-103 SHEET
				W/#103 1332-403 GREEN LENS
				W/ SILVANIA #656 120 BULB

P5185

CONSUMAT SYSTEMS, INC.
RICHMOND, VA. U.S.A.

Schematic
Incinerator Burner Control
Burroughs Wellcome Co.

DWG NO D-50-4443
SHEET 11 OF 21
REV A

DO NOT SCALE

SLOT #203

7	1	10001	MASTER CONTROL RELAYS ENERGIZED
201	2	10002	HS202-INCINERATOR START PUSHBUTTON
50	3	10003	UPPER#1 BURNER ON
55	4	10004	UPPER#1 BURNER FAIL
204	5	10005	MM2 AUX. SWITCH OPEN WHEN FUEL SHUTS OFF U/C #1
205 (14 13)	6	10006	HVTC#1 UPPER CHAMBER#1 50°F OVER (ALARM1)
206 (11 10)	7	10007	LTC- LOWER CHAMBER TEMP. CONTROLLER INPUT ON AT SETPOINT
207 (14 13)	8	10008	DTC- OVER TEMP. SETPOINT (ALARM 1)
2	9		COMMON
	10		NOT USED
59	11	10009	UPPER#2 BURNER ON
67	12	10010	UPPER#2 BURNER FAIL
210	13	10011	HS205-SYSTEM FAULT RESET PUSHBUTTON
TIMED / TEMP 211	14	10012	HS203-LOWER CHAMBER MODE SELECTOR SWITCH
212 (14 13)	15	10013	HVTC#2 UPPER CHAMBER#2 50°F OVER (ALARM1)
213 (14 12)	16	10014	LCLTC- L/C LOCKOUT SETPOINT INPUT ON AT 1200 DEG (ALARM2)
214 (14 12)	17	10015	LLDTC- LOCKOUT SETPOINT U/C #2 INPUT ON AT 1800 DEG (ALARM1)
215 (14 12)	18	10016	LWTC- LIQUID WASTE SETPOINT U/C #1 INPUT ON AT 1200 DEG (ALARM2)
2	19		COMMON
	20		NOT USED

MODICON #AS-B805-016

SLOT #204

71	1	10017	LOWER#1 LEFT BURNER ON
77A	2	10018	LOWER#1 LEFT BURNER FAIL
80	3	10019	LOWER#2 RIGHT BURNER ON
87	4	10020	LOWER#2 RIGHT BURNER FAIL
GAS / OIL 220	5	10021	HS100-FUEL SELECT GAS/OIL
OFF / ON 221	6	10022	HS105-LIQUID WASTE OFF/ON
47	7	10023	GAS PRESSURE OK KEEP WARM MODE
IDLE / SH-DN 223	8	10024	HS204-MODE SELECT IDLE/SHUT-DOWN
2	9		COMMON
	10		NOT USED
MAN / AUTO 225	11	10025	ASH REMOVAL POWER ON
226 NOTE 5	12	10026	HS403- RAM MANUAL/AUTO SELECTOR SW
227 NOTE 5	13	10027	HSE403-MANUAL ASH REMOVAL RAM EXTEND PB SWITCH & REMOTE. HSE403A
228 (2 1)	14	10028	HSR403-MANUAL ASH REMOVAL RAM RETRACT PB SWITCH & REMOTE. HSR403A
229 (2 1)	15	10029	ZSE403-ASH REMOVER RAM EXTENDED LIMIT SWITCH
MM1 14 230 AUX	16	10030	ZSR403-ASH REMOVER RAM RETRACTED LIMIT SWITCH
17 231	17	10031	MM1-AUX. CLOSES WHEN THE DAMPER IS FULL CLOSED
2	18	10032	LSL401-MAIN HYDR. OIL LEVEL LOW SWITCH (NOTE 4)
	19		COMMON
	20		NOT USED

MODICON #AS-B805-016

SLOT #205

	1	10033	ASH CONVEYOR POWER ON
233 AUTO / JOG CONT 234 X100	2	10034	PSH401- ASH CONVEYOR HYDRAULIC PRESSURE SW.
235 X0X	3	10035	HS406-ASH CONVEYOR MODE SELECTOR SW. JOG (NOTE 3)
236	4	10036	HS406-ASH CONVEYOR MODE SELECTOR SW. CONT. (NOTE 3)
237	5	10037	HSR408-ASH CONV. JOG PUSHBUTTON (NOTE 3)
238	6	10038	HSR403-ASH CONV. FAULT RESET PUSHBUTTON (NOTE 3)
239	7	10039	LSL402-ASH CONV. HYDRAULIC OIL LEVEL LOW SWITCH (NOTE 2)
2	8	10040	HSE402-MANUAL TRANSFER RAM EXTEND PUSHBUTTON
	9		COMMON
	10		NOT USED
240	11	10041	HSR402-MANUAL TRANSFER RAM RETRACT PUSHBUTTON
241 (2 1)	12	10042	ZSE402-TRANSFER RAM EXTEND LIMIT SWITCH
242 (2 1)	13	10043	ZSR402-TRANSFER RAM RETRACTED LIMIT SWITCH
243	14	10044	PSL202-ASH SUMP AIR PURGING PRESSURE SW.
14 247 (11 10)	15	10045	TSH- UPPER CHAMBER #2 ALARM TEMPERATURE
244	16	10046	VSP #1 FAULT CLOSES ON FAULT
245	17	10047	VSD #2 FAULT CLOSES ON FAULT
#1 / #2 246	18	10048	HC601-PRIMARY QUENCH WATER PUMP SELECTOR
2	19		COMMON
	20		NOT USED

MODICON #AS-B805-016

SLOT #206

	1	10049	LOADER POWER ON
MAN / AUTO 249	2	10050	HS402-LOADER MANUAL/AUTO SELECTOR SWITCH
250 NOTE 6	3	10051	HSE401-HOPPER OPEN PUSHBUTTON & REMOTE. HSE401A
251 NOTE 6	4	10052	HSC401-HOPPER CLOSED PUSHBUTTON (LOADER & REMOTE. HSC401A
252 (3 4)	5	10053	ZSO401-HOPPER OPEN LIMIT SWITCH
253 (3 4)	6	10054	ZSC401-HOPPER CLOSED LIMIT SWITCH
	7	10055	
255 (2 1)	8	10056	ZSR401- LOADER RAM RETRACTED LIMIT SWITCH
2	9		COMMON
	10		NOT USED
256	11	10057	HSE402-MANUAL FIRE DOOR OPEN PUSHBUTTON
257	12	10058	HSC402-MANUAL FIRE DOOR CLOSE PUSHBUTTON
258 (2 1)	13	10059	ZSO402-FIREDOOR OPEN LIMIT SWITCH
259 (2 1)	14	10060	ZSC402-FIREDOOR CLOSED LIMIT SWITCH
260	15	10061	HSE401-MANUAL LOADER RAM EXTEND PUSHBUTTON
261	16	10062	HSR401-MANUAL LOADER RAM RETRACT PUSHBUTTON
262 (3 4)	17	10063	ZSE401-LOADER RAM EXTENDED LIMIT SWITCH
263 (3 4)	18	10064	ZSM401-LOADER RAM MID-STROKE LIMIT SWITCH
2	19		COMMON
	20		NOT USED

MODICON #AS-B805-016

02	01	QTY	PART	DESCRIPTION
	16	1	HS202,205,403 HSC401,402 HSE401,402,403 HS0401,402 HSR401,402,403, HSP408 HSE403A HSR403A	A-B #8001 A1A PUSHBUTTON SW.
	8	2	HS100,105,202, HS203,204,406 HS403,601	A-B #8001-H2A SELECTOR SW.
	11	3	ZSC401,402 ZSE401,402,403 ZSH401 ZSO401,402 ZSP401,402,403	MICRO SWITCH LIMIT SWITCH W/ 802-5R2 ROLLER ARM
	2	4	LSL401,402	MOUNTED WITH HSR406
	1	5	HS406	A-B #8001-J2A SELECTOR SW. W/ #8001-N2A CONTACT BLOCK
	1	6	PSH401	RAPIDAIR #C2612-3 PRESSURE SW.
	1	7	PSL202	H&W #C645C1020 PRESSURE SWITCH

NOTES:

1. LOCATED ON REMOTE ASH REMOVER STATION.
2. LOCATED ON CONVEYOR HYDRAULIC TANK.
3. LOCATED ON REMOTE ASH CONVEYOR STATION.
4. LOCATED ON MAIN HYDRAULIC TANK.
5. LOCATED ON ASH REMOVER REMOTE P.B. STATION.
6. LOCATED ON REMOTE PENDANT STATION.

P5185

THIS DRAWING IS THE PROPERTY OF CONSUMAT SYSTEMS, INC. AND IS NOT TO BE USED FOR ANY PURPOSE EXCEPT THAT AUTHORIZED BY CONSUMAT SYSTEMS, INC. IT IS NOT TO BE LOANED, PHOTOGRAPHED, COPIED, REPRODUCED, LOANED OR USED IN ANY WAY WITHOUT WRITTEN PERMISSION OF CONSUMAT SYSTEMS, INC.

REV	DATE	BY	CHK	ENG	APP
C	10346,10047	12/14/94	B.K.B.	P.A.B.	A.B.	-	-
B	UPDATE	12/05/94	B.K.B.	P.A.B.	A.B.	-	-
A	ADD REMOTES - NOTES 5 & 6	11/09/94	B.K.B.	P.A.B.	A.B.	-	-

REVISION

B.K.B.	8/17/94	
CHK	DATE	
B.K.B.	8/17/94	
APP	DATE	
-	-	
APP	DATE	
-	-	
ARCHIVE	MFG NO.	
-	-	

CONSUMAT SYSTEMS, INC.
RICHMOND, VA. U.S.A.

Schematic
Incinerator System Inputs
Burroughs Wellcome Co.

NEXT HIGHER ASSY	SCALE	DWG NO	REV
DO NOT SCALE	None	D-50-4443	C
	REFERENCE 41534	SHEET 12 OF 21	

SLOT #207

9CR-EMERGENCY BYPASS RELAY	00049	1	265 — 9CR A/B
	00050	2	
M7-OIL PUMP MOTOR STARTER	00051	3	267 — M7 O/L
HH100-ALARM MALFUNCTION HORN NOTE 3	00052	4	268
ML100-ALARM MALFUNCTION LIGHT NOTE 3	00053	5	269 — R; DISC 1 271 — M1 O/L; 27 0 7 9CR 14
M1-UPPER CHAMBER BLOWER MOTOR STARTER	00054	6	
YL202-PREPURGE ON LIGHT	00055	7	274 — A
2CR-UPPER#1 BURNER START RELAY	00056	8	275 — 2CR A/B
COMMON		9	
HOT		10	14
4CR-LOWER BURNER START RELAY	00057	11	276 — 4CR A/B
7CR- LOWER CHAMBER UNDER FIRE AIR RELAY	00058	12	277 — 7CR A/B
8CR- LOWER CHAMB. BURNER COMBUST. AIR VALVE RELAY	00059	13	278 — 8CR A/B
YL201,YL201A-INCINERATOR ON LIGHT	00060	14	279 — G; G — 2 NOTE2
YL207-POST PURGE ON LIGHT	00061	15	280 — A
	00062	16	
1CRA,1CRB-GAS / OIL SELECT RELAYS	00063	17	282 — 1CRA A/B; 1CRB
LLL401-MAIN HYDRAULIC OIL LEVEL LOW LIGHT	00064	18	283 — R
COMMON		19	
HOT		20	14

SLOT #208

M2- HYDRAULIC PUMP MOTOR STARTER YL404-PUMP ON LIGHT	00065	1	DISC 2 285 — M2 O/L; 2 8 4 8 9CR 2 14; M2 286 — G — YL404 ON
M3-LOWER CHAMBER BLOWER	00066	2	DISC 3 288 — 289 M3 O/L
M4- BURNER BLOWER	00067	3	DISC 4 291 — 292 M4 O/L
3CR-UPPER#2 BURNER START RELAY	00068	4	293 — 3CR A/B
	00069	5	
M5-ASH SUMP BLOWER	00070	6	DISC5 295 — 296 M5 O/L
	00071	7	
5CR-LOAD ANTICIPATE RELAY	00072	8	299 — 5CR A/B
COMMON		9	
HOT		10	14
YL203-WARMUP CYCLE LIGHT	00073	11	300 — A
YL204-NORMAL OPERATION LIGHT	00074	12	301 — G
YL205-BURNDOWN CYCLE LIGHT	00075	13	302 — G
YL206-IDLE/ KEEP WARM LIGHT	00076	14	303 — A
5 SOL,6 SOL-LIQUID WASTE MAIN FUEL SOLENOID VALVES	00077	15	304 — 304
7 SOL-UPPER CHAMBER#1 MAIN GAS SOLENOID VALVE	00078	16	305
8 SOL-UPPER CHAMBER#1 MAIN OIL SOLENOID VALVE	00079	17	306
23 SOL-LOWER COOLING WATER SPRAY	00080	18	307
COMMON		19	
HOT		20	14

SLOT #209

SV402A-HOPPER OPEN SOLENOID VALVE	00081	1	308 — A — YLO401 OPENING
SV402B-HOPPER CLOSE SOLENOID VALVE	00082	2	309 — A — YLC401 CLOSING
ZLO401-HOPPER OPEN LIGHT	00083	3	310 — A
ZLC401-HOPPER CLOSED LIGHT	00084	4	311 — G
SV402A-FIRE DOOR UP SOLENOID VALVE	00085	5	312 — A — YLO402 GOING UP
SV402B-FIRE DOOR DOWN SOLENOID VALVE	00086	6	313 — A — YLC402 GOING DOWN
ZLO402-FIREDOOR UP LIGHT	00087	7	314 — A
ZLC402-FIREDOOR DOWN LIGHT	00088	8	315 — G
COMMON		9	2 6
HOT		10	17
SV401A-LOADER RAM EXTEND SOL. VALVE	00089	11	316 — A — YLE401-EXTENDING
SV401B-LOADER RAM RETRACT SOL. VALVE	00090	12	317 — A — YLR401-RETRACTING
ZLE401-LOADER RAM EXTENDED LIGHT	00091	13	318 — A
ZLR401-LOADER RAM RETRACTED LIGHT	00092	14	319 — G
24SOL- LOADER WATER SPRAY VALVE	00093	15	320
SV406 FIREDOOR SAFETY VALVE	00094	16	321
ML400-LOADER MALFUNCTION LIGHT	00095	17	322 — P
YL403-READY TO LOAD LIGHT	00096	18	323 — G
COMMON		19	
HOT		20	17

SLOT #210

SV405A-ASH REMOVER RAM EXTEND VALVE	00097	1	324
SV405B-ASH REMOVER RAM RETRACT VALVE	00098	2	325
ZLE405-ASH REMOVER RAM EXTENDED LIGHT	00099	3	326 — A
ZLR405-ASH REMOVER RAM RETRACTED LIGHT	00100	4	327 — G
SV404A-TRANSFER RAM EXTEND VALVE	00101	5	328
SV404B-TRANSFER RAM RETRACT VALVE	00102	6	329
ZLE402-TRANSFER RAM EXTENDED LIGHT	00103	7	330 — A
ZLR402-TRANSFER RAM RETRACTED LIGHT	00104	8	331 — G
COMMON		9	
HOT		10	20
25SOL- ASH REMOVER RAM WATER SPRAY VALVE	00105	11	332
	00106	12	
ML401-RAM MALFUNCTION LIGHT	00107	13	333 — P
SV407A-UP PLUNGER SOLENOID VALVE	00108	14	334
SV407B-DOWN PLUNGER SOLENOID VALVE	00109	15	335
	00110	16	
	00111	17	
	00112	18	
COMMON		19	
HOT		20	20

01	ITEM	PART	DESCRIPTION
9	1	1CRA,1CRB, 2CR,3CR,4CR,5CR, 7CR,8CR,9CR	IDEC #RR3B-U-AC120 RELAY
1	2	99100	FEDERAL SIGNAL #350V-120AC HORN
3	3	23,24,25SOL	ASCO #8210C93 SOLENOID VALVE
1	4	ML100	APPLETON #REA-1050 LAMP PACK W/#REA-60-1 GUARD AND SYLVANIA 60W RED BULB
3	5	ML400,LLL401, ML401	DIALCO #103-3101-05-103 SOCKET #103-1331-403 RED LENS SYLVANIA #656-120V LAMP
15	6	YL202,203,206, YL207,YLC401, YLC402,YLE401, YLO401,402, YLR401,ZLE401, ZLE402,405, ZLO401,402	DIALCO #103-3101-05-103 SOCKET #103-1333-403 AMBER LENS SYLVANIA #656-120V LAMP
11	7	YL201,201A,204, YL205,403,404, ZLC401,402, ZLR401,402,405	DIALCO #103-3101-05-103 SOCKET #103-1332-403 GREEN LENS SYLVANIA #656-120V LAMP

NOTES:

1. ALL LIGHTS LOCATED ON MOTOR STARTER BOX DOOR.
2. LOCATED ON SOLID STATE CONTROL PANEL.
3. LOCATED ON TOP OF STARTER CONTROL BOX.
4. LOCATED ON REMOTE ASH CONVEYOR PB STATION.

HYDRAULIC SCHEMATIC IS D-34F-0186

P5185

THIS DRAWING IS THE PROPERTY OF CONSUMAT SYSTEMS, INC. AND IS NOT TO BE USED FOR ANY PURPOSE EITHER FOR CONSUMAT SYSTEMS, INC. OR NOT IN POSSESSION OF WHICH AND IS NOT TO BE PRINTED, REPRODUCED, LOANED OR USED IN ANY WAY WITHOUT WRITTEN PERMISSION OF CONSUMAT SYSTEMS, INC.

DR	B.W.B.	DATE	7/18/94
CHK	B.W.B.	DATE	7/18/94
APP	-	DATE	-
APP	-	DATE	-
ARCHIVE		FILE NO.	
NEXT HIGHER ASSY	-		
DO NOT SCALE			

CONSUMAT SYSTEMS, INC.
RICHMOND, VA. U.S.A.

Schematic
Incinerator System Outputs
Burroughs Wellcome Co.

SCALE	DWG NO	REV
None	D-50-4443	-
REFERENCE 41535	SHEET 13 OF 21	

REV	REVISION	DATE	DR	CHK	APP	APP
-						

02	01	ITEM	PART	DESCRIPTION
	2	1	LLL402,ML402	DIALCO #103-3101-05-103 SOCKET #103-1331-403 RED LENS SYLVANIA #6S6-120V LAMP

SLOT #211

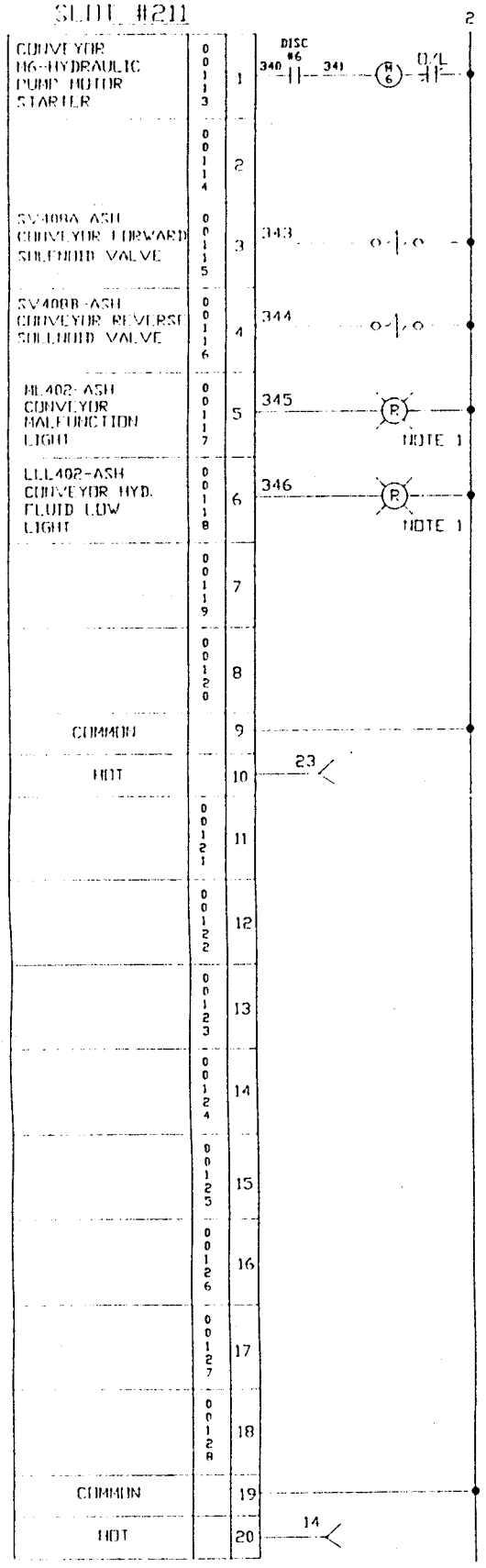

NOTES:

1. LOCATED ON REMOTE ASH CONVEYOR PB STATION.
2. ALL LIGHTS LOCATED ON MOTOR STARTER BOX, UOS.

HYDRAULIC SCHEMATIC IS D-34F-0186

P5185

THIS DRAWING IS THE PROPERTY OF CONSUMAT SYSTEMS, INC. AND IS TO BE USED ONLY FOR PRODUCING ITEMS ON ORDER FOR CONSUMAT SYSTEMS, INC. SUBJECT TO RETURN UPON DEMAND AND IS NOT TO BE PRINTED, ENCLOSURE OR REPRODUCED, LOANED OR USED IN ANY WAY WITHOUT WRITTEN PERMISSION OF CONSUMAT SYSTEMS, INC.

DR B.K.B.	DATE 7/23/94
CHK B.W.B.	DATE 7/23/94
APP -	DATE -
APP -	DATE -
ARCHIVE -	PROJ NO. -
NEXT HIGHER ASSY -	
DO NOT SCALE	

CONSUMAT SYSTEMS, INC.
RICHMOND, VA. U.S.A.

TITLE
Schematic
Incinerator System Outputs
Burroughs Wellcome Co.

SCALE	DWG. NO.	REV.
None	D-50-4443	-
REFERENCE 41536	SHEET 14 OF 21	

REV	REVISION	DATE	DR	CHK	APP	APP
-	-	-	-	-	-	-

02	01	ITEM	PART	DESCRIPTION

SLOT # 301

292 M4 AUX 2	1	1 0 0 6 5	BURNER BLOWER ON
	2		
292 M4 AUX 2	3	1 0 0 6 6	BURNER BLOWER MALFUNCTION
	4		
271 M1 AUX 2	5	1 0 0 6 7	UPPER BLOWER ON
	6		
271 M1 AUX 2	7	1 0 0 6 8	UPPER BLOWER MALFUNCTION
	8		
9, 10, 11, 12 NOT USED			
289 M3 AUX 2	13	1 0 0 6 9	LOWER BLOWER ON
	14		
289 M3 AUX 2	15	1 0 0 7 0	LOWER BLOWER MALFUNCTION
	16		
267 M7 AUX 2	17	1 0 0 7 1	FUEL OIL PUMP ON
	18		
267 M7 AUX 2	19	1 0 0 7 2	FUEL OIL PUMP MALFUNCTION
	20		

NOTE 2

368 N NOTE 2	21	1 0 0 7 3	LEH801-LIME SILO HIGH LEVEL SENSOR NOTE 1 AUX. CONTACT
	22		
369 N	23	1 0 0 7 4	LEM801-LIME SILO MID LEVEL SENSOR NOTE 1 AUX. CONTACT
	24		
370 N	25	1 0 0 7 5	LEL801-LIME SILO LOW LEVEL SENSOR NOTE 1 AUX. CONTACT
	26		
371 N	27	1 0 0 7 6	HS801-LIME SILO UNLOADING CONTROLS OFF / ON NOTE 1 AUX. CONTACT
	28		
29, 30, 31, 32 NOT USED			
372 N	33	1 0 0 7 7	HS803-LIME SILO UNLOADING CONTRULS EMERGENCY STOP NOTE 1 AUX. CONTACT
	34		
	35	1 0 0 7 8	
	36		
	37	1 0 0 7 9	
	38		
14 375 12	39	1 0 0 8 0	FUEL OIL LEVEL NOTE 3
	40		

MODICON #AS-B817-116

SLOT # 302

1001 2	1	1 0 0 8 1	COOLING POWER ON
	2		
1004 2	3	1 0 0 8 2	COOLING PUMP #1 ON
	4		
1005 2	5	1 0 0 8 3	COOLING PUMP #1 FAIL
	6		
1008 2	7	1 0 0 8 4	COOLING PUMP #2 ON
	8		
9, 10, 11, 12 NOT USED			
1009 2	13	1 0 0 8 5	COOLING PUMP #2 FAIL
	14		
1014 2	15	1 0 0 8 6	COOLING FAN ON
	16		
1015 2	17	1 0 0 8 7	COOLING FAN FAIL
	18		
1016 2	19	1 0 0 8 8	COOLING WATER SUPPLY PRESSURE LOW
	20		
1017 2	21	1 0 0 8 9	COOLING MAKE UP WATER HIGH FLOW
	22		
1018 2	23	1 0 0 9 0	COOLING CIRCULATING WATER LOW FLOW
	24		
1019 2	25	1 0 0 9 1	COOLING HIGH TEMPERATURE FLOW DIVERT
	26		
2	27	1 0 0 9 2	COOLING SPARE
	28		
29, 30, 31, 32 NOT USED			
2	33	1 0 0 9 3	COOLING SPARE
	34		
	35	1 0 0 9 4	
	36		
	37	1 0 0 9 5	
	38		
	39	1 0 0 9 6	
	40		

MODICON #AS-B817-116

SLOT # 303

107 M11 AUX 2000	1	1 0 0 9 7	QUENCH WATER PUMP #1 ON
	2		
107 M11 AUX 2000	3	1 0 0 9 8	QUENCH WATER PUMP #1 MALFUNCTION
	4		
108 M12 AUX 2000	5	1 0 0 9 9	QUENCH WATER PUMP #2 ON
	6		
108 M12 AUX 2000	7	1 0 1 0 0	QUENCH WATER PUMP #2 MALFUNCTION
	8		
9, 10, 11, 12 NOT USED			
384 #1 REM AUX 2	13	1 0 1 0 1	AIR COMPRESSOR ON K6
	14		
384 #1 REM AUX 2	15	1 0 1 0 2	AIR COMPRESSOR MALFUNCTION K7
	16		
25 #2 REM AUX 2	17	1 0 1 0 3	COMP. AIR DRYER ON K10
	18		
25 #2 REM AUX 2	19	1 0 1 0 4	COMP. AIR DRYER MALFUNCTION K8
	20		
106 M10 AUX 2000	21	1 0 1 0 5	I.D. FAN ON
	22		
106 M10 AUX 2000	23	1 0 1 0 6	I.D. FAN MALFUNCTION
	24		
122 M24 2000	25	1 0 1 0 7	PREHEAT FAN ON
	26		
122 M24 2000	27	1 0 1 0 8	PREHEAT FAN MALFUNCTION
	28		
29, 30, 31, 32 NOT USED			
124 M26 2000	33	1 0 1 0 9	HEAT EXCH. CLEANER ON
	34		
	35	1 0 1 1 0	
	36		
	37	1 0 1 1 1	
	38		
	39	1 0 1 1 2	
	40		

MODICON #AS-B817-116

NOTES:

1. FROM LIME STORAGE AND DELIVERY SYSTEM.
2. HOT (R) AND NEUTRAL (N) FROM SUPPLIED 120 VOLT AC USED ON LIME SYSTEM.
3. OIL LEVEL CUSTOMER SUPPLIED OIL LEVEL SWITCH LOCATED ON FUEL TANK.

P5185

THIS DRAWING IS THE PROPERTY OF CONSUMAT SYSTEMS, INC. AND IS TO BE USED ONLY FOR POSITIONING ITEMS OR WORK FOR CONSUMAT SYSTEMS, INC. IT MUST NOT BE LOANED, COPIED OR REPRODUCED, LOANED OR USED IN ANY WAY WITHOUT WRITTEN PERMISSION OF CONSUMAT SYSTEMS, INC.

REV	REVISION	DATE	DR	CHK	APP	APP
C	2000 CRS	5/26/95	BWB	KAB	–	–
B	122 CR	2.08.95	BWB	KAB	–	–
A	OIL LEVEL SWITCH	11/04/94	BWB	KAB	–	–

DR BWB 8/24/94	CONSUMAT SYSTEMS, INC.		
CHK BWB 8/24/94	RICHMOND, VA. U.S.A.		
APP – DATE –	Schematic		
APP – DATE –	System Isolated Inputs		
CHECKED – DESIGNED –	Burroughs Wellcome Co.		
NEXT HIGHER ASSY –	SCALE –	DWG NO D-50-4443	REV C
DO NOT SCALE	REFERENCE –	SHEET 15 OF 21	

SLOT #304

1	10113	SCRUBBER SYSTEM POWER ON	
2	10114	HS701-EMISSIONS CONTROL SYSTEM OFF / ON	401
3	10115	HS703-HEAT EXCHANGE CLEANER HAND / OFF / AUTO NOTE 1 LCP#1	402
4	10116	HS707-PREHEAT FAN HAND / OFF / AUTO NOTE 1 LCP#3	403
5	10117	HS702-HEAT EXCHANGE FANS 1 & 2 HAND / OFF / AUTO NOTE 1 LCP#1	404
6	10118	HS703-HEAT EXCHANGE FANS 3 & 4 HAND / OFF / AUTO NOTE 1 LCP#1	405
7	10119	HS704-HEAT EXCHANGE FANS 5 & 6 HAND / OFF / AUTO NOTE 1 LCP#1	406
8	10120	HS705-HEAT EXCHANGE FANS 7 & 8 HAND / OFF / AUTO NOTE 1 LCP#1	407
9		COMMON	
10		NOT USED	
11	10121	HS706-HEAT EXCHANGE FANS 9 & 10 HAND / OFF / AUTO NOTE 1 LCP#1	408
12	10122	HS711-HEAT EXCHANGER CONVEYOR HAND / OFF / AUTO NOTE 1 LCP#1	409
13	10123	HS713-FABRIC FILTER CONVEYOR HAND / OFF / AUTO NOTE 1 LCP#3	410
14	10124	HS716-TRANSFER CONVEYOR HAND / OFF / AUTO NOTE 1 C.S.I. REMOTE	411
15	10125	HS714-RECIRCULATION CONVEYOR HAND / OFF / AUTO NOTE 1 LCP#3	412
16	10126	HS712-CONDITIONING DRUM HAND / OFF / AUTO NOTE 1 LCP#3	413
17	10127	HS715-ASH DISCHARGE ROTARY VALVE LCP#3 SELECTOR SWITCH HAND/OFF/AUTO NOTE 1	414
18	10128		
19		COMMON	
20		NOT USED	

MODICON #AS-B805-016

SLOT #305

1	10129	HS708-BAG CLEANER MODULE 1 AUTO HAND / OFF / AUTO NOTE 1 LCP #2
2	10130	HS708-BAG CLEANER MODULE 1 HAND HAND / OFF / AUTO NOTE 1 LCP #2
3	10131	HS709-BAG CLEANER MODULE 2 AUTO HAND / OFF / AUTO NOTE 1 LCP #2
4	10132	HS709-BAG CLEANER MODULE 2 HAND HAND / OFF / AUTO NOTE 1 LCP #2
5	10133	HS710-BAG CLEANER MODULE 3 AUTO HAND / OFF / AUTO NOTE 1 LCP #2
6	10134	HS710-BAG CLEANER MODULE 3 HAND HAND / OFF / AUTO NOTE 1 LCP #2
7	10135	
8	10136	
9		COMMON
10		NOT USED
11	10137	SS701-HEAT EXCHANGE CLEANER SPEED SWITCH NOTE 2
12	10138	SS702-HEAT EXCHANGE CONVEYOR SPEED SWITCH NOTE 2
13	10139	SS703-CONDITIONING DRUM SPEED SWITCH NOTE 2
14	10140	SS704-FABRIC FILTER CONVEYOR SPEED SWITCH NOTE 2
15	10141	SS705-ROTARY VALVE SPEED SWITCH NOTE 2
16	10142	SS706-RECIRCULATION CONVEYOR SPEED SWITCH NOTE 2
17	10143	SS707-TRANSFER CONVEYOR SPEED SWITCH NOTE 2
18	10144	
19		COMMON
20		NOT USED

MODICON #AS-B805-016

SLOT #306

1	10145	ZSC201 BYPASS CLOSED LIMIT SWITCH
2	10146	ZSO201 BYPASS OPEN LIMIT SWITCH
3	10147	PSL601 QUENCH NOZZEL AIR PRESSURE LOW SWITCH NOTE 3
4	10148	PSL602 AIR TANK AIR PRESSURE LOW SWITCH NOTE 3
5	10149	ZSC601 PURGE AIR CLOSED LIMIT SWITCH
6	10150	ZSO601 PURGE AIR OPEN LIMIT SWITCH
7	10151	ZSC701 I.D. DAMPER CLOSED LIMIT SWITCH
8	10152	ZSO701 I.D. DAMPER OPEN LIMIT SWITCH
9		COMMON
10		NOT USED
11	10153	FS701 LIME FLOW SWITCH LIME LINE #1 NOTE 4
12	10154	FS702 LIME FLOW SWITCH LIME LINE #2 NOTE 4
13	10155	ML703 BAG BREAK DETECTOR NOTE 5
14	10156	YE701 BAG FILTER EXIT DETECTOR NOTE 5
15	10157	PSL701 COMPRESSED AIR SUPPLY LOW SWITCH NOTE 6
16	10158	LSH701- HOPPER HIGH LEVEL SWITCH
17	10159	CEM CALIBRATE CALIBRATION - IN - PROGRESS (CLOSES)
18	10160	CEM OFF/FAULT OPENS IF OFF OR FAULT
19		COMMON
20		NOT USED

MODICON #AS-B805-016

SLOT #307

1	10161	TLC704-ELECTRIC AIR HEATER LOW TEMPERATURE NOTE 8
2	10162	TLC704-ELECTRIC AIR HEATER HIGH TEMPERATURE NOTE 8
3	10163	
4	10164	ZSC702- SCRUBBER INLET VALVE CLOSED LIMIT SWITCH
5	10165	ZSO702- SCRUBBER INLET VALVE OPEN LIMIT SWITCH
6	10166	ZSC704- PREHEAT INLET VALVE CLOSED LIMIT SWITCH
7	10167	ZSO704- PREHEAT INLET VALVE OPEN LIMIT SWITCH
8	10168	ZSC705- PREHEAT OUTLET VALVE CLOSED LIMIT SWITCH
9		COMMON
10		NOT USED
11	10169	ZSO705- PREHEAT OUTLET VALVE OPEN LIMIT SWITCH
12	10170	PREHEAT HEATERS TEMP. CONTROL PANEL
13	10171	HEAT EXCHANGE SCREW CONVEYORS TEMP. CONTROL
14	10172	RECIR. SCREW & COND. DRUM HEATERS TEMP. CONTROL
15	10173	FAB. FILTER SCREW CONV. HEATERS & FAB. FILTER HOPPER HEATERS TEMP. CONTR.
16	10174	
17	10175	
18	10176	
19		COMMON
20		NOT USED

MODICON #AS-B805-016

02	01	ITEM	PART	DESCRIPTION
	9	1	HS707,708,709, HS710,711,712, HS713,714,715 HS716	A-B #R001-J2A SELECTOR SW.
	2	2	HS701,703	A-B #R001-H2A SELECTOR SW.
	5	3	HS702,703,704 HS705,706	A-B #R001-J2A SELECTOR SW. W/ #R001-XA CONTACT BLOCK
	6	4	LSC201,601,701, LSO201,601,701,	MICRO #LSA7L LIMIT SWITCH W/ #LS2-52D ROLLER ARM
	3	5	PSL601,602,701	BARKSDALE #D2612-3 PRESSURE SW.
	1	6	ZLC201	DIALCO #103-3101-05-103 SOCKET W/ #103-1332-403 GREEN LEDS & W/ SYLVANIA #656 120V LAMP
	1	7	ZLO201	DIALCO #103-3101-05-103 SOCKET W/ #103-1333-403 AMBER LEDS & W/ SYLVANIA #656 120V LAMP

BYPASS CLOSED ZLC201

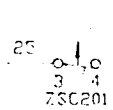

BYPASS OPEN ZLO201

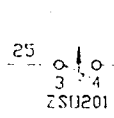

NOTES:

1. LOCATED ON REMOTE "LOCAL" PANEL.
2. LOCATED ON MOTOR PER NAME.
3. LOCATED ON AIR / WATER SKID.
4. FROM LIME FLOW SWITCH.
5. FROM BAG BREAK DETECTOR.
6. AIR LINE TO FABRIC FILTER.
7. FROM CEM CABINET.
8. FROM ELECTRIC AIR HEATER, AUX. CONTACT.
9. FROM INTEREL SCRUBBER.

P5185

REV		DESCRIPTION	DATE	DR	CHK	APP	APP
D		10170,10171,10172,10173 ADDED INPUTS	3/13/95	B.K.B.	P.K.B.	-	-
C		10158,10164,10165,10166,10167,10168,10169 ADDED INPUTS	3/13/95	B.K.B.	P.K.B.	-	-
B		10139,10140 NAMES	2/08/95	B.K.B.	P.K.B.	-	-
A		REVISIONS RELEASED	11/18/94	B.K.B.	P.K.B.	-	-

THIS DRAWING IS THE PROPERTY OF CONSUMAT SYSTEMS, INC. AND IS TO BE USED ONLY FOR PURPOSES FOR CONSUMAT SYSTEMS, INC. IT IS NOT TO BE RETURN UPON DEMAND AND IS NOT TO BE COPIED, PHOTOGRAPHED, TRACED, REPRODUCED, LOANED OR USED IN ANY WAY WITHOUT WRITTEN PERMISSION OF CONSUMAT SYSTEMS, INC.

DR	B.K.B.	DATE 9/23/94
CHK	B.K.B.	DATE 9/23/94
APP	-	DATE -
APP	-	DATE -
ARCHIVE	F860 MS	
NEXT HIGHER ASSY	-	
DO NOT SCALE	-	

CONSUMAT SYSTEMS, INC.
RICHMOND, VA. U.S.A.

Schematic
Scrubber System Inputs
Burroughs Wellcome Co.

SCALE	DWG NO	REV
None	D-50-4443	D
REFERENCE 41534	SHEET 16 OF 21	

SLOT #308

1	0012	1	475
2	0013	2	476
3	0013	3	477
4	0013	4	478
5	0013	5	
6	0013	6	480
7	0013	7	481
8	0013	8	482
9		9	
10		10	25
11	0013	11	483
12	0013	12	
13	0013	13	
14	0014	14	
15	0014	15	
16	0014	16	488
17	0014	17	489
18	0014	18	
19		19	
20		20	25

11CR- PURGE AIR RELAY

SV600 AIR TANK PURGE SOLENOID

SV601- QUENCH WATER SOLENOID

SV602- QUENCH AIR SOLENOID

12CR- LINE FEED INTERLOCK RELAY

SV700- FABRIC FILTER LINE CLEANER SOLENOID

SV701- FABRIC FILTER VIBRATOR SOLENOID

COMMON

HOT

SV702- BY-PASS CLOSE SOLENOID

SCRUBBER DAMPERS INPUT / OUTPUT SOLENOID VALVES 1 & 2

NOTE 1

PREHEAT DAMPERS INPUT / OUTPUT SOLENOID VALVES 3 & 4

NOTE 1

COMMON

HOT

MODICON #AS-B804-016

SLOT #309

1	0014	1	491
2	0014	2	492
3	0014	3	493
4	0014	4	494
5	0014	5	495
6	0015	6	496
7	0015	7	
8	0015	8	
9		9	
10		10	25
11	0015	11	
12	0015	12	
13	0015	13	
14	0015	14	
15	0015	15	
16	0015	16	
17	0015	17	
18	0016	18	
19		19	
20		20	25

FABRIC FILTER #1 MODULE PULSING #1 SOL. VALVE

FABRIC FILTER #1 MODULE PULSING #2 SOL. VALVE

FABRIC FILTER #1 MODULE PULSING #3 SOL. VALVE

FABRIC FILTER #1 MODULE PULSING #4 SOL. VALVE

FABRIC FILTER #1 MODULE PULSING #5 SOL. VALVE

FABRIC FILTER #1 MODULE PULSING #6 SOL. VALVE

COMMON

HOT

MODICON #AS-B804-016

SLOT #310

1	0016	1	507
2	0016	2	508
3	0016	3	509
4	0016	4	510
5	0016	5	511
6	0016	6	512
7	0016	7	
8	0016	8	
9		9	
10		10	25
11	0016	11	
12	0017	12	
13	0017	13	
14	0017	14	
15	0017	15	
16	0017	16	
17	0017	17	
18	0017	18	
19		19	
20		20	25

FABRIC FILTER #2 MODULE PULSING #1 SOL. VALVE

FABRIC FILTER #2 MODULE PULSING #2 SOL. VALVE

FABRIC FILTER #2 MODULE PULSING #3 SOL. VALVE

FABRIC FILTER #2 MODULE PULSING #4 SOL. VALVE

FABRIC FILTER #2 MODULE PULSING #5 SOL. VALVE

FABRIC FILTER #2 MODULE PULSING #6 SOL. VALVE

COMMON

HOT

MODICON #AS-B804-016

SLOT #311

1	0017	1	523
2	0017	2	524
3	0017	3	525
4	0018	4	526
5	0018	5	527
6	0018	6	528
7	0018	7	
8	0018	8	
9		9	
10		10	25
11	0018	11	
12	0018	12	
13	0018	13	
14	0018	14	
15	0018	15	
16	0018	16	
17	0018	17	
18	0019	18	
19		19	
20		20	25

FABRIC FILTER #3 MODULE PULSING #1 SOL. VALVE

FABRIC FILTER #3 MODULE PULSING #2 SOL. VALVE

FABRIC FILTER #3 MODULE PULSING #3 SOL. VALVE

FABRIC FILTER #3 MODULE PULSING #4 SOL. VALVE

FABRIC FILTER #3 MODULE PULSING #5 SOL. VALVE

FABRIC FILTER #3 MODULE PULSING #6 SOL. VALVE

COMMON

HOT

MODICON #AS-B804-016

I.D.	QTY	ITEM	PART	DESCRIPTION
02	01	1	12CR,12CR	IDEC #RR3B-U-AC120 RELAY
	2	2	11CR	TIMER #6284A1022 MIDDINGTON METER

PURGE AIR BLOWER MOTOR STARTER 11CR

11CR 539 — 2 CLOSE — 2

540 — R 24 VAC — 11CR

11CR 541 — 1 OPEN — 1

25

11CR 542 — 2 — 4 — 424 — PURGE AIR SOLENOID

543 — 12CR — LINE FEED INTERLOCK

NOTES:

1. SEE FOLLOWING SHEETS FOR SCHEMATICS FOR COMPUTER, I/O, INPUT AND I/O MODULE.

P5185

THIS DRAWING IS THE PROPERTY OF CONSUMAT SYSTEMS, INC. AND IS NOT TO BE USED, COPIED, REPRODUCED OR LOANED FOR USE IN ANY WAY WITHOUT WRITTEN PERMISSION OF CONSUMAT SYSTEMS, INC.

REV	DESCRIPTION	DATE	BY	CHK	APP
B	SOLS. 7-16 ADDED TO ALL 3 MODULES	5.12.95	BAB		
A	UV9,12CP ADDED	1.09.95	BAB		

CONSUMAT SYSTEMS, INC.
RICHMOND, VA. U.S.A.

Schematic
Scrubber System Outputs
Burroughs Wellcome Co.

SCALE	DWG. NO.	REV
NONE	D-50-4443	B
REFERENCE 11535	SHEET 17 OF 21	

DO NOT SCALE

02	01	ITEM	PART	DESCRIPTION

SLOT # 404

CASE GROUND			1	
CURRENT INPUT 1	3	2		719
INPUT 1+	0	3		
INPUT 1-	0	4		720 UPPER CHAMBER #1 TEMPERATURE
SHIELD 1	1		5	
CURRENT INPUT 2	3	6		
INPUT 2+	0	7		722
INPUT 2-	0	8		723 UPPER CHAMBER #2 TEMPERATURE
SHIELD 2	2		9	
CURRENT INPUT 3	3	10		
INPUT 3+	0	11		727
INPUT 3-	0	12		728 UPPER CHAMBER #2 ALARM TEMPERATURE
SHIELD 3	3		13	
CURRENT INPUT 4	3	14		
INPUT 4+	0	15		732
INPUT 4-	0	16		733 LOWER CHAMBER TEMPERATURE
SHIELD 4	4		17	
18,19,20 N.C.				

SLOT # 405

CASE GROUND			1	
CURRENT INPUT 1	3	2		788
INPUT 1+	0	3		
INPUT 1-	0	4		789 HEAT EXCHANGE OUTLET TEMPERATURE
SHIELD 1	9		5	
CURRENT INPUT 2	3	6		
INPUT 2+	0	7		739
INPUT 2-	0	8		740 QUENCH CHAMBER EXIT TEMPERATURE
SHIELD 2	1		9	
CURRENT INPUT 3	3	10		
INPUT 3+	0	11		783
INPUT 3-	0	12		784 QUENCH WATER PRESSURE
SHIELD 3	1		13	
CURRENT INPUT 4	3	14		=
INPUT 4+	0	15		=
INPUT 4-	0	16		
SHIELD 4	1		17	
18,19,20 N.C.	2			

SLOT # 406

CASE GROUND			1	
CURRENT INPUT 1	3	2		810
INPUT 1+	0	3		
INPUT 1-	1	4		811 NATURAL GAS FLOW
SHIELD 1	7		5	
CURRENT INPUT 2	3	6		
INPUT 2+	0	7		815
INPUT 2-	0	8		816 FUEL OIL FLOW
SHIELD 2	1		9	
CURRENT INPUT 3	8	10		
INPUT 3+	3	11		=
INPUT 3-	0	12		=
SHIELD 3	1		13	
CURRENT INPUT 4	9	14		
INPUT 4+	3	15		=
INPUT 4-	0	16		=
SHIELD 4	2		17	
18,19,20 N.C.	0			

CONNECTOR #1

N.C.			21	
CURRENT INPUT 5	3	22		775
INPUT 5+	0	23		
INPUT 5-	0	24		776 LOWER CHAMBER DRAFT
SHIELD 5	5		25	
CURRENT INPUT 6	3	26		
INPUT 6+	0	27		768
INPUT 6-	0	28		769 LOWER CHAMBER UNDERFIRE AIR PRESSURE
SHIELD 6	6		29	
CURRENT INPUT 7	3	30		
INPUT 7+	0	31		773
INPUT 7-	0	32		774 UPPER CHAMBER AIR SUPPLY PRESSURE
SHIELD 7	7		33	
CURRENT INPUT 8	3	34		
INPUT 8+	0	35		778
INPUT 8-	0	36		779 HEAT EXCHANGE INLET TEMPERATURE
SHIELD 8	8		37	
V REF +			38	
V REF -			39	
CASE GROUND			40	

MODICON #AS-B875-111

CONNECTOR #2

N.C.			21	
CURRENT INPUT 5	3	22		752
INPUT 5+	0	23		
INPUT 5-	1	24		753 I.D. FAN INLET TEMPERATURE
SHIELD 5	3		25	
CURRENT INPUT 6	3	26		
INPUT 6+	0	27		805
INPUT 6-	0	28		806 BAGHOUSE DIFF. PRESSURE
SHIELD 6	4		29	
CURRENT INPUT 7	3	30		
INPUT 7+	0	31		800
INPUT 7-	0	32		801 QUENCH WATER FLOW
SHIELD 7	5		33	
CURRENT INPUT 8	3	34		=
INPUT 8+	0	35		=
INPUT 8-	0	36		
SHIELD 8	6		37	
V REF +			38	
V REF -			39	
CASE GROUND			40	

MODICON #AS-B875-111

CONNECTOR #2

N.C.			21	
CURRENT INPUT 5	3	22		=
INPUT 5+	0	23		
INPUT 5-	2	24		=
SHIELD 5	1		25	
CURRENT INPUT 6	3	26		
INPUT 6+	0	27		820 CEM CO
INPUT 6-	2	28		821
SHIELD 6	2		29	
CURRENT INPUT 7	3	30		
INPUT 7+	0	31		825 CEM O2
INPUT 7-	2	32		826
SHIELD 7	3		33	
CURRENT INPUT 8	3	34		
INPUT 8+	0	35		
INPUT 8-	2	36		
SHIELD 8	4		37	
V REF +			38	
V REF -			39	
CASE GROUND			40	

MODICON #AS-B875-111

NOTES:

REFERENCE SHS. 19-21 FOR INSTRUMENTATION.

P5185

THIS DRAWING IS THE PROPERTY OF CONSUMAT SYSTEMS, INC. AND IS TO BE USED ONLY FOR PRINTING ITEMS ORDERED FROM CONSUMAT SYSTEMS, INC. IT IS NOT TO BE LOANED UPON DEMAND AND IS NOT TO BE COPIED, PHOTOGRAPHED, TRACED, REPRODUCED, LOANED OR USED IN ANY WAY WITHOUT WRITTEN PERMISSION OF CONSUMAT SYSTEMS, INC.

DR BXB	DATE 10/07/94	CONSUMAT SYSTEMS, INC.	
CHK BXB	DATE 10/07/94	RICHMOND, VA. U.S.A.	
APP	DATE	Schematic	
APP	DATE	Analog I/O	
RELEASE BXB 10/07/94		Burroughs Wellcome Co.	
NEXT HIGHER ASSY			
SCALE DO NOT SCALE		DWG NO D-50-4443	REV A
REFERENCE		SHEET 18 OF 21	

REV		DATE	DR	CHK	APP	APP
A	JUMPERS REVISED	12/14/94	BXB	BXB	-	-

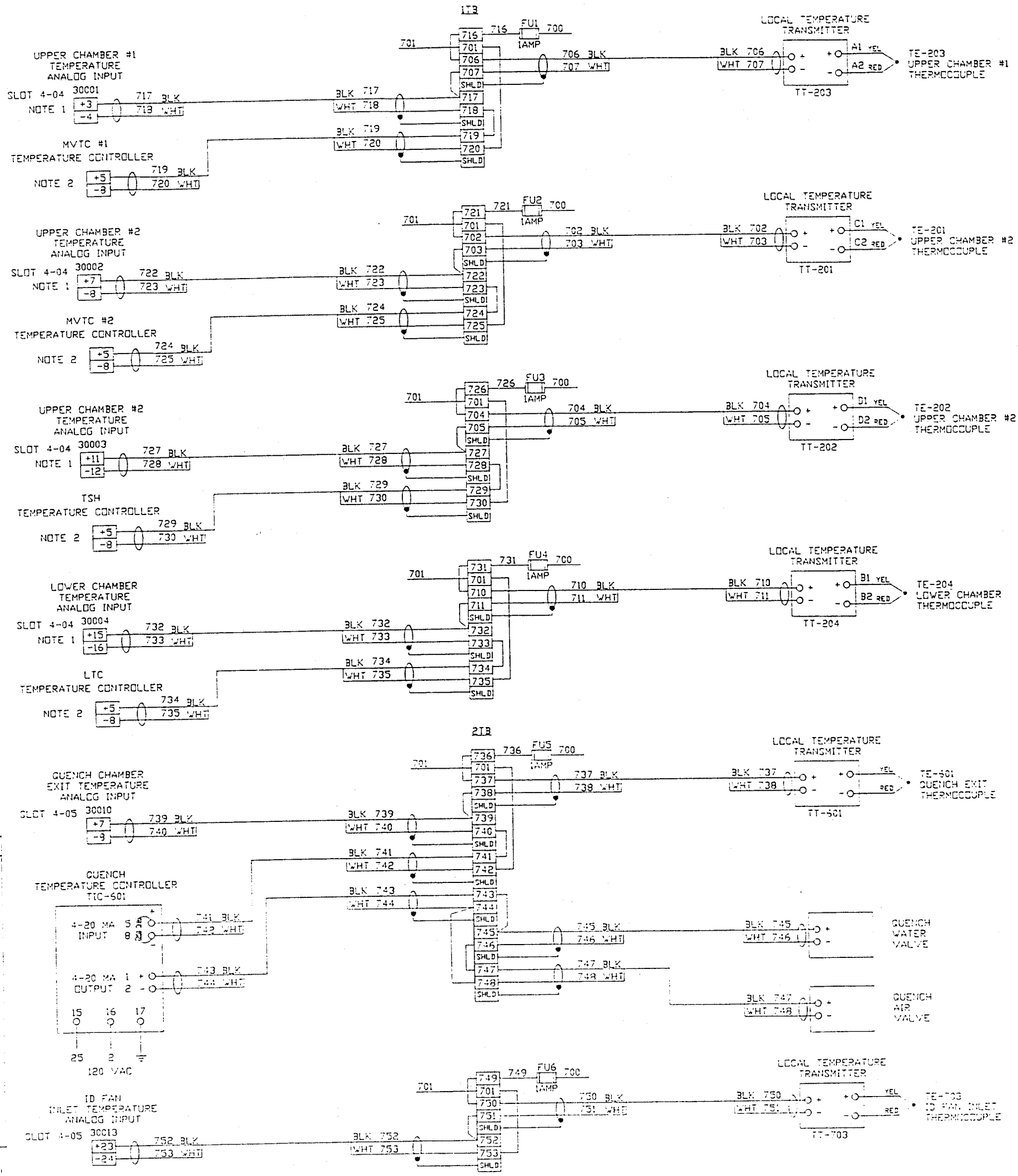

ITEM	PART	DESCRIPTION
1	TIC601	CONSUMAT MULTI CONTROLLER
2	TT201-204	ASSEMBLY, #11723-0000 TRANS.
3	TT601	ASSEMBLY, #04441-2010425 TRANS.
4	TT703	ASSEMBLY, #04441-2010425 TRANS.
5	TE201-203	H/W #5A10812-1 THERMOCOUPLE
6	TE601	H/W #2,5114-612-1 THERMOCOUPLE
	TE703	
	TE204	H/W #5A10812-1-111-B2 THERMOCOUPLE

NOTES:

1. LOCATIONS MARKED SLOT 4-04 (SEE PG. 18)
2. LOCATIONS TEMPERATURE CONTROLLER PINS AS SHOWN. (SEE PAGE 18)
3. CONNECT ALL SHIELD TERMINALS TOGETHER, THEN RUN ONE WIRE TO THE ISOLATED SHIELD BUS.

P5185

CONSUMAT SYSTEMS, INC.
RICHMOND, VA. U.S.A.

Schematic
Analog
Burroughs Wellcome Co.

D-50-4443

SHEET 19 OF 21

DO NOT SCALE

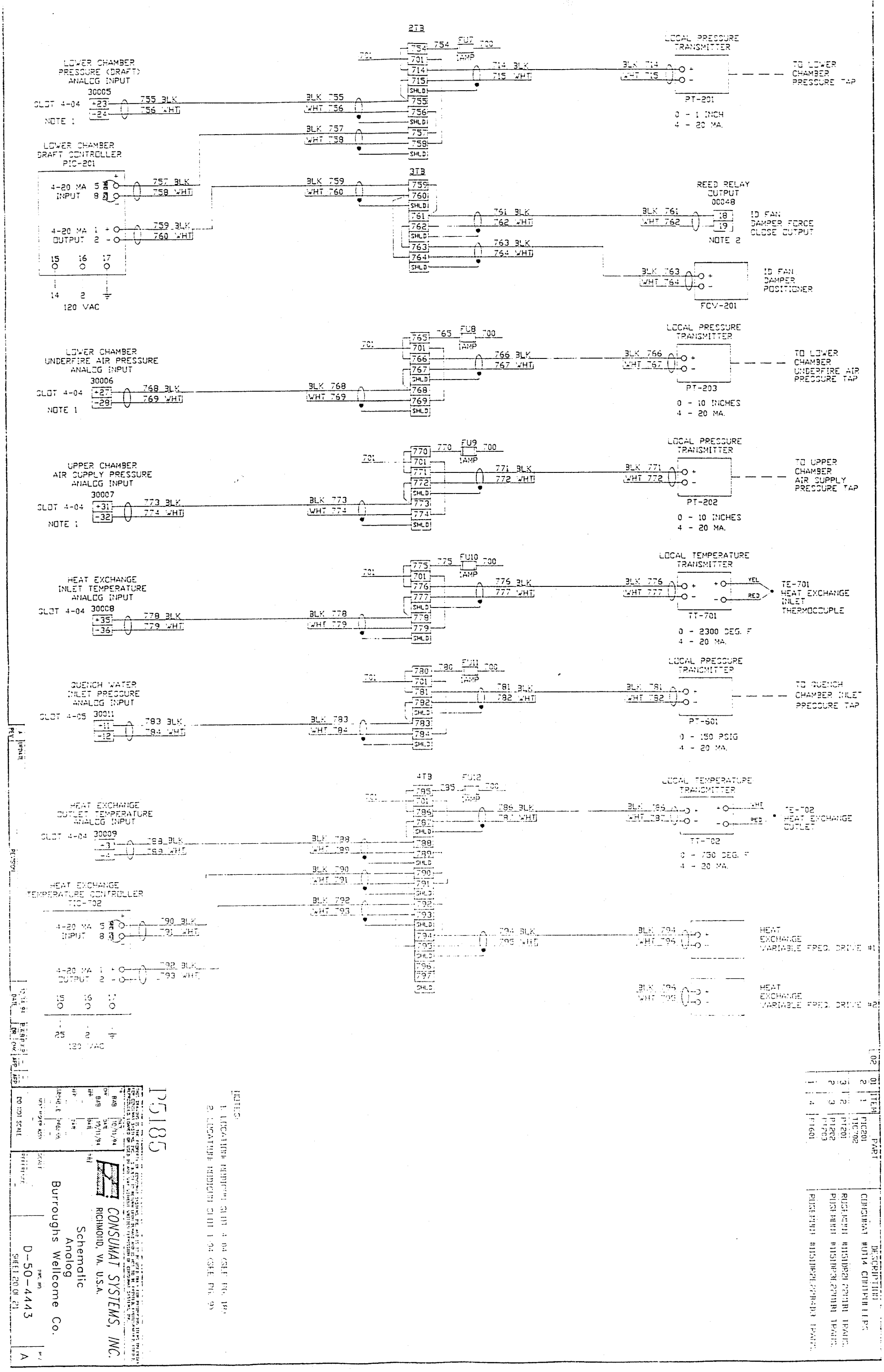

NOTES:
1. LOCATION MODIFIED SLOT 4-04 (SEE PG. 18)
2. LOCATION MODIFIED SLOT 1-04 (SEE PG. 9)

P5185

CONSUMAT SYSTEMS, INC.
RICHMOND, VA. U.S.A.
Schematic
Analog
Burroughs Wellcome Co.
D-50-4443
SHEET 20 OF 21
A

02	01	ITEM	PART	DESCRIPTION
	2	1	PIC201 TIC702	CONSUMAT #UT14 CONTROLLERS
	3	2	PT201	RUSEMOUT #1151DR2E22M1B1 TRANS.
	2	3	PT202 PT203	RUSEMOUT #1151DR3E22M1B1 TRANS.
	1	4	PT601	RUSEMOUT #1151DR2E22B4D3 TRANS.

SIB

QUENCH WATER FLOW
ANALOG INPUT
30015
SLOT 4-05
NOTE 1

+31	800 BLK	
-32	801 WHT	

701 797 FUS5 700
701 798 TAMP
798 BLK
799 WHT
799 SHLD
800 SHLD
801 SHLD
BLK 798
WHT 799
FT/FE-601
0 - 15 GPM
4 - 20 MA.
BLK 800
WHT 801
QUENCH WATER FLOW
SENSOR/INDICATING
TRANSMITTER

BAGHOUSE
DIFF. PRESSURE
ANALOG INPUT
30014
SLOT 4-05
NOTE 1

+27	805 BLK	
-28	806 WHT	

701 902 FUS3 700
701 902
701 903 TAMP
903 SHLD
904 SHLD
905 SHLD
BLK 903
WHT 904
BLK 905
WHT 906
LOCAL PRESSURE
TRANSMITTER
W/ INDICATOR
PDIT-701
0 - 10 INCHES H2O
4 - 20 MA.
TO BAGHOUSE
PRESSURE
TAPS

GAS FLOW
ANALOG INPUT
30017
SLOT 4-06
NOTE 1

+3	810 BLK	
-4	811 WHT	

701 807 FUS4 700
701 807
701 808 TAMP
808 SHLD
809 SHLD
810 SHLD
BLK 908
WHT 909
BLK 910
WHT 811
GAS FLOW
TRANSMITTER
FE/FT-101
0 - 15,000 CFH
4 - 20 MA.
GAS FLOW
SENSOR/INDICATING
TRANSMITTER

OIL FLOW
ANALOG INPUT
30018
SLOT 4-06
NOTE 1

-7	815 BLK	
-8	816 WHT	

701 912 FUS5 700
701 912
701 813 TAMP
813 SHLD
814 SHLD
815 SHLD
BLK 813
WHT 814
BLK 815
WHT 816
OIL FLOW
TRANSMITTER
FE/FT-102
0 - 4 GPM
4 - 20 MA.
OIL FLOW
SENSOR/INDICATING
TRANSMITTER

SIB

CEM O2
ANALOG INPUT
30023
SLOT 4-06
NOTE 1

+31	825 BLK	
-32	826 WHT	

823 SHLD
824 SHLD
825 SHLD
BLK 823
WHT 824
BLK 825
WHT 826
0 - 25 PERCENT
4 - 20 MA.
CEM O2

CEM CO
ANALOG INPUT
30022
SLOT 4-06
NOTE 1

+27	820 BLK	
-28	821 WHT	

818 SHLD
819 SHLD
820 SHLD
821 SHLD
BLK 818
WHT 819
BLK 820
WHT 821
0 - 100 PPM
4 - 20 MA.
CEM CO
Calibration
In Progress
447
25
SEE
PAGE 16

CEM UNIT
L1
L2 GND
L2
120 VAC
449
25
SEE
PAGE 16
Opens When Fault

LOC	QTY	ITEM	PART	DESCRIPTION
01	1	1	FT/FE601	RCM MI-71-R-15-WX
				FLOW METER/TRANSMITTER
	1	2	PDIT701	ROSEMOUNT #1151DP3S22B1M1 METER/
				TRANSMITTER
	1	3	FE/FT1101	FISHER-PD53100U1
				#305IDP-1-A-5-2-A1-A-B4
		4	FE/FT1102	FLOW METER/TRANSMITTER
				RCM #1X2-71-R-4-X
				FLOW METER/TRANSMITTER

NOTE 1. LOCATION - SEE PAGE 18

P51865

CONSUMAT SYSTEMS, INC.
RICHMOND, VA. U.S.A.
Schematic
Analog
Burroughs Wellcome Co.
D-50-4443
SHEET 21 OF 21
B

QTY	ITEM	PART	DESCRIPTION
1	1	MDS	A-B #1494V-DH633 DISCONNECT SW.
3	2	M100,101,102	C-H #A100NCA MOTOR STARTER
3	3	DISC ALL	C-H #DH361UDK SAFETY SWITCH
3	4		C-H #DS200EK1 SAFETY INTERLOCK
1	5	T100	GE #9T58B53 TRANSFORMER
2	6	100CR-101CR	IDEC #RR3B-U-AC120 RELAY
1	7	SV301-2	ASCO #8210C35 SOLENOID VALVE
1	8	SV301-1	ASCO #8210C34 SOLENOID VALVE
1	9	PSL302	ASCO #SB11A PRESSURE SWITCH
2	10	PSL301	ASCO #TE1021 PRESS. TRANSDUCER
2	11	TSH301	ASCO #SB11A TEMPERATURE SWITCH
2	12	TSH302	ASCO #QL13A1 TEMP. TRANSDUCER
1	13	FSH301	GEMS #FS550-3-641 FLOW SW.
1	14	FSL301	GEMS #FS550-29609 FLOW SW.
7	15	RED LIGHTS	DIALCO #103-1333-403 RED LENS
7	16		DIALCO #103-3101-05-103 SOCKET
7	17		SYLVANIA #6S6-120V BULB
4	18	GREEN LIGHT	DIALCO #103-1332-403 GREEN LENS
4	19		DIALCO #103-3101-05-103 SOCKET
4	20		SYLVANIA #6S6-120V BULB
1	21	1TR	SSAC #TDM120AL TIMER
1	22	HS301	AB #800T-H2A SELECTOR SWITCH

480 VAC
3 PHASE
60 HERZ
15 AMPS

MDS
FU300,301,302
FU303,304,305
M100
100OL
DISC #100
100T1
100T2
100T3
MTR
MAIN COOLING WATER PUMP #1
1 1/2 HP / 2.6 FLA.
FRS-15
FRS-3 1/2
H1025
100L1
100L2
100L3
L1
L2
L3

FU306,307,308
M101
101OL
DISC #101
101T1
101T2
101T3
AUXILIARY COOLING WATER PUMP #2
1 1/2 HP / 2.6 FLA.
101L1
101L2
101L3

FU309,310,311
M102
102OL
DISC #102
102T1
102T2
102T3
COOLING FAN
3 HP / 4.8 FLA.
FRS-6
H1029
102L1
102L2
102L3

FU312,313
103L1
103L3
FRS-3 1/2
H1
H3
H2
H4
T100
1.5KVA
FU314
FRN-10
1000
X1
X2
120 VAC
1001
2

1001 — YL0300 — POWER ON — NOTE 1

PRIMARY PUMP #1 #2
1001 — X00 — 1002 DISC 100 AUX — 1003 — OL — COOLING WATER PUMP #1
100CR 8 5 — M100 AUX — 1004 — YG0301 — PUMP#1 ON — NOTE 1
M100 AUX — 1005 — ML301 — PUMP#1 FAIL — NOTE 1

1001 — HS301 — 00X — 1006 DISC 101 AUX — 1007 — OL — COOLING WATER PUMP #2
100CR 9 6 — M101 AUX — 1008 — YG0302 — PUMP#2 ON — NOTE 1
M101 AUX — 1009 — ML302 — PUMP#2 FAIL — NOTE 1

SYSTEM PRESSURE LOW PRESSURE SWITCH PSL302
1001 — 1010 — 1TR 1 3 — 1011 — LOW PRESS. RELAY
100CR 7 4 — 1010 — SECONDARY PUMP DELAY START TIMER 5 SEC.

COOLING FAN CONTROL TEMPERATURE SWITCH TSH301
1001 — 1012 DISC 102 AUX — 1013 — OL — COOLING FAN
M102 AUX — 1014 — YG0303 — FAN ON — NOTE 1
M102 AUX — 1015 — ML303 — FAN FAIL — NOTE 1

WATER SUPPLY PRESSURE SWITCH PSL301
1016 — PLL301 — WATER SUPPLY PRESSURE LOW — NOTE 1

MAKE UP WATER FLOW FSH301 FIXED .5 GPM
1001 — 1017 — FLH301 — MAKE UP WATER HIGH FLOW — NOTE 1

COOLING WATER INLET FLOW FSL301 FIXED 15 GPM
1018 — FLL301 — CIRCULATING WATER LOW FLOW — NOTE 1

COOLING WATER OUTLET TEMP. TSH302 SET 230°F.
1001 — C NO — 1019 — TLH301 — HIGH TEMPERATURE FLOW DIVERT — NOTE 1

DISC100 AUX — 1020 — DISC101 AUX — 1021 — DISCONNECT BYPASS RELAY
1001 — C NC — 1022 — 101CR — 1023 — SV301-2 — DRAIN VALVE (NO)
SV301-1 — BYPASS VALVE (NO)
2 — NOTE 1

NOTE 1: TO MAIN CONTROL PANEL MODICON INPUT.

P5185

CONSUMAT SYSTEMS, INC.
RICHMOND, VA. U.S.A.

Schematic
Cooling Water
Burroughs Wellcome Co.

D-50-4444

SHEET 1 OF 1

DO NOT SCALE

THIS DRAWING IS THE COPYRIGHTED PROPERTY OF CONSUMAT SYSTEMS, INC. AND IS LOANED SUBJECT TO RETURN UPON REQUEST AND UPON THE EXPRESS AGREEMENT THAT IT SHALL NOT BE REPRODUCED, LOANED OR USED IN ANY WAY WITHOUT WRITTEN PERMISSION OF CONSUMAT SYSTEMS, INC.

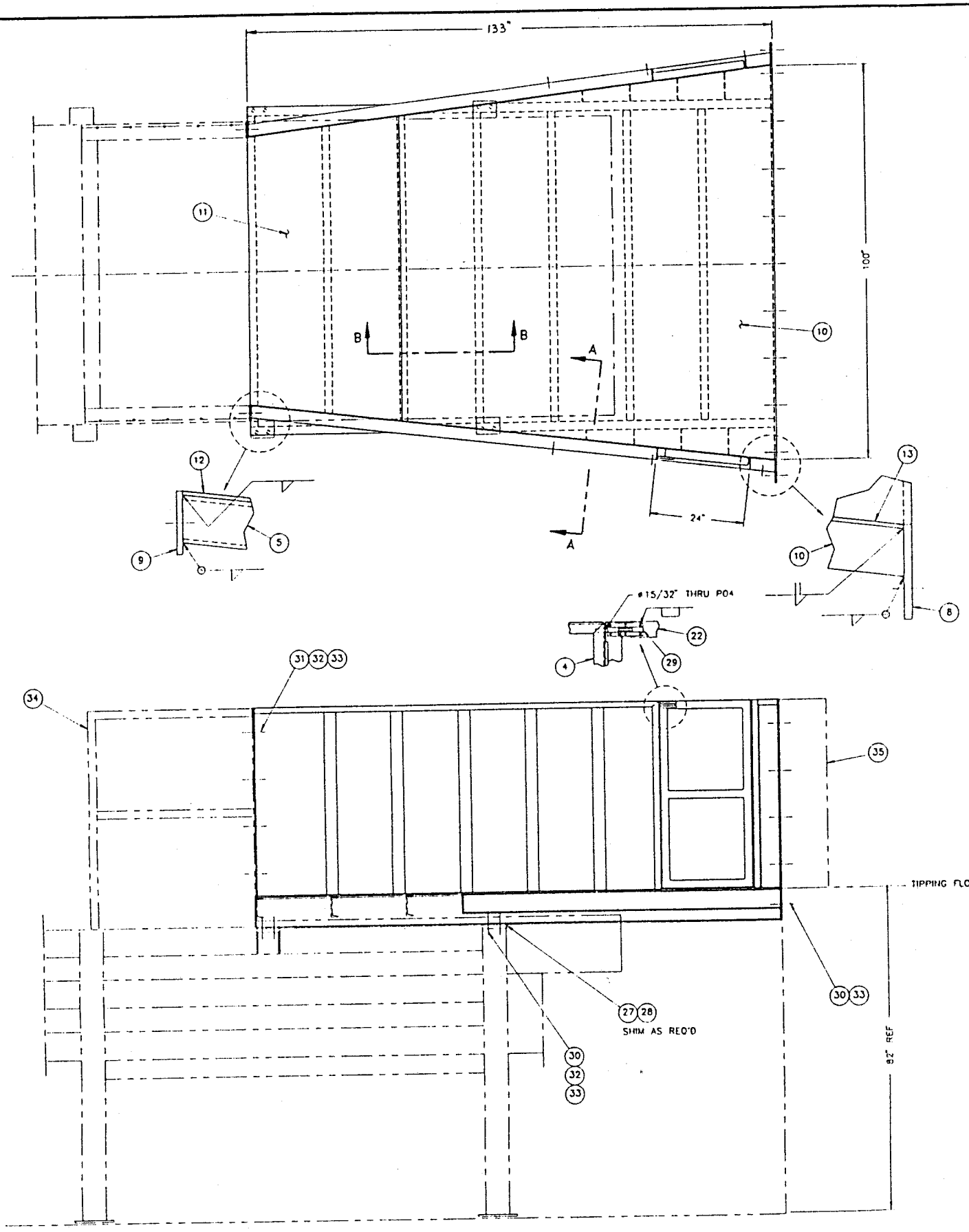

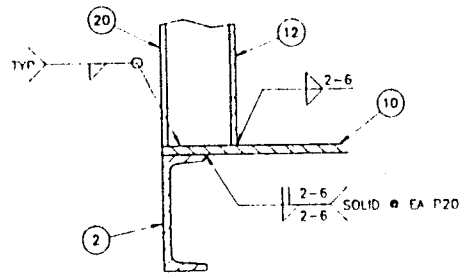

SECTION A-A
3" = 1'-0"

QTY	ITM	PART NUMBER	DESCRIPTION	CUT FROM	
2	1	D-011-0072 P01	C8 X 11.5 X 132 1/2	0.552	01004078
2	2	D-011-0072 P02	C5 X 9.0 X 81¼ TRIM & MITER	0.338	01004059
7	3	D-011-0072 P03	C5 X 9.0 X 78 3/4	0.328	01004059
4	4	D-011-0072 P04	C3 X 4.1 X 47 13/16 (1) MITER	0.199	01004034
2	5	D-011-0072 P05	C3 X 4.1 X 103 1/8 TRIM & MITER (1)R,(1)L	0.430	01004034
2	6	D-011-0072 P06	C3 X 4.1 X 6 1/2 TRIM & MITER (1)R,(1)L	0.027	01004034
1	7	D-011-0072 P07	1/2 X 8 FB X 112	0.467	01001890
2	8	D-011-0072 P08	1/2 X 6 FB X 48 3/8	0.202	01001868
2	9	D-011-0072 P09	3/8 X 4 FB X 48	0.200	01001664
1	10	D-011-0072 P10	3/8 PL 94 1/2 X 106 5/8	0.875	01000412
1	11	D-011-0072 P11	3/8 PL 38 1/2 X 83 1/4	0.696	01000406
2	12	D-011-0072 P12	1/4 PL 48 X 103 1/16	0.859	01000300
2	13	D-011-0072 P13	1/4 PL 6 X 48	0.050	01000300
2	14	D-011-0072 P14	1/4 PL 22 7/8 X 47 3/4	0.237	01000315
2	15	D-011-0072 P15	1/4 PL 4 X 7	0.006	01000315
2	16	D-011-0072 P16	1/4 PL 7 X 7 9/16	0.011	01000315
2	17	D-011-0072 P17	1/4 PL 7 X 9	0.014	01000315
2	18	D-011-0072 P18	1/4 PL 7 X 10 1/2	0.016	01000315
2	19	D-011-0072 P19	1/4 PL 7 X 11 15/16	0.018	01000315
10	20	D-011-0072 P20	L3 X 3 X 1/4 X 46 9/16	0.194	01003062
2	21	D-011-0072 P21	L2 X 2 X 1/4 X 47 1/4 (2) MITERS	0.197	01003034
4	22	D-011-0072 P22	L2 X 2 X 1/4 X 23 (1) MITER, (2)R,(2)L	0.096	01003034
2	23	D-011-0072 P23	L2 X 2 X 1/4 X 19 1/4	0.080	01003034
2	24	D-011-0072 P24	2 X 3/16 WALL SQ TUBE X 47 1/4	0.197	01007302
2	25	D-011-0072 P25	1/8 X 3 HINGE WITH 3/8 PIN X 47 1/4	0.656	01009104
2	26	D-011-0072 P26	3/8 X 3/4 FB X 44 1/2	0.185	01001608
4	27	D-011-0072 P27	16 GA 2 1/2 X 6	0.003	01000161
4	28	D-011-0072 P28	12 GA 2 1/2 X 6	0.003	01000125
2	29	16004210	6" BARREL BLT LOCK W 7/16		
25	30	09001807	3/4-10 X 2 1/2 HEX HEAD BOLT		
8	31	09001805	3/4-10 X 2 HEX HEAD BOLT		
16	32	09004317	3/4-10 HEX NUT		
33	33	09005008	3/4 LOCK WASHER		
REF	34	D-010-0101	ML-561 LOADER ASSEMBLY		
REF	35	C-11A-0039	CORNER GUARD ASSEMBLY		

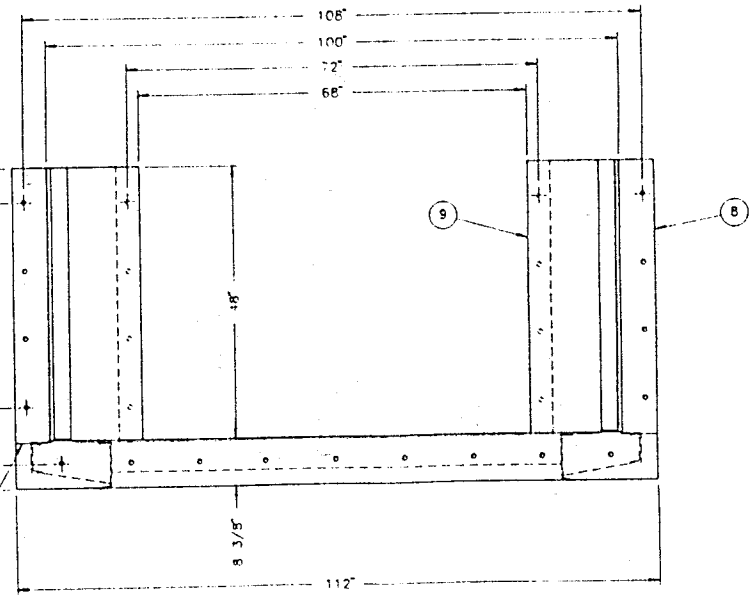

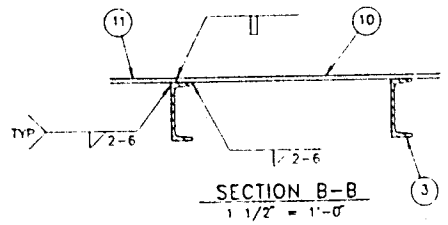

SECTION B-B
1 1/2" = 1'-0"

APPROX WT: 4000 #

THIS DRAWING IS THE PROPERTY OF CONSUMAT SYSTEMS, INC AND IS TO BE USED ONLY FOR MANUFACTURING ITEMS BY ORDER FOR CONSUMAT SYSTEMS, INC SUBJECT TO RETURN UPON DEMAND AND IS NOT TO BE PRINTED, PHOTOGRAPHED, TRACED, REPRODUCED, LOANED OR USED IN ANY WAY WITHOUT WRITTEN PERMISSION OF CONSUMAT SYSTEMS, INC.

DR BLJ	DATE 6/30/94	CONSUMAT SYSTEMS, INC. RICHMOND, VA. U.S.A.
CHK	DATE	
APP	DATE	TITLE: LOADING BRIDGE ASSEMBLY ML-561 LOADER
APP	DATE	
ARCHIVE	PROJ NO. P5185	
NEXT HIGHER ASSY	SCALE 3/4" = 1'	DWG NO. D-011-0072
DO NOT SCALE	REFERENCE	SHEET 1 OF 2
		REV. A

REV	REVISION	DATE	DR	CHK	APP	APP
A	ADD HOLES W1 THRU	3-3-94				
B						
C						
D						
E						
F						
G						
H						
I						

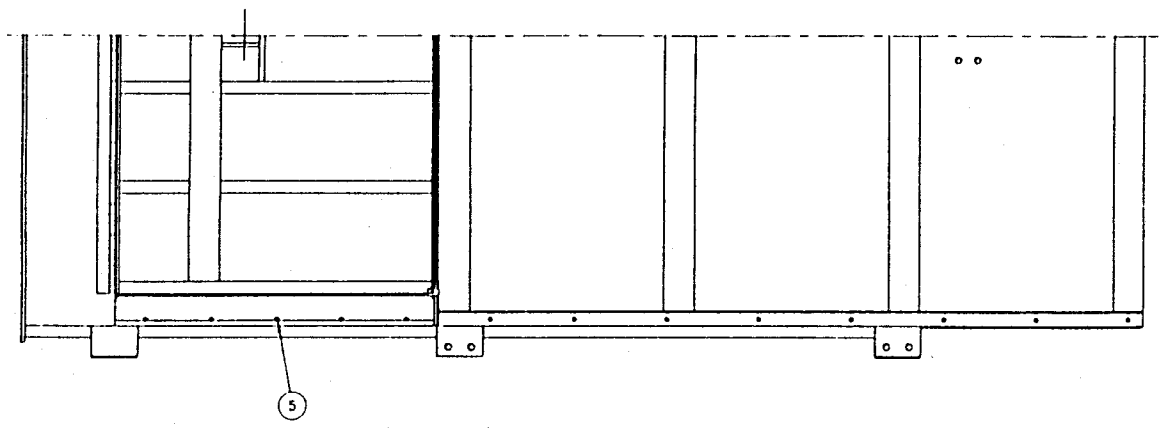

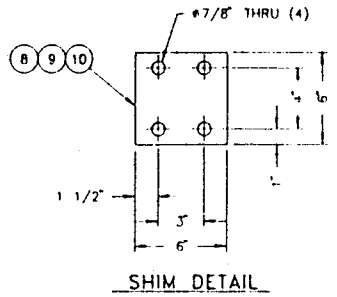

SHIM DETAIL

PARTS LIST					
QTY	ITM	PART NUMBER	DESCRIPTION	CUT FROM	
1	1	D-10A-0316	CHUTE ASSEMBLY		
1	2	D-10B-0132	RAM ASSEMBLY		
1	3	C-10A-0020	LIMIT SWITCH TRACK ASSEMBLY		
1	4	D-10A-0317	HOPPER DOOR ASSEMBLY		
REF	5	-	1/2"-13 X 1 3/4" BOLT, NUT & LOCKW. (10)		
REF	6	12001344	SHEFFER 3.25X15L46K HYD. CYLINDER (2)		
REF	7	12001212	SHEFFER 2.5X4120CCK HYD.CYLINDER		
4	8	D-010-0101 P08	16 GA 6 X 6	0.006	01000161
8	9	D-010-0101 P09	12 GA 6 X 6	0.008	01000125
4	10	D-010-0101 P10	1/4 PL 6 X 6	0.008	01000315
16	11	09001807	3/4-10 X 2 1/2 HEX HEAD BOLT		
16	12	09004317	3/4-10 HEX NUT		
16	13	09005008	3/4 LOCK WASHER		
20	14	09004315	1/2-13 HEX NUT		
20	15	09005005	1/2 LOCK WASHER		

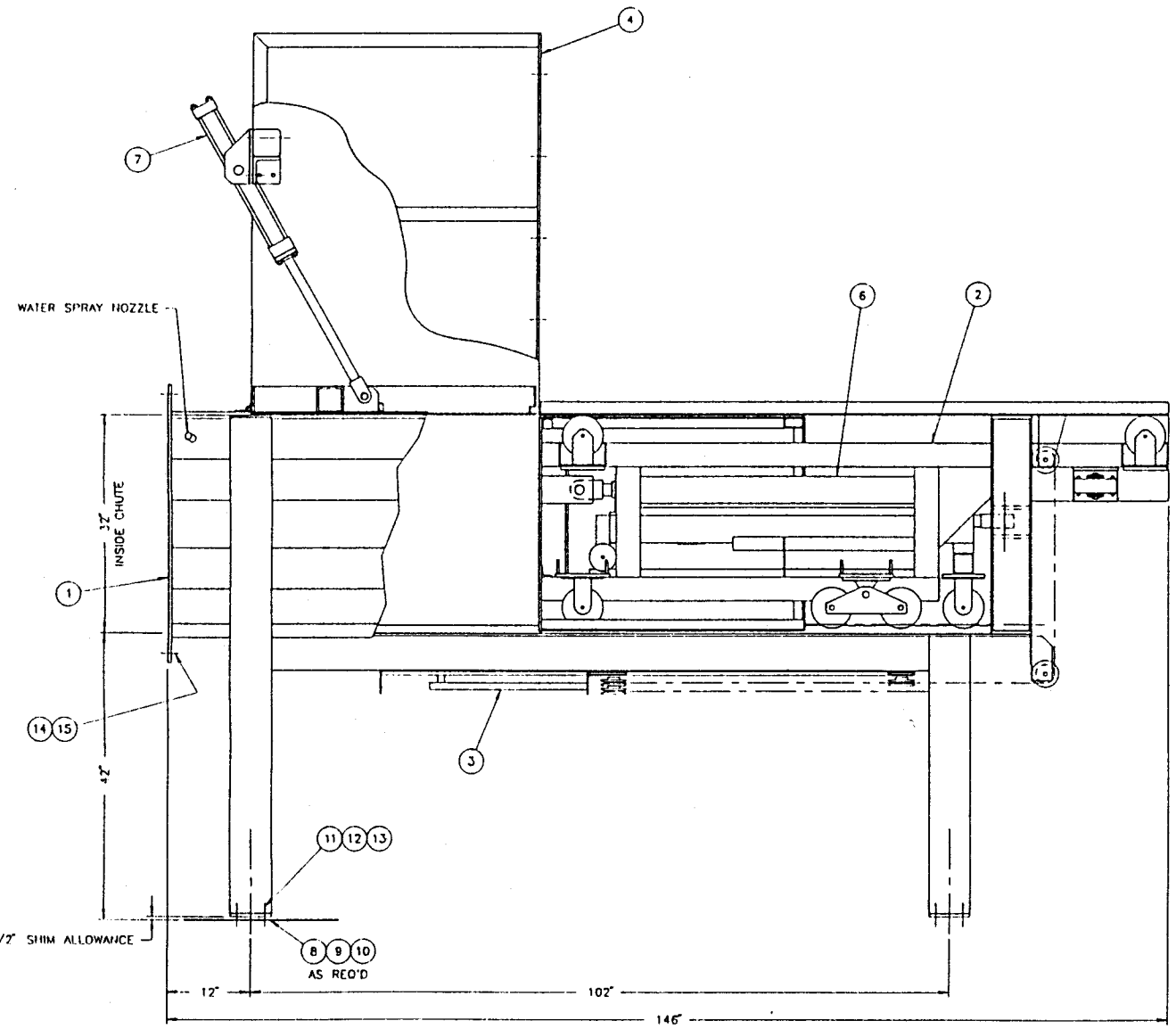

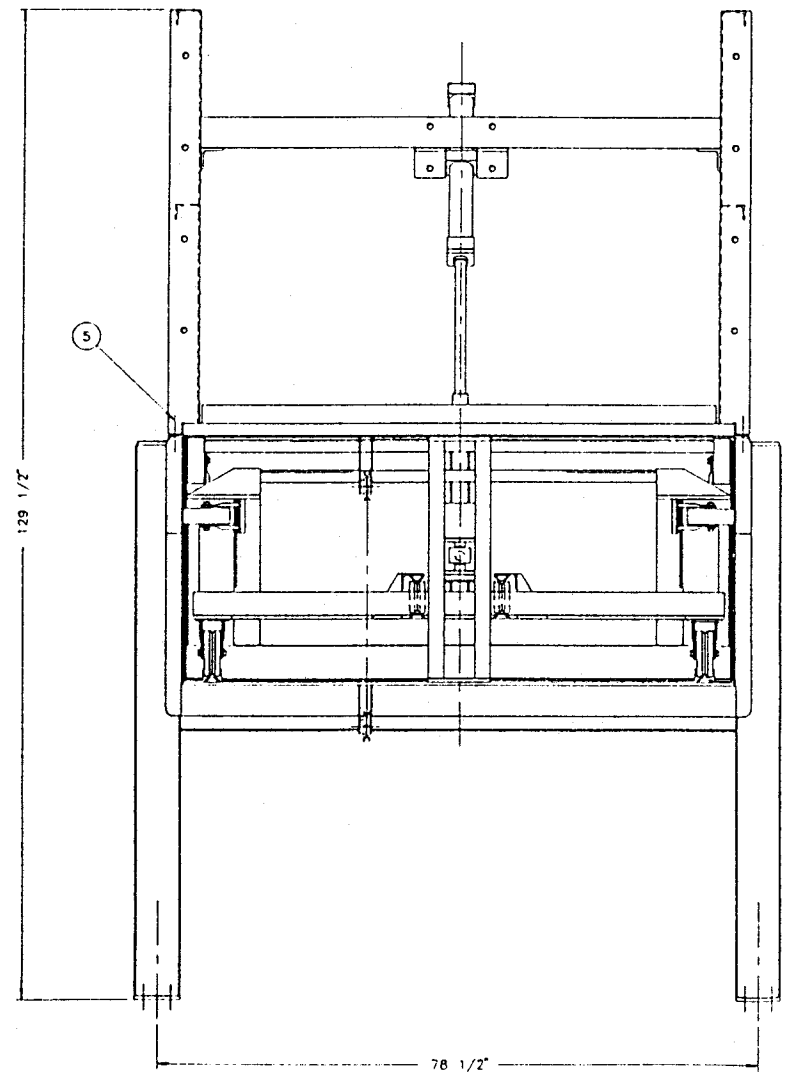

APPROX WT: 7250 LBS

REV	REVISION	DATE	DR	CHK	APP	APP
C						
B	REV LIM SW TRACK AS BUILT, WAS C-10A-0318	11-16-94	BLJ			
A	ADD P14 & 15	9-8-94	BLJ			

THIS DRAWING IS THE PROPERTY OF CONSUMAT SYSTEMS, INC. AND IS TO BE USED ONLY FOR PURPOSES DEALING ON ORDER FOR CONSUMAT SYSTEMS, INC. SUBJECT TO RETURN UPON DEMAND AND IS NOT TO BE PRINTED, PHOTOGRAPHED, COPIED, REPRODUCED, LOANED OR USED IN ANY WAY WITHOUT WRITTEN PERMISSION OF CONSUMAT SYSTEMS, INC.

DR BLJ	DATE 6/7/94	CONSUMAT SYSTEMS, INC. RICHMOND, VA. U.S.A.
CHK	DATE	
APP	DATE	TITLE: ML-561 LOADER ASSEMBLY 72"W X 32"H X 92" STROKE
APP	DATE	
ARCHIVE	PROJ NO. P5185	
NEXT HIGHER ASSY D-010-0101	SCALE 1" = 1'	DWG NO. D-010-0101
DO NOT SCALE	REFERENCE	SHEET OF
		REV. B

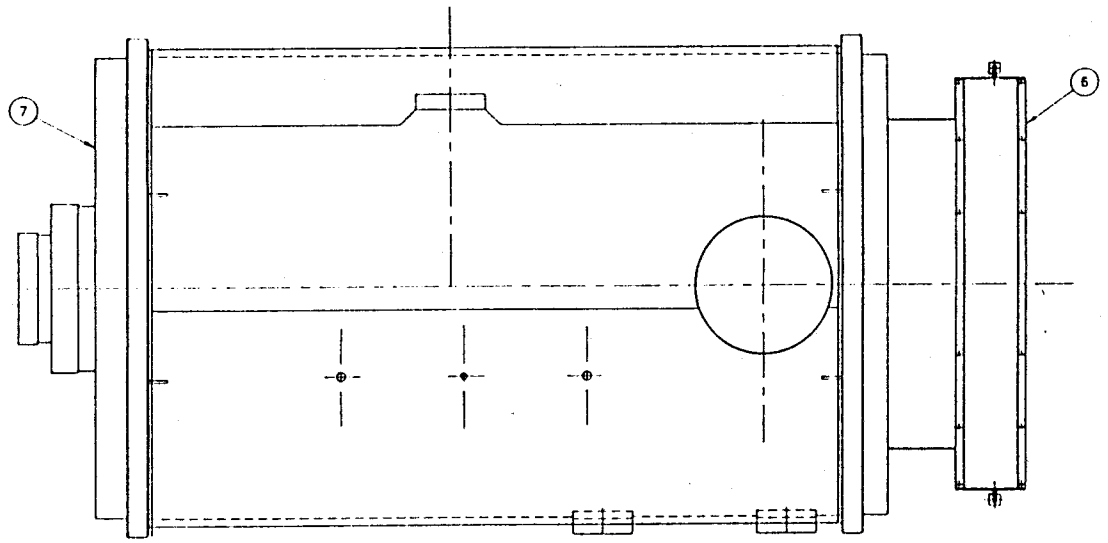

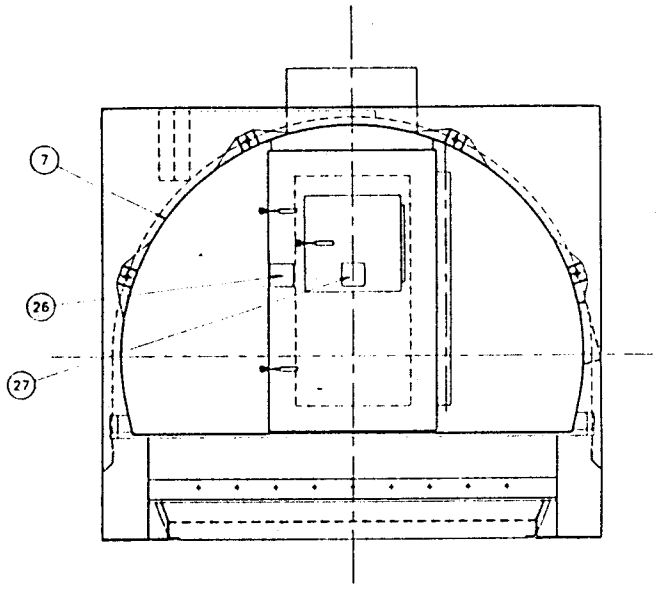

PARTS LIST					
QTY	ITM	PART NUMBER	DESCRIPTION	CUT FROM	
REF	1	D-15J-0267	BULKHEAD B1 ASSEMBLY		
REF	2	D-15J-0294	BULKHEAD B2 ASSEMBLY		
REF	3	D-15E-0099	LOWER CHAMBER SHELL WELDMENT		
1	4	D-15D-0139	LOWER CHAMBER REFRACTORY		
1	5	D-15R-0056	BREECHING AND BURNER DRAWING		
1	6	D-15L-0119	CHARGING HEAD & TAP-IN ASSEMBLY		
1	7	D-039-0151	CLEAN OUT HEAD ASSEMBLY		
1	8	D-018-0201	TRANSFER RAM ASSEMBLY		
1	9	D-15A-0036	TRANSFER RAM VIPER ASSEMBLY		
4	10	C-015-0242 G01	RAM SUPPORT WHEEL		
2	11	C-015-0307	GUIDE ROLLER ASSEMBLY		
2	12	B-018-0145 G03	TOP ROLLER ASSEMBLY		
1	13	C-15C-0007	GUIDE STRIP ASSEMBLY		
4	14	D-35K-0112	AIR PIPE ASSEMBLY		
8	15	B-15H-0038	AIR PIPE BRACKET		
1	16	B-18A-0033	CYLINDER BRACKET ASSEMBLY		
4	17	B-35K-0104 G02	AIR NOZZLE CS-760		
REF	18	12001643	TR-29 CONSUMAT CYLINDER		
REF	19	12001557	FD-18 CONSUMAT CYLINDER		
32	20	09001807	3/4-10 X 2 1/2 HEX HEAD BOLT		
8	21	09001804	3/4-10 X 3 HEX HEAD BOLT		
44	22	09004317	3/4-10 HEX NUT		
44	23	09004909	3/4 FLAT WASHER		
16	24	09004007	5/8-11 S/S HEX NUT		
16	25	09004108	5/8 S/S FLAT WASHER		
1	26	H-3	CAUTION DECAL - CLEAN-OUT DOOR		
1	27	H-18	CAUTION DECAL - INSPECTION DOOR		
1	28	D-024-0238	LOWER CHAMBER SHROUD ASSEMBLY		

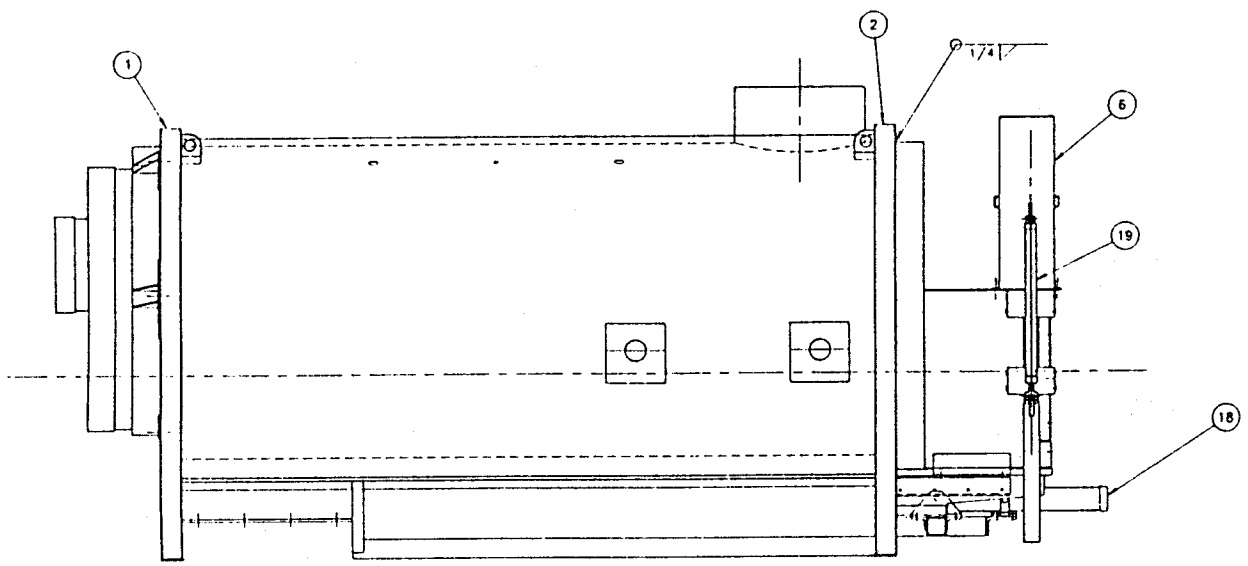

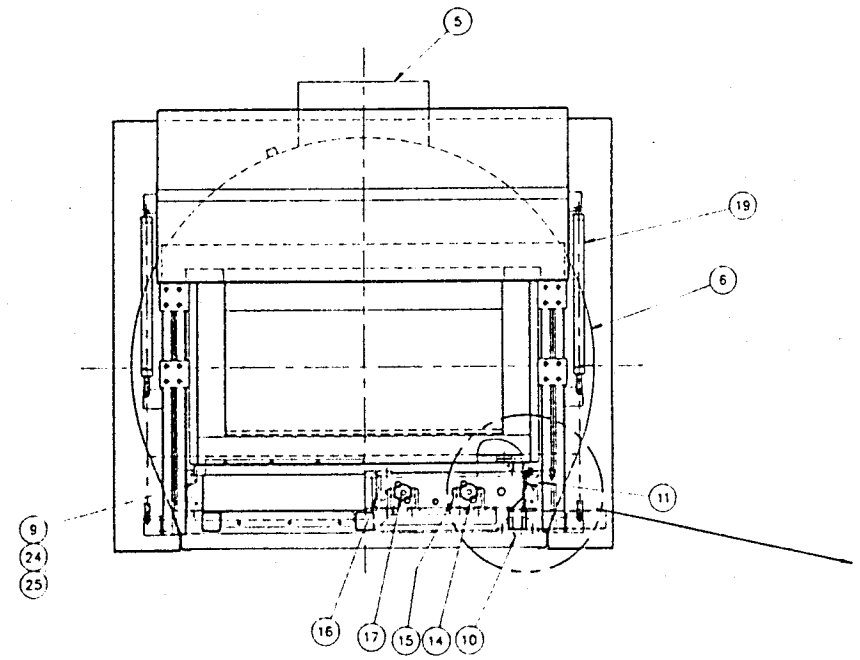

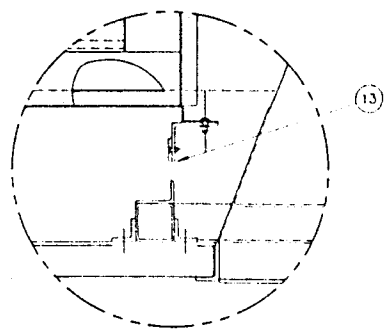

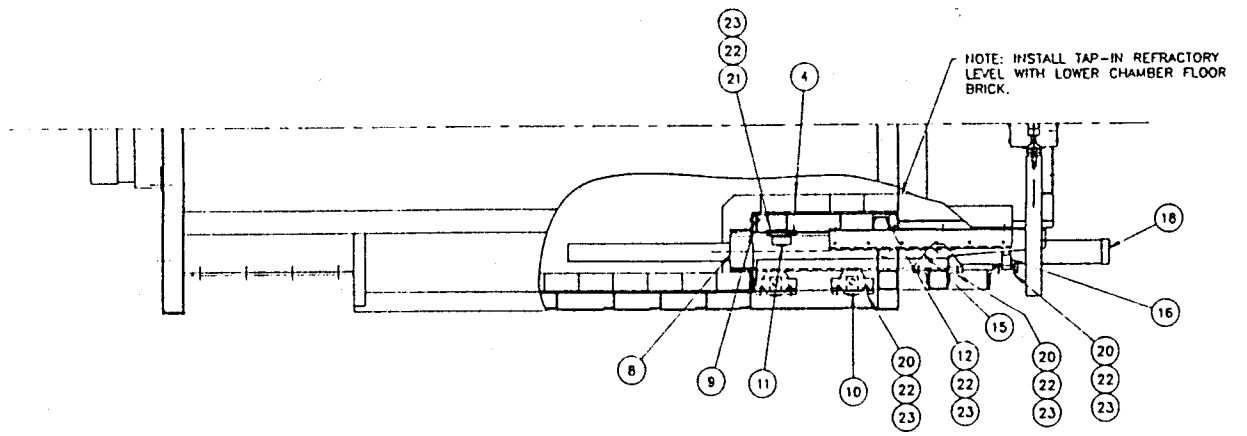

THIS DRAWING IS THE PROPERTY OF CONSUMAT SYSTEMS, INC AND IS TO BE USED ONLY FOR PURCHASING ITEMS ON ORDER FOR CONSUMAT SYSTEMS, INC. IT IS SUBJECT TO RETURN UPON DEMAND AND IS NOT TO BE PRINTED, PHOTOGRAPHED, COPIED, REPRODUCED, LOANED OR USED IN ANY WAY WITHOUT WRITTEN PERMISSION OF CONSUMAT SYSTEMS, INC.

BY	DATE
TWC	4-27-94
CHK	DATE
APP	DATE
APP	DATE
ARCHIVE	PROJ NO. P-5185

CONSUMAT SYSTEMS, INC.
RICHMOND, VA. U.S.A.

TITLE
MECHANICAL ASSEMBLY
CS-760 L/C

NEXT HIGHER ASSY

DO NOT SCALE

SCALE 1/2" = 1'

REFERENCE

DWG NO. D-15X-0001

SHEET OF

REV

REV	REVISION	DATE	DR	CHK	APP	APP
C						
B						
A						
F						
E						
D						
I						
H						
G						

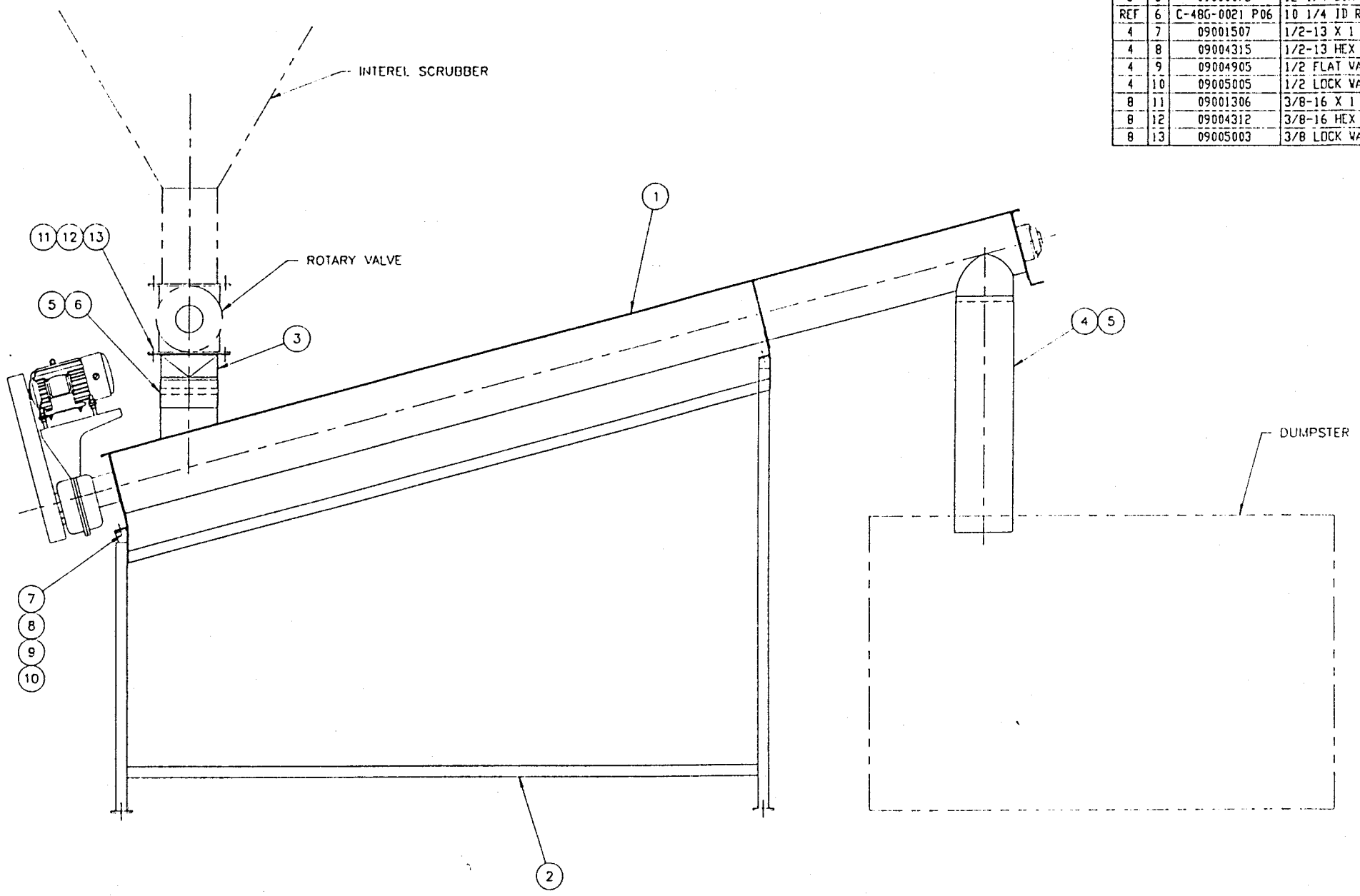

PARTS LIST					
QTY	BM	PART NUMBER	DESCRIPTION	CUT	FROM
1	1	C-48G-0019	9' SCREW CONVEYOR ASSEMBLY		
1	2	C-48G-0020	SCREW CONVEYOR MOUNT		
1	3	B-28L-0150	OUTLET ADAPTER		
1	4	C-48G-0021 P04	1/16 NYLON REINF RUBR BOOT 10 1/4 ID X 48	10.83	02001428
3	5	09000075	12 1/4 DIA HOSE CLAMP		
REF	6	C-48G-0021 P06	10 1/4 ID RUBR CPLG, CUT FROM P04 AS REQ'D		
4	7	09001507	1/2-13 X 1 1/2 HEX HEAD BOLT		
4	8	09004315	1/2-13 HEX NUT		
4	9	09004905	1/2 FLAT WASHER		
4	10	09005005	1/2 LOCK WASHER		
8	11	09001306	3/8-16 X 1 1/4 HEX HEAD BOLT		
8	12	09004312	3/8-16 HEX NUT		
8	13	09005003	3/8 LOCK WASHER		

APPROX WT: 850 LBS

THIS DRAWING IS THE PROPERTY OF CONSUMAT SYSTEMS, INC. AND IS TO BE USED ONLY FOR PRODUCING ITEMS ON ORDER FOR CONSUMAT SYSTEMS, INC. SUBJECT TO RETURN UPON DEMAND AND IS NOT TO BE PRINTED, PHOTOGRAPHED, COPIED, REPRODUCED, LOANED OR USED IN ANY WAY WITHOUT WRITTEN PERMISSION OF CONSUMAT SYSTEMS, INC.

REV	REVISION	DATE	DR	CHK	APP	APP
C						
B						
A						

REV	REVISION	DATE	DR	CHK	APP	APP
F						
E						
D						

DR BLJ	DATE 8-16-94	CONSUMAT SYSTEMS, INC. RICHMOND, VA. U.S.A.	
CHK	DATE		
APP	DATE	TITLE 9" SCREW CONVEYOR FIELD ASSEMBLY INTEREL IDAP-II DRY SCRUBBER	
APP	DATE		
ARCHIVE	PROJ NO. P5185		
NEXT HIGHER ASSY		SCALE 3/4" = 1'	DWG. NO. C-48G-0021
DO NOT SCALE		REFERENCE	SHEET OF
			REV.

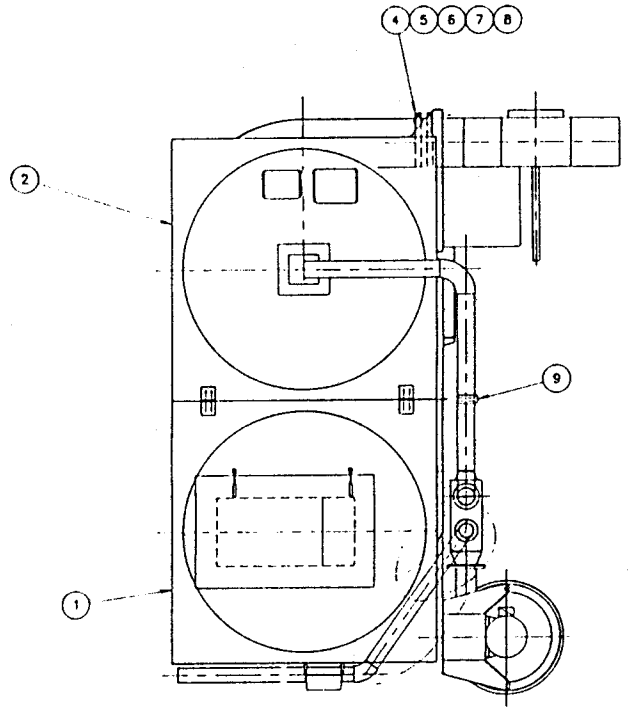

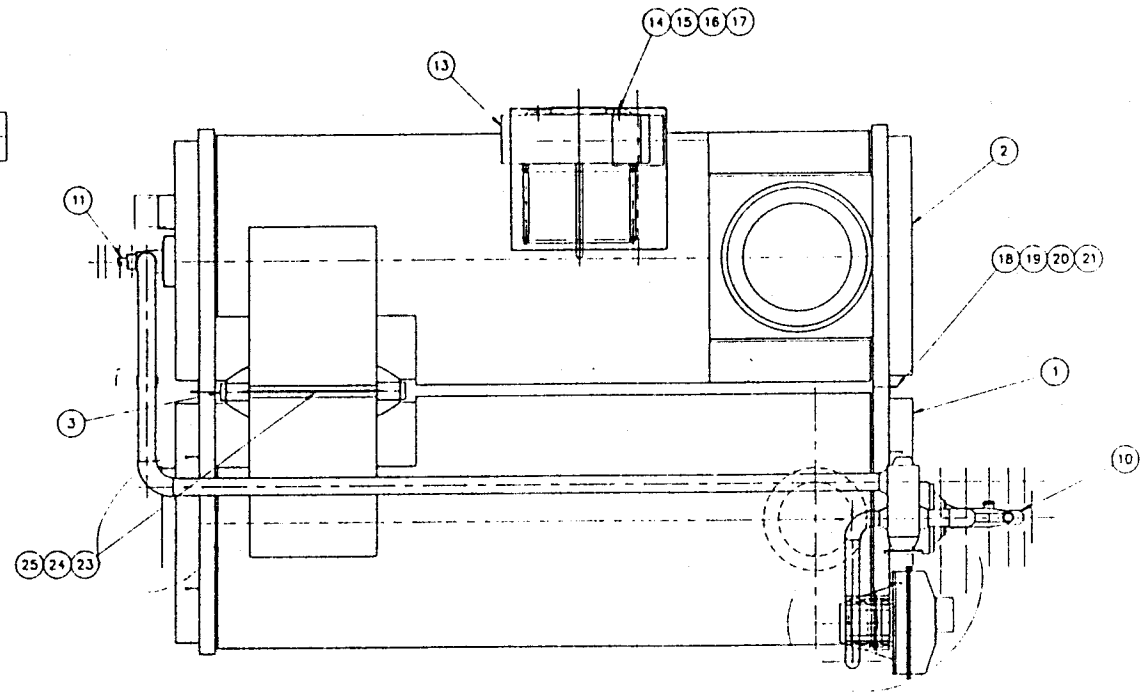

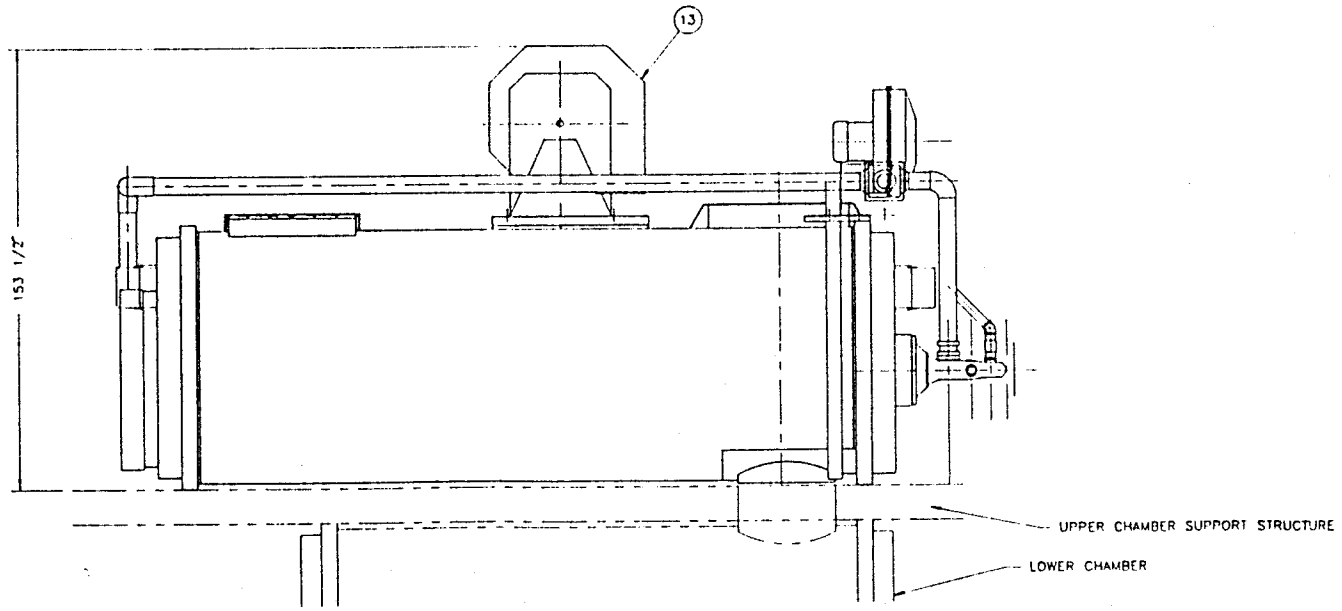

PARTS LIST

QTY	ITM	PART NUMBER	DESCRIPTION	CUT FROM	
1	1	D-31X-0001	UPPER CHAMBER SHELL #1 ASSEMBLY		
1	2	D-31X-0002	UPPER CHAMBER SHELL #2 ASSEMBLY		
1	3	C-025-0359 G04	DRAYBAND 62" I.D.		
6	4	02001428	1/16 NYLON REINFORCED SHEET 6 X 140		
4	5	B-031-0398 P7	RETAINER AH-19 FAN		
8	6	09001805	1/4-20 X 1 HEX HEAD BOLT		
8	7	09004310	1/4-20 HEX NUT		
8	8	09005001	1/4 LOCK WASHER		
1	9	29001555	6 IN DRAV BAND X 6 IN		
REF	10	05001021	NA #6514-B-B BURNER W/ TILE		
REF	11	05001008	NA #6422-BA BURNER W/ TILE (DUAL FUEL)		
REF	12	04000621	NA 2316-21/1-120D BLOWER 20 HP TEFC		
REF	13	04000521	AMER 19WH BLOWER 20 HP		
9	14	09001702	5/8-11 X 1 1/2 HEX HEAD BOLT		
9	15	09004316	5/8-11 HEX NUT		
9	16	09004907	5/8 FLAT WASHER		
9	17	09005007	5/8 LOCK WASHER		
8	18	09001802	3/4-10 X 1 1/2 HEX HEAD BOLT		
8	19	09004317	3/4-10 HEX NUT		
8	20	09004909	3/4 FLAT WASHER		
8	21	09005008	3/4 LOCK WASHER		
1	22	D-31F-0065	BREECHING & BURNER LAYOUT DRAVING		
16	23	09001307	3/8-16 X 1 1/2 HEX HEAD BOLT		
16	24	09004312	3/8-16 HEX NUT		
16	25	09005003	3/8 LOCK WASHER		

THIS DRAWING IS THE PROPERTY OF CONSUMAT SYSTEMS, INC. AND IS TO BE USED ONLY FOR PRODUCING ITEMS ON ORDER FOR CONSUMAT SYSTEMS, INC. SUBJECT TO RETURN UPON DEMAND AND IS NOT TO BE REPRINTED, PHOTOGRAPHED, COPIED, REPRODUCED, LOANED OR USED IN ANY WAY WITHOUT WRITTEN PERMISSION OF CONSUMAT SYSTEMS, INC.

DR	TWC	DATE 5-13-94
CHK		DATE
APP		DATE
APP		DATE
ARCHIVE		PROJ NO. P-5185

CONSUMAT SYSTEMS, INC.
RICHMOND, VA. U.S.A.

TITLE
UPPER CHAMBER
FIELD ASSEMBLY
CS-760-2

NEXT HIGHER ASSY

DO NOT SCALE

SCALE 3/8" = 1'

REFERENCE

DWG NO. D-031-0466

REV.

SHEET OF

REV	REVISION	DATE	DR	CHK	APP	APP
A						
B						
C						
D						
E						
F						
G						
H						
I						

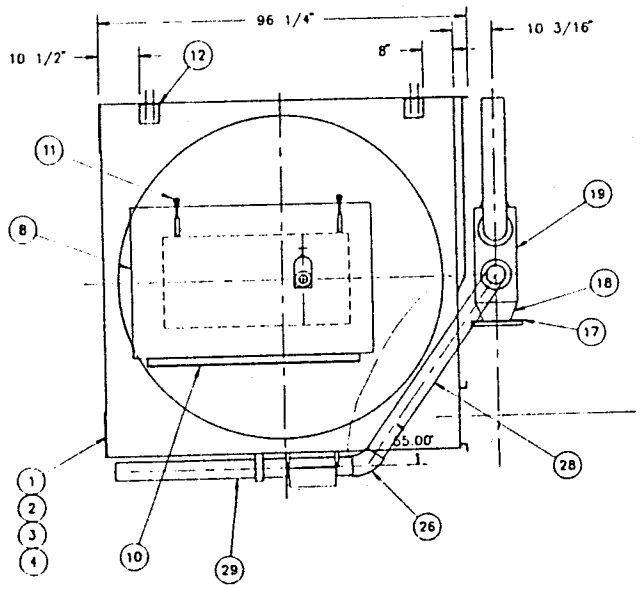

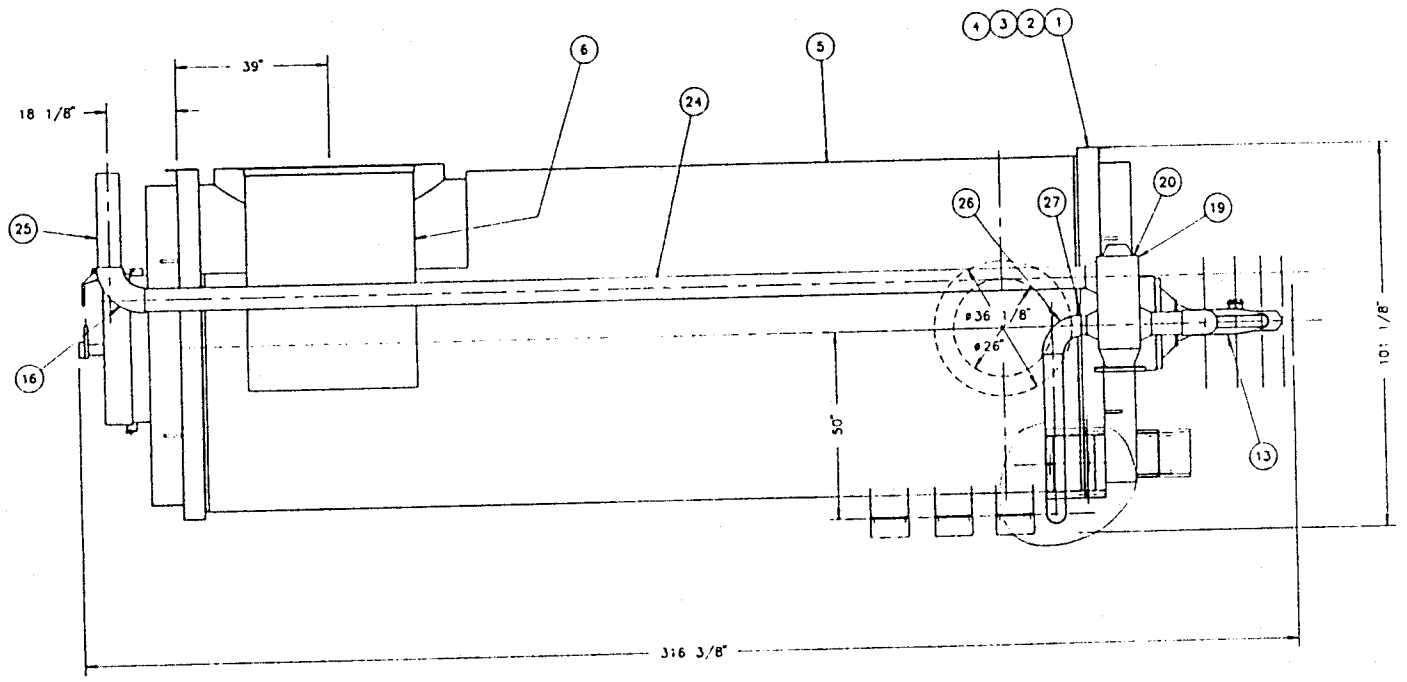

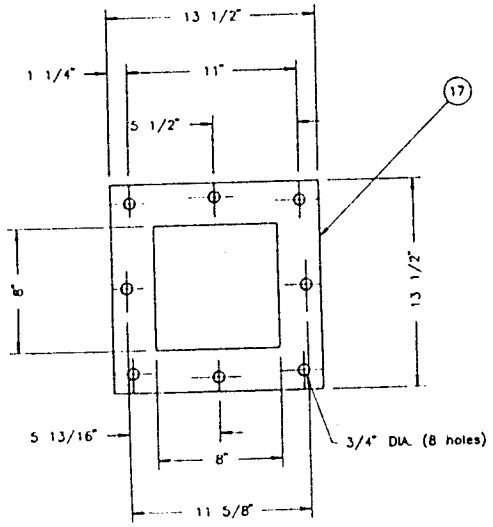

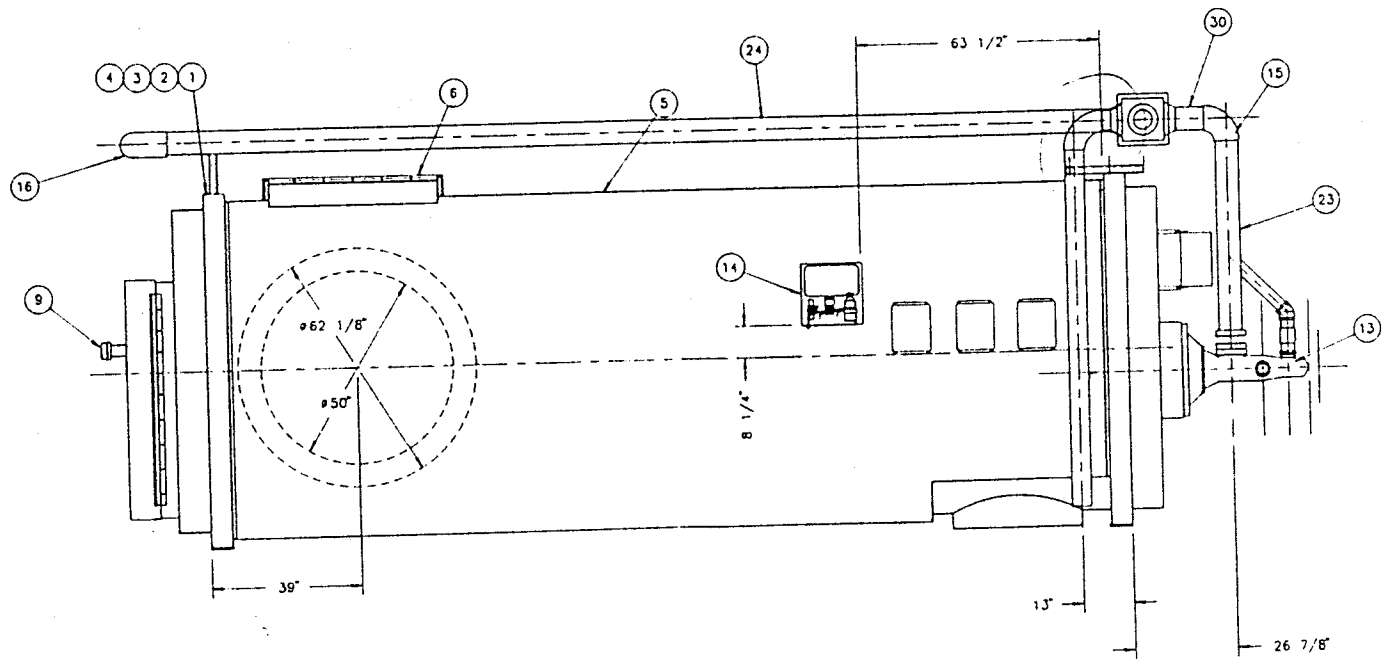

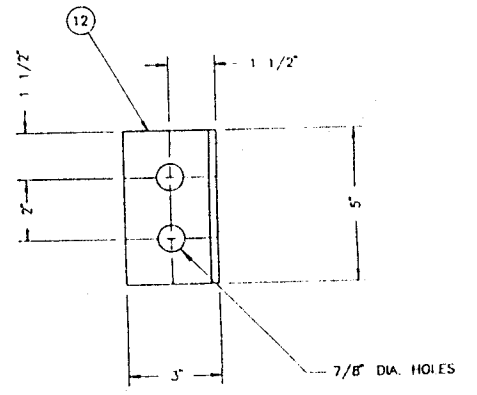

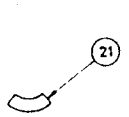

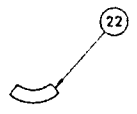

INPUT	
SMALL DIAMETER:	5.0000
LARGE DIAMETER:	8.0000
HEIGHT:	3.0000
THICKNESS:	0.0600
NO. OF SEGMENTS:	2

FLAT LAYOUT	
SMALL RADIUS =	5.5231
LARGE RADIUS =	8.8772
ANGLE =	80.4984
SMALL CHORD =	7.1371
LARGE CHORD =	11.4713
OVERALL HEIGHT =	4.6617

INPUT	
SMALL DIAMETER:	6.0000
LARGE DIAMETER:	9.0000
HEIGHT:	3.0000
THICKNESS:	0.0600
NO. OF SEGMENTS:	2

FLAT LAYOUT	
SMALL RADIUS =	6.6411
LARGE RADIUS =	9.9952
ANGLE =	80.4984
SMALL CHORD =	8.5818
LARGE CHORD =	12.9161
OVERALL HEIGHT =	4.9264

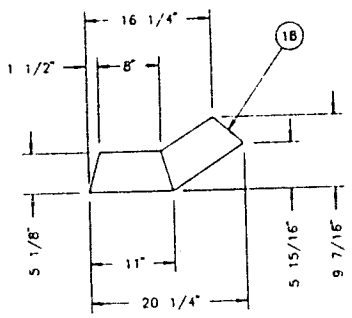

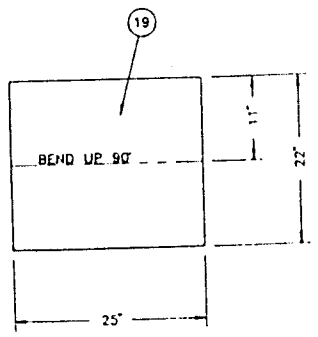

PARTS LIST

QTY	GW	PART NUMBER	DESCRIPTION	CUT FROM	
REF	1	C-31A-0063	UPPER CHAMBER BULKHEAD		
REF	2	D-31J-0002	UPPER CHAMBER SHELL #1 WELDMENT		
REF	3	D-31B-0111	UPPER CHAMBER REFRACTORY		
REF	4	D-31F-0065	BURNER & BREECHING LAYOUT		
1	5	D-31L-0001	UPPER CHAMBER SHROUD SHELL #1 ASSEMBLY		
1	6	C-31G-0190	CROSSOVER DUCT		
1	7	C-379-0036	FAN BASE ASSEMBLY N.A. 2316-21/1		
1	8	C-16B-0030	24 X 48 DOOR ASSEMBLY		
1	9	08008780	OBSERVATION PORT ASSY		
1	10	C-16D-0014	24 X 48 DOOR HINGE ASSEMBLY		
2	11	29001935	DOOR LATCH ASSY		
4	12	D-31X-0001 P12	L3 X 3 X 1/4 X 5	0.021	01003062
REF	13	05001021	NA #6514-6-B BURNER W/ TILE		
1	14	B-34C-0093 G02	BYPASS VALVE REMOTE STA CONTROL ASSEMBLY		
1	15	17003300	6 IN STD SR WELD ELBOW		
1	16	17003011	6IN STD LR 90DG WELD ELBO	0.040	01000406
1	17	D-31X-0001 P17	3/8 PL 13 1/2 X 13 1/2	0.041	01000125
2	18	D-31X-0001 P18	12 GA 9 7/16 X 20 1/4	0.119	01000125
2	19	D-31X-0001 P19	12 GA 22 X 25	0.026	01000125
1	20	D-31X-0001 P20	12 GA 11 X 11	0.009	01000164
2	21	D-31X-0001 P21	16 GA CRS 4 21/32 X 11 15/32	0.011	01000164
4	22	D-31X-0001 P22	16 GA CRS 4 15/16 X 12 29/32	4.17	01005186
1	23	D-31X-0001 P23	6" OD X 16 GA WALL TUBE X 50	21.17	01005186
1	24	D-31X-0001 P24	6" OD X 16 GA WALL TUBE X 245 1/2	2.02	01005186
1	25	D-31X-0001 P25	6" OD X 16 GA WALL TUBE X 24 1/4		
2	26	17003010	5IN STD LR 90DG WELD ELBO	0.83	01005180
1	27	D-31X-0001 P27	5" OD X 16 GA WALL TUBE X 2	4.21	01005180
1	28	D-31X-0001 P28	5" OD X 16 GA WALL TUBE X 50 1/2	5.17	01005180
1	29	D-31X-0001 P29	5" OD X 16 GA WALL TUBE X 62	0.67	01005186
1	30	D-31X-0001 P30	6" OD X 16 GA WALL TUBE X 8		

* CUT (1) 90° ELBOW TO 55°.

WEIGHT 48,000#

REV	REVISION	DATE	DR	CHK	APP	APP
C						
B	REVISED AIR PIPING	10-24-94	TWC			
A	ADDED ITEM 14	10-20-94	DEK			

THIS DRAWING IS THE PROPERTY OF CONSUMAT SYSTEMS, INC AND IS TO BE USED ONLY FOR PRODUCING ITEMS ON ORDER FOR CONSUMAT SYSTEMS, INC. SUBJECT TO RETURN UPON DEMAND AND IS NOT TO BE PRINTED, PHOTOGRAPHED, COPIED, REPRODUCED, LOANED OR USED IN ANY WAY WITHOUT WRITTEN PERMISSION OF CONSUMAT SYSTEMS, INC.

DR TWC	DATE 5-23-94	CONSUMAT SYSTEMS, INC. RICHMOND, VA. U.S.A.
CHK	DATE	
APP	DATE	TITLE
APP	DATE	SHELL #1 ASSEMBLY CS-760 84 X 240
ARCHIVE	PROJ NO. P-5185	
NEXT HIGHER ASSY		SCALE 1/2" = 1"
DO NOT SCALE		REFERENCE
		DWG NO. D-31X-0001 SHEET 1 OF 1
		REV. B

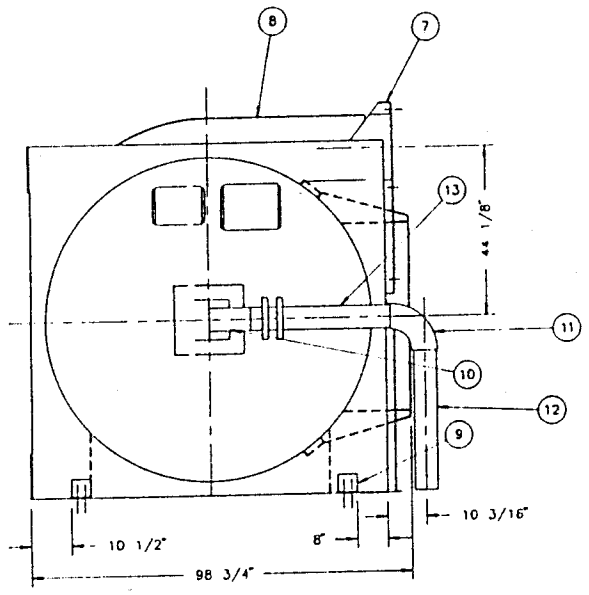

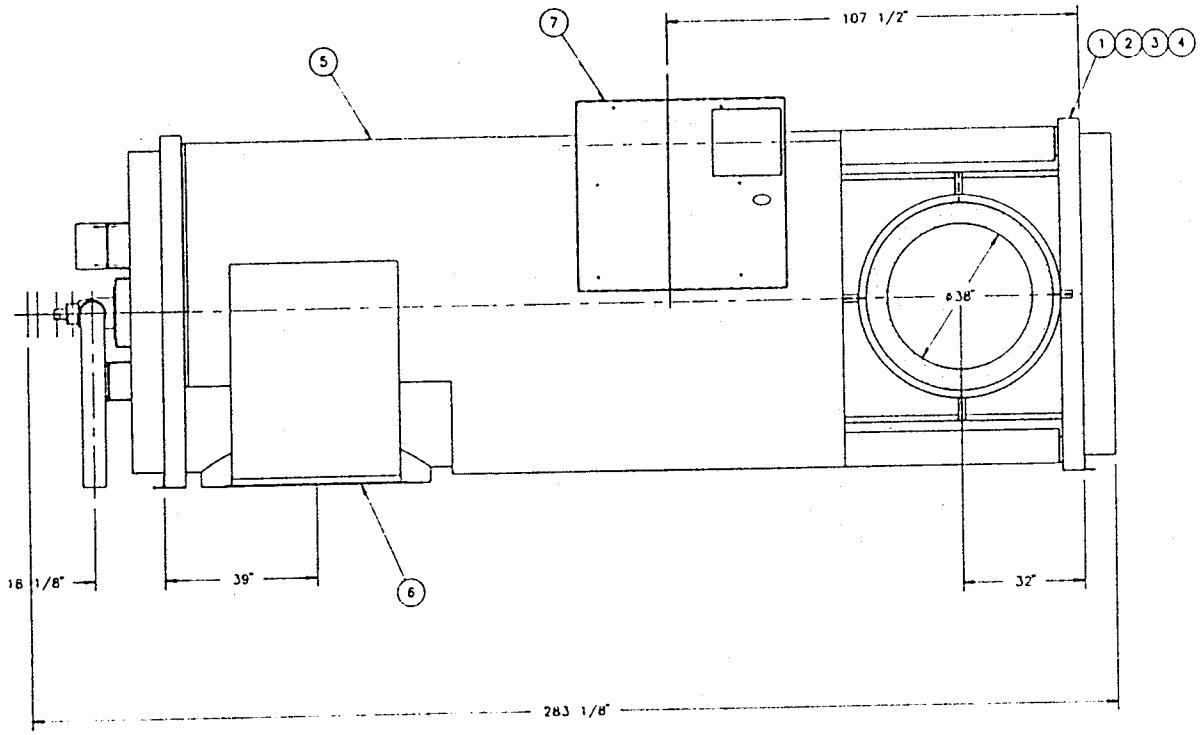

PARTS LIST					
QTY	BM	PART NUMBER	DESCRIPTION	CUT	FROM
REF	1	C-31A-0063	UPPER CHAMBER BULKHEAD		
REF	2	D-31J-0003	UPPER CHAMBER SHELL #2 WELDMENT		
REF	3	D-31B-0111	UPPER CHAMBER REFRACTORY		
REF	4	D-31F-0065	BREECHING & BURNER LAYOUT DRAWING		
1	5	D-31L-0002	SHROUD SHELL #2		
1	6	C-31G-0190	CROSSOVER DUCT		
1	7	C-37B-0035	FAN BASE ASSEMBLY AH-19 FAN		
1	8	C-31G-0183	FAN OUTLET ASSEMBLY AH-19 FAN		
4	9	D-31X-0002 P09	L3 X 3 X 1/4 X 5	0.021	01003062
REF	10	05001008	NA 86422-8A BURNER W/ TILE (DUAL FUEL)		
1	11	17003011	6IN STD LR 90DG WELD ELBO		
1	12	D-31X-0002 P12	6" OD X 16 GA WALL TUBE X 36 1/2	3.04	01005186
1	13	D-31X-0002 P13	6" OD X 16 GA WALL TUBE X 29	2.42	01005186

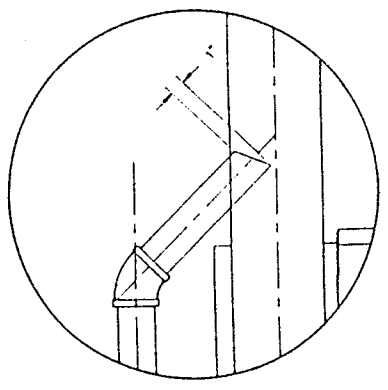

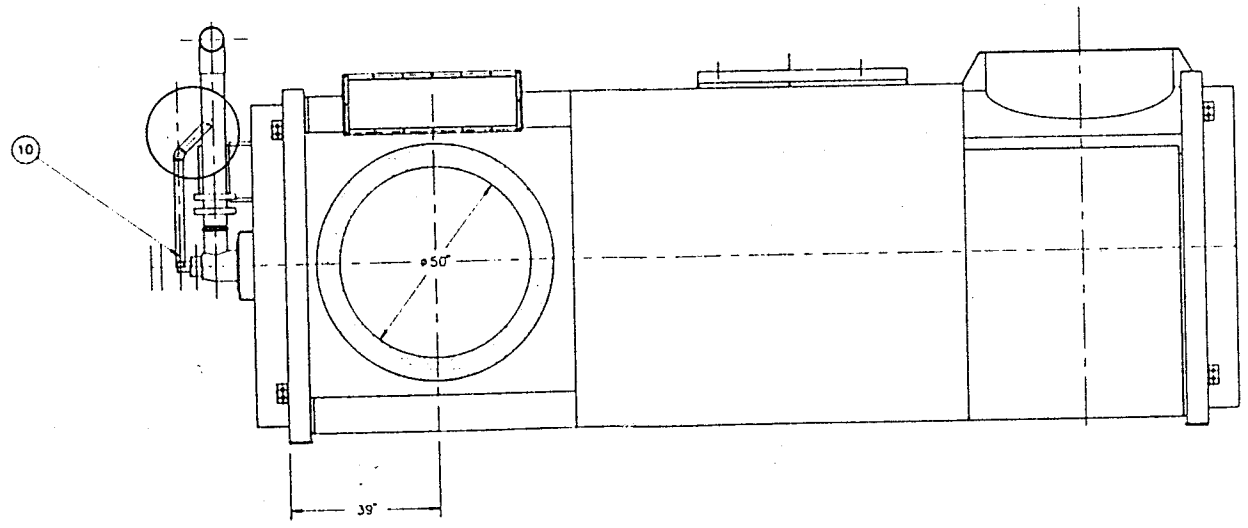

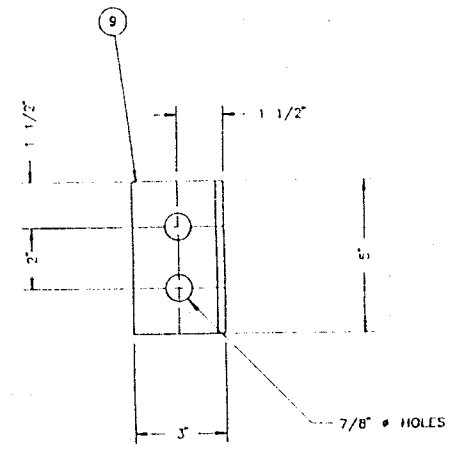

WEIGHT 48,000#

REV	REVISION	DATE	DR	CHK	APP	APP
A	REVISED AIR PIPING	10-26-94	TWC			

THIS DRAWING IS THE PROPERTY OF CONSUMAT SYSTEMS, INC. AND IS TO BE USED ONLY FOR PRODUCING ITEMS ON ORDER FOR CONSUMAT SYSTEMS, INC. SUBJECT TO RETURN UPON DEMAND AND IS NOT TO BE PRINTED, PHOTOGRAPHED, COPIED, REPRODUCED, LOANED OR USED IN ANY WAY WITHOUT WRITTEN PERMISSION OF CONSUMAT SYSTEMS, INC.

DR	DATE
TWC	5-23-94
CHK	DATE
APP	DATE
APP	DATE
ARCHIVE	PROJ NO.

CONSUMAT SYSTEMS, INC.
RICHMOND, VA. U.S.A.

TITLE
SHELL #2 ASSEMBLY
CS-760
84 X 240

NEXT HIGHER ASSY

DO NOT SCALE

SCALE 1/2" = 1'

REFERENCE

DWG NO. D-31X-0002

SHEET 1 OF 1

REV A

PARTS LIST					
QTY	BM	PART NUMBER	DESCRIPTION	CUT	FROM
1	1	D-020-0255	ASH EJECTOR HOUSING		
1	2	C-15K-0001	RAM CARRIAGE ASSEMBLY		
1	3	C-018-0234	RAM ASSEMBLY		
1	4	C-15A-0027	RAM VIPER ASSEMBLY		
REF	5	12001663	SHEFFER SHH49AKY HYD CYLINDER CS18 AR12		
REF	6	D-20C-0029	ASH SUMP AIR SYSTEM		
REF	7	D-15E-0099	CS-760 LOWER CHAMBER SHELL		
8	8	09001804	3/4-10 X 3 HEX HEAD BOLT		
9	9	09001807	3/4-10 X 2 1/2 HEX HEAD BOLT		
16	10	09001805	3/4-10 X 2 HEX HEAD BOLT		
24	11	09004317	3/4-10 HEX NUT		
33	12	09005008	3/4 LOCK WASHER		
31	13	09004316	5/8-11 HEX NUT		
31	14	09005007	5/8 LOCK WASHER		
8	15	09001509	1/2-13 X 2 HEX HEAD BOLT		
8	16	09004315	1/2-13 HEX NUT		
8	17	09005005	1/2 LOCK WASHER		
22	18	09001705	5/8-11 X 2 HEX HEAD BOLT		
3	19	02002024	RTV SILICONE #736 SEALANT		

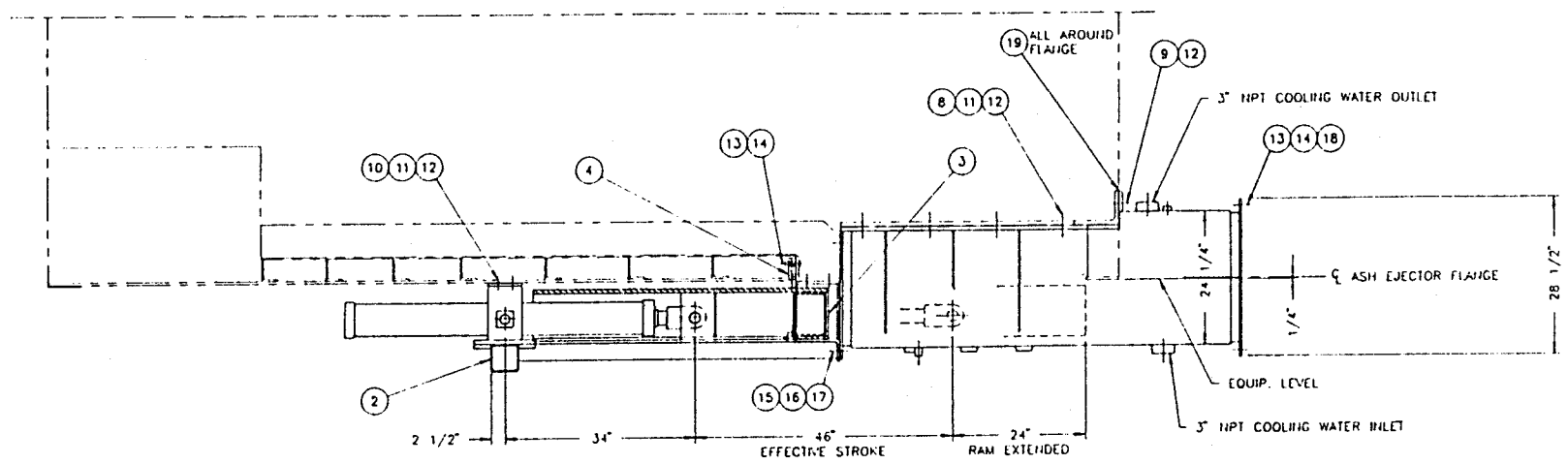

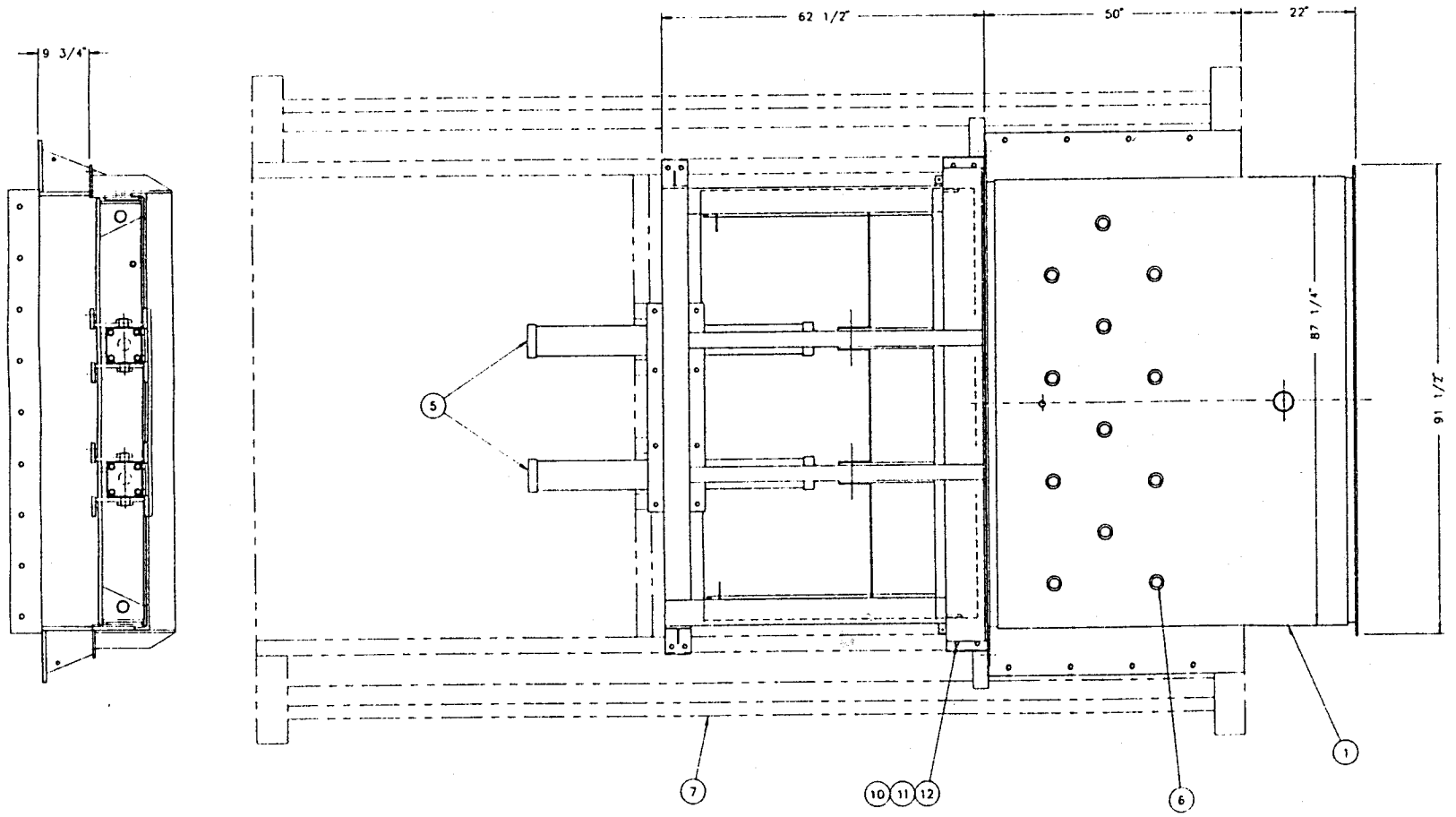

APPROX WT: 7500 LBS

THIS DRAWING IS THE PROPERTY OF CONSUMAT SYSTEMS, INC. AND IS TO BE USED ONLY FOR PRODUCING ITEMS ON ORDER FOR CONSUMAT SYSTEMS, INC. SUBJECT TO RETURN UPON DEMAND AND IS NOT TO BE PRINTED, PHOTOGRAPHED, COPIED, REPRODUCED, LOANED OR USED IN ANY WAY WITHOUT WRITTEN PERMISSION OF CONSUMAT SYSTEMS, INC.

DR	BLJ	DATE 6/22/94
CHK		DATE
APP		DATE
APP		DATE
ARCHIVE		PROJ NO. P5185
NEXT HIGHER ASSY		
DO NOT SCALE		

CONSUMAT SYSTEMS, INC.
RICHMOND, VA. U.S.A.

TITLE
ASH EJECTOR ASSEMBLY
AR4284
CS-760

SCALE	DWG NO.	REV.
3/4" = 1'	D-020-0254	A
REFERENCE	SHEET OF	

REV	REVISION	DATE	DR	CHK	APP	APP
A	ADD PIB & 19, PI3 & 14 QTY WAS 9	9 8 94	BLJ			
B						
C						
D						
E						
F						
G						
H						
I						

PARTS LIST					
QTY	BM	PART NUMBER	DESCRIPTION	CUT FROM	
REF	1	D-44A-0048	SUMP TANK PLATFORM ASS'Y		
REF	2	D-44A-0048 P25	LADDER FOOT ANGLE		
1	3	D-22B-0211	AC-48 SUMP TANK ASS'Y		
1	4	D-22K-0036	21 X 84 SHROUD ASS'Y		
1	5	C-22D-0097	AC-48 X 120 TROUGH ASS'Y		
1	6	D-22A-0173	AC-48 HEAD ASS'Y		
1	7	C-22E-0117	SUPPORT LEG ASS'Y		
15	8	B-22H-0015 G01	AC-48 FLIGHT ASS'Y		
142	9	16003000	REXNORD #468 RIVETLESS CHAIN (FT)		
30	10	16003005	#468 EXTENDED PIN, 3/4" DIA X 2 5/8" EXT		
1	11	C-22K-0044	DOOR LIFT ASS'Y		
1	12	H-16	CAUTION DECAL		
8	13	09001807	3/4-10 X 2 1/2 HEX HEAD BOLT		
8	14	09004317	3/4-10 HEX NUT		
8	15	09004514	3/4-10 LOCK NUT		
48	16	09001705	5/8-11 X 2 HEX HEAD BOLT		
48	17	09004316	5/8-11 HEX NUT		
48	18	09005007	5/8 LOCK WASHER		
2	19	02002022	RTV SILICONE #732 SEALANT		
10	20	D-022-0119 P20	L1 1/2 X 1 1/2 X 1/4 X 1 1/2	0.006	01003019

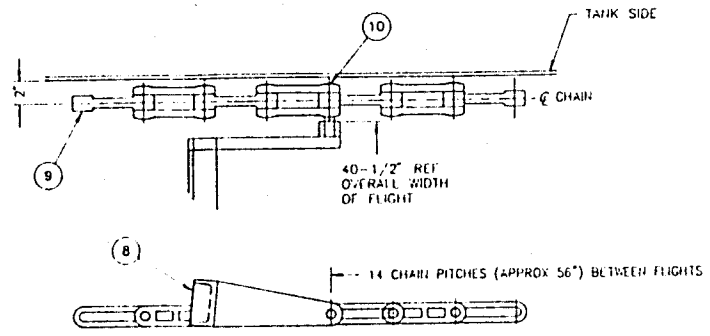

PARTIAL VIEW SHOWING FLIGHTS AND CHAIN ASSEMBLED IN SUMP TANK

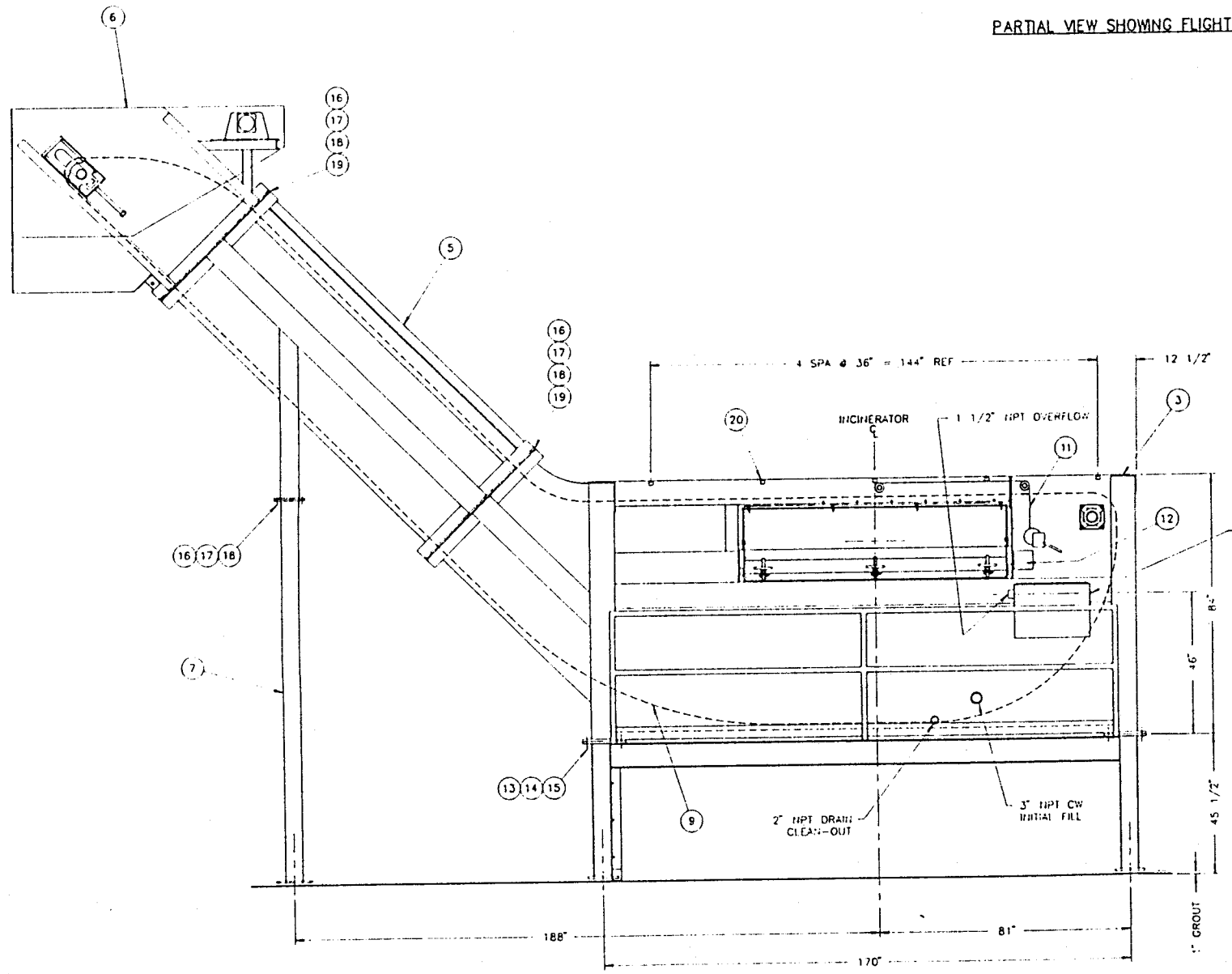

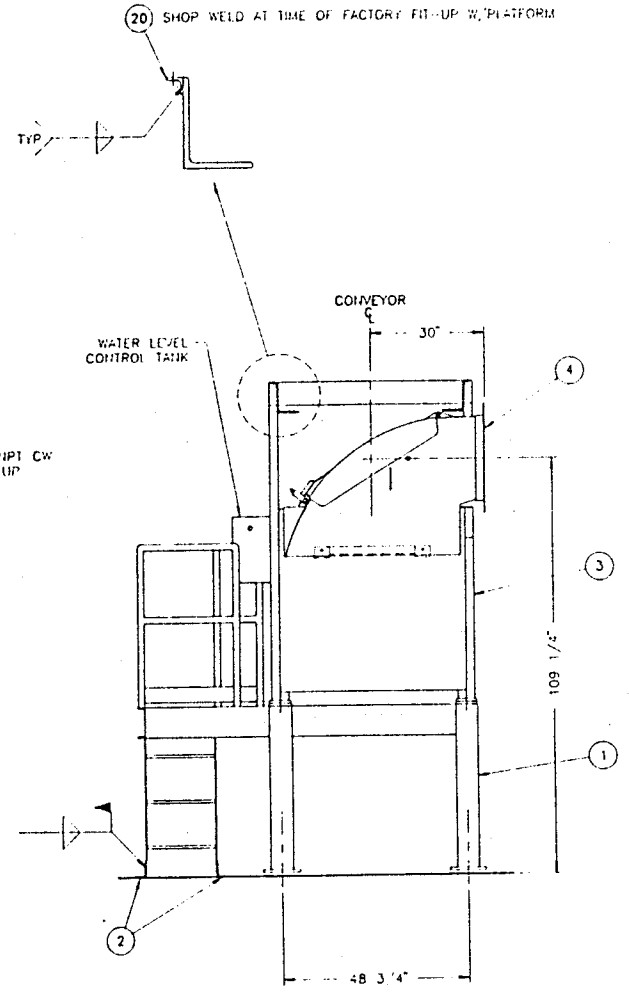

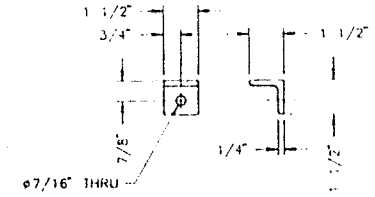

DETAIL ITEM 20

COMPONENT WEIGHTS

ITEM 1 PLATFORM: 1600 LBS
ITEM 3 SUMP TANK: 6700 LBS
ITEM 5 TROUGH: 2200 LBS
ITEM 6 HEAD: 2200 LBS
ITEM 7 LEG ASS'Y: 400 LBS

THIS DRAWING IS THE PROPERTY OF CONSUMAT SYSTEMS, INC. AND IS TO BE USED ONLY FOR PRODUCING ITEMS OR ORDER FOR CONSUMAT SYSTEMS, INC. SUBJECT TO RETURN UPON DEMAND AND IS NOT TO BE PRINTED, PHOTOGRAPHED, COPIED, REPRODUCED, LOANED OR USED IN ANY WAY WITHOUT WRITTEN PERMISSION OF CONSUMAT SYSTEMS, INC.

DR	BLJ	DATE 5/16/94
CHK		DATE
APP		DATE
APP		DATE
ARCHIVE		PROJ NO. P5185

CONSUMAT SYSTEMS, INC.
RICHMOND, VA. U.S.A.

TITLE
AC-48 CONVEYOR ASSEMBLY

NEXT HIGHER ASSY	D-01-0691	
DO NOT SCALE		
SCALE	1/2" = 1"	
REFERENCE		
DWG. NO.	D-022-0119	REV. A
SHEET	OF	

REV	REVISION	DATE	DR	CHK	APP	APP
A	DOOR LIFT WAS C-22K-0006	12-6-94	BLJ			

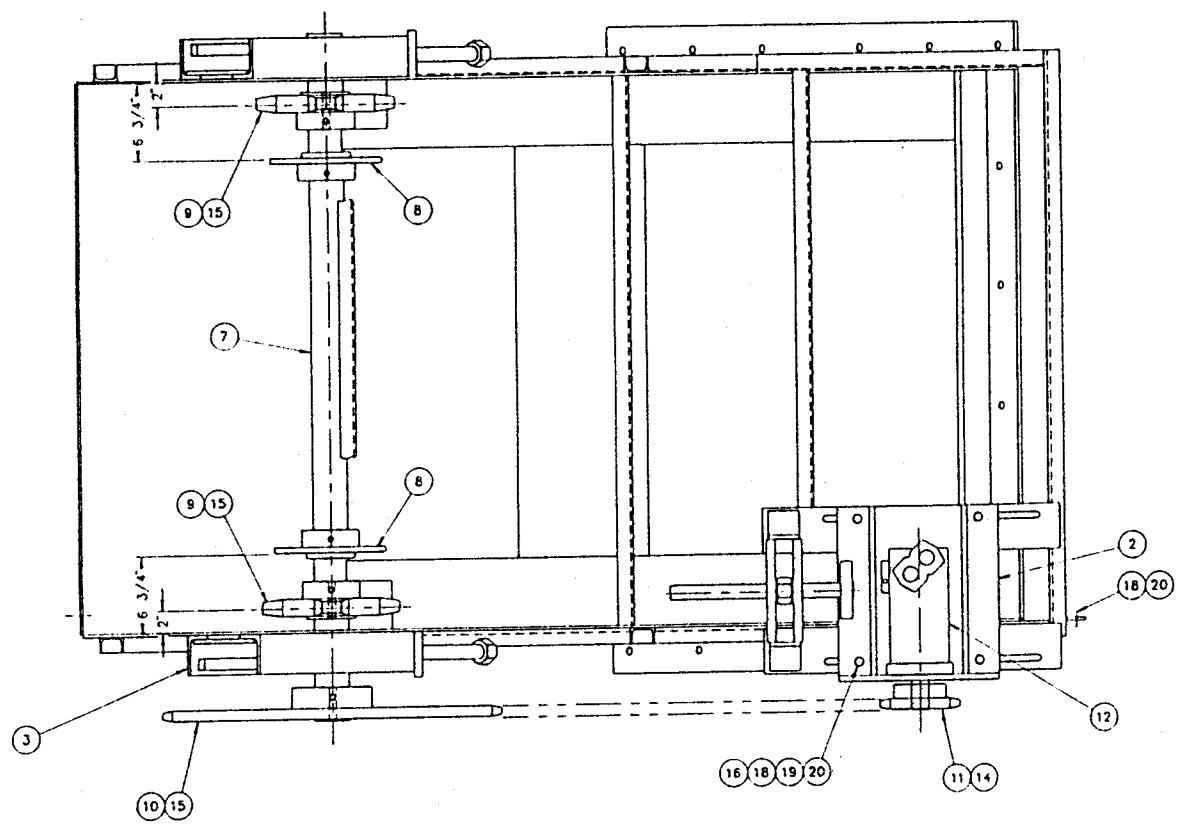

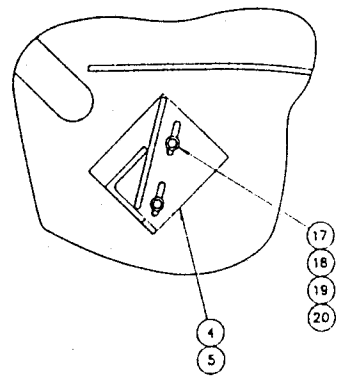

DETAIL 'A'

PARTS LIST					
QTY	BM	PART NUMBER	DESCRIPTION	CUT FROM	
1	1	D-22A-0084 G01	CONVEYOR HEAD SUB-ASSEMBLY		
1	2	C-22A-0065 G01	MOTOR MOUNT ASSEMLBY		
2	3	C-22A-0019 G01	CHAIN TAKE-UP ASSEMBLY		
1	4	B-22A-0066 G01	CLINKER DEFLECTOR, RIGHT		
1	5	B-22A-0066 G02	CLINKER DEFLECTOR, LEFT		
1	6	C-22A-0015 G01	DRIVE GUARD ASSEMBLY		
1	7	B-22Z-0419	DRIVE SHAFT, 3" DIA		
2	8	B-22B-0080 G01	CHAIN FLIGHT GUIDE WHEEL		
2	9	B-22S-0003	CHAIN FLIGHT SPROCKET, 4 TOOTH		
1	10	B-22S-0011 G01	120B60 DRIVE SPROCKET, 3" BORE		
1	11	C-22Z-3068	120B13 DRIVE SPROCKET		
1	12	16002009	CHARLYNN 6000-112-1068		
14	13	16003011	120 ANSI ROLLER CHAIN		
1	14	D-22A-0173 P14	3/8 KEY X 2	0.167	01004506
3	15	D-22A-0173 P13	5/8 KEY X 3	0.250	01004510
8	16	09001509	1/2-13 X 2 HEX HEAD BOLT		
4	17	09001507	1/2-13 X 1 1/2 HEX HEAD BOLT		
14	18	09004315	1/2-13 HEX NUT		
14	19	09005005	1/2 LOCK WASHER		
18	20	09004905	1/2 FLAT WASHER		

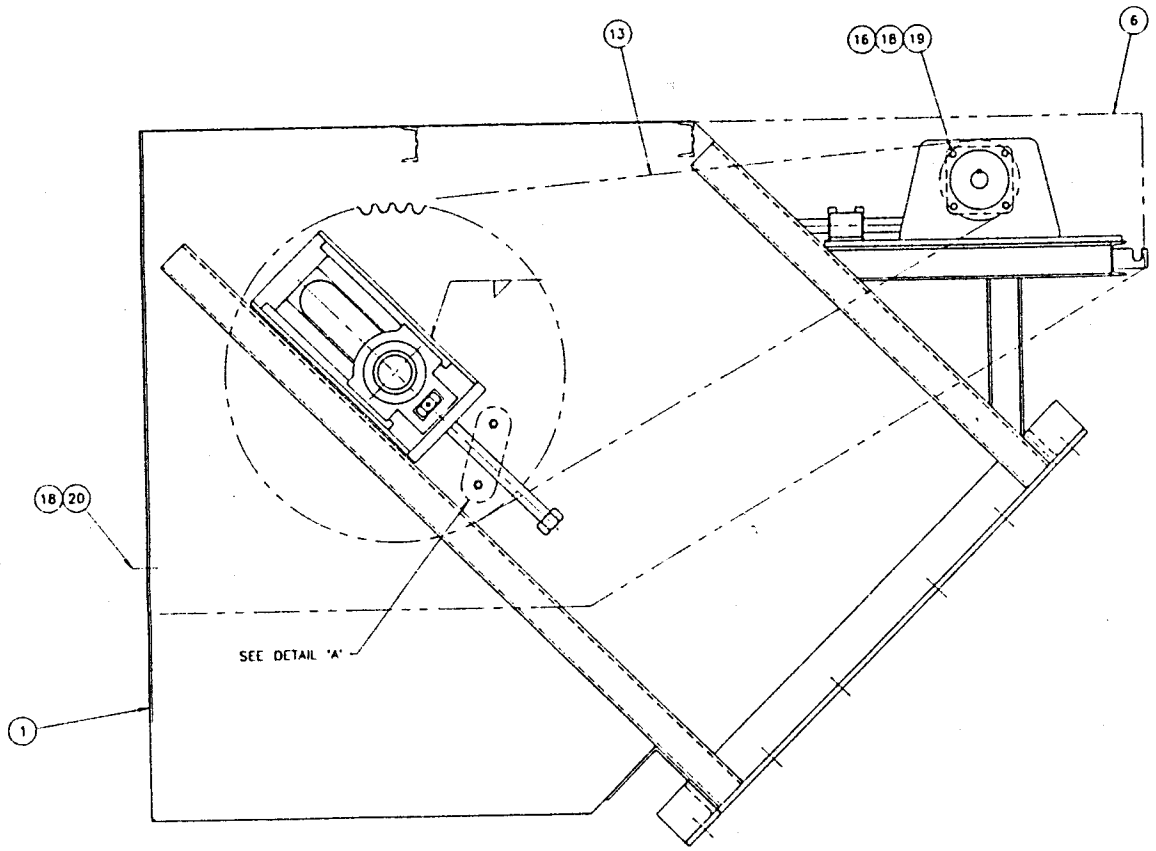

APPROX WT: 2200 LBS

THIS DRAWING IS THE PROPERTY OF CONSUMAT SYSTEMS, INC. AND IS TO BE USED ONLY FOR PRODUCING ITEMS ON ORDER FOR CONSUMAT SYSTEMS, INC. SUBJECT TO RETURN UPON DEMAND AND IS NOT TO BE PRINTED, PHOTOGRAPHED, COPIED, REPRODUCED, LOANED OR USED IN ANY WAY WITHOUT WRITTEN PERMISSION OF CONSUMAT SYSTEMS, INC

DR	BLJ	DATE	5/5/94
CHK		DATE	
APP		DATE	
APP		DATE	
ARCHIVE	368	PROJ NO.	P5185

CONSUMAT SYSTEMS, INC.
RICHMOND, VA. U.S.A.

TITLE
AC-48 CONVEYOR HEAD ASSEMBLY

NEXT HIGHER ASSY

DO NOT SCALE

SCALE 1 1/2" = 1'

REFERENCE

DWG. NO. D-22A-0173

SHEET OF

REV.

REV	REVISION	DATE	DR	CHK	APP	APP
C						
B						
A						

TOTAL WEIGHT	QTY	BM	PART NUMBER	DESCRIPTION	CUT FROM	
8904 #	1	1	D-047-0026	QUENCH CHAMBER TOP SECTION		
4645 #	1	2	D-047-0027	QUENCH CHAMBER MID SECTION		
9500 #	1	3	D-047-0028	QUENCH CHAMBER BASE SECTION		
1109 #	1	4	D-47A-0005	QUENCH SPRAY ACCESS PLATFORM ASSY		
3390 #	1	5	C-26A-0122	48" HOT GAS DUCT 90 DEG ELL		
4754 #	1	6	C-26B-0072	48" HOT GAS DUCT TEE		
3030 #	1	7	C-26F-0010	46" HOT GAS DUCT BASE SECTION		
5601 #	3	8	C-026-0218	46" HOT GAS DUCT STRAIGHT X 72" LG. △		
	1	9	C-34H-0025 G03	SPRAY NOZZLE ASSEMBLY #31618		
	REF	10		PLATFORM SUPPORT BEAM		
	48	11	09001805	3/4-10 X 2 HEX HEAD BOLT		
	48	12	09004317	3/4-10 HEX NUT		
	48	13	09004909	3/4 FLAT WASHER		
	240	14	09001305	3/8-16 X 1 HEX HEAD BOLT		
	240	15	09004312	3/8-16 HEX NUT		
	240	16	09004903	3/8 FLAT WASHER		
	2	17	02001223	AIR SET JOINT CEMENT (1008)		
2065 #	1	18	C-49F-0020	AIR QUENCH MIXER ASSEMBLY △		

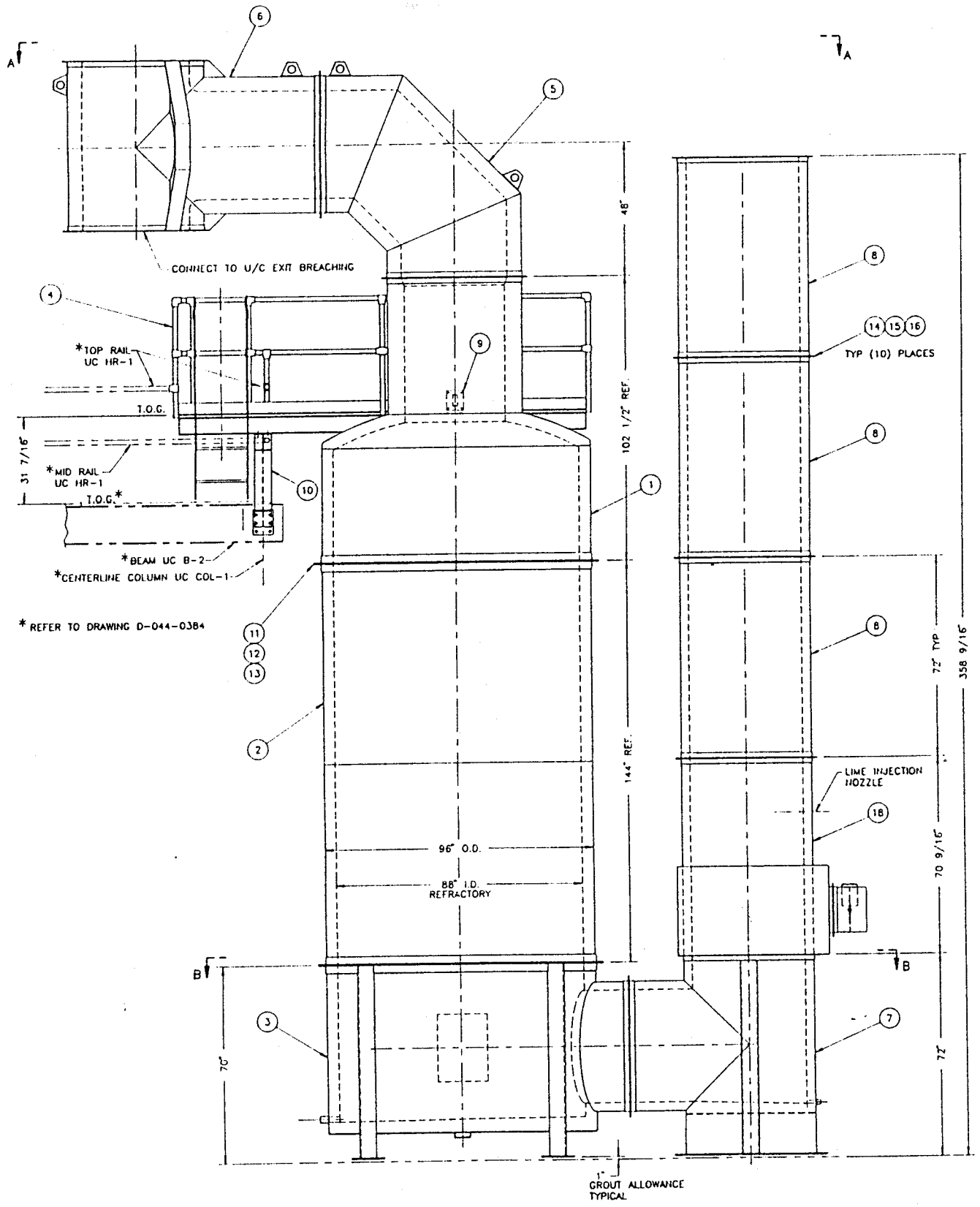

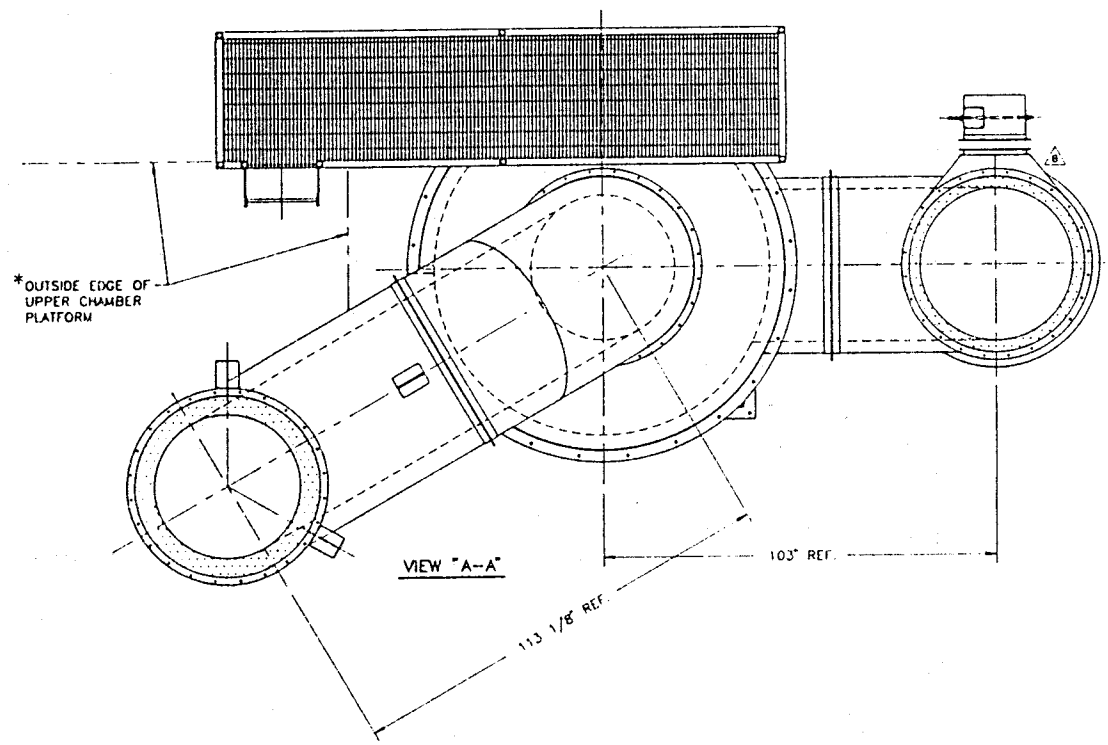

VIEW "A-A"

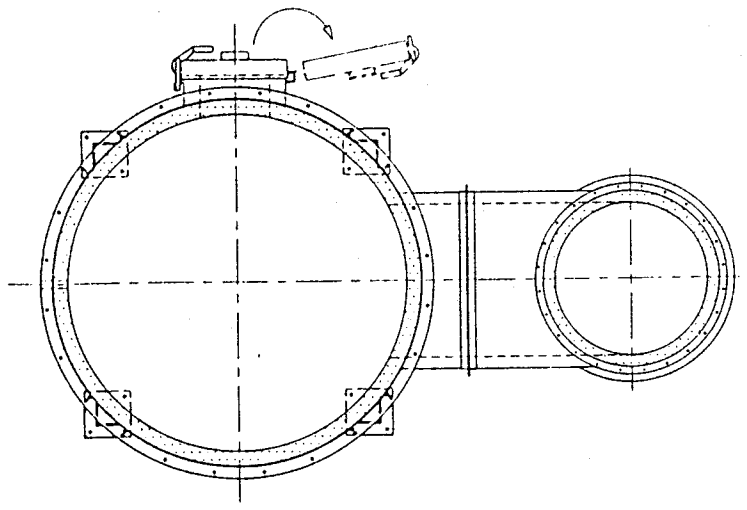

SECTION "B-B"

THIS DRAWING IS THE PROPERTY OF CONSUMAT SYSTEMS, INC. AND IS TO BE USED ONLY FOR PRODUCING ITEMS ON ORDER FOR CONSUMAT SYSTEMS, INC. SUBJECT TO RETURN UPON DEMAND AND IS NOT TO BE PRINTED, PHOTOGRAPHED, COPIED, REPRODUCED, LOANED OR USED IN ANY WAY WITHOUT WRITTEN PERMISSION OF CONSUMAT SYSTEMS, INC.

DR DEK	DATE 8-5-94	CONSUMAT SYSTEMS, INC. RICHMOND, VA. U.S.A.	
CHK	DATE		
APP	DATE	TITLE	
APP	DATE	QUENCH CHAMBER ASSEMBLY 96" O.D. BURROUGHS WELLCOME CO.	
ARCHIVE	PROJ NO. P5185		
NEXT HIGHER ASSY		SCALE 1/2" = 1'	DWG NO. D-047-0025
DO NOT SCALE		REFERENCE	SHEET 1 OF 1
			REV. C

REV	REVISION	DATE	DR	CHK	APP	APP
C	ADD WEIGHTS	11-08-94	DEK			
B	REV AIR QUENCH MIXER VIEWS	9-20-94	DEK			
A	REV QTY POS (4 WAS 3), ADD P18	9-12-94	DEK			

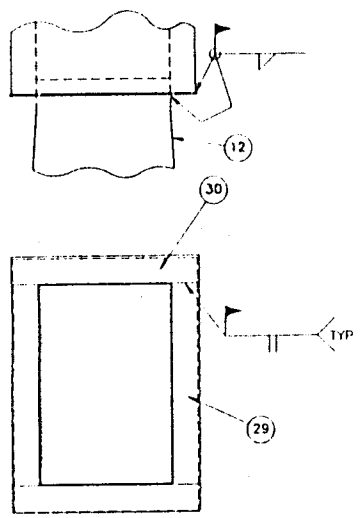

SECTION A-A

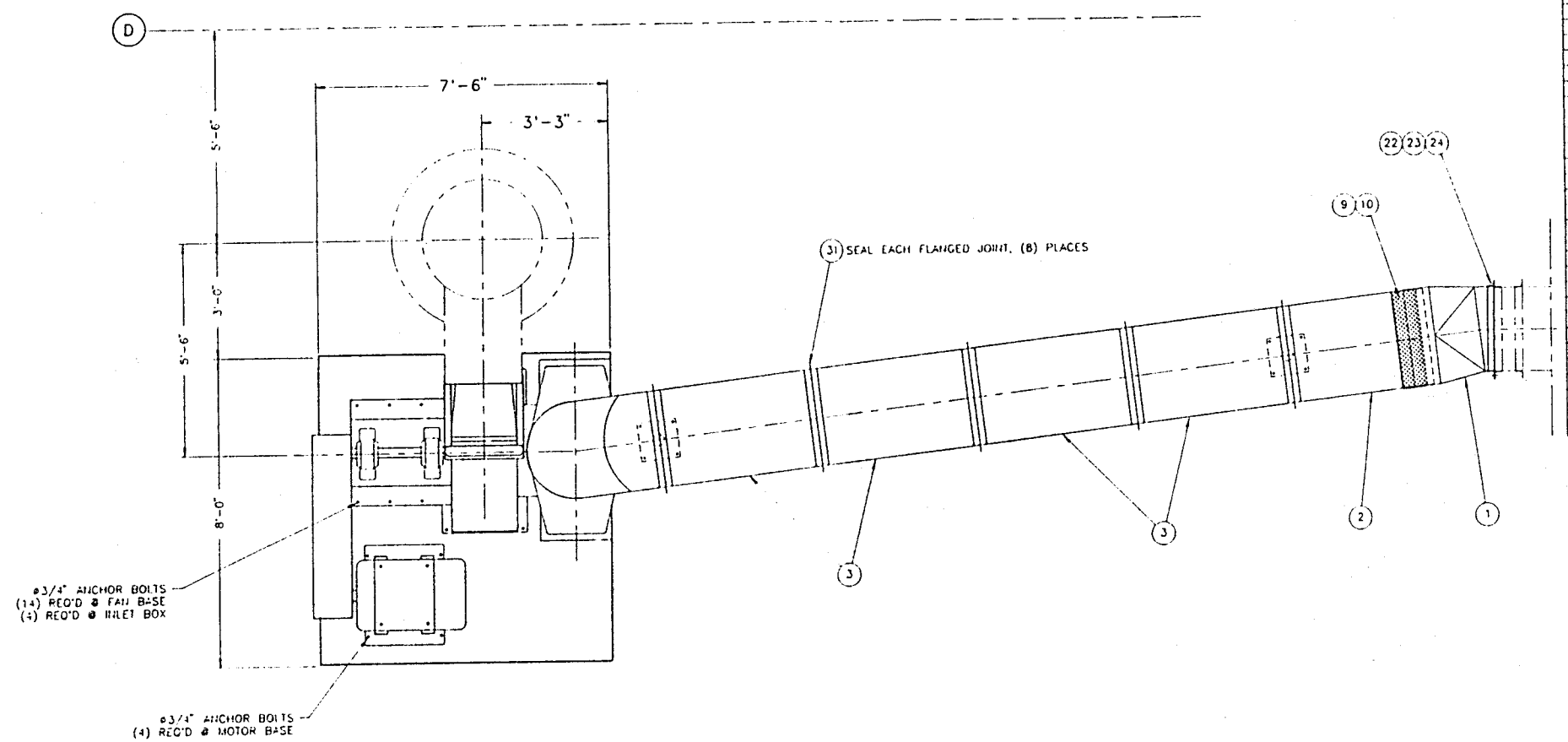

PARTS LIST					
QTY	BM	PART NUMBER	DESCRIPTION	CUT FROM	
1	1	C-28L-0151	S/S TRANSITION & SLIP JOINT		
1	2	B-28K-0229	30" DIA S/S DUCT X 44"		
1	3	B-28K-0230	30" DIA S/S DUCT X 49"		
1	4	B-28K-0231	30" DIA S/S DUCT X 18 1/2"		
1	5	B-28K-0228	30" DIA S/S 90 DEG EL		
1	6	C-28L-0152	FAN INLET TRANSITION		
1	7	C-28C-0232	EXPANSION JOINT, FAN INLET		
2	8	B-28P-0007	DUCT SUPPORT LEG		
1	9	D-028-0186 P09	1/8 X 8 SILICONE BELT X 192	16.00	02001433
2	10	09000080	BAND-IT CLAMP KIT		
1	11	C-28C-0233	EXPANSION JOINT, FAN OUTLET		
1	12	C-28L-0153	FAN OUTLET TRANSITION		
1	13	C-28M-0165	DAMPER ACTUATOR BRACKET		
1	14	10003355	FISHER 1052 SIZE 40 J MOUNT STYLE A		
1	15	10003361	FISHER 3620J POSITIONER W/ GAUGES		
1	16	10003363	FISHER #67AFR F/R AIRSET		
1	17	99000047	T/C 330RTF CLASS 23 FAN		
REF	18		FAN INLET BOX W/DAMPER		
REF	19		125 HP MOTOR		
REF	20		MOTOR SLIDEBASE		
8	21	09001306	3/8-16 X 1 1/4 HEX HEAD BOLT		
188	22	09001305	3/8-16 X 1 HEX HEAD BOLT		
196	23	09004312	3/8-16 HEX NUT		
196	24	09004903	3/8 FLAT WASHER		
112	25	09001507	1/2-13 X 1 1/2 HEX HEAD BOLT		
112	26	09004315	1/2-13 HEX NUT		
112	27	09004905	1/2 FLAT WASHER		
8	28	09005005	1/2 LOCK WASHER		
2	29	D-028-0186 P29	1/4 X 3-1/2 FB X 26 3/8	0.110	01001450
2	30	D-028-0186 P30	1/4 X 3-1/2 FB X 24 1/4	0.101	01001450
2	31	02002022	RTV SILICONE 8732 SEALANT		

NOTE: ALL ANCHOR BOLTS PROVIDED BY OTHERS.

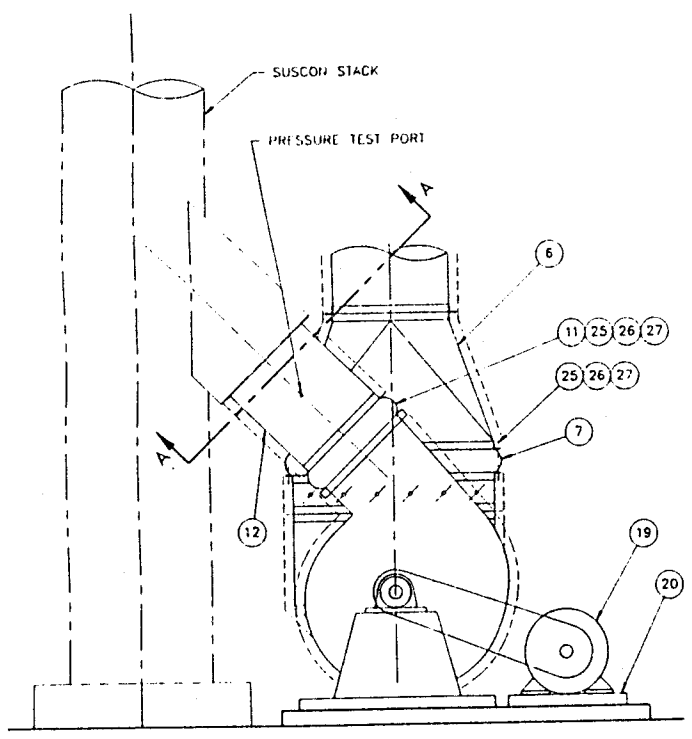

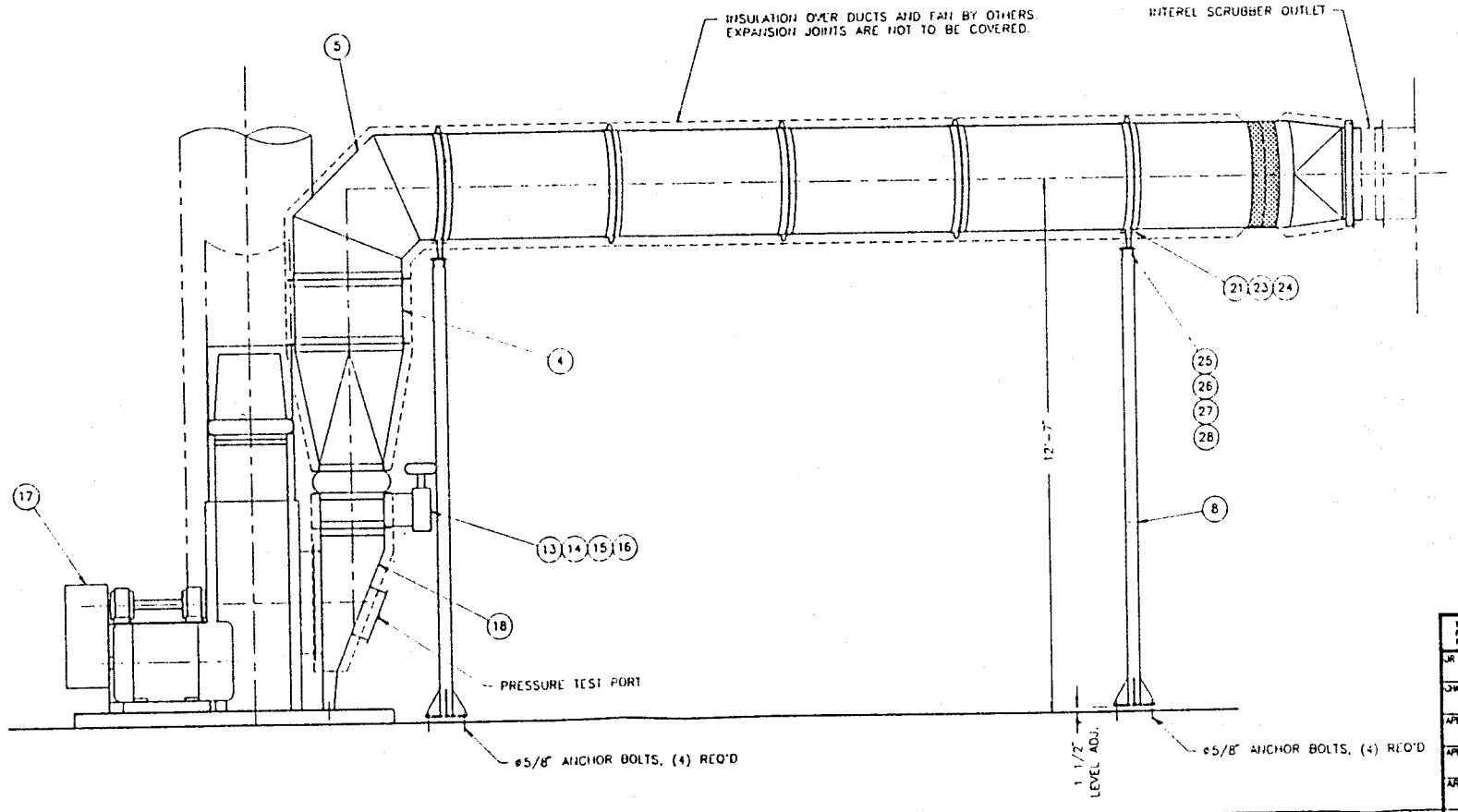

EQUIPMENT WEIGHTS:

DUCTWORK: 53 LBS/LIN FT
FAN ITEM 17: 1580 LBS
MOTOR ITEM 19: 1515 LBS

REV	REVISION	DATE	DR	CHK	APP	APP
C						
B	ADD NOTES FOR INSULATION & ANCHOR BOLTS	3-8-95	BLJ			
A	P14 WAS STYLE B	2-28-95	BLJ			

THIS DRAWING IS THE PROPERTY OF CONSUMAT SYSTEMS, INC. AND IS TO BE USED ONLY FOR PROPOSING ITEMS OR ORDER FOR CONSUMAT SYSTEMS, INC. SUBJECT TO RETURN UPON DEMAND AND IS NOT TO BE PRINTED, PHOTOGRAPHED, COPIED, REPRODUCED, LOANED OR USED IN ANY WAY WITHOUT WRITTEN PERMISSION OF CONSUMAT SYSTEMS, INC.

DR BLJ	DATE 12-13-94	CONSUMAT SYSTEMS, INC. RICHMOND, VA. U.S.A.
CHK	DATE	
APP	DATE	TITLE: I.D. FAN DUCT ASSEMBLY 30" DIA S/S
APP	DATE	
ARCHIVE	PROJ NO. P5185	
NEXT HIGHER ASSY		SCALE 1/2" = 1"
DO NOT SCALE		REFERENCE
		DWG NO. D-028-0186 SHEET OF
		REV. B

PARTS LIST					
QTY	BM	PART NUMBER	DESCRIPTION	CUT	FROM
1	1	C-26A-0125	46" HGD 90 DEG ELL REFRACT. LINED 40" ID		
1	2	C-26P-0076	40" HGD STRAIGHT X 109-7/8" LG.		
1	3	C-026-0221	40" HGD EXPANSION JOINT		
1	4	C-26N-0024	TRANSITION 48" SQ. TO 40" DIA		
1	5	C-26A-0124	48" SQ. HGD 94 DEG ELL		
1	6	C-26A-0123	48" SQ. HGD 90 DEG ELL		
REF	7	D-047-0025	Q.C. ASSEMBLY W/ DUCT		
252	8	09001305	3/8-16 X 1 HEX HEAD BOLT		
252	9	09004312	3/8-16 HEX NUT		
252	10	09004903	3/8 FLAT WASHER		

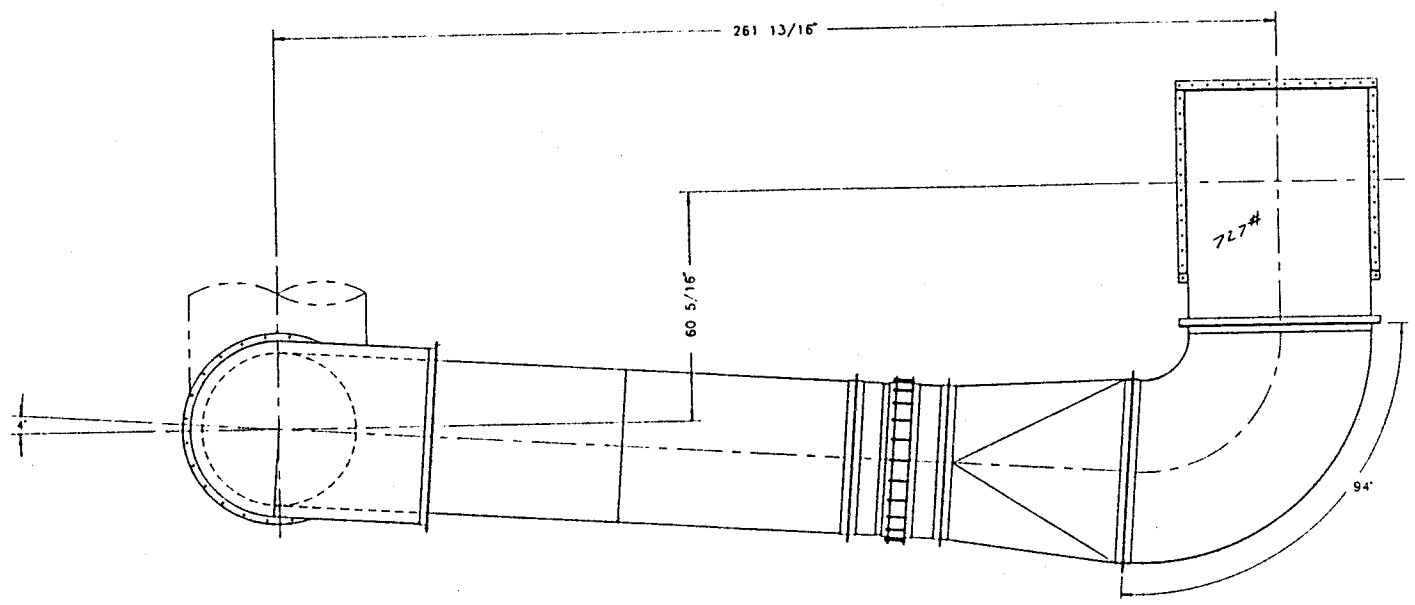

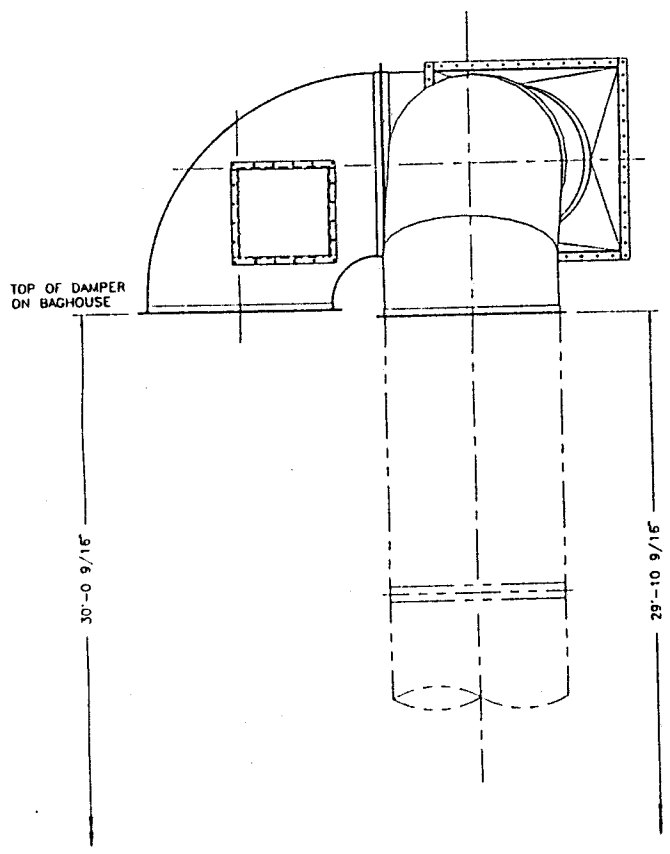

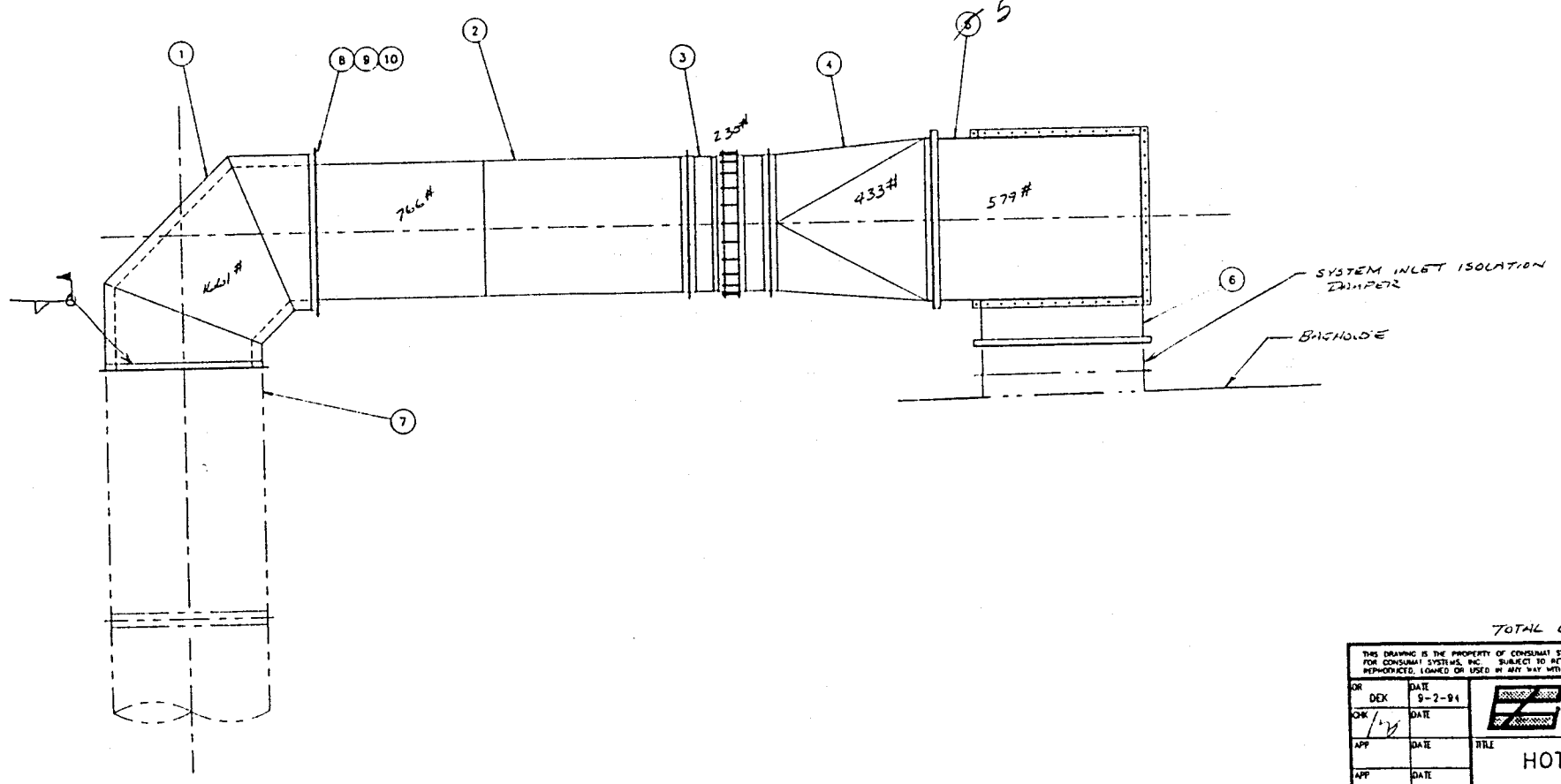

TOTAL WEIGHT: 4396#

THIS DRAWING IS THE PROPERTY OF CONSUMAT SYSTEMS, INC. AND IS TO BE USED ONLY FOR PRODUCING ITEMS ON ORDER FOR CONSUMAT SYSTEMS, INC. SUBJECT TO RETURN UPON DEMAND AND IS NOT TO BE PRINTED, PHOTOGRAPHED, COPIED, REPRODUCED, LOANED OR USED IN ANY WAY WITHOUT WRITTEN PERMISSION OF CONSUMAT SYSTEMS, INC.

DR DEX	DATE 9-2-94	CONSUMAT SYSTEMS, INC. RICHMOND, VA. U.S.A.	
CHK	DATE		
APP	DATE	TITLE HOT GAS DUCT ASSEMBLY Q.C. TO BAGHOUSE	
APP	DATE		
ARCHIVE	PROJ NO. P5185		
NEXT HIGHER ASSY		SCALE 1/2" = 1'	DWG NO. D-026-0219
DO NOT SCALE		REFERENCE	SHEET 1 OF 1

REV	REVISION	DATE	DR	CHK	APP	APP
A						
B						
C						
D						
E						
F						
G						
H						
I						

PARTS LIST					
QTY	BM	PART NUMBER	DESCRIPTION	CUT FROM	
1	1	D-032-0005	48" BYPASS VALVE ASSEMBLY		
1	2	C-26P-0047 G04	48" REFRACTORY STACK X 48 3/4" LG		
1	3	C-26P-0047 G06	48" REFRACTORY STACK X 40 3/4" LG		
1	4	B-025-0211	48" STAINLESS STEEL STACK X 48" LG		
96	5	09001305	3/8-16 X 1 HEX HEAD BOLT		
96	6	09004312	3/8-16 HEX NUT		
96	7	09004903	3/8 FLAT WASHER		

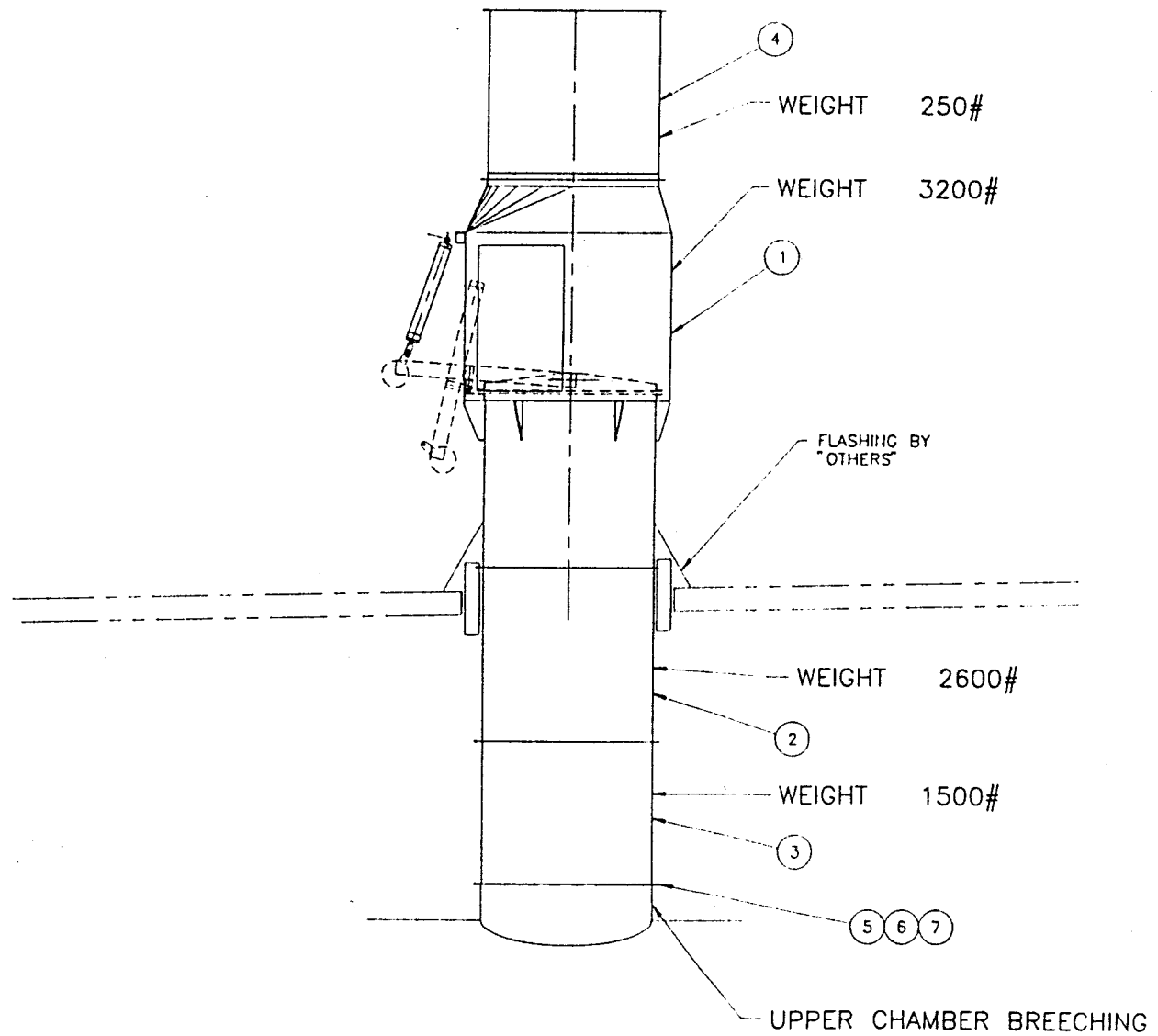

THIS DRAWING IS THE PROPERTY OF CONSUMAT SYSTEMS, INC. AND IS TO BE USED ONLY FOR PRODUCING ITEMS ON ORDER FOR CONSUMAT SYSTEMS, INC. SUBJECT TO RETURN UPON DEMAND AND IS NOT TO BE PRINTED, PHOTOGRAPHED, COPIED, REPRODUCED, LOANED OR USED IN ANY WAY WITHOUT WRITTEN PERMISSION OF CONSUMAT SYSTEMS, INC.

DR	DATE
TWC	8-11-94
CHK	DATE
APP	DATE
APP	DATE
ARCHIVE	PROJ NO. P-5185

CONSUMAT SYSTEMS, INC.
RICHMOND, VA. U.S.A.

TITLE
BYPASS STACK ASSEMBLY
48" BYPASS VALVE

REV	REVISION	DATE	DR	CHK	APP	APP
C						
B						
A						

REV	REVISION	DATE	DR	CHK	APP	APP
F						
E						
D						

NEXT HIGHER ASSY	SCALE	DWG. NO.	REV.
DO NOT SCALE	3/8" = 1'	C-025-0449	
	REFERENCE	SHEET 1 OF 1	

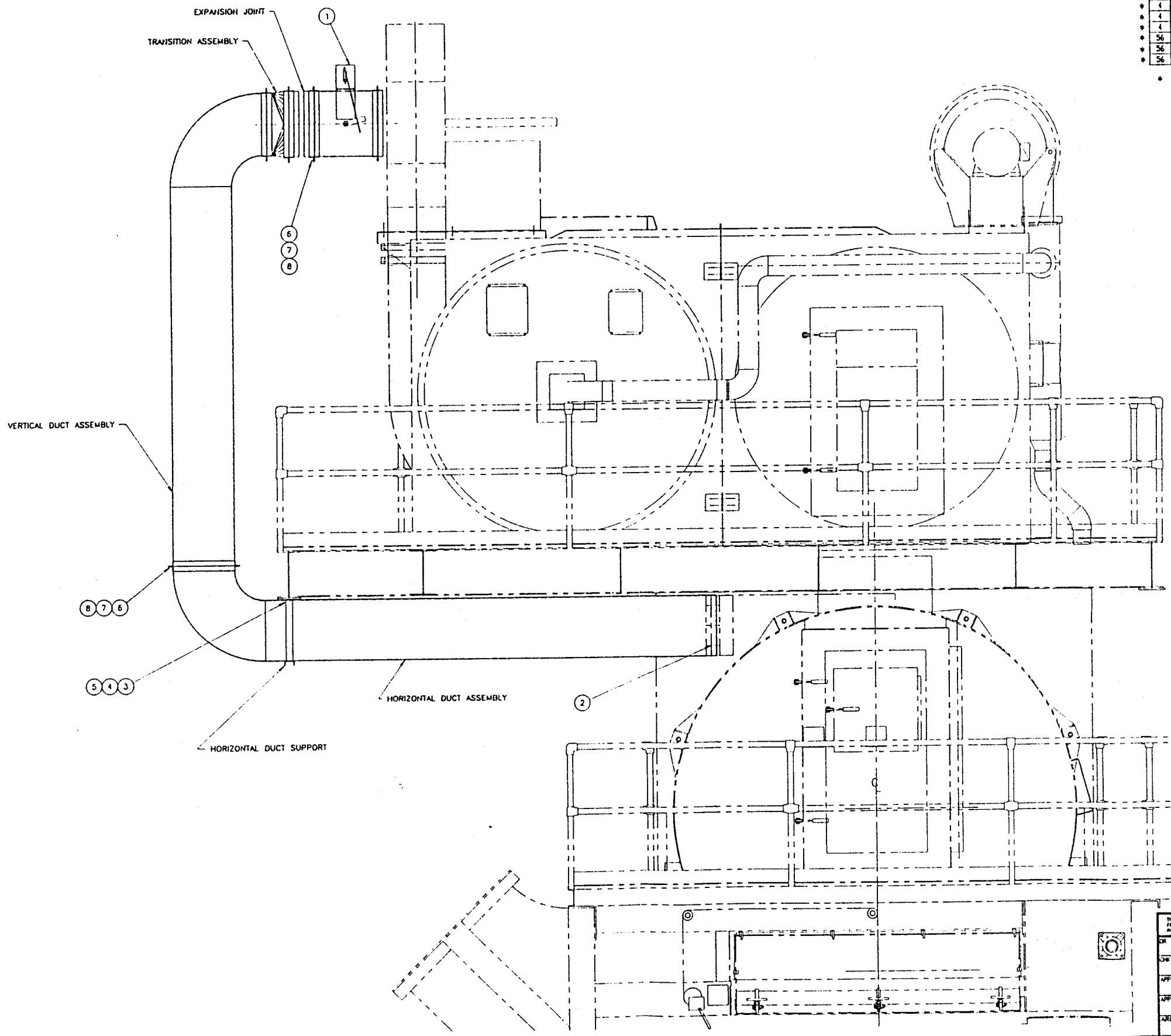

	PARTS LIST					
	QTY	BM	PART NUMBER	DESCRIPTION	CUT	FROM
	1	1	D-356-0170	DAMPER ASSEMBLY AH-19 FAN		
*	12	2	09006324	1/4 X 3/4 SELF TAPPING SCREW		
*	4	3	09001805	3/4-10 X 2 HEX HEAD BOLT		
*	4	4	09004317	3/4-10 HEX NUT		
*	4	5	09004909	3/4 FLAT WASHER		
*	56	6	09001307	3/8-16 X 1 1/2 HEX HEAD BOLT		
*	56	7	09004312	3/8-16 HEX NUT		
*	56	8	09004903	3/8 FLAT WASHER		

* FIELD ERECTION BOLTS

WEIGHT 1,050#

REV	REVISION	DATE	DR	CHK	APP	APP
C						
B						
A						

REV	REVISION	DATE	DR	CHK	APP	APP
F						
E						
D						

REV	REVISION	DATE	DR	CHK	APP	APP
I						
H						
G						

THIS DRAWING IS THE PROPERTY OF CONSUMAT SYSTEMS, INC. AND IS TO BE USED ONLY FOR PRODUCING ITEMS ON ORDER FOR CONSUMAT SYSTEMS, INC. SUBJECT TO RETURN UPON DEMAND AND IS NOT TO BE PRINTED, PHOTOGRAPHED, COPIED, REPRODUCED, LOANED OR USED IN ANY WAY WITHOUT WRITTEN PERMISSION OF CONSUMAT SYSTEMS, INC.

DR	TWC	DATE 9-2-94
CHK		DATE
APP		DATE
APP		DATE
ARCHIVE		PROJ NO. P-5185

CONSUMAT SYSTEMS, INC.
RICHMOND, VA. U.S.A.

TITLE
L/C TO U/C
CONNECTING DUCT
CS-760

NEXT HIGHER ASSY	SCALE 3/4" = 1'	DWG. NO. D-24M-0027
DO NOT SCALE	REFERENCE	SHEET 1 OF 2

REV.

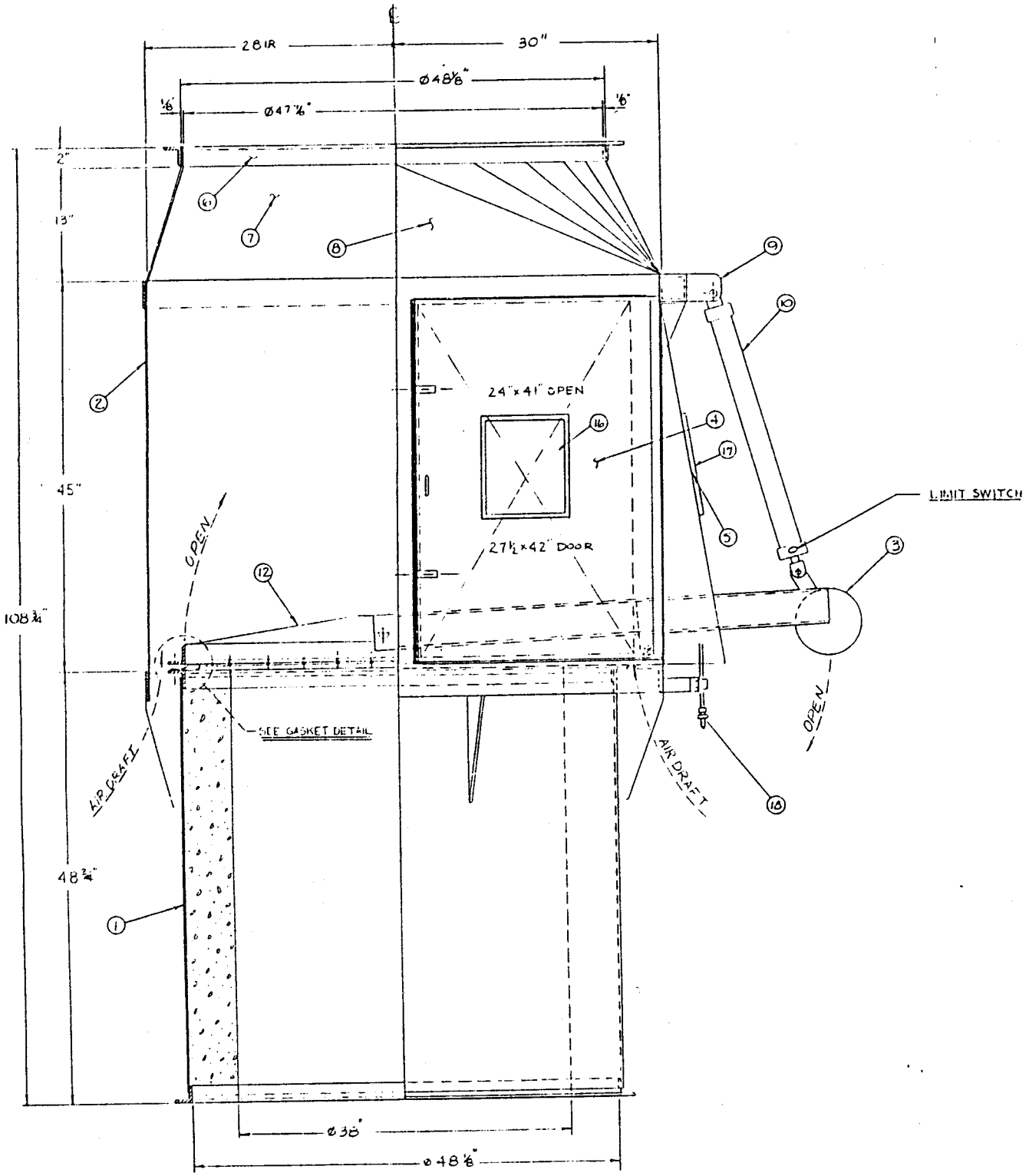

HALF SECTION SIDE ELEVATION

PARTS LIST			
ITEM	PART	DESCRIPTION	REQ'D
1	D-322-0006-G01	BASE	1
2	D 32A-0003-G01	HOUSING	1
3	D 32B-0004-G01	VALVE ARM	1
4	D 32G-0001-G01	INSPECTION DOOR	1
5	D 32B-0001-G01	CYL. PROTECTIVE SHIELD	1
6		Ø 48⅛ I.D. RING (2"x2"x 3/16")	1
7	D-32E-0008-P01	TOP CONE SECTION	1
8	D-322-0030-G01	TOP SQUARE TO ROUND SECTION	1
9	D 32J-0004-P06	TOP CYL. MOUNT	1
10	[illegible]	CYL. NO ACTUATOR SHIELD 5¼" W/ 1⅜ BRD.	1
11		1" TADPOLE ASBESTOS GASKET x 151"	1
12	D 32C-0006-G01	VALVE DISC	1
13		¼-20 RD HD S.S. x 1"	4B
14		¼"-20 HEX NUT	4B
15		1" DIA WASHER	4B
16	H-8	CAUTION DECAL	2
17		STAND-OFF	2
18	D-32C-0004	BYPASS VALVE PNEU. PIPING	1

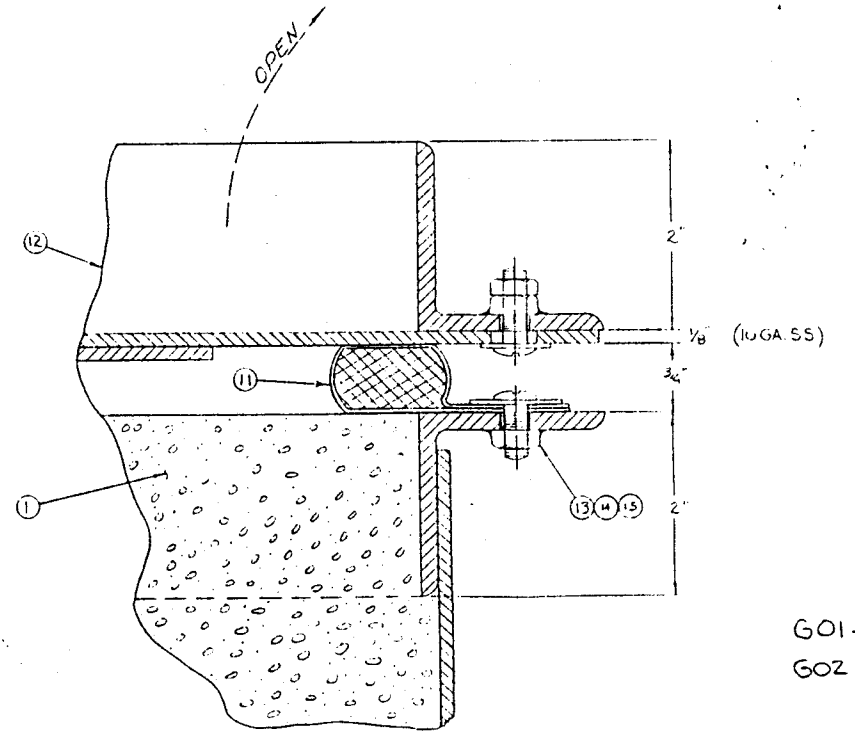

GASKET DETAIL
SCALE: FULL

G01 - AS SHOWN
G02 - OPPOSITE HAND

THIS DRAWING IS THE PROPERTY OF CONSUMAT SYSTEMS INC., AND IS TO BE USED ONLY FOR PRODUCING ITEMS ON ORDER FOR CONSUMAT SYSTEMS INC. SUBJECT TO RETURN UPON DEMAND AND IS NOT TO BE PRINTED, PHOTOGRAPHED, COPIED, REPRODUCED, LOANED OR USED IN ANY WAY WITHOUT WRITTEN PERMISSION OF CONSUMAT SYSTEMS INC.

NO.	REVISION	DATE	BY

374	567	D INS 116
D/L	B/M	NEXT HIGHER ASSY

24" STACK VALVE ASSY.

Consumat Systems, Inc.
RICHMOND, VIRGINIA U.S.A.

SCALE 1/8"=1"	DRAWN [illegible]	DRAWING NO. D-32-0005
DATE 1-18-80	CHK	REV.
	APPR.	

PARTS LIST				
QTY	ITM	PART NUMBER	DESCRIPTION	CUT FROM
1	1	D-043-0379	STAIR ASSEMBLY	
1	2	D-044-0385	ACCESS LANDING ASSEMBLY	
1	3	D-44A-0049	LOWER CHAMBER ACCESS PLATFORM ASSEMBLY	
1	4	D-044-0383	LOADER SUPPORT AND WALKWAY ASSEMBLY	
1	5	D-044-0384	UPPER CHAMBER PLATFORM ASSEMBLY	

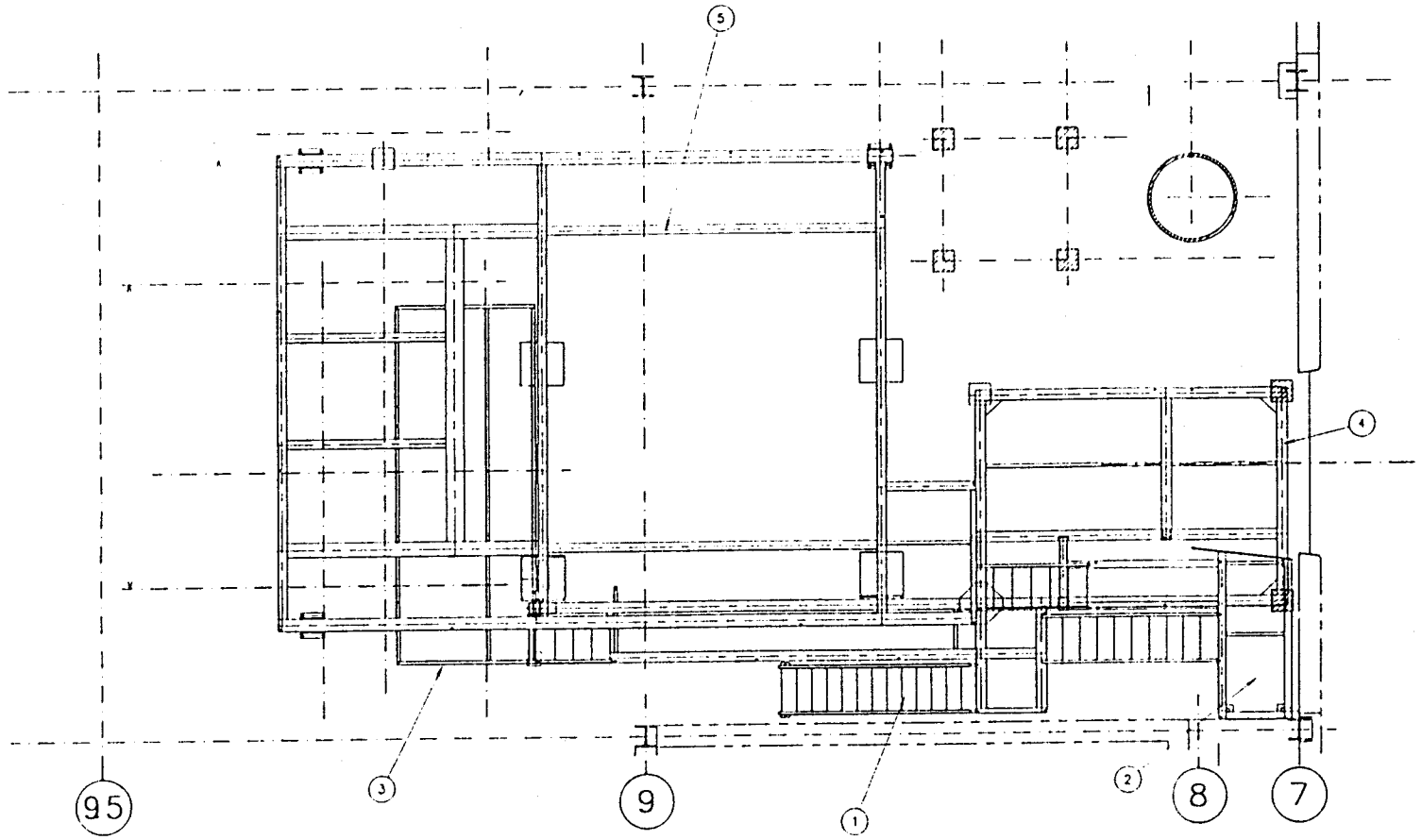

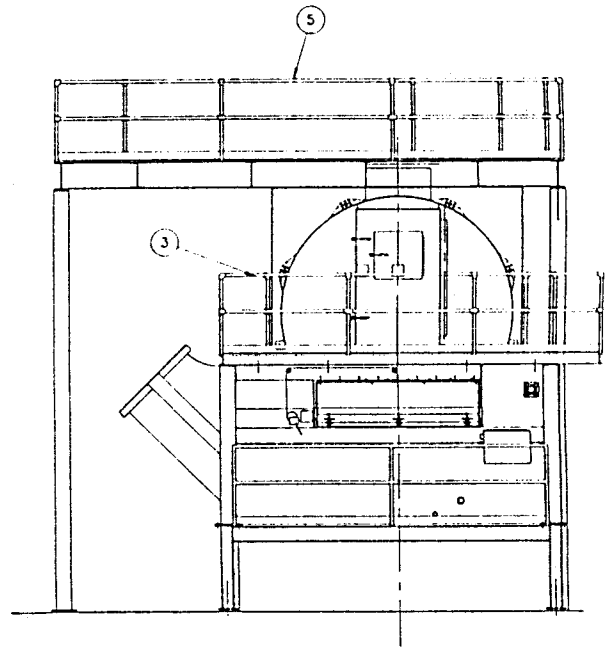

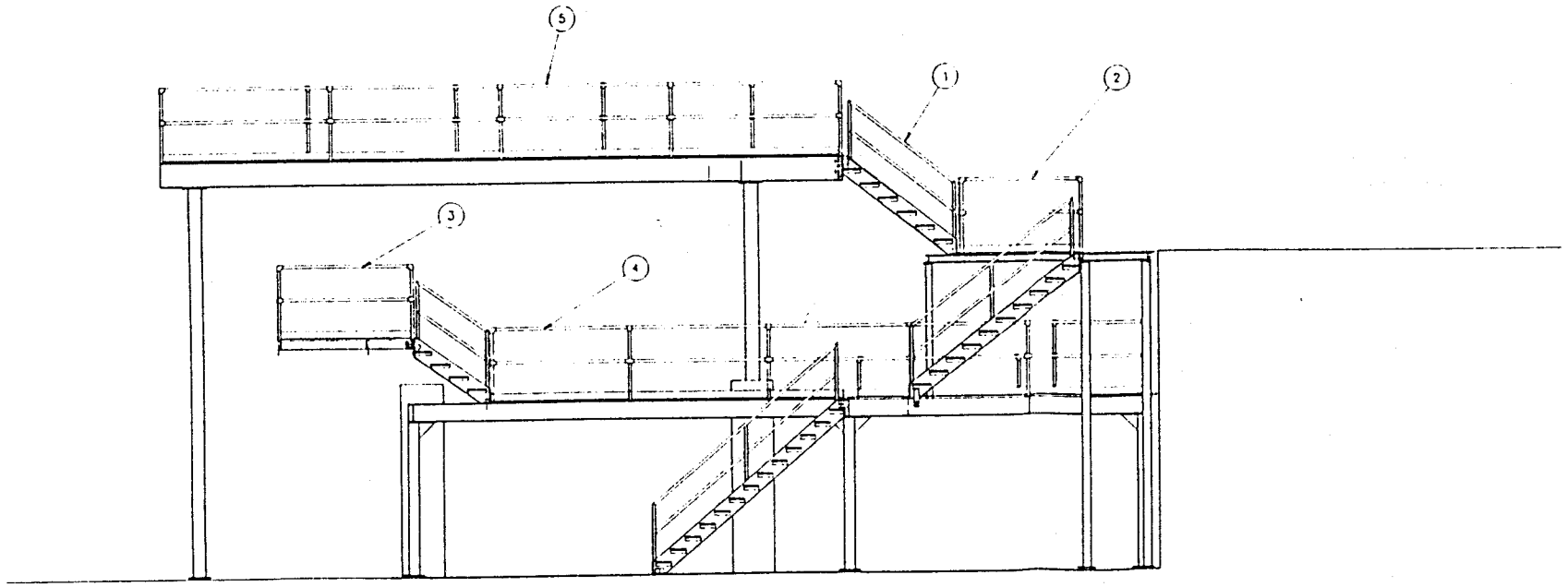

THIS DRAWING IS THE PROPERTY OF CONSUMAT SYSTEMS, INC. AND IS TO BE USED ONLY FOR PURPOSES IN ANY WAY FOR CONSUMAT SYSTEMS, INC. SUBJECT TO RETURN UPON DEMAND AND IS NOT TO BE PRINTED, PHOTOGRAPHED, TRACED, REPRODUCED, LOANED OR USED IN ANY WAY WITHOUT WRITTEN PERMISSION OF CONSUMAT SYSTEMS, INC.

DR	TWC	DATE 8-9-94
CHK		DATE
APP		DATE
APP		DATE
ARCHIVE		PROJ NO. P-5185
NEXT HIGHER ASSY		
DO NOT SCALE		

CONSUMAT SYSTEMS, INC.
RICHMOND, VA. U.S.A.

TITLE
STRUCTURAL ASSEMBLY

SCALE	DWG NO.	REV.
1/4" = 1'	D-043-0380	
REFERENCE	SHEET 1 OF 1	

REV	REVISION	DATE	DR	CHK	APP	APP
C						
B						
A						
REV	REVISION	DATE	DR	CHK	APP	APP
F						
E						
D						
REV	REVISION	DATE	DR	CHK	APP	APP
I						
H						
G						
REV	REVISION	DATE	DR	CHK	APP	APP

PARTS LIST					
QTY	BM	PART NUMBER	DESCRIPTION	CUT FROM	
64	1	09001806	3/4-10 X 2 1/4 HEX HEAD BOLT		
64	2	09004317	3/4-10 HEX NUT		
64	3	09004909	3/4 FLAT WASHER		
64	4	09005008	3/4 LOCK WASHER		

FIELD ERECTION BOLTS

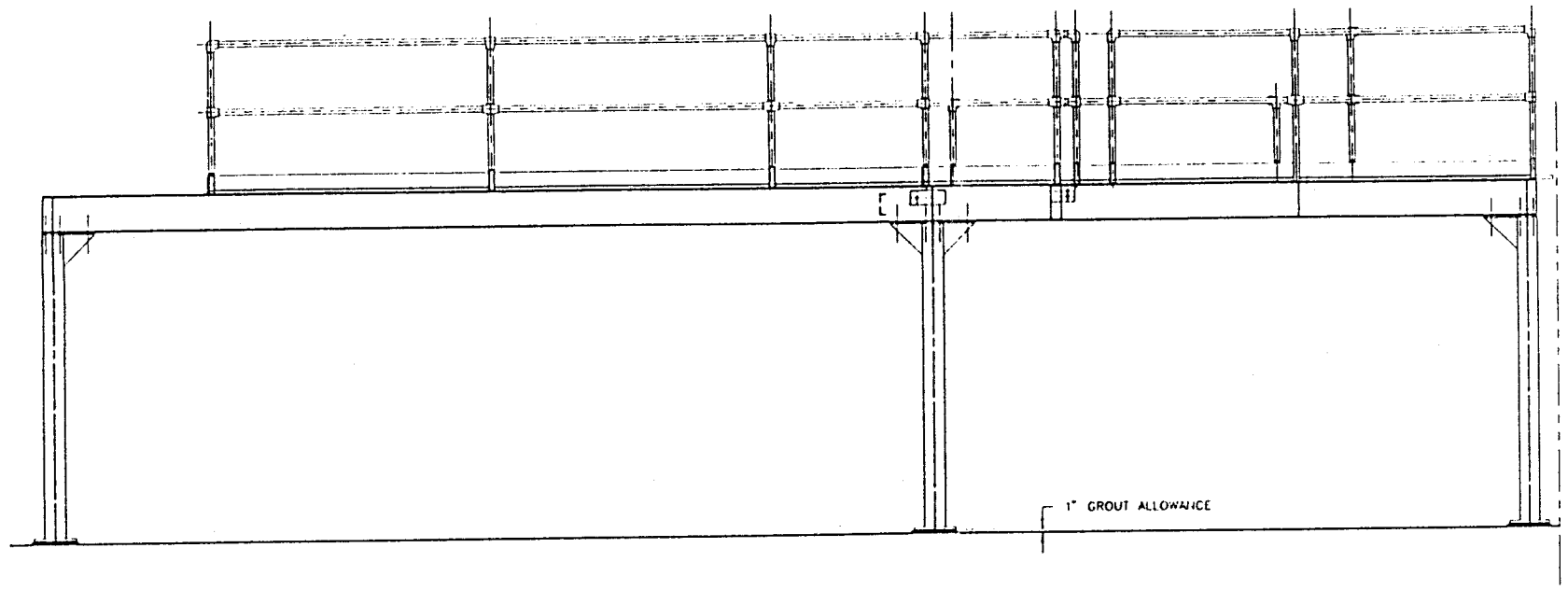

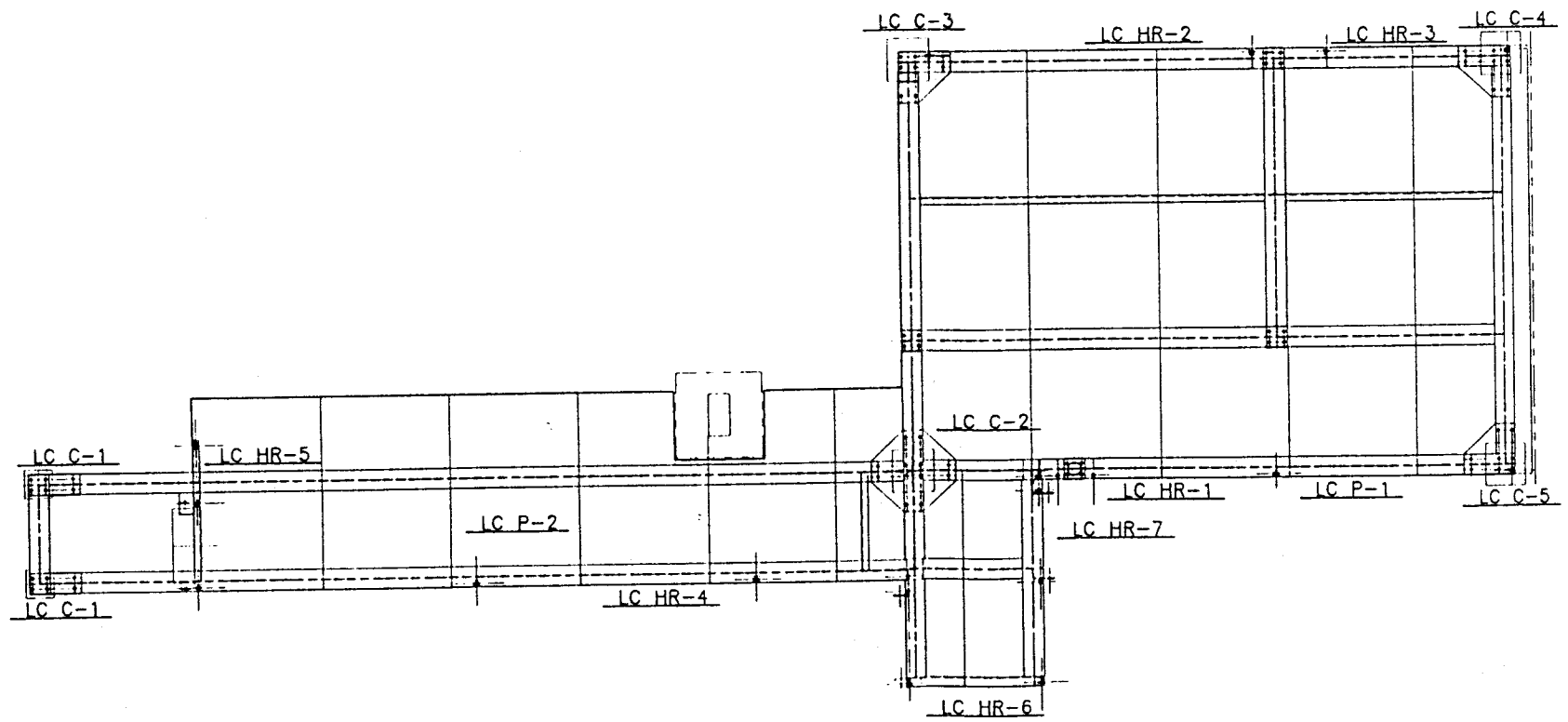

WEIGHT 8600#

REV	REVISION	DATE	DR	CHK	APP	APP
C						
B	QTY OF BOLTS WAS 60	12-7-94	TWC			
A	ADDED STAIR CONNECTIONS	8-3-94	TWC			

THIS DRAWING IS THE PROPERTY OF CONSUMAT SYSTEMS, INC. AND IS TO BE USED ONLY FOR PRODUCING ITEMS ON ORDER FOR CONSUMAT SYSTEMS, INC. SUBJECT TO RETURN UPON DEMAND AND IS NOT TO BE PRINTED, PHOTOGRAPHED, COPIED, REPRODUCED, LOANED OR USED IN ANY WAY WITHOUT WRITTEN PERMISSION OF CONSUMAT SYSTEMS, INC

DR TWC	DATE 6-21-94	CONSUMAT SYSTEMS, INC. RICHMOND, VA. U.S.A.	
CHK	DATE		
APP	DATE	TITLE	
APP	DATE	LOADER SUPPORT STRUCTURE ASSEMBLY	
ARCHIVE	PROJ NO. P-5185		
MDT HIGHER ASSY		SCALE 1/2" = 1'	DWG NO. D-044-0383 REV. B
DO NOT SCALE		REFERENCE	SHEET 1 OF 4

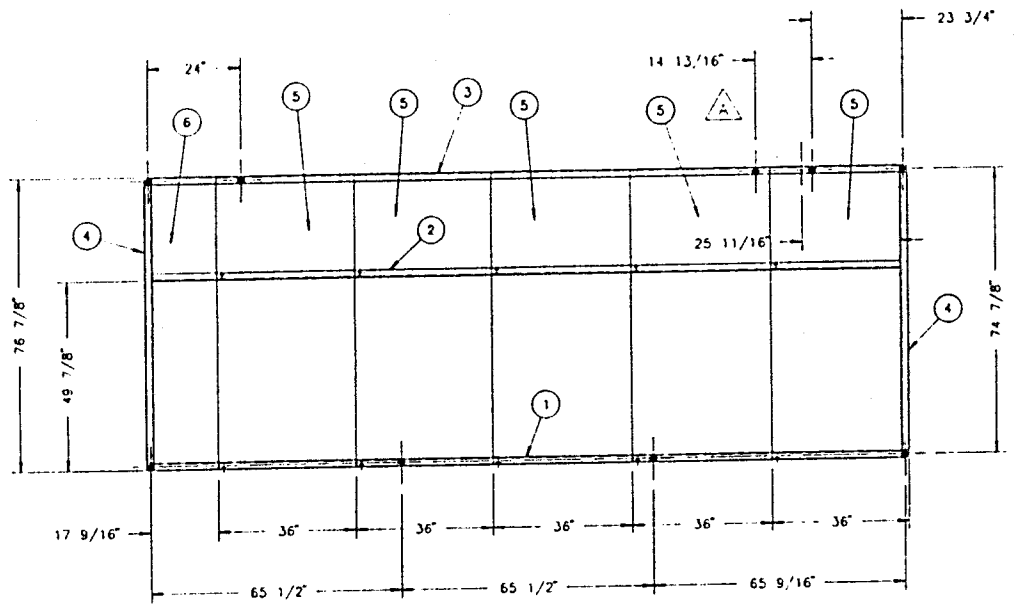

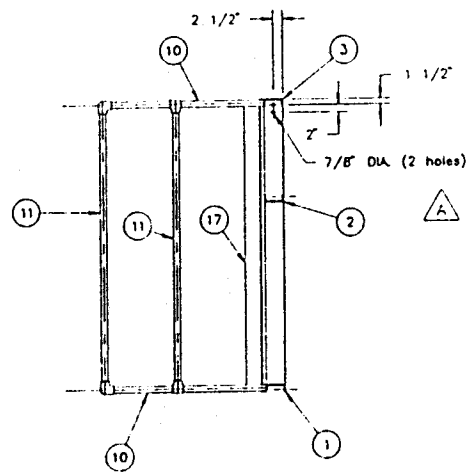

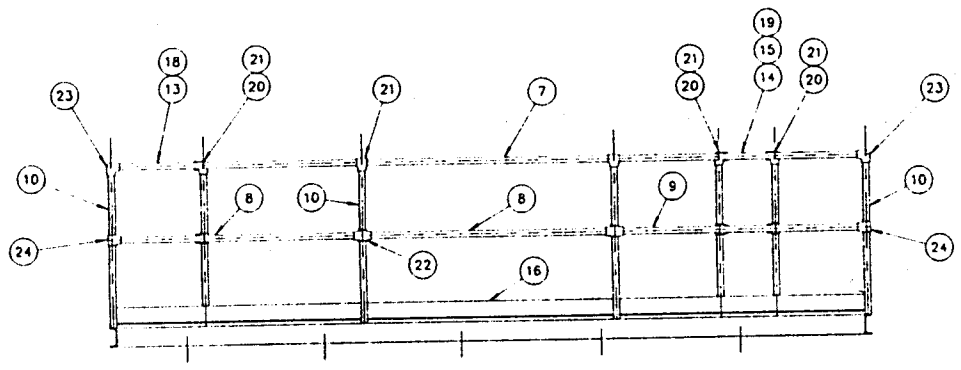

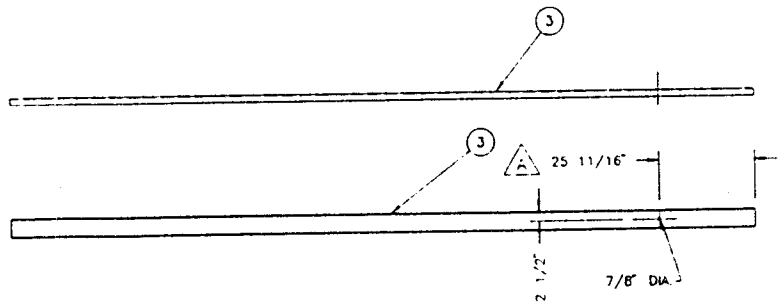

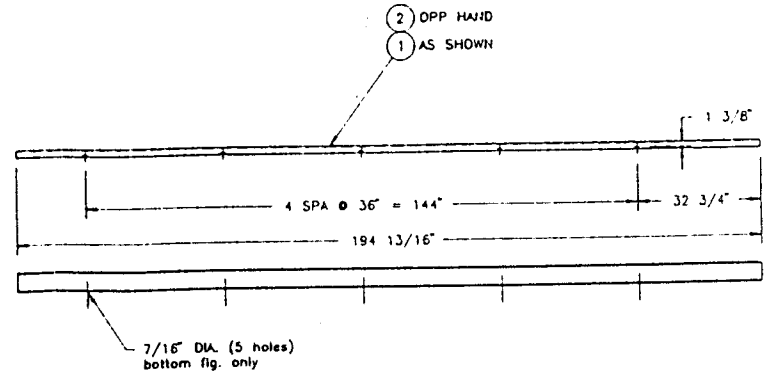

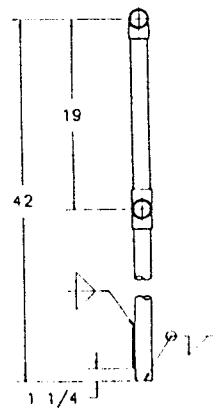

NO SCALE

WEIGHT 1750#

PARTS LIST

QTY	ITM	PART NUMBER	DESCRIPTION	CUT FROM	
1	1	D-44A-0049 P01	C5 X 9.0 X 194 13/16	0.812	01004059
1	2	D-44A-0049 P02	C5 X 9.0 X 194 13/16	0.812	01004059
1	3	D-44A-0049 P03	C5 X 9.0 X 194 13/16	0.812	01004059
2	4	D-44A-0049 P04	C5 X 9.0 X 76 7/8	0.320	01004059
5	5	D-44A-0049 P05	GRATING,3/16 X 1 BEAR.BARS,36 X 76 7/8	0.320	01000960
1	6	D-44A-0049 P06	GRATING,3/16 X 1 BEAR.BARS,17 9/16X76 7/8	0.320	01000960
1	7	D-44A-0049 P07	1 1/4 SCH 40 PIPE X 194 7/8	16.24	01005020
2	8	D-44A-0049 P08	1 1/4 SCH 40 PIPE X 63 13/16	5.32	01005020
1	9	D-44A-0049 P09	1 1/4 SCH 40 PIPE X 63 7/8	5.32	01005020
1	10	D-44A-0049 P10	1 1/4 SCH 40 PIPE X 41	3.42	01005020
2	11	D-44A-0049 P11	1 1/4 SCH 40 PIPE X 74 7/8	6.24	01005020
2	12	D-44A-0049 P12	1 1/4 SCH 40 PIPE X 73 3/16	6.10	01005020
2	13	D-44A-0049 P13	1 1/4 SCH 40 PIPE X 22 5/16	1.86	01005020
1	14	D-44A-0049 P14	1 1/4 SCH 40 PIPE X 14 13/16	1.23	01005020
1	15	D-44A-0049 P15	1 1/4 SCH 40 PIPE X 13 1/8	1.09	01005020
1	16	D-44A-0049 P16	1/4 X 4 FB X 196 9/16	0.019	01001464
2	17	D-44A-0049 P17	1/4 X 4 FB X 74 7/8	0.312	01001464
1	18	D-44A-0049 P18	1/4 X 4 FB X 24	0.100	01001464
1	19	D-44A-0049 P19	1/4 X 4 FB X 14 13/16	0.062	01001464
4	20	16004000	SPEEDRAIL #3 ELBOW 1 1/4 PIPE		
6	21	16004001	SPEEDRAIL #5 TEE 1 1/4 PIPE		
2	22	16004002	SPEEDRAIL #7 CROSS 1 1/4 PIPE		
3	23	16004003	SPEEDRAIL #9 S.O. ELL 1 1/4 PIPE		
3	24	16004004	SPEEDRAIL #11 S.O. TEE 1 1/4 PIPE		

THIS DRAWING IS THE PROPERTY OF CONSUMAT SYSTEMS, INC. AND IS TO BE USED ONLY FOR PRODUCING ITEMS ON ORDER FOR CONSUMAT SYSTEMS, INC. SUBJECT TO RETURN UPON DEMAND AND IS NOT TO BE PRINTED, PHOTOGRAPHED, COPIED, REPRODUCED, LOANED OR USED IN ANY WAY WITHOUT WRITTEN PERMISSION OF CONSUMAT SYSTEMS, INC.

DR	DATE
TWC	7-13-94
CHK	DATE
APP	DATE
APP	DATE
ARCHIVE	PROJ NO. P-5185

CONSUMAT SYSTEMS, INC.
RICHMOND, VA. U.S.A.

TITLE
LOWER CHAMBER ACCESS PLATFORM ASSEMBLY

NEXT HIGHER ASSY
DO NOT SCALE

SCALE 1/2" = 1'
REFERENCE

DWG NO. D-44A-0049
SHEET 1 OF 1

REV A

REV	REVISION	DATE	DR	CHK	APP	APP
A	ADDED HOLES FOR STAIRS	8-3-94	TWC			

PARTS LIST				
QTY	BM	PART NUMBER	DESCRIPTION	CUT FROM
16	1	09001805	3/4-10 X 2 HEX HEAD BOLT	
16	2	09004317	3/4-10 HEX NUT	
16	3	09004909	3/4 FLAT WASHER	
16	4	09005008	3/4 LOCK WASHER	

FIELD ERECTION BOLTS

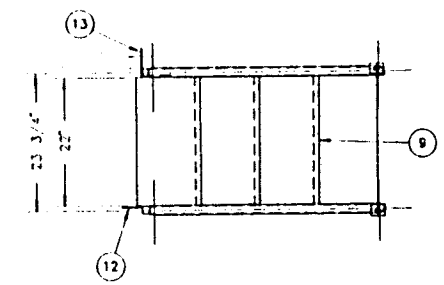

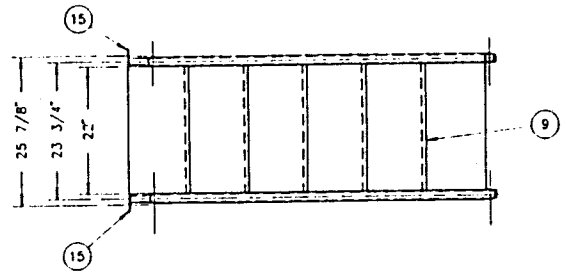

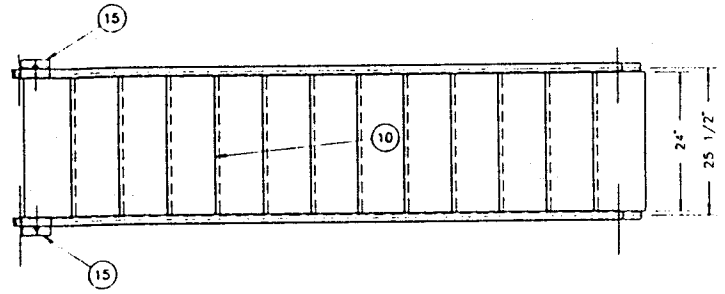

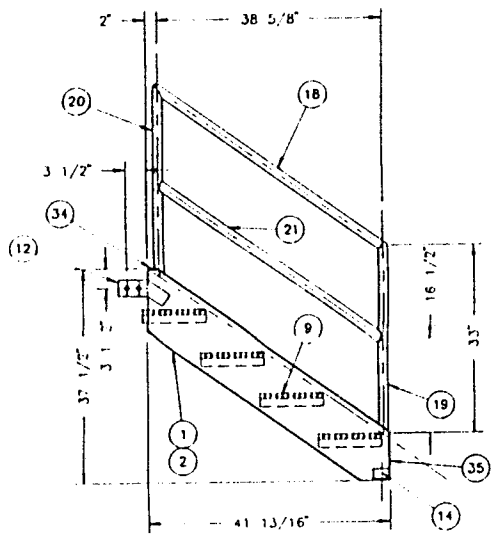

ST-4
(1 REQ'D)

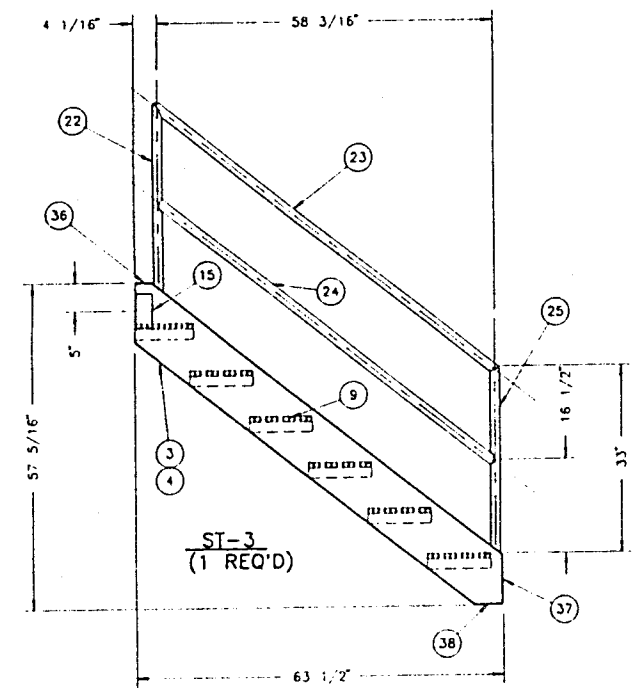

ST-3
(1 REQ'D)

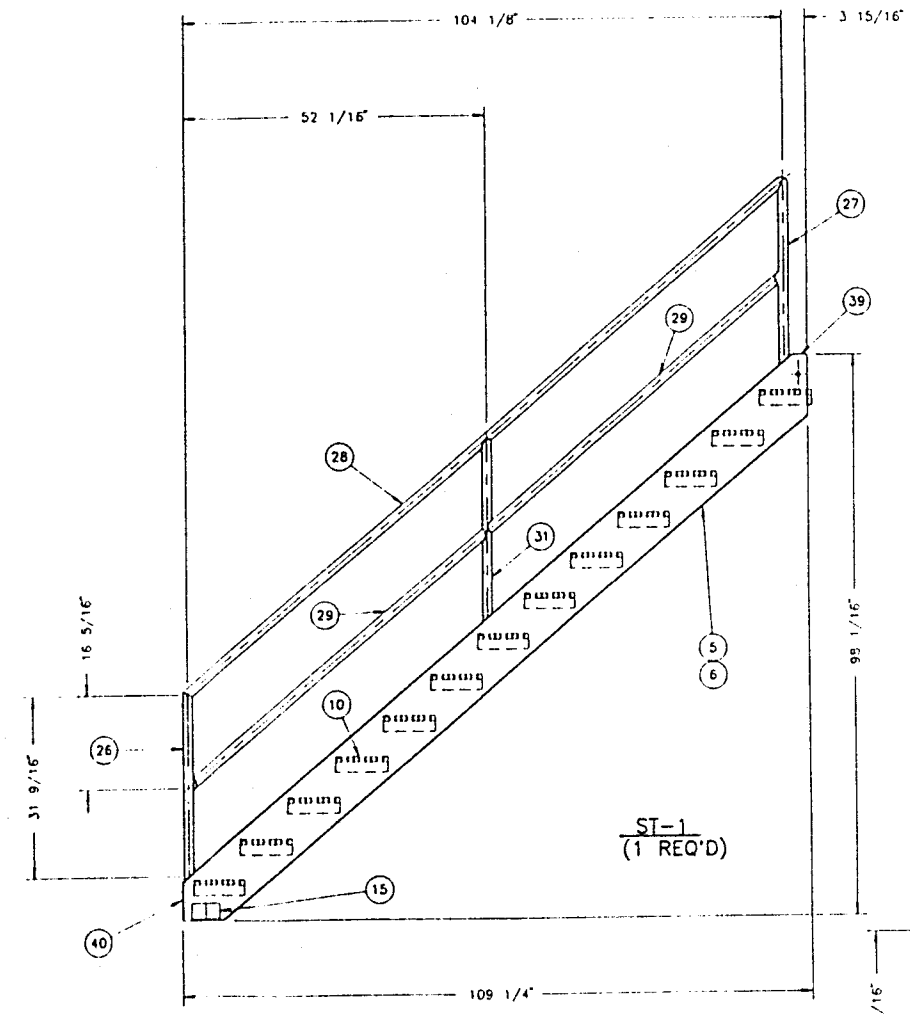

ST-1
(1 REQ'D)

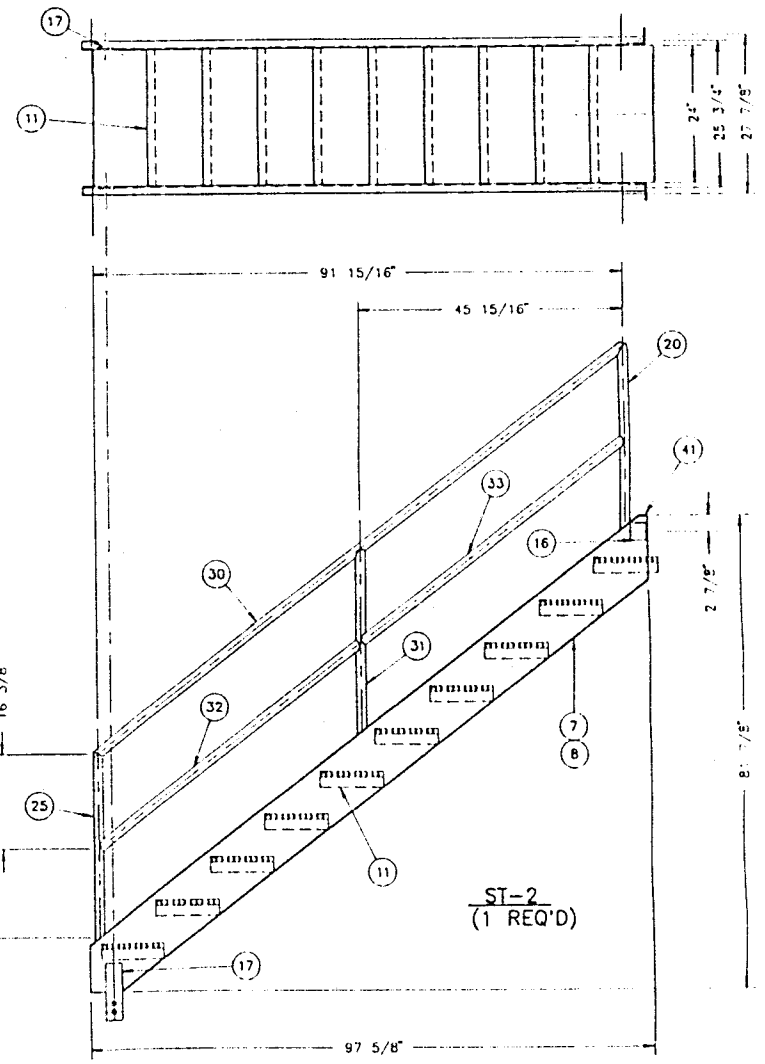

ST-2
(1 REQ'D)

WEIGHT 1450#

THIS DRAWING IS THE PROPERTY OF CONSUMAT SYSTEMS, INC AND IS TO BE USED ONLY FOR PRODUCING ITEMS ON ORDER FOR CONSUMAT SYSTEMS, INC. SUBJECT TO RETURN UPON DEMAND AND IS NOT TO BE PRINTED, PHOTOGRAPHED, COPIED, REPRODUCED, LOANED OR USED IN ANY WAY WITHOUT WRITTEN PERMISSION OF CONSUMAT SYSTEMS, INC.

DR	DATE
TWC	7-19-94
CHK	DATE
APP	DATE
APP	DATE
ARCHIVE	PROJ NO.

CONSUMAT SYSTEMS, INC.
RICHMOND, VA. U.S.A.

TITLE
STAIRS
ASSEMBLY

NEXT HIGHER ASSY

DO NOT SCALE

SCALE 3/4" = 1'

REFERENCE

DWG NO. D-043-0379

SHEET 1 OF 2

REV.

REV	REVISION	DATE	DR	CHK	APP	APP
A						
B						
C						
D						
E						
F						
G						
H						
I						

PARTS LIST

QTY	BM	PART NUMBER	DESCRIPTION	CUT	FROM
1	1	D-44A-0048 P01	C8 X 11.5 X 164	0.683	01004078
2	2	D-44A-0048 P02	C8 X 11.5 X 163 1/2	0.681	01004078
2	3	D-44A-0048 P03	C8 X 11.5 X 87	0.363	01004078
3	4	D-44A-0048 P04	L3 X 2 X 1/4 X 31 1/2	0.131	01003052
4	5	D-44A-0048 P05	W6 X 15.0 X 43	0.179	01004150
4	6	D-44A-0048 P06	3/4 X 10 FB X 10	0.042	01001971
4	7	D-44A-0048 P07	3/4 X 6 FB X 14	0.058	01001976
3	8	D-44A-0048 P08	3/4 DIA HRS RB X 18 1/2	1.54	01002013
2	9	D-44A-0048 P09	3/8 X 3 FB X 35 3/4	0.149	01001648
1	10	D-44A-0048 P10	1/4 X 4 FB X 162	0.672	01001464
1	11	D-44A-0048 P11	1/4 X 4 FB X 24	0.100	01001464
1	12	D-44A-0048 P12	1/4 X 4 FB X 11	0.046	01001464
6	13	D-44A-0048 P13	1 SCH 40 PIPE X 6	0.50	01005016
6	14	D-44A-0048 P14	1 1/4 SCH 40 PIPE X 41	3.42	01005020
1	15	D-44A-0048 P15	1 1/4 SCH 40 PIPE X 160	13.27	01005020
2	16	D-44A-0048 P16	1 1/4 SCH 40 PIPE X 79	6.55	01005020
2	17	D-44A-0048 P17	1 1/4 SCH 40 PIPE X 23	1.92	01005020
2	18	D-44A-0048 P18	1 1/4 SCH 40 PIPE X 9	0.75	01005020
4	19	16004000	SPEED-RAIL NO.3 ELL		
5	20	16004001	SPEED-RAIL NO.5 TEE		
1	21	16004002	SPEED-RAIL NO.7 CROSS		
1	22	16004003	SPEED-RAIL NO.9 SIDE-OUTLET TEE		
1	23	16004004	SPEED-RAIL NO.11 SIDE-OUTLET TEE		
1	24	D-44A-0048 P24	GRATING,3/16 X 1 BEAR.BARS,36 X 164	0.683	01080960
2	25	D-44A-0048 P25	L4 X 3 X 3/8 X 2 1/2	0.010	01003079

NOTES:

1. WELD ALL AROUND JOINTS OF FRAME MEMBERS, EXCEPT AS NOTED. COPE AS REQ'D. TOP SURFACE OF FRAME TO BE FLUSH.
2. DIAGONAL MEASUREMENT ACROSS CORNERS TO BE EQUAL WITHIN 1/4".
3. TACK GRATING TO FRAME AT ALL POINTS OF SUPPORT. GRATING TO BE NOTCHED AS REQUIRED TO CLEAR HANDRAIL POSTS, FOOTPLATES, ETC.

APPROX WT: 1600 LBS

THIS DRAWING IS THE PROPERTY OF CONSUMAT SYSTEMS, INC. AND IS TO BE USED ONLY FOR PRODUCING ITEMS ON ORDER FOR CONSUMAT SYSTEMS, INC. SUBJECT TO RETURN UPON DEMAND AND IS NOT TO BE PRINTED, PHOTOGRAPHED, LOANED, REPRODUCED, LOANED OR USED IN ANY WAY WITHOUT WRITTEN PERMISSION OF CONSUMAT SYSTEMS, INC.

DR BLJ DATE 5/13/94
CHK DATE
APP DATE
APP DATE
ARCHIVE PROJ NO. P5185
NEXT HIGHER ASSY D-022-0119
DO NOT SCALE

CONSUMAT SYSTEMS, INC.
RICHMOND, VA. U.S.A.

TITLE
PLATFORM ASSEMBLY
AC-48 SUMP TANK

SCALE 3/4" = 1'
REFERENCE
DWG. NO. D-44A-0048
SHEET OF
REV.

REV	REVISION	DATE	DR	CHK	APP	APP
A						
B						
C						
D						
E						
F						
G						
H						
I						

NOTES:

1. WELD ALL AROUND JOINTS OF FRAME MEMBERS, EXCEPT AS NOTED. TOP SURFACE OF FRAME AND BOTTOM SURFACE AT LEG MOUNTING AREA TO BE FLUSH.
2. FRAME TO BE SQUARE WITHIN 1/4" ACROSS DIAGONALS.
3. TACK GRATING TO FRAME AT ALL POINTS OF SUPPORT. GRATING TO BE NOTCHED AS REQUIRED TO CLEAR HANDRAIL POSTS.

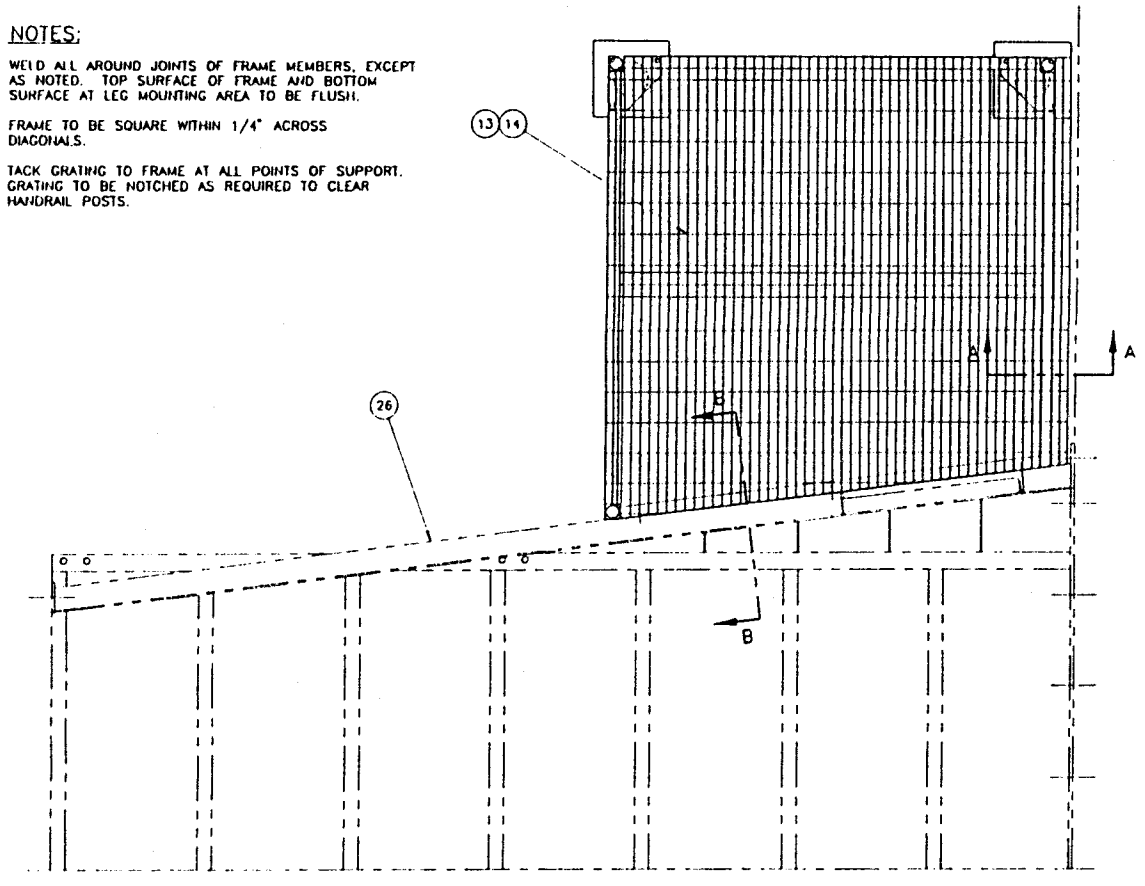

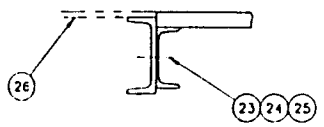

SECTION B-B
2" = 1'-0"

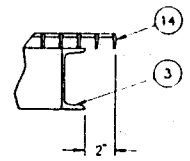

SECTION A-A
2" = 1'-0"

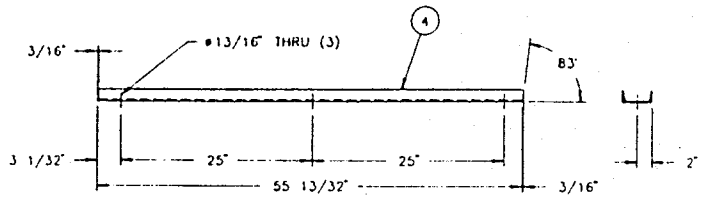

PARTS LIST

QTY	BM	PART NUMBER	DESCRIPTION	CUT FROM	
1	1	D-44D-0012 P01	C4 X 5.4 X 60	0.250	01004045
2	2	D-44D-0012 P02	C4 X 5.4 X 55	0.229	01004045
1	3	D-44D-0012 P03	C4 X 5.4 X 53 1/2 TRIM TO SIZE	0.223	01004045
1	4	D-44D-0012 P04	C4 X 5.4 X 55 3/4 TRIM TO SIZE	0.232	01004045
2	5	D-44D-0012 P05	4 SCH 40 PIPE X 173	14.42	01005064
2	6	D-44D-0012 P06	1/2 X 7 FB X 7	0.029	01001897
2	7	D-44D-0012 P07	1/2 X 10 FB X 10	0.042	01001910
1	8	D-44D-0012 P08	1/4 X 4 FB X 58	0.229	01001464
1	9	D-44D-0012 P09	1/4 X 4 FB X 57 13/16	0.241	01001464
3	10	D-44D-0012 P10	1 1/4 SCH 40 PIPE X 41	3.42	01005020
2	11	D-44D-0012 P11	1 1/4 SCH 40 PIPE X 56	4.67	01005020
2	12	D-44D-0012 P12	1 1/4 SCH 40 PIPE X 54 1/4	4.52	01005020
1	13	D-44D-0012 P13	GRATING,3/16 X 1 BEAR.BARS,36 X 60	0.250	01000960
1	14	D-44D-0012 P14	GRATING,3/16 X 1 BEAR.BARS,24 X 55 11/16	0.232	01000955
2	15	16004000	SPEED-RAIL NO.3 ELL		
2	16	16004001	SPEED-RAIL NO.5 TEE		
1	17	16004003	SPEED-RAIL NO.9 SIDE-OUTLET TEE		
1	18	16004004	SPEED-RAIL NO.11 SIDE-OUTLET TEE		
6	19	09001509	1/2-13 X 2 HEX HEAD BOLT		
6	20	09004315	1/2-13 HEX NUT		
6	21	09004963	1/2 BEVEL WASHER		
6	22	09005005	1/2 LOCK WASHER		
3	23	09001805	3/4-10 X 2 HEX HEAD BOLT		
3	24	09004317	3/4-10 HEX NUT		
3	25	09005008	3/4 LOCK WASHER		
REF	26	D-011-0072	LOADING BRIDGE		

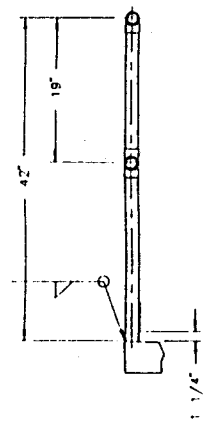

TYPICAL HANDRAIL SECTION

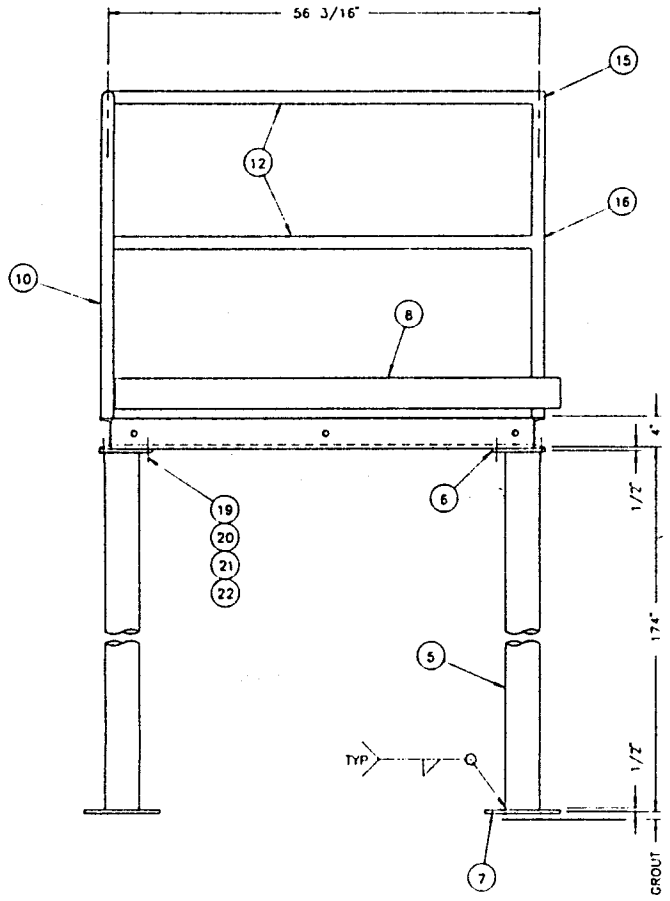

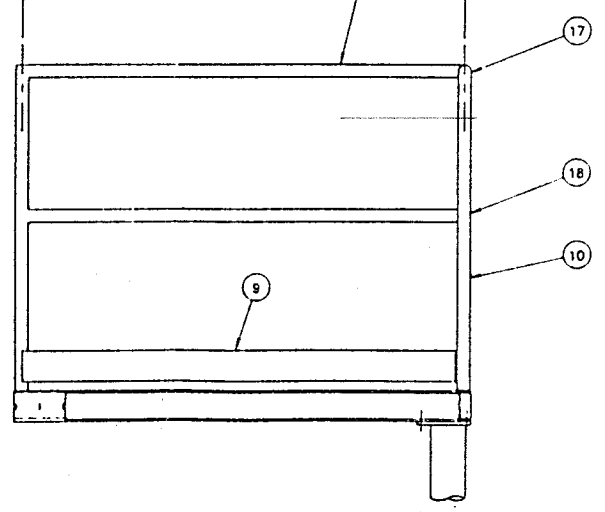

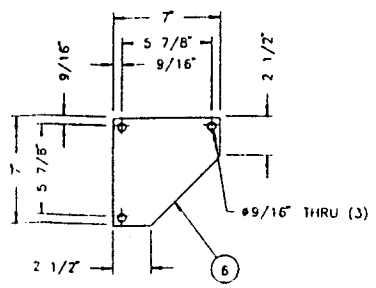

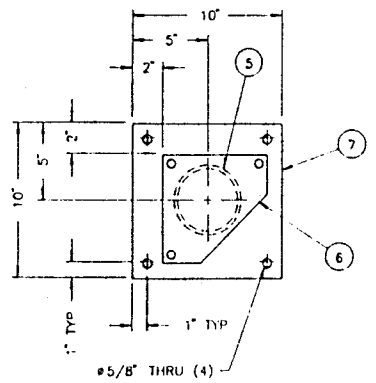

LEG TOP VIEW
2" = 1'-0"

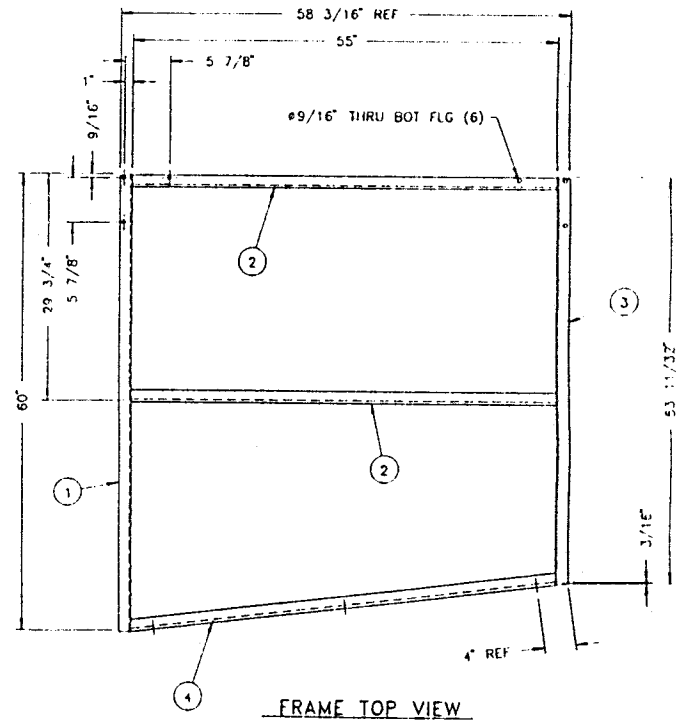

FRAME TOP VIEW

PLATFORM W.T.: 430 LBS
SUPPORT LEG W.T.: 175 LBS

THIS DRAWING IS THE PROPERTY OF CONSUMAT SYSTEMS, INC. AND IS TO BE USED ONLY FOR PRODUCING ITEMS ON ORDER FOR CONSUMAT SYSTEMS, INC. SUBJECT TO RETURN UPON DEMAND AND IS NOT TO BE PRINTED, PHOTOGRAPHED, COPIED, REPRODUCED, LOANED OR USED IN ANY WAY WITHOUT WRITTEN PERMISSION OF CONSUMAT SYSTEMS, INC.

DR BLJ	DATE 7/5/94	CONSUMAT SYSTEMS, INC. RICHMOND, VA. U.S.A.
CHK	DATE	
APP	DATE	TITLE: CONTROL PLATFORM ASSEMBLY
APP	DATE	
ARCHIVE	PROJ NO. P5185	
NEXT HIGHER ASSY	SCALE 1" = 1'	DWG NO. D-44D-0012
DO NOT SCALE	REFERENCE	SHEET OF

REV: | REVISION | DATE | DR | CHK | APP | APP |
C
B
A

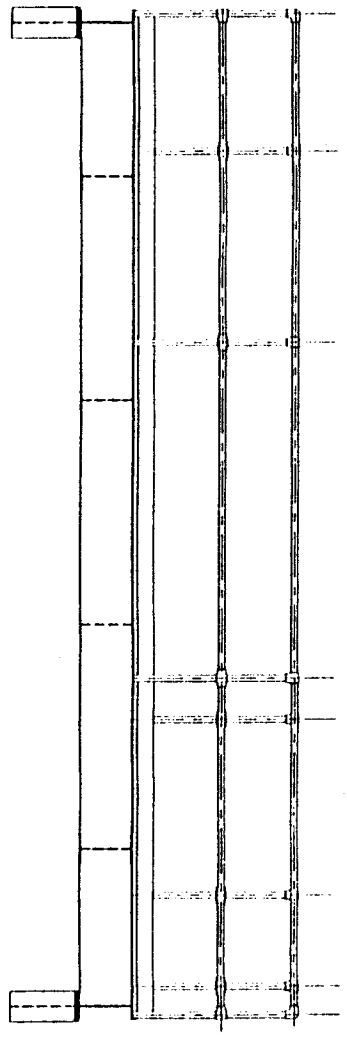

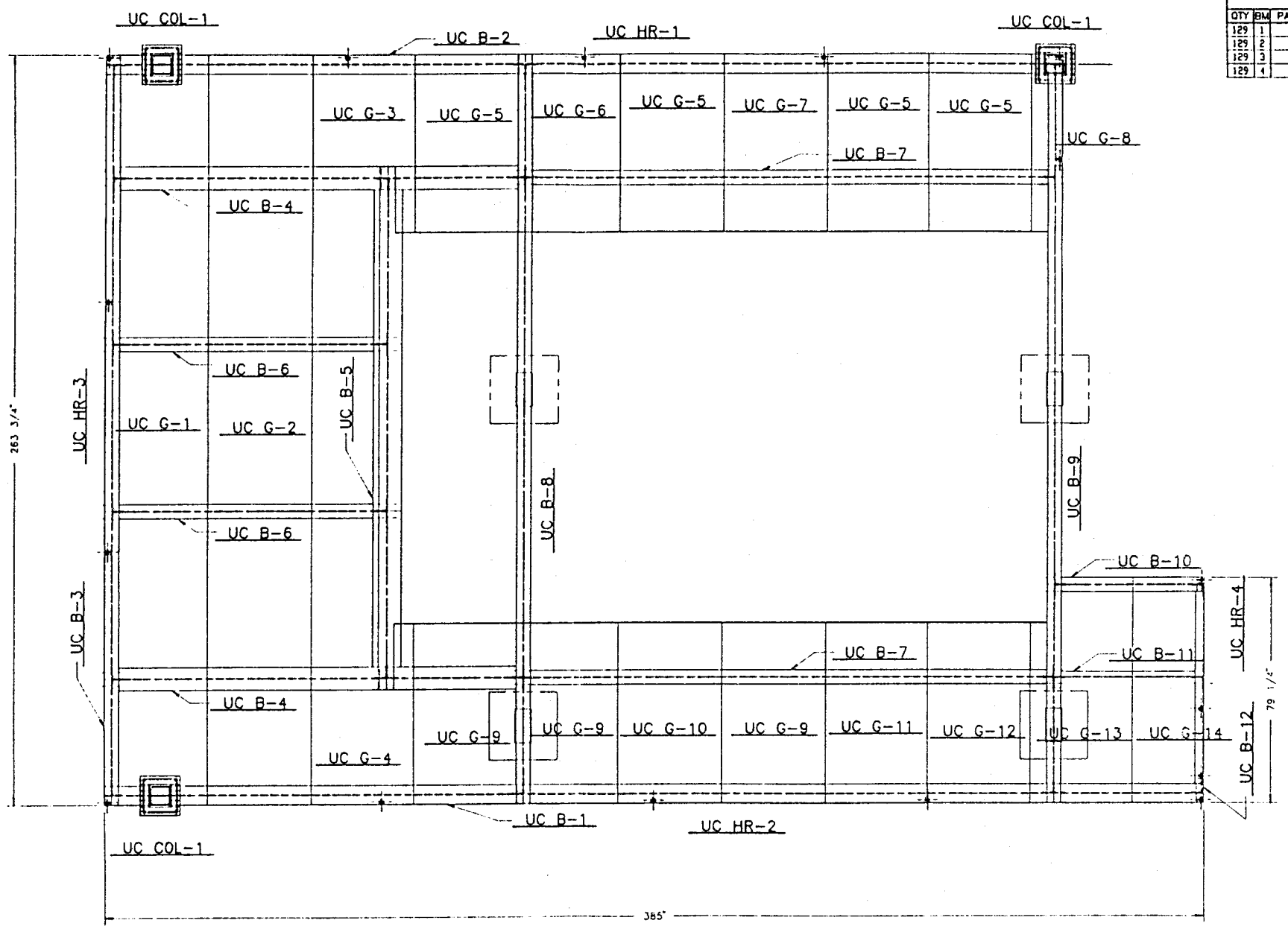

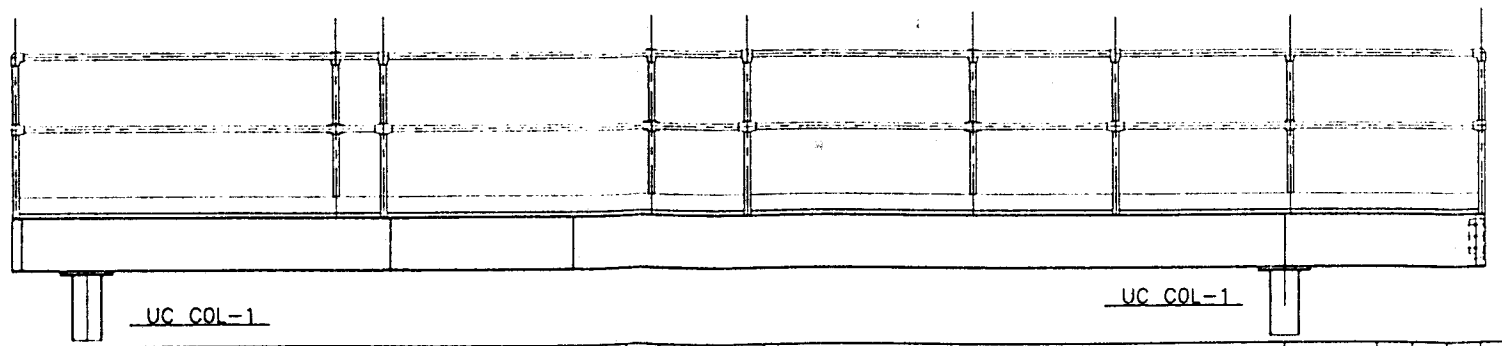

PARTS LIST				
QTY	BM	PART NUMBER	DESCRIPTION	CUT FROM
129	1	09001805	3/4-10 X 2 HEX HEAD BOLT	
129	2	09004317	3/4-10 HEX NUT	
129	3	09004909	3/4 FLAT WASHER	
129	4	09005008	3/4 LOCK WASHER	

FIELD ERECTION BOLTS

NOTES:

1. ALL STEEL TO BE FLUSH AT TOP.
2. ALL STEEL TO BE CLEARLY MARKED USING "BLEED THRU" PAINT OR WEATHERPROOF MARKING.
3. ALL STEEL TO BE PAINTED WITH ONE FINISH COAT OF GOOD GRADE MACHINERY GRADE PAINT.
4. ALL JOINTS ARE COPED TO FIT & WELDED UNLESS OTHERWISE NOTED.
5. ALL WELD SPLATTER TO BE REMOVED BEFORE PAINTING.

WEIGHT 16000#

REV	REVISION	DATE	DR	CHK	APP	APP
A	MOVED POST @ LADDER	7-25-94	TWC			

THIS DRAWING IS THE PROPERTY OF CONSUMAT SYSTEMS, INC AND IS TO BE USED ONLY FOR PRODUCING ITEMS ON ORDER FOR CONSUMAT SYSTEMS, INC SUBJECT TO RETURN UPON DEMAND AND IS NOT TO BE PRINTED, PHOTOGRAPHED, COPIED, REPRODUCED, LOANED OR USED IN ANY WAY WITHOUT WRITTEN PERMISSION OF CONSUMAT SYSTEMS INC

DR	TWC	DATE 8-29-94
CHK		DATE
APP		DATE
APP		DATE
ARCHIVE		PROJ NO. P-5185

CONSUMAT SYSTEMS, INC.
RICHMOND, VA. U.S.A.

TITLE
UPPER CHAMBER PLATFORM ASSEMBLY

NEXT HIGHER ASSY	SCALE	DWG NO.	REV.
DO NOT SCALE	1/2" = 1'	D-044-0384	A
	REFERENCE	SHEET 1 OF 4	

PARTS LIST					
QTY	BM	PART NUMBER	DESCRIPTION	CUT FROM	
• 1	1	D-44B-0060 P01	3/4 DIA CRS RB X 119 3/4	9.98	01002012
• 1	2	D-44B-0060 P02	3/4 DIA CRS RB X 152 1/2	12.71	01002012
• 1	3	D-44B-0060 P03	3/4 DIA CRS RB X 154	12.83	01002012
4	4	D-44B-0060 P04	1 SCH 40 PIPE X 5	0.42	01005016
2	5	D-44B-0060 P05	1 SCH 40 PIPE X 3	0.25	01005016
6	6	09004909	3/4 FLAT WASHER		
6	7	09004317	3/4-10 HEX NUT		

• THREAD BOTH ENDS 3/4-10 UNC.

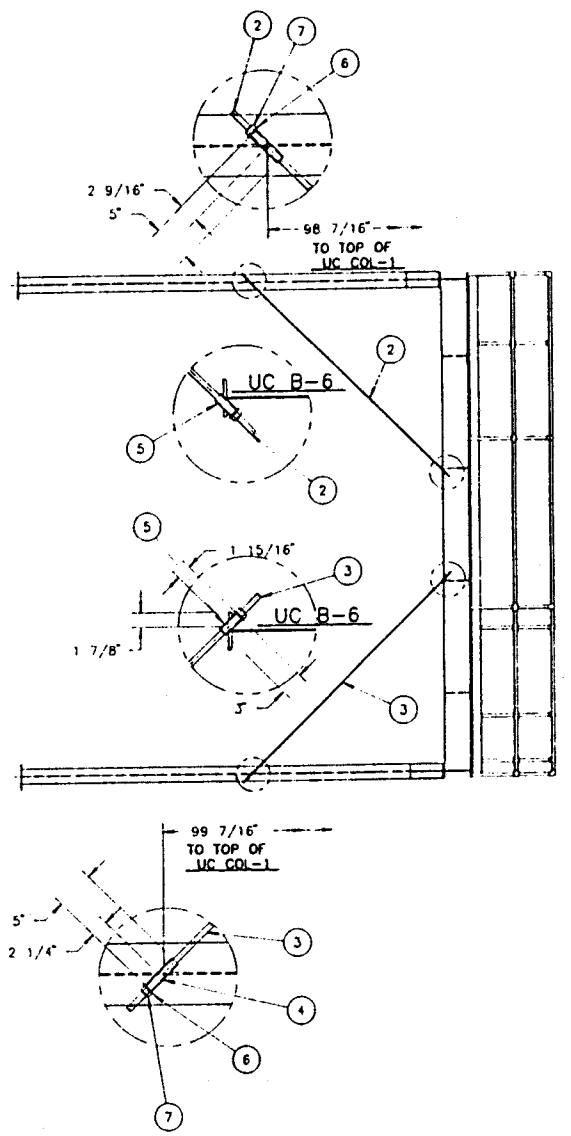

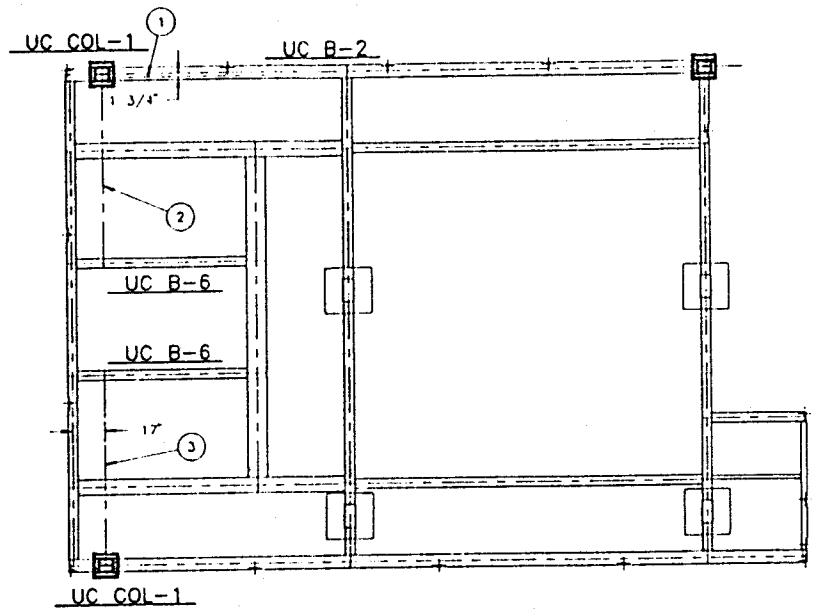

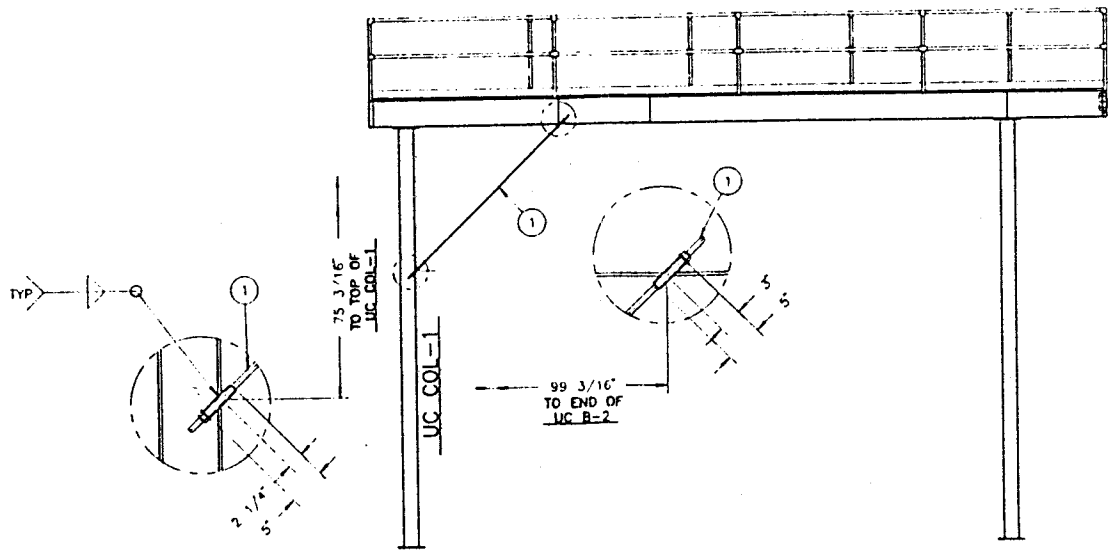

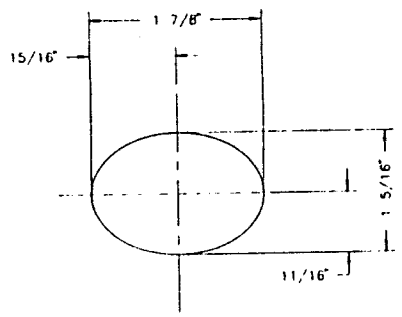

TYPICAL BURN PATTERN

WEIGHT 150#

THIS DRAWING IS THE PROPERTY OF CONSUMAT SYSTEMS, INC. AND IS TO BE USED ONLY FOR PURPOSES ON ORDER FOR CONSUMAT SYSTEMS, INC. SUBJECT TO RETURN UPON DEMAND AND IS NOT TO BE PRINTED, PHOTOGRAPHED, COPIED, REPRODUCED, LOANED OR USED IN ANY WAY WITHOUT WRITTEN PERMISSION OF CONSUMAT SYSTEMS, INC.

DR	TWC	DATE	8-18-94
CHK		DATE	
APP		DATE	
APP		DATE	
ARCHIVE		PROJ NO.	P-5185

CONSUMAT SYSTEMS, INC.
RICHMOND, VA. U.S.A.

TITLE
PLATFORM BRACING
UPPER CHAMBER
PLATFORM

NEXT HIGHER ASSY

DO NOT SCALE

SCALE 1/4" = 1'

REFERENCE

DWG. NO. D-44B-0060

REV.

SHEET 1 OF 1

REV	REVISION	DATE	DR	CHK	APP	APP
A						
B						
C						
D						
E						
F						
G						
H						
I						

NOTES:

1. ALL STEEL TO BE FLUSH AT TOP.
2. ALL JOINTS ARE COPED TO FIT AND WELDED ALL AROUND UNLESS OTHERWISE NOTED.
3. DIAGONAL MEASUREMENTS ACROSS CORNERS TO CONSTRUCTION POINTS TO BE EQUAL WITHIN 1/4".
4. ALL WELD SPATTER TO BE REMOVED PRIOR TO PAINTING..
5. ALL STEEL TO BE PAINTED WITH ONE FINISH COAT GOOD GRADE MACHINERY GRAY PAINT.

PARTS LIST					
QTY	BM	PART NUMBER	DESCRIPTION	CUT	FROM
REF	1		ACCESS PLATFORM ASSEMBLY WITH HANDRAIL		
REF	2		PLATFORM SUPPORT BEAM ASSEMBLY		
REF	3	D-47A-0005 P09	PLATFORM SUPPORT COLUMN		
REF	1	D-047-0026	QUENCH CHAMBER TOP SECTION		
REF	5		LADDER ASSEMBLY		
4	6	09001702	5/8-11 X 1 1/2 HEX HEAD BOLT		
4	7	09004316	5/8-11 HEX NUT		
4	8	09005007	5/8 LOCK WASHER		
4	9	09004907	5/8 FLAT WASHER		

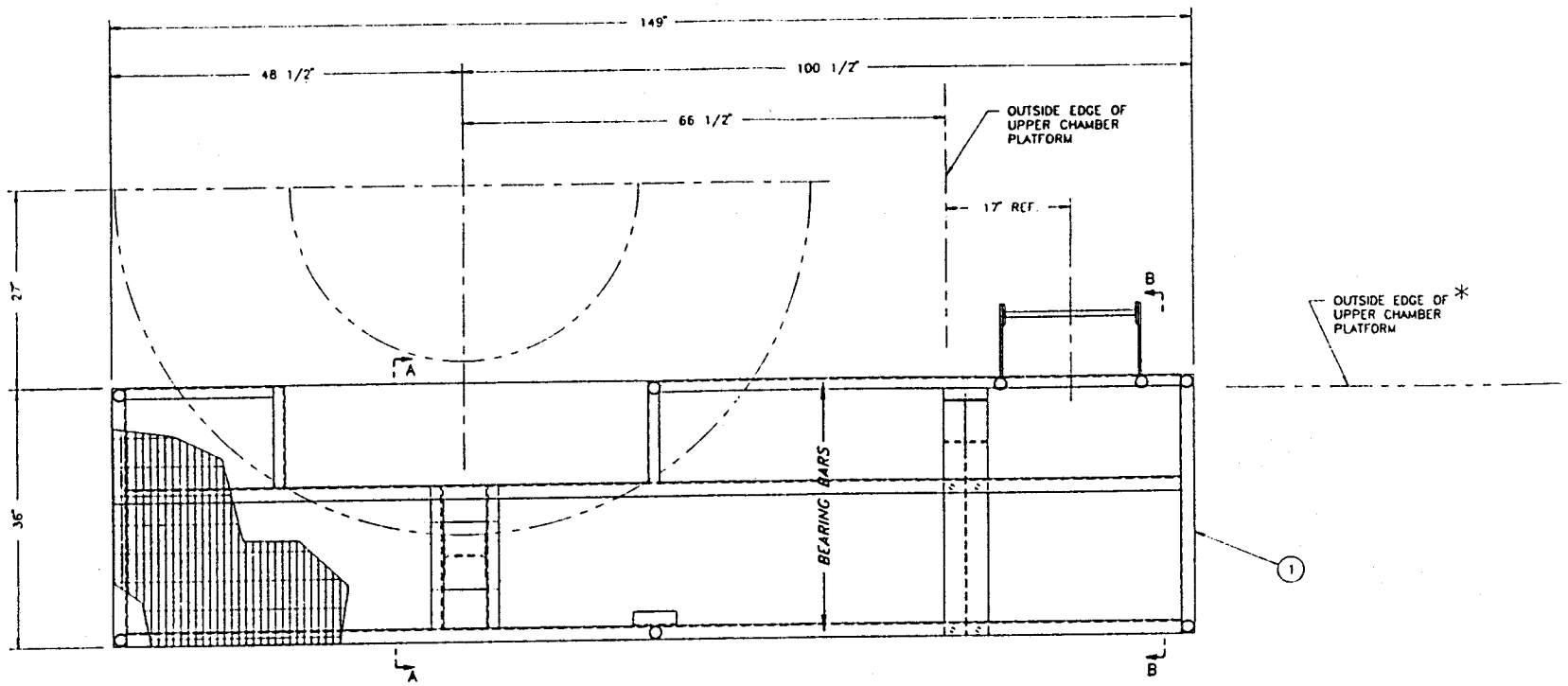

SEE D-47A-0005 SHT 2 OF 2
FOR MATERIAL PARTS LIST AND DETAILS

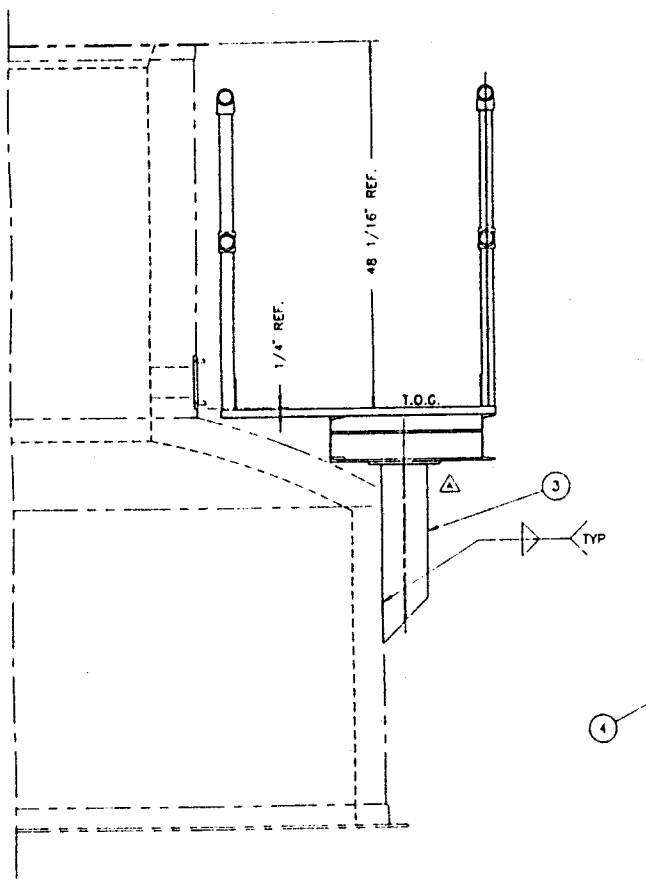

SECTION "A-A"

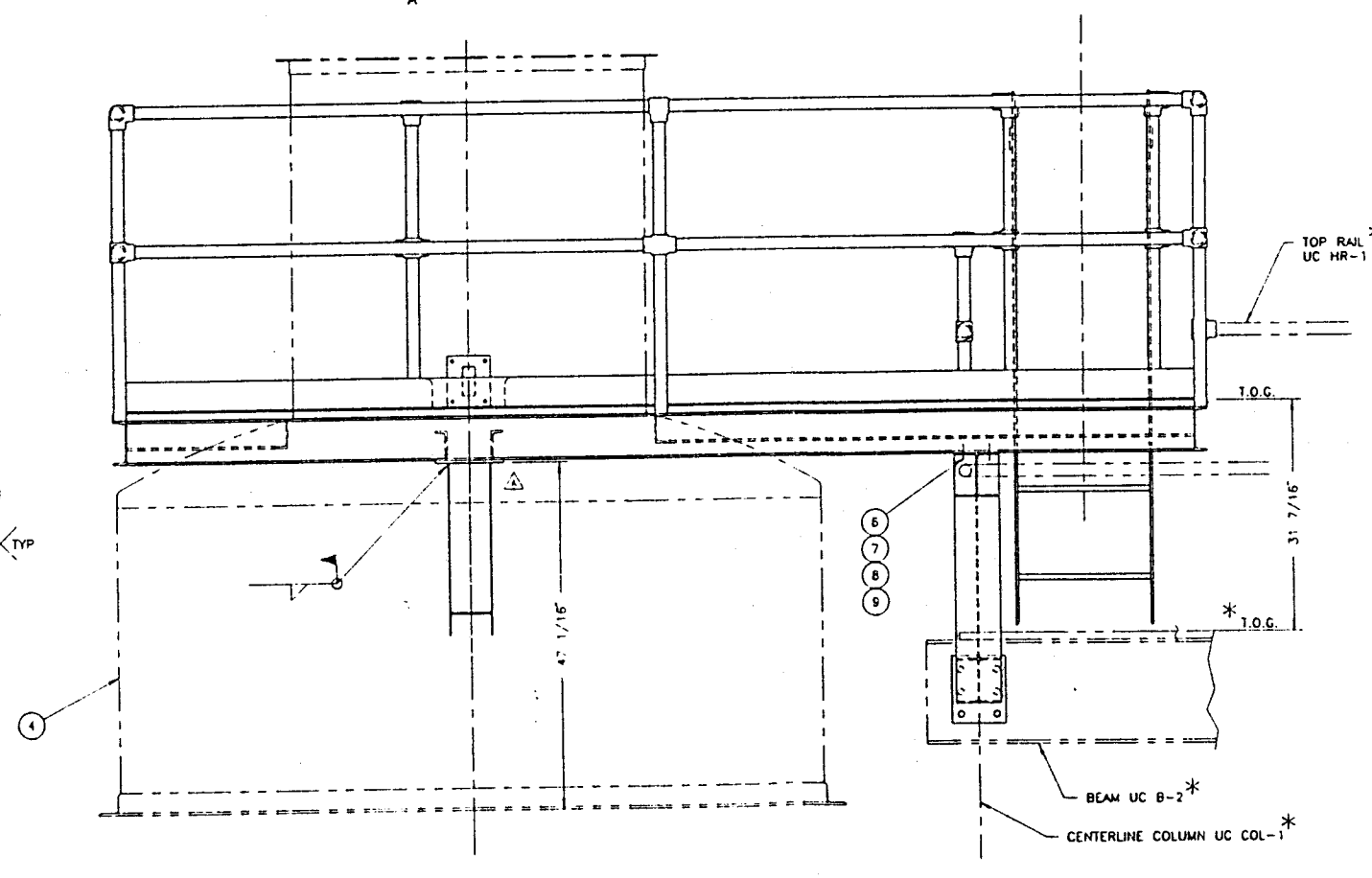

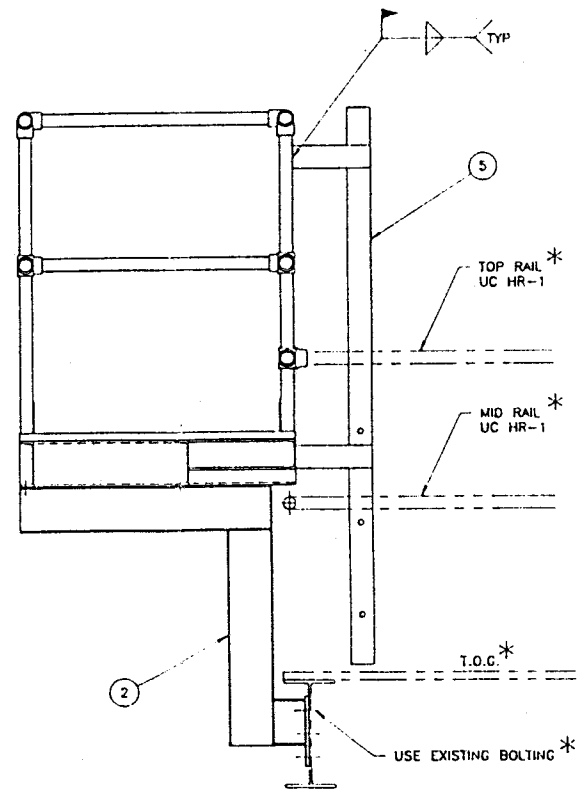

SECTION "B-B"

* REFER TO DRAWING D-044-0384

REV	REVISION	DATE	DR	CHK	APP	APP
A	REV QC PLAT SUPT	11-11-94	DEK			

THIS DRAWING IS THE PROPERTY OF CONSUMAT SYSTEMS, INC. AND IS TO BE USED ONLY FOR PRODUCING ITEMS ON ORDER FOR CONSUMAT SYSTEMS, INC. SUBJECT TO RETURN UPON DEMAND AND IS NOT TO BE PRINTED, PHOTOGRAPHED, COPIED, REPRODUCED, LOANED OR USED IN ANY WAY WITHOUT WRITTEN PERMISSION OF CONSUMAT SYSTEMS, INC.

DR DEK	DATE 7-27-94
CHK	DATE
APP	DATE
APP	DATE
ARCHIVE	PROJ NO. P5185
NEXT HIGHER ASSY	
DO NOT SCALE	

CONSUMAT SYSTEMS, INC.
RICHMOND, VA. U.S.A.

TITLE
ACCESS PLATFORM ASSEMBLY
96" QUENCH CHAMBER
BURROUGHS WELLCOME CO.

SCALE	DWG NO.	REV.
1" = 1'	D-47A-0005	A
REFERENCE	SHEET 1 OF 2	

ENVIRONMENTAL CONTROL PRODUCTS, INC.
Charlotte, North Carolina

SHT. 1 OF 1 | LAST REV.

DATE OF COPY

ALL INFORMATION CONTAINED HEREIN IS THE PROPERTY OF ENVIRONMENTAL CONTROL PRODUCTS, INC. AND MAY NOT BE DISCLOSED OR USED WITHOUT WRITTEN PERMISSION.

BILL OF MATERIAL

FOR DWG. NO. S-0433M

INSTALLATION
BURROUGHS WELLCOME CO.
81 -108

Exhibit #14

REV.	ITEM	PART NUMBER	PART NAME	DESCRIPTION	QTY.
	1	5606D	1000T INCINERATOR (SPEC.)	SEE DWG. & B.M.	1
	2	4952D-281	SR-28H RAM FEEDER	SEE DWG. & B.M.	1
	3	E5592D	ELECTRICAL SYSTEM	SEE DWG. & B.M.	1
	4	4539D	HYDRAULIC SYSTEM	SEE DWG. & B.M.	1
	5	0813C-3	STACK SECTION (STRAIGHT)	SEE DWG.& B.M.	6
	6	1416B-4	SPARK ARRESTOR	SEE DWG. & B.M.	1
	7	5613M	SUPPORT LEG HARDWARE KIT	SEE B.M.	1
	8	5614M	FRONT SUPPORT HARDWARE KIT	SEE B.M.	1
	9	5615M	FLAMEPORT HARDWARE KIT	SEE B.M.	1
	10	5281M	STACK HARDWARE KIT	SEE B.M.	7

ITEM DETAIL ON DRAWING
)-ITEM REQUIRES NO DETAIL

ESS INDICATED OTHERWISE,
E DRAWING FOR SCHEDULED
MENSIONS OR NOTES.

FORM BOM-72

ENVIRONMENTAL CONTROL PRODUCTS, INC.
Charlotte, North Carolina

SHT. 1 OF 1 | LAST REV. A

DATE OF COPY

ALL INFORMATION CONTAINED HEREIN IS THE PROPERTY OF ENVIRONMENTAL CONTROL PRODUCTS, INC. AND MAY NOT BE DISCLOSED OR USED WITHOUT WRITTEN PERMISSION.

BILL OF MATERIAL

FOR DWG. NO. 5606D

1000T INCINERATOR FINAL ASSEMBLY: SPECIAL FOR BURROUGHS WELLCOME CO.
JOB NO. 81-108

REV.	ITEM	PART NUMBER	PART NAME	DESCRIPTION	QTY.
	1	5607D	IGNITION CHAMBER ASS'Y.	SEE DWG & B/M	1
	2	5608D	COMBUSTION CHAMBER	——	—
	—	——	ASS'Y.	SEE DWG & B/M	1
	3	5609M	BURNER & FUEL SYSTEM	SEE B/M	1
	4	5610M	COMBUSTION AIR SYSTEM	SEE B/M	1
	5	5605B-1	UNDERFIRE AIR SYSTEM	SEE DWG & B/M	1
	6	4011D-1	HYDRAULIC CHARGING	——	—
	—	——	DOOR ASS'Y.	SEE DWG & B/M	1
	7	0973D-1	CLEANOUT DOOR	SEE DWG & B/M	1
	8	0829D-6	CLEANOUT DOOR HINGE	SEE DWG & B/M	1
	9	5612C	SUPPORT LEG	SEE DWG & B/M	2
	10	4055C-1	VIEWING PORT W/ GATE	SEE DWG & B/M	1
	11	5271B	VIEWING PORT ASS'Y	SEE DWG & B/M	1
	12	5039C-3	LIQUID WASTE COVER	HRS PL 1/4 x 7 1/2 x 7 1/2	1
	13	ND	HEX HD CAP SCREW	3/8-16 UNC x 1 3/4 LG.	4
	14	ND	HEX NUT	3/8-16 UNC	4
	15	ND	LOCK WASHER	3/8 NOM	4
	16	ND	FLAT WASHER	3/8 NOM	4
	17	4501B-2	PIPE CAP W/ HANDLE	SEE DWG & B/M	28

*-ITEM DETAIL ON DRAWING
ND-ITEM REQUIRES NO DETAIL

UNLESS INDICATED OTHERWISE, SEE DRAWING FOR SCHEDULED DIMENSIONS OR NOTES.

FORM BOM-7

ENVIRONMENTAL CONTROL PRODUCTS, INC.
Charlotte, North Carolina

SHT. 1 OF 1 | LAST REV. C

DATE OF COPY

ALL INFORMATION CONTAINED HEREIN IS THE PROPERTY OF ENVIRONMENTAL CONTROL PRODUCTS, INC. AND MAY NOT BE DISCLOSED OR USED WITHOUT WRITTEN PERMISSION.

BILL OF MATERIAL

FOR DWG. NO. 4952D-281

FINAL ASSEMBLY
SR-28H HYDRAULIC RAM FEEDER
ARRANGEMENT "B" OR "C"
18½ SILL HEIGHT

REV.	ITEM	PART NUMBER	PART NAME	DESCRIPTION	QTY.
	1	4951D-281	FEEDER FRAME ASSEMBLY	SEE DWG. & B.M.	1
	2	5476D	RAM ASSEMBLY	SEE DWG. & B.M.	1
	3	4950D-1	HATCH COVER ASSEMBLY	SEE DWG. & B.M.	1
	4	5471D	CARRIAGE ASSEMBLY	SEE DWG. & B.M.	1
	5	5472B	CYLINDER MOUNTING BRACKET	SEE DWG. & B.M.	1
	6	0838C	WATER SPRAY ASSEMBLY	SEE DWG. & B.M.	1
	7	3973A	HATCH COVER CYLINDER	2½"BORE, 1" ROD, 20"STROKE	2
	8	ND	PILLOW BLOCK	FAFNIR- RAO 1-7/16	2
	9	0686A	LEVELING PAD	3/8 x 3" HRS FLAT x 3" LG.	6
	10	ND	SQ. HD SET SCREW	5/8 - 11 UNC x 2½ LG	6
	11	ND	HEX HD CAP SCREW	½ - 13 UNC x 2" LG	4
	12	ND	HEX HD CAP SCREW	5/8 - 11 UNC x 1¼ LG	4
	13	ND	HEX NUT	5/8 - 11 UNC	4
	14	ND	LOCK WASHER	5/8 - NOM	4
	15	ND	GUARD EXPANDED METAL	½ - 13-15 FIAT x 32¼ x 21-1/8	4
	16	ND	U.V. SCANNER	SEE ELECTRICAL B.M.	1
	17	ND	LOCK WASHER	½ NOM	4

ITEM DETAIL ON DRAWING
ND-ITEM REQUIRES NO DETAIL

UNLESS INDICATED OTHERWISE,
SEE DRAWING FOR SCHEDULED
DIMENSIONS OR NOTES.

FORM BOM-72

NVIRONMENTAL CONTROL PRODUCTS, INC.
Charlotte, North Carolina

SHT. 1 OF 1 | LAST REV.

DATE OF COPY

L INFORMATION CONTAINED HEREIN IS THE PROPERTY OF ENVI-
NMENTAL CONTROL PRODUCTS, INC. AND MAY NOT BE DISCLOSED
R USED WITHOUT WRITTEN PERMISSION.

ECP INC

BILL OF MATERIAL

FOR DWG. NO. 4011D-1

SIDE LIFT HYDRAULIC CHARGING DOOR 41"x31"

REV.	ITEM	PART NUMBER	PART NAME	DESCRIPTION	QTY.
	1	4012D-1	41"x31" DOOR	SEE DWG AND B.M.	1
	2	4013C-1	CYLINDER MOUNT	" " " "	1
	3	4013C-2	CYLINDER MOUNT	" " " "	1
	4	4014B-1	DOOR LIFT BAR	1"x5½ C1018 CFS FLAT x 64¼ LG.	1
	5	3883A	HYDRAULIC CYLINDER	2" BORE x 1⅜ ROD x 33" STROKE	2
	6	4015D-1	HOOD	SEE DWG AND B.M.	1
	7	10-0705A-1	INSULATION	INSBLOK-19 1"x12"x36"	4 PCS
	8	4016B-1	HEAT SHIELD RETAINER	½-NO. 13 CARBON STEEL FLATTENED EXPANDED METAL x 20"x48"	2
*	9	ND	LIMIT SWITCH	MICROSWITCH #LSA3K-2BC	2
	10	4017A	MOUNTING PAD	⅝ x 2" HRS FLAT x 2" LG	6
	11	4018B	RAM CLAMP BAR	SEE DWG AND B.M.	2
	12	ND	LOCATING PAD	⅝ x 2" HRS FLAT x 2" LG.	2
	13	ND	SOCKET HD. CAP SCREW	5/16-18 x 1" LG.	16
	14	ND	LOCK WASHER	5/16 NOM.	37
	15	ND	HEX HD. CAP SCREW	5/16-18 x ½ LG.	9
	16	ND	HEX HD. CAP SCREW	5/16-18 x 1½ LG.	12
	17	ND	FLAT WASHER	5/16 NOM.	12
	18	ND	HEX NUT	5/16-18	12
	19	ND	RD HD. MACH. SCREW	#8-32 x 2¼ LG.	4
	20	ND	LOCK WASHER	#8 NOM.	4
	21	ND	FLAT WASHER	#8 NOM.	4
	22	ND	HEX. NUT	#8-32	4
	23	ND	HEX HD. CAP SCREW	½-13 x 1" LG	6
	24	ND	LOCK WASHER	½ NOM.	6

ITEM DETAIL ON DRAWING
ITEM REQUIRES NO DETAIL

* THIS ITEM ALSO APPEARS ON ELECTRICAL BILL OF MATERIAL

SS INDICATED OTHERWISE.
DRAWING FOR SCHEDULED
ENSIONS OR NOTES.

FORM BOM-12

ENVIRONMENTAL CONTROL PRODUCTS. INC.
Charlotte, North Carolina

TOLERANCE

SHT. 1 OF 2 | LAST REV. A

DATE OF COPY

L INFORMATION CONTAINED HEREIN IS THE PROPERTY OF ENVIRONMENTAL CONTROL PRODUCTS. INC. AND MAY NOT BE DISCLOSED OR USED WITHOUT WRITTEN PERMISSION.

BILL OF MATERIAL

FOR DWG. NO. 4539D

HYDRAULIC POWER SYSTEM

FOR INCINERATOR AND RAM FEEDER WITH DUAL CYLINDER HINGED HATCH

REV.	ITEM	PART NUMBER	PART NAME	DESCRIPTION	QTY.
	1	3767D-3	HYDRAULIC POWER UNIT	SEE DWG & B.M.	1
	2	NO	DIRECTIONAL VALVE	DOUBLE A QF-01-C-10F2	3
	3				
	4	NO	BALL VALVE	APOLLO NO. 76-101-01	2
	5	NO	PRESSURE SWITCH	DELTA # PS 2000	1
	6	NO	FLOW CONTROL	M&M MICRO-FLO KLF-375B	5
	7	NO	HOSE	LENZ # 8KR	25FT
	8	NO	SWIVEL HOSE FITTING	LENZ # 121-8	12
	9	NO	ADAPTOR	LENZ # 3100-8	1
	10	NO	90° ELBOW	LENZ # 3400-8	4
	11	NO	90° ELBOW	LENZ # 3400-8-4	2
	12	NO	UNION	LENZ # 3300-8	8
	13	NO	TEE	LENZ # 3600-8	2
	14	NO	TUBE CLAMP	STAUFF # LB-1/2	16
	15	NO	HYDRAULIC TUBING.	1/2 O.D. x 20 GA. SEAMLESS HYDRAULIC STEEL TUBING	80FT.
	16	NO	HEX BUSHING	1/2 NPT X 3/8 NPT STEEL	6
	17	NO	HEX BUSHING	3/8 NPT X 1/4 NPT STEEL	3
	18	NO	HEX BUSHING	3/4 NPT X 3/8 NPT STEEL	2
	19	NO	TEE	3/8 NPT 2000 #	3
	20	NO	NIPPLE, CLOSE	3/8 SCHED. 80 STEEL	2
	21	NO	NIPPLE, CLOSE	1/4 SCHED. 80 STEEL	2
	22	NO	NIPPLE	3/8 SCHED. 80 STL. X 4" LG	6
	23	NO	SOCKET HD. CAP SCREW	1/4-20 x 1 3/4 LG	12
	24	NO	HEX HD CAP SCREW	1/4-20 x 1 1/4 LG	16
	25	NO	LOCK WASHER	1/4 NOM.	28

ITEM DETAIL ON DRAWING
-ITEM REQUIRES NO DETAIL

LESS INDICATED OTHERWISE.
E DRAWING FOR SCHEDULED
MENSIONS OR NOTES.

NVIRONMENTAL CONTROL PRODUCTS, INC.
Charlotte, North Carolina

OLERANCE

SHT. 2 OF 2 | LAST REV. A

KT
SY.

DATE OF COPY

LL INFORMATION CONTAINED HEREIN IS THE PROPERTY OF ENVI-
ONMENTAL CONTROL PRODUCTS, INC. AND MAY NOT BE DISCLOSED
D USED WITHOUT WRITTEN PERMISSION.

ECP INC

BILL OF MATERIAL

FOR DWG. NO. 4539D

HYDRAULIC POWER SYSTEM

FOR INCINERATOR AND RAM FEEDER WITH DUAL CYLINDER HINGED HATCH

EV.	ITEM	PART NUMBER	PART NAME	DESCRIPTION	QTY.
	26	NO	HYDRAULIC FLUID	E.F. HOUSHTON HOUGHTO-SAFE 520	25 GAL.
	27	NO	TEE UNION	LENZ 3700-8	4

ITEM DETAIL ON DRAWING
ITEM REQUIRES NO DETAIL

LESS INDICATED OTHERWISE,
E DRAWING FOR SCHEDULED

ENVIRONMENTAL CONTROL PRODUCTS, INC.
Charlotte, North Carolina

SHT. 1 OF 2 | LAST REV. E

NEXT ASSY. | DATE OF COPY

ALL INFORMATION CONTAINED HEREIN IS THE PROPERTY OF ENVIRONMENTAL CONTROL PRODUCTS, INC. AND MAY NOT BE DISCLOSED OR USED WITHOUT WRITTEN PERMISSION.

BILL OF MATERIAL

FOR DWG. NO. 3767D-3

HYDRAULIC POWER UNIT
7 GPM, 750 PSI, 20 GAL RES.
3 VALVE STATION (NFPA D02)

REV.	ITEM	PART NUMBER	PART NAME	DESCRIPTION	QTY.
	1	3768D	RESERVOIR	SEE DWG. & B. M.	1
E	2	3769D	TOP PLATE	SEE DWG. & B. M.	1
	3	3770A	GASKET	SEPCO 200, 1/8 x 7/8 x 30"	2
	4	3771A	GASKET	SEPCO 200, 1/8 x 7/8 x 16¼	2
E	5	ND	GEAR PUMP	VICKERS V10-1P5P -1A20	1
	6	ND	BELL ADAPTOR	HESCO #25-47-2A	1
	7	ND	COUPLING	LOVEJOY #AL-100, 3/4 BORE,	
				3/16 KEY, 1-1/8 BORE, ¼ KEY	1
	8	ND	MOTOR	5 HP, 1725 RPM, 184T FRAME	
				"C" FACE TEFC	1
	9	ND	INLET STRAINER	LENZ #49-20-R-3	1
	10	ND	RELIEF VALVE	SUN - RPGCJBV	1
	11	ND	MANIFOLD	PHD #DPP-03 4 02-RC	1
	12	3772A	GASKET	SEPCO 200, 1/8 x 3¼ x3-3/4	1
*	13	ND	RETURN LINE FILTER	LENZ #CP-500-10P	1
	14	ND	FLUID LEVEL GAUGE	LENZ #550-3	1
	15	ND	FILLER CAP/BREATHER	LENZ #FCS-537W	1
	16	ND	PRESSURE GAUGE	0-2000 PSI, ¼NPT BOTTOM MOUNT	1
	17	ND	HEX HD CAP SCREW	3/8 - 16 x 1½ LG	2
	18	ND	LOCK WASHER	3/8 NOM	6
	19	ND	HEX HD CAP SCREW	½ - 13 x 1½ LG	4
	20	ND	LOCK WASHER	½ NOM	4
E	21	ND	HEX HD CAP SCREW	¼ - 20 x 3/4 LG	20
E	22	ND	LOCK WASHER	¼ NOM	20
	23	ND	HEX NUT	¼ - 20	14

-ITEM DETAIL ON DRAWING
D-ITEM REQUIRES NO DETAIL

* FILTER ONLY LENZ #CP-752-10

UNLESS INDICATED OTHERWISE, SEE DRAWING FOR SCHEDULED DIMENSIONS OR NOTES.

ENVIRONMENTAL CONTROL PRODUCTS, INC.
Charlotte, North Carolina

SHT. 2 OF 2 | LAST REV. E

DATE OF COPY

XT
SSY.

LL INFORMATION CONTAINED HEREIN IS THE PROPERTY OF ENVIRONMENTAL CONTROL PRODUCTS, INC. AND MAY NOT BE DISCLOSED OR USED WITHOUT WRITTEN PERMISSION.

BILL OF MATERIAL

FOR DWG. NO. 3767D-3

HYDRAULIC POWER UNIT
7 GPM, 750 PSI, 20 GAL RES.
3 VALVE STATION (NFPA D02)

REV.	ITEM	PART NUMBER	PART NAME	DESCRIPTION	QTY.
	24	ND	HEX HD CAP SCREW	3/8 - 16 x 1" LG	4
	25	3773A	GASKET	SEPCO 200,1/8 x 9" DIA	1
E	26	5463C	COVER PLATE & GASKET	SEE DWG. & B.M.	1
	27				
	28	ND	STEEL PIPE NIPPLE	½ SCHD. 40 CLOSE	2
	29	ND	STEEL PIPE NIPPLE	½ SCHD. 40 x 4" LG	2
	30	3774A	RETURN PIPE	½ SCHD. 40 STEEL x 12" LG	1
	31	ND	90° STREET ELBOW	½ NPT MALLEABLE IRON	2
	32	ND	UNION	½ NPT MALLEABLE IRON	2
	33	ND	INLET PIPE	1" SCHD. 40 x 3" LG	1
E	34	ND	90° STREET ELBOW	1" NPT MALLEABLE IRON	2
E	35	ND	HEX BUSHING	1¼ NPT x 1" NPT MALL.IRON	1
	36	ND	HEX BUSHING	3/4 NPT x¼ NPT 2000 LB STL	1
	37	ND	SQ HD PIPE PLUG	½ NPT	1
	38	ND	SEAMLESS STL HYD TUBING	½ OD x 20 GA WALL x 26"LG	1
	39	ND	SEAMLESS STL HYD TUBING	½ OD x 20 GA WALL x 24"LG	1
	40				
	41	ND	MANIFOLD BLOCK-OFF PLATE	PHD #CP-02-4	0
E	42				
E	43	ND	MALE CONNECTOR	LENZ # 3100-8-8	1
	44				
	45				
	46	ND	ADAPTOR	LENZ #3100-8-8	1
	47	ND	ADAPTOR	LENZ #3100-8-12	2

-ITEM DETAIL ON DRAWING
D-ITEM REQUIRES NO DETAIL

ILESS INDICATED OTHERWISE,
E DRAWING FOR SCHEDULED
MENSIONS OR NOTES.

ENVIRONMENTAL CONTROL PRODUCTS, INC.
Charlotte, North Carolina

SHT. 1 OF 5 | LAST REV.

DATE OF COPY

ALL INFORMATION CONTAINED HEREIN IS THE PROPERTY OF ENVIRONMENTAL CONTROL PRODUCTS, INC. AND MAY NOT BE DISCLOSED OR USED WITHOUT WRITTEN PERMISSION.

BILL OF MATERIAL

FOR DWG. NO. E5592D

ELECTRICAL T-SERIES
DUAL FUEL (I.R.I.)
SR28H, MANUAL OVERRIDE
MODULATED AIR 460V 3Ø 60HZ

REV.	ITEM	PART NUMBER	PART NAME	DESCRIPTION	QTY.
			ENCLOSURES		
			MAIN CONTROL, MOTOR CONTROL	McKINSTRY 55-483612LP	2
			RAM	" " 55-36308LP	1
			PANEL	" " 42-4836	2
			PANEL	" " 42-3630	1
			STARTERS		
			1M, 3M, 4M, 6M	SYLVANIA T13V030-76	4
			2M, 5M,	" " T13V031-76	2
			FUSE HOLDERS		
			1M, 2M, 3M, 4M, 5M, 6M	ALLEN BRADLEY 1491N126	6
			115V CONTROL	BUSS 3743	1
			END PLATE	BUSS 3742	1
			FUSES		
			1M	BUSS FRS 5 AMP	3
			2M, 5M	BUSS FRS 20 AMP	6
			3M, 4M	BUSS FRS 10 AMP	6
			6M	BUSS FRS 15 AMP	3
			HEATERS		
			1M	SYLVANIA 2419	3
			2M	" " 2445	3
			3M	" " 2425	3

ITEM DETAIL ON DRAWING
ID-ITEM REQUIRES NO DETAIL

LESS INDICATED OTHERWISE,
E DRAWING FOR SCHEDULED
IMENSIONS OR NOTES.

FORM BOM-72

ENVIRONMENTAL CONTROL PRODUCTS, INC.
Charlotte, North Carolina

SHT. 2 OF 5 | LAST REV.

DATE OF COPY

ALL INFORMATION CONTAINED HEREIN IS THE PROPERTY OF ENVIRONMENTAL CONTROL PRODUCTS, INC. AND MAY NOT BE DISCLOSED OR USED WITHOUT WRITTEN PERMISSION.

BILL OF MATERIAL

FOR DWG. NO. E5592D

ELECTRICAL

REV.	ITEM	PART NUMBER	PART NAME	DESCRIPTION	QTY.
			HEATERS		
			4M, 5M	SYLVANIA 2432	6
			6M	"" "" 2439	3
			CIRCUIT BREAKER		
			MAIN CIRCUIT BREAKER	ITE EE3B050	1
			HANDLE MECH.	KIT D11CE2	1
			TRANDFORMER		
			460V to 120V 1KVA	GEN. ELECT. 9T58B2812	1
			COVER MOUNTED 24V	HONEYWELL 130810A	3
			CONTROL RELAYS		
			600VAC 120V COIL 60HZ	SYLVANIA P6-40	20
			" " " " "	" " P6-80	4
			CONTROL FUSES		
			120V-	BUSS FNM 10A	1
			CONTROL TIMERS		
			PRE-PURGE, RAM FWD	EAGLE SIGNAL BR16A6	2
			SHUTDOWN	E.S. BR112A6	1
			program	e.s. br110A6	1
			FLAMEPORT AIR	E.S. BR118A6	1

ITEM DETAIL ON DRAWING
ND-ITEM REQUIRES NO DETAIL

NLESS INDICATED OTHERWISE.
EE DRAWING FOR SCHEDULED
IMENSIONS OR NOTES.

FORM BOM-7

ENVIRONMENTAL CONTROL PRODUCTS, INC.
Charlotte, North Carolina

SHT. 3 OF 5 | LAST REV.

DATE OF COPY

ALL INFORMATION CONTAINED HEREIN IS THE PROPERTY OF ENVIRONMENTAL CONTROL PRODUCTS, INC. AND MAY NOT BE DISCLOSED OR USED WITHOUT WRITTEN PERMISSION.

BILL OF MATERIAL

FOR DWG. NO. E5592D

ELECTRICAL

REV.	ITEM	PART NUMBER	PART NAME	DESCRIPTION	QTY.
			DELAY TIMERS		
			SOLID STATE	ARTISAN USA 403	10
			PRESSURE SWITCH		
			HYDRAULIC	DELTA PS 2000	1
			TEMPERATURE CONTROLS		
			UPPER, LOWER CHAMBER, HIGH LIMIT	A.P.I.LFE 303X 0-3000°F	3
			MODULATION CONTROLLER	PARTLOW BF76 2000-501-2000	3
			THERMOCOUPLE	HONEYWELL G615R12-1	3
			BURNER CONTROLS		
			COMBUSTION PROGRAMMERS	HONEYWELL 4795D1002	2
			PRE-PURGE CARD	H.W. ST71A1042	2
			AMPLYFIER U.V.	H.W. R7290A1001	2
			U.V. DETECTOR	H.W. C7035A1023	3
			LOW AIR PRESSURE	H.W. C645A1022	2
			LOW OIL PRESSURE	H.W. L404Y1027	1
			BASE	H.W. Q270A1024	3
			FLAME DETECTOR RAM	H.W. R7023C1001	1
			LIMIT SWITCHES		
			ARM ACTUATED	MICRO LSA3K	6
			ARM	MICRO LSZ52B	6

ITEM DETAIL ON DRAWING
NO-ITEM REQUIRES NO DETAIL

UNLESS INDICATED OTHERWISE,
SEE DRAWING FOR SCHEDULED
DIMENSIONS OR NOTES.

FORM BOM-71

ENVIRONMENTAL CONTROL PRODUCTS, INC.
Charlotte, North Carolina

SHT. 4 OF 5 | LAST REV.

DATE OF COPY

XT ASSY.

ALL INFORMATION CONTAINED HEREIN IS THE PROPERTY OF ENVIRONMENTAL CONTROL PRODUCTS, INC. AND MAY NOT BE DISCLOSED OR USED WITHOUT WRITTEN PERMISSION.

ECP INC

BILL OF MATERIAL

FOR DWG. NO. E5592D

ELECTRICAL

REV.	ITEM	PART NUMBER	PART NAME	DESCRIPTION	QTY.
			MOTORIZED VALVES		
			1MV, 2MV, 3MV,	~~H.W. M744A1014~~ M7445-1005	3
			RESISTOR KIT	H.W. 24400102-001	3
			INDICATOR LIGHTS & ALARMS		
			LAMP HOUSING	GEN. ELECT. CR103401	10
			LAMP	GEN ELECT. G56	10
			LENSE (RED)	DIALCO 103-1331-403	4
			" " (GREEN)	" " " "	2
			" " (AMBER)	" " " "	1
			" (BLUE)	" " " "	1
			" (WHITE)	" " " "	2
			ALARM HORN	EDWARDS 876-N5	1
			Switches & Pushbuttons		
			2 POS. MAINT. CONTACT.KEY	SW. MCRO PTKBS2221B8	3
			MOM. CONTACT PUSHBUTTON	SYLVANIA 100T-PB46-11X	4
			" " "	" " 100T-PB46-20X	1
			" " "	" " 100T-PB4B-11X	1
			" " "	" " 100T-PB4R-11X	4
			WIREWAY	PANDUIT 2x2LG6	6'
			COVER	" " 2LG6	6'

- ITEM DETAIL ON DRAWING
ND-ITEM REQUIRES NO DETAIL

UNLESS INDICATED OTHERWISE, SEE DRAWING FOR SCHEDULED DIMENSIONS OR NOTES.

FORM BOM-

Environmental Control Products, Inc.
Post Office Box 240707 / Charlotte, North Carolina 28224 / Telephone Area 704-588-1620
Tlx 572-549

September 27, 1983
WNW: 83/118

Burroughs Wellcome
3030 Cornwallis Road
Research Triangle Park, NC 27709

Attention: Mr. Ken Carpunky

Re: Field Service Trip
Sept. 21 & 22, P.O. E23082

Dear Ken:

Enclosed please find a copy of our Mr. Wiese's field service report on his visit to your incinerator.

Also enclosed is literature as requested on the North American burner components.

If we can be of further assistance please feel free to contact us.

Sincerely yours,

W.N. Weaver
Vice President Manufacturing
Field Service Director

WNW:dd

Enc.

cc: Service File

FIELD SERVICE CALL TO BURROUGHS WELLCOME
SEPT. 21 & 22, 1983

This call was made at the request of Ken Carpunky of Burroughs Wellcome to correct a problem of repeated flame failures of both the combustion and ignition burners.

I arrived at Burroughs Wellcome at 3:00 PM on September 21, 1983. Mr. Carpunky stated that the burner operation had always been erratic and this was a particularly bad problem with them since they must record temperatures all the time to assure that minimum temperatures are maintained at all times while they are burning their hazardous waste.

Both burner pilot assemblies have been changed per the instruction of ECP and Virgil Davis. The pilot gas solenoids have been moved so that they are downstream of the regulators. An additional pressure regulator has been added upstream of the zero regulators. Virgil Davis had recommended the pressure regulators since the zero regulators have a maximum inlet rating of 8 osi. These pressure regulators had not been adjusted and the pressure at the inlet of the zero regulators was in excess of 8 osi. This pressure was adjusted to 8 in. H_2O and the pilots were readjusted. The cooling air to the U.V. tubes was excessive and thh copper tube supplying the air was pinched off to reduce this air flow.

After adjusting the pilots they seemed to be much more stable. After cycling the burners numerous times the unit was left on all night. Left the jobsite at 7:30 PM.

Thursday, Sept. 22, 1983

Arrived at 8:00 AM. Found that the bottom burner had misfired one time during the night and that was the only failure. Adjusted the pots on all modulating controllers. Burroughs Wellcome could use their modulating upper burner to good advantage and possibly save some fuel. An air pressure switch of lower range would allow the burner to be modulated to lower output and thus give better control.

After watching the operation for some time its obvious that the orifice in the main pressure regulator is too small. The data plate on this regulator indicates a 3/4" orifice. A 1" and 1-3/16" orifice are available for that regulator. An inlet pressure at the regulator under <u>flow conditions</u> should be determined and the proper orifice selected from the flow charts.

The zero regulator on the upper burner is mounted stem down and the one on the lower burner was stem up. I told Ken Carpunky that I was unsure on that regulator which was correct. In checking it out the upper burner is correct. The bottom burner zero (Maxitrol) regulator should be inverted and the pilot readjusted.

All other systems on the unit seemed to be functioning well. Left the jobsite at about 12:00 Noon.

Jerry Wiese

cc: Mr. Ken Carpunky

Regulator Sizing Data

Table 6. Capacity Data—Types S201, S201N, S202, S203 in SCFH of 0.6 Specific Gravity Gas

OUTLET PRESSURE SETTING, RANGE, SPRING PART NO., AND DROOP	MAXIMUM INLET PRESSURE, PSIG	1-1/2" BODY SIZE						2" BODY SIZE					
		Seat Ring Size, Inches						Seat Ring Size, Inches					
		1/4	3/8	1/2	3/4	1	1-3/16	1/4	3/8	1/2	3/4	1	1-3/16
Setting 4" w.c. Range 2" - 4-1/2" w.c. Spring Part No. 1D8925 000A2 (Brown) Setting 6" w.c. Range 3-1/2" - 6-1/2" w.c. Spring Part No. 1D8926 000A2 (Red) Droop 1" w.c.	10" w.c. 1/2 1	400	800	1200	1000 1400 2100	1400 1600 2500	1600 1800 2700	400	900	1300	1200 1700 2800	1600 2200 3200	1800 2400 3800
	1-1/2	500	1050	1600	2500	3000	3200	500	1100	1700	3600	4300	5000
	2	600	1300	2100	2800	3500	3800	600	1400	2200	4500	5500	6400
	5	950	2200	3300	4500	5300	6000	1000	2300	3700	7800	9500	10000
	13	1600	3600	6200	7000	7750	7750	1650	3700	6500	10000	10000	10000
	25	2300	5000	7750	7750	7750		2400	5200	9200	10000	10000	
	60	4400	7750	7750	7750			4450	9000	10000	10000		
	100	6800	7750	7750				7000	10000	10000			
	125	6800	7750					7000	10000				
Setting 7" w.c. Range 5" - 9" w.c. Spring Part No. 1D8927 000A2 (Black) Droop 1" w.c.	10" w.c. 1/2 1	400	800	1100	900 1200 1900	1300 1550 2300	1450 1750 2500	400	800	1200	950 1500 2300	1400 1800 2800	1600 2000 3300
	1-1/2	500	1050	1500	2300	2800	3100	500	1050	1600	3100	3600	4500
	2	600	1300	1900	2600	3300	3600	600	1300	2000	4000	4500	6000
	5	950	2100	3200	4000	5100	5600	1000	2100	3500	7700	9200	10000
	13	1600	3500	6100	6600	7750	7750	1650	3500	6400	10000	10000	10000
	25	2200	5000	7750	7750	7750		2400	5200	9100	10000	10000	
	60	4300	7750	7750	7750			4450	9000	10000	10000		
	100	6800	7750	7750				7000	10000	10000			
	125	6800	7750					7000	10000				
Setting 11" w.c. Range 8-1/2" - 18" w.c. Spring Part No. 1D8932 000A2 (Gray) Droop 2" w.c.	1/2 1 1-1/2 2	400 500 600	700 950 1200	1100 1450 1760	800 1800 2300 2700	1500 2200 2800 3200	1700 2450 2900 3300	400 500 600	750 1000 1200	1100 1450 1700	800 1800 2500 3100	1500 2500 3400 4200	1700 2900 4000 5000
	5	950	2000	2900	3900	5100	5600	1000	2000	3000	7300	8000	9500
	13	1600	3400	5200	6500	7750	7750	1600	3400	6200	10000	10000	10000
	25	2100	4700	7750	7750	7750		2400	4800	8900	10000	10000	
	60	4400	7750	7750	7750			4450	8900	10000	10000		
	100	7000	7750	7750				7000	10000	10000			
	125	7000	7750					7000	10000				
Setting 20" w.c. Range 14" - 30" w.c. Spring Part No. 1D8933 000A2 (Dark Green) Droop 3" w.c.	1	300	500	750	1000	1300	1700	300	500	750	1000	1300	1700
	2	500	950	1400	2000	2800	3100	500	950	1400	2000	3000	3500
	5	900	1700	2500	4200	5000	5500	900	1700	2500	5300	5600	6500
	13	1500	3200	5400	6500	7750	7750	1500	3200	5500	9500	10000	10000
	25	2100	4700	7750	7750	7750		2300	4800	9000	10000	10000	
	60	4400	7750	7750	7750			4400	9500	10000	10000		
	100	7000	7750	7750				7000	10000	10000			
	125	7000	7750					7000	10000				
Setting 1 psig* Range 1 - 2 psig Spring Part No. 1H9758 27032 (Dark Blue) Droop 0.2 psi	2	500	750	1100	1400	2400	2800	500	750	1100	1400	2400	3000
	6	1100	1800	2600	4100	5500	5800	1100	1800	2600	4200	6200	7500
	14	1600	3200	5000	6600	8000	9500	1600	3200	5000	8000	10000	12000
	30	2400	5300	7750	8000	10000		2400	5400	9200	15000	15000	
	60	4300	9200	10000	10000			4400	9000	15000	15000		
	100	6800	10000	10000				7000	13000	15000			
	125	6800	10000					7000	13000				
Setting 3 psig* Rangeł 1-1/2 - 3-1/4 psig Spring Part No. 1H9759 27032 (Orange) Droop 0.6 psi	3	500	1000	1500	2000	3200	3600	500	1000	1500	2000	3200	3600
	7	1000	2200	3500	5500	7500	7600	1000	2200	3500	6000	8000	8800
	14	1500	3000	5800	8000	10000	12000	1500	3000	6000	11500	13500	14000
	30	2400	5100	9000	10000	12000		2400	5100	9500	20000	20000	
	60	4300	9200	12000	12000			4300	9000	16000	20000		
	100	6800	10000	12000				6800	14000	20000			
	125	6800	10000					6800	14000				

*Requires special heavy diaphragm plate construction.
†1-1/2 to 2-1/4 psig range for Type S203
NOTE: The capacity figures printed in black indicate optimum regulator performance, assuming full size outlet plumbing. Figures printed in color are capacity at maximum inlet pressure for that seat ring, spring and body size combination.

North American
Mfg. Co.
Cleveland, OH 44105 USA

THREE-PIPE BLEEDER

BULLETIN **86.54**
12-79 **86.55**

Series 8654 Bleeders assure constant gas/air proportioning on nozzle mix burners where maximum available gas pressure is less than the combustion blower air pressure. This three-pipe, aluminum-body bleeder permits constant gas/air ratio despite fluctuations in combustion chamber pressures.

Application. For any nozzle mixing burner system, where gas pressure at the regulator outlet is less than air pressure at the burner, pressure control systems fail to maintain gas/air ratios at higher air flow rates. It is necessary then to produce a pressure in the impulse line that is always less than but proportional to the pressure in the combustion air line. A bleeder in the impulse line between the combustion air line and the gas regulator permits a constant leak which reduces the air pressure impulse applied to the regulator to a proportionately lower value. The regulator outlet pressure will be less than, but proportional to, air line pressure over the entire range of firing rates.

Air/gas ratio changes due to combustion chamber pressure fluctuations are neutralized by connecting a third line from the bleeder to the combustion chamber (see piping sketch). This arrangement applies pressure variations to both sides of regulator control diaphragm.

Installation. Bleeders are required for nozzle mix systems wherever available gas pressure is less than the sum of combustion air pressure and gas pressure drop through the regulator (usually 2 osi or more for sufficient regulator capacity). Mount the bleeder to the air line, or as close as possible, 5 pipe diameters downstream, and at least 3 pipe diameters upstream, of any valve or fitting. Install the combustion chamber connection (when required) per the piping sketch below. Use ½" pipe or tubing, and keep its length to 10 feet or less to avoid excessive pressure drop.

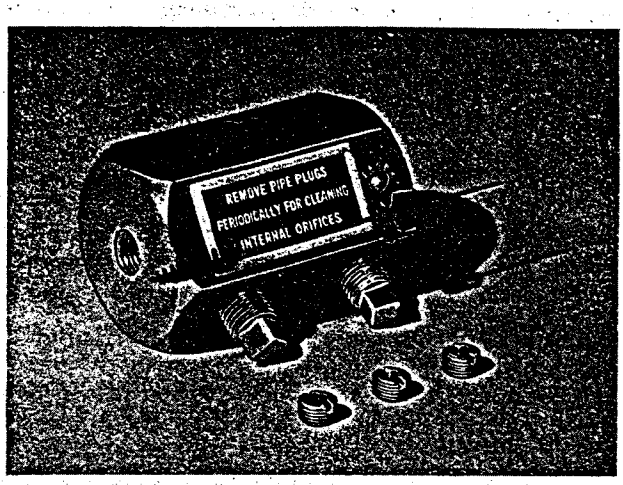

In **installations** with excessive dirt in the air, frequent cleaning is required. This is accomplished by brushing out all orifices. Clean-out plugs are provided in the opposite side of the bleeder body. The three-pipe Series 8654 Bleeder features a rust-proof aluminum body with interchangeable orifices and is furnished with an assortment of four orifice plugs. A convenient brush is provided for periodic orifice cleaning.

Where disassembly and cleaning of bleeders is not desirable, 8655 Bleeder-Filters can be substituted. Each unit consists of an 8654 Bleeder assembled to an 8647-01 Filter. Filter elements must be replaced regularly—dust accumulation increases their flow resistance, causing a decrease in impulse pressure to the regulator and lean operation of the burner. To avoid unnecessary delays in replacing elements, keep an adequate supply of spare filter elements on hand (PN2-4920-1).

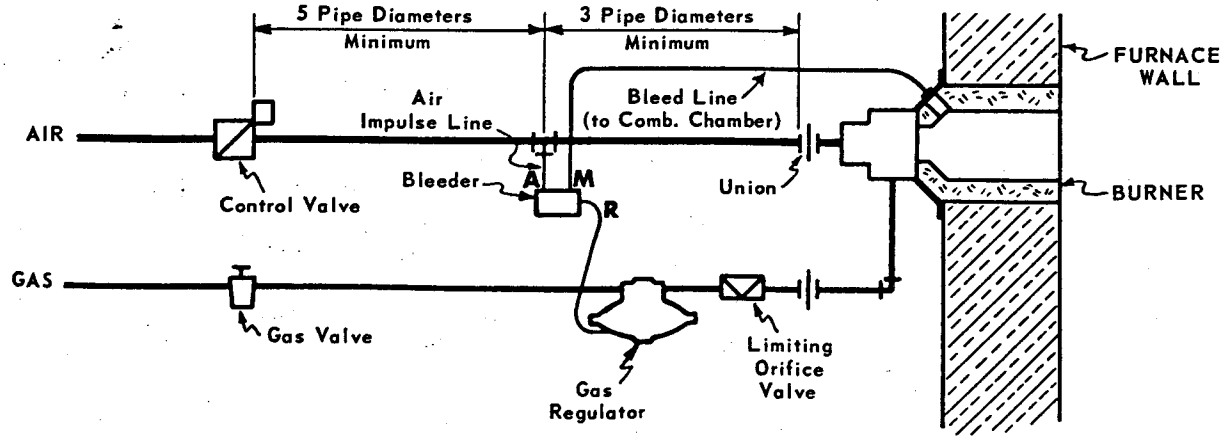

(over)

Selection. Choose a bleed orifice for an installation having 14 osi air pressure at the burner at high fire rate and 6½ osi gas pressure at the regulator inlet.

Allowing 2 osi pressure drop through the air/gas ratio regulator for required capacity, available gas pressure at the regulator outlet will be 4½ osi. 14 osi air impulse must then be bled to match 4½ osi gas or 4½ ÷ 14 = 32% air pressure required as regulator impulse. Since there is no standard 32% orifice bleed plug, use the 30% plug. When no orifice plug is available to permit exact matching of impulse and gas pressures, always choose an orifice that will provide an impulse pressure slightly lower than available gas pressure in order to have control throughout the entire range of firing rates.

If air and gas pressures are not known, find correct bleed orifice plug through trial and error as follows: Light the burner, bring it to high fire and adjust the limiting orifice valve for correct air/gas ratio. Then, starting with the smallest orifice plug, continue inserting plugs into the "M" opening using successively larger orifices (with correspondingly smaller % air impulse), until the flame indicates a drop in gas flow. Readjust the limiting orifice valve for correct air/gas ratio. The burner will then have its correct air/gas ratio for all firing rates.

	% Air Pressure desired as Impulse	Orifice Drill Size	Part Number
Standard	10	# 8	OA2-401-1
	30	25	OA2-401-2
	57	32	OA2-401-3
Special	15	15	
	20	19	
	40	29	
	70	38	
	82	44	

The user can make one of these orifices by drilling the blank plug included with each bleeder or by enlarging one of the 3 standard orifices (listed above) shipped with the bleeder. Orifice plugs should be drilled from the end opposite slot. Remove all burrs and insert plug so slotted surface is about ½" below bleeder body surface.

DIMENSIONS in Inches (and mm)

8654 Bleeder
Wt. 1 lb (0.45 kg)

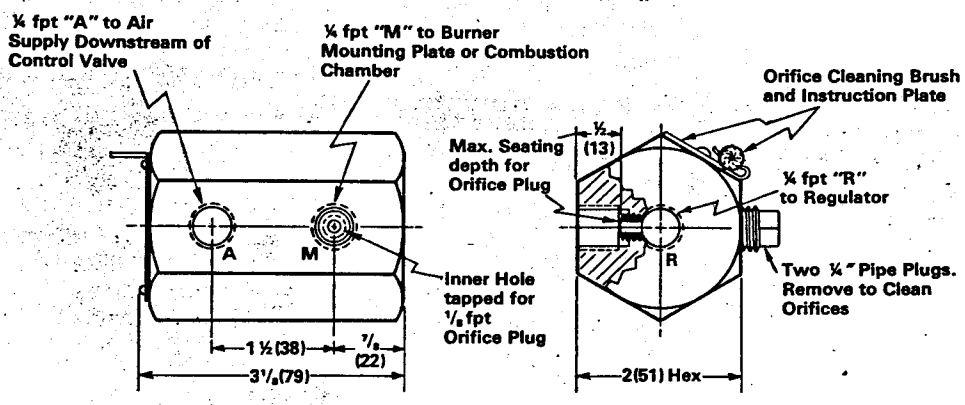

Metric Conversions

1 ft = 0.3048 m
1 osi = 0.004 39 kg/cm²
= 43.94 mm H_2O

8655 Bleeder-Filter
Wt. 2 lb (0.9 kg)

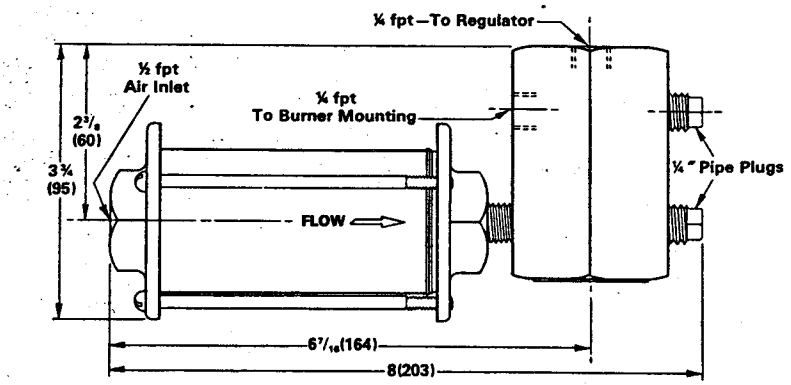

Order Must Specify: "8654 Bleeder", or "8655 Bleeder-Filter"
For specially drilled orifice plug, specify: "Special Orifice Plug for 8654, drill #____"

NAI279-86S4/8655-6000/T100

PRINTED IN U.S.A.

otherwise about the ID of the tubing selected in step 6 above). Remove burrs from the inside. To minimize turbulence effects, locate the connection on the air line at least 5 air pipe diameters downstream and 3 diameters upstream of any valve or fitting. If it is absolutely necessary to locate the connection less than 5 diameters downstream of the control valve, the hole should be drilled so that the drill is parallel to the shaft of the valve.

INSTALLATION FOR PREMIX BURNERS

1. For an open type premix burner, remove the thread protection cap from the vent and connect as shown in Figure 1. If the vent is piped outdoors, protect the end of the vent pipe from air currents, water, and dirt.
2. For a sealed-in type premix burner the vent of the Series 7218 Atmospheric Regulator should be cross-connected to the combustion chamber to correct the regulator action for any differences between furnace and atmospheric pressure. When one regulator is used for each burner, connect the vent through the burner mounting plate (as in Figure 2) or to the combustion area.

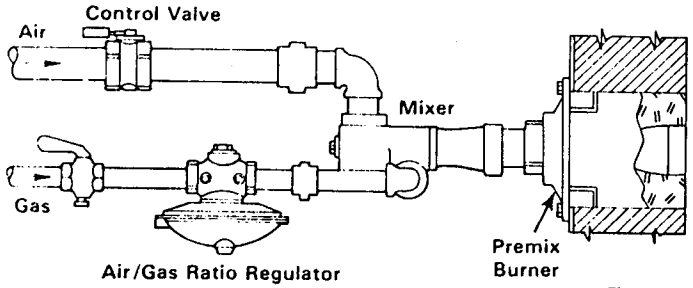

Figure 1

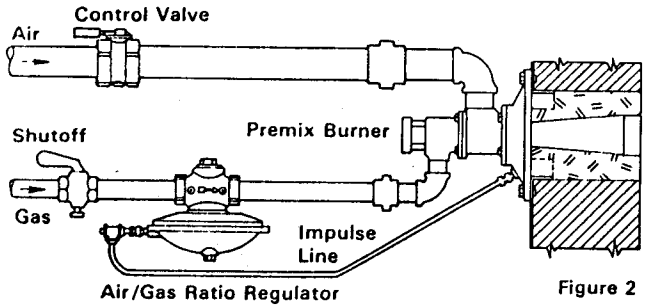

Figure 2

INSTALLATION FOR NOZZLE-MIX BURNERS

1. Install a limiting orifice valve between the regulator and burner.
2. If the minimum gas inlet pressure exceeds the maximum air pressure by 2 or more osi, simply cross-connect the regulator's vent to the main air line downstream of the control valve, as in Figure 3.

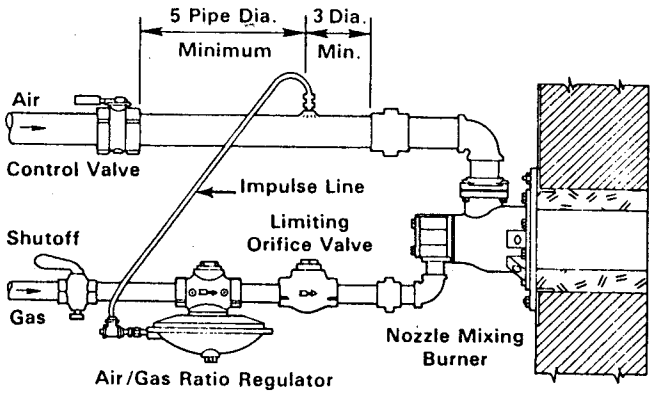

Figure 3

3. If the minimum gas pressure at the regulator inlet is not at least 2 osi more than the maximum air pressure available at the burner, then a bleeder must be installed in the air pressure impulse line, as shown in Figure 4, with the amount of bleed set so that maximum impulse pressure is 2 osi less than the gas inlet pressure. (See the Bleeder Bulletin.) This arrangement should be used only when combustion chamber pressures are atmospheric (open burner).
4. If gas and air pressure are not known, make a "trial and error" setting of the bleeder by lighting the burner and bringing it to high fire as described in step 3. Then successively reduce the impulse to the regulator by means of a bleed until you find a bleeder setting that produces an effect on the flame. This is the correct bleeder setting for all firing rates. Readjust the limiting orifice gas valve. (If gas pressure is not constant set the bleeder for the next lower impulse pressure.)

ratio is found. Replace the cover plug. The regulator is then adjusted for atomizing air plus main air at any firing rate, and the burner will have the same capacity when operating on gas as on oil. (If the burner cannot be lighted on atomizing air only, adjust the spring adjusting plug with the main air at low fire setting.)

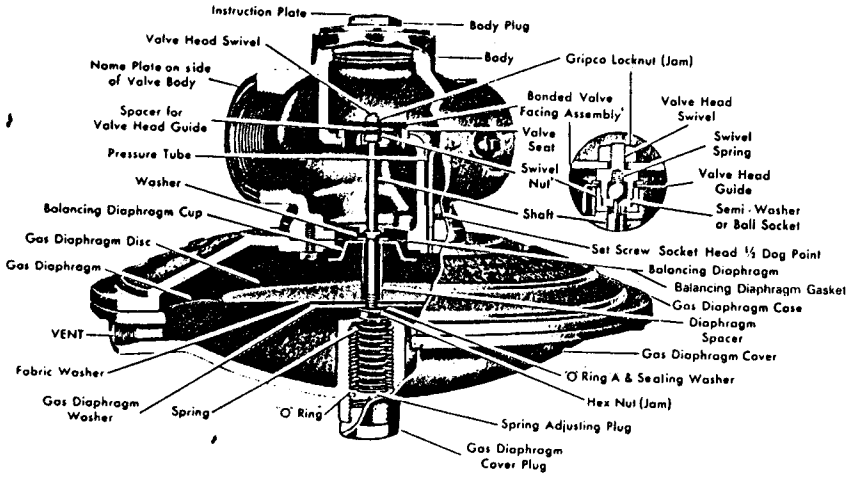

SERVICING

To check regulator operation, ⅛" pipe taps are provided on the body for inlet and outlet pressure readings.

Failure to Shut Off Tightly

1. If tight shutoff is desired but not obtained, first make sure that regulator has been adjusted for tight shutoff (Step 4 under Lighting And Adjustment).
2. Next remove air impulse connection to make sure there is no impulse during off period.
3. Attach a water gauge to the outlet test tap to show possible suction from furnace draft. To correct for this, cross-connect the regulator's vent to the combustion chamber as shown in Figure 2 or 5 on previous pages.
4. Shut off gas supply, remove body plug, apply air impulse (about 16 osi) to the vent to raise regulator valve off seat, wipe seat surfaces with cloth to remove possible pipe scale, dirt, pipe thread chips, or other foreign matter. Remove the air impulse and replace the body plug.

5. Shut off gas supply, remove body plug and inlet test tap plug. While pressing gently downward on regulator valve, attempt to blow through a rubber tube attached to the inlet test tap. If back pressure does not build up, the balancing diaphragm is ruptured and must be replaced. (As an alternate test, try to wobble the regulator valve with a finger. If the balancing diaphragm is intact it will hold the valve fairly rigid.)

Regulator Not Responsive

1. Make sure thread protection cap is removed from vent. If impulse line is used, make sure it is not clogged, undersized, or inoperative due to bad installation.
2. Make sure of mixer suction by shutting off gas supply and reading water gauge attached to outlet test tap while air flows through the mixer. If impulse line is used, disconnect from regulator vent and attach it to water gauge to observe impulse magnitude and changes.
3. If suction or impulse is satisfactory but regulator still is not responsive, shut off gas supply, remove outlet test plug, connect rubber tube to regulator vent and blow through tube. If pressure does not build up in the tube, the gas diaphragm is ruptured and must be replaced.

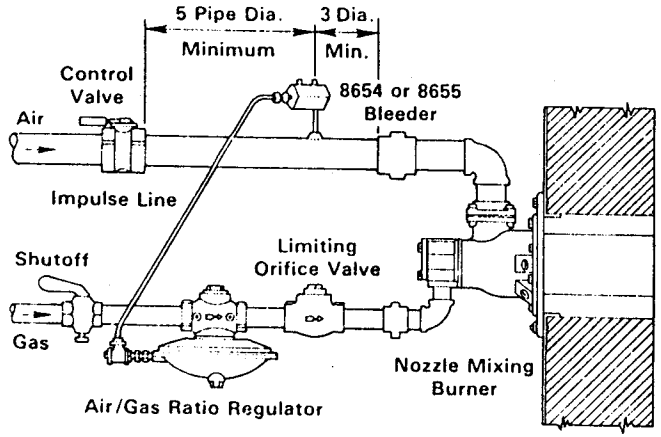

Figure 4

5. If the combustion chamber pressure fluctuates or is not atmospheric (sealed-in burners) and if gas pressure is less than air pressure, use a 3-pipe bleeder, as shown in Figure 5; this arrangement bleeds off a portion of the air impulse pressure to the combustion chamber so that fluctuations in combustion chamber pressure are neutralized by being applied to both sides of the controlling diaphragm in the gas regulator.

Note: A 3-pipe bleeder can be used as a 2-pipe bleeder when the combustion chamber is at atmospheric pressure. In this case the piping connection to the combustion chamber can be omitted.

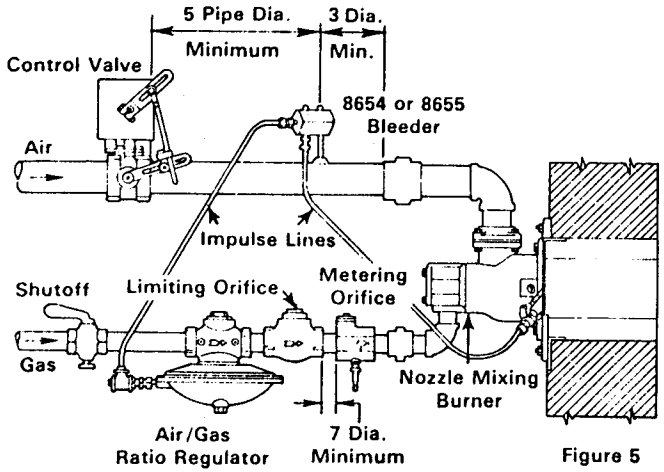

Figure 5

LIGHTING AND ADJUSTMENT

1. **Light the burner.** Follow the blower instructions to start the blower. All gas lines up to the 7218 Regulators must be purged. Follow the pilot instructions to light the pilot. Set the main air valve at the low fire position (1 or 2 osi air pressure). Open the limiting orifice gas valve 6 to 6½ turns. Open the upstream gas valve(s). If the burner does not light in a few seconds, close the nearest upstream gas shutoff valve to prevent accumulation of unburned gas, purge the chamber for a few minutes, and then open the limiting orifice gas valve a few more turns and reopen the gas shutoff valve. Repeat this procedure until the main flame lights.

2. **Adjust the high fire air/gas ratio.** Slowly turn the air valve to high fire position while adjusting the limiting orifice gas valve as needed to maintain the desired air/gas ratio. Replace the limiting orifice valve cover.

3. (For 7218 only, not 7216.) **Adjust the low fire air/gas ratio** only after step 2 is completed. Turn the air valve to low fire position. Remove the gas diaphragm cover plug on the bottom of the regulator. Use a screwdriver to turn the spring adjusting plug clockwise for more gas or counterclockwise for less gas to obtain the desired air/gas ratio. Replace the gas diaphragm cover plug.

4. (For 7218 only, not 7216.) **On-Off Control.** Set the regulator for tight shutoff by following the procedure in step 3, turning spring adjusting plug counterclockwise until spring compression is relaxed. (The soft seat has good lock-up characteristics under zero impulse pressure. However for extended periods of time at no flow conditions an approved shutoff valve should be used to prevent fuel leakage.)

5. **Dual-Fuel Burners.** When a nozzle-mix burner of the dual-fuel type is being operated on gas with atomizing air left on, the regulator must supply a constant amount of gas to match the atomizing air, plus a varying amount to match the main air at any firing rate. To adjust the regulator for this situation, first operate on main air only and follow the instructions under nozzle mix burners for making the cross-connection, adjusting the limiting orifice gas valve, and adjusting the bleed if any is required.

   Next turn off the main air (the flame will go out), and remove the gas diaphragm cover plug. Turn on the atomizing air at the pressure suggested for gas operation and screw the spring adjusting plug clockwise until the pilot relights the burner and the desired air/gas

North American
Mfg. Co.
Cleveland, OH 44105 USA

PILOT ACCESSORIES
Regulators, Solenoid Valves

SUPPLEMENT 40.15-1
9-79

Ref: Bulletin 40.15, Supplement 40.15-2

Atmospheric Pilot Regulators

"Zero gas" pilot systems require an atmospheric regulator to supply gas at zero gauge pressure to the pilot mixer. 7348-01 and 7218 Regulators perform this function. The 7348-01 is suited for single pilot installations; for multiple tips manifolded off a common mixer, use the larger 7218 Regulators.

If inlet gas pressure exceeds 8 osi to the 7348-01 or 2 psi to the 7218, use a pressure reducing regulator upstream. Series 7344 Regulators reduce up to 25 psi gas to 4-12"wc—see page 2.

For capacities or inlet pressures beyond the range of 7344 Regulators, see Bulletins 73.37 and 73.49.

7348-01

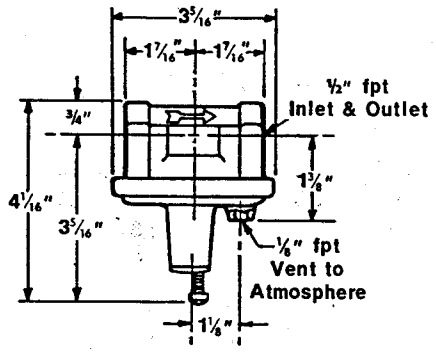

Weight 0.6 lb

Maximum Inlet Pressure: 8 osi
Outlet Pressure Range: −0.5"wc to +4.0"wc
Gases: Natural, LP, LP gas-air
Maximum Ambient Temperature: 200 F
Maximum Emergency Inlet Pressure: 2.5 psi
Installation Position: Horizontal run of pipe, spring cartridge down

Pressure Drop across Regulator, "wc	0.1	0.2	0.3
Capacity, cfh of 0.6 gravity gas	87	122	150 ①

① Maximum recommended capacity regardless of pressure drop.

7218

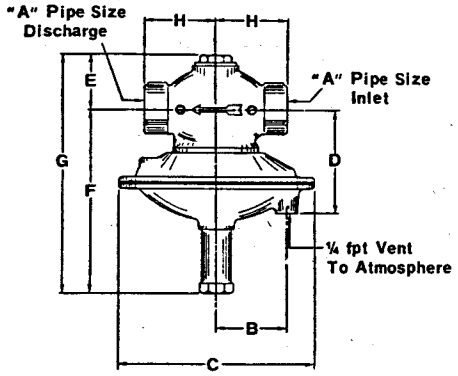

Maximum Inlet Pressure: 2 psi
Outlet Pressure Range: −1"wc to +1"wc
Gases: Natural, LP, LP gas-air
Maximum Ambient Temperature: 180 F
Maximum Shock Load: 4 psi
Installation Position: Horizontal Run of pipe, diaphragm below pipe

Regulator Designation	Dimensions in inches A	B	C	D	E	F	G	H	Wt, lb
7218-0	3/4	2 11/32	7 1/2	3 15/16	1 7/8	6 7/8	8 3/4	2 1/2	8
7218-1	1	2 11/32	7 1/2	3 15/16	2 1/16	6 7/8	8 15/16	2 3/4	8

Pressure Drop across Regulator, osi		1	2	2.5	3	4	6	8	10	12
Capacity, cfh of 0.6 gravity gas	7218-0	176	250	280	305	352	433	500	560	612
	7218-1	282	400	448	488	564	692	800	895	980

Gas Gravity Correction Factors — For a gas gravity different from 0.6 multiply the regulator capacity by the appropriate gravity factor.

Gas gravity	0.4	0.6	0.8	1.5	2.0
Gravity factor	1.22	1.00	0.868	0.632	0.547

(over)

Metric Conversions
1" = 25.40 mm
1"wc = 25.40 mm H_2O
1 osi = 43.94 mm H_2O = 0.004 39 kg/cm²
200 F ≈ 95 C
180 F ≈ 85 C
1 psi = 0.0703 kg/cm² = 703.1 mm H_2O
1 cfh = 0.028 32 m³/h
1 lb = 0.4536 kg

Pressure Reducing Regulators

7344-01 & -1

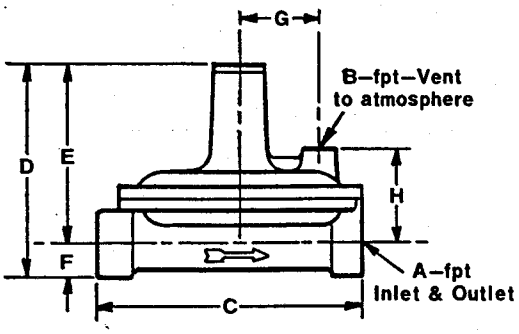

Maximum Inlet Pressure: 25 psi
Outlet Pressure Range: 4"wc to 12"wc
Gases: Natural, LP, LP gas-air
Maximum Ambient Temperature: 200 F
Maximum Emergency Inlet Pressure: 65 psi
Installation Position: Any position

Regulator Designation	Dimensions in inches A	B	C	D	E	F	G	H	Wt, lb
7344-01	½	⅛	4⅛	3½	2⅞	⅝	1¼	1½	¾
7344-1	1	⅜	5⅞	5¼	4 5/16	15/16	1¾	2½	1½

Capacity, cfh of 0.6 gravity gas		7344-01 Inlet Pressure, psi 0.5	1	2	5	10	25	7344-1 Inlet Pressure, psi 0.5	1	2	5	10	25
Outlet Press., "wc	4.0	180	273	384	428	360	—	400	495	560	674	660	530
	6.0	155	243	310	392	340	290	300	420	550	625	620	496
	8.0	122	212	263	310	288	275	200	300	395	500	480	590

Note: Regulator will not deliver 12"wc outlet pressure with less than 10 psi inlet pressure.

Gas Gravity Correction Factors

For a gas gravity different from 0.6, multiply the regulator capacity by the appropriate gravity factor.

Gas gravity	0.4	0.6	0.8	1.5	2.0
Gravity factor	1.22	1.00	0.868	0.632	0.547

SOLENOID VALVES 1485-01, 1485-02, and 1486-02

Solenoid Valve Number	1485-01 (½")	1485-02 (⅜")	1486-02 (⅜")
Capacity with 1"wc drop, 0.64 sp gr gas	201 cfh	65 cfh	55 cfh
Maximum pressure	6 psi	10 psi	100 psi
Weight	2 lb	¾ lb	1¼ lb

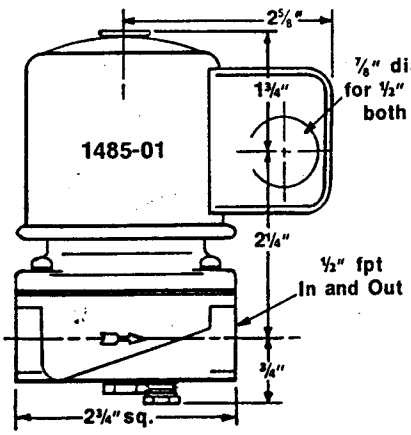

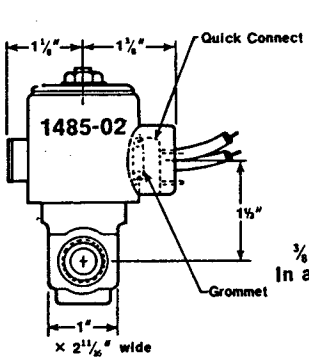

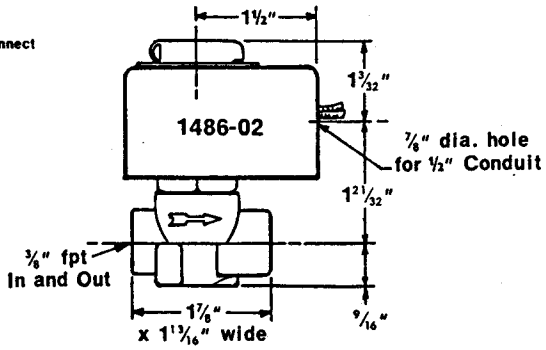

Specify electrical characteristics: 115/1/60 or 50, or 230/1/60 or 50

PRINTED IN U.S.A.

ENVIRONMENTAL CONTROL PRODUCTS, INC.
Charlotte, North Carolina

SHT. 1 OF 1 | LAST REV.

DATE OF COPY

LL INFORMATION CONTAINED HEREIN IS THE PROPERTY OF ENVI-
ONMENTAL CONTROL PRODUCTS, INC. AND MAY NOT BE DISCLOSED
OR USED WITHOUT WRITTEN PERMISSION.

BILL OF MATERIAL

FOR DWG. NO. S-0433M

INSTALLATION
BURROUGHS WELLCOME CO.
81 -108

Exhibit #14

REV.	ITEM	PART NUMBER	PART NAME	DESCRIPTION	QTY.
	1	5606D	1000T INCINERATOR (SPEC.)	SEE DWG. & B.M.	1
	2	4952D-281	SR-28H RAM FEEDER	SEE DWG. & B.M.	1
	3	E5592D	ELECTRICAL SYSTEM	SEE DWG. & B.M.	1
	4	4539D	HYDRAULIC SYSTEM	SEE DWG. & B.M.	1
	5	0813C-3	STACK SECTION (STRAIGHT)	SEE DWG.& B.M.	6
	6	1416B-4	SPARK ARRESTOR	SEE DWG. & B.M.	1
	7	5613M	SUPPORT LEG HARDWARE KIT	SEE B.M.	1
	8	5614M	FRONT SUPPORT HARDWARE KIT	SEE B.M.	1
	9	5615M	FLAMEPORT HARDWARE KIT	SEE B.M.	1
	10	5281M	STACK HARDWARE KIT	SEE B.M.	7

ITEM DETAIL ON DRAWING
)-ITEM REQUIRES NO DETAIL

ESS INDICATED OTHERWISE.
E DRAWING FOR SCHEDULED
MENSIONS OR NOTES.

FORM BOM-72

ENVIRONMENTAL CONTROL PRODUCTS, INC.
Charlotte, North Carolina

SHT. 1 OF 1 | LAST REV. A

DATE OF COPY

ALL INFORMATION CONTAINED HEREIN IS THE PROPERTY OF ENVIRONMENTAL CONTROL PRODUCTS, INC. AND MAY NOT BE DISCLOSED OR USED WITHOUT WRITTEN PERMISSION.

BILL OF MATERIAL

FOR DWG. NO. 5606D

1000T INCINERATOR FINAL ASSEMBLY: SPECIAL FOR BURROUGHS WELLCOME CO.
JOB NO. 81-108

REV.	ITEM	PART NUMBER	PART NAME	DESCRIPTION	QTY.
	1	5607D	IGNITION CHAMBER ASS'Y.	SEE DWG & B/M	1
	2	5608D	COMBUSTION CHAMBER	———	—
	—	———	ASS'Y.	SEE DWG & B/M	1
	3	5609M	BURNER & FUEL SYSTEM	SEE B/M	1
	4	5610M	COMBUSTION AIR SYSTEM	SEE B/M	1
	5	5605B-1	UNDERFIRE AIR SYSTEM	SEE DWG & B/M	1
	6	4011D-1	HYDRAULIC CHARGING	———	—
	—	———	DOOR ASS'Y.	SEE DWG & B/M	1
	7	0973D-1	CLEANOUT DOOR	SEE DWG & B/M	1
	8	0829D-6	CLEANOUT DOOR HINGE	SEE DWG & B/M	1
	9	5612C	SUPPORT LEG	SEE DWG & B/M	2
	10	4055C-1	VIEWING PORT W/ GATE	SEE DWG & B/M	1
	11	5271B	VIEWING PORT ASS'Y	SEE DWG & B/M	1
	12	5039C-3	LIQUID WASTE COVER	HRS PL 1/4 X 7 1/2 X 7 1/2	1
	13	ND	HEX HD CAP SCREW	3/8-16 UNC X 1 3/4 LG.	4
	14	ND	HEX NUT	3/8-16 UNC	4
	15	ND	LOCK WASHER	3/8 NOM	4
	16	ND	FLAT WASHER	3/8 NOM	4
	17	4501B-2	PIPE CAP W/ HANDLE	SEE DWG & B/M	28

*-ITEM DETAIL ON DRAWING
ND-ITEM REQUIRES NO DETAIL

UNLESS INDICATED OTHERWISE, SEE DRAWING FOR SCHEDULED DIMENSIONS OR NOTES.

FORM BOM-7

ENVIRONMENTAL CONTROL PRODUCTS, INC.
Charlotte, North Carolina

SHT. 1 OF 1 | LAST REV. C

DATE OF COPY

ECP INC

BILL OF MATERIAL

FOR DWG. NO. 4952D-281

FINAL ASSEMBLY
SR-28H HYDRAULIC RAM FEEDER
ARRANGEMENT "B" OR "C"
18½ SILL HEIGHT

ALL INFORMATION CONTAINED HEREIN IS THE PROPERTY OF ENVIRONMENTAL CONTROL PRODUCTS, INC. AND MAY NOT BE DISCLOSED OR USED WITHOUT WRITTEN PERMISSION.

REV.	ITEM	PART NUMBER	PART NAME	DESCRIPTION	QTY.
	1	4951D-281	FEEDER FRAME ASSEMBLY	SEE DWG. & B.M.	1
	2	5476D	RAM ASSEMBLY	SEE DWG. & B.M.	1
	3	4950D-1	HATCH COVER ASSEMBLY	SEE DWG. & B.M.	1
	4	5471D	CARRIAGE ASSEMBLY	SEE DWG. & B.M.	1
	5	5472B	CYLINDER MOUNTING BRACKET	SEE DWG. & B.M.	1
	6	0838C	WATER SPRAY ASSEMBLY	SEE DWG. & B.M.	1
	7	3973A	HATCH COVER CYLINDER	2½"BORE, 1" ROD, 20"STROKE	2
	8	ND	PILLOW BLOCK	FAFNIR- RAO 1-7/16	2
	9	0686A	LEVELING PAD	3/8 x 3" HRS FLAT x 3" LG.	6
	10	ND	SQ. HD SET SCREW	5/8 - 11 UNC x 2½ LG	6
	11	ND	HEX HD CAP SCREW	½ - 13 UNC x 2" LG	4
	12	ND	HEX HD CAP SCREW	5/8 - 11 UNC x 1¼ LG	4
	13	ND	HEX NUT	5/8 - 11 UNC	4
	14	ND	LOCK WASHER	5/8 - NOM	4
	15	ND	GUARD EXPANDED METAL	½ - 13-15 FLAT x 32¼ x 21-1/8	4
	16	ND	U.V. SCANNER	SEE ELECTRICAL B.M.	1
	17	ND	LOCK WASHER	½ NOM	4

ITEM DETAIL ON DRAWING
ND-ITEM REQUIRES NO DETAIL

UNLESS INDICATED OTHERWISE,
SEE DRAWING FOR SCHEDULED
DIMENSIONS OR NOTES.

FORM BOM-72

NVIRONMENTAL CONTROL PRODUCTS, INC.
Charlotte, North Carolina

SHT. 1 OF 1 | LAST REV.

DATE OF COPY

L INFORMATION CONTAINED HEREIN IS THE PROPERTY OF ENVI-NMENTAL CONTROL PRODUCTS, INC. AND MAY NOT BE DISCLOSED R USED WITHOUT WRITTEN PERMISSION.

ECP INC

BILL OF MATERIAL

FOR DWG. NO. 4011D-1

SIDE LIFT HYDRAULIC CHARGING DOOR 41"x31"

REV.	ITEM	PART NUMBER	PART NAME	DESCRIPTION	QTY.
	1	4012D-1	41"x31" DOOR	SEE DWG AND B.M.	1
	2	4013C-1	CYLINDER MOUNT	" " " "	1
	3	4013C-2	CYLINDER MOUNT	" " " "	1
	4	4014B-1	DOOR LIFT BAR	1"x5½ C1018 CFS FLAT x 64¼ LG.	1
	5	3883A	HYDRAULIC CYLINDER	2" BORE x 1⅜ ROD x 33" STROKE	2
	6	4015D-1	HOOD	SEE DWG AND B.M.	1
	7	10-0705A-1	INSULATION	INSBLOK-19 1"x12"x36"	4 PCS
	8	4016B-1	HEAT SHIELD RETAINER	½-NO. 13 CARBON STEEL FLATTENED EXPANDED METAL x 20"x48"	2
*	9	NO	LIMIT SWITCH	MICROSWITCH #LSA3K-2BC	2
	10	4017A	MOUNTING PAD	⅝ x 2" HRS FLAT x 2" LG	6
	11	4018B	RAM CLAMP BAR	SEE DWG AND B.M.	2
	12	NO	LOCATING PAD	⅝ x 2" HRS FLAT x 2" LG.	2
	13	NO	SOCKET HD. CAP SCREW	5/16-18 x 1" LG.	16
	14	NO	LOCK WASHER	5/16 NOM.	37
	15	NO	HEX HD. CAP SCREW	5/16-18 x ½ LG.	9
	16	NO	HEX HD. CAP SCREW	5/16-18 x 1½ LG.	12
	17	NO	FLAT WASHER	5/16 NOM.	12
	18	NO	HEX NUT	5/16-18	12
	19	NO	RD HD. MACH. SCREW	#8-32 x 2¼ LG.	4
	20	NO	LOCK WASHER	#8 NOM.	4
	21	NO	FLAT WASHER	#8 NOM.	4
	22	NO	HEX. NUT	#8-32	4
	23	NO	HEX HD. CAP SCREW	½-13 x 1" LG	6
	24	NO	LOCK WASHER	½ NOM.	6

ITEM DETAIL ON DRAWING
ITEM REQUIRES NO DETAIL

* THIS ITEM ALSO APPEARS ON ELECTRICAL BILL OF MATERIAL

ESS INDICATED OTHERWISE.
DRAWING FOR SCHEDULED
ENSIONS OR NOTES.

FORM BOM-72

ENVIRONMENTAL CONTROL PRODUCTS, INC.
Charlotte, North Carolina

TOLERANCE

SHT. 1 OF 2 | LAST REV. A

DATE OF COPY

ALL INFORMATION CONTAINED HEREIN IS THE PROPERTY OF ENVIRONMENTAL CONTROL PRODUCTS, INC. AND MAY NOT BE DISCLOSED OR USED WITHOUT WRITTEN PERMISSION.

BILL OF MATERIAL

FOR DWG. NO. 4539D

HYDRAULIC POWER SYSTEM

FOR INCINERATOR AND RAM FEEDER WITH DUAL CYLINDER HINGED HATCH

REV.	ITEM	PART NUMBER	PART NAME	DESCRIPTION	QTY.
	1	37670-3	HYDRAULIC POWER UNIT	SEE DWG & B.M.	1
	2	NO	DIRECTIONAL VALVE	DOUBLE A QF-01-C-10F2	3
	3				
	4	NO	BALL VALVE	APOLLO NO. 76-101-01	2
	5	NO	PRESSURE SWITCH	DELTA # PS-2000	1
	6	NO	FLOW CONTROL	M&M MICRO-FLO KLF-375B	5
	7	NO	HOSE	LENZ # 8KR	25FT
	8	NO	SWIVEL HOSE FITTING	LENZ # 121-8	12
	9	NO	ADAPTOR	LENZ # 3100-8	1
	10	NO	90° ELBOW	LENZ # 3400-8	4
	11	NO	90° ELBOW	LENZ # 3400-8-4	2
	12	NO	UNION	LENZ # 3300-8	8
	13	NO	TEE	LENZ # 5600-8	2
	14	NO	TUBE CLAMP	STAUFF # LB-1/2	16
	15	NO	HYDRAULIC TUBING.	1/2 O.D. x 20 GA. SEAMLESS HYDRAULIC STEEL TUBING	80FT.
	16	NO	HEX BUSHING	1/2 NPT X 3/8 NPT STEEL	6
	17	NO	HEX BUSHING	3/8 NPT X 1/4 NPT STEEL	3
	18	NO	HEX BUSHING	3/4 NPT X 3/8 NPT STEEL	2
	19	NO	TEE	3/8 NPT 2000 #	3
	20	NO	NIPPLE, CLOSE	3/8 SCHED. 80 STEEL	2
	21	NO	NIPPLE, CLOSE	1/4 SCHED. 80 STEEL	2
	22	NO	NIPPLE	3/8 SCHED. 80 STL. X 4" LG	6
	23	NO	SOCKET HD. CAP SCREW	1/4-20 x 1 3/4 LG	12
	24	NO	HEX HD CAP SCREW	1/4-20 x 1 1/4 LG	16
	25	NO	LOCK WASHER	1/4 NOM.	28

ITEM DETAIL ON DRAWING
-ITEM REQUIRES NO DETAIL

LESS INDICATED OTHERWISE,
E DRAWING FOR SCHEDULED
MENSIONS OR NOTES.

NVIRONMENTAL CONTROL PRODUCTS, INC.
Charlotte, North Carolina

OLERANCE

SHT. 2 OF 2 | LAST REV. A

XT
SY.

DATE OF COPY

LL INFORMATION CONTAINED HEREIN IS THE PROPERTY OF ENVI-ONMENTAL CONTROL PRODUCTS, INC. AND MAY NOT BE DISCLOSED USED WITHOUT WRITTEN PERMISSION.

ECP INC

BILL OF MATERIAL

FOR DWG. NO. 4539D

HYDRAULIC POWER SYSTEM

FOR INCINERATOR AND RAM FEEDER WITH DUAL CYLINDER HINGED HATCH

EV.	ITEM	PART NUMBER	PART NAME	DESCRIPTION	QTY.
	26	NO	HYDRAULIC FLUID	E.F. HOUSHTON HOUGHTO-SAFE 520	25 GAL.
	27	NO	TEE UNION	LENZ 3700-8	4

ITEM DETAIL ON DRAWING
TEM REQUIRES NO DETAIL

LESS INDICATED OTHERWISE,
E DRAWING FOR SCHEDULED

ENVIRONMENTAL CONTROL PRODUCTS, INC.
Charlotte, North Carolina

SHT. 1 OF 2 | LAST REV. E

DATE OF COPY

ALL INFORMATION CONTAINED HEREIN IS THE PROPERTY OF ENVIRONMENTAL CONTROL PRODUCTS, INC. AND MAY NOT BE DISCLOSED OR USED WITHOUT WRITTEN PERMISSION.

BILL OF MATERIAL

FOR DWG. NO. 3767D-3

HYDRAULIC POWER UNIT
7 GPM, 750 PSI, 20 GAL RES.
3 VALVE STATION (NFPA D02)

REV.	ITEM	PART NUMBER	PART NAME	DESCRIPTION	QTY.
	1	3768D	RESERVOIR	SEE DWG. & B. M.	1
E	2	3769D	TOP PLATE	SEE DWG. & B. M.	1
	3	3770A	GASKET	SEPCO 200, 1/8 x 7/8 x 30"	2
	4	3771A	GASKET	SEPCO 200, 1/8 x 7/8 x 16¼	2
E	5	ND	GEAR PUMP	VICKERS V10-1P5P -1A20	1
	6	ND	BELL ADAPTOR	HESCO #25-47-2A	1
	7	ND	COUPLING	LOVEJOY #AL-100, 3/4 BORE, 3/16 KEY, 1-1/8 BORE, ¼ KEY	1
	8	ND	MOTOR	5 HP, 1725 RPM, 184T FRAME "C" FACE TEFC	1
	9	ND	INLET STRAINER	LENZ #49-20-R-3	1
	10	ND	RELIEF VALVE	SUN - RPGCJBV	1
	11	ND	MANIFOLD	PHD #DPP-03 4 02-RC	1
	12	3772A	GASKET	SEPCO 200, 1/8 x 3¼ x3-3/4	1
*	13	ND	RETURN LINE FILTER	LENZ #CP-500-10P	1
	14	ND	FLUID LEVEL GAUGE	LENZ #550-3	1
	15	ND	FILLER CAP/BREATHER	LENZ #FCS-537W	1
	16	ND	PRESSURE GAUGE	0-2000 PSI, ½NPT BOTTOM MOUNT	1
	17	ND	HEX HD CAP SCREW	3/8 - 16 x 1½ LG	2
	18	ND	LOCK WASHER	3/8 NOM	6
	19	ND	HEX HD CAP SCREW	½ - 13 x 1½ LG	4
	20	ND	LOCK WASHER	½ NOM	4
E	21	ND	HEX HD CAP SCREW	¼ - 20 x 3/4 LG	20
E	22	ND	LOCK WASHER	¼ NOM	20
	23	ND	HEX NUT	¼ - 20	14

-ITEM DETAIL ON DRAWING
D-ITEM REQUIRES NO DETAIL

* FILTER ONLY LENZ #CP-752-10

UNLESS INDICATED OTHERWISE,
SEE DRAWING FOR SCHEDULED
DIMENSIONS OR NOTES.

ENVIRONMENTAL CONTROL PRODUCTS, INC.
Charlotte, North Carolina

SHT. 2 OF 2 | LAST REV. E

DATE OF COPY

XT
SSY.

LL INFORMATION CONTAINED HEREIN IS THE PROPERTY OF ENVIRONMENTAL CONTROL PRODUCTS, INC. AND MAY NOT BE DISCLOSED OR USED WITHOUT WRITTEN PERMISSION.

BILL OF MATERIAL

FOR DWG. NO. 3767D-3

HYDRAULIC POWER UNIT
7 GPM, 750 PSI, 20 GAL RES.
3 VALVE STATION (NFPA D02)

REV.	ITEM	PART NUMBER	PART NAME	DESCRIPTION	QTY.
	24	ND	HEX HD CAP SCREW	3/8 - 16 x 1" LG	4
	25	3773A	GASKET	SEPCO 200,1/8 x 9" DIA	1
E	26	5463C	COVER PLATE & GASKET	SEE DWG. & B.M.	1
	27				
	28	ND	STEEL PIPE NIPPLE	½ SCHD. 40 CLOSE	2
	29	ND	STEEL PIPE NIPPLE	½ SCHD. 40 x 4" LG	2
	30	3774A	RETURN PIPE	½ SCHD. 40 STEEL x 12" LG	1
	31	ND	90° STREET ELBOW	½ NPT MALLEABLE IRON	2
	32	ND	UNION	½ NPT MALLEABLE IRON	2
	33	ND	INLET PIPE	1" SCHD. 40 x 3" LG	1
E	34	ND	90° STREET ELBOW	1" NPT MALLEABLE IRON	2
E	35	ND	HEX BUSHING	1¼ NPT x 1" NPT MALL.IRON	1
	36	ND	HEX BUSHING	3/4 NPT x¼ NPT 2000 LB STL	1
	37	ND	SQ HD PIPE PLUG	½ NPT	1
	38	ND	SEAMLESS STL HYD TUBING	½ OD x 20 GA WALL x 26"LG	1
	39	ND	SEAMLESS STL HYD TUBING	½ OD x 20 GA WALL x 24"LG	1
	40				
	41	ND	MANIFOLD BLOCK-OFF PLATE	PHD #CP-02-4	0
E	42				
E	43	ND	MALE CONNECTOR	LENZ # 3100-8-8	1
	44				
	45				
	46	ND	ADAPTOR	LENZ #3100-8-8	1
	47	ND	ADAPTOR	LENZ #3100-8-12	2

-ITEM DETAIL ON DRAWING
)-ITEM REQUIRES NO DETAIL

ILESS INDICATED OTHERWISE,
:E DRAWING FOR SCHEDULED
MENSIONS OR NOTES.

ENVIRONMENTAL CONTROL PRODUCTS, INC.
Charlotte, North Carolina

SHT. 1 OF 5 | LAST REV.

DATE OF COPY

ALL INFORMATION CONTAINED HEREIN IS THE PROPERTY OF ENVIRONMENTAL CONTROL PRODUCTS, INC. AND MAY NOT BE DISCLOSED OR USED WITHOUT WRITTEN PERMISSION.

BILL OF MATERIAL

FOR DWG. NO. E5592D

ELECTRICAL T-SERIES
DUAL FUEL (I.R.I.)
SR28H, MANUAL OVERRIDE
MODULATED AIR 460V 3Ø 60HZ

REV.	ITEM	PART NUMBER	PART NAME	DESCRIPTION	QTY.
			ENCLOSURES		
			MAIN CONTROL, MOTOR CONTROL	McKINSTRY 55-483612LP	2
			RAM	" " 55-36308LP	1
			PANEL	" " 42-4836	2
			PANEL	" " 42-3630	1
			STARTERS		
			1M, 3M, 4M, 6M	SYLVANIA T13V030-76	4
			2M, 5M,	" " T13V031-76	2
			FUSE HOLDERS		
			1M, 2M, 3M, 4M, 5M, 6M	ALLEN BRADLEY 1491N126	6
			115V CONTROL	BUSS 3743	1
			END PLATE	BUSS 3742	1
			FUSES		
			1M	BUSS FRS 5 AMP	3
			2M, 5M	BUSS FRS 20 AMP	6
			3M, 4M	BUSS FRS 10 AMP	6
			6M	BUSS FRS 15 AMP	3
			HEATERS		
			1M	SYLVANIA 2419	3
			2M	"" "" 2445	3
			3M	"" "" 2425	3

ITEM DETAIL ON DRAWING
NO-ITEM REQUIRES NO DETAIL

UNLESS INDICATED OTHERWISE,
SEE DRAWING FOR SCHEDULED
DIMENSIONS OR NOTES.

FORM BOM-72

ENVIRONMENTAL CONTROL PRODUCTS, INC.
Charlotte, North Carolina

SHT. 2 OF 5 | LAST REV.

DATE OF COPY

CT
SY.

ALL INFORMATION CONTAINED HEREIN IS THE PROPERTY OF ENVIRONMENTAL CONTROL PRODUCTS, INC. AND MAY NOT BE DISCLOSED OR USED WITHOUT WRITTEN PERMISSION.

BILL OF MATERIAL

FOR DWG. NO. E5592D

ELECTRICAL

REV.	ITEM	PART NUMBER	PART NAME	DESCRIPTION	QTY.
			HEATERS		
			4M, 5M	SYLVANIA 2432	6
			6M	"" "" 2439	3
			CIRCUIT BREAKER		
			MAIN CIRCUIT BREAKER	ITE EE3B050	1
			HANDLE MECH.	KIT D11CE2	1
			TRANDFORMER		
			460V to 120V 1KVA	GEN. ELECT. 9T58B2812	1
			COVER MOUNTED 24V	HONEYWELL 130810A	3
			CONTROL RELAYS		
			600VAC 120V COIL 60HZ	SYLVANIA P6-40	20
			" " " " "	" " P6-80	4
			CONTROL FUSES		
			120V-	BUSS FNM 10A	1
			CONTROL TIMERS		
			PRE-PURGE, RAM FWD	EAGLE SIGNAL BR16A6	2
			SHUTDOWN	E.S. BR112A6	1
			program	e.s. br110A6	1
			FLAMEPORT AIR	E.S. BR118A6	1

ITEM DETAIL ON DRAWING
ND-ITEM REQUIRES NO DETAIL

NLESS INDICATED OTHERWISE,
EE DRAWING FOR SCHEDULED
IMENSIONS OR NOTES.

FORM BOM-7

ENVIRONMENTAL CONTROL PRODUCTS, INC.
Charlotte, North Carolina

SHT. 3 OF 5 | LAST REV.

DATE OF COPY

ALL INFORMATION CONTAINED HEREIN IS THE PROPERTY OF ENVIRONMENTAL CONTROL PRODUCTS, INC. AND MAY NOT BE DISCLOSED OR USED WITHOUT WRITTEN PERMISSION.

BILL OF MATERIAL

FOR DWG. NO. E5592D

ELECTRICAL

REV.	ITEM	PART NUMBER	PART NAME	DESCRIPTION	QTY.
			DELAY TIMERS		
			SOLID STATE	ARTISAN USA 403	10
			PRESSURE SWITCH		
			HYDRAULIC	DELTA PS 2000	1
			TEMPERATURE CONTROLS		
			UPPER, LOWER CHAMBER, HIGH LIMIT	A.P.I.LFE 303X 0-3000°F	3
			MODULATION CONTROLLER	PARTLOW BF76 2000-501-2000	3
			THERMOCOUPLE	HONEYWELL G615R12-1	3
			BURNER CONTROLS		
			COMBUSTION PROGRAMMERS	HONEYWELL 4795D1002	2
			PRE-PURGE CARD	H.W. ST71A1042	2
			AMPLYFIER U.V.	H.W. R7290A1001	2
			U.V. DETECTOR	H.W. C7035A1023	3
			LOW AIR PRESSURE	H.W. C645A1022	2
			LOW OIL PRESSURE	H.W. L404Y1027	1
			BASE	H.W. Q270A1024	3
			FLAME DETECTOR RAM	H.W. R7023C1001	1
			LIMIT SWITCHES		
			ARM ACTUATED	MICRO LSA3K	6
			ARM	MICRO LSZ52B	6

ITEM DETAIL ON DRAWING
NO-ITEM REQUIRES NO DETAIL

UNLESS INDICATED OTHERWISE,
SEE DRAWING FOR SCHEDULED
DIMENSIONS OR NOTES.

FORM BOM-72

ENVIRONMENTAL CONTROL PRODUCTS, INC.
Charlotte, North Carolina

SHT. 4 OF 5 | LAST REV.

XT ASSY. | DATE OF COPY

ALL INFORMATION CONTAINED HEREIN IS THE PROPERTY OF ENVIRONMENTAL CONTROL PRODUCTS, INC. AND MAY NOT BE DISCLOSED OR USED WITHOUT WRITTEN PERMISSION.

BILL OF MATERIAL

FOR DWG. NO. E5592D

ELECTRICAL

REV.	ITEM	PART NUMBER	PART NAME	DESCRIPTION	QTY.
			MOTORIZED VALVES		
			1MV, 2MV, 3MV,	~~H.W. M744A1014~~ M7445-1009	3
			RESISTOR KIT	H.W. 24400102-001	3
			INDICATOR LIGHTS & ALARMS		
			LAMP HOUSING	GEN. ELECT. CR103401	10
			LAMP	GEN ELECT. G56	10
			LENSE (RED)	DIALCO 103-1331-403	4
			" " (GREEN)	" " " "	2
			" " (AMBER)	" " " "	1
			" (BLUE)	" " " "	1
			" (WHITE)	" " " "	2
			ALARM HORN	EDWARDS 876-N5	1
			Switches & Pushbuttons		
			2 POS. MAINT. CONTACT.KEY	SW. MCRO PTKBS2221B8	3
			MOM. CONTACT PUSHBUTTON	SYLVANIA 100T-PB46-11X	4
			" " "	" " 100T-PB46-20X	1
			" " "	" " 100T-PB4B-11X	1
			" " "	" " 100T-PB4R-11X	4
			WIREWAY	PANDUIT 2x2LG6	6'
			COVER	" " 2LG6	6'

-*-ITEM DETAIL ON DRAWING
ND-ITEM REQUIRES NO DETAIL

UNLESS INDICATED OTHERWISE, SEE DRAWING FOR SCHEDULED DIMENSIONS OR NOTES.

FORM BOM-

Environmental Control Products, Inc.
Post Office Box 240707 / Charlotte, North Carolina 28224 / Telephone Area 704-588-1620
Tlx 572-549

September 27, 1983
WNW: 83/118

Burroughs Wellcome
3030 Cornwallis Road
Research Triangle Park, NC 27709

Attention: Mr. Ken Carpunky

Re: Field Service Trip
Sept. 21 & 22, P.O. E23082

Dear Ken:

Enclosed please find a copy of our Mr. Wiese's field service report on his visit to your incinerator.

Also enclosed is literature as requested on the North American burner components.

If we can be of further assistance please feel free to contact us.

Sincerely yours,

W.N. Weaver
Vice President Manufacturing
Field Service Director

WNW:dd

Enc.

cc: Service File

FIELD SERVICE CALL TO BURROUGHS WELLCOME
SEPT. 21 & 22, 1983

This call was made at the request of Ken Carpunky of Burroughs Wellcome to correct a problem of repeated flame failures of both the combustion and ignition burners.

I arrived at Burroughs Wellcome at 3:00 PM on September 21, 1983. Mr. Carpunky stated that the burner operation had always been erratic and this was a particularly bad problem with them since they must record temperatures all the time to assure that minimum temperatures are maintained at all times while they are burning their hazardous waste.

Both burner pilot assemblies have been changed per the instruction of ECP and Virgil Davis. The pilot gas solenoids have been moved so that they are downstream of the regulators. An additional pressure regulator has been added upstream of the zero regulators. Virgil Davis had recommended the pressure regulators since the zero regulators have a maximum inlet rating of 8 osi. These pressure regulators had not been adjusted and the pressure at the inlet of the zero regulators was in excess of 8 osi. This pressure was adjusted to 8 in. H_2O and the pilots were readjusted. The cooling air to the U.V. tubes was excessive and thh copper tube supplying the air was pinched off to reduce this air flow.

After adjusting the pilots they seemed to be much more stable. After cycling the burners numerous times the unit was left on all night. Left the jobsite at 7:30 PM.

Thursday, Sept. 22, 1983

Arrived at 8:00 AM. Found that the bottom burner had misfired one time during the night and that was the only failure. Adjusted the pots on all modulating controllers. Burroughs Wellcome could use their modulating upper burner to good advantage and possibly save some fuel. An air pressure switch of lower range would allow the burner to be modulated to lower output and thus give better control.

After watching the operation for some time its obvious that the orifice in the main pressure regulator is too small. The data plate on this regulator indicates a 3/4" orifice. A 1" and 1-3/16" orifice are available for that regulator. An inlet pressure at the regulator under <u>flow conditions</u> should be determined and the proper orifice selected from the flow charts.

The zero regulator on the upper burner is mounted stem down and the one on the lower burner was stem up. I told Ken Carpunky that I was unsure on that regulator which was correct. In checking it out the upper burner is correct. The bottom burner zero (Maxitrol) regulator should be inverted and the pilot readjusted.

All other systems on the unit seemed to be functioning well. Left the jobsite at about 12:00 Noon.

Jerry Wiese

cc: Mr. Ken Carpunky

Regulator Sizing Data

Table 6. Capacity Data—Types S201, S201N, S202, S203 in SCFH of 0.6 Specific Gravity Gas

OUTLET PRESSURE SETTING, RANGE, SPRING PART NO., AND DROOP	MAXIMUM INLET PRESSURE, PSIG	1-1/2" BODY SIZE						2" BODY SIZE					
		Seat Ring Size, Inches						Seat Ring Size, Inches					
		1/4	3/8	1/2	3/4	1	1-3/16	1/4	3/8	1/2	3/4	1	1-3/16
Setting 4" w.c. Range 2" - 4-1/2" w.c. Spring Part No. 1D8925 000A2 (Brown) Setting 6" w.c. Range 3-1/2" - 6-1/2" w.c. Spring Part No. 1D8926 000A2 (Red) Droop 1" w.c.	10" w.c. 1/2 1 1-1/2 2 5 13 25 60 100 125	400 500 600 950 1600 2300 4400 6800 6800	800 1050 1300 2200 3600 5000 7750 7750 7750	1200 1600 2100 3300 6200 7750 7750 7750	1000 1400 2100 2800 4500 7000 7750 7750	1400 1600 2500 3500 5300 7750 7750	1600 1800 2700 3800 6000 7750	400 500 600 1000 1650 2400 4450 7000 7000	900 1100 1400 2300 3700 5200 9000 10000 10000	1300 1700 2200 3700 6500 9200 10000 10000	1200 1700 2800 3600 4500 7800 10000 10000 10000	1600 2200 3200 4300 5500 9500 10000 10000	1800 2400 3800 5000 6400 10000 10000
Setting 7" w.c. Range 5" - 9" w.c. Spring Part No. 1D8927 000A2 (Black) Droop 1" w.c.	10" w.c. 1/2 1 1-1/2 2 5 13 25 60 100 125	400 500 600 950 1600 2200 4300 6800 6800	800 1050 1300 2100 3500 5000 7750 7750 7750	1100 1500 1900 3200 6100 7750 7750 7750	900 1200 1900 2300 2600 4000 6600 7750 7750	1300 1550 2300 2800 3300 5100 7750 7750	1450 1750 2500 3100 3600 5600 7750	400 500 600 1000 1650 2400 4450 7000 7000	800 1050 1300 2100 3500 5200 9000 10000 10000	1200 1600 2000 3500 6400 9100 10000 10000	950 1500 2300 3100 4000 7700 10000 10000 10000	1400 1800 2800 3600 4500 9200 10000 10000	1600 2000 3300 4500 6000 10000 10000
Setting 11" w.c. Range 8-1/2" - 18" w.c. Spring Part No. 1D8932 000A2 (Gray) Droop 2" w.c.	1/2 1 1-1/2 2 5 13 25 60 100 125	400 500 600 950 1600 2100 4400 7000 7000	700 950 1200 2000 3400 4700 7750 7750 7750	1100 1450 1760 2900 5200 7750 7750 7750	800 1800 2300 2700 3900 6500 7750 7750	1500 2200 2800 3200 5100 7750 7750	1700 2450 2900 3300 5600 7750	400 500 600 1000 1600 2400 4450 7000 7000	750 1000 1200 2000 3400 4800 8900 10000 10000	1100 1450 1700 3000 6200 8900 10000 10000	800 1800 2500 3100 7300 10000 10000 10000	1500 2500 3400 4200 8000 10000 10000	1700 2900 4000 5000 9500 10000
Setting 20" w.c. Range 14" - 30" w.c. Spring Part No. 1D8933 000A2 (Dark Green) Droop 3" w.c.	1 2 5 13 25 60 100 125	300 500 900 1500 2100 4400 7000 7000	500 950 1700 3200 4700 7750 7750 7750	750 1400 2500 5400 7750 7750 7750	1000 2000 4200 6500 7750 7750	1300 2800 5000 7750 7750	1700 3100 5500 7750	300 500 900 1500 2300 4400 7000 7000	500 950 1700 3200 4800 9500 10000 10000	750 1400 2500 5500 9000 10000 10000	1000 2000 5300 9500 10000 10000	1300 3000 5600 10000 10000	1700 3500 6500 10000
Setting 1 psig* Range 1 - 2 psig Spring Part No. 1H9758 27032 (Dark Blue) Droop 0.2 psi	2 6 14 30 60 100 125	500 1100 1600 2400 4300 6800 6800	750 1800 3200 5300 9200 10000 10000	1100 2600 5000 7750 10000 10000	1400 4100 6600 8000 10000	2400 5500 8000 9500	2800 5800	500 1100 1600 2400 4400 7000 7000	750 1800 3200 5400 9000 13000 13000	1100 2600 5000 9200 15000 15000	1400 4200 8000 15000 15000	2400 6200 10000 15000	3000 7500 12000
Setting 3 psig* Range† 1-1/2 - 3-1/4 psig Spring Part No. 1H9759 27032 (Orange) Droop 0.6 psi	3 7 14 30 60 100 125	500 1000 1500 2400 4300 6800 6800	1000 2200 3000 5100 9200 10000 10000	1500 3500 5800 9000 12000 12000	2000 5500 8000 10000 12000	3200 7500 10000 12000	3600 7600 12000	500 1000 1500 2400 4300 6800 6800	1000 2200 3000 5100 9000 14000 14000	1500 3500 6000 9500 16000 20000	2000 6000 11500 20000 20000	3200 8000 13500 20000	3600 8800 14000

*Requires special heavy diaphragm plate construction.
†1-1/2 to 2-1/4 psig range for Type S203
NOTE: The capacity figures printed in black indicate optimum regulator performance, assuming full size outlet plumbing. Figures printed in color are capacity at maximum inlet pressure for that seat ring, spring and body size combination.

North American
Mfg. Co.
Cleveland, OH 44105 USA

THREE-PIPE BLEEDER

BULLETIN 86.54
12-79 86.55

Series 8654 Bleeders assure constant gas/air proportioning on nozzle mix burners where maximum available gas pressure is less than the combustion blower air pressure. This three-pipe, aluminum-body bleeder permits constant gas/air ratio despite fluctuations in combustion chamber pressures.

Application. For any nozzle mixing burner system, where gas pressure at the regulator outlet is less than air pressure at the burner, pressure control systems fail to maintain gas/air ratios at higher air flow rates. It is necessary then to produce a pressure in the impulse line that is always less than but proportional to the pressure in the combustion air line. A bleeder in the impulse line between the combustion air line and the gas regulator permits a constant leak which reduces the air pressure impulse applied to the regulator to a proportionately lower value. The regulator outlet pressure will be less than, but proportional to, air line pressure over the entire range of firing rates.

Air/gas ratio changes due to combustion chamber pressure fluctuations are neutralized by connecting a third line from the bleeder to the combustion chamber (see piping sketch). This arrangement applies pressure variations to both sides of regulator control diaphragm.

Installation. Bleeders are required for nozzle mix systems wherever available gas pressure is less than the sum of combustion air pressure and gas pressure drop through the regulator (usually 2 osi or more for sufficient regulator capacity). Mount the bleeder to the air line, or as close as possible, 5 pipe diameters downstream, and at least 3 pipe diameters upstream, of any valve or fitting. Install the combustion chamber connection (when required) per the piping sketch below. Use ½" pipe or tubing, and keep its length to 10 feet or less to avoid excessive pressure drop.

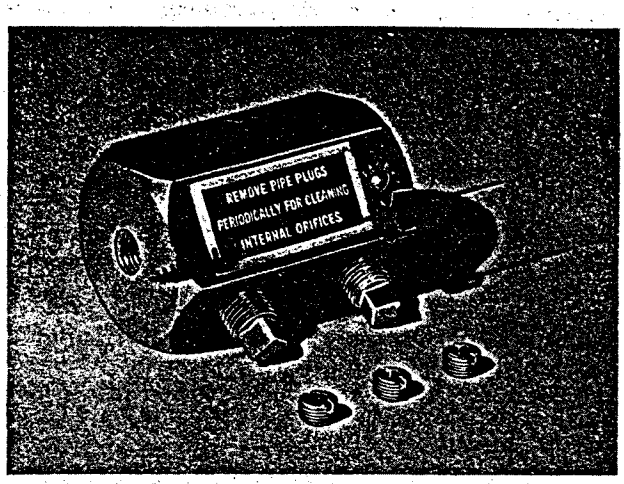

In **installations** with excessive dirt in the air, frequent cleaning is required. This is accomplished by brushing out all orifices. Clean-out plugs are provided in the opposite side of the bleeder body. The three-pipe Series 8654 Bleeder features a rust-proof aluminum body with interchangeable orifices and is furnished with an assortment of four orifice plugs. A convenient brush is provided for periodic orifice cleaning.

Where disassembly and cleaning of bleeders is not desirable, 8655 Bleeder-Filters can be substituted. Each unit consists of an 8654 Bleeder assembled to an 8647-01 Filter. Filter elements must be replaced regularly—dust accumulation increases their flow resistance, causing a decrease in impulse pressure to the regulator and lean operation of the burner. To avoid unnecessary delays in replacing elements, keep an adequate supply of spare filter elements on hand (PN2-4920-1).

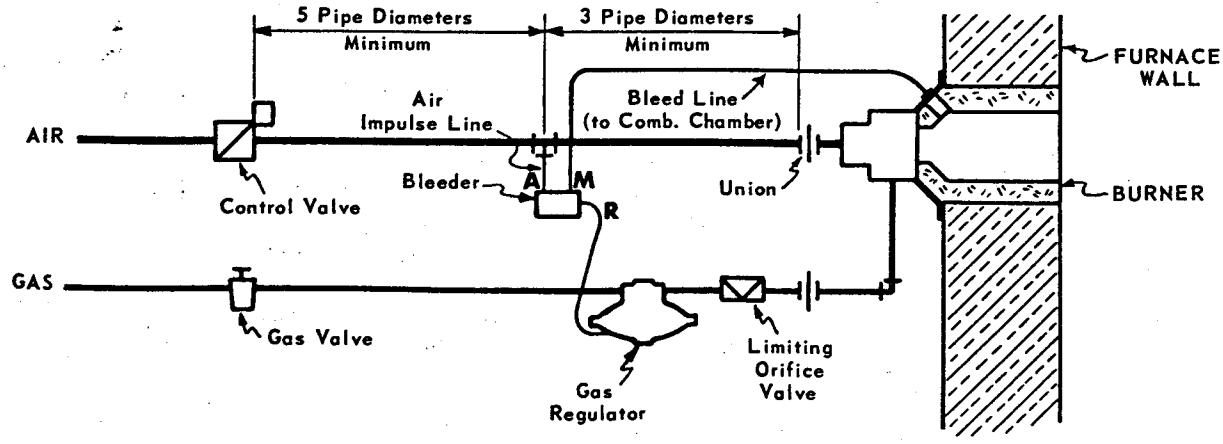

(over)

Selection. Choose a bleed orifice for an installation having 14 osi air pressure at the burner at high fire rate and 6½ osi gas pressure at the regulator inlet.

Allowing 2 osi pressure drop through the air/gas ratio regulator for required capacity, available gas pressure at the regulator outlet will be 4½ osi. 14 osi air impulse must then be bled to match 4½ osi gas or 4½ ÷ 14 = 32% air pressure required as regulator impulse. Since there is no standard 32% orifice bleed plug, use the 30% plug. When no orifice plug is available to permit exact matching of impulse and gas pressures, always choose an orifice that will provide an impulse pressure slightly lower than available gas pressure in order to have control throughout the entire range of firing rates.

If air and gas pressures are not known, find correct bleed orifice plug through trial and error as follows: Light the burner, bring it to high fire and adjust the limiting orifice valve for correct air/gas ratio. Then, starting with the smallest orifice plug, continue inserting plugs into the "M" opening using successively larger orifices (with correspondingly smaller % air impulse), until the flame indicates a drop in gas flow. Readjust the limiting orifice valve for correct air/gas ratio. The burner will then have its correct air/gas ratio for all firing rates.

	% Air Pressure desired as Impulse	Orifice Drill Size	Part Number
Standard	10	# 8	OA2-401-1
	30	25	OA2-401-2
	57	32	OA2-401-3
Special	15	15	
	20	19	
	40	29	
	70	38	
	82	44	

The user can make one of these orifices by drilling the blank plug included with each bleeder or by enlarging one of the 3 standard orifices (listed above) shipped with the bleeder. Orifice plugs should be drilled from the end opposite slot. Remove all burrs and insert plug so slotted surface is about ½" below bleeder body surface.

DIMENSIONS in Inches (and mm)

8654 Bleeder
Wt. 1 lb (0.45 kg)

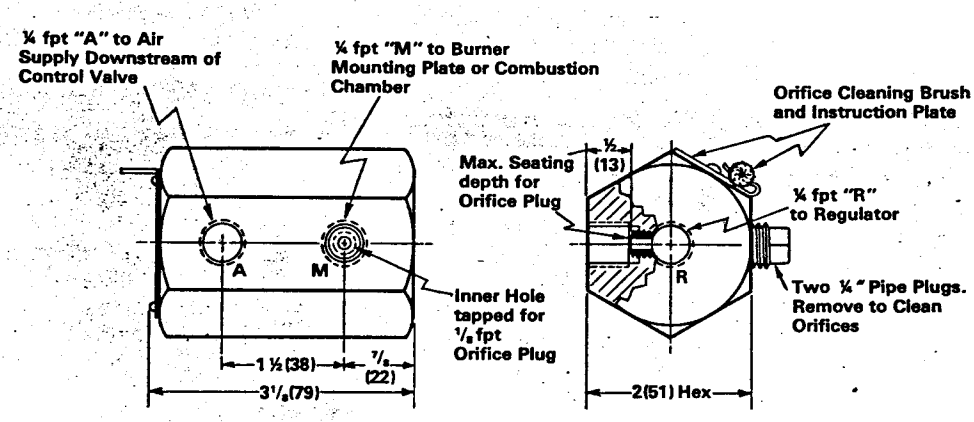

Metric Conversions

1 ft = 0.3048 m
1 osi = 0.004 39 kg/cm²
= 43.94 mm H_2O

8655 Bleeder-Filter
Wt. 2 lb (0.9 kg)

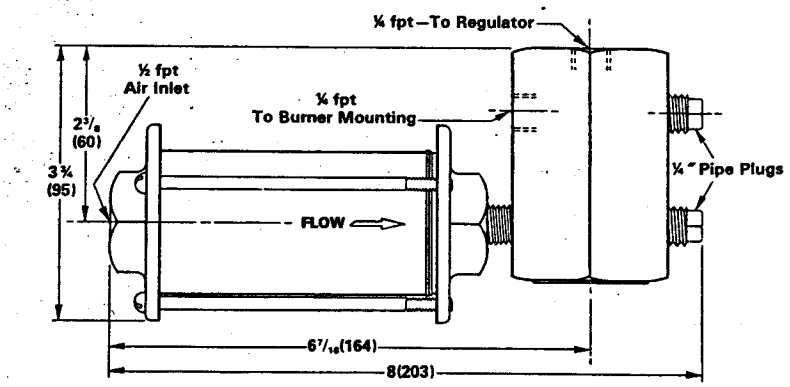

Order Must Specify: "8654 Bleeder", or "8655 Bleeder-Filter"
For specially drilled orifice plug, specify: "Special Orifice Plug for 8654, drill #____"

NAI270-88654/8655-6000/7100

PRINTED IN U.S.A.

otherwise about the ID of the tubing selected in step 6 above). Remove burrs from the inside. To minimize turbulence effects, locate the connection on the air line at least 5 air pipe diameters downstream and 3 diameters upstream of any valve or fitting. If it is absolutely necessary to locate the connection less than 5 diameters downstream of the control valve, the hole should be drilled so that the drill is parallel to the shaft of the valve.

INSTALLATION FOR PREMIX BURNERS

1. For an open type premix burner, remove the thread protection cap from the vent and connect as shown in Figure 1. If the vent is piped outdoors, protect the end of the vent pipe from air currents, water, and dirt.
2. For a sealed-in type premix burner the vent of the Series 7218 Atmospheric Regulator should be cross-connected to the combustion chamber to correct the regulator action for any differences between furnace and atmospheric pressure. When one regulator is used for each burner, connect the vent through the burner mounting plate (as in Figure 2) or to the combustion area.

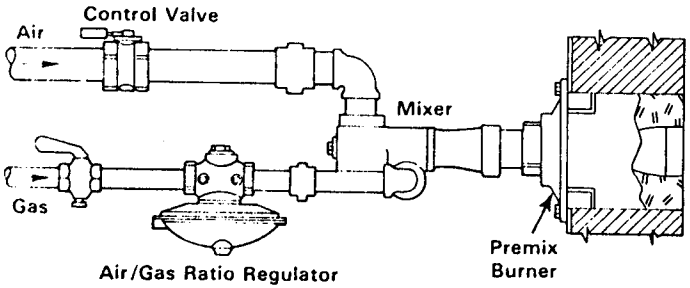

Figure 1

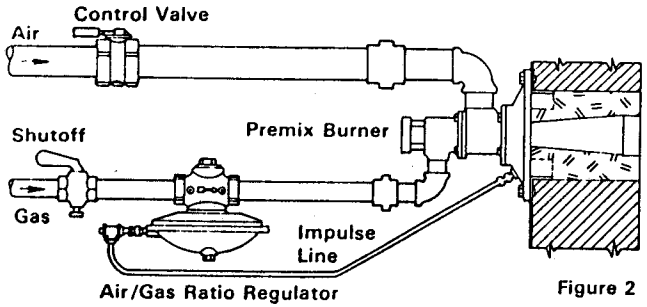

Figure 2

INSTALLATION FOR NOZZLE-MIX BURNERS

1. Install a limiting orifice valve between the regulator and burner.
2. If the minimum gas inlet pressure exceeds the maximum air pressure by 2 or more osi, simply cross-connect the regulator's vent to the main air line downstream of the control valve, as in Figure 3.

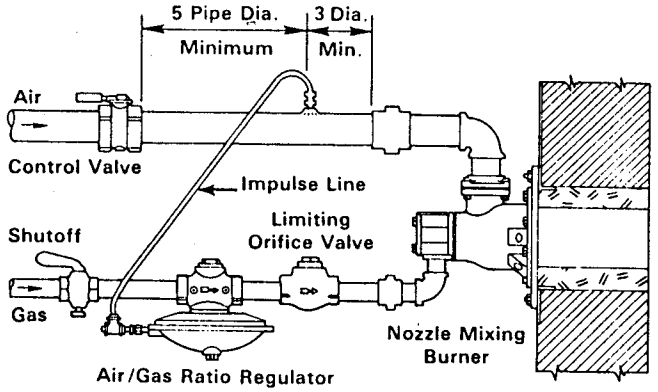

Figure 3

3. If the minimum gas pressure at the regulator inlet is not at least 2 osi more than the maximum air pressure available at the burner, then a bleeder must be installed in the air pressure impulse line, as shown in Figure 4, with the amount of bleed set so that maximum impulse pressure is 2 osi less than the gas inlet pressure. (See the Bleeder Bulletin.) This arrangement should be used only when combustion chamber pressures are atmospheric (open burner).
4. If gas and air pressure are not known, make a "trial and error" setting of the bleeder by lighting the burner and bringing it to high fire as described in step 3. Then successively reduce the impulse to the regulator by means of a bleed until you find a bleeder setting that produces an effect on the flame. This is the correct bleeder setting for all firing rates. Readjust the limiting orifice gas valve. (If gas pressure is not constant set the bleeder for the next lower impulse pressure.)

ratio is found. Replace the cover plug. The regulator is then adjusted for atomizing air plus main air at any firing rate, and the burner will have the same capacity when operating on gas as on oil. (If the burner cannot be lighted on atomizing air only, adjust the spring adjusting plug with the main air at low fire setting.)

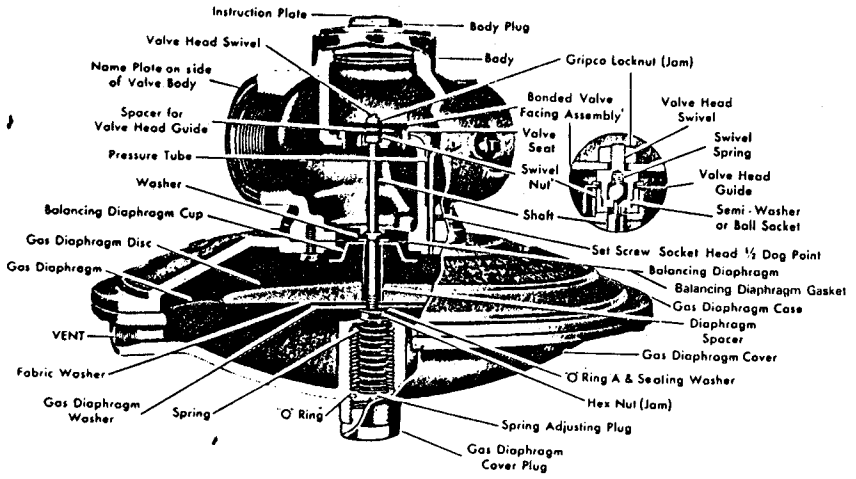

SERVICING

To check regulator operation, ⅛" pipe taps are provided on the body for inlet and outlet pressure readings.

Failure to Shut Off Tightly

1. If tight shutoff is desired but not obtained, first make sure that regulator has been adjusted for tight shutoff (Step 4 under Lighting And Adjustment).
2. Next remove air impulse connection to make sure there is no impulse during off period.
3. Attach a water gauge to the outlet test tap to show possible suction from furnace draft. To correct for this, cross-connect the regulator's vent to the combustion chamber as shown in Figure 2 or 5 on previous pages.
4. Shut off gas supply, remove body plug, apply air impulse (about 16 osi) to the vent to raise regulator valve off seat, wipe seat surfaces with cloth to remove possible pipe scale, dirt, pipe thread chips, or other foreign matter. Remove the air impulse and replace the body plug.

NOZZLE-MIX SYSTEMS

5. Shut off gas supply, remove body plug and inlet test tap plug. While pressing gently downward on regulator valve, attempt to blow through a rubber tube attached to the inlet test tap. If back pressure does not build up, the balancing diaphragm is ruptured and must be replaced. (As an alternate test, try to wobble the regulator valve with a finger. If the balancing diaphragm is intact it will hold the valve fairly rigid.)

Regulator Not Responsive

1. Make sure thread protection cap is removed from vent. If impulse line is used, make sure it is not clogged, undersized, or inoperative due to bad installation.
2. Make sure of mixer suction by shutting off gas supply and reading water gauge attached to outlet test tap while air flows through the mixer. If impulse line is used, disconnect from regulator vent and attach it to water gauge to observe impulse magnitude and changes.
3. If suction or impulse is satisfactory but regulator still is not responsive, shut off gas supply, remove outlet test plug, connect rubber tube to regulator vent and blow through tube. If pressure does not build up in the tube, the gas diaphragm is ruptured and must be replaced.

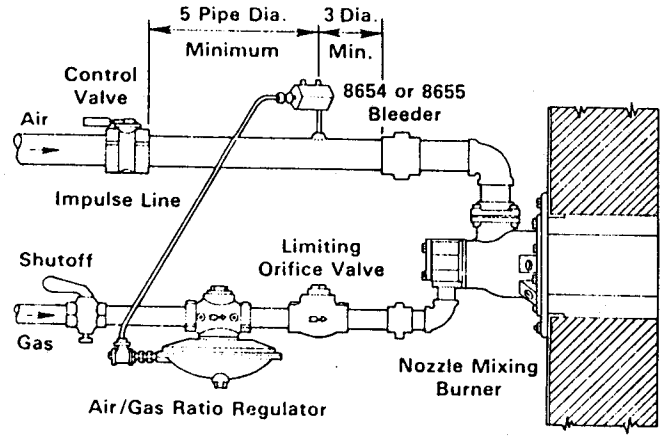

Figure 4

5. If the combustion chamber pressure fluctuates or is not atmospheric (sealed-in burners) and if gas pressure is less than air pressure, use a 3-pipe bleeder, as shown in Figure 5; this arrangement bleeds off a portion of the air impulse pressure to the combustion chamber so that fluctuations in combustion chamber pressure are neutralized by being applied to both sides of the controlling diaphragm in the gas regulator.

Note: A 3-pipe bleeder can be used as a 2-pipe bleeder when the combustion chamber is at atmospheric pressure. In this case the piping connection to the combustion chamber can be omitted.

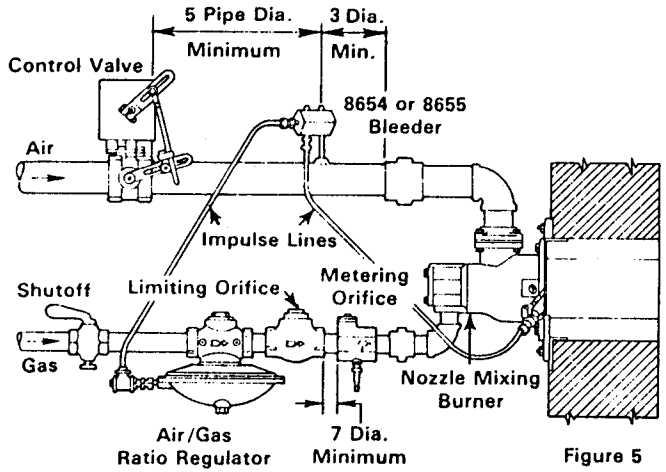

Figure 5

LIGHTING AND ADJUSTMENT

1. **Light the burner.** Follow the blower instructions to start the blower. All gas lines up to the 7218 Regulators must be purged. Follow the pilot instructions to light the pilot. Set the main air valve at the low fire position (1 or 2 osi air pressure). Open the limiting orifice gas valve 6 to 6½ turns. Open the upstream gas valve(s). If the burner does not light in a few seconds, close the nearest upstream gas shutoff valve to prevent accumulation of unburned gas, purge the chamber for a few minutes, and then open the limiting orifice gas valve a few more turns and reopen the gas shutoff valve. Repeat this procedure until the main flame lights.

2. **Adjust the high fire air/gas ratio.** Slowly turn the air valve to high fire position while adjusting the limiting orifice gas valve as needed to maintain the desired air/gas ratio. Replace the limiting orifice valve cover.

3. (For 7218 only, not 7216.) **Adjust the low fire air/gas ratio** only after step 2 is completed. Turn the air valve to low fire position. Remove the gas diaphragm cover plug on the bottom of the regulator. Use a screwdriver to turn the spring adjusting plug clockwise for more gas or counterclockwise for less gas to obtain the desired air/gas ratio. Replace the gas diaphragm cover plug.

4. (For 7218 only, not 7216.) **On-Off Control.** Set the regulator for tight shutoff by following the procedure in step 3, turning spring adjusting plug counterclockwise until spring compression is relaxed. (The soft seat has good lock-up characteristics under zero impulse pressure. However for extended periods of time at no flow conditions an approved shutoff valve should be used to prevent fuel leakage.)

5. **Dual-Fuel Burners.** When a nozzle-mix burner of the dual-fuel type is being operated on gas with atomizing air left on, the regulator must supply a constant amount of gas to match the atomizing air, plus a varying amount to match the main air at any firing rate. To adjust the regulator for this situation, first operate on main air only and follow the instructions under nozzle mix burners for making the cross-connection, adjusting the limiting orifice gas valve, and adjusting the bleed if any is required.

   Next turn off the main air (the flame will go out), and remove the gas diaphragm cover plug. Turn on the atomizing air at the pressure suggested for gas operation and screw the spring adjusting plug clockwise until the pilot relights the burner and the desired air/gas

Ref: Bulletin 40.15, Supplement 40.15-2

Atmospheric Pilot Regulators

"Zero gas" pilot systems require an atmospheric regulator to supply gas at zero gauge pressure to the pilot mixer. 7348-01 and 7218 Regulators perform this function. The 7348-01 is suited for single pilot installations; for multiple tips manifolded off a common mixer, use the larger 7218 Regulators.

If inlet gas pressure exceeds 8 osi to the 7348-01 or 2 psi to the 7218, use a pressure reducing regulator upstream. Series 7344 Regulators reduce up to 25 psi gas to 4-12"wc—see page 2.

For capacities or inlet pressures beyond the range of 7344 Regulators, see Bulletins 73.37 and 73.49.

7348-01

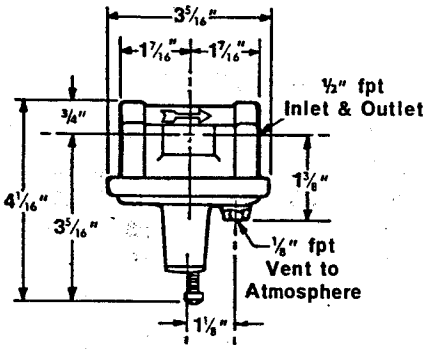

Weight 0.6 lb

Maximum Inlet Pressure: 8 osi
Outlet Pressure Range: −0.5"wc to +4.0"wc
Gases: Natural, LP, LP gas-air
Maximum Ambient Temperature: 200 F
Maximum Emergency Inlet Pressure: 2.5 psi
Installation Position: Horizontal run of pipe, spring cartridge down

Pressure Drop across Regulator, "wc	0.1	0.2	0.3
Capacity, cfh of 0.6 gravity gas	87	122	150 ①

① Maximum recommended capacity regardless of pressure drop.

7218

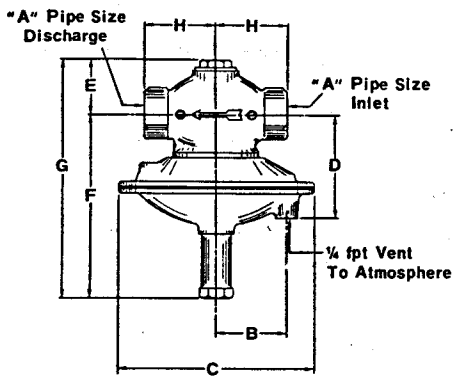

Maximum Inlet Pressure: 2 psi
Outlet Pressure Range: −1"wc to +1"wc
Gases: Natural, LP, LP gas-air
Maximum Ambient Temperature: 180 F
Maximum Shock Load: 4 psi
Installation Position: Horizontal Run of pipe, diaphragm below pipe

Regulator Designation	Dimensions in inches A	B	C	D	E	F	G	H	Wt, lb
7218-0	3/4	2 11/32	7 1/2	3 15/16	1 7/8	6 7/8	8 3/4	2 1/2	8
7218-1	1	2 11/32	7 1/2	3 15/16	2 1/16	6 7/8	8 15/16	2 3/4	8

Pressure Drop across Regulator, osi		1	2	2.5	3	4	6	8	10	12
Capacity, cfh of 0.6 gravity gas	7218-0	176	250	280	305	352	433	500	560	612
	7218-1	282	400	448	488	564	692	800	895	980

Gas Gravity Correction Factors – For a gas gravity different from 0.6 multiply the regulator capacity by the appropriate gravity factor.

Gas gravity	0.4	0.6	0.8	1.5	2.0
Gravity factor	1.22	1.00	0.868	0.632	0.547

(over)

Metric Conversions
1" = 25.40 mm
1"wc = 25.40 mm H_2O
1 osi = 43.94 mm H_2O = 0.004 39 kg/cm²
200 F ≈ 95 C
180 F ≈ 85 C
1 psi = 0.0703 kg/cm² = 703.1 mm H_2O
1 cfh = 0.028 32 m³/h
1 lb = 0.4536 kg

Pressure Reducing Regulators

7344-01 & -1

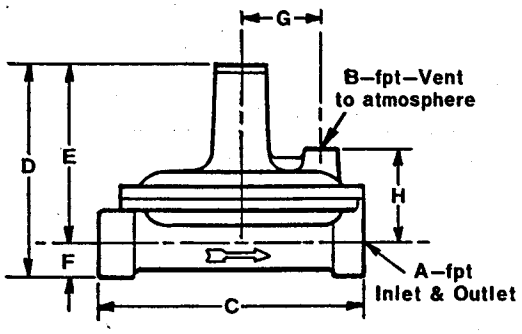

Maximum Inlet Pressure: 25 psi
Outlet Pressure Range: 4"wc to 12"wc
Gases: Natural, LP, LP gas-air
Maximum Ambient Temperature: 200 F
Maximum Emergency Inlet Pressure: 65 psi
Installation Position: Any position

Regulator Designation	Dimensions in inches A	B	C	D	E	F	G	H	Wt, lb
7344-01	½	⅛	4⅛	3½	2⅞	⅝	1¼	1½	¾
7344-1	1	⅜	5⅞	5¼	4 5/16	15/16	1¾	2½	1½

Capacity, cfh of 0.6 gravity gas		7344-01 Inlet Pressure, psi 0.5	1	2	5	10	25	7344-1 Inlet Pressure, psi 0.5	1	2	5	10	25
Outlet Press., "wc	4.0	180	273	384	428	360	—	400	495	560	674	660	530
	6.0	155	243	310	392	340	290	300	420	550	625	620	496
	8.0	122	212	263	310	288	275	200	300	395	500	480	590

Note: Regulator will not deliver 12"wc outlet pressure with less than 10 psi inlet pressure.

Gas Gravity Correction Factors

For a gas gravity different from 0.6, multiply the regulator capacity by the appropriate gravity factor.

Gas gravity	0.4	0.6	0.8	1.5	2.0
Gravity factor	1.22	1.00	0.868	0.632	0.547

SOLENOID VALVES 1485-01, 1485-02, and 1486-02

Solenoid Valve Number	1485-01 (½")	1485-02 (⅜")	1486-02 (⅜")
Capacity with 1"wc drop, 0.64 sp gr gas	201 cfh	65 cfh	55 cfh
Maximum pressure	6 psi	10 psi	100 psi
Weight	2 lb	¾ lb	1¼ lb

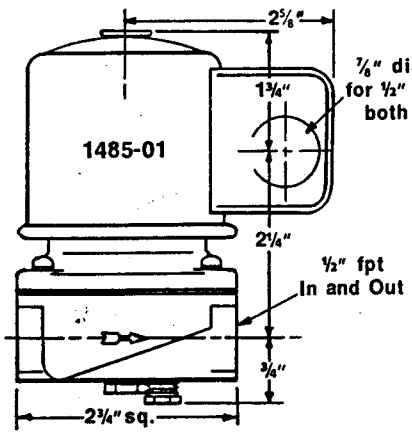

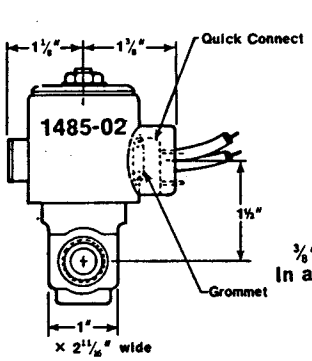

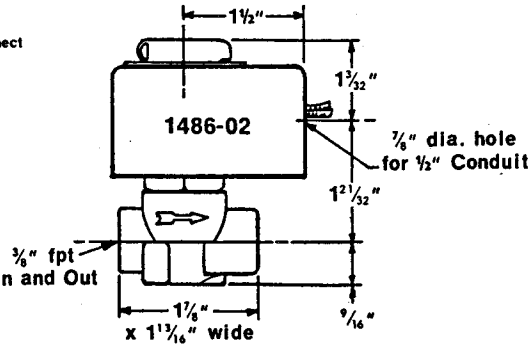

Specify electrical characteristics: 115/1/60 or 50, or 230/1/60 or 50

PRINTED IN U.S.A.

OPENING SIZE	ASSEMBL. NUMBER	A	B	C
41 x 31	40110-1	41"	67"	65"
51 x 31	40110-2	51"	77"	75"

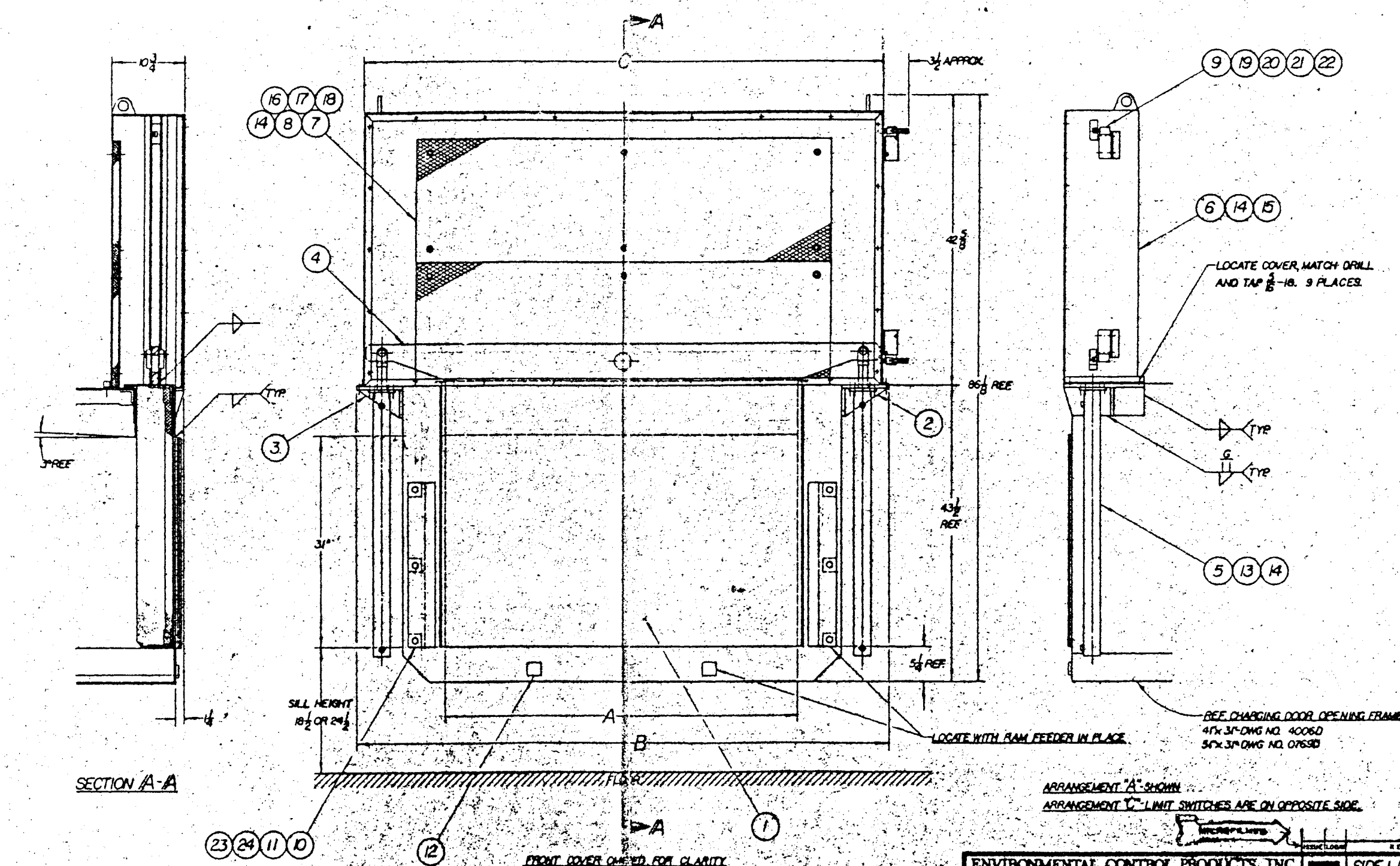

ARRANGEMENT "A" SHOWN

ARRANGEMENT "C" LIMIT SWITCHES ARE ON OPPOSITE SIDE.

MICROFILMED

ENVIRONMENTAL CONTROL PRODUCTS, INC. CHARLOTTE, NORTH CAROLINA				
DRAWING AND ALL INFORMATION CONTAINED HEREIN IS THE PROPERTY OF ENVIRONMENTAL CONTROL PRODUCTS, INC. AND MAY NOT BE DISCLOSED OR USED WITHOUT WRITTEN PERMISSION	MATERIAL SEE B.M.	TOLERANCE UNLESS OTHERWISE SPECIFIED	DWN. DCF	2-3-79
			CHK. [signature]	2/19/79
	FINISH		ENG.	

REVISION | ECO | DATE

SIDE LIFT HYDRAULIC CHARGING DOOR ASS'Y

41"x 31" AND 51"x 31"

OPENING SIZE	ASSEMBL. NUMBER	A	B	C
41 x 31	4011D-1	41"	67"	65"
51 x 31	4011D-2	51"	77"	75"

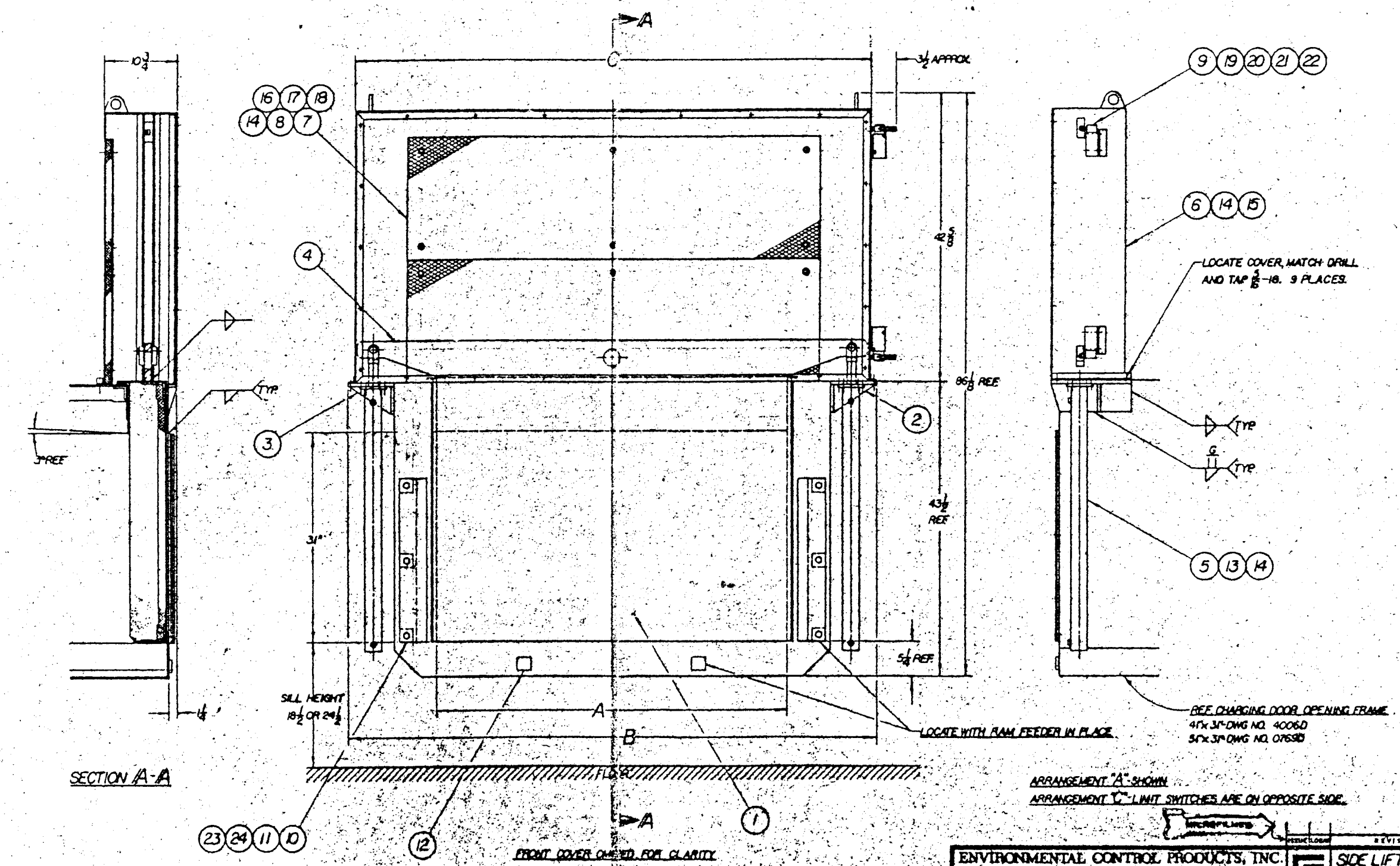

ARRANGEMENT "A" SHOWN

ARRANGEMENT "C" LIMIT SWITCHES ARE ON OPPOSITE SIDE.

MICROFILMED

ISSUE	LOGO	REVISION	ECO	DATE

ENVIRONMENTAL CONTROL PRODUCTS, INC.
CHARLOTTE, NORTH CAROLINA

DRAWING AND ALL INFORMATION CONTAINED HEREIN IS THE PROPERTY OF ENVIRONMENTAL CONTROL PRODUCTS, INC. AND MAY NOT BE DISCLOSED OR USED WITHOUT WRITTEN PERMISSION

MATERIAL SEE B.M.

FINISH

TOLERANCE UNLESS OTHERWISE SPECIFIED

FRACT.

DWN. DCF 2-3-79

CHK. [signature] 2/19/79

ENG.

SIDE LIFT HYDRAULIC CHARGING DOOR ASS'Y
41"x 31" AND 51"x 31"

OPENING SIZE	ASSEMBL NUMBER	A	B	C
41 x 31	4011D-1	41"	67"	65"
51 x 31	4011D-2	51"	77"	75"

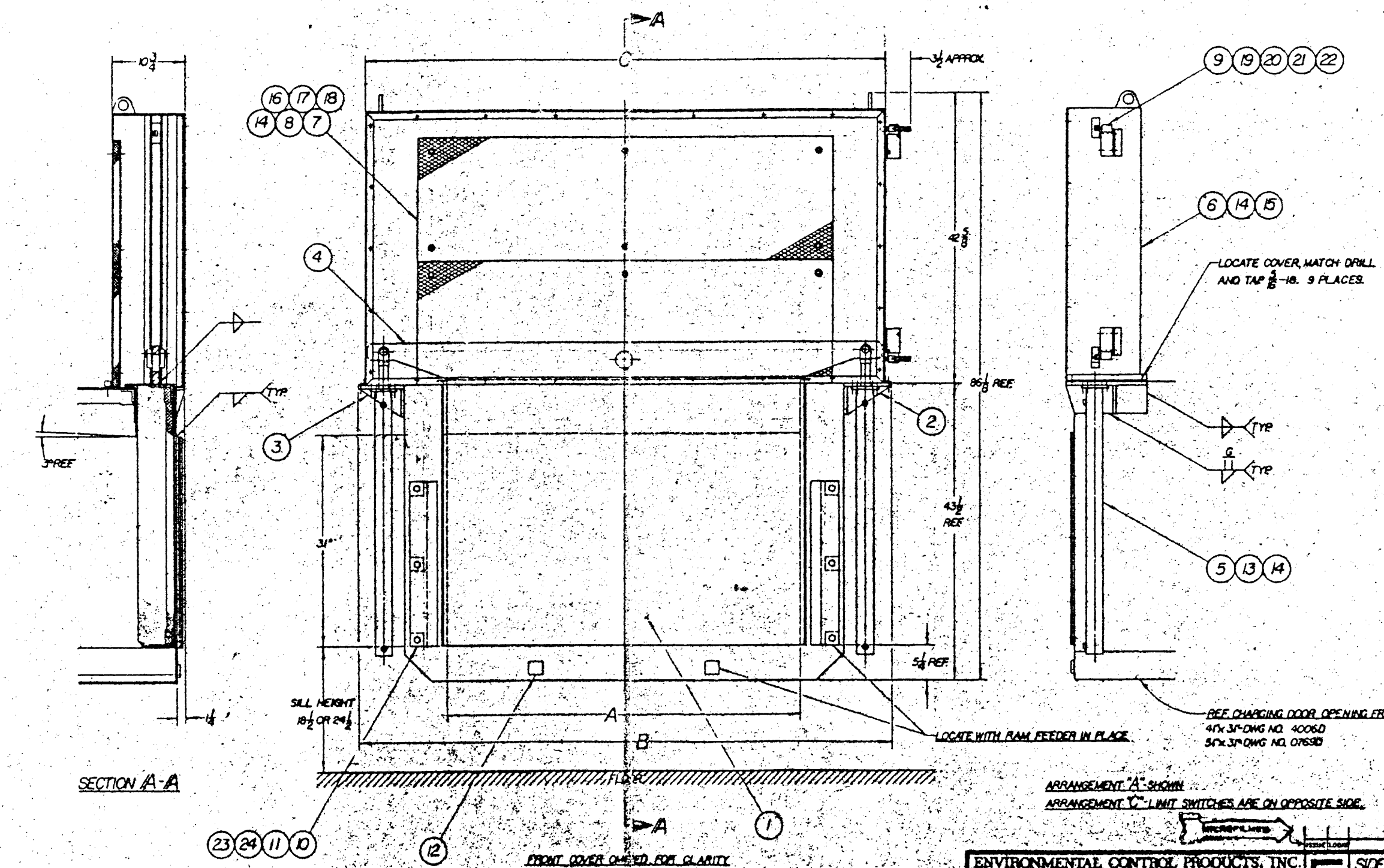

ARRANGEMENT "A" SHOWN

ARRANGEMENT "C" LIMIT SWITCHES ARE ON OPPOSITE SIDE.

ENVIRONMENTAL CONTROL PRODUCTS, INC. CHARLOTTE, NORTH CAROLINA				SIDE LIFT HYDRAULIC CHARGING DOOR ASS'Y 41"x 31" AND 51"x 31"
DRAWING AND ALL INFORMATION CONTAINED HEREIN IS THE PROPERTY OF ENVIRONMENTAL CONTROL PRODUCTS, INC. AND MAY NOT BE DISCLOSED OR USED WITHOUT WRITTEN PERMISSION	MATERIAL SEE B.M.	TOLERANCE	DWN. DCF 2-3-79	
			CHK. 2/13/79	

OPENING SIZE	ASSEMBL. NUMBER	A	B	C
41 x 31	40110-1	41"	67"	65"
51 x 31	40110-2	51"	77"	75"

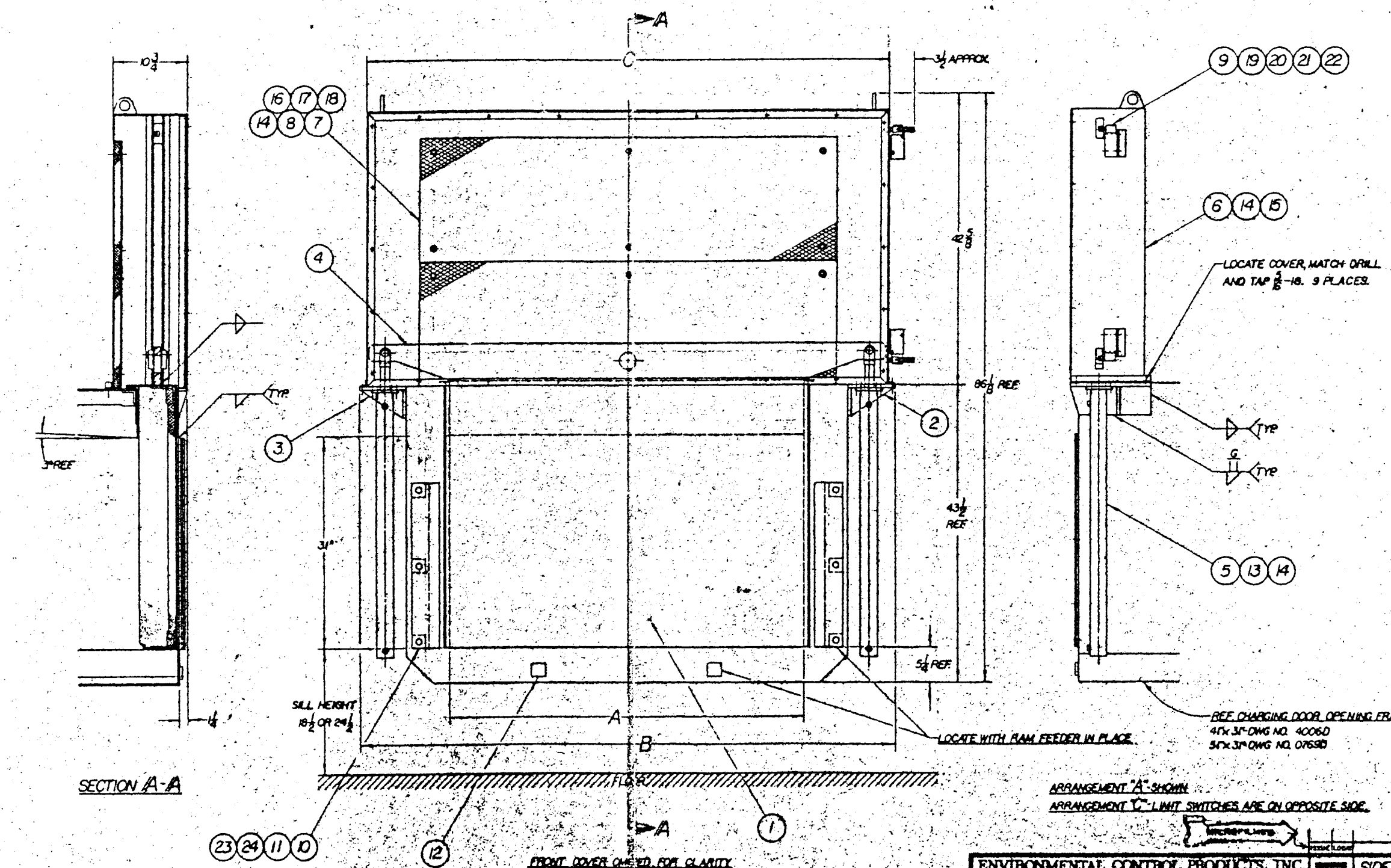

ARRANGEMENT "A" - SHOWN

ARRANGEMENT "C" - LIMIT SWITCHES ARE ON OPPOSITE SIDE.

ENVIRONMENTAL CONTROL PRODUCTS, INC. CHARLOTTE, NORTH CAROLINA					
DRAWING AND ALL INFORMATION CONTAINED HEREIN IS THE PROPERTY OF ENVIRONMENTAL CONTROL PRODUCTS, INC. AND MAY NOT BE DISCLOSED OR USED WITHOUT WRITTEN PERMISSION	MATERIAL SEE B.M.	TOLERANCE UNLESS NOTED OTHERWISE	DWN. DCF	2-3-79	SIDE LIFT HYDRAULIC CHARGING DOOR ASS'Y 41"x 31" AND 51"x 31"
	FINISH	FRACT.	CHK.	2/19/79	
			ENG.		

REVISION | ECO | DATE

OPENING SIZE	ASSEMBL. NUMBER	A	B	C
41 x 31	4011D-1	41"	67"	65"
51 x 31	4011D-2	51"	77"	75"

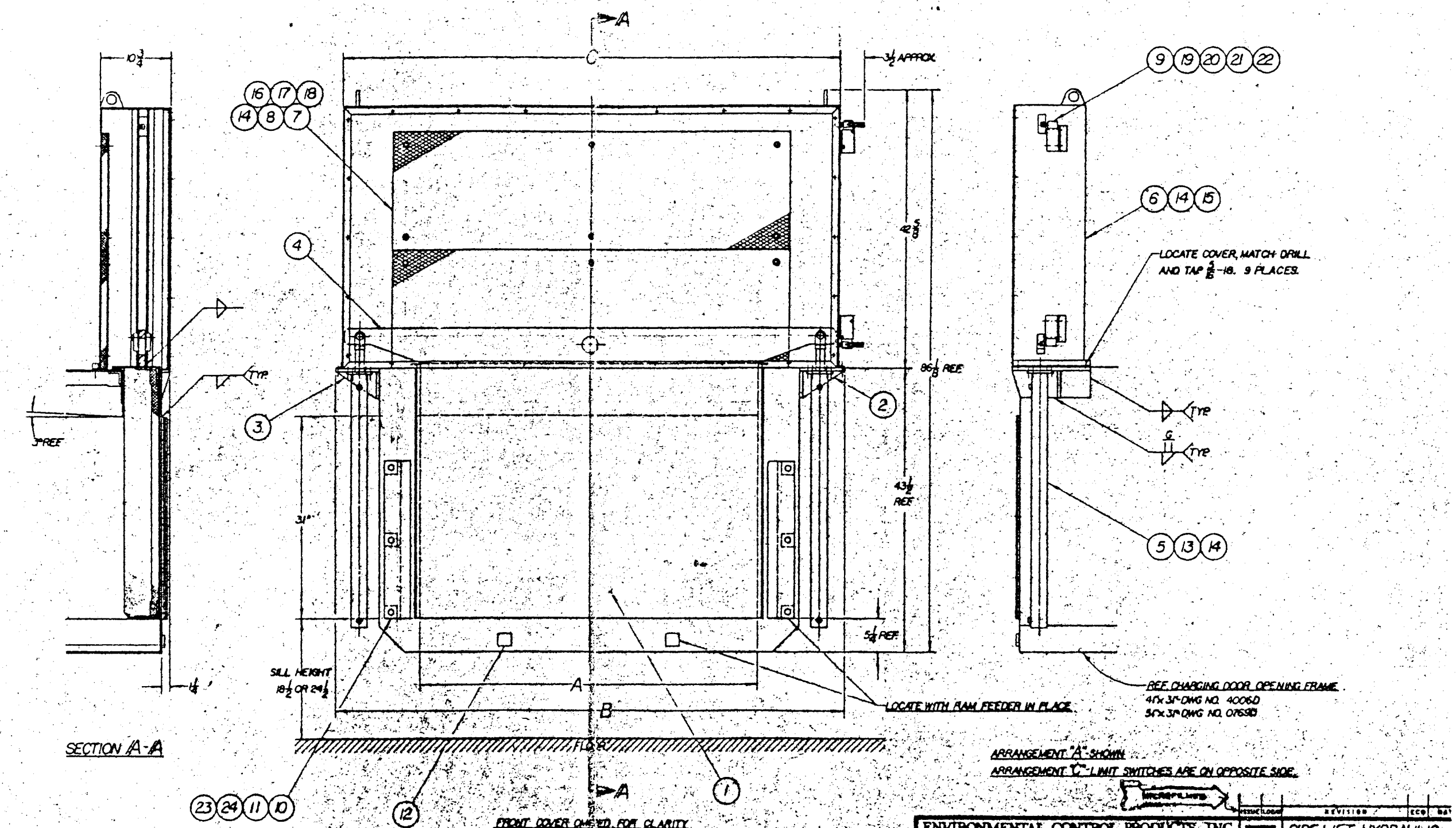

ARRANGEMENT "A" SHOWN

ARRANGEMENT "C" LIMIT SWITCHES ARE ON OPPOSITE SIDE.

ENVIRONMENTAL CONTROL PRODUCTS, INC.
CHARLOTTE, NORTH CAROLINA

DRAWING AND ALL INFORMATION CONTAINED HEREIN IS THE PROPERTY OF ENVIRONMENTAL CONTROL PRODUCTS, INC. AND MAY NOT BE DISCLOSED OR USED WITHOUT WRITTEN PERMISSION

MATERIAL: SEE B.M.

TOLERANCE UNLESS OTHERWISE SPECIFIED: FRACT.

DWN. DCF 2-3-79

CHK. 2/13/79

ENG.

REVISION | ECO | DATE

SIDE LIFT HYDRAULIC CHARGING DOOR ASS'Y
41"x31" AND 51"x31"

OPENING SIZE	ASSEMBL. NUMBER	A	B	C
41 x 31	40110-1	41"	67"	65"
51 x 31	40110-2	51"	77"	75"

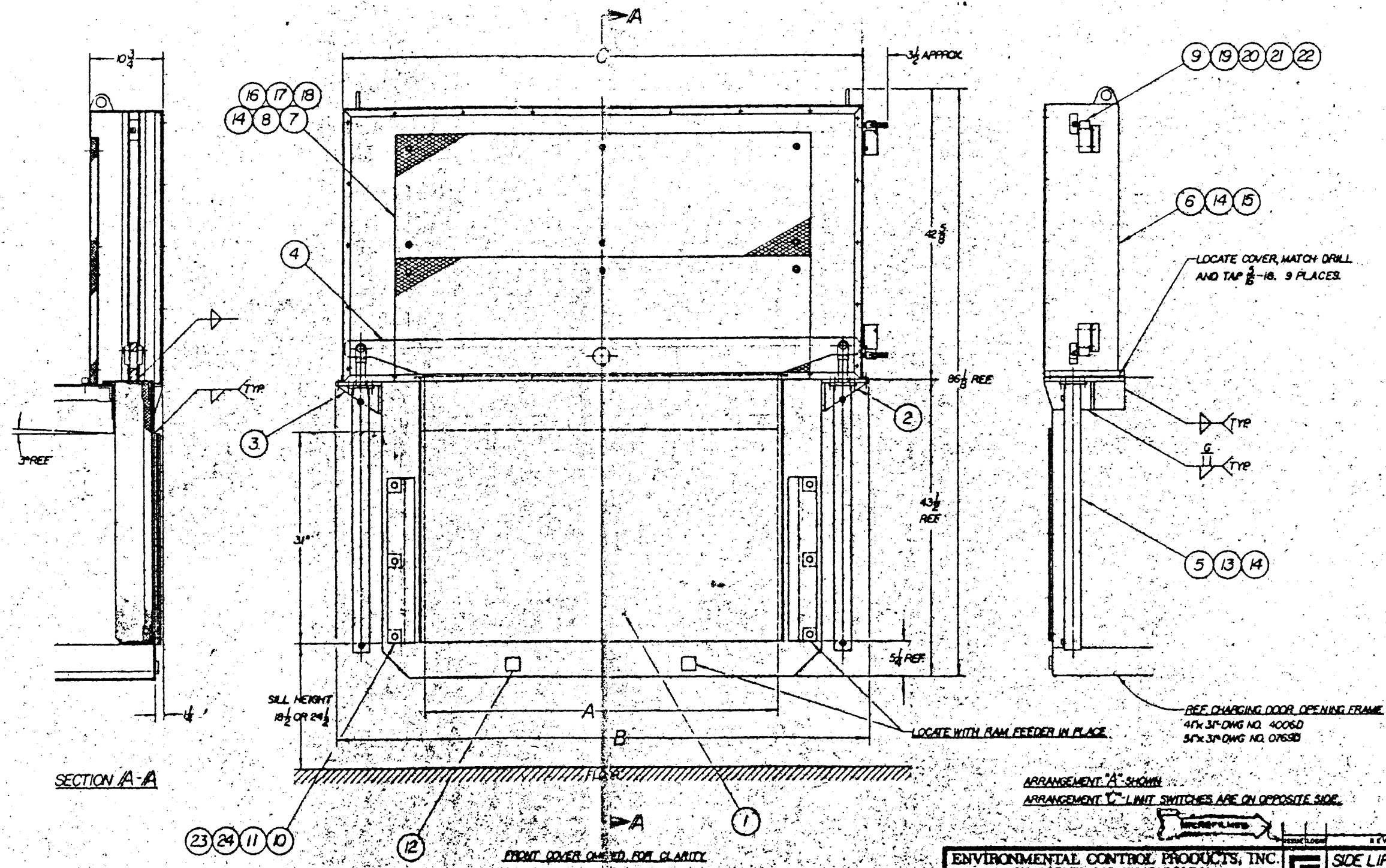

ENVIRONMENTAL CONTROL PRODUCTS, INC.
CHARLOTTE, NORTH CAROLINA

DRAWING AND ALL INFORMATION CONTAINED HEREIN IS THE PROPERTY OF ENVIRONMENTAL CONTROL PRODUCTS, INC. AND MAY NOT BE DISCLOSED OR USED WITHOUT WRITTEN PERMISSION

MATERIAL: SEE B.M.

FINISH

TOLERANCE UNLESS OTHERWISE SPECIFIED: FRACT.

DWN. DCF 2-3-79

CHK. 2/13/79

ENG.

REVISION

SIDE LIFT HYDRAULIC CHARGING DOOR ASS'Y
41"x 31" AND 51"x 31"

OPENING SIZE	ASSEMBL. NUMBER	A	B	C
41 x 31	40110-1	41"	67"	65"
51 x 31	40110-2	51"	77"	75"

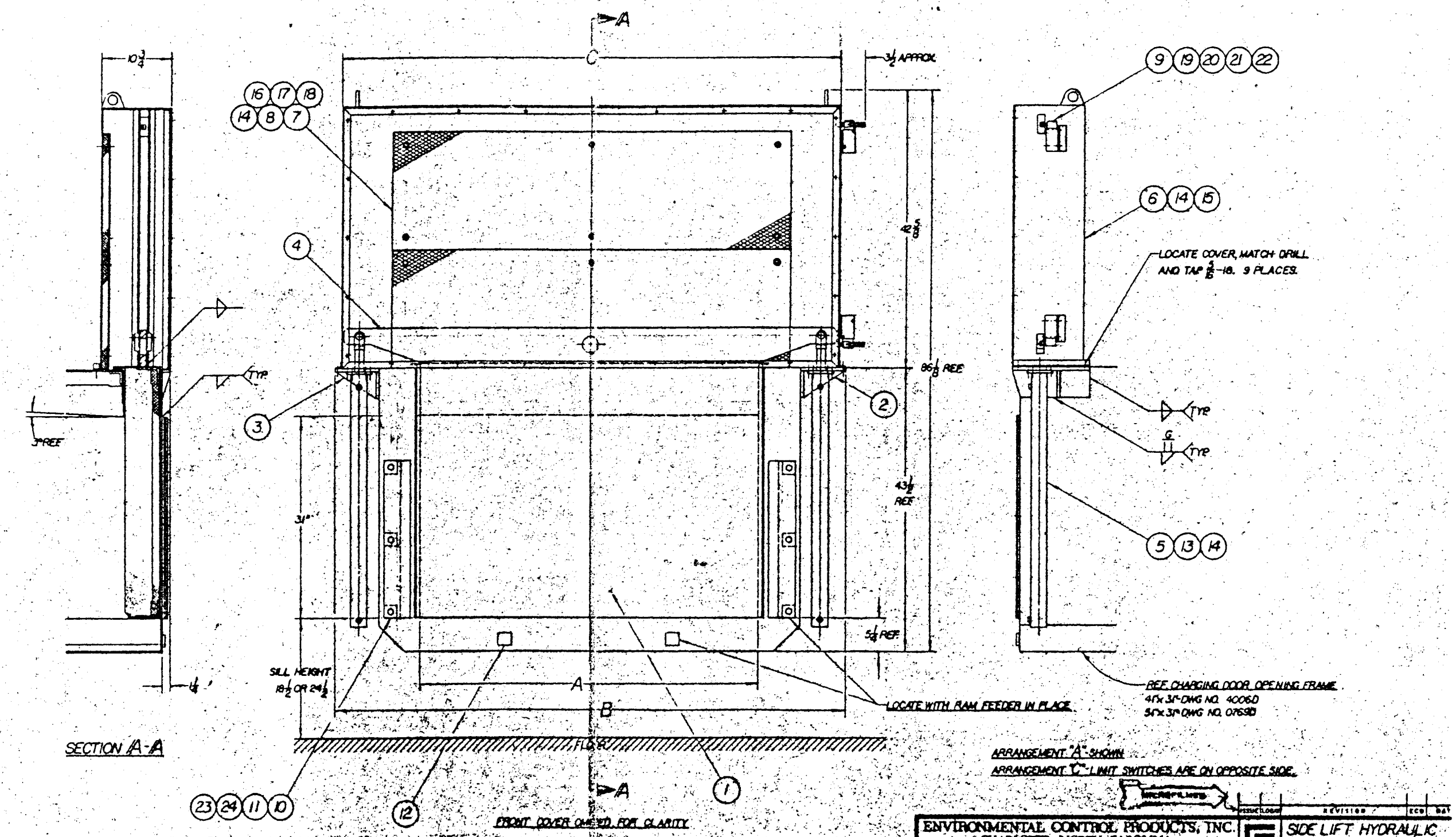

ENVIRONMENTAL CONTROL PRODUCTS, INC.
CHARLOTTE, NORTH CAROLINA

DRAWING AND ALL INFORMATION CONTAINED HEREIN IS THE PROPERTY OF ENVIRONMENTAL CONTROL PRODUCTS, INC. AND MAY NOT BE DISCLOSED OR USED WITHOUT WRITTEN PERMISSION

MATERIAL: SEE B.M.

FINISH

TOLERANCE UNLESS OTHERWISE SPECIFIED: FRACT. / SCALE

DWN. DCF 2-3-79
CHK. 2/13/79
ENG.
SCALE 1/16" = 1" (51"x 31")

REVISION | ECO | DATE

SIDE LIFT HYDRAULIC CHARGING DOOR ASS'Y
41"x 31" AND 51"x 31"

ART NO.	MODEL NO	SILL HEIGHT	A	B	C	D	E	F	G	H	J	K	L	M	N	P	R	S	
9520-221	SR-22H	18 1/2	40"	34 1/8	17 1/16	18 3/4	57 5/8	39 7/8	24 3/8	44"	72 5/8	47 1/8	50 1/8	141 5/8	34 3/4	87 1/2	55 1/2	43 5/8	A
9520-222	SR-22H	24 1/2				24 3/4	63 5/8									93 1/2		49 5/8	
9520-281	SR-28H	18 1/2	40"	34 1/8	17 1/16	18 3/4	63 5/8	39 7/8	30 3/8	44"	72 5/8	47 1/8	50 1/8	141 5/8	34 3/4	93 1/2	55 1/2	49 5/8	A
9520-282	SR-28H	24 1/2				24 3/4	69 5/8									99 1/2		55 5/8	
9520-371	SR-37H	18 1/2	50"	48 1/8	24 1/16	18 3/4	57 5/8	53 7/8	24 3/8	54"	75 7/8	61 1/8	64 1/8	A 156"	41 3/4	101 1/2	A 69 1/2	43 5/8	
9520-372	SR-37H	24 1/2				24 3/4	63 5/8									107 1/2		49 5/8	
9520-431	SR-43H	18 1/2	50"	44 1/8	22 1/16	18 3/4	63 5/8	49 7/8	30 3/8	54"	76 7/8	57 1/8	60 1/8	156"	39 3/4	103 1/2	65 1/2	49 5/8	B
9520-432	SR-43H	24 1/2				24 3/4	69 5/8									109 1/2		55 5/8	B

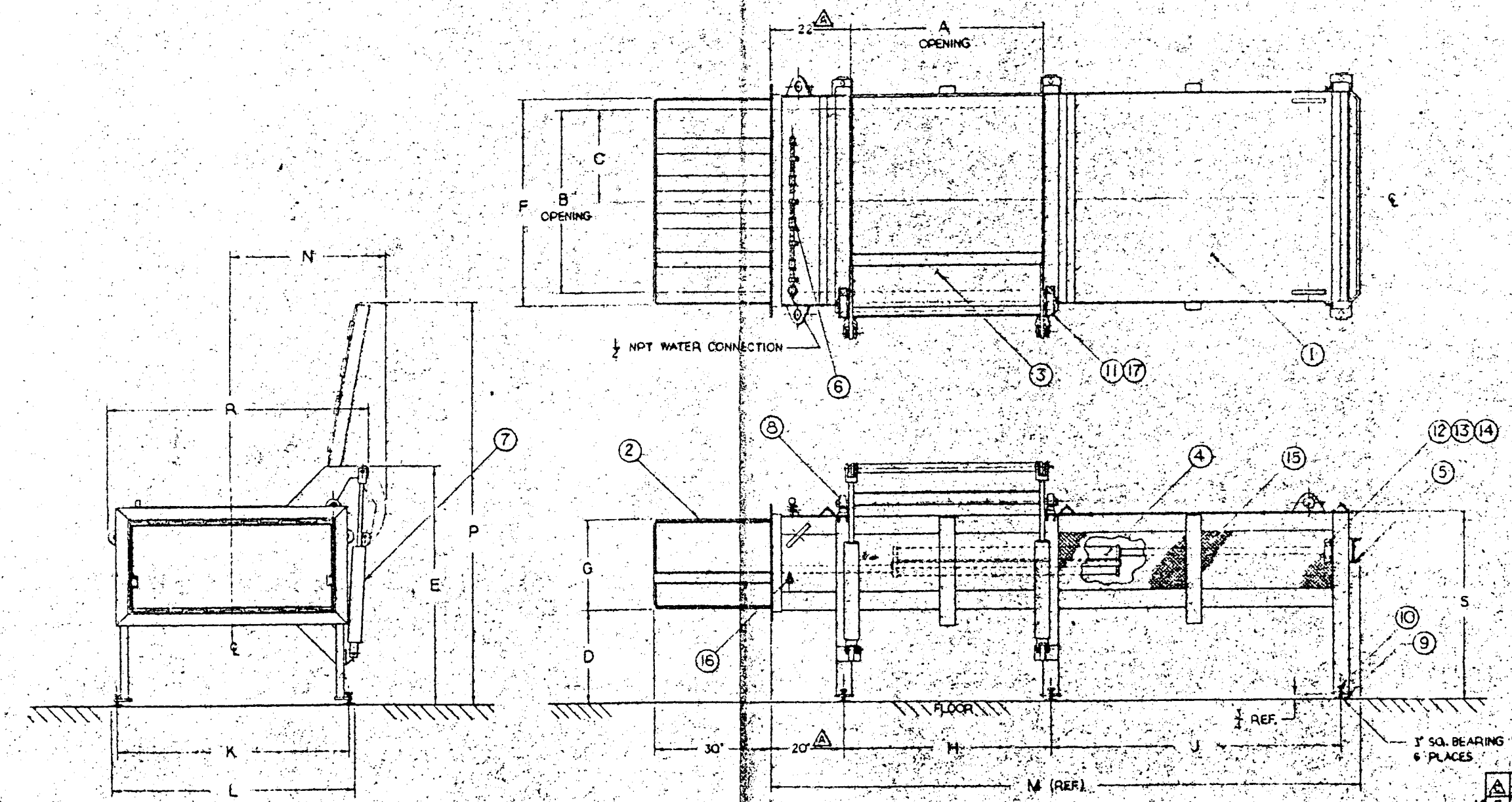

ARRANGEMENT "C" SHOWN.
ARRANGEMENT "B" OPP. HAND

A		ADDED 49520-221 THRU 49520-282	JOB	4-7-81
B	JCS	ADDED 49520-43H 49520-432		1-16-80
A	JCS	69-1/2 WAS 69-1/2, 22 WAS 22-1/4, 156 WAS 156-1/4, 20 WAS 20-1/4		1-16-80
ISSUE	LOCAL	REVISION	ECO	DATE

ENVIRONMENTAL CONTROL PRODUCTS, INC.
CHARLOTTE, NORTH CAROLINA

DRAWING AND ALL INFORMATION CONTAINED HEREIN IS THE PROPERTY OF ENVIRONMENTAL CONTROL PRODUCTS, INC. AND MAY NOT BE DISCLOSED OR USED WITHOUT WRITTEN PERMISSION

MATERIAL: SEE BM

FINISH

TOLERANCE UNLESS NOTED OTHERWISE

FRACT.

ANGLE

DWN. JCS 9-16-80
CHK. [illegible] 7-23-80
ENG.
SCALE 3/8" = 1'-0" (37)

FINAL ASSEMBLY
SR-22H, SR-28H, SR-37H
HYDRAULIC RAM FEEDER
18 1/2 OR 24 1/2 SILL HEIGHT
ARRANGEMENT "B" OR "C"

DWG. NO. 4952D-221 THRU SHT. 1

PART NO.	MODEL NO	SILL HEIGHT	A	B	C	D	E	F	G	H	J	K	L	M	N	P	R	S	
49520-221	SR-22H	18 1/2	40"	34 1/8	17 1/16	18 3/4	57 5/8	39 7/8	24 3/8	44"	72 5/8	47 1/8	50 1/8	141 5/8	34 3/4	87 1/2	55 1/2	43 5/8	A
49520-222	SR-22H	24 1/2				24 3/4	63 5/8									93 1/2		49 5/8	
49520-281	SR-28H	18 1/2	40"	34 1/8	17 1/16	18 3/4	63 5/8	39 7/8	30 3/8	44"	72 5/8	47 1/8	50 1/8	141 5/8	34 3/4	93 1/2	55 1/2	49 5/8	A
49520-282	SR-28H	24 1/2				24 3/4	69 5/8									99 1/2		55 5/8	
49520-371	SR-37H	18 1/2	50"	48 1/8	24 1/16	18 3/4	57 5/8	53 7/8	24 3/8	54"	76 7/8	61 1/8	64 1/8	A 156"	41 3/4	101 1/2	A 69 1/2	43 5/8	
49520-372	SR-37H	24 1/2				24 3/4	63 5/8									107 1/2		49 5/8	
49520-431	SR-43H	18 1/2	50"	44 1/8	22 1/16	18 3/4	63 5/8	49 7/8	30 3/8	54"	76 7/8	57 1/8	60 1/8	156"	39 3/4	103 1/2	65 1/2	49 5/8	B
49520-432	SR-43H	24 1/2				24 3/4	69 5/8									109 1/2		55 5/8	B

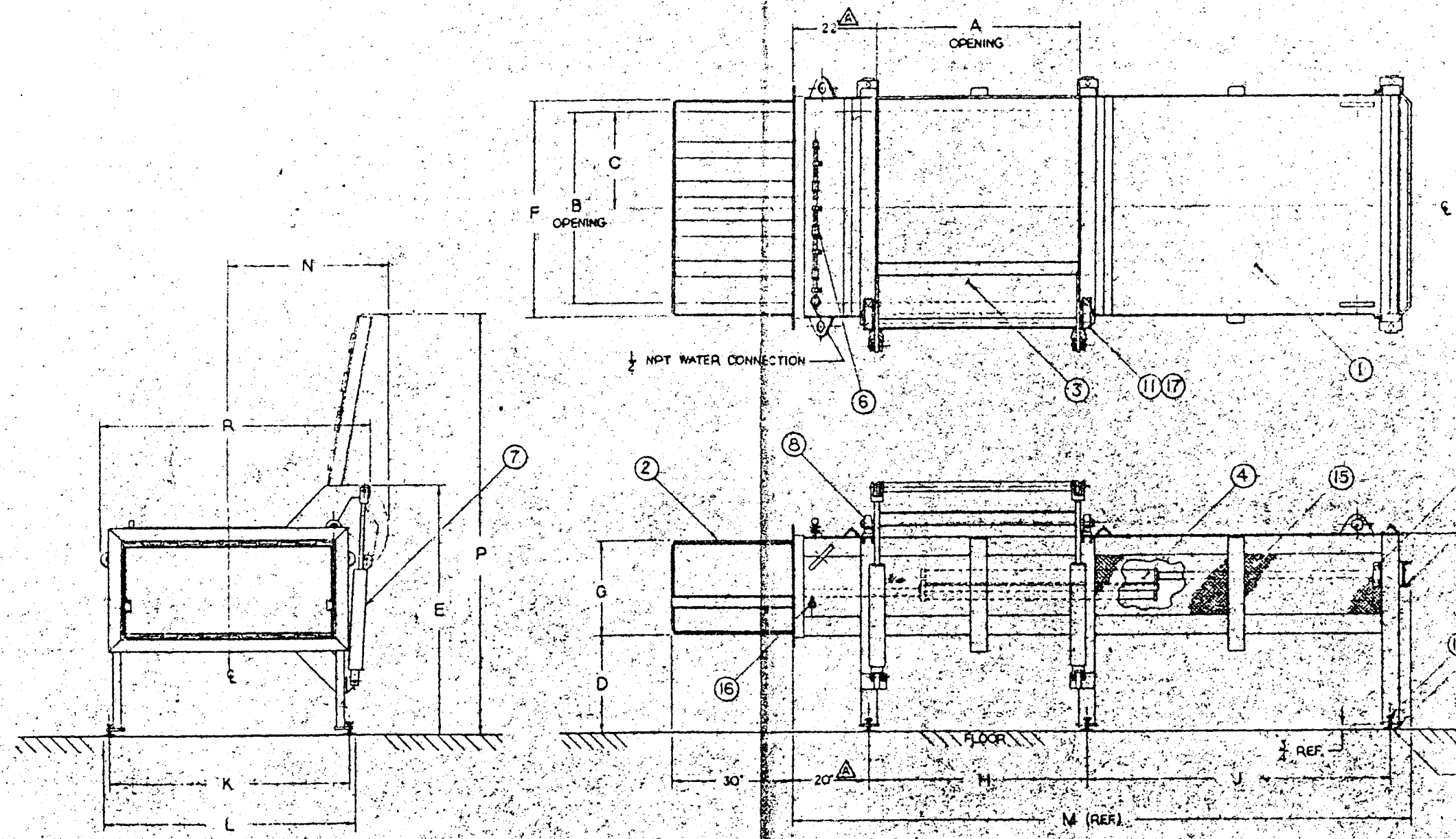

ARRANGEMENT "C" SHOWN.
ARRANGEMENT "B" OPP. HAND

A		ADDED 49520-221 THRU 49520-282	JCS	4-7-[illegible]
B	JCS	ADDED 49520-43H 49520-432		1-16-[illegible]
A	JCS	69 1/2 WAS 69 1/2, 22 WAS 22 1/4, 156 WAS 156 1/4, 20 WAS 20 1/4		1-16-[illegible]
MODEL	LOCAT	REVISION	ECO	DATE

ENVIRONMENTAL CONTROL PRODUCTS, INC.
CHARLOTTE, NORTH CAROLINA

DRAWING AND ALL INFORMATION CONTAINED HEREIN IS THE PROPERTY OF ENVIRONMENTAL CONTROL PRODUCTS, INC. AND MAY NOT BE DISCLOSED OR USED WITHOUT WRITTEN PERMISSION

MATERIAL: SEE BM
FINISH:
TOLERANCE UNLESS OTHERWISE SPECIFIED
FRACT.
DWN. JCS 9-16-80
CHK. [illegible] 9-23-80
ENG.

FINAL ASSEMBLY
SR-22H, SR-28H, SR-37H
HYDRAULIC RAM FEEDER
16 1/2 OR 24 1/2 SILL HEIGHT
ARRANGEMENT "B" OR "C"

PART NO.	MODEL NO	SILL HEIGHT	A	B	C	D	E	F	G	H	J	K	L	M	N	P	R	S	
49520-221	SR-22H	18 1/2	40"	34 1/8	17 1/16	18 3/4	57 5/8	39 7/8	24 3/8	44"	72 5/8	47 1/8	50 1/8	141 5/8	34 3/4	87 1/2	55 1/2	43 5/8	A
49520-222	SR-22H	24 1/2				24 3/4	63 5/8									93 1/2		49 5/8	
49520-281	SR-28H	18 1/2	40"	34 1/8	17 1/16	18 3/4	63 5/8	39 7/8	30 3/8	44"	72 5/8	47 1/8	50 1/8	141 5/8	34 3/4	93 1/2	55 1/2	49 5/8	A
49520-282	SR-28H	24 1/2				24 3/4	69 5/8									99 1/2		55 5/8	
49520-371	SR-37H	18 1/2	50"	48 1/8	24 1/16	18 3/4	57 5/8	53 7/8	24 3/8	54"	76 7/8	61 1/8	64 1/8	A 156"	41 3/4	101 1/2	A 69 1/2	43 5/8	
49520-372	SR-37H	24 1/2				24 3/4	63 5/8									107 1/2		49 5/8	
49520-431	SR-43H	18 1/2	50"	44 1/8	22 1/16	18 3/4	63 5/8	49 7/8	30 3/8	54"	76 7/8	57 1/8	60 1/8	156"	39 3/4	103 1/2	65 1/2	49 5/8	B
49520-432	SR-43H	24 1/2				24 3/4	69 5/8									109 1/2		55 5/8	B

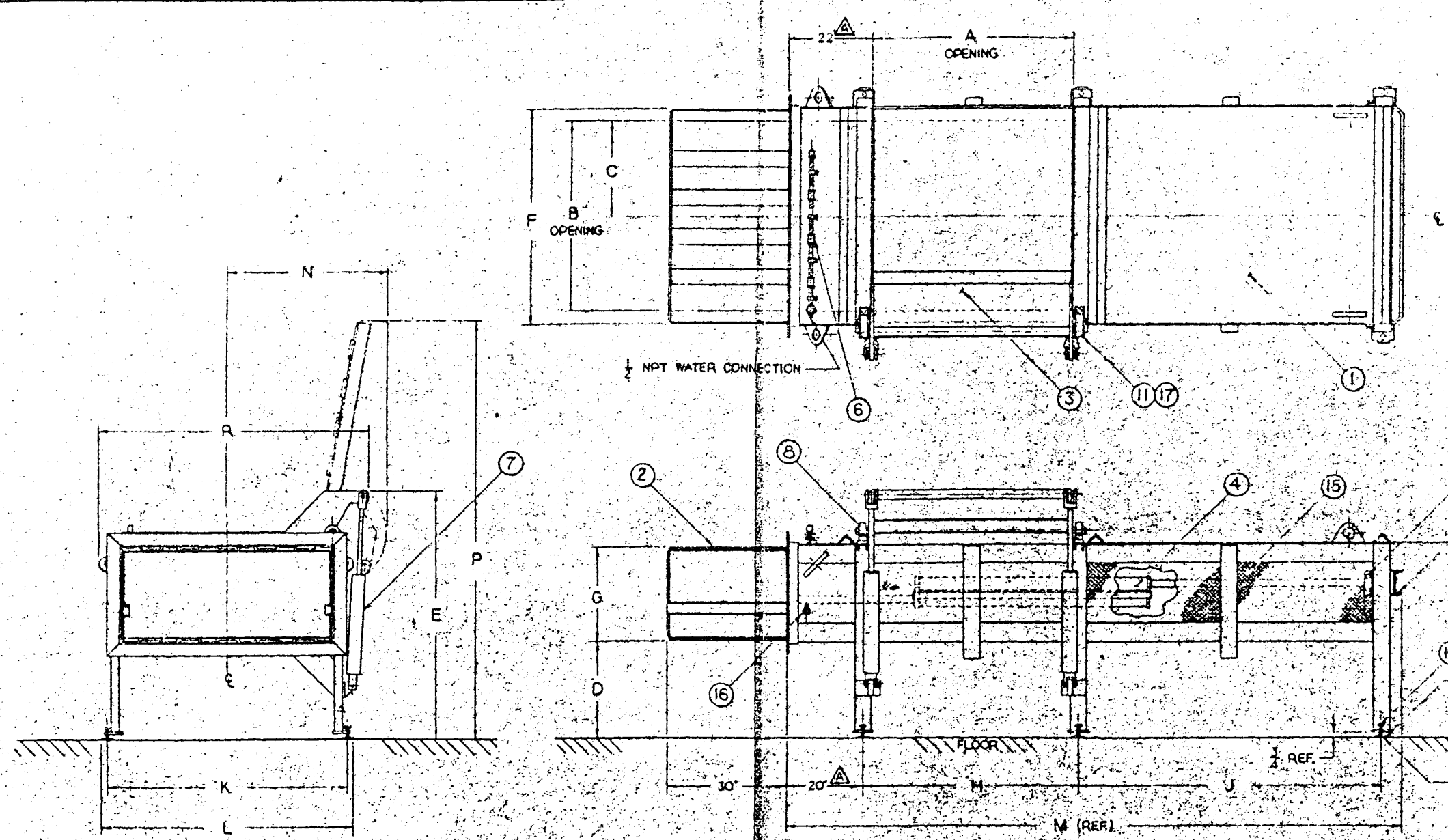

ARRANGEMENT "C" SHOWN.
ARRANGEMENT "B" OPP. HAND

A		ADDED 49520-221 THRU 49520-282	JCS	4-7-[illegible]
B	JCS	ADDED 49520-43H 49520-43[illegible]		1-16-[illegible]
A	JCS	69-1/2 WAS 69-1/2, 22 WAS 22-1/4, 156 WAS 156-1/4, 20 WAS 20-1/4		1-16-[illegible]
		REVISION	ECO	DATE

ENVIRONMENTAL CONTROL PRODUCTS, INC.
CHARLOTTE, NORTH CAROLINA

DRAWING AND ALL INFORMATION CONTAINED HEREIN IS THE PROPERTY OF ENVIRONMENTAL CONTROL PRODUCTS, INC. AND MAY NOT BE DISCLOSED OR USED WITHOUT WRITTEN PERMISSION

MATERIAL: SEE BM
FINISH
TOLERANCE UNLESS OTHERWISE SPECIFIED
FRACT.
DWN. JCS 9-16-80
CHK. [illegible] 9-23-80
ENG.

FINAL ASSEMBLY
SR-22H, SR-28H, SR-37H
HYDRAULIC RAM FEEDER
18 1/2 OR 24 1/2 SILL HEIGHT
ARRANGEMENT "B" OR "C"

PART NO.	MODEL NO	SILL HEIGHT	A.	B	C	D	E	F	G	H	J	K	L	M	N	P	R	S
49520-221	SR-22H	18½	40"	34⅛	17 1/16	18¼	57⅝	39⅞	24⅛	44"	72⅝	47⅛	50⅛	141⅝	34¼	87½	55½	43⅝
																93½		49⅝
49520-222	SR-22H	24½				24¾	63⅝											
49520-281	SR-28H	18½	40"	34⅛	17 1/16	18¼	63⅝	39⅞	30⅛	44"	72⅝	47⅛	50⅛	141⅝	34¼	93½	55½	49⅝
																99½		55⅝
49520-282	SR-28H	24½				24¾	69⅝											
49520-371	SR-37H	18½	50"	48⅛	24 1/16	18¼	57⅝	53⅞	24⅛	54"	76⅞	61⅛	64⅛	156"	41¼	101½	69½	43⅝
																107½		49⅝
49520-372	SR-37H	24½				24¾	63⅝											
49520-431	SR-43H	18½	50"	44⅛	22 1/16	18¾	63⅝	49⅞	30⅜	54"	76⅞	57⅛	60⅛	156"	39¾	103½	65½	49⅝
																109½		55⅝
49520-432	SR-43H	24½				24¾	69⅝											

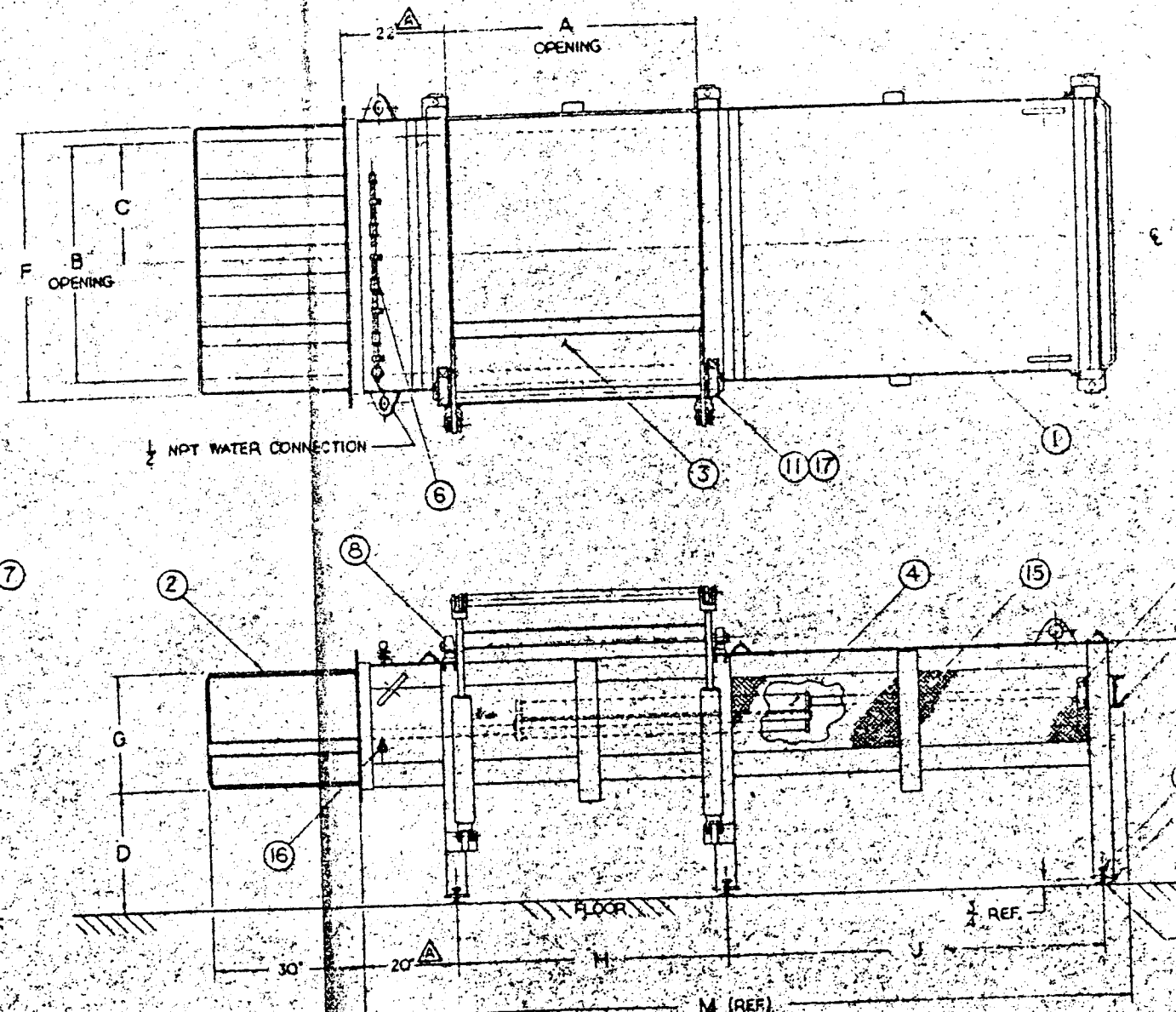

ARRANGEMENT "C" SHOWN.
ARRANGEMENT "B" OPP. HAND

A	JCS	ADDED 49520-221 THRU 49520-744	4-7-80
B	JCS	ADDED 49520-431 49520-432	1-16-80
A	JCS	49-1/2 WAS 49-1/2, 22 WAS 23-1/4 138 WAS 139-1/4, 20 WAS 21-1/4	1-16-80
REVISION			ECO DAT

ENVIRONMENTAL CONTROL PRODUCTS, INC.
CHARLOTTE, NORTH CAROLINA

DRAWING AND ALL INFORMATION CONTAINED HEREIN IS THE PROPERTY OF ENVIRONMENTAL CONTROL PRODUCTS, INC. AND MAY NOT BE DISCLOSED OR USED WITHOUT WRITTEN PERMISSION

MATERIAL: SEE BM
TOLERANCE UNLESS NOTED: FRACT. ±
FINISH

DWN. JCS 9-16-80
CHK. CLS 9-23-80
APP.

FINAL ASSEMBLY
SR-22H, SR-28H, SR-37H, SR-43H
HYDRAULIC RAM FEEDER
18½ OR 24½ SILL HEIGHT
ARRANGEMENT "B" OR "C"

PART NO.	MODEL NO	SILL HEIGHT	A	B	C	D	E	F	G	H	J	K	L	M	N	P	R	S	
49520-221	SR-22H	18½	40°	34⅛	17⅛	18¼	57⅝	39⅞	24⅛	44°	72⅝	47⅛	50⅛	141⅝	34¾	87½	55½	43⅝	
																93½		49⅝	4
49520-222	SR-22H	24½				24¼	63⅝												
49520-281	SR-28H	18½	40°	34⅛	17⅛	18¼	63⅝	39⅞	30⅛	44°	72⅝	47⅛	50⅛	141⅝	34¾	93½	55½	49⅝	
																99½		55⅝	4
49520-282	SR-28H	24½				24¼	69⅝												
49520-371	SR-37H	18½	50°	43⅓	24⅛	18¼	57⅝	53⅞	24⅛	54°	76⅞	61⅛	64⅛	156°	41¾	101½	69½	43⅝	
																107½		49⅝	4
49520-372	SR-37H	24½				24¼	63⅝												
49520-431	SR-43H	18½	50°	44⅛	22⅛	18¾	63⅝	49⅞	30⅜	54°	76⅞	57⅛	60⅛	156°	39¾	103½	65½	49⅝	
																109½		55⅝	6
49520-432	SR-43H	24½				24¾	69⅝												

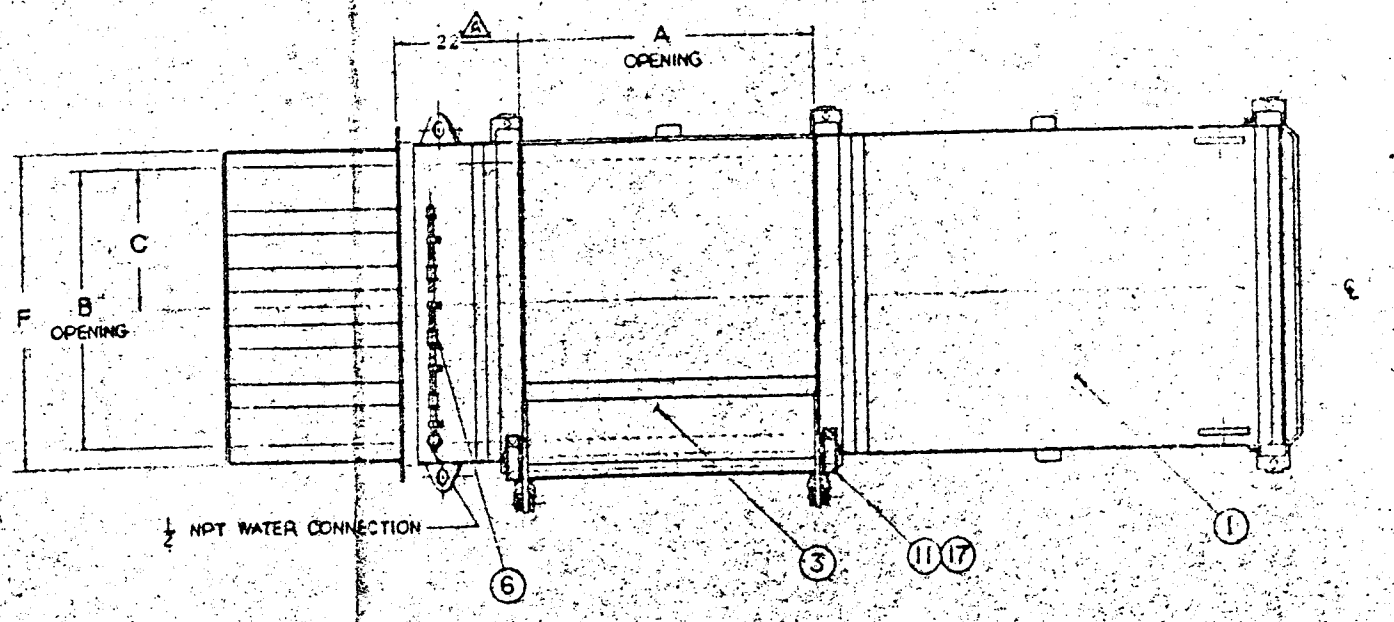

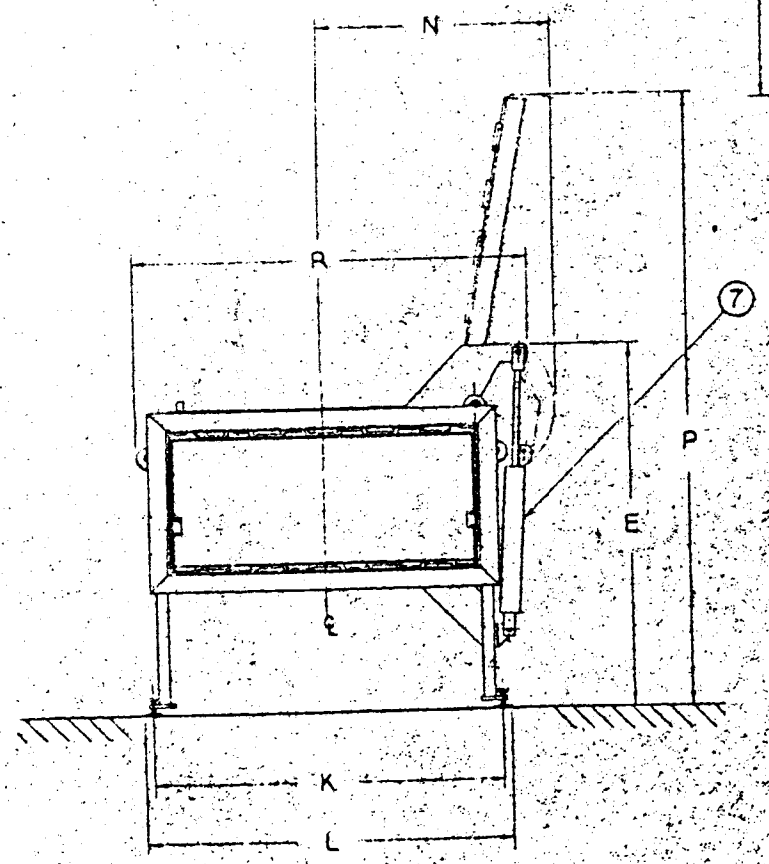

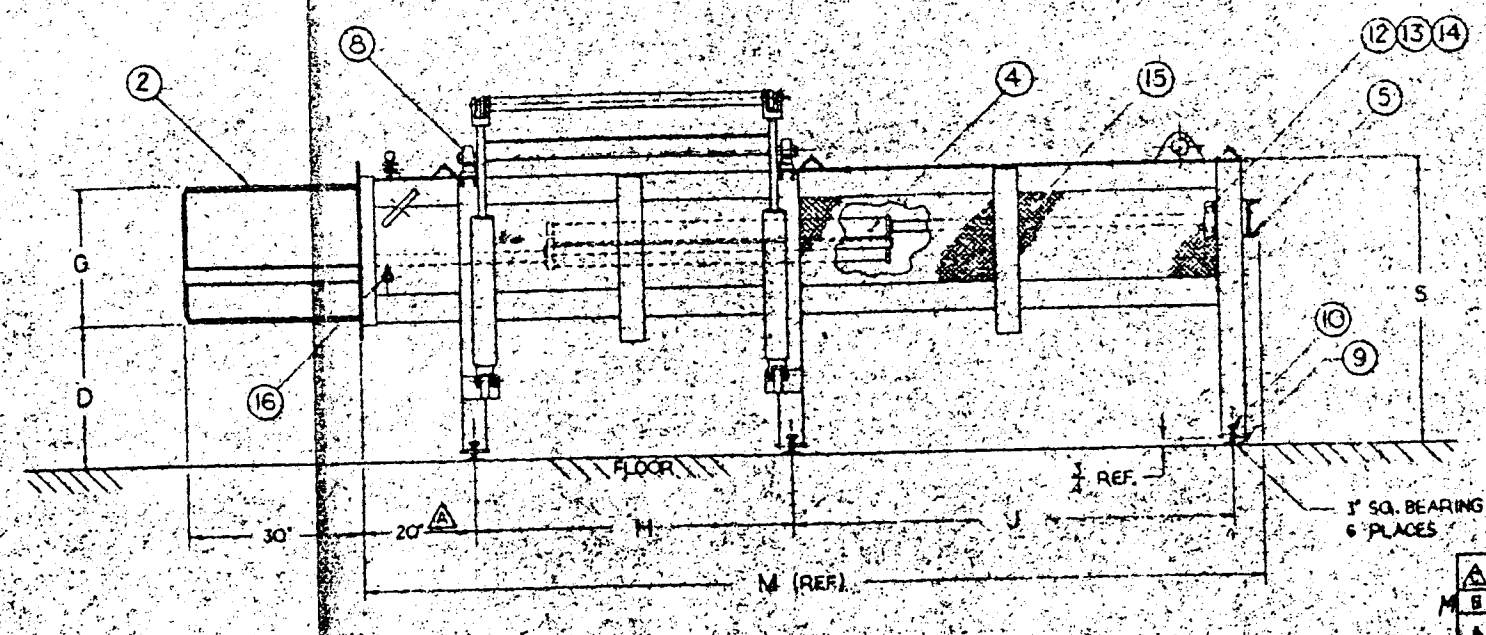

ARRANGEMENT "C" SHOWN.
ARRANGEMENT "B" OPP. HAND

A	JCS	ADDED 49520-221 THRU 49520-281	JCS	4-7-80
B	JCS	ADDED 49520-431 49520-432	JCS	1-16-80
A	JCS	69½ WAS 69-1/2 W&B 49-1/8 WAS 49 1/8 W&B 43-5/8 WAS 43 1/8	JCS	1-16-80
		REVISION	ECO	DAT

ENVIRONMENTAL CONTROL PRODUCTS, INC.
CHARLOTTE, NORTH CAROLINA

DRAWING AND ALL INFORMATION CONTAINED HEREIN IS THE PROPERTY OF ENVIRONMENTAL CONTROL PRODUCTS, INC. AND MAY NOT BE DISCLOSED OR USED WITHOUT WRITTEN PERMISSION

MATERIAL: SEE BM
FINISH:
TOLERANCE UNLESS NOTED: FRACT. ±
DWN. JCS 9-16-80
CHK. CLS 2-3-80
ENG.

FINAL ASSEMBLY
SR-22H, SR-28H, SR-37H
HYDRAULIC RAM FEEDER
18½ OR 24½ SILL HEIGHT
ARRANGEMENT "B" OR "C"

PART NO.	MODEL NO	SILL HEIGHT	A	B	C	D	E	F	G	H	J	K	L	M	N	P	R	S	
49520-221	SR-22H	18 1/2	40"	34 1/8	17 1/16	18 3/4	57 5/8	39 7/8	24 3/8	44"	72 5/8	47 1/8	50 1/8	141 5/8	34 3/4	87 1/2	55 1/2	43 5/8	A
49520-222	SR-22H	24 1/2				24 3/4	63 5/8									93 1/2		49 5/8	
49520-281	SR-28H	18 1/2	40"	34 1/8	17 1/16	18 3/4	63 5/8	39 7/8	30 3/8	44"	72 5/8	47 1/8	50 1/8	141 5/8	34 3/4	93 1/2	55 1/2	49 5/8	A
49520-282	SR-28H	24 1/2				24 3/4	69 5/8									99 1/2		55 5/8	
49520-371	SR-37H	18 1/2	50"	48 1/8	24 1/16	18 3/4	57 5/8	53 7/8	24 3/8	54"	76 7/8	61 1/8	64 1/8	A 156"	41 3/4	101 1/2	A 69 1/2	43 5/8	
49520-372	SR-37H	24 1/2				24 3/4	63 5/8									107 1/2		49 5/8	
49520-431	SR-43H	18 1/2	50"	44 1/8	22 1/16	18 3/4	63 5/8	49 7/8	30 3/8	54"	76 7/8	57 1/8	60 1/8	156"	39 3/4	103 1/2	65 1/2	49 5/8	B
49520-432	SR-43H	24 1/2				24 3/4	69 5/8									109 1/2		55 5/8	B

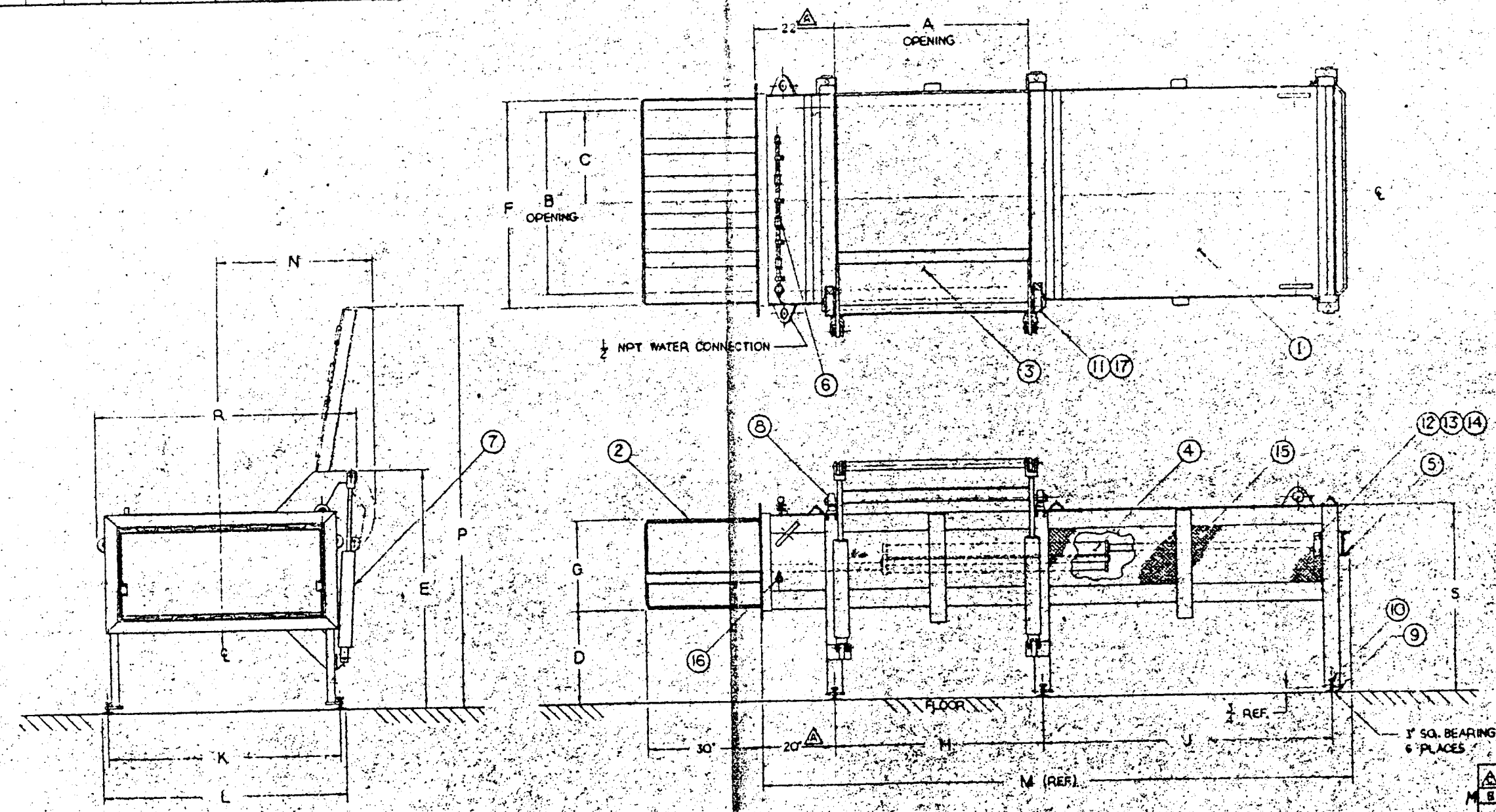

ARRANGEMENT "C" SHOWN.
ARRANGEMENT "B" OPP. HAND

A	JCS	ADDED 49520-221 THRU 49520-282	JCS	4-7-[illegible]
B	JCS	ADDED 49520-431 & 49520-432	[illegible]	1-18-[illegible]
A	JCS	69-1/2 WAS 69-1/2, 22 WAS 23-1/4, 156 WAS 158-1/4, 20 WAS 20-1/4	[illegible]	1-16-[illegible]
MODEL	LOCATION	REVISION	ECO	DATE

ENVIRONMENTAL CONTROL PRODUCTS, INC.
CHARLOTTE, NORTH CAROLINA

DRAWING AND ALL INFORMATION CONTAINED HEREIN IS THE PROPERTY OF ENVIRONMENTAL CONTROL PRODUCTS, INC. AND MAY NOT BE DISCLOSED OR USED WITHOUT WRITTEN PERMISSION

MATERIAL: SEE BM
FINISH
TOLERANCE
FRACT.
DWN. JCS 9-16-80
CHK. [illegible] 7-23-80
ENG.

FINAL ASSEMBLY
SR-22H, SR-28H, SR-37H
HYDRAULIC RAM FEEDER
18 1/2 OR 24 1/2 SILL HEIGHT
ARRANGEMENT "B" OR "C"

PART NO.	MODEL NO	SILL HEIGHT	A	B	C	D	E	F	G	H	J	K	L	M	N	P	R	S
49520-221	SR-22H	18½	40°	34⅛	17 1/16	18¼	57⅝	39⅞	24⅛	44°	72⅝	47⅛	50⅛	141⅝	34¼	87½	55½	43⅝
49520-222	SR-22H	24½				24¾	63⅝									93½		49⅝
49520-281	SR-28H	18½	40°	34⅛	17 1/16	18¼	63⅝	39⅞	30⅛	44°	72⅝	47⅛	50⅛	141⅝	34¼	93½	55½	49⅝
49520-282	SR-28H	24½				24¾	69⅝									99½		55⅝
49520-371	SR-37H	18½	50°	48⅛	24 1/16	18¼	57⅝	53⅞	24⅛	54°	76⅞	61⅛	64⅛	156°	41¼	101½	69½	43⅝
49520-372	SR-37H	24½				24¾	63⅝									107½		49⅝
49520-431	SR-43H	18½	50°	44⅛	22 1/16	18¾	63⅝	49⅞	30⅛	54°	76⅞	57⅛	60⅛	156°	39¾	103½	65½	49⅝
49520-432	SR-43H	24½				24¾	69⅝									109½		55⅝

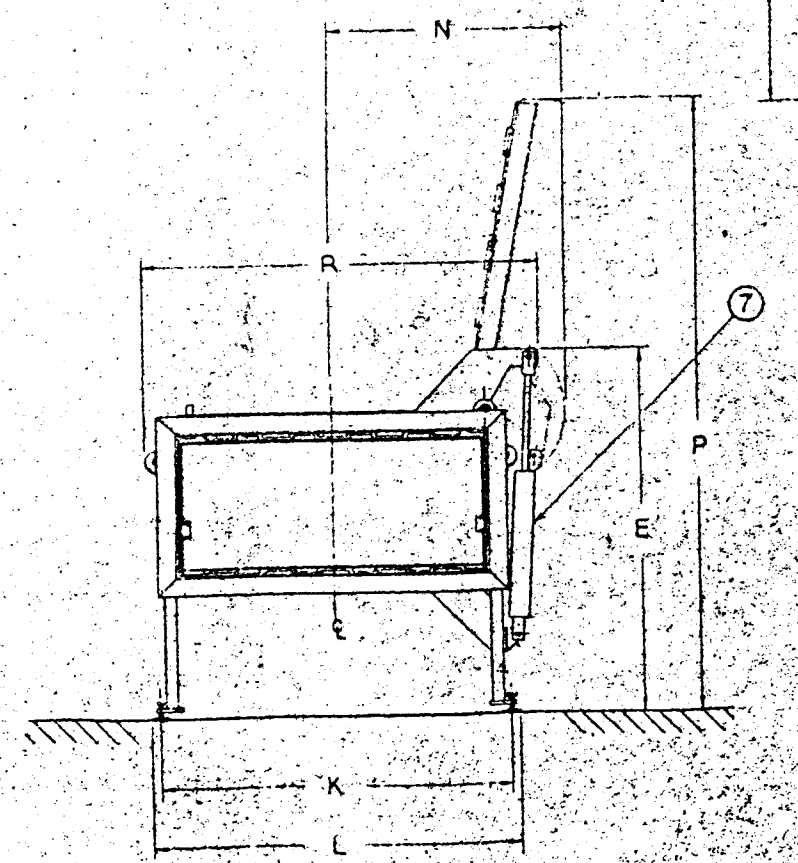

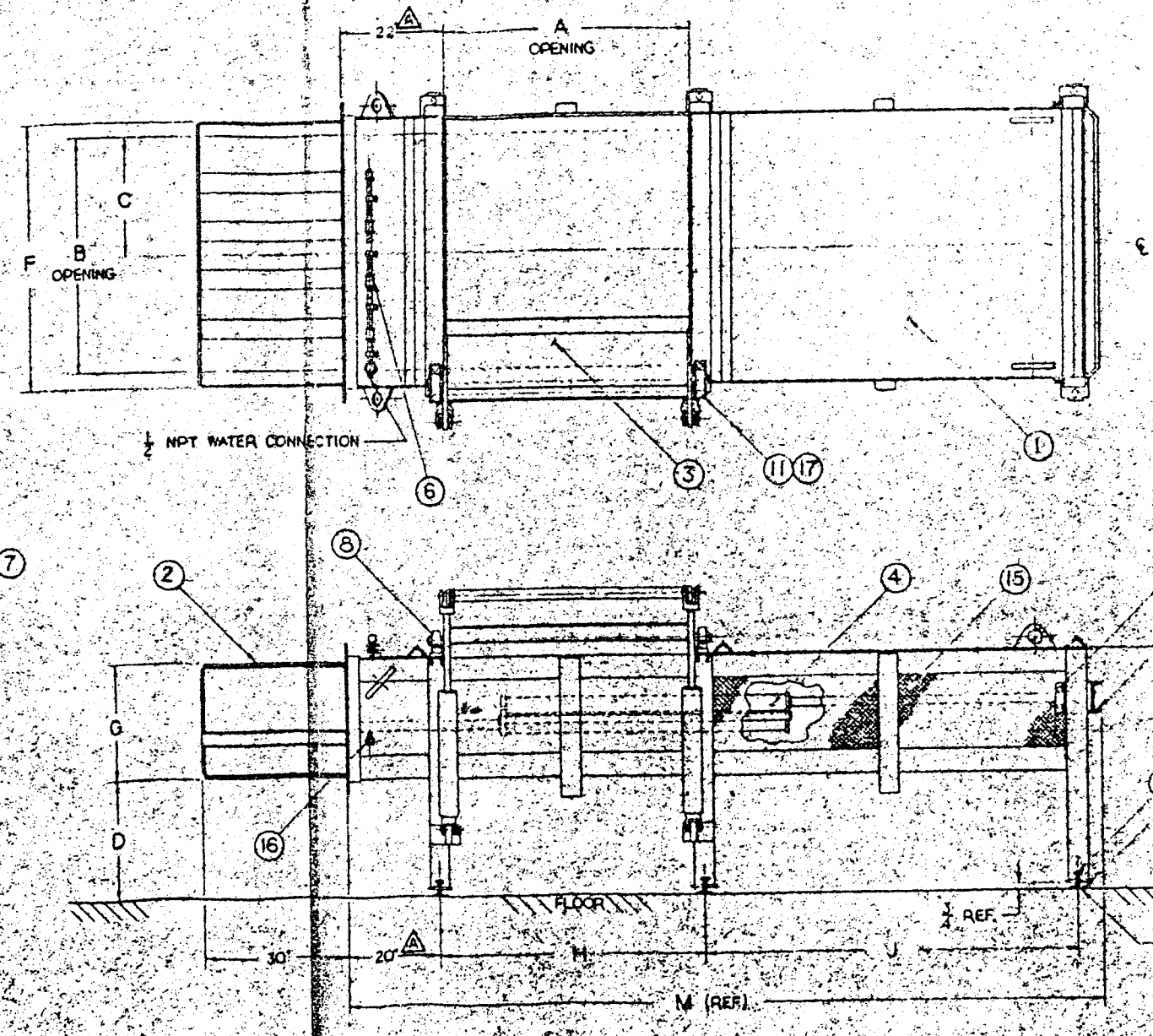

ARRANGEMENT "C" SHOWN.
ARRANGEMENT "B" OPP HAND

A	JCS	ADDED 49520-221 THRU 49520-432	4-7-80
B	JCS	ADDED 49520-281 49520-432	1-16-80
A	JCS	69-1/2 WAS 69-1/2 WAS 23-1/4 WAS 23-1/4 WAS 20-1/4 WAS 20-1/4	9-16-80
MARK	LOC. #	REVISION	ECO

ENVIRONMENTAL CONTROL PRODUCTS, INC.
CHARLOTTE, NORTH CAROLINA

DRAWING AND ALL INFORMATION CONTAINED HEREIN IS THE PROPERTY OF ENVIRONMENTAL CONTROL PRODUCTS, INC. AND MAY NOT BE DISCLOSED OR USED WITHOUT WRITTEN PERMISSION

MATERIAL	SEE	TOLERANCE UNLESS OTHERWISE SPECIFIED	
FINISH	RM	FRACT.	
DRWN.	JCS	9-16-80	
CHK.	CLS	2-23-80	
APPR.			

FINAL ASSEMBLY
SR-22H, SR-28H, SR-37H
HYDRAULIC RAM FEEDER
16½ OR 24½ SILL HEIGHT
ARRANGEMENT "B" OR "C"

Exhibit #15

OPERATION

Once equipment has been checked-out, all control setpoints have been established by an E. C. P. Field Representative, and the equipment has been placed into operation, the simplified operational sequence outlined below will be typical from an operator's standpoint. For more technical details on specific electrical interlocks and control circuitry, the reader is referred to the detailed Electrical Control Schematics within this manual. An operator, however, will not normally be aware of these technical details.

Simplified Operating Procedure

1 - Before startup of any incineration equipment, it is recommended that the operator open the rear cleanout door and quickly inspect the chambers to make certain that everything is secure, i.e., no one is inside the unit, no flammable liquids or explosives are in the unit, underfire air ports are clean, ash pits (if ash removal has been provided) are clear and burner ports are unobstructed. This is also a good opportunity to make a general inspection of the refractory surfaces for any signs of damage.

2 - Close rear cleanout door and tighten T-bolt latches.

3 - Turn on power to unit.

4 - Verify that all operating and limit temperature controls are at their proper setting. (Refer to subsequent section entitled Air and Control Settings.)

5 - Make sure all fuel valves are open.

6 - Reset manual lockout on fuel pressure switches. On units with internal rams, open steam cooling valve to ram chambers.

OPERATION

7 - Turn key switch or push pushbutton on electrical panel to "Start" position.

8 - Burners will now fire after an automatic pre-purge period. If flame failure occurs on either burner as indicated by "Red" pilot light on control panel, reset the safety switch reset button in the cover of the flame safeguard relay for that particular burner. Allow burner(s) to attempt to fire a second time. If flame failure occurs again, proceed to maintenance section of this manual for possible pilot adjustment procedure.

9 - Turn ram hatch switch to "ON" position. Hatch cover will open.

10 - "Amber" warmup pilot light will be indicated on control panel.

11 - Waste may now be placed into the ram feeder at the operator's option. Do not place so much waste into the feeder that a pyramiding effect occurs above the top level of the housing thereby requiring the hatch cover to compress the waste for complete closure of the hatch cover. This will cause undue wear on the hatch clevises and hydraulic cylinders and possible distortion of the hatch cover.

12 - Once waste has been placed into the ram feeder, the operator may push the momentary contact, green "LOAD" pushbutton to close the hatch cover. The operator must maintain pressure on this pushbutton until the hatch cover has closed completely. This is a designed-in safety feature which results in automatic opening of the hatch cover to its at rest position if the operator removes his hand from the pushbutton for any reason.

13 - On the initial load placed into the ram feeder, no further action will occur until the incinerator combustion chamber (upper chamber) has reached its minimum desired temperature as indicated by the lower setpoint on the A.P.I. temperature controller.

OPERATION

14 - Once minimum upper chamber temperature has been reached, "Blue" standby pilot light comes on, program timer "2TR" will time out, "Green" load pilot light will come on, incinerator charging door will open and ram feeder will start forward to push waste into the incinerator. "2TR" program timer is an adjustable 0-60 minute timer. Its proper setting will normally be determined by the E. C. P. field representative at startup depending on bulk density and type of waste. Its normal settings are from six (6) to twelve (12) minutes.

15 - Once the ram feeder reaches its most forward position as controlled by a timer circuit, ram will reverse and then stop just outside the incinerator charging door. Charging door will now close until the door-down limit switch is made and ram feeder will now retract to its at-rest position. Hatch cover will open for additional charging of waste.

16 - Temperature will now begin to increase in the lower chamber. Once the temperature has reached the low setpoint on the A.P.I. temperature controller for the ignition chamber (lower chamber), the ignition burner will shut off automatically. This burner is usually not on for more than twenty to thirty minutes once waste is charged to the unit.

17 - The operator may load waste into the ram feeder at any time when the hatch cover is in the open position. Furthermore, he can close the hatch cover at any time. The waste however, will not be pushed into the incinerator until the program timer "2TR", has timed out. Each cycle however, will be as follows:

"Blue" Standby Pilot for all conditions except when waste is being charged.

"Green" Load Pilot when incinerator charging door opens and waste is being charged.

"White" Burner Pilot when burner(s) is on.

"Red" Flame Failure Pilot when burner misfire occurs.

18 - After thermal equilibrium has been established (usually after three to four hours of charging) the upper combustion chamber temperature will reach the upper setpoint of the upper chamber A.P.I. temperature controller and the main burner will shut off automatically.

19 - If for any reason, the temperature in the lower ignition chamber exceeds the upper setpoint of the lower chamber A.P.I. temperature controller, the electrical circuitry will lock-out the ram feeder circuit thereby preventing any additional charging until the temperature has fallen back within safe operating limits. All "T", "TES" and "TOH" Series units are also provided with a High Limit Temperature Control in the upper combustion chamber. If temperatures exceed this limit, the feeding system is also electrically locked out, i.e., no further action of the ram feeder or incinerator charging door will occur until the temperatuare has fallen back within its prescribed range. Under no circumstances should the setpoint of this High Limit exceed 2300°F.

20 - It is important to indicate that the upper combustion chamber temperature must be held at its upper setpoint by either the use of auxiliary fuel or by the heat of combustion of the waste material itself. For minimal auxiliary fuel usage, the operator must load waste at the prescribed nominal rating of the unit. By so doing, it is commonly experienced that no substantial auxiliary fuel usage is required after the three to four hour initial heatup period.

21 - During the operating period, it may be necessary for the operator to check the underfire airports for plugging. It is re-

commended that the customer provide himself with a suitable draft gauge permanently mounted in a convenient place near the underfire air plenum on the lower area of the incinertor ignition chamber to aid the operator in determining when the underfire air ports are becoming plugged and require cleaning. The E. C. P. service representative will normally assist in the determination of the correct underfire air setting at the time of startup and will offer suggestions on the installation of the above mentioned draft gauge.

When underfire air ports become plugged, they may be cleaned externally. On all "T" series units, access to each individual underfire air port is available by unscrewing the pipe caps on the underfire air plenums. On all "TES" and "TOH" series units access to individual cross plenums is available by opening the quick-lock doors. In either case, only one cap or one door should be opened and cleaned at a time. It is also stressed that the operator observe precaution when opening the ports. Always remove the caps or open the doors slowly so that no flash back occurs. The operator should <u>always</u> wear a full face shield when cleaning these ports or plenums. No special tool is required and the tool may be a piece of pipe or steel rod with a "T" handle welded on the end for the operator's convenience. On all "T" series units, cleaning is accomplished by inserting the rod tool into the port opening and running the pipe back and forth into the firebed several times. This will dislodge any clinker or slag that may have formed at the internal end of the port. On all "TES" and "TOH" series units, plugging will be less of a problem in that the individual air holes on each cross plenum are facing away from normal material flow. A better tool for these units would be a tool as generally described above but with a 90 degree hook on the end as illustrated on the following page. In this case, the operator must "feel" his way into each air hole with the hooked tool. After one port or cross plenum has been cleaned, replace

the pipe cap or close the quick-lock door as the case may be and proceed to the next one. The illustrations describe the two different systems. CAUTION! On units equipped with special steam injection, turn steam off momentarily while the cleaning operation is performed. Turn the steam back on when the caps or quick-lock doors have been replaced.

22 - During the operating period, the following safety features will be observed:

(2) Each time the ram feeder withdraws from the incinerator chamber and the guillotine charging door closes, a water spray manifold on the nose of the ram feeder will be energized to admit a spray into the feeder housing to extinguish any fire or sparks.

(b) Should an obstruction cause jamming of the charging door or ram feeder, each will recycle in an attempt to clear the obstruction. If more than three or four cycles occur without complete clearing of the obstruction, the operator should call an electrician or mechanic familiar with the electrical over-rides to solve the situation.

23 - E. C. P. incinerators incorporate a "shut-down" circuit which allows the operator to leave the equipment unattended after the last load of waste has been placed into the ram feeder. This circuit will allow an automatic shut-down of the incinerator after an adjustable timer (1TR, 0-10 hours) has timed out. This allows the combustion air blowers and burners to operate normally until the waste inside the incinerator has adequate time to burndown. The setting of this timer will normally be determined from experience but normally is around four (4) hours. The shut-down procedure is as follows:

(a) When operator has placed last load of waste into the ram feeder, push "Green" Load Momentary Contact pushbutton to close hatch cover.

(b) Turn ram hatch selector switch to "OFF" position. This will keep the hatch cover closed after the ram comes back to its at-rest position. Push "Shutdown" pushbutton or turn keyswitch to "Shutdown" position.

(c) Operator may now leave. Hatch cover will remain closed for security, safety and protection from weather.

(d) Incinerator will continue to run until shutdown timer "1TR" times out at which time control circuit will be de-energized.

REVIEW OF PRIMARY CONTROL SETPOINTS

(I) (Black) = Indicated Temp.
(Red) = Setpoints

Upper Chamber Operating Temperature Controller

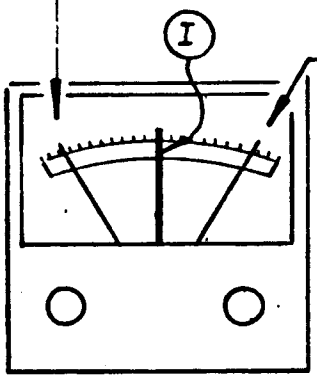

Low Setpoint = 1000 - 1200°F

High Setpoint,
For Cellulosic Materials = 1600 - 1800°F.
For Synthetics = 1800 - 2000°F.

API 303X

Lower Chamber Operating Temperature Controller

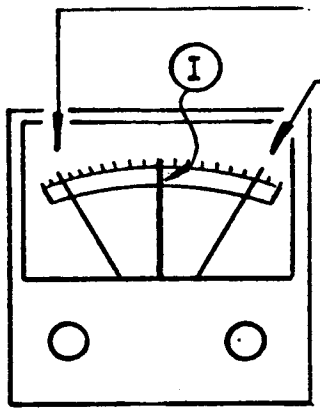

Low Setpoint = 1000 - 1200°F

High Setpoint = 1800 - 2000°F normally but should never be greater than 2300°F.

API 303X

Upper Chamber Temperature Limit Control

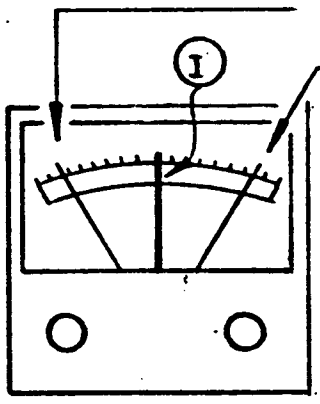

Low Setpoint on this control (if provided) is usually used as an auxiliary contact.

High Limit Setpoint = 2000 - 2200°F normally but should never be greater than 2300°F.

API 303X

REVIEW OF PRIMARY CONTROL SETPOINTS
(Continued)

Shutdown Timer
1TR
0-10 Hours

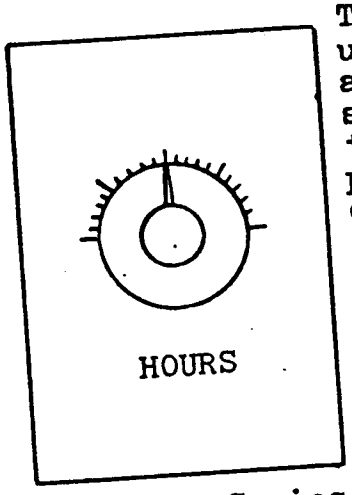

Eagle BR Series

This adjustable timer is usually set for four(4) hours and allows the incinerator to shut down automatically after the last load of waste has been placed into the incinerator once the operator has turned the keyswitch to the shutdown mode or pushed the shutdown pushbutton and the 1TR timer has timed out.

Program Timer
2TR
0-60 Minutes

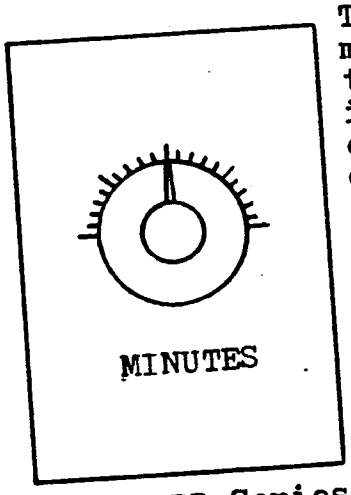

Eagle BR Series

This adjustable timer determines the frequency with which the ram feeder inserts waste into the incinerator. The exact setting depends on the chemical and physical characteristics of the waste material being incinerated. The E.C.P. service representative will determine this setting at startup of the equipment. Average values will range from six(6) to twelve(12) minutes.

SOME ADDITIONAL PRACTICAL POINTERS FOR UNDERFIRE AIR ADJUSTMENT

All "T", "TES" and "TOH" Series units are equipped with a viewport at the rear of the lower chamber. The viewport housing should have a 1/8" diameter hole drilled through the pipe housing on the underside between the sight glass and the incinerator wall. This hole allows a small amount of outside air to bleed through the hole into the housing and thereby minimizes the "smoking up" of the viewport glass. It will be necessary, however, to periodically remove the sight glass for cleaning. (Never remove this glass during operation. Never look into the viewport if glass is not in place . . . flashbacks may occur.)

A great deal can be learned concerning the combustion processes going on inside the lower chamber simply by observing the conditions through this viewport at different intervals of time. As was previously discussed in the Theory Section of this manual, the lower chamber's primary purpose is to drive off the volatile portion (not to burn this portion) of the waste and to burn down the fixed carbon portion. Depending on the waste characteristics, it is not uncommon to observe a completely <u>black</u> atmosphere inside the lower chamber immediately after a new load of waste has been charged. This black condition may last for several minutes (in the case of synthetics such as rubber, plastics, polyesters, etc., this condition may predominate even up to the next charge) after which "tongues of fire" may become gradually visible. The general color of the lower chamber will then become a dirty orange. It will generally be impossible to see any detailed outline of the waste bed or incinerator chamber features except at the moment when the guillotine charging door opens just prior to a new insertion of waste material by the feeder ram. After the new load of waste has entered the incinerator, the atmosphere within will again take on the black color. This blackness is simply the volatile matter release which ignites and burns in the upper combustion chamber. If, instead of the above cycle of color changes from black to orange

SOME ADDITIONAL PRACTICAL POINTERS
FOR UNDERFIRE AIR ADJUSTMENT

to black, a bright yellow, white or blow torch effect coming from the underfire air pipes is observed, chances are good that too much underfire air is being introduced into the lower chamber. The underfire air control valve should be throttled back if of the manual control type or the modulating underfire temperature setting on the Partlow controller should be decreased in the case of modulating underfire air control.

The above comments apply only to the continuous and stabilized operating period, i.e., the incinerator is up to temperature and waste is being charged at consistent intervals at the rated capacity of the incinerator. The above color changes do not apply to the heatup or burndown cycle of the operation.

NOTE: The 1/8" diameter drilled hole in the viewport housing described above will also serve as a convenient point to take draft readings to make certain the draft in the lower chamber is in the recommended range of a negative 0.15" to 0.20" W.C. pressure as indicated earlier.

INPUT

An extensive variety of applications can be handled from the input options available to the 76 Series: thermocouples, resistance temperature detectors (RTDs), millivolts and volts.

Thermocouples 10mV minimum, 100mV maximum span with cold junction ambient compensation. Thermocouple break protection is standard upscale or downscale and changeable in the field.

Resistance Temperature Detectors Input signal from a 2- or 3-wire RTD, with nominal resistance of 100 ohms, minimum span of 20 ohms, maximum span 200 ohms. For standard ranges: 100 ohms at 0°C platinum element with temperature coefficient of .00385 ohm/ohm/°C.

Millivolts 10mV minimum, 100mV maximum span.

Volts 1V minimum, 10V maximum span.

OUTPUTS

On-Off Switching The basic On-Off controller, with differential of 0.45% of span, is satisfactory for many applications not requiring proportional precision. Available with plug-in solid state (triac) switching or electro-mechanical relays, which are field-changeable, or zero angle solid state switching.

Time Proportioning Controllers have adjustable cycle time rate of 5 to 50 seconds for electro-mechanical contactors, field-interchangeable from 0.5 to 5 seconds for optimum control of solid state contactors. Proportional plus integral and proportional plus integral plus derivative are available.

Constant Current Controllers provide a short circuit-proof proportional 4 to 20mA dc output for precise control. Proportional plus integral and proportional plus integral plus derivative also available.

Dual Output Either solid state or electro-mechanical relay output, with second output available as on-off or time proportioning. Second setpoint front-adjustable from −25% to +25% of instrument span from the primary setpoint for dual on-off output; −10% to +10% of span for proportional/on-off, and −5% to +5% for dual proportional, within span limits. When secondary output is time proportioning, the gain ratio of the primary output to the secondary output is 4:1, with heating and cooling output overlap nominally zero.

Motor Modulation Feedback controller actuates dual solid state switches, or relays, to control closely an electrical actuator with feedback slidewire resistance between 100 and 1000 ohms. Feedback is a proportional position signal to the controller. Demand signal to the controller is compared with the feedback signal from the actuator. Resulting unbalance drives the actuator to a position corresponding to the demand signal. Proportional plus integral and proportional plus integral plus derivative also available.

High Limit The high limit device, with manual reset, shuts down a process, or sounds an alarm, at setpoint. High limit can be changed to low limit in the field by means of jumpers. A front panel light energizes when setpoint is exceeded. Instrument cannot be manually reset until process variable is again below setpoint.

CONTROL MODES

Proportional with Manual Reset Power to process is at either minimum or maximum value until control input enters the proportional band. The proportional band (gain) straddles setpoint for single output control and is adjustable from 2% to 50% of the controller span (0.7% to 17% for dual proportional output first output).

As input enters the proportional band, power applied to the process is proportionally adjusted according to the signal produced by comparing setpoint and actual process condition. At setpoint, approximately 50% of the controller's output is applied to the process.

Manual reset allows the operator to shift the proportional band—to increase or decrease the amount of power to the process—in compensation for offsets in the process, without repositioning setpoint.

Proportional with Integral With integral (auto reset) action, the proportional band is automatically shifted to compensate for offsets in the process, once the initial front panel reset adjustment has been matched to a given process.

Anti-windup circuitry inhibits reset action until the process had entered the proportional band.

Proportional plus Integral plus Derivative In addition to auto reset, there is adjustable derivative action, which matches the rate function with response time of the process. This automatic compensation of controller output for process load changes minimizes overshoot and cycling at startup or in large process upsets.

ALARMS AND REMOTE SIGNALS

Alarms Process alarm, adjustable from 0 to 100%, intended primarily as a warning that process has reached an unsafe level and corrective action is required.

Deviation alarm, adjustable ±25% of span, tracks primary setpoint. Designed to prevent product loss through overtemperature, early warning that process is going out of control.

Remote Setpoint Controllers are designed to receive voltage or resistance setpoints from a remote source, such as a programmer.

Process Signal Process signal, linearized with digital setpoint, is available for remote applications, such as data acquisition equipment and recording.

Thumbwheel Digital Setpoint with Deviation Meter

Thermocouple input signal fully linearized for all digital setpoint units, setpoint reads directly in degrees F or C; reference to correlation tables unnecessary. Three or four digits, with 1° positive setability. Eight plus and minus deviation meter scales calibrated in degrees, depending on temperature range. Controllers available with no indication or full-span process indication.

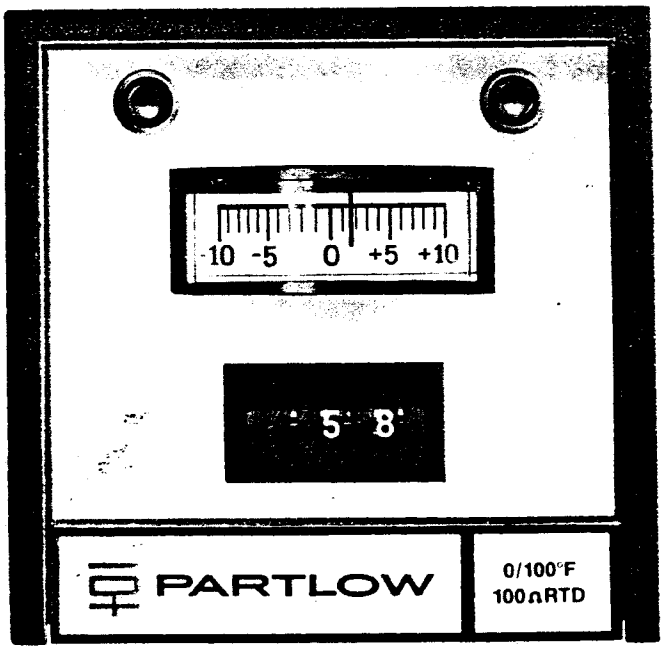

Thumbwheel Digital Setpoint with LED Process Meter

Same setpoint advantages as listed for Thumbwheel Digital Setpoint with Deviation Meter. Fully linearized LED process meter provides easy-to-read indication of 1° increments in .3" digits. Meter also used in LED indication-only model.

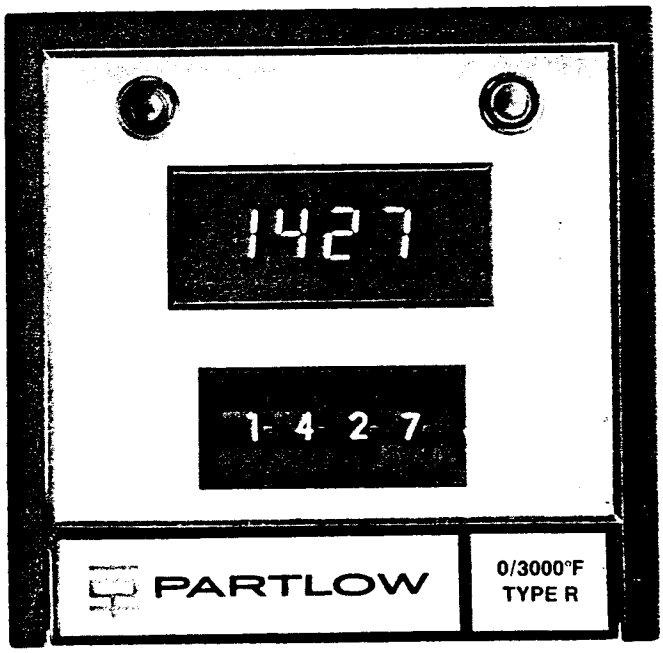

PARTLOW'S SOLID STATE SERIES 76

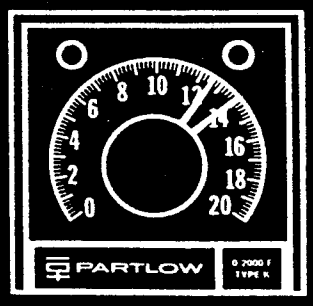

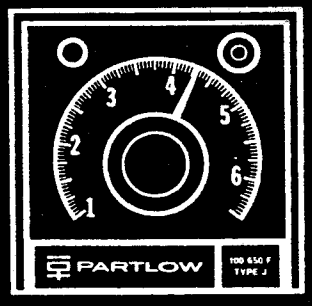

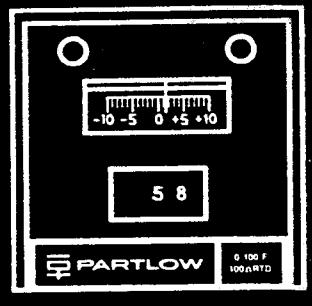

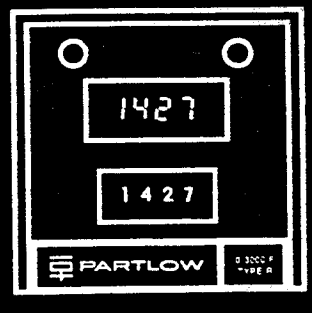

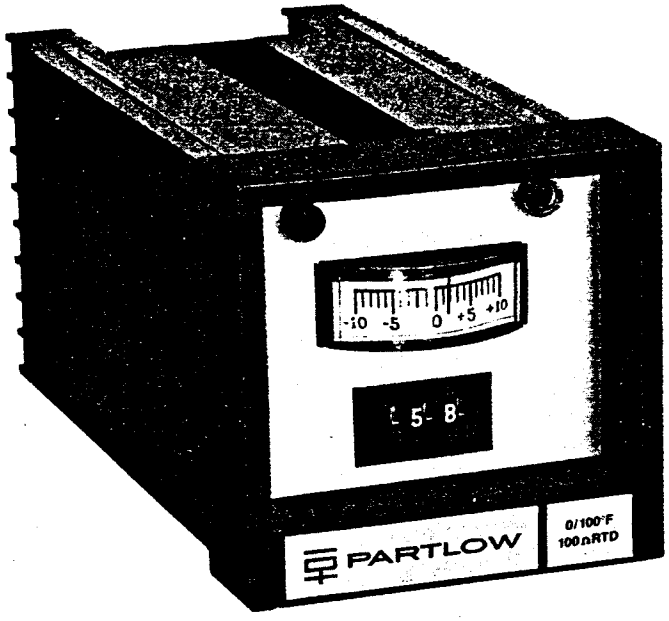

ECONOMICAL VERSATILITY IN PROCESS CONTROL

The 76 Series solid state controller line was designed to furnish quality instrumentation at moderate cost — in continuation of the basic manufacturing philosophy of The Partlow Corporation for more than a half century.

A versatile selection of setpoints, output forms, control modes, alarms and display features provides a breadth of flexibility in specifying for process control usually available only in costlier electronic instruments. And there is a degree of sophistication not normally found in comparably priced controllers.

For instance, instead of characterizing setpoint to thermocouple non-linearity, the sensor signal itself is linearized to compare with linear digital setpoint. Hence, in addition to eliminating setpoint correlation tables, the design provides true digital readout and a linear 1–5 volt process signal for remote use.

And range changes for analog setpoint models are internally adjustable rather than by substitution of range cards and electronic components.

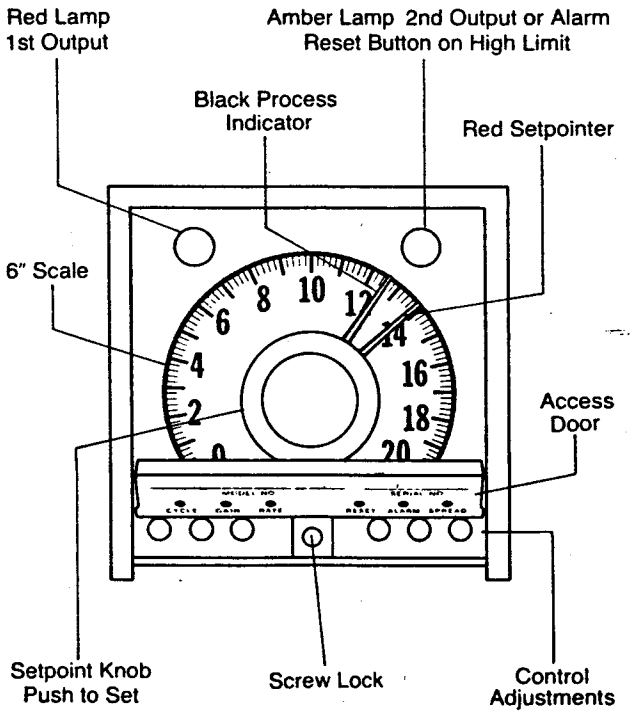

BENEFITS

- Built-in adjustment for range changes eliminates substitution of range cards and electronic components.
- Plug-in triac, electro-mechanical relays and 4–20 mA outputs are interchangeable.
- Thermocouple input signal fully linearized for digital setpoint units; setpoint is read directly in degrees F or C, without reference to correlation tables.
- Thermocouple break protection standard, upscale or downscale.
- Gold-plated contacts on sensor input terminals.
- High-torque analog meter.
- TRUE 1% accuracy over rated operating conditions.
- Solid state circuitry, with integrated circuits for maximum component life.
- DIN-conforming design, with surface as well as flush mounting.
- Plug-in modular construction.
- 6" analog scales available in F°,C° and combination F° and C°.
- Control adjustments behind front cover access door.
- Process and deviation alarms available.
- UL Component listed for all models except high limit and 20 Amp triac output.
- FM approved high limit. CSA approved.

HOW TO ORDER

Complete entire 15-digit model number, as shown in example below.

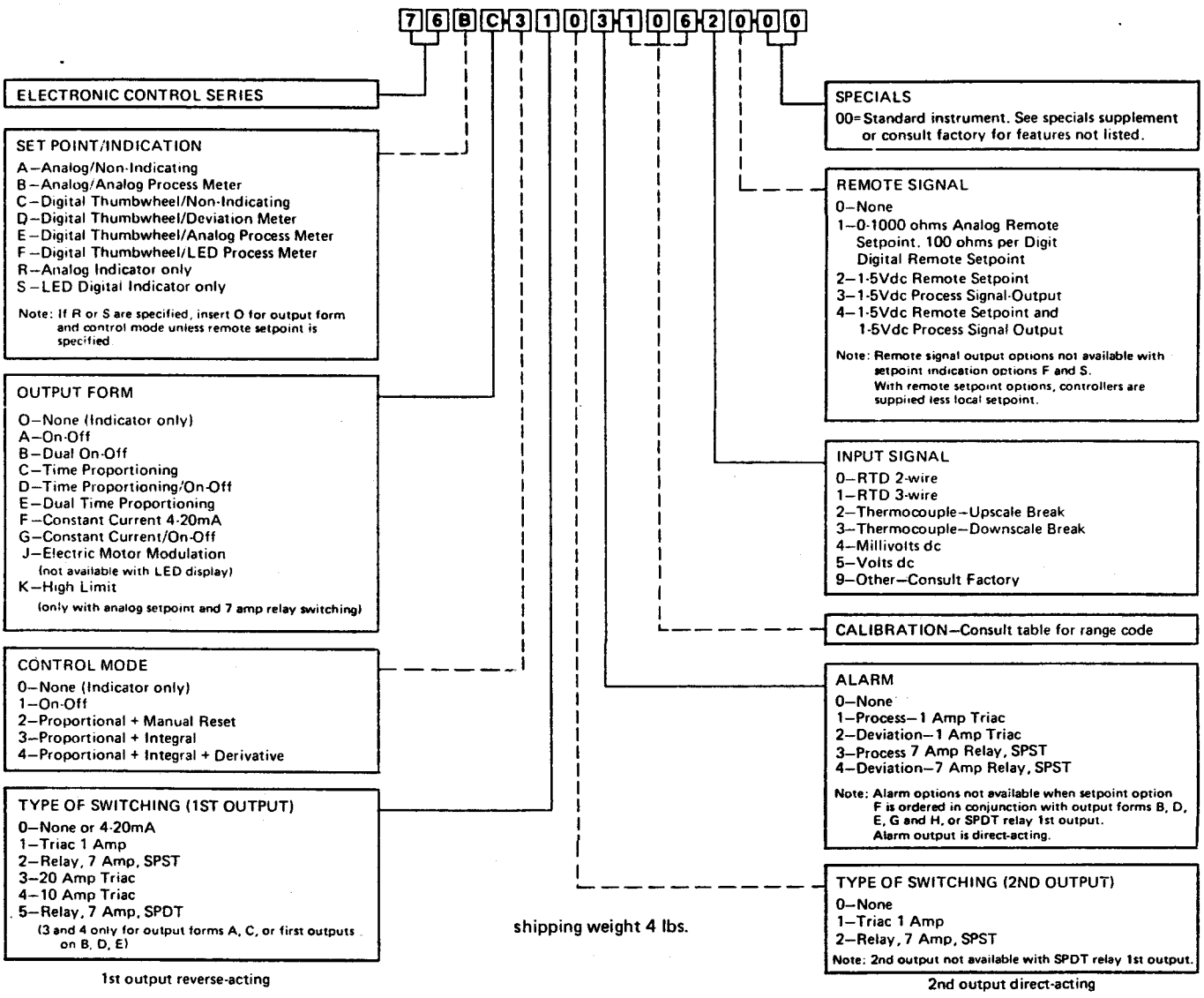

STANDARD RANGES
SERIES 76 TEMPERATURE CONTROLLER

RTD

SUFFIX	RANGE
001	–100-+100°F*
002	0-100°F
003	0-200°F
004	0-300°F
005	–50-+50°C*
006	0-600°F
007	0-60°C
009	0-200°C
010	0-300°C
011	0-400°C
012	0-400°C
013	–20-+60°C*
014	–60°-+40°C*
015	–50°-0°C*
016	–50°-+150°F*
017	–150°-+50°F*
018	0-200° F/C
020	0-600° F/C

TYPE J

SUFFIX	RANGE
101	0-200°C
102	0-400°C
103	0-400°F
104	0-600°F
105	100-650°F*
106	0-800°F
107	0-1000°F
108	100-1000°F*
109	0-500°F/C*
110	0-1000°F/C*
111	0-300°F
112	0-1200°F*
113	32-390°F/C*
114	0-600°C

TYPE K

SUFFIX	RANGE
201	0-600°C
202	0-1000°C
203	0-1200°F*
204	0-1500°F*
205	0-2000°F
206	0-2500°F*
207	0-1500°F/C*
208	0-1200°C*
209	470-1500°F*
210	0-2000°F/C*
211	0-900°C
212	0-400°C

TYPE T

SUFFIX	RANGE
301	–150-+350° F*
302	–450-+200° F/C*
303	0-200° C
304	0°-400° F
306	0-600° F

TYPE C

SUFFIX	RANGE
525	0-3000°F

TYPE E

SUFFIX	RANGE
401	0-1000°C
402	–100-+1000°C*
403	–50-+300°F*

TYPE R

SUFFIX	RANGE
501	0-3000°F
503	0-1500°C*

TYPE S

SUFFIX	RANGE
551	0-3000° F
552	0-1200° C*
553	0-1500° C*

TYPE B

SUFFIX	RANGE
**511	0-3000° F

MILLIVOLT

SUFFIX	RANGE
801	0-10mV*
802	0-50mV*
803	0-100mV
804	–5-+5mV*

MISCELLANEOUS

SUFFIX	RANGE
902	1-5Vdc/0-100 linear
905	1-5Vdc/0-200° C
907	4-20mA/0-100 linear
908	0-10mV/0-100 linear
909	0-50mV/0-100 linear
911	0-10Vdc/0-200°F linear
916	1-5Vdc/0-1000 linear

* Not available in direct-reading digital setpoint or LED. For special ranges, consult factory for availability.

** Not applicable over lower 30% of range with analog versions or over lower 40% of range with digital thumbwheel versions. Not applicable to 76EX ranges.

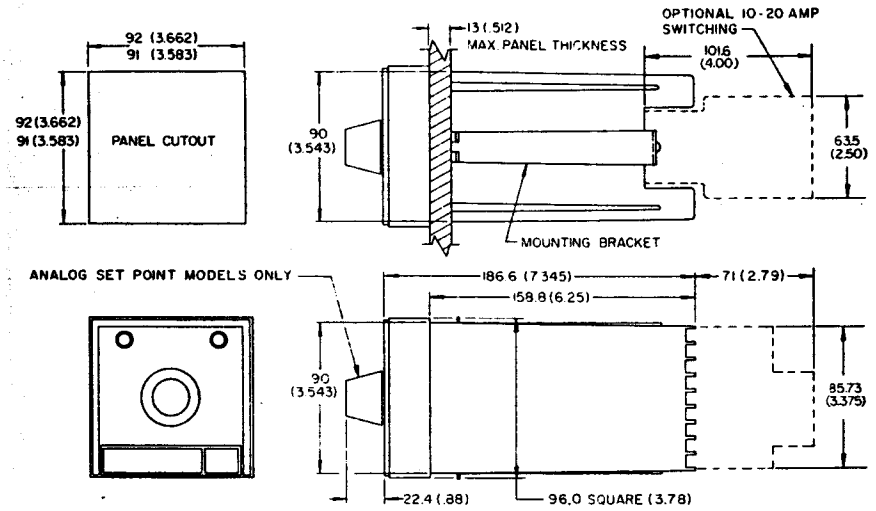

Dimensions are in Millimeters — Inches in parenthesis

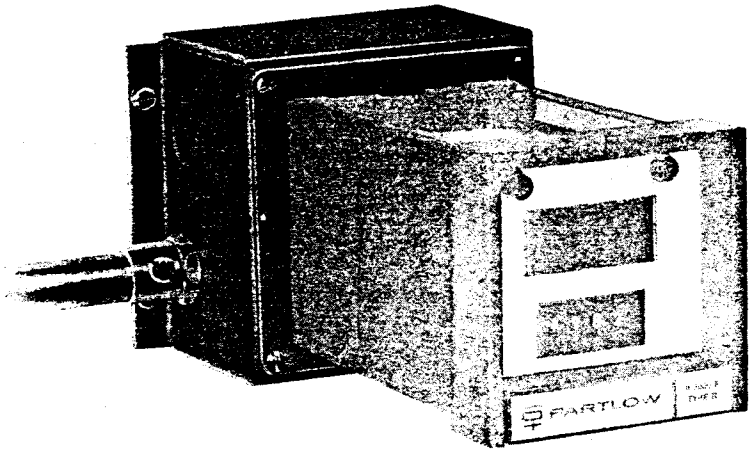

Surface Mounting Adapter **Steel stamping adapter for sturdy surface mounting of controller contains four knock-out conduit openings. Faceplate is secured to instrument before wiring, after which it is mounted to the adapter by four screws. Not available with 20 and 10 amp triac switching outputs. Part No. PPA306.**

Protective Terminal Cover

Molded plastic terminal cover provides shock protection, but permits wiring clearance. Held in place by center screw. Not available with 20 and 10 amp triac switching outputs. Part No. PPC540.

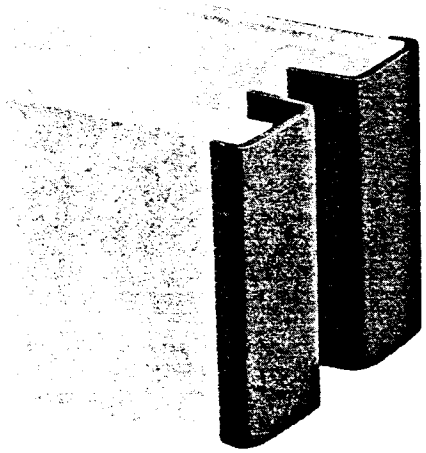

PARTLOW SALES AND SERVICE OFFICES

Conveniently Located Throughout the World

ATLANTA, GA.
Southern Combustion & Controls, Inc.
BIRMINGHAM, ALA.
Southern Combustion & Controls, Inc.
BOSTON, MASS.
KBM, Inc.
BUFFALO, N.Y.
Seelbach & Schmitt, Inc.
CEDAR RAPIDS, IOWA
Simone Engineering, Inc.
CHARLOTTE, N.C.
Allan T. Shepherd Co.
CHATTANOOGA, TENN.
Southern Combustion & Controls, Inc.
CHICAGO, ILL.
Finn & Conway, Inc.
CINCINNATI, OHIO
Glatte & Co.
CLEVELAND, OHIO
Glatte & Co.
DALLAS, TEXAS
Associated Dynamics, Inc.
DENVER, COLO.
Slaybaugh-Thompson Co.
DETROIT, MICHIGAN
Industrial Burner Systems Co.
ERIE, PA.
MAPCO Sales Co.
GREENSBORO, N.C.
Allan T. Shepherd Co.
GREENVILLE, S.C.
Allan T. Shepherd Co.
HOUSTON, TEXAS
General Instruments Co.
INDIANAPOLIS, IND.
A. B. Young Co., Inc.
KANSAS CITY, MO.
Heat Process & Control, Inc.
LOS ANGELES, CALIF.
Pacific Scientific Company
MEMPHIS, TENN.
Combustion and Controls Co., Inc.
MIAMI, FLA.
Florida Precision Instrument Corp.
MINNEAPOLIS, MINN.
Finn & Conway, Inc.
NEW HAVEN, CONN.
Etter Engineering Co., Inc.
NEW YORK, N.Y.
Alvin M. Stock, Inc.
PHILADELPHIA, PA.
Alvin M. Stock, Inc.
PHOENIX, ARIZ.
Pacific Scientific Company
PITTSBURGH, PA.
MAPCO Sales Co.
PORTLAND, ORE.
Pacific Scientific Company
RICHMOND, VA.
Allan T. Shepherd Co.
ST. LOUIS, MO.
BDC, Inc.
SALT LAKE CITY, UTAH
Control Equipment Co.
SAN DIEGO, CALIF.
Pacific Scientific Company
SAN FRANCISCO, CALIF.
Pacific Scientific Company
SEATTLE, WASH.
Pacific Scientific Company
SHREVEPORT, LA.
JDJ Sales, Inc.
TAMPA, FLA.
Thermal Equipment Systems, Inc.
BRITISH COLUMBIA
Pacific Scientific Company
MONTREAL, QUEBEC
Eclipse-Bescom Ltd. (Ltee)
TORONTO, ONTARIO
H. Anderson & Associates, Ltd.

WORLD EXPORT: Auriema International Group

THE PARTLOW CORPORATION
CAMPION RD., NEW HARTFORD, N.Y. 13413 · TELEX 93-7428

Printed in U.S.A. FORM NO. 2456 REV. 5-80 REPRINTED 12-80 10M

AIR AND CONTROL SETTINGS

All E. C. P. units of the "T", "TES" and "TOH" Series incinerators are provided with two combustion air blowers for the destruction of the waste material. (These blowers are in addition to the blowers providing the combustion air for the burners themselves.) As described previously, these two combustion air blowers are referred to as the main combustion air blower and the underfire air blower. Regardless of the type of control, i.e., manual or modulating, the following functions apply:

1 - On charging a new load of waste, the air supplied to the upper combustion chamber by the main combustion air blower must be maximized and the air supplied to the lower ignition chamber by the underfire air blower must be minimized. In practice, the minimization of the underfire air is accomplished by electrically shutting the underfire air blower off on charging waste in the case of manual type air control or by modulating the blower damper to its closed position in the case of modulating systems.

2 - Regardless of whether the air control is accomplished by manual valve or fully modulating valve controls, the following approximate values expressed in percentages of total blower capability will probably be found to apply:

AIR VALVE	DURING CHARGING	AFTER CHARGING
For Types 0, 1 and 2 Wastes:		
Underfire Air	0%	20%
Main Combustion Air	100%	80%
For Type 4 (Pathological Wastes):		
Underfire Air	0%	0%
Main Combustion Air	100%	70%
For Type 6 (Plastics, Rubber and Other Synthetic Materials):		
Underfire Air	0%	10%
Main Combustion Air	100%	100%

AIR AND CONTROL SETTINGS

Regardless of the type of material that is being incinerated, the following general comments may be made:

1 - Leakage of smoke around the charging door is indicative of a positive pressure in the lower incinerator chamber. This could be due to too much underfire air or loading of a readily combustible (highly volatile) material at too high a rate. Underfire air valve setting should be checked.

2 - Appearance of black smoke from the stack indicates a shortage of combustion air in the upper chamber or possibly too much underfire in the lower chamber. Black smoke may also result with some materials as a result of too low a temperature in the upper chamber or main burner flame failure. Check to make certain that the underfire air is minimized on charging and that the main combustion air to the upper chamber is maximized. Check high set-point of upper chamber temperature controller to make certain temperature is high enough for waste being incinerated.

3 - Appearance of white smoke (not water vapor) from the stack could indicate too much air into the upper chamber causing a premature cooling of the gases or a possible entrainment of residue from the lower chamber due to excessive underfire air settings. White smoke may also be indicative that one of the problem materials described elsewhere in this manual is present in the waste.

4 - Appearance of visible fly ash from the stack is normally a sign of too much underfire air.

AIR AND CONTROL SETTINGS

The determination of the proper upper Temperature Controller set point for clean burning will normally be determined from experience. The following range will probably be found to apply:

Material	Upper Chamber Temperature Controller Settings:
	(Upper Setpoint)
Cellulosic derivatives	1600° - 1800°F.
Synthetics, plastics, rubber	1800° - 2000°F.
	(Lower Setpoint)
All materials	1000° - 1200°F.

MODULATING TEMPERATURE, BURNER AND AIR CONTROLLERS

Incinerator circuits provided with modulating flameport air, modulating underfire air and/or modulating main burner utilize a Partlow Series 76 Solid State Temperature Controller to accomplish the modulation function. These controllers utilize temperature as a direct indication as to whether or not more or less air needs to be admitted to accomplish a desired controlled temperature level. The output signal of the above Partlow Controller drives a Honeywell M744A Electronic Modutrol Motor with top mounted 24 volt transformer. The M744A proportional motor is mechanically linked to a butterfly-type air valve which automatically throttles the air flow to accomplish the above functions. In the case of modulating burners, the air valve mentioned above is further cross linked to a fuel-air ratio regulator which varies the fuel flow with variation in combustion air flow to the burner.

The following discussion will explain further the details of the Partlow Series 76 Controller and the necessary interrelated setpoints of these controllers.

Special High Setpoint Considerations For Units Equipped With Modulating Main Burner And Modulating Flameport Air

As explained above, the control variable for modulation systems is the combustion gas temperature. In the case of incinerators equipped with modulating flameport air and modulating main burner, the upper chamber temperature serves as the control variable for each case. Obviously, it would be undesirable for the burner circuit to be calling for high fire when at the same time the flameport air circuit may be calling for more combustion air to effectively lower the temperature to a lower control point. It can readily be seen that the proper control setpoint for the flameport air must be made with due consideration for the control setpoint and modulation setpoint for the upper burner. Without consideration of this interdependency, conditions may exist where one modulating function is tending to defeat the purpose of

the other modulating function and/or limit control. The schematic representation on the following page will illustrate the proper relative settings for these controllers when using the same control variable, namely, upper chamber temperature.

Modulating Underfire Air

So far we have addressed our discussion to the modulation controls which utilize the temperature in the upper chamber, namely, modulating flameport air and modulating main burner(Ignition burners are usually not modulated due to the relative short period of usage during the total burn cycle and are of the on-off type operation).

Modulating underfire air controllers utilize the temperature in the lower chamber. These systems use the same Partlow 76 Series Controller with the Honeywell M744A Modutrol as described above. The proper setpoint for this controller is not as critically interrelated however to the other controllers as was the case above with the upper chamber controllers. The modulating setpoint for the underfire air controller should be set as low as possible and still achieve a satisfactory burndown of the residue. This setpoint will generally be in the range of 1800 - 2000°F. In no case should this setpoint exceed 2300°F. A review of this setting is shown below.

Further details on operation, adjustment and trouble shooting for the Partlow Controller and Honeywell M744A are given on the following pages.

Underfire Air
Modulation
Controller

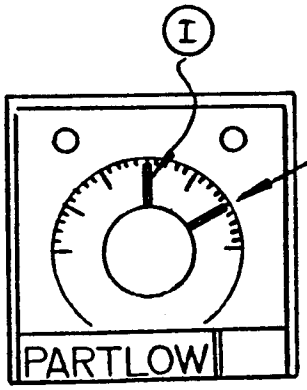

Setpoint = 1800 - 2000°F normally. Set low as possible consistent with satisfactory burndown. In no case should this setting exceed 2300°F.

(I) (Black) = Indicated Temperature
(Red) = Setpoint

INTERRELATIONSHIP OF SETTINGS FOR MODULATING CONTROLS

Upper Chamber Operating Temperature Controller

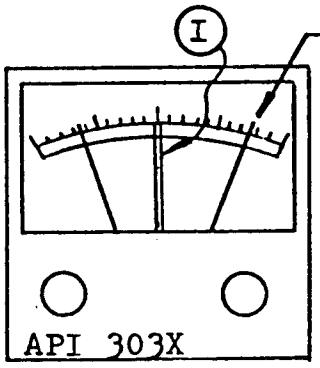

T_H = High setpoint required for clean burning in upper chamber, i.e.,

Cellulosic Materials = 1600 - 1800°F.

Synthetic Materials = 1800 - 2000°F.

Main Burner Modulation Controller

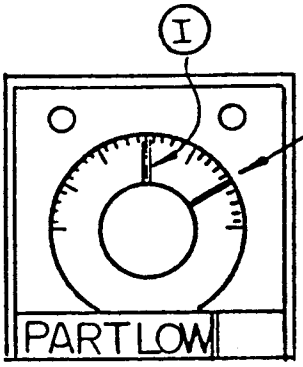

Setpoint for burner modulation = T_H - 100°F.

Flameport Air Modulation Controller

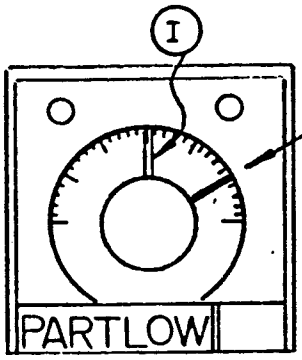

Setpoint for flameport air modulation = T_H + 100°F.

Upper Chamber High Limit Temperature Controller

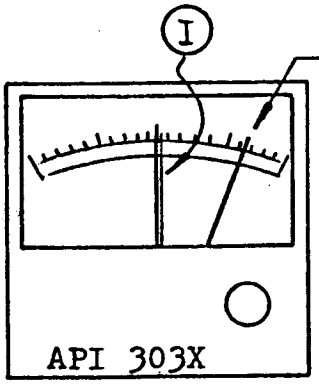

Setpoint for upper chamber high limit safety = T_H + 150°F or lower but in no case should this setpoint exceed 2300°F.

(I) (Black) = Indicated Temperature
(Red) = Setpoints

MAINTENANCE

GAS PILOT ADJUSTMENT FOR NORTH AMERICAN TYPE BURNERS

Depending on local atmospheric conditions and dirt factors, it will be necessary to adjust burner pilots occasionally. In that this adjustment requires jumpering of electrical terminal connections, it is recommended that only qualified electricians attempt to make pilot adjustments. Familiarity with the E. C. P. Electrical Drawing supplied with this equipment is required for energizing the pilot ignition transformer and pilot solenoid gas valve. The electrical schematic applicable to this equipment is E. C. P. Drawing No._____.

Adjustments of the gas pilots are made as follows:

1 - Set incinerator temperature controllers as follows:

For starting pilots(s) of main burner (s):

Upper Chamber Temperature Controller:

Low Set - 1000°F High Set - 1500°F

Lower Chamber Temperature Controller:

Low Set - 0°F High Set - 2000°F

For starting pilot(s) of auxiliary (ignition) burner (s):

Upper Chamber Temperature Controller:

Low Set - 0°F High Set - o°F

Lower Chamber Temperature Controller:

Low Set - 1000°F High Set - 2000°F

2 - Open the inlet orifice adjustment screw found on the side of the pilot mixer (Refer to Pilot Piping Sketch on the following page).

3 - Remove flamerod (or U. V. scanner in the case of oil fired burners with gas pilots) from the burner block. (Do <u>not</u> remove spark plug from pilot blast tip.)

4 - Start unit and allow the burner to attempt to fire and trip out the flame safeguard relay.

MAINTENANCE

NORTH AMERICAN BURNERS

GAS PILOT ADJUSTMENT

5 - Remove the Plug-In Purge Timer Card from the Honeywell 4795D Flame Safeguard Primary Control (Refer to Sketch below for identification).

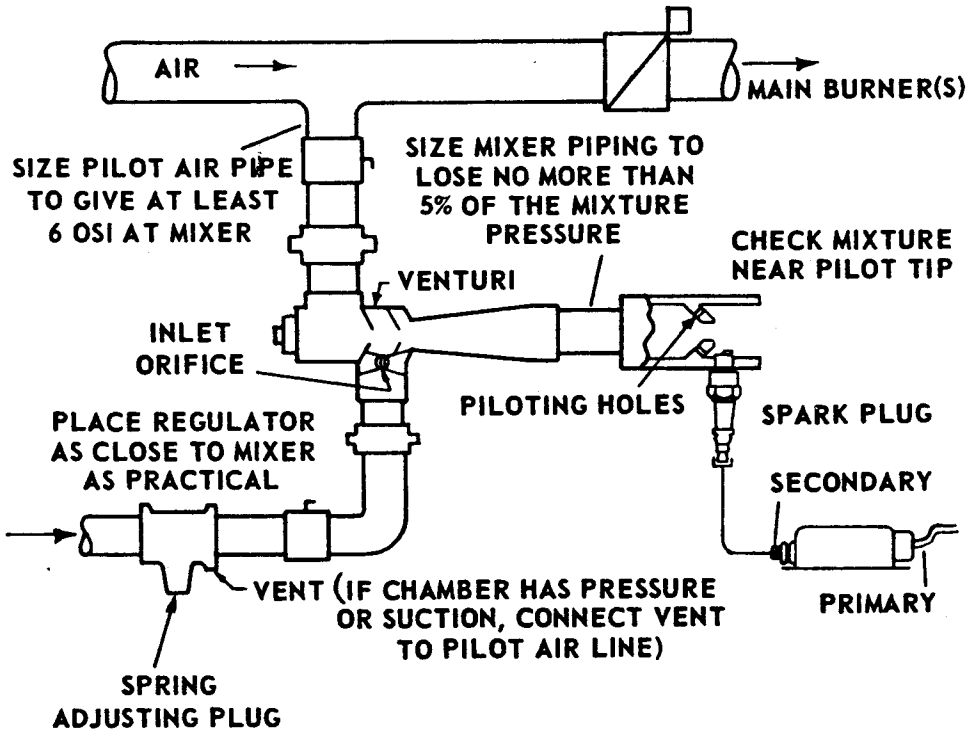

PILOT PIPING

The two most common causes of pilot problems are undersized piping and plugging from dirt in the lines.

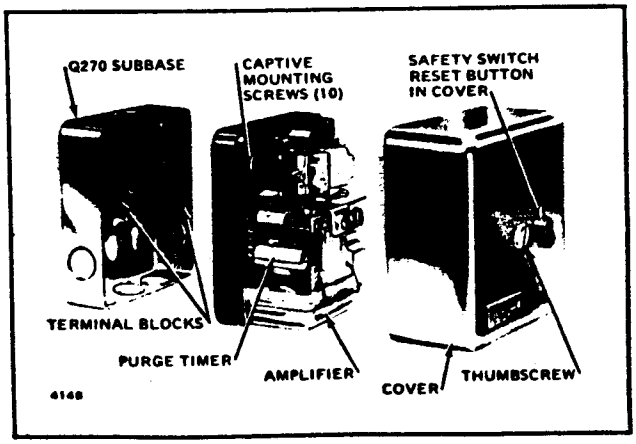

R4795 AND Q270 SUBBASE

6 - So as to electrically energize the pilot solenoid gas valve and ignition transformer, jumper the following electrical lines on the terminal strips inside the incinerator control panel:

For Main Burner No. 1, jumper_____to_____.
For Main Burner No. 2, jumper_____to_____.
For Ignition Burner No. 1, jumper_____to_____.
For Ignition Burner No. 2, jumper_____to_____.
For Ignition Burner No. 3, jumper_____to_____.
For Ignition Burner No. 4, jumper_____to_____.

NOTE: Main Burner No. 2 is only supplied on larger units. Ignition Burners No. 2, 3 and 4 are only supplied on larger pathological units. The designation "NA" above indicates these options are not furnished on the equipment described herein.

7 - After the pilot solenoid gas valve and ignition transformer for the burner pilot in question have been energized, look through the flamerod port (or U. V. scanner port in the case of oil burners with gas pilots) and adjust the inlet orifice screw on the pilot mixer for best pilot flame. DO NOT LEAVE JUMPER CONNECTED FOR LONGER THAN ONE (1) MINUTE, THEN ALLOW SAFEGUARD TO COOL FOR TWO (2) MINUTES. Once the pilot has been adjusted and set, recycle the pilot several times (with the electrical jumper) to check the pilot flame.

8 - Remove the jumper from both terminals. Replace flamerod and lead (or U. V. scanner) into the burner block. Replace the Plug-In Purge Timer Card and press the safety switch reset button (red button located on the face of the Honeywell R4795D Flame Safeguard Primary Control) on the flame relay inside the control panel and allow burner to start. Make very slight adjustments to the inlet orifice adjustment screw on the pilot mixer valve if necessary.

9 - Reset upper and lower chamber temperature controllers for normal operation.

One of the most commonly encountered problems with the gas pilots will be the result of instability due to the fouling of the blast tip inspirator orifices. To avoid this it is recommended that the pilot blast tips be removed from the burner blocks at least once a month or more often depending on local conditions and cleaned by blowing a stream of compressed air through the blast tip orifices.

The adjustments described above can best be accomplished by two men working together, i. e., one man observing the pilot through the burner block and making adjustments while the second man makes the electrical jumpers at the terminal strip. Again it is stressed that only qualified electricians or mechanics make these adjustments and that they be completely familiar with the electrical schematics for this equipment.

Additional trouble shooting information for gas-fired pilots is given on the following pages.

TROUBLE SHOOTING PILOTS-SPARK IGNITION

SYMPTOM: PILOT WILL NOT LIGHT:

A - Cause: No spark across the electrode gap.

Cures:
1. A 6000 volt transformer is usually recommended.
2. Only one spark electrode at a time can be operated by a single pole trahsformer.
3. There must be a metallic ground connection between transformer case and pilot tip.
4. Remove ignition lead from electrode. Check spark from ignition lead to ground. Spark should jump at least 1/8 inch.
5. If #4 shows good spark, reset gap to about 3/32 inch, clean or replace spark plug, or remove foreign matter from pilot tip.

B - Cause: No spark at electrode.

Cures:
1. Remove ignition lead from transformer and check for spark from secondary terminal of transformer to ground.
2. If this spark is okay, install new ignition lead.

C - Cause: No spark at transformer.

Cures:
1. Check for power to primary of transformer.
2. If voltage is okay, install new transformer.
3. If no power, correct power supply.

D - Cause: Piping.

Cures:
1. Be sure piping between mixer and tip is full or over-size depending on length and number of fittings.
2. Be sure piping from regulator is unrestricted and has no leaks.
3. Be sure system has proper gas supply regulators.
4. Be sure regulator vents are cross-connected to the pilot air line if combustion area has pressure or suction.
5. Be sure mixer and tip are properly matched.

TROUBLE SHOOTING PILOTS-SPARK IGNITION

SYMPTOM: PILOT WILL NOT LIGHT:

E - Cause: Plugging.
Cures: 1. Disconnect gas line to mixer. Blow into regulator vent opening or, screw adjusting plug up to open regulator (note original position).
2. Remove plug from back of mixer and use opening to check air pressure. It should be 6 to 12 osi.
3. If gas flows, return adjusting plug to original position. Check venturi orifices for fuzz, pipe scale or cuttings. Venturi must be unobstruced.
4. Remove pilot tip and check piloting holes for foreign matter or burrs.
5. Turn on air to the pilot mixer. If the suction on the pilot gas connection is not as great as specified in the pilot bulletin, remove gas piping from mixer and check inlet orifices for scale, chips or oil.

SYMPTOM: PILOT LIGHTS BUT BLOWS OUT EASILY:

A - Cause: Too much air through lighting hole.
Cures: 1. On 4024M and 4025M pilot tips, close lighting hole cover before turning up main burner air.

B - Cause: Flame too rich.
Cures: 1. Low air pressure.
2. Dirty venturi in mixer.
3. Regulator spring screwed up too far (with pin-type mixers only).
4. Gas adjustment on venturi mixer open too far.
5. Gas orifice in "pin" mixer too large.
6. Large capacity tip on small capacity mixer.
7. High suction in combustion area—cross-connect the pilot regulator to the pilot air line.

TROUBLE SHOOTING PILOTS-SPARK IGNITION

SYMPTOM: PILOT LIGHTS BUT BLOWS OUT EASILY:

C - Cause: Fluctuating gas pressure.

Cures: 1. If gas supply pressure fluctuates rapidly due to chattering regulator, the pilot will be unstable. To remedy chattering, remove dirt from the pilot regulator's valve seat. If the seat is damaged, replace the pilot regulator.

2. If chattering persists, substitute a smaller pilot regulator if possible.

SYMPTOM: PILOT FLAME DOES NOT ENERGIZE FLAME MONITORING DEVICE:

A - For all types of flame monitoring devices:

Cures: 1. Adjust the pilot for a sharp, forceful, blue-white flame that has a "gentle roar". Beware of lazy, floating, drifting, yellow, violet-tipped, green-tipped, or quiet pilot flames—signs of incorrect pilot air/gas ratio.

2. On burners with high main air spin, if the spin is pushing the pilot flame away from the flame monitoring device, interchange positions of the device and the pilot.

B - For rectification type flamerod:

Cures: 1. Pilot too rich causing too much flame on rod, or causing flame to leave pilot tip and lose electrical ground. Best signal will be obtained if the ground area in contact with flame is four times the rod area in contact with flame.

2. Wrong length flamerod.

3. Pilot too small. Does not contact flamerod. More air pressure probably needed.

4. Too much combustion air pressure blowing flame away from rod.

TROUBLE SHOOTING PILOTS-SPARK IGNITION

C - For ultraviolet cell and lead sulphide cell:

Cures: 1. Pilot flame too small to reach field of vision. Probably needs more pilot air pressure.

2. Too much combustion air pressure blowing flame out of field of vision.

D - For lead sulphide cell:

Cures: 1. Pilot flame too blue and steady. To be sensed, the flame must have some flicker. A richer pilot flame or raw gas added near pilot may correct this condition.

MAINTENANCE AND SERVICE

INSPECTION:

Air Ports - Inspect all air ports, especially the underfire air ports, frequently. Keep underfire air ports clean and free of clinker build-up and pluggage. On all "T", "TES" and "TOH" Series units, the underfire air pipes may be rodded from the outside while the unit is in operation by slowly removing the external pipe caps or the individual underfire air manifold covers. These should be cleaned one at a time. Precaution should be observed by performing this operation with a safety shield in case of fire flash back.

Vessel and Stack - Note surface condition of all "hot" surfaces. Any white spot or discoloration may indicate loss of refractory inside and should be followed by an immediate inspection. Should refractory damage be present, refer to the Refractory Sections in this manual for repair procedures.

Control Panels - Keep enclosure, lights, switches and other components clean. Keep panel securely closed unless a change in programming is desired. These changes should be made only by an experienced electrician, familiar with the control and electrical interlock circuitry of the incinerator.

Fuel Trains and Burners - Keep free from any build-up of dirt and ashes. Refer to individual instruction sheets for specific components. Keep vent ports clean on all valves, regulators and safety switches. On oil fired burners, periodic checking and removal of any carbon build-up should be observed. Investigate for sources of fuel leakage as required.

Refractory - Refer to the Refractory Sections within this manual. Reasonable care will insure a useful life for the refractory. The refractory contained within your unit represents one of the most expensive components and should be treated with respect. Avoid subjecting the refractory to any rapid changes of temperature, undue abrasion or physical shock. When manually cleaning the interior of the incinerator, avoid using pointed tools or physical shock. Do not hit or gouge the refractory. Never spray water onto a hot refractory surface. Inspect the upper combustion chamber at least twice a year and vacuum out any loose fly ash that may have accumulated on the floor area. Avoid charging large amounts of any inorganic material into the incinerator. This material will not combust but will greatly increase the clinker forming tendencies in the lower chamber and may result in refractory contamination with subsequent damage.

MAINTENANCE AND SERVICE

INSPECTION, Continued

Ram Feeders - Keep ram housing and loader chambers free of grease and dirt build-up. Frequently inspect ram casters and tracks for cleanliness. Ram feeders and hatch covers and automatic incinerator charging doors are energized by various limit switches. These switches should be inspected frequently for proper adjustment and operation. Adjustments of any limit switch should be done only by a qualified electrician familiar with the control circuitry of the incinerator. Maladjustment of these switches may cause severe mechanical damage.

Ash Removal Conveyors - For units having wet-ash removal systems, bearings that are located beneath water should be lubricated bi-weekly with a general purpose or water resistant lubricant. Lube fittings are extended from bearing to above water level for easy access. Check chain tension daily and adjust slack as required by take-up bearings or idler units as applicable.

LUBRICATION SCHEDULE:

1 - All swing latches and hinges	- Weekly
2 - Upper door support pins for all Top Loader Incinerators	- Weekly
3 - Ash removal conveyor bearings	- Bi-Weekly
4 - SM Cyclo Drive Gear Reducer lubricant level	- Check Monthly - Replace Yearly
5 - All chains - brush off and lubricate with Dow Corning Molykote 321 or equivalent	- Six (6) Month - Intervals
6 - All mechanical clevis attachments, i.e., at hydraulic cylinder attachments to moving components (doors, hatches, rams, etc.)	- Monthly
7 - Most motors and packaged blowers are supplied with sealed bearings and therefore require no lubrication. Exceptions to this are larger combustion air blowers and I. D. fans on heat recovery units. Examples are Chicago Blower Series SQA, SQI and LS. These blowers require lubrication monthly with Texaxo Molytex #2 or equivalent.	
8 - Ram feeder carriage wheels	- Weekly

MAINTENANCE AND SERVICE

A Darmex Grease Selector for different temperatures, speeds and ambient conditions is included on the following pages to assist in various grease selections for your convenience.

DARMEX®

1295 NORTHERN BLVD.
MANHASSET, L.I., N.Y. 11030 - USA
Telephone: 212-528-5800 • 516-627-1515
TELEX: 14-4520
Watts: 800-645-8270—OUTSIDE N.Y. STATE

GREASE SELECTOR

CONTAMINATION RESISTANCE
● HIGHLY RESISTANT
○ SATISFACTORY RESISTANCE

DARMEX® GUARANTEED PERFORMANCE SERVICE

PRODUCT	NLGI NO	MIN. OPERATING TEMPERATURE (CONSTANT) °F	MIN. OPERATING TEMPERATURE (CONSTANT) °C	MAX. OPERATING TEMPERATURE (CONSTANT) °F	MAX. OPERATING TEMPERATURE (CONSTANT) °C	COLOR	MAXIMUM BEARING SPEED RPM	WATER	HOT WATER	STEAM	MILD ALKALIES/ACIDS	CONC. ALKALIES/ACIDS	DETERGENTS	SOLVENTS (HIGH CONC.)	SOLVENTS (MILD CONC.)	SAND & GRAVEL	SALTS, CALCIUM H CHLORIDE	OXYGEN		
707	2	−20	−30	600	315	Light Brown	10000	●	●	●	●	○	●	○	●	●			707	Non melting, anti-wear grease, for med/high speed high temperature bearings. Non carbonizing, non hardening.
711	2	−40	−40	750	400	Gray Black	1800	●	●	●	●	○	○	○	●	●	○		711	Non melting, wide temperature range. High metallic solid concentration for extended lube cycles.
AA50	1	−25	−30	350	180	Dark Gray	1800	●	●	●	●	○	●	○	●	●	○		AA50	Non melting, excellent anti-seize, MOS_2 protects metal corrosion and wear. Non carbonizing. No residue formation.
AA75	2½	−50	−45	850	455	Dark Gray	100	●	●	●	●	○	●	○	●	●	○		AA75	Extreme pressure, 70% metallic content. Silicon base fluid for superior high/low temperature performance. Unlimited speed on frictional surfaces.
AA100	2	−75	−60	750	400	Dark Gray	80	●	●	●	●	○	●	○	●	●	○		AA100	The all purpose anti-seize compound for extreme pressure lubrication within its temperature range. 60% solids with 200,000 P.S.I. film protection. No speed limitation on frictional surfaces.
AA200	4	−35	−35	600	315	Dark Gray	---	●	●	●	●	○	●	○	●	●	○		AA200	Paste-like, EP compound. 3000 RPM limit on frictional surfaces and 200,000 P.S.I. film protection. Over 65% metallic solids for superior anti-wear protection. Excellent for equipment assembly/disassembly applications.
AA2000	1	−10	−25	1.800	985	Dark Brown	50	●	●	●	●		●		●	●			AA2000	Non melting, over 55% of bronze like metallic solids to assure metal to metal separation at high temperatures. Non carbonizing, no residue buildup.
123LT	1½	−65	−55	225	110	Clear Amber	5000	●	○	○									123LT	Low temperature bearings subject to moisture buildup. Refrigeration equipment, sub zero applications.
MG2LT	1½	−40	−40	325	165	Dark Gray	6000	●	●	●	●	○	●	○	●	●	●		MG2LT	Contains MOS_2 for low temperature applications, automotive, industrial and construction equipment. summer/winter lube.
G65LT	0-1	−50	−45	230	110	Light Amber	8000	●	●	○									G65LT	Excellent antiwear, rust, oxidation and moisture protection. High speed.
G100LT	0-1	−100	−75	150	65	Light Amber	8000	●	○	○									G100LT	Extreme low temperature applications. Moisture and water resistant.
NTG	2	0	−20	300	150	Colorless Transparent	2000	○	○				○		○				NTG	Non-melting. Superior protection in food, cosmetics, pharmaceutical equipment. USDA accepted, "AA" rating, meets FDA Reg. 178.3570.
NTG-1	0-1	−20	−30	300	150	Colorless Opaque	4000	●	●	●			○		○				NTG-1	Superior in food, cosmetic, pharmaceutical high speed equipment. USDA accepted, "AA" rating, meets FDA Reg. 178.3570.
NTG-1 Grade 2	2	−10	−25	325	165	Colorless Opaque	2000	●	●	●			○		○				NTG-1 Grade 2	Same as above for slower moving equipment.
SR33	2	10	−12	250	120	Off White	1800	●	○	○	●	●		●	●		●		SR33	Highly contaminated areas in the chemical, textile and other industries. Non-melting.
EC2	2	0	−20	350	175	Dark Gray	1750	●	●	●	○	○	○		○	○	○		EC2	Electric conductive grease. Superior metal adherence.
OR2	2	−40	−40	375	190	Off White	2000	○	○	○								●	OR2	For all areas where oxygen could result in an explosion hazard.
RCG	2	−10	−25	300	150	Brown	200(	●		●	○	○	●	○	●				RCG	Rubber compatible for areas where a conventional grease would attack rubber, natural or synthetic.

ADDITIONAL SERVICE CHECKS

1 - Clean all blower intakes weekly.

2 - On systems with heat recovery I. D. fans, clean I. D. fan housing weekly.

3 - Clean spark ignitors on burners monthly.

4 - Clean flame rods or U. V. Scanner flame sensors weekly (more often in dusty atmospheres.)

5 - On hydraulic systems, check level of hydraulic fluid by observing the level gauge on the side of the hydraulic fluid reservoir. If the fluid level is below the "LOW" mark, add additional fluid as required. Replacement fluid should be Houghto-Safe as described separately under the Hydraulics Section if applicable. CAUTION - Severe damage can result to hydraulic seals if other hydraulic fluids are substituted.

TABLE OF CONTENTS

OP-5
INSTALLATION AND OPERATION

Section	Title	Page
5.0	General	OP-5-1
5.1	Installation	OP-5-2
	.1) Site Preparation	OP-5-2
	.2) Unloading	OP-5-3
	.3) Assembly of Equipment	OP-5-5
5.2	Pre-Start Procedures	OP-5-7
	Loader Pre-Start Checks	OP-5-8
	Loader Safety Precautions	OP-5-10
	Incinerator Pre-Start Checks	OP-5-12
	Incinerator Safety Precautions	OP-5-20
	Refractory Curing	OP-5-21
	Ash Conveyor Pre-Start Checks	OP-5-23
	Ash Conveyor Safety Precautions	OP-5-25
	Cooling System Pre-Start Checks	OP-5-26
	Cooling System Safety Precautions	OP-5-29
	Hydraulic Power System Pre-Start Checks	OP-5-30
	Hydraulic Power System Safety Precautions	OP-5-30
5.3	Operating Instructions	OP-5-31
	.1) Start Up and Operation Sequence	OP-5-32
	.2) Normal Operation	OP-5-35
	.3) Batch Operation of CS Units	OP-5-36
	.4) Normal Shutdown	OP-5-36
	.5) Emergency Shutdown	OP-5-37

Exhibit #21

PERFORMANCE GUARANTEES

Emissions guarantees are provided for those items which can be controlled by the system supplied. In cases where emission control systems are designed, manufactured, and supplied by others, the guarantees from the manufacturer is applicable.

The guarantees here are based on the waste stream as described in the specifications and the systems being operated and maintained in accordance with the manufacturers' instructions. The guarantees will be demonstrated during the test period, as applicable.

The base system performance guarantees are:

Throughput	2,000 lbs/hr @ 8 hrs/day charging basis.
Particulate Emissions	0.015 gr/dscf corrected to 7% O_2, EPA Method 5, front catch.
Hydrogen Chloride	90% removal of 50 ppmdv corrected to 7% O_2, whichever is least restrictive.
Sulfur Dioxide	50% removal or 30 ppmdv corrected to 7% O_2, whichever is the least restrictive.
Metals	Least stringent of 90% removal or mass number listed:
• Arsenic	0.051 lbs/hr
• Beryllium	0.090 lbs/hr
• Cadmium	0.12 lbs/hr
• Mercury	See note
Carbon Monoxide	50 ppmdv corrected to 7% O_2.

The guarantees are taken from the requirements listed in the specification except for the mercury. Since the control efficiency for mercury is low for typical emissions control systems and the inlet concentration is not known, this emission cannot be defined.

However, the allowable limit listed in the specification of 0.29 lbs/hr is substantially greater than is typically emitted from medical waste incinerators. The limit is not believed to present a problem with the waste stream described in the specifications. Recent work by the USEPA and others indicate that the addition of activated carbon to the dry scrubber sorbent provides a mercury removal efficiency in the 80% range. This type of system is available from Consumat Systems if the waste stream mercury content is greater than anticipated and additional removal is desired.

WARRANTIES AND GUARANTEES

Consumat Systems, Inc. warrants and guarantees the following:

1. To deliver clear title to Purchaser, free of all liens and encumbrances.

2. Consumat Systems, Inc. agrees to correct any defect in material and workmanship of any equipment furnished by it to purchaser which may develop under normal and proper use (erosion and corrosion excepted) within one year of the date of invoice of said equipment by repairing the defective part or parts or by replacing the same, F.O.B. job site, air freight and/or special handling not included. *Any equipment not of Consumat Systems' design or manufacture is sold only under the regular guarantee and responsibility of the maker, and is guaranteed by Consumat Systems only to such extent.* There is no warranty on the following parts:

Thermocouples	Electrodes	Drive Belts
Thermocouple Elements	Auto Pilots	Filters
Thermocouple Protecting Tubes	Seal Kits	Ignitor Rods
Flame Rods	Light Bulbs	Ignitor Plugs
U.V. Sensors	Gasketing	Glass assemblies or sub-assemblies
Cadmium Cells	Ignition Wire Assemblies	Spark Plugs

Provisions and Exceptions:

1. Consumat Systems will not be liable for any charges incurred by Purchaser or for its account in correcting defects in the equipment unless authorized by Consumat Systems in writing.

2. Consumat Systems will not be liable for any consequential damages, loss, or expense arising from any change in or any alteration to equipment of its manufacture, such changes or alterations having been made by any person or persons other than personnel of Consumat Systems, Inc. or its agents, in which event such agents must have written permission of Consumat Systems, Inc. prior to making such change or alteration.

3. Consumat Systems' warranties *do not cover parts damaged due to misuse, abuse, misapplication or lack of maintenance.* Consumat Systems will not be liable for any incidental or consequential damages, loss, or expense arising in connection with the use of, or inability to use, its equipment for any purpose whatsoever. Consumat Systems' liability under no circumstances will exceed the contract price for the goods claimed to be defective.

THE ABOVE ARE CONSUMAT SYSTEMS' SOLE WARRANTIES AND GUARANTEES, AND THE REMEDIES SET FORTH ABOVE CONSTITUTE PURCHASER'S EXCLUSIVE REMEDIES IN THE EVENT SUCH WARRANTIES ARE BREACHED. WITH RESPECT TO THE CONSTRUCTION AND MECHANICAL FUNCTION OF ITS EQUIPMENT, CONSUMAT SYSTEMS MAKES NO OTHER WARRANTIES OR GUARANTEES OF ANY KIND WHATEVER, AND THESE WARRANTIES AND GUARANTEES ARE IN LIEU OF ALL OTHER WARRANTIES OR GUARANTEES, WRITTEN OR ORAL, STATUTORY, EXPRESS OR IMPLIED, INCLUDING WITHOUT LIMITATION THE WARRANTY OF MERCHANTABILITY AND THE WARRANTY OF FITNESS FOR A PARTICULAR PURPOSE.

CONSUMAT SYSTEMS, INC.
P.O. Box 9379, Richmond, Virginia 23227

12/86

TABLE OF CONTENTS

OP-1
FACILITY DESCRIPTION

Section	Title	Page
1.1	Facility Systems	OP-1-1
1.2	Specifications	OP-1-5
Fig. 1-1	Consumat Module Illustration	OP-1-3
Fig. 1-2	Consumat Module Cutaway View	OP-1-4

1.1 FACILITY SYSTEMS

The incinerator / air pollution control system provided for this facility is designed to process waste at a rate of 2000 lbs/hr, for 8 hours per 24 hours; or 1,680 lbs/hr continuously, based on a BTU content of 7,500 Btu/Lb. The major components manufactured by Consumat Systems, Inc. include:

(1)	CS-760-2	Incineration System
(1)	ML-561	Loader
(1)	AR-4284	Ash Remover
(1)	AC-48	Ash Conveyor
(1)	96" O.D.	Quench Chamber

The facility consists of a number of integrated systems each providing a specific function which is required to fulfill the overall design intent of the facility. Major systems which are included within the Consumat Systems, Inc. scope of supply are as follows:

- Waste Incineration System
- Incinerator/Loader/Ash Conveyor Hydraulic Systems
- Incinerator/AQCS Instrumentation and Control System
- Incinerator Cooling System
- Flue Gas Quench System
- Air Quality Control System
- Flue Gas Handling System
- Incinerator / AQCS Compressed Air System

Additional equipment necessary to complete the overall system is to be furnished by others. This includes the reagent feed system, PC based control monitoring, main exhaust stack and continuous emission monitoring systems.

1.1 FACILITY SYSTEMS

A thorough understanding of the function, operation, and maintenance of each system is required for successful, long term operation of the system. The integration of all systems forms the basis for the success of the total unit in achieving cost effective, environmentally sound, and efficient processing of solid waste materials.

Figure 1-1 identifies the various components of a standard CS-Model unit with energy recovery and dry scrubber baghouse pollution control system. Figure 1-2 is a cutaway view which briefly depicts the combustion process.

The general description and layout of major equipment is shown in the General Arrangement Drawing D-04C-0128 Sheets 1-3. A detailed description of each system and its integration within the Consumat Systems equipment package is contained in Section OP-3, EQUIPMENT DESCRIPTIONS, and Section OP-4, INSTRUMENTATION AND CONTROL SYSTEM. Further understanding of the equipment interaction is detailed in the P & ID drawings D-04J-0052 Sheets 1-7. The operator should review and understand the basic information included in these drawings. A good understanding of the overall integration of the system is necessary.

Specific information relative to major purchased components used in the manufacture of the incinerator, loader and ash removal components, can be found in **VOLUME II - MANUFACTURERS' LITERATURE.**

While some reference to the air quality control system (AQCS) is included in this volume, detailed technical descriptions, maintenance and control information provided by the manufacturer are included in **VOLUME III - MANUFACTURERS' LITERATURE.**

The Consumat® Modular Systems

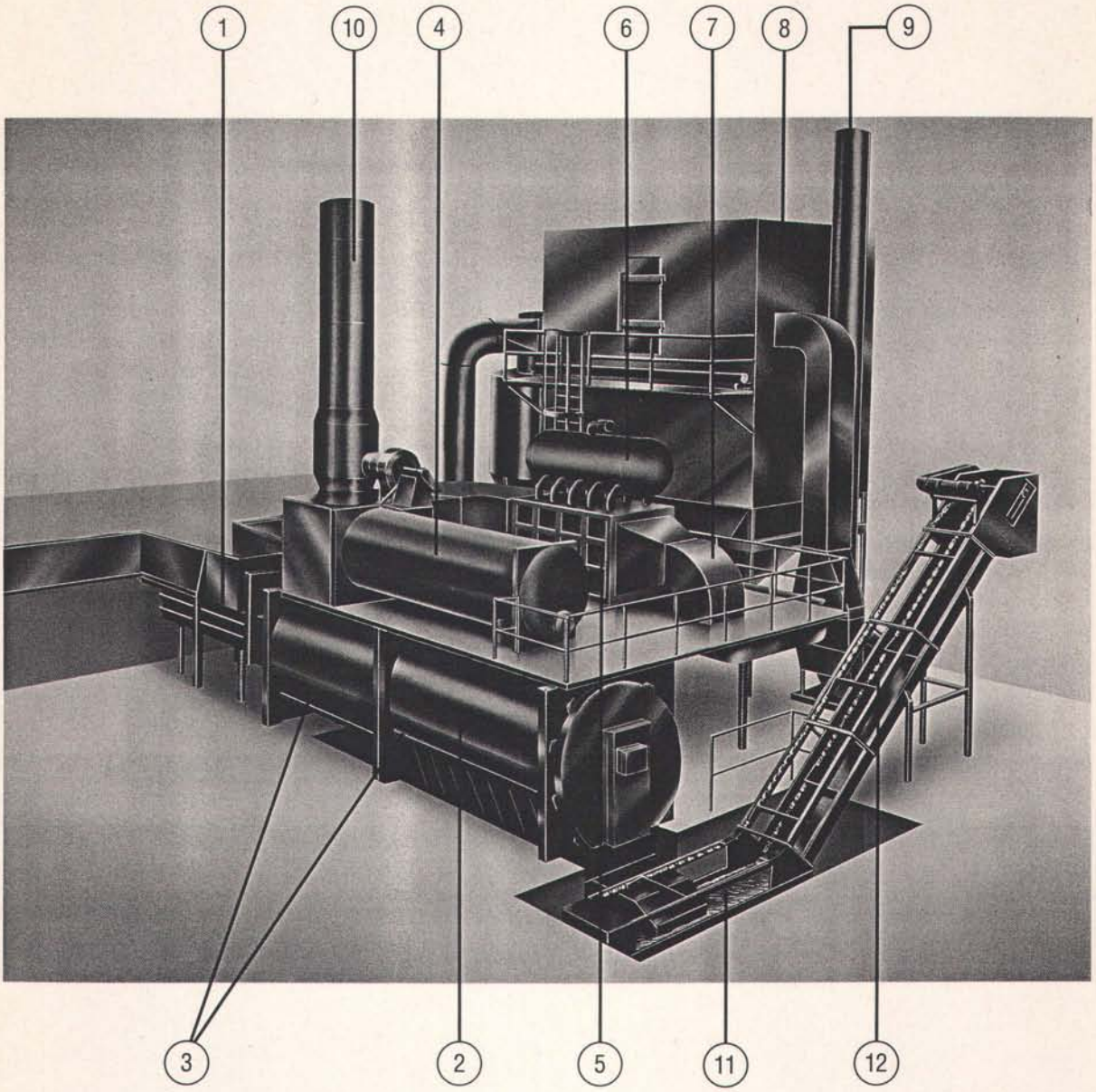

1. Automatic Feed System
2. Primary Chamber
3. Transfer Rams
4. Secondary Chamber
5. Steam Generator
6. Steam Separator
7. Energy Duct
8. Emissions Control System
9. Exhaust Stack
10. Emergency By-Pass
11. Wet Ash Sump
12. Ash Conveyor

CONSUMAT SYSTEMS INC.®

P.O. Box 9379 • Richmond, VA 23227 • (804) 746-4120 • Fax (804) 730-9056

The Consumat® Modular Systems

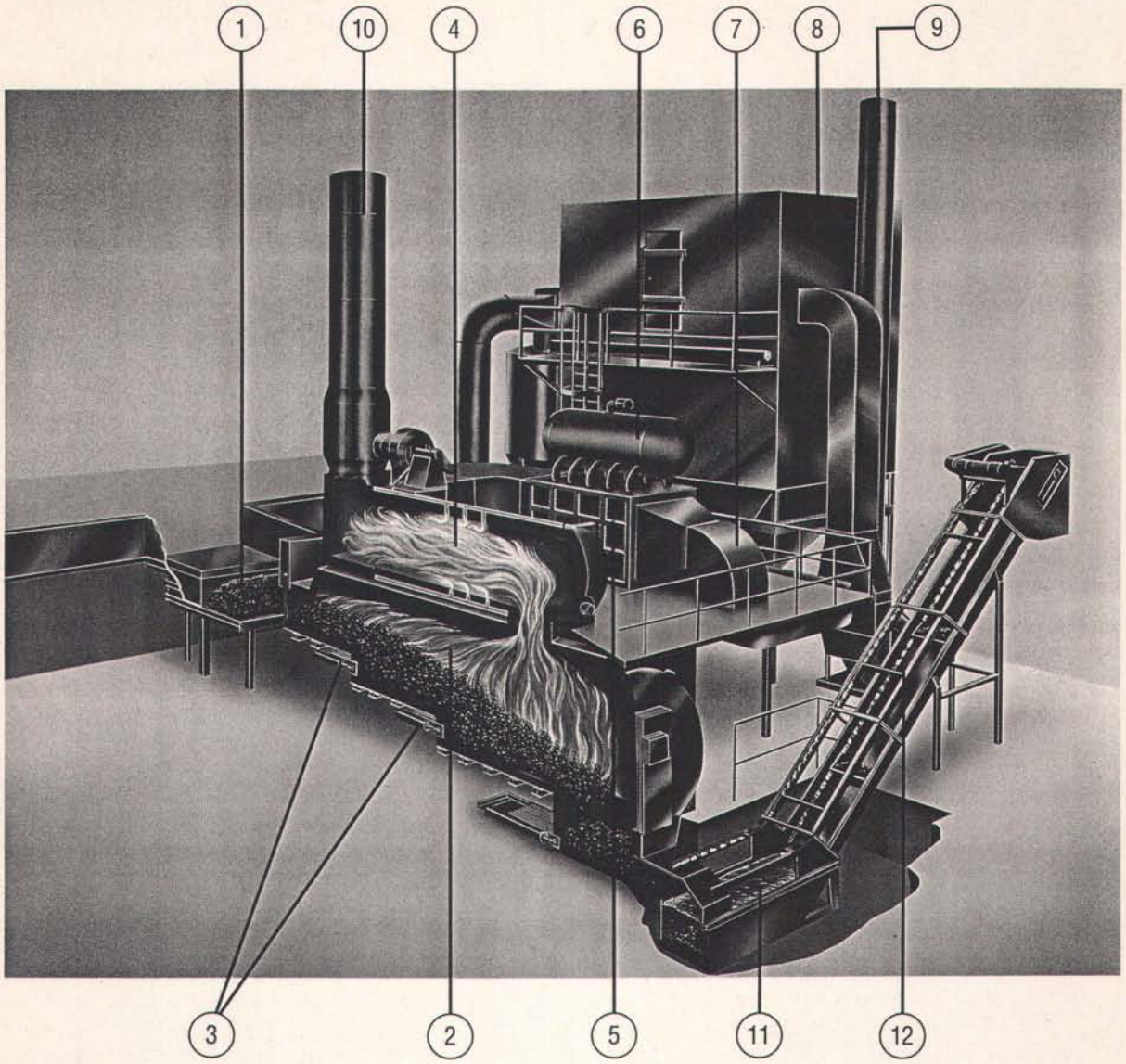

The above cutaway view of the CONSUMAT® energy-from-waste system shows how waste material and hot gas flows are controlled to provide steam from solid waste. Waste is placed into the automatic feed system (1). This system moves the waste into the primary chamber (2) where transfer rams (3) move the waste material slowly through the system. The high temperature environment in the primary chamber is provided with a controlled quantity of air introduced under the burning waste bed so that reducing gases from this process pass to the secondary chamber (4). Here the gases are mixed with air and controlled to maintain proper air/fuel ratio and temperature conditions for entrance into the steam generator (5). A steam separator (6) can be provided to ensure high quality steam. Cooled gases are then discharged through the energy duct (7) to an appropriate emissions control system (8) designed to meet specific regulatory requirements for acid gas scrubbing and particulate control. After passing through the emissions control system, cleaned gases are released into the atmosphere through the exhaust stack (9). In the unlikely event of an emergency condition, hot gases can be temporarily vented through an emergency by-pass (10). The residue from the combustion process is ejected from the machine into the wet ash sump (11) and carried by an ash conveying system (12) into a container or bunker area where ash is collected and disposed of in an appropriate manner.

CONSUMAT SYSTEMS INC.®

P.O. Box 9379 • Richmond, VA 23227 • (804) 746-4120 • Fax (804) 730-9056

1.2 SPECIFICATIONS
CONSUMAT® CS-760-2 INCINERATOR

MAX. CAPACITIES:	Charging Rates: 1,680 lb/hr continuous or 2,000 lb/hr, 8 hours per day Based on 7,500 Btu/lb waste
INTERNAL VOLUME:	Lower Chamber: 890 ft^3 Upper Chamber: 960 ft^3 minimum (total for both)
HEARTH AREA:	84 ft^2, 112 ft^2 including sump.
TRANSFER RAM:	Construction: 3/4" and 1/2" A-36 plate, with water jacketed face. Push Force: 29,400 lbs. Max. Stroke: 40" Ram Suspension: Adjustable rollers.
ASH REMOVER:	Model AR-4284 Construction: 3/4" A-36 plate, water jacketed. Sump Entrance Size: 42" x 84" Discharge Size: 21" x 84" Discharge Ram Force: 58,800 Lbs.
CHARGING DOOR:	32" x 72" clear opening.
CLEANOUT DOOR:	Lower Chamber: 30" x 66" clear opening, with 16" x 16" inspection door. Upper Chambers: 24" x 42" clear opening.
CASING:	Lower Chamber: 1/4" A-36 Steel. Upper Chambers (2): 3/16" A-36 Steel. Upper Chamber Air Jacket: 12 Ga A-36 Steel. Lower Chamber Air Jacket: 12 Ga A-36 Steel.
INSULATION:	Lower Chamber: 2" thick, 1900°F monoblock in upper half, 1" in lower half wall; 1/2" ceramic fiber board under hearth firebrick. Upper Chambers: 2" thick, 1900°F monoblock.
REFRACTORY:	Lower Chamber: 5" thick 2650°F high strength castable in upper half, 6" thick high-duty firebrick in lower half wall; 4 1/2" high duty firebrick on hearths. Upper Chamber: 6" thick 3000°F high strength castable.

1.2 SPECIFICATIONS
CONSUMAT® CS-760-2 INCINERATOR

BYPASS STACK:

Below Bypass Valve:
Casing: 12 Ga A-36; Lining 4 1/2" thick, 3000°F castable refractory and 1 1/2" 1900°F mineral wool block.
Above Bypass Valve:
12 Ga type 304L stainless steel.

I.D. FAN:

Twin City 330RTF, 125 H.P.

BURNER TYPE:

North American Dual Fuel series, forced air, with spark ignited pilot and ultraviolet flame sensor.

BURNER SIZES:

Lower Chamber: (2) @1,000,000 Btu/hr. each.
Upper Chamber #1: (1) @ 6,000,000 Btu/hr.
Upper Chamber #2: (1) @ 4,000,000 Btu/hr.

COMBUSTION AIR:

Upper Chamber Combustion Air
Blower : American 19AH
Motor: 20 h.p., TEFC
Upper/Lower Chamber Burners
Blower: North American 2316-21/1-T20D
Motor: 20 h.p., TEFC
Lower Chamber Underfire Air
Blower: Dayton 4C108
Motor: 1 h.p., TEFC
Ash Sump Underfire Air
Blower: North American 2310-19/1-T1D
Motor: 1 h.p., TEFC

LOADER:

ML-561
Construction: Reinforced A-36 plate; 1/2" ram face; 3/8" chute bottom, 1/4" sides.
Hopper Size: 32" deep, 72" wide, 54" long
Hopper Volume: 72 ft³ (2.67 yd³)
Hopper Opening: 68" x 40" clear opening
Ram Stroke: 8' - 0"; Extension: 38"
Ram Push Force: 12,400 lbs.
Ram Suspension: Roller-Bearing steel casters.

1.2 SPECIFICATIONS
CONSUMAT® CS-760-2 INCINERATOR

ASH CONVEYOR:

MODEL AC-48
48" wide, dual chain, pivoted flights.
Construction: Reinforced A-36 plate: 3/8" bottom and sides.
Drive: Hydraulic motor, roller chain reducer.
Drag Chain: Drop forged, No. X468
Chain Pull Force: 7,000 lbs.
Quench Tank Capacity: 1,500 gallons, approx.

HYDRAULIC SYSTEM:

Power units mounted on floor. Separate power units are provided for the loader/rams and the ash sump hydraulics/conveyor.

	Loader/Ram	Conveyor/Ash Sump
Pump:	12 gpm @ 1500psig	2.8 gpm @ 1500psig
Motor:	15 hp, 1,750 rpm	3 hp, 1750 rpm
Tank:	40 gallon	15 gallon

Cylinders: JIC type, 3000 psi.
Hydraulic Fluid: Synthetic, fire resistant.

COMPONENT COOLING:

Skid-mounted, closed loop, recirculating water system with "once through" service water injection backup system.
Pumps: (2) 1.5 hp, 3450 RPM, TEFC
Water/Air Heat Exchanger: 3hp, Young #66D3

ACCESS PLATFORM:

OSHA Standards
Lower Chamber Platform.
Upper Chamber Platform.
Quench Nozzle Access Platform.
Starter Panel Platform

FINISH:

Heat resistant silicon alkyd paint.

1.2 SPECIFICATIONS
CONSUMAT® CS-760-2 INCINERATOR

UTILITIES REQUIRED:

ELECTRICAL:

SERVICE	*AMPS*	*VOLTAGE*
Incinerator	130	460V, 3PH, 60HZ
Cooling Skid	15	460V, 3PH, 60HZ
Scrubber	500	460V, 3PH, 60HZ
Compressor	100	460V, 3PH, 60HZ
Lime Feed	25	460V, 3PH, 60HZ
Scrubber	50	230V, 1PH, 60HZ
Air/Water Skid	10	230V, 1PH, 60HZ
CEM Panel	40	230V, 1PH, 60HZ

NATURAL GAS:
12,500 CFH @ 18" W.C., 3" NPT

FUEL OIL:
86 GPH @ 10 PSI

WATER:

SERVICE	*CAPACITY*
Incinerator	10 gpm @ 40 psi, 3/4" NPT
Ash Quench	20 gpm @ 40 psi, 1" NPT
Air / Water Skid	10 gpm @ 40 psi, 3/4" NPT
Cooling Skid	10 gpm @ 40 psi, 3/4" NPT

COMBUSTION MAKE-UP AIR:
6,000 CFM (Approximate)

1.2 SPECIFICATIONS
CONSUMAT® CS-760-2 INCINERATOR

STANDARD CONTROL FEATURES:

Keylock Power On switch
Solid-state programmable controller, Gould Modicon.
Pushbutton start for blowers and burners.
Panel mounted burner status lights and reset buttons.
Lower burner interlocked to upper burner.
Lower burner timer with pushbutton restart.
Automatic incinerator shutdown by burndown timer.
Lower chamber temperature controller with water spray and delayed underfire air shutoff.
Upper chamber temperature controller with modulation of burner fuel, upper chamber air and underfire air, and high temperature lockout on loader controls.
Pushbutton loader hopper door actuation followed by automatic loader cycling.
Automatic transfer ram cycling.
Automatic ash remover control with selectable delay cycles.
Automatic ash conveyor control with variable run time.
Locally mounted auxiliary controls for ash remover and conveyor.
Manual overrides on all hydraulically driven systems.
IRI burner control system.

INCLUDED OPTIONAL FEATURES:

Two second upper chamber
Loader lockout based on minimum upper chamber temperature of 1800°F.
Loader lockout based on minimum lower chamber temperature of 1200°F.
Locally mounted transmitters for remote system monitoring.

AIR POLLUTION CONTROL SYSTEM:

Particulate/acid gas removal system comprised of a flue gas quench chamber, Interel IDAP-II Dry Scrubber / Fabric Filter Baghouse System and associated ancillary systems.

NOTE: See **O&M Manual Volume III** for information relative to the Interel scrubber system.

5.0 GENERAL

Proper installation and operation of Consumat Systems' equipment can only be achieved if it is properly maintained during the construction phase. It is important to maintain proper control of all phases of the flow of Consumat Systems' equipment from the factory to final installation and operation of the system; therefore, this section has been broken down into three sections.

- The control of equipment to the jobsite: **Site Preparation, Receiving, Inspection, Storage, and Installation.**
- Pre-start procedures: **Pre-Start Checks and Safety Precautions for the Loader, Incinerator, Ash Remover/Conveyor, Cooling System, Hydraulic System, Energy System and Emission Control System.**
- Operation of the Incineration System: **Start-up, Normal Operation, Shutdown, and Emergency Shutdown.**

Included are descriptions of different areas where it is felt that, if proper controls are maintained, startup costs can be reduced, since properly installed and maintained equipment needs less corrective maintenance. Pre-start procedures include final adjustments and tests of equipment before it is actually put into service. These procedures and safety precautions must be followed in order to insure a successful start-up and avoid personnel injuries and equipment damage.

Continued proper operation and maintenance of the facility is mandatory if maximum availability, operating economy and longevity are to be realized.

5.1 INSTALLATION

5.1.1 SITE PREPARATION

1. Make sure that all Consumat Systems, Inc. drawings needed for site preparation, receiving, inspection, and installation are available on site and have been reviewed for familiarization by **personnel performing the work.**

2. Make sure enough time has been allowed for the concrete pads to properly cure.

3. Utilities:
   a. Check gas lines for proper installation and sizing.
   b. All regulators should be sized and installed according to the incinerators' maximum fuel demand.
   c. Check electrical supply for proper voltage.
   d. Inspect circuit breakers for correct sizing.
   e. Make sure that all electrical grounds are installed and connected.

4. Access to the point of installation should be thoroughly analyzed for load bearing capabilities.

5. All unloading equipment (forklift, crane, etc.) should be sized and scheduled according to Consumat Systems, Inc. weight specifications and shipping control department.

NOTE

It is the responsibility of the consignee to inspect the shipment against the Bill Of Lading. Note any discrepancy while the driver is present. Any damage noted upon delivery should also be indicated on the Bill of Lading and presented to the driver. Hidden damage should be reported to the carrier immediately upon discovery.

THE CONSIGNEE MUST MAKE ALL CLAIMS TO THE CARRIER FOR SHORTAGE OR DAMAGE.

5.1 INSTALLATION

5.1.1 UNLOADING

Consumat® **Incinerator Systems** are shipped disassembled in the following sections, as applicable to that project:

- Lower Chamber
- Upper Chamber #1
- Upper Chamber #2
- Air Duct System
- Bypass Valve
- Quench Chamber
- Stack Sections
- Support Structure(s) & Platforms(s)
- Loader
- Control Boxes
- Ash Remover
- Ash Conveyor
- Hydraulic Power Unit(s)
- Pumps, boilers, air compressors, purchased scrubber systems and other ancillary equipment may be shipped separately by suppliers to the job site.
- Cooling Skid
- Water to Air Heat Exchanger
- I.D. Fan

NOTE: Burners and some piping on the lower chamber of larger units may be removed and packed inside the lower chamber for shipping. Assembly hardware and refractory packing materials are also shipped inside the lower chamber.

5.1 INSTALLATION

5.1.2 PREPARATION AND RIGGING

- Carefully inspect all equipment for any damage or loss that may have occurred during shipping. If any damage or loss is noted, notify the driver immediately. Note damage or loss on bill of lading and have the driver sign the bill. Notify the trucking company immediately so that they may institute an investigation. Unload the equipment only after the driver has noted any damage or loss and signed the bill of lading accordingly.
- Inspect all lifting lugs for damage.
- Be sure that the crane operator or rigger is equipped with all necessary shackles, slings and spreading bars.
- Carefully mark the pad with the exact location of incinerator and auxiliary components such as loaders.
- When unloading and erecting, use the lifting lugs provided.
- If equipment provided is to go into storage, determine if storage area is accessible.
- Have suitable and firm footing prepared to bear the weight of stored equipment.
- Seal up all openings through which moisture can enter. Refractory that absorbs too much water can freeze and be severely damaged.
- Lay all equipment on suitable timbers.
- Cover all electrical motors and fans etc. with suitable water proof covering that can withstand severe weather.
- Cover all controls and electrical panels with same. Keep clean and free of grit, dirt, moisture, grease, or oil.
- If possible, cover entire incinerator system with suitable water proof covering. If not, Item 13 is mandatory, (however, it should be done regardless of covering).

5.1 INSTALLATION

5.1.2 PREPARATION AND RIGGING

- Prepare and maintain an inspection program to visually inspect equipment until installed.

1. Look for development of rust bloom through paint and observe general paint condition.
2. Waterproof covering is secured.
3. All openings are sealed and moisture has not entered.
4. All electrical equipment is dry and free of grit, dirt, grease, or oil.
5. Inspection program should be scheduled every two weeks and be performed by suitable personnel trained in mechanical and electrical equipment. Make sure that all necessary Consumat Systems' drawings are available and have been reviewed for familiarization.
6. Refer to Manufacturers' Literature for any additional information concerning storage and long term maintenance for controls, motors, and various electrical components.
7. Proper storage procedure as outlined for Consumat Systems equipment should be followed, since failure to do so could affect the **Consumat Systems, Inc. Warranty and Warranties with its suppliers.**

5.1.3 ASSEMBLY OF INCINERATION EQUIPMENT

- Locate and unpack assembly bolts, and have on hand any necessary shims.
- Install loader (and loading bridge, if applicable).
- Place ash conveyor in the pit with orientation per the drawings.
- Place ash remover on level surface and use crane to position lower chamber over ash remover so they may be bolted together. Then move assembly into position and level. If necessary, the ash remover may be placed into position first and jacked or rigged onto the lower chamber after installation. The mating flanges should be gasketed with Lo-Con felt provided by Consumat.
- Position and level lower chamber.
- Install skid beams or other structural supports furnished for mounting of the upper chamber(s).
- Position upper chambers and secure to mounting studs.

5.1.3 ASSEMBLY OF INCINERATION EQUIPMENT

- Assemble, position and bolt gas duct sections.
- Assemble stack sections and lift into place.
- Position, align, level, and bolt loader to incinerator tap-in. Level by adjusting the loader feet, or by shimming. (*This is an alternate sequence of loader installation if required by site specific conditions.)*
- Make necessary wiring connections between components.
  Refer to hook-up and power requirement drawings provided.
- Pack joints between upper and lower chambers with plastic poundable refractory provided by Consumat.
- Pack inside ledge of ash ejector to lower chamber mating flange with plastic poundable refractory furnished by Consumat.
- Make required utility connections.
- Run I.R.I. gas vent line away from incinerator per local codes.
- Position, align, level, and bolt ash conveyor inclined trough sections to incinerator ash sump. Level by shimming conveyor feet.
- Connect lower/upper chamber air shroud ductwork. (On units with multiple lower chamber sections, the shroud duct sections should not be rigidly bolted until all sections are fitted into place. This will allow minor dimensional tolerances to be adjusted throughout the length of duct as opposed to a misfit at one joint).

5.2 PRE-START PROCEDURES

CAUTION

All incinerator sub-systems must be completely checked out before the incinerator is placed into operation: solids handling, cooling system, combustion air, auxiliary burners, temperature and combustion control, refractory and mechanical assembly. Before starting the incinerator pre-start checkout procedure, verify that off-line checkouts have been completed on all connecting systems such as: electrical power, instrumentation, fuel supply systems, hydraulic power system, water supply systems, cooling skid, boiler, scrubber system(s) and ancillary support equipment such as the air compressor.

5.2 PRE-START PROCEDURES

5.2.1 HYDRAULIC LOADER

LOADER PRE-START CHECKS

Before placing the loader into operation various mechanical adjustments should be verified to help achieve reliable operation and long service life. The hydraulic power system must be fully operational to accomplish these checks (See Sections 3.3 and 5.2.6).

CAUTION

Read Section 5.2.1-LOADER SAFETY PRECAUTIONS before operating unit.

Limit Switch Adjustments

- Under the loader chute, inspect the limit switch, sliding cam, sheave and cable actions to see that they run freely and that the limit switch rollers engage the cam positively.
- With the hopper door open, run the fire door fully open and check to see that the door has stopped in a position where the bottom surface of the door is approximately 1/2" above the inside top surface of the loader chute. Adjust the door-up limit switch if necessary.
- Go to the side of the tap-in and watch the door-down limit switch operate as the door comes down. The switch should be adjusted to actuate approximately 2 to 3" before the door seats.
- Run the fire door to the up position then cut off system power. The fire door should fall slowly to the closed position.

Loader Hopper Door

- Operate the hopper door and observe the action. When fully open the door should be seated against the back stop. Adjust the limit switch if necessary. The door should open and close freely without dragging on the side plates. When closed the door should be seated against the two corner stops.

5.2 PRE-START PROCEDURES

5.2.1 HYDRAULIC LOADER

LOADER PRE-START CHECKS

Ram Wheel Adjustments

- Using manual loader controls, open the loader door and move the ram to a position where the ram face has just closed off the hopper opening.
- Turn off the loader and **lock out** the power unit disconnect switches.

CAUTION

NEVER ENTER THE LOADER HOPPER OR CARRIAGE ASSEMBLY AREA UNTIL ALL POWER TO CONTROLS AND HYDRAULIC POWER UNIT ARE LOCKED-OUT AND TAGGED-OUT. FAILURE TO FOLLOW PROPER SAFETY PROCEDURES COULD RESULT IN SEVERE PERSONAL INJURY OR DEATH.

- Enter the rear of the loader chute and examine all accessible ram and carriage wheels. The tandem-mounted wheels under the ram frame and the wheels supporting the cylinder carriage should be in full contact with the angle tracks without signs of lateral strain. The guide wheels at the sides of the ram frame should be in loose contact with the chute, with clearance of no more than 1/8". The wheels at the top rear of the ram frame should be in light contact with the top bars with essentially no clearance. Adjust the wheel brackets if necessary.
- Go to the top of the ram and examine the wheels near the ram face. They should have about 1/16" clearance to the bars immediately above. Adjust if necessary.
- Go inside the incinerator and have an assistant run the ram all the way into the incinerator tap-in and stop. Look around the ram face perimeter to see that there is relatively uniform clearance at the sides and bottom. Run the ram back into the loader chute to see that the ram front support wheels re-engage the support track without excessive shock to the ram. Re-adjust the rear guide wheels if necessary.
- Run the ram all the way back into the loader chute and again examine the support and guide wheels to be sure there is no lateral strain or other binding. Check the rear cylinder rod attachment to see that the rod eye pin is relatively free and there is no side load on the cylinder rod.

5.2 PRE-START PROCEDURES

5.2.1 HYDRAULIC LOADER

LOADER SAFETY PRECAUTIONS

In addition to the general safety precautions described in the first part of this manual, **the following specific precautions must be observed when operating the loader:**

1. Be sure to read and understand Chapters 3 through 7 of this manual before operating the loader. Only trained operators must be allowed to operate the loader.

2. Before turning on power to the hydraulic power unit or operating the loader, be sure that the loader is free of all obstructions and personnel. For practical reasons areas around the loader's moving parts cannot be protected with additional personnel guards.

3. **Never** enter any part of the loader without first seeing that the electrical power disconnect to the hydraulic power unit is **locked off. 5.2 PRE-START PROCEDURES**

> **CAUTION**
>
> **Never enter the loader chute area between the ram and the firedoor when the incinerator is in operation or at an elevated temperature.**

4. Before opening the hopper door be sure that the area is clear of all obstructions and debris and that all personnel are well clear. The door-operating pushbuttons are momentary-contact type and the door will go full stroke after the buttons are actuated.

> **CAUTION**
>
> **Stay clear of the loader door at all times! The actuation force at the door lip is approximately 3500 lbs. and could inflict severe personal injury. Keep hands and feet clear!**

5. Do not overfill the loader chute or attempt to force the chute door closed. The loader ram could become jammed or the loader door damaged.

5.2 PRE-START PROCEDURES

5.2.1 HYDRAULIC LOADER

LOADER SAFETY PRECAUTIONS

6. Respond promptly to the malfunction alarm. Neglect of this condition could eventually result in a loader fire or heat damage to the ram and chute. Use the manual controls to carefully clear the malfunction and restore normal operation.

7. Keep the area in the rear of the loader chute cleared of debris. Waste accumulation in this area creates a fire hazard and will eventually cause mechanical problems.

8. Do not operate the loader if the fire door has become damaged in any way that prevents it from properly closing off the entrance to the incinerator.

CAUTION

If it ever necessary to operate the loader by manually shifting the hydraulic solenoid valves, use extreme caution.

The interlocks between the ram and firedoor will not function in this bypass mode. A second operator must be used to observe manual movement of hydraulic components not visible to the operator activating the solenoid.

9. Maintain a clean area around the loader. Hydraulic fluid spills are extremely slippery and can result in serious personal injury.

10. Be sure that the causes of all loader malfunctions are properly identified and reported, and that effective steps are taken to prevent their recurrence. See that all operating problems and safety hazards are promptly reported to the plant manager.

5.2 PRE-START PROCEDURES

5.2.2 INCINERATOR

CAUTION

Before starting the incinerator checkout, read and observe all Safety Precautions described in this manual.

CAUTION

Completion of the incinerator pre-start checkout procedure does not mean that the incineration system can be started. ALL plant systems must be operational before actual startup of the incinerator.

Solids Handling
Check the transfer ram and the ash remover ram for proper alignment and movement:

1. Inspect the two side rollers mounted on the lower chamber at the side of the transfer ram. The rollers should be adjusted so that the ram is in a laterally centered position. The rollers should not be in tight contact with the sides of the ram. The ram should have a total side clearance of about 1/16". Adjust if necessary and see that all adjustment plate bolts are firmly tightened.

2. Check the two rollers mounted between the hearth plate and the top of the ram. There should be about 1/16" clearance between the rollers and the top of the ram when the ram is in the normally retracted position.

3. Check the four rollers mounted in the ram support frame. These rollers should be adjusted so that the front of the ram is very close to the hearth surface but not supported by the hearth. The roller brackets can be adjusted by removing the four bolts and replacing the shims as required.

4. See that all guide rollers have been lubricated with a grease gun.

5. Inspect the ram side seal plates and adjust so that there is about 1/16" clearance if the ram is close to the guide rollers on the same side. See that the ram top seal bar is being held firmly against the top of the ram by the tensioning springs on each side.

5.2 PRE-START PROCEDURES

5.2.2 INCINERATOR

Solids Handling

6. Inspect all hydraulic cylinder mountings to see that the pins and retainers are secure.

7. Inspect all hydraulic and cooling system lines to see that there are no potential interferences with ram movement.

8. Have an assistant operate the rams individually and observe from below the incinerator, checking for smooth movement and the absence of any binding or interferences.

> **CAUTION**
>
> **Always stay clear of moving components.**

9. Again operate each ram and observe from inside the incinerator. The ram should move freely over the air pipes and not drag on the hearth bricks. If the ram is dragging or if the ram-to-hearth clearance increases appreciably as the ram extends, the ram support rollers and/or the rear top rollers will need to be adjusted. If the ram binds on the air pipes, close inspection will be necessary to determine the best means of realignment.

10. After the proper operation of each individual ram has been established, operate the complete ram system on automatic cycle to confirm operation of the limit switch and control functions. If necessary, adjust limit switch arms for positive switch actuation.

11. Operate the ram system in automatic cycle while observing the hydraulic pump pressure for each action. All transfer ram extension stroke pressures should be essentially the same, approximately 300 psi. All transfer ram retraction stroke pressures should be essentially the same and somewhat higher than the extension stroke pressures. Variations in pressure indicate mechanical binding and must be corrected.

    The ash remover ram will operate at a relatively low pressure on the extension stroke with a greater pressure increase on the retraction stroke. There is little possibility of mechanical binding with the ash remover at this time.

5,2 PRE-START PROCEDURES

5.2.2 INCINERATOR

Combustion Air

The combustion air system should be checked for blower performance and proper operation of the air control system:

1. Before starting the blower, inspect the installation to see that all fasteners, belts, guards and duct joints are secure. Remove the inspection panel at the air control damper and check the damper assembly integrity.

2. Turn on the incinerator temperature control system. With the upper chamber temperature below the controller setpoint, the air control damper should move to the fully closed position. Check the position of the damper blades to see that they are fully closed and that there is a slight clearance around the blades.

3. While observing the air damper and linkage, have an assistant move the temperature controller setpoint to a temperature below ambient. This should cause the air damper to go to the full open position. The damper mechanism should move smoothly and without binding until the blades are in an essentially horizontal position.

4. If the air damper needs no further attention, replace the damper inspection panel.

5. Check out the blower motor with the assistance of a qualified electrician. Note the rated amperage of the blower motor. Place an ammeter on one of the blower motor wires, and with the blower air damper remaining fully open, start the blower motor. Verify correct rotation of the motor.

6. Make a note of the motor amperage. If the amperage is within the rated value remove the ammeter, secure the junction box, and allow the blower to continue to run.

7. If the motor amperage is above the rated value, turn off the motor. Consult Consumat engineering before proceeding.

8. With the blower operating with a fully open air damper, make a note of the upper chamber air jacket pressure and the pressures at the blower inlet and exit. The blower pressure rise should be approximately 8 to 10" w.c. If the pressure rise is outside of this range, adjustments to the system may be necessary.

9. With the blower operating, reset the temperature controller to a level above ambient temperature. The air damper should close. After the damper is fully closed, make a note of the motor amperage and the pressures in the air jacket and at the blower inlet and discharge.

10. Inspect the lower chamber blower and air control valve installation integrity. Adjust all manual air valves to a fully open position.

5.2 PRE-START PROCEDURES

5.2.2 INCINERATOR

Combustion Air

11. With the upper chamber temperature control system on and the controller setpoint above ambient, check the lower chamber air control valve to see that it is fully open.

12. Note blower motor rated amperage, place an ammeter on a motor wire and start the motor. Make a note of the running amperage and the inlet and outlet pressures at the blower. The pressure rise should be about 10 to 12" w.c.

13. With the blower running, have an assistant reset the upper chamber temperature controller to a temperature below ambient. The air valve should slowly move to a fully closed position. Make a note of the air pressures at the blower inlet and outlet and at the downstream side of the air control valve. At this condition the valve downstream pressure should not be greater than 1" w.c. A higher pressure indicates that the valve needs adjustment for full closure.

5.2 PRE-START PROCEDURES

5.2.2 INCINERATOR

North American Dual Fuel Burners

At the factory, burners are started up and adjusted using propane gas fuel. On site adjustments are necessary for natural gas, and to correct for the difference in gas pressure, installation of the stack, and possible changes caused by shipping and installation.

This unit is equipped with special dual fuel burners manufactured by North American Manufacturing. Refer to the Gas Fuel Schematic drawing for a diagram of the gas/oil piping. Ensure that adequate gas/oil pressure and capacity is available. Requirements are as follows:

Natural Gas: 12,500 CFH @ 18" W.C.
Fuel Oil: 86 GPH @ 10 PSI

Refer to the manufacturer's literature for setup, adjustment, operating and maintenance instructions provided by North American.

Burner Spark Ignitors

WARNING
HIGH VOLTAGE SHOCK HAZARD

Shut off power to incinerator before removing spark igniter cap. Failure to shut off power could result in electrical shock and possible severe personal injury.

Fuel Modulation Valves

1. See that all manual gas valves are shut off at the burners.

2. Turn on the upper chamber temperature control system and have an assistant set the controller above ambient temperature and then below ambient temperature. Observe the upper burner fuel modulation valve to see that it first goes fully open and then fully closed in response to the controller settings. Make adjustments if necessary, then turn off the controls.

5.2 PRE-START PROCEDURES

5.2.2 INCINERATOR

Gas Burner Adjustment

1.

CAUTION

To avoid possible personal injury and damage to equipment, follow the appropriate steps before attempting to adjust burner.

- Make sure that fuel valves do not leak and there is no fuel in the incinerator.
- Close and latch charging door and inspection door.
- On each burner:
  Close manual control valve.
  Close air shutter.

2. Locate burner manual air adjustment valves. There is a valve for each lower chamber burner located around each burner. The manual air adjustment valve for the upper chamber burner is located by that burner.

3. The damper position is indicated by a pointer on the valve wheel. Start with burner air at the midpoint position.

4. Turn power switch to ON. Push START button. Blower will come on. After pre-purge timer expires (3 min.) burner pilot flames will ignite.

5. Adjust pilot to full blue flame. (Refer to North American literature).
At initial start-up, pilot may fail the first few attempts due to air in lines.

6. Once pilot light is established, check that all doors are closed, then slowly open manual control valve. Main burner flame will ignite.

7. To view burner flame, carefully open inspection door. (Stand **behind** door, crack open slightly, then open the rest of the way.) Adjust burner air valve to give full yellow flame. Flame should turn upward at tips.

8. Gas pressure is adjusted at the factory to give full firing on propane gas. Follow North American instructions for gas and air pressure required for the desired firing rate on natural gas.

9. Repeat steps 5 through 8 for all burners.

5.2 PRE-START PROCEDURES

5.2.2 INCINERATOR

Gas Burner Adjustment

> **CAUTION**
>
> **Burners should not be fired for more than a few minutes unless the cooling system is operating. Failure to observe this precaution could result in serious damage to water cooled components.**

Underfire Air Adjustments

The underfire air supply valves for the water cooled air pipes are located on the underfire air manifold. The valve is closed at "0" and full open at "10". Begin with these valves set at the "3" position. For consistently wet waste, a higher level of underfire air may be needed. For waste with a high plastic content, less underfire air may be required. The initial air adjustment should be observed during the start-up phase to determine any adjustment required.

The underfire air supply valve for the ash sump injection system is located on the header for that system. The ash sump air system has a separate blower. Initially, the air setting should be in the range of 10" w.c. to 15" w.c. to ensure sufficient air pressure to keep the orifice clear of ash residue. Final air setting must be determined after observing operation for several days.

After preliminary adjustments have been made and refractory has been cured, operate the incinerator with normal amounts of waste for two to four hours. If a greater rate of waste reduction is needed, re-adjust valves to increase underfire air. It may also be necessary to re-adjust the burner air. Repeat both burner and underfire air adjustments until unit operation stabilizes.

NOTE: *Too much underfire air can cause the incinerator to smoke and produce fly ash.*

5.2 PRE-START PROCEDURES

5.2.2 INCINERATOR

Temperature and Combustion Control

Checkout of this system has been partially completed in the preceding steps. To complete the checkout:

1. Refer to Consumat drawing D-50-4443 Sheet 10 for proper configuration and alarm settings on the temperature controllers.

2. Check the thermocouples inside the upper chamber. The protection tube should extend 6 to 8" past the inside wall surface.

3. Turn on the incinerator controls and the incinerator water supply. Observe the two water spray nozzles inside the lower chamber while an assistant sets the water spray temperature controller to a temperature below ambient. The sprays should operate at this time. See that the nozzle holders have the correct penetration such that the nozzles extend into the incinerator just enough for the spray to clear the surrounding refractory. Reset the temperature controller setpoint above ambient temperature to see that the sprays turn off.

4. Check the position of the lower chamber thermocouple. The tube should extend 5 to 6" past the inside wall.

5. Verify that all controller setpoints and timer settings have been selected according to the normal values listed in Chapter OP-4.

Refractory and Mechanical Assembly

The entire incinerator assembly should be checked from the inside to assure that all joints are reasonably tight. It is very important that the lower chamber have a minimum of air leaks so that the combustion control system can function as designed.

1. Check the joint between the loader and tap-in. All surfaces should be flush or, at least, not present any obstruction to in-coming waste materials.

2. Inspect the refractory packing at the joints between the lower chamber and upper chamber(s) breech sections to see that all joints are completely filled and packings are secure.

3. Inspect the packing at the horizontal ash remover sump joint to see that it is secure and molded to cover projections.

4. Look carefully at the joint at the lower chamber rear head to detect any light from the outside. Add refractory caulking if necessary.

5. Check the joint between the ash remover and the ash remover shroud to see that it is aligned so that there are no projecting corners to catch on ash materials.

5.2 PRE-START PROCEDURES

5.2.2 INCINERATOR

Refractory and mechanical assembly

6. Inspect the lower-to-upper chamber breaching joint. The refractory gap should be completely filled and the external drawband in place.

7. See that all refractory packings are secure in the upper chamber joints.

8. Inspect the external vertical joint between the lower chamber and the ash remover sump. Fill any gaps with silicone rubber caulking.

9. Check all inspection doors to see that the gaskets are seating fully and that the latches are adjusted for a firm closing force.

INCINERATOR SAFETY PRECAUTIONS

In addition to the general safety precautions listed at the beginning of this manual, the following specific precautions must always be observed when operating the incinerator:

1. Make sure that all equipment guards and other safety devices are in place and in proper operating condition before starting the equipment.

2. Before incinerator start-ups, see that the ash conveyor tank is empty of ash and filled with water to the normal level, and ash remover door is securely latched.

3. Account for all plant personnel and advise them before all incinerator start-ups.

4. Immediately prior to every start-up, check the inside of the incinerator and secure all inspection doors.

5. Be observant during the start-up and operating cycles so that any malfunctions can be detected and corrected promptly.

6. Do not carelessly open any inspection doors. When equipment is operating, inspection doors should be opened only when absolutely necessary and only when appropriate full face and body protection is worn. If an incinerator door must be opened, open it very slightly and wait for a short time. Do not open the door any further if there are any smoke puffs around the door. If there is no smoke around the door it may be opened briefly. Always stand behind the door when opening. Never open the door when anyone is in front of the opening. Close and latch the door as soon as possible.

5,2 PRE-START PROCEDURES

5.2.2 INCINERATOR

INCINERATOR SAFETY PRECAUTIONS

CAUTION

In normal operation, the incineration lower chamber is filled with very hot, fuel-rich combustible gases. When air is allowed to enter the chamber, as when the inspection door is opened, the gases may suddenly ignite and eject a flame through the open door. There may also be some waste products in the chamber subject to volatile explosions, (pressurized containers, cans and aerosols).

7. Do not attempt to destroy explosives or highly volatile or hazardous wastes in the incinerator.

8. Keep all areas around the incinerator, loader, access platforms and conveyor clean at all times to reduce fire hazards and for ease of operator movement.

9. Report all unsafe conditions or procedures to management.

REFRACTORY CURING

The unit is shipped with the refractory in the uncured condition. That is, the refractory still contains moisture which must be baked out in a controlled manner so that the refractory can develop the full physical characteristics specified in its formulation.

CAUTION

All plant systems must be operational prior to refractory curing and loading of wastes.

Cooling system must be in operation or serious equipment damage will result.

5.2 PRE-START PROCEDURES

5.2.2 INCINERATOR

REFRACTORY CURING

The following steps are recommended for refractory curing:

a. Shut off lower chamber and upper chamber air except to lower chamber burners.

b. Fire lower chamber burner(s) to raise the lower chamber temperature to approximately 400°F. It might be necessary to operate the burner(s) for one to two days depending on the size of the unit and capacity of the burners. The temperature should be held at approximately 400°F for 24 hours.

c. The temperature in the lower chamber should be then raised to 1000°F at a rate not to exceed 50°F per hour. It might be necessary to charge a small quantity of waste into the unit to achieve this temperature. If charging is necessary, the upper chamber and lower chamber combustion air and burner operation must be controlled so that the temperature rise does not exceed 50°F per hour.

d. Once the approximately 1000°F temperature has been reached, this temperature should be maintained for twelve hours. The temperature should then be increased, by additional charging, at a rate not to exceed 100°F per hour in either chamber until a temperature of approximately of 1600°F is attained. This temperature should be maintained for eight hours.

e. Continue raising the temperature until the upper chamber(s) reach 1800°F. Hold this temperature for eight hours.

f. The unit should then be allowed to cool down slowly. All doors should be kept closed during the process.

g. During the curing process, a quantity of water will be driven from the refractory. It is common for this water to condense and run down the outer surfaces. This water must be promptly removed in order to prevent deterioration of the painted surfaces.

NOTE: **While curing the lower/upper chambers, the gases will exit through the Quench Chamber and scrubber. Set the Quench Temperature Controller (TIC-601) at 1000°F, to provide maximum curing temperature for the Quench Chamber refractory without excessive temperature at the inlet of the scrubber air to air heat exchanger. This will provide automatic temperature control of the quench chamber exit temperature.**

NOTE: Small cracks and separations in the refractory will form during the curing process. The cracks and separations (caused by expansion and contraction) are normal and not an indication of refractory failure.

5.2 PRE-START PROCEDURES

5.2.2 INCINERATOR

ASH CONVEYOR PRE-START CHECKS

Before the initial tank filling, perform the following checks:

1. Inspect the inside of the quench tank. Remove all debris, including welding rods and metal scraps. Look at every chain flight to be sure that the flight is in a trailing position relative to normal chain movement. Flights should be on approximately 5-foot centers.

2. Be sure that the shipping braces between the conveyor tank and the ash remover shroud have been removed.

3. Inspect all tank and trough joints. Grind off all projecting edges where joints may have been mismatched during installation. Ensure that all joints are sealed with silicone rubber caulking.

4. Check the conveyor chain tension. The chain should be tensioned so that the return chain is just touching the curved hold-down guide where the chain transitions from inclined to horizontal movement.

CAUTION:

Before adjusting the conveyor chain, inspect the chain tension adjusters to be sure that they are in the same relative position so that the head shaft is not cocked at an angle. Then the chain may be adjusted by alternately turning the adjusting screws. Never advance one side more than 5 screw turns ahead of the other side! The bearings will be damaged if they are angled more than 1 1/2 degrees.

5. Inspect the roller chain driving the head shaft. Adjust the chain to a mid-point deflection of 1/2 to 1". See that the sprockets are aligned and all sliding-plate bolts are firmly tightened. Replace all drive guards.

6. Lubricate all conveyor bearings and roller chains and fill gear drive reservoir as necessary.

7. Confirm that the hydraulic power unit is operational.

5.2 PRE-START PROCEDURES

5.2.2 INCINERATOR

ASH CONVEYOR PRE-START CHECKS

CAUTION:

Equipment is to be operated only by qualified and trained personnel, who have familiarized themselves with the equipment and all safety precautions. Never operate any equipment without first checking all areas with moving parts to see that they are clear of personnel and obstructions and that personnel in the immediate area are advised of the operation.

8. Turn on the controls to the power unit and conveyor and manually start the conveyor while observing the chain. If there is evidence of binding or jamming, turn off the conveyor, determine the cause and make corrections.

CAUTION

Follow the appropriate Lock-out / Tag-out procedures before performing maintenance on or entering the conveyor.

9. With the conveyor running, adjust the hydraulic pump volume control to produce a conveyor chain speed of about 10 feet per minute. (Refer to Section 5.3 and pump manufacturer's literature.)

10. If no further adjustments are needed, close the tank drain valves and fill the tank. Observe the tank and trough joints while the water level rises. If leaks are detected, empty the tank and apply caulking. Otherwise, fill the tank to the controlled overflow level and then shut off the fill flow.

11. Open the shroud access door and secure with the safety latch on the side of the tank.

CAUTION

Never project any part of your body into the door opening until the safety latch is in place with the door lowered slightly to jam it. A broken cable or faulty winch could cause the door to fall suddenly. Failure to follow this procedure could result in severe personal injury or death.

5.2 PRE-START PROCEDURES

5.2.2 INCINERATOR

ASH CONVEYOR PRE-START CHECKS

12. See that the water supply serving the incinerator is operational and open the manual valves to the incinerator.

13. Adjust the flow control valve in the continuous quench supply line to about 1 gpm as indicated on the local gauge and confirm the resulting flow inside the ash remover discharge tube. If satisfactory, shut off the local manual valve and leave the flow control valve as set.

14. Remove the caps at the ash remover water injectors and run a 1/8" rod through the jets to be sure that all are open. Replace caps.

15. Observe the action of the shroud water sprays while an assistant cycles the ash remover ram. A heavy mist should fill the shroud while the ram is coming forward and stop when the ram starts to retract. Remove and clean the nozzles and/or filters if necessary. Close and secure the shroud access door.

The conveyor is now ready for startup. Be sure to read the following section on safety precautions first!

ASH CONVEYOR SAFETY PRECAUTIONS

In addition to the general safety precautions presented at the beginning of this manual, the following apply especially to the ash remover:

1. Never enter the tank, head or trough or project any part of your body into the zones having moving parts until both disconnect switches on the hydraulic power unit are locked off and tagged. The conveyor chain moves very slowly and therefore may not be recognized as the serious threat that it is. In fact, if any object gets in its way, the drive system will immediately generate a force as great as 14,000 lbs to crush the obstruction! **Also remember that the conveyor will normally start automatically and without warning when the ash remover starts.**

2. When the incinerator is in operation or when hot residue is in the incinerator, <u>never</u> open the ash remover shroud access door without first locking off the power unit disconnect. At such times, be sure to wear appropriate face, hand and body protection against possible burns from hot ash and steam. The open shroud door could create a loss of negative pressure in the lower chamber, which could result in a "blowback" at the open door.

3. Never allow the ash remover to discharge residue if the quench tank water level is below normal. Hot gases, steam and dirt could blow around the water seal and cause injury.

5.2 PRE-START PROCEDURES

5.2.2 INCINERATOR

COOLING SYSTEM PRE-START CHECKS

Prior to the functional check of the cooling system, a routine detailed check should have been performed on all related electrical power and instrumentation systems. Motors, pumps and control elements should be installed and individually checked according to the manufacturers' instructions.

Cooling System Static Checks

1. With the Cooling Loop Piping Schematic and the Cooling Skid Piping Assembly as references, inspect the entire system to ensure that all connections are correct and all manual valves are in their normal position and correctly tagged.

2. Inspect all hoses connected to transfer rams to see that they are free of kinks and potential chafing problems.

3. Before filling the system with water, see that the water softening system has been fully checked out and is functioning normally.

4. Temporarily close the manual valve downstream of the cooling skid supply pressure regulator and back off the pressure regulator pressure adjustment.

5. Open the soft water supply line valves to allow water to fill the supply line to the incinerator cooling loop.

6. Adjust the pressure regulator (by others) to a pressure of 10 psi on the downstream gauge.

7. Open the manual valve downstream of the pressure regulator, allowing water to flow into the incinerator cooling loop. If, during the system filling process, the gauge downstream of the regulator indicates the pressure is rising above 15 psi, the supply pressure should be reduced.

8. As the system fills with water, locate high points in the circuit and open air bleed valves or pipe connections until water flows from these points, then close or re-tighten.

9. Eventually the pressure at the skid will reach about 15 psi and the manual bypass valve should be closed.

10. Open the bleed valve at the bottom of the expansion tank until water flows, then close the valve.

11. The circulating pump must now be operated to clear the remaining trapped air from the system.

12. If trapped air is swept from the system, the water level in the expansion tank will fall. Water in the tank will replace the system air pockets without a change in system pressure.

5.2 PRE-START PROCEDURES

5.2.2 INCINERATOR

COOLING SYSTEM PRE-START CHECKS

13. Open the expansion tank bleed valve as necessary to allow excess system air to escape. Makeup water should flow simultaneously into the system if the pressure drops below 10 psi.

14. With the pump on, inspect all system lines and all water jackets, inside and outside incinerator, for leaks. If leaks are found in the lines, it may be possible to correct by tightening pipe fittings. If the leaks cannot be corrected in this way, or if leaks are found in the water jackets, it will be necessary to drain the system to make the necessary repairs before proceeding with the checkout process.

15. After all air has been cleared from the system and the expansion tank has come into equilibrium with no more makeup water flow, turn off the pump. System pressure, measured at the regulator, should remain unchanged at about 10 psi when the pump is turned off.

16. With the system in a static condition, record all pressure gauge and thermometer readings and compare with control panel instrumentation.

17. Re-start circulating pump and see that expansion tank is in equilibrium.

18. With circuit in operation, record all locally-mounted instrument readings and again compare with control panel instrumentation. Incinerator circuit flow should be 20 to 30 gpm. Pressure at the bottom of the system should not exceed 20 psi. Any appreciable variation from these values should be resolved before incinerators are operated.

19. Check back-up pump automatic start by manually closing the pump inlet valve until reduced output pressure trips the outlet pressure switch. Adjust the switches, if necessary, to get reliable operation.

20. Verify proper function of emergency cooling valves. With all manual valves in normal operating position, simulate a power failure by disconnecting power to pumps and cooling system controls. Verify water flow entering through bypass inlet solenoid valve #SV301-1 and exiting through outlet solenoid valve #SV301-2. If all preceding checks have been completed satisfactorily and instrument readings are consistent, the system is ready for full plant operation. During normal operation, the cooling system should receive the same daily attention as the rest if the incinerator plant, with logging of temperature and pressure data by each operator shift, and notation of any incidents of abnormal temperatures, pressures, or makeup water flow.
Pumps and other equipment should be serviced according to the manufacturers' recommendations.

Flexible hoses should be periodically checked for signs of wear or other deterioration of the outer jacket. Hoses may require replacement after two to three years of normal service.
Strainers should be serviced on a regular basis to prevent loss of water flow rate. Heat exchangers, especially water-to-air, will need periodic cleaning to maintain efficiency. Compression tank bleed should be checked occasionally to let out excessive accumulated air.

5.2 PRE-START PROCEDURES

5.2.2 INCINERATOR

COOLING SYSTEM PRE-START CHECKS

Cooling System Precautionary Notes

1 Use softened water in the system to prevent scale buildup. Consult a local water treatment specialist if scale or corrosion problems are indicated.

2. **Before Startup,** make sure all system drain valves are closed and water supply valves and pump inlet valves are open.

3. Always be sure the lower chamber water cooling system is turned on and functioning properly **before** starting incinerator.

4. **Do not** turn off lower chamber water cooling system during incinerator operation or until equipment has properly cooled (200° or lower in the lower chamber). Failure to comply will result in equipment damage.

IMPORTANT:

Keep all pumps in operating condition. Do not allow system performance to deteriorate over a period of time. Gradual loss of water flow or low efficiency of heat exchanger may cause excessive water usage and premature failure of system components.

5. When the system is started, the "auxiliary pump on" light will illuminate. This is normal and does not indicate a malfunction. The light will go out within a few seconds.

6. In the event of a main water circulating pump malfunction, the cooling system control panel "auxiliary pump on" light will illuminate and stay that way until corrective steps have been taken. It is very important to take immediate action to restore the main pump to service.

7. In the event of a **power failure**, the bypass inlet and outlet solenoid valves will open allowing city water to enter the system, circulate (once through), and exit the system. To prevent loss of water and anti-freeze, the gate dump (outlet) valve must be **manually closed after the system has cooled down.** Once the power is restored, this valve must be **manually opened** (See Drawing.

5.2 PRE-START PROCEDURES

5.2.2 INCINERATOR

COOLING SYSTEM PRE-START CHECKS

8. The cooling system controls **will not** shut down the incinerator. It is the operator's responsibility to monitor the warning lights and to take corrective action.

9. If the system is exposed to sub-freezing temperatures when incinerator is not in operation, all components must be drained or otherwise freeze protected.

10. Periodically examine the ram hoses to be sure they have freedom of movement and are not being abraded. Check that hose clamps are tight.

11. Vents, relief valves, and regulator valves should be piped to a safe discharge area.

12. For specific operation and maintenance procedures of cooling system components, refer to Manufacturers' Literature.

13. A water treatment additive with corrosion inhibitors is recommended for use in the closed loop cooling system.

COOLING SYSTEM SAFETY PRECAUTIONS

In addition to the general safety precautions presented at the beginning of this operating manual, the following specific precautions must be observed with the cooling system in operation:

1. Do not attempt to perform maintenance on any component of the cooling system without appropriate personal protection.
   Always first observe the temperature and pressure present in the component to be serviced. If possible, isolate the component with shutoff valves; but take precautions against residual pressure in the component or possible leaky valves.

2. Never perform maintenance on a cooling system component if there is a possibility of a rupture that would eject hot water. In most cases the circuit may be isolated from the main system and cooled to a lower temperature with the use of the auxiliary cold water flow from the booster pumps. In extreme cases it may be necessary to shut down part of the plant to provide adequate personnel safety.

3. Keep away from any hot surfaces that may not be completely insulated. Be especially careful if it is necessary to work around the system where there is little clearance, such as around the tap-in or the ash sump. Surface temperatures may be as high as 210° in some areas, and **no** uninsulated areas of the system are considered safe to touch without protection.

5.2 PRE-START PROCEDURES

5.2.2 INCINERATOR

HYDRAULIC POWER SYSTEM PRE-START CHECKS

1 Verify that the flexible hoses are connected between the power unit and the loader. Also, verify that all connections that were disconnected for shipment are re-connected.

2. Check sight glass on side of reservoir for proper fluid level. Turn disconnect on main pump to "on" position. Turn loader auto-manual switch, located on disconnect Motor Starter Panel, to the manual position.

3. Check the pressure on the discharge of the two pumps. Make sure the main pump setting is 1500 psig, and the conveyor pump is 1000 psig.

4. Have someone operate each of the incinerator and loader manual functions, one at a time, while someone inspects all hoses and connections associated with that function, including directional valve, dual reliefs and cylinders.

5. During operation of the incinerator and loader manual functions, keep check on the fluid level in the reservoir and fill as needed.

6. The hydraulic system is now ready for normal operation.

HYDRAULIC POWER SYSTEM SAFETY PRECAUTIONS

Each hydraulic power system reservoir is filled with synthetic fire resistant hydraulic fluid. This material is recommended for equipment protection, performance, and safety. Specific information on the recommended fluid is shown in the manufacturer's literature (Quaker Chemical Corporation, Quintolubric 822-220). This material should not be substituted or mixed with other fluids, as this could result in personnel injury as well as equipment damage. Use of hydraulic fluid other than Quintolubric 822-220 or equivalent synthetic fire resistant fluid **voids all warranties** on hydraulic components.

CAUTION

Before shutting down the hydraulic system, make sure all rams are in the home position, the firedoor is down and the loader hopper door is closed. The hydraulic system can now be shut down by opening the motor disconnect switch.

5.3 OPERATING INSTRUCTIONS

This section provides instructions for the start up, operation and shutdown of the primary equipment supplied by Consumat Systems, Inc. The operating instructions contained in this section should be studied by all operating personnel along with individual instructions for specific supplied equipment contained in the Manufacturers' Literature.

Operating instructions are provided for the following modes of operation:

- Start Up
- Normal Operations
- Shut Down
- Emergency Shutdown

The primary controls involved in the operation of the equipment have previously been discussed in Chapter OP-4 Instrumentation and Control System. This control description should be referred to in conjunction with these instructions.

Although many of the controls will operate automatically based on parameters preset by Consumat Systems, Inc., the operator still has a significant impact on operations. Only by thoroughly understanding the function of each control element can the operator control the process safely and efficiently.

5.3 OPERATING INSTRUCTIONS

5.3.1 INCINERATOR START UP AND OPERATION SEQUENCE

Prior to initial start-up, the operator must perform all pre-start checks described in Section 5.2 in order to verify the status of major components and to assure that the equipment is ready for startup. If all components are properly set, the incinerator start sequence can be begun. Primary controls for the startup sequence are located on the incinerator starter panel.

The startup sequence is as follows:

- All personnel accounted for and clear of equipment.
- All access and inspection doors secured.
- Check conveyor quench tank water level.
- Check that main city water supply valve is open.
- Water supply valves to lower chamber cooling system fully open.
- Turn on cooling pump and check discharge pressure.
- Check hydraulic fluid level.
- Check reagent level for dry scrubber.
- Check air compressor and receiver pressure.
- Check Lower and Upper Chamber blower intakes for obstructions.
- Check limit switches for debris.
- Clear rear of loader ram of debris.
- Turn on main disconnect switch.
- Turn on ash conveyor.
- Push POWER ON panel button.

5.3 OPERATING INSTRUCTIONS

5.3.1 INCINERATOR START UP AND OPERATION SEQUENCE

- Green POWER ON light comes on.
- Push INCINERATOR START panel button.
- Green INCINERATOR ON light comes on.
- Green UPPER CHAMBER BLOWER ON light comes on; blower is now operating.
- PRE-PURGE ON light (amber) comes on.
- At the end of pre-purge, upper chamber #1 burner tries for ignition. Pre-purge light goes out.
- Upper chamber burner ignites, green UPPER BURNER ON light comes on. Will turn off when MVTC setpoints are reached.
- Lower chamber burner ignites, green LOWER BURNER ON light comes on. The burner will be turned on and off according to timer and temperature demands.
- Check load cycle count at Quartech Data Entry station.
- Check temperature controller setpoints for correct settings.
- Turn loader POWER switch to ON.
- Turn loader MODE switch to AUTO.
- Turn ash removal POWER switch to ON.
- Turn transfer rams MODE switch to AUTO.
- Green READY TO LOAD light on Loader Panel turns on.
- Pendant station is now enabled.
- Push LOADER OPEN button, hopper door opens.
- After contents have been dumped into loader, push LOAD button. Hopper door closes.
- After hopper door has closed, the loading cycle will start automatically.

5.3 OPERATING INSTRUCTIONS

5.3.1 INCINERATOR START UP AND OPERATION SEQUENCE

- The loader sequence begins:

  (a) Fire door goes up; water spray turns on.

  (b) Loader ram extends full stroke, charging waste into unit.

  (c) Loader ram retracts just clear of the fire door

  (d) Fire door goes down; water spray turns off.

  (e) Loader ram retracts to home position.

- When Load Interval Timer times out, ash transfer sequence begins:

  (a) Ash conveyor starts if proper number of load cycles have occurred (See ASH COUNT timer).

  (b) Ash ram extends and retracts if proper number of load cycles have occurred. (See ASH COUNT Timer).

  (c) Transfer ram extends and retracts if proper number of load cycles have occurred. (See TRANSFER RAM COUNT Timer).

- Sequence starts over again at step #30.

NOTE: If the Load Interval Timer expires before another load of waste is charged into the incinerator, the timer will not reset, the yellow "Loader Operator Light" will come on, and ash transfer and removal operations will be suspended. In order to restore normal operation and insure that proper conditions for waste reduction are maintained, the operator must immediately load the hopper with waste and charge load into the incinerator. This action will reset the timer, extinguish the "Loader Operator Light" and restore automatic ash transfer and removal cycles.

NOTE: The frequency of the ash transfer ram activation will vary depending on the type and amount of waste processed and the quality/quantity of ash residue. The counter is located inside the controller and is preset at the factory, but may be changed in the field using the Quartech Data Entry station to enter the new count values.

5,3 OPERATING INSTRUCTIONS

5.3.2 NORMAL OPERATIONS

Once the major equipment has been started and proper conditions have been established, normal operation of the systems can be undertaken. Proper operation is very much a function of how the solid waste is sorted and charged. An effort should be made to load materials which, through tipping floor management, have been mixed as much as possible. For example, a load of wet material or a load of particularly "hot" material should be mixed with other stored material so as to buffer their effects as much as possible.

Although the incineration system materials handling capability is such that non-combustibles may be continually processed through the incinerator, a program of separation of bulk non-combustibles is recommended, since there is generally no significant energy content in such materials; moreover, processing these items may cause excessive wear and tear to incinerator hearths, rams, and ash conveyor.

A primary responsibility for proper operation rests with the loader operators, who must charge the solid waste fuel through the loader hopper. The loader interval is adjusted by the Modicon Controller to achieve maximum materials processing, and to maintain a constant temperature in the lower chamber. Under normal circumstances, the interval is more than sufficient for charging the loader hopper and performing other activities such as weighing and/or recording the waste material.

The proper charging at the required time is very important in assuring steady state conditions within the incinerator. All operators should understand their responsibility in maintaining the optimum efficiency of the facility.

Readings of the various system parameters should be recorded regularly by the operating staff. These include: upper and lower chamber temperatures; draft; cooling system temperature, pressures, flow rates and make-up water flow; malfunctions. The primary system can be monitored and controlled through the solid state controls provided within the process train.

5.3 OPERATING INSTRUCTIONS

5.3.3 BATCH OPERATION OF CS UNITS

CS-Model units are designed for continuous, 24 hour per day operation, but they may also be operated on a daily basis with burndown each evening. Loading rates for batch operation can be higher than for continuous operation since there is extra time available to burn down the waste each day.

When operating in a batch mode (loading the machine for only 8 to 12 hours per day), it is normally not necessary to cycle the ash ram automatically. Allowing the ash to build up gives a longer residence time and therefore, a better burndown, or ash quality. At the beginning of each day the operator should manually cycle the ash ram until the bulk of the ashes are removed from the incinerator. Run the conveyor on continuous until the quench tank is emptied of ashes. The transfer ram must still be cycled on a regular basis (every 2 to 4 loads) to keep the proper profile of waste in the lower chamber.

5.3.4 NORMAL SHUT DOWN

Normal shut down occurs when the loading of waste into the hopper ceases. The incinerator is equipped with a built in **burn down system** which uses a timer to control all electrical functions until the combustion process has completely subsided.

The timer is reset each time the loader fire door is opened and closed. The timer is usually set for 2-5 hours. It is located inside the controller and is preset, but may be changed in the field. Use the Quartech Data Entry station to check the current setting or to change the setting of this timer.

5.3 OPERATING INSTRUCTIONS

5.3.5 EMERGENCY SHUTDOWN

Emergency Situations

Only a few situations give cause to put out the lower chamber fire immediately.

These are:

1. Complete loss of cooling water.
2. Loss of upper chamber blower with the temperature rising over 2200°F.
3. Ram stopped in fire (Loader Ram, Transfer Ram, or Ash Ram).
4. Total loss of draft.
5. High Baghouse temperature.

In case of any of the above conditions, take action immediately, using the procedure below.

EMERGENCY SHUT DOWN PROCEDURE

1. Shut off the upper chamber blower disconnect switch.
2. Wear protective clothing and eye protection.
3. Standing **behind** the lower chamber inspection door, **slowly** open the inspection door 3 inches. After 15 seconds (to equalize pressure), slowly open the door all the way.
4. Use hose (fire hose if necessary) to spray water onto the fire until fire is out. **Keep water off of refractory**. (Water will cause hot refractory to crack and break).

CAUTION
Wear protective equipment and use extreme caution when the door is open and water is applied to the fire.

NOTE: Items 2 through 4 may be required if an overtemperature condition occurs resulting from an upper chamber blower failure and/or both cooling system pumps failing simultaneously.

TABLE OF CONTENTS

OP-6
MAINTENANCE PROGRAM

Section	Title	Page
6.0	General	OP-6-1
6.1	Maintenance Management Philosophy	OP-6-2
	Fig. 6-1 Preventative Maintenance Cost	OP-6-6
6.2	General Preventative Maintenance	
Preventative Maintenance Program		OP-6-6
	.1) Inspections & Tests	OP-6-6
	.2) Routine Upkeep	OP-6-8
	.3) Major Preventative Maintenance	OP-6-10
6.3	Recommended Program	OP-6-11
	Preventative Maintenance Schedule	OP-6-12
6.4	General Maintenance	OP-6-23
	.1) Hydraulic Oil Maintenance	OP-6-23
	.2) Hydraulic Hose Maintenance	OP-6-24
	.3) Bearing Maintenance	OP-6-26
	Fig. 6-3 Lubrication Guide	OP-6-28
6.5	Corrective Maintenance Program	
	.1) Introduction	OP-6-29
	.2) Refractory Failure	OP-6-29
	.3) Hydraulic Failure	OP-6-30
	.4) Wet Ash Conveyor Jam	OP-6-30
	.5) Electric Motors	OP-6-31
	.6) Thermocouples	OP-6-31
	.7) Controls Relays	OP-6-31
	.8) Limit Switches	OP-6-31
	.9) Critical Malfunctions	OP-6-32
	.10)Level I Malfunction Control	OP-6-33
	A. Internal Cooling Loop Failure	OP-6-33
	B. Loader Carriage Stopped in Fire	OP-6-34
	C. Transfer or Ash Ram Stopped in Fire	OP-6-35
6.6	Maintenance Safety	OP-6-36
	.1) Zero Mechanical State	OP-6-36
	.2) Lockout Program	OP-6-37
6.7	Spare Parts	OP-6-38
	.1) Recommended Spare Parts List	OP-6-39

6.0 GENERAL

The successful operation of any facility which utilizes a number of integrated mechanical and electrical systems is dependent on the manner in which the facility is operated and maintained. Operating equipment outside of its design parameters and ineffective maintenance programs may result in premature deterioration and failure of major equipment and systems.

Experience has shown that the Consumat Systems technology incorporated in this facility will provide long term, reliable, and efficient service **if operated and maintained properly**. The warranty does not cover parts damaged due to abuse or lack of maintenance. Each of the items listed in the Preventative Maintenance schedule in Section 6.3 is important in assuring continuing operation of the equipment.

This section provides a recommended maintenance program which will be necessary for proper operation. The maintenance program recommended and described in this portion of the manual should serve as the basis for minimum requirements in assuring longevity and efficiency of the facility and its systems. Reference should also be made to all Manufacturers' Literature contained in this manual for additional maintenance requirements on vendor supplied equipment. The procedures for operation and maintenance of specific components is included in the Manufacturer's Literature furnished for those components. The individual manufacturer's instructions should be incorporated into the overall maintenance program of the facility and should be regarded as part of this manual.

Replacement parts are available from Consumat Systems, Inc., through your dealer. A list of recommended spare parts is provided at the end of this section .

6.1 MAINTENANCE MANAGEMENT PHILOSOPHY

There are two forms of maintenance:

- **Corrective Maintenance**
- **Preventative Maintenance**

CORRECTIVE MAINTENANCE consists of making repairs as required when equipment breaks down. Since breakdowns can not usually be planned, the consequential loss of production at the facility must be added to the cost of repair so as to determine the full economic impact of breakdowns. Breakdowns cannot be avoided in a complex grouping of systems such as those installed at this facility. However, opportunities do exist to keep breakdowns at levels which are programmed into the facility's operational expectations. Failure to monitor, inspect and maintain equipment will ultimately result in unscheduled repairs. Effective preventative maintenance can dramatically reduce the occurance of unscheduled repairs which require unscheduled shut-downs.

PREVENTATIVE MAINTENANCE can be defined as:

- Periodic inspection of the facility and its equipment to uncover conditions which could eventually lead to breakdowns or harmful depreciation.
- Upkeep of the facility to avoid conditions which could lead to breakdowns or harmful depreciation, or to adjust or repair them while they are still minor.
- The avoidance of future equipment difficulties by making minor repairs in advance of major operating difficulties.
- Replacements, adjustments, major overhauls, inspections preplanned and scheduled on a cycle which will maintain the equipment at normal efficiency.
- The action performed on equipment to maintain an uninterrupted operation within design characteristics or to detect and/or prevent failures before they occur.
- Any activity which reduces equipment failures, reduces the magnitude of equipment repairs or repair costs, reduces downtime due to equipment failure or repair, reduces deterioration in the productive capacity of equipment.
- A policy of operating equipment properly and within its range of capability.

6.1 MAINTENANCE MANAGEMENT PHILOSOPHY

Experience has shown that in any type of processing facility, where a significant amount of equipment is utilized, there is a direct relationship between the degree of preventative maintenance (PM) and the level of corrective maintenance required. Logically, there is a level of preventative maintenance at which cost effectiveness of a PM program is lost. An extremely high level of preventative maintenance could lead to a **theoretical** level at which no unplanned repairs are experienced. The cost of this idealistic level of preventative maintenance, however, is prohibitive. Similarly, the cost of corrective maintenance, when very little or no preventive maintenance is performed, may also be prohibitive. The program described in this section recognizes the need for both preventative and corrective maintenance in the operation of the facility.

The maintenance management recommendation assumes that both preventative and corrective maintenance will be made part of the operational procedures at the plant. The emphasis, however, will be on the recommended preventative maintenance program so as to minimize the level of corrective maintenance required. In a general sense, the objectives of the recommended PM program will be to:

- Define and achieve uniform preventative maintenance standards, criteria and procedures in the operation.
- Assist facility personnel by promoting effective utilization of available manpower, and material.
- Document the requirements for and the accomplishment of preventative maintenance.
- Retain and utilize the knowledge and skill of experienced mechanics by documented procedures.
- Reduce complex maintenance activities involving equipment to simplified procedures that are easily identified, understood and managed.
- Reduce the amount of corrective maintenance.
- Reduce overall maintenance expenditures.
- Reduce equipment failures and resultant forced downtime.

6.1 MAINTENANCE MANAGEMENT PHILOSOPHY

It is important to remember that effective preventative maintenance is more a philosophy of operation rather than a method utilized in the operation. Consumat Systems' recommendations for the operation and maintenance of this facility assume that this philosophy is adopted by **each member** of the owner's management and operating staff. Consumat Systems' experience has shown that if an effective PM program is utilized in the operation of the facility, a number of benefits will be derived. These will include:

- Unit availability is increased by reducing downtime of equipment for major or corrective maintenance, thereby reducing the extent and duration of scheduled and unscheduled downtime.

- Maintenance costs, both direct and indirect, are reduced. An effective PM Program reduces the number and severity of equipment breakdowns, saving the cost of major repairs and/or equipment replacements. In addition to the reduction of direct maintenance costs, the indirect costs attributable to the unavailability of the facility or its systems to generate steam is reduced.

- Fewer large scale and repetitive repairs are needed, allowing more effective use of available manpower or financial resources.

- Postponement or elimination of expenditures for premature replacement of equipment.

- Preventative maintenance activities are all preplanned and scheduled, thus facilitating the efficient and convenient programming of maintenance work. This significantly improves the planning and scheduling of all maintenance management activities.

- The PM Program enhances the overall management of the facility by providing an orderly and organized approach to the maintenance management function.

- Employee morale is increased by enhancing the feeling of effectiveness on the part of the facility employees.

6.1 MAINTENANCE MANAGEMENT PHILOSOPHY

Consumat Systems' experience in operating plants and feedback from numerous other operators has led to the maintenance program recommended in this manual. The experience has helped us identify the "critical" equipment which should receive priority in the program. This experience has also helped determine the form of preventative maintenance as well as the frequency. In addition, recommendations from other manufacturers of key equipment should be incorporated in the program. Specific manufacturer's literature has been included as a part of this operations manual, and all procedures contained in that literature are an important part of any maintenance program.

6.2 GENERAL PREVENTATIVE MAINTENANCE PROGRAM

The general maintenance program structure which should be incorporated into the facility procedures is shown in Figure 6-1. As shown, the PM Program is broken down into three categories. These are:

- Inspections and Tests
- Routine Upkeep PM Tasks
- Fixed and Variable Interval Major PM Tasks

Each of these major categories may be further divided into individual functions which are geared to the facility's requirements. Some of these functions are shown in Figure 6-1.

GENERAL MAINTENANCE PROGRAM STRUCTURE

INSPECTIONS AND TESTS	ROUTINE UPKEEP PM TASKS	FIXED/VARIABLE INTERVAL MAJOR PM
Vibration monitoring	Lubrication	Equipment Overhaul
Monitor Operating Parameters	Filter/Strainer Change	Inactive Equipment PM
Noise Levels	Painting	Seasonal PM
Area Cleanliness	Vehicle Service	Start-Up PM
Lubricant Conditions	Building/Facility Repairs	Chemical Cleaning
Chemical Analysis	Safety Equipment Service	Safety Valve Setting
Mechanical Inspections	I & C Calibrations	Valve Packing
Electrical Inspections	Electrical Equipment Service	
Equipment Functional Checks	Mechanical Equipment Service	
Instrument Checks		
Safety Inspections		
Crane, Hoist Inspections		
Fire Protection Equipment Inspection		

FIGURE 6.1

6.2 GENERAL PREVENTATIVE MAINTENANCE PROGRAM

In recognition of the fact that this manual is to serve as both an operational and training guide, each of the categories and functions are discussed as follows:

6.2.1 INSPECTIONS AND TESTS

The inspection of critical equipment is a key part of any PM Program. The purpose of inspection is to identify and correct unfavorable conditions which may be in the development stage in order to prevent breakdown.

Inspection activities are accomplished in a variety of ways. These may include: visual inspections, monitoring of normal operating parameters, measuring and analyzing special data, and the performance of specific tests. The primary types of visual inspections which are included in the recommended PM program are as follows:

- **Vibration Monitoring** - The monitoring of vibration levels through touch or noise of major rotating equipment, such as blowers or I.D. fan, is very effective in detecting potential failures and allowing corrective action to be initiated before breakdown occurs. Many major equipment failures can be predicted by vibration monitoring. Many items, such as ID fans and combustion airblowers, are crucial to the operation of the facility and excessive vibration is often an indicator of a potential problem. Use of a vibration monitor is also a helpful tool to detect excessive vibrations.

- **Monitoring Operating Parameters** - The periodic monitoring, or, in many cases, continuous monitoring of operating parameters, such as incinerator temperatures, cooling loop temperatures, steam temperature *(with optional heat recovery boiler)*, pressure and flow provides a relatively simple method of detecting impending problems or failures.

- **Noise Levels** - Unusual noise or sounds emanating from operating equipment may indicate a problem and potential breakdown. The monitoring of noise levels with the human ear during the course of normal duties can provide good input to a preventive maintenance program. Operating staff as well as maintenance staff can provide this monitoring with subsequent reports to management.

- **Area Cleanliness** - The cleanliness of equipment and the area around it can provide useful information regarding its operating condition. Oil, water and hydraulic fluid accumulated under equipment are good indicators of leakage or malfunction. **Good housekeeping is usually a good indicator of the quality of other programs and the overall condition of the plant.**

- **Lubricant Condition** - Periodic inspection and testing of lubricants provides an excellent means of predicting equipment failures. Both visual and chemical analyses may be used to determine lubricant condition.

6.2 GENERAL PREVENTATIVE MAINTENANCE PROGRAM
6.2.1 INSPECTIONS AND TESTS

- **Mechanical and Electrical Inspections** - The routine inspection of mechanical and electrical equipment provides a good method to assure that such equipment is in good condition and to detect abnormal conditions. Many of these inspections are required by OSHA. These may include hoists, conveyors, machinery guards, etc. Insurance requirements such as fire protection should also be considered.

- **Functional Tests** - In some cases, it is necessary to test equipment to assure it is performing within its specifications. Functional tests of individual components, either on a special or routine basis should be performed to ensure efficient operation.

- **Instruments Checks** - To assure that instrumentation and controls are in operable condition, routine inspections and checks of operability should be made as part of the PM Program.

- **Safety Inspections** - Safety inspections of systems and equipment should be conducted on a routine periodic basis to assure that potential hazards to personnel and equipment are identified and corrective action initiated. OSHA (Occupational Safety and Health Act) 29 CFR 1910 specifies many safety inspections that should be conducted. Inspections are also required to satisfy certain insurance requirements.

6.2 GENERAL PREVENTATIVE MAINTENANCE PROGRAM

6.2.1 INSPECTIONS AND TESTS

- **Fire Protection** - There is a significant amount of fire protection equipment which may be installed in the plant. The fire protection systems (sprinklers, etc.) should be included in the PM Program. Appropriate checks and inspections required by OSHA or fire insurance requirements must be performed on a periodic basis.

The above listing is not necessarily complete, however, it provides a basis for initiating a comprehensive preventive maintenance program for the facility. As the PM Program matures, additional inspections and tests may be incorporated into the program. Consumat Systems would welcome your comments on expanding the preventative maintenance guidelines contained in this manual.

6.2.2 ROUTINE UPKEEP PM TASKS

The old adage, "an ounce of prevention is worth a pound of cure" describes the basic reason for performing routine upkeep PM tasks. The performance of routine periodic maintenance on equipment improves its reliability and extends its service life by maintaining optimum equipment conditions. The routine upkeep PM tasks on a specific piece of equipment usually requires a short time to complete and is conducted on a regular schedule. Typical routine upkeep PM tasks are briefly discussed below:

- **Lubrication** - Most major equipment installed in this facility include moving and rotating parts requiring some type of lubrication to reduce wear and assure proper operation. Therefore, lubrication is a major part of any program to minimize maintenance costs. For a lubrication program to be effective, it must be consistent, disciplined, and technically sound.

- **Filter/Strainer Change/Cleaning** - Filters or strainers are installed to remove contaminants from fluid systems. To be effective and to minimize adverse consequences within the system, it is important that the filters or strainers be periodically changed or cleaned.

- **Cleaning and Painting** - Good housekeeping and cleanliness help provide environmental conditions conducive to trouble free equipment operation. Responsibility for cleaning is usually assigned to all personnel at the facility with specific assignments to shifts and personnel classifications. Regular cleaning activities, routes and schedules should be established. Although there may be a tendency to underestimate the importance of cleanliness, experience typically indicates that those plants with good operating records usually practice good housekeeping. Good housekeeping can provide significant benefits, often unseen. Painting protects the equipment from corrosion and improves the appearance of the plant.

6.2 GENERAL PREVENTATIVE MAINTENANCE PROGRAM
6.2.2 ROUTINE UPKEEP PM TASKS

- **Vehicle Service** - A vehicle PM Program for front-end loaders, forklifts, trucks, etc. should be established. Periodic inspections and routine upkeep should be scheduled on a periodic basis. If onsite facilities are not available, arrangement should be made to perform major vehicle PM offsite at local garages.

- **Building and Facilities** - Facilities and buildings perform an important support function. In addition to providing the work environment for plant personnel, buildings also provide the operating environment for equipment. Buildings and facilities protect equipment from the outside environment such as rain and temperature extremes and provide a conditioned environment for some equipment. Because of the natural degradation of buildings and systems, it is important that a PM Program be established to maintain buildings and facilities in a good condition.

- **Safety Equipment** - Routine upkeep of safety equipment may include charging of fire extinguishers, repair of equipment guards, etc. Inclusion of safety and personnel protective equipment in the PM Program provides a good means of scheduling and monitoring these vital activities. OSHA regulations, in fact, require routine inspection, cleaning and maintenance of personal protective equipment such as respirators.

- **Instrumentation and Control Calibrations** - The instrumentation and control system of the plant should be maintained in optimum condition to assure the reliable and efficient operation of the facility. In addition to the routine inspections previously discussed, major instrumentation and control equipment should be calibrated on a routine periodic schedule as a part of the PM Program. Calibrations and functional checks of instrumentation and control equipment and systems will assist in maintaining optimum conditions. Alarms and interlocks should also be included in the program.

6.2 GENERAL PREVENTATIVE MAINTENANCE PROGRAM
6.2.2 ROUTINE UPKEEP PM TASKS

- **Electrical Equipment Adjustments** - Some electrical equipment may require routine adjustments to assure optimum operation. The adjustments should be scheduled and controlled by the PM Program. Amperage checks should be routinely performed on critical motors to establish baseline data for monitoring condition of the equipment.

- **Mechanical Equipment Adjustments** - Mechanical equipment may require routine adjustment to assure optimum operation and should be included in the PM Program.

6.2.3 FIXED AND VARIABLE INTERVAL MAJOR PM

The final category of PM activities is fixed and variable interval major PM. Included in this category are PM inspections and upkeep performed during major overhauls, seasonal PM, etc. The scope and complexity of an individual fixed and variable PM activity is usually greater than the other categories. Each of the major activities included in this category are summarized below:

- **Startup Maintenance** - A critical time during equipment life occurs when it is started following maintenance activities, especially if it involved disassembly. Problems during startup can be caused by improper maintenance, break-in of new components, or unusual system conditions. It is important that procedures be established for returning equipment to service following major maintenance activities, to assure that the equipment is functional.

- **Routine Overhaul** - During an outage, various types of inspections are performed. Most of the work done during an overhaul period should be major PM, for example, the disassembly and inspection of major equipment such as blowers, fans, pumps, etc.
The frequency and duration of the overhaul may vary depending on the equipment scheduled to be overhauled. These outages should be planned and scheduled well in advance, because the PM procedures may be extensive and complex.

6.3 RECOMMENDED PROGRAM

The specific maintenance plan for the facility should incorporate all equipment in the facility. The operating staff should prepare a regular preventative maintenance schedule which includes all equipment.

The recommended preventative maintenance plan and schedule contained in this manual is solely for major equipment provided within Consumat Systems' scope of supply. The recommendations of suppliers of other equipment incorporated into the facility should be utilized in addition to the recommendations contained in this manual. The recommendations of individual component manufactures contained in the manufacturer's literature section of this manual should be incorporated as well. The recommended preventative maintenance schedule is shown on the following pages. Each of the items listed in the Preventative Maintenance Schedule is important in assuring safe, reliable, efficient operation of the equipment. It should also be remembered that the warranty may be voided should required preventative maintenance not be performed and documented.

The proper operation of all equipment is, by far, the most important preventative maintenance task required for the assured success of the facility. The coordination of maintenance and operating personnel must assure that their actions are not counter productive and are in the best interest of the facility performance.

A key element of the preventative maintenance program is to inspect key components for operation or minor problems which, if uncorrected, could cause major failure and system downtime. Certain key elements will require immediate repair, while others may be scheduled for a convenient time when the system may be available for repair. An understanding of the function of each system and component should indicate the items which are crucial and require immediate attention and repair. This prioritization of repair is discussed in Section 6.5, Corrective Maintenance.

It is recommended that a checklist/report procedure be established through which plant management may continually review the performance of preventative maintenance and the results of inspections performed as part of the programs. This will assure that items needing repair will receive attention as quickly as possible. The preventative maintenance program will only be successful if the inspections performed as part of the program lead to timely repairs when required. If the observations of required repairs during PM inspections are ignored, failures may occur which cause significant downtime and excessive future repair costs.

6.4 RECOMMENDED MINIMUM SCHEDULE
DAILY TASKS

GENERAL

1. Inspect the reports of foremen, mechanic(s), operator(s) and rolling stock operators from previous shifts.

2. Observe and document setpoints and operating conditions of temperature controllers and indicators, pressure and flow, draft, pressure drops, etc.

LOADER

1. Check loader hopper door lids for proper closure and soundness. Verify proper operation of hopper doors.

2. Clean loader carriage of accumulated debris and dust.

3. Inspect loader carriage limit switch pulley, and cable assembly. Verify proper operation of loader.

4. Check and secure the hydraulic cylinder mounts.

5. Inspect the hydraulic system cylinders and pipes for leaks.

6. Inspect loader pistons and cotter pins.

7. Inspect hopper door cylinders and hoses for leaks.

8. On a daily basis or as needed, lubricate or oil all loader moving parts, including the undercarriage racks and wheels.

LOWER CHAMBER

1. Inspect fire door cylinders and hoses for leaks.

2. Check fire door hydraulic cylinder mounting bolts and alignment.

3. Adjust fire door hydraulic flow controls so that fire door rises and closes without shock.

4. Inspect and adjust, if necessary, fire door limit switches.

5. Inspect fire door for hot spots inside of the hopper when system is off. Hotspots indicate refractory failure in a localized area. Hotspots can be detected by discoloration of metal (white). If not repaired during normal operating cycle, eventual material failure may occur.

6. Inspect and verify complete cycling and operation of all transfer rams. Secure, if required, transfer ram mounting pins. Verify cylinder is screwed into ram fully.

7. Inspect and secure all air tube mounting brackets.

6.4 RECOMMENDED MINIMUM SCHEDULE
DAILY TASKS

LOWER CHAMBER

8. Inspect and adjust, if necessary, transfer and ash ram limit switches.

9. Inspect and adjust, if necessary, transfer ram wipers.

10. Lubricate all moving parts including ram guide wheels, slides and racks on a daily basis or as required. See Lubrication guide.

11. Inspect and repair all permanently mounted lights under the lower chambers.

12. Inspect all conduit and junction boxes for heat or water damage.

ASH HANDLING

1. Verify over pressure alarm setting on incinerator ash conveyor.

2. Remove debris from and inspect ash conveyor shaft and cogs.

3. Verify proper operation of the ash conveyor on timed or continuous cycle.

4. Check water level in the ash quench tank and verify operation of the ash quench tank float valve.

5. Inspect ash system chain links, pins, wear plates and tank.

6. Lubricate all ash conveyor bearings.

7. Inspect ash conveyor drag chain for tension and alignment. Adjust as required.

6.4 RECOMMENDED MINIMUM SCHEDULE
DAILY TASKS

UPPER CHAMBER BLOWER

1. Inspect operation of combustion air blower for noise, vibration, and function monitoring.

2. Check operation of all dampers, linkage assemblies, and modulating motors.

3. Verify air flow through combustion tubes by removing orifice on inlet of combustion tube.

4. Lubricate all damper and actuator linkage assemblies.

HYDRAULIC

1. Verify hydraulic pressure. Normal operating pressure is 1200-1500 psi incinerator, and 600 - 800 psi for conveyor.

2. Verify and adjust, if required, hydraulic fluid levels in all system reservoirs. (See annual maintenance for oil changes.) Never operate above 140°F. Ideal operation is 100°F - 130°F.

3. Inspect for leaks in all hydraulic components.

4. Inspect hydraulic flow valves and fittings on solenoid valves.

5. Check hydraulic system return line filter gauge and replace return line filter, if required.

6. Inspect and clean hydraulic system motors and pumps, including drive couplings.

7. Verify operation of tank level cut-off switch.

8. Add make-up fluid as necessary. Use fire resistant hydraulic fluid, Quaker , Quintolubric 822 - 220.

6.4 RECOMMENDED MINIMUM SCHEDULE
DAILY TASKS

COOLING SYSTEM

1. Inspect hoses, lines and components for leaks, abrasions, kinks, etc.
2. Check and document cooling system temperatures and pressures.
3. Verify proper operation and automatic sequence of all motors and pumps.
4. Inspect and verify operation of all temperature/pressure switches.
5. Verify operation of all temperature bypass valves.
6. Inspect and clean cooling system heat exchanger(s).
7. Verify operation of radiator temperature switch.
8. Inspect pressure relief valves.

CONTROL SYSTEM

1. Inspect loader operator pendant station for loose wires.
2. Verify proper operating sequence and control operation from panel indicator lights.
3. Verify that settings on all temperature controllers are at normal design set points.
4. Replace all control box bulbs as required.

QUENCH CHAMBER

1. Verify that modulating quench water valve controls are operating to maintain temperature setpoint.
2. Verify temperature setpoints for control and alarm functions.
3. Inspect for any signs of water weeping from the chamber.
4. Inspect the vessel exterior for signs of corrosion.
5. Verify water and air pressure available at the nozzle(s).

6.4 RECOMMENDED MINIMUM SCHEDULE
DAILY TASKS

GENERAL

1. Verify full open positions on all required water valves including cooling system supply, water sprays and ash conveyor quench tank makeup water.

2. Inspect and clean all cooling fins and screens on electric motors daily using air hose. Inspect motor for bad bearings while operating. Bearings will usually make a grinding noise prior to becoming defective. See Lubrication Guide, Figure 6-3).

3. Inspect for leaks on all hydraulic water, air and fuel lines.

4. Inspect all areas for safety considerations.

5. Check air compressor, air dryer and regulators for proper operation.

6. Blow down air receiver.

7. Check air compressor intake filters and replace as necessary.

8. Inspect operation of the I.D. fan, including noise, vibration, etc.

9. Lubricate the I.D. fan damper linkage assembly.

10. Inspect lime feed system to ensure open flow and clean as necessary.

11. Perform any maintenance/inspection required on ancillary equipment such as reagent storage/feed system, compressor, pollution control devices, etc. Refer to the maintenance instructions provided in the manufacturer's literature for these components.

6.4 RECOMMENDED MINIMUM SCHEDULE
WEEKLY TASKS

LOADER

1. Lubricate loader carriage wheels and limit switch pulley and cable assembly weekly, or as required.

2. Lubricate loader hopper door bearing and hold down brackets.

COOLING SYSTEM

1. Clean and inspect fan drive on radiator. Lubricate as required.

2. Open water traps and dump valves on cooling loop (blow down).

BELTS

1. Inspect drive belts (if applicable) on upper chamber blower, I.D. fan, burner combustion air fan, and cooling fans. Check for tension, alignment, and damage. Tighten or replace as required.

LOWER CHAMBER FIRE DOOR *

1. Inspect and clean fire door shroud around hydraulic cylinder shafts.

2. Inspect fire door water spray for quantity and pattern of water spray.

3. Inspect and verify operation of fire door safety valve (raise door - cut power - fire door should drift down to a closed position).

AIR TUBES *

1. Clean all underfire air tubes and check for proper air supply to all tubes. Inspect and clean only when system is down.

* **TO BE PERFORMED WITH INCINERATOR SHUT DOWN AND LOCKED OUT OF SERVICE.**

6.4 RECOMMENDED MINIMUM SCHEDULE
BI-WEEKLY TASKS

MOD MOTORS / PNEUMATIC ACTUATORS

1. Lubricate all modulating valve linkages on combustion air dampers, main burner fuel valves, and I.D. fan damper.

UPPER CHAMBER BLOWER

1. Lubricate bearings on upper chamber blower.

ASH CONVEYOR

1. Drain ash quench tank. Clean and refill. Inspect all below water components.

COOLING FAN

1. Lubricate bearings of cooling fan, following manufacturer's specifications .

I.D. FAN

1. Lubricate I.D. Fan bearings as needed. Follow fan manufacturer's recommendation for lubrication frequency. Grease while in operation.

2. Inspect damper control.

6.4 RECOMMENDED MINIMUM SCHEDULE MONTHLY TASKS

AIR LINES

1. Blow out lines to magnehelic and photohelic gauges with low air pressure. Introduce low pressure air from the instrument connection end of the air line. *Do not introduce air pressure to the instrument.*

FIRE DOOR

1. Lubricate wheels and guides on fire door.

BURNERS

1. Inspect condition and connection of ignition leads to burners.
2. Clean the face of the flame detector sensor monthly or as needed.
3. Clean and inspect ignitors.
4. Clean and inspect pilot assemblies.
5. Verify burner failure indication.

COOLING SYSTEM

1. Verify operation of cooling system failsafe mechanisms.

HYDRAULIC SYSTEM

1. Replace return line filter on each power unit.

GENERAL

1. Remove observation cover from screw conveyor. Check condition of flites and housing interior. Look for corrosion, pitting, physical damage or signs of mechanical abuse.
2. Inspect all access openings for any signs of air leakage. Ensure that "pokehole" cover caps are secure.
3. Thoroughly clean I.D. fan blades (self cleaning fan blades, as well).
4. Inspect all drive belts and chains. Replace as necessary.
5. Inspect bolts and fasteners, tightening as necessary.

6.4 RECOMMENDED MINIMUM SCHEDULE SEMI-ANNUAL TASKS

HYDRAULIC SYSTEM

1. Clean inlet filter in hydraulic system reservoir.

GENERAL

1. Calibrate all instruments including pressure, temperature, flow gauges, indicators, controllers and recorders.

ANNUAL TASKS

HYDRAULIC SYSTEM

1. Change hydraulic oil in each power unit reservoir. Replacement fluid is available from Consumat Systems, Inc. through your dealer. **Use only Quintolubric 822-220 fire resistant fluid.**

GENERAL

1. Perform leak test of fabric filter bags.

2. Inspect complete interior, noting any excessive corrosion or weld joint cracks. Repair if necessary.

6.5 INCINERATOR SHUTDOWN TASKS

NOTE
WHEN INCINERATORS ARE TAKEN OFF LINE, CERTAIN P.M. TASKS SHOULD BE PERFORMED (AT LEAST ONCE PER MONTH).

LOWER CHAMBER

1. Clean out lower chamber of accumulated residue.

2. Remove excess slag from hearth flue ports, sidewalls and burner mounts in lower chamber.

3. Inspect lower and upper chamber for damage.

4. Inspect lower chamber hearth for excessive wear.

5. Inspect front of transfer rams for wear and leaks.

6. Inspect and clean all underfire air tubes. Check for leaks or excessive wear.

7. Inspect and verify operation of lower chamber water spray nozzles.

8. Inspect and clean lower chamber thermocouple. Adjust to extend at least 4" into chamber.

9. Inspect water cooled components for leakage, excessive wear, or warpage.

10. Inspect ash sump for water leakage or ram interference.

11. Inspect and verify operation of ash sump water spray nozzles.

12. Inspect all access door gaskets. Replace segments as necessary.

UPPER CHAMBER

1. Inspect upper chamber for slag accumulation blocking combustion air inlet ports, breeching from lower chamber, and thermocouple locations. Clean as required.

2. Inspect and clean upper chamber thermocouple(s). Replace as necessary.

3. Inspect all access door gaskets. Replace gasketing material as necessary.

6.5 INCINERATOR SHUTDOWN TASKS

NOTE
WHEN INCINERATORS ARE TAKEN OFF LINE, CERTAIN P.M. TASKS SHOULD BE PERFORMED (AT LEAST ONCE PER MONTH).

BURNERS	1. Inspect, dismantle, and clean upper and lower chamber burner assemblies.
COMBUSTION AIR BLOWER	1. Inspect and verify operation of combustion air, blower motor, modulating motor, potentiometer, and damper.

6.6 GENERAL MAINTENANCE

Due to the nature of the materials handled, additional discussion follows concerning:

- Hydraulic Oil Maintenance
- Hydraulic Hose Maintenance
- Bearing Maintenance

6.6.1 HYDRAULIC OIL MAINTENANCE

A. Storage

1. Keep storage drums out of the inclement weather--inside a building if possible.
2. Clean up any spilled oil in any area--spilled hydraulic oil is a safety hazard.
3. Rack the drums on their sides in an accessible location.

B. Access

1. Clean the tops of the drums before unscrewing the lugs.
2. Pour only into a clean, covered, lint-free container.
3. Mix only similar oils.
4. Filter the fresh oil as it goes into the reservoir.
5. Replace bungs tightly. Never store hydraulic oil in an open container.

6.6.1 HYDRAULIC OIL MAINTENANCE

C. Changeover

1. Remove all the old fluid. Blow out lines that will not drain.
2. Flush the system, using approved solvents or cleaners.
3. Change filter elements.
4. Clean the reservoir and repaint the interior with a sealer compatible with the new hydraulic oil.
5. Add fluid through a filter.
6. Prime pump, if necessary.
7. Run pump under no load conditions until all air has been purged.
8. Check level in reservoir.
9. Never change fluid types or mix fluids until a careful check as to compatibility has been made.
10. Whenever there is a question of compatibility, contact the factory or the fluid manufacturer.

6.6.2 HYDRAULIC HOSE MAINTENANCE

Proper hydraulic hose maintenance on plant equipment can save time and money. Costs can be cut through the choice of proper hose and fittings. Time can be saved by keeping equipment in service and minimizing downtime.

Hydraulic hose inspection and repair should be a regular part of all equipment maintenance programs. Hoses can fail because of abrasion, age, exposure to high internal or external temperatures, kinking, accidental cutting, and pressure surges beyond the hoses' rated pressure capacity. Sometimes couplings will develop leaks, even if they have been properly assembled and seated at installation. Whatever the cause, a failed, leaking, or suspect hose assembly must be replaced quickly to prevent risk to plant equipment, injury to personnel, and a fire hazard.

6.6.2 HYDRAULIC HOSE MAINTENANCE

Observe these precautions:

1. Do not unpack hose until it is needed.
2. Store hose at a temperature between 50°F and 75°F and at a humidity between 20% and 70%.
3. Never store hose in a hot damp room, in direct sunlight, or near heat sources.
4. Before replacing a hose, carefully identify the hose that failed. Find out if the replacement must handle synthetic fluids and determine system pressure.
5. Check nipples and coupling stems for burrs.
6. Use the proper size of shank. Never try to pull the hose down around a shank that is too small.
7. Do not drag hoses over abrasive surfaces.
8. Do not pull assemblies by the coupling.
9. Never use a hose at a working pressure above its rated pressure. (This point is elementary, but this type of abuse is one of the most common causes of premature failures.)
10. Inspect hoses regularly for loose covers, bulges, soft spots, and coupling leaks. Replace defective hoses before they fail.

6.6.3 BEARING MAINTENANCE

Due to the importance of bearings on any rotating component, special attention should be given to their maintenance and replacement. Proper and timely lubrication is **essential** to prevent premature breakdowns of equipment. Bearings should be maintained in strict accordance with instructions issued by manufacturer, as to proper lubricant and interval recommendations for service and temperature involved.

- Establish a definite schedule for inspection and lubrication.
- Avoid over-lubrication, which causes overheating (resulting from churning of lubricant) and damages seals.
- Avoid contaminating bearing with dirt. Wipe off fittings and nozzle of grease gun before adding small amount of clean fresh grease.

A. High Speed Operation

In the higher speed ranges, too much grease will cause overheating. The amount of grease that the bearing will take for a particular high speed application can only be determined by experience. If excess grease in the bearing causes overheating, it will be necessary to remove the grease fitting to permit excess grease to escape. The bearing has been greased at the factory and is ready to run. When establishing a re-lubricant schedule, note that a small amount of grease at frequent intervals is preferable to a large amount at infrequent intervals.

6.6.3 BEARING MAINTENANCE

B. Operation in the Presence of Dust or Water

Under these conditions, the bearing should contain as much grease as speed will permit since a full bearing with consequent slight leakage is the best protection against entrance of foreign material. In the higher speed ranges, too much grease will cause over-heating. In the lower speed ranges, it is advisable to add extra grease to a new bearing before putting into operation. Bearing should be greased as often as necessary (daily if required) to maintain a slight leakage at the seals.

C. Operating Temperature

Abnormal bearing temperature may indicate faulty lubrication. Normal temperature may range from "cool to the touch," up to a point "too hot to touch for more than a few seconds," depending on bearing size and speed, and surrounding conditions.

Usually high temperature accompanied by excessive leakage of grease indicates too much grease or the wrong grease for a high temperature application. High temperature with no grease showing at the seals, particularly if the bearing seems noisy, usually indicates too little grease. Normal temperature and a slight showing of grease at the seals indicate proper lubrication.

D. Kind of Grease

Many ordinary cup greases will disintegrate at speeds far below those at which Consumat Systems' selected bearings will operate successfully if proper grease is used. Bearings have been lubricated at the factory with No. 2 consistency lithium base high temperature grease which is suitable for normal operating conditions. Re-lubricate with lithium base grease or a grease which is compatible with original lubricant and suitable for ball bearing service. Recommendations for specific applications are shown in the lubrication guide. In unusual or doubtful cases, the recommendation of a reputable grease manufacturer should be secured.

6.6.3 BEARING MAINTENANCE

E. Normal Operation

Bearings are normally greased by the manufacturer and are ready to run. The following table is a general guide for re-lubrication. However, certain conditions may require a change of lubrication periods as dictated by experience.

LUBRICATION GUIDE

Suggested Lubrication Period in Weeks

Run Time hrs/day	1-250 RPM	251-500 RPM	501-750 RPM	751-1000 RPM	1001-1500 RPM	1501-2000 RPM	2001-2500 RPM	2501-3000 RPM
8	12	12	10	7	5	4	3	2
16	12	7	5	4	2	2	1	1
24	10	5	3	2	1	1	1	1

RECOMMENDATIONS

All Motors and Process Equipment - Lithplex (Texas Refinery) Extreme Temperature and Pressure.

Refer to manufacturer's literature for each component for specific recommendations

6.7 CORRECTIVE MAINTENANCE PROGRAM

6.7.1 INTRODUCTION

Even the most thorough preventative maintenance program will not eliminate the need for corrective maintenance. Unscheduled and emergency repairs will be required in the operation of the facility. Maintaining an adequate supply of commonly used spare parts (available from Consumat Systems) will allow for quick repairs and reduce downtime. A chapter of the manual is devoted to troubleshooting of malfunctions which could occur during operation of the equipment. This should assist in minimizing the time required to identify causes and remedies for specific malfunctions.

Consumat Systems' extensive experience with municipal, institutional, and industrial operations indicate that the following failures could occur on an unscheduled basis.

6.7.2 REFRACTORY FAILURE

The most time-consuming plant component failure which could cause considerable unplanned down time of the incinerator is the failure of a major refractory area. This type of failure is more time-consuming than any other because repairs can be made only through entry into the hot areas of the system. Therefore, substantial time is required for cool down. In certain sections of the units, at least 48 hours cooling would be required; coupled with a repair which could take as much as six hours. In the most extreme case, this would be followed by a drying period and recurring which could require up to 48 hours. This could result in a total down time of up to five days. This type of failure is extremely rare, however, and periodic inspections normally uncover impending failure and allow minor repairs to be made prior to a major refractory failure. Consumat Systems has had extensive experience with the refractory used and it is extremely rare for a refractory failure to occur without some prior knowledge of an impending repair requirement.

The area in which an unexpected failure is most likely to occur is in the region where materials handling imposes the most severe **mechanical** abuse.

6.7 CORRECTIVE MAINTENANCE PROGRAM

6.7.3 HYDRAULIC FAILURES

Failures in the hydraulic system periodically occur. Failures which tend to interrupt the operation are usually those associated with ruptured lines or complete seal failures. Since these parts are outside the high temperature environment and are repairable while the machine is still at operating temperature, such failure would not be expected to put the system, or a given module, out of operation any longer than five hours. The system can remain at operating temperature without loading for up to six hours. If the repair time runs longer than this, it will be necessary to run the incinerator through its shutdown procedure. In multi-unit installations, each incinerator module is provided with its own separate hydraulic system which prevents the failures of a single system from affecting the operation of any of the other systems. Spare hydraulic pumps and motors for the hydraulic systems can be maintained in the spare parts inventory and should require no more than three hours replacement time.

Generally, if a cylinder begins to lose its seal, a repair can be planned for replacement prior to the time when the hydraulic leakage becomes excessive. All hydraulic components are readily accessible for inspection.

6.7.4 WET ASH CONVEYOR JAM

The most common occurrence resulting in failure of a wet ash conveyor has been in the area of unexpected jams. Consumat Systems' drag belt conveyor is designed with special non-jamming cleats which minimize failures of this sort. However, on certain occasions, odd shaped objects or excessive wire can become entangled in the conveyor and cause the drag chain to stall. Under this circumstance, it might be necessary to drain the water from the conveyor tank and remove the obstruction when the unit is off-line. Appropriate safety precautions, such as "lock-out/tag-out" procedures should be implemented.

6.7 CORRECTIVE MAINTENANCE PROGRAM

6.7.5 ELECTRIC MOTORS

The most prevalent unexpected failure is the failure of an electric motor. Generally, the switching of a motor on a system on a single module requires no more than four hours. The critical motors are the blower motor for combustion air supply and the motor for the hydraulic drive system. The failure of an electric motor is not of major consequence to the system operation and motor exchanges are rapidly made so long as the replacement motor is readily available.

6.7.6 THERMOCOUPLES

The control thermocouples in the Consumat Systems equipment occasionally fail on an unexpected basis resulting in erratic air supply and occasional excessive fuel usage. However, this can be readily detected by the operator, and thermocouple exchanges can be made in less than 30 minutes. Spare thermocouples should always be maintained within the spare parts inventory.

6.7.7 PROGRAMMABLE LOGIC CONTROLLERS

Consumat Systems uses PLC solid state logic to control functions of the system. Replacement of the controller module as well as the input/output modules is relatively simple. Spare modules should be maintained in inventory. The latest program logic should be kept on file at the facility and a backup copy should be forwarded to Consumat System, Inc.

6.7.8 LIMIT SWITCHES

Consumat Systems uses numerous limit switches to sequence events throughout the equipment. These limit switches occasionally fail unexpectedly. However, repair can be made in less than one hour. Spares should always be retained in the spare parts inventory.

6.7 CORRECTIVE MAINTENANCE PROGRAM

6.7.9 CRITICAL MALFUNCTIONS

There are several critical components within the waste processing equipment, the loss of which may cause immediate shutdown, substantial damage, or create imminent danger if not correctly handled by the plant operation personnel on duty. These systems malfunctions may be divided into two categories: (l) Level I emergencies, which are the most imminently threatening; and (2) Level II emergencies, which could cause a loss of production but would not lead immediately to serious damage. The operator should be thoroughly familiar with both levels of malfunction and the specific corrective actions to be taken in the event of the occurrence of any of the described malfunctions. The operator should also become thoroughly familiar with the potential causes of both levels of malfunctions and become vigilant in his routine inspections to identify and correct these potential causes of problems (see OP-7 TROUBLESHOOTING).

Level I malfunctions can cause **serious irreversible damage** to certain parts of the facility, should the condition not be corrected within a certain period of time. These malfunctions should take precedence over all other operations at the plant with the exception of personal safety, which should be regarded as the highest priority at all times. Level I system malfunctions include:

- Cooling system failure.
- Loader carriage stopped in fire.
- Transfer ram stopped in fire.

Level II system malfunctions may potentially interrupt the combustion and materials handling processes if not corrected, but have a lower potential for causing irreversible equipment damage. These malfunctions should be corrected by the operator or maintenance personnel, as soon as feasible, utilizing the proper corrective steps. Examples of Level II malfunctions include:

- Jamming or stoppage of the ash conveyor.
- Loss of the cooling water loop pump (so long as backup pump is available).

6.5.10 LEVEL I MALFUNCTION CONTROL

A. **Internal Cooling Loop Failure** (Malfunction Alarm Sounding)

1. IMMEDIATELY make sure fresh water by-pass system is operational upon indication of failure of cooling water recirculation pumps.

2. Determine if electric power is available to the cooling water pumps and controls.

3. Check cooling water pump starter overload protection. Reset motor starter contacts.

4. Check for rupture of cooling water circulation lines or hoses.

   [a] If caused by a loose fitting which can be secured, do so immediately.

   [b] If water loss is substantial and cannot be stopped, set lower chamber overtemperature setpoints to 0. Stop charging the incinerator. Commence emergency incinerator shutdown procedures. **Observe personal safety rules at all times.**

5. Loss of Cooling Water Recirculation Pumps Only

   Assure that by-pass emergency cooling water is available by checking the appropriate valves for OPEN. Observe by-pass drain line for water flow. Locate source of problem and correct.

The entire loss of cooling to the underfire air tubes, transfer ram faces, and ash sump can cause substantial damage to the equipment in a very short period of time. **Complete loss of cooling circulation is grounds for putting out the fire in the lower chamber IMMEDIATELY.**

6.5.10 LEVEL I MALFUNCTION CONTROL

B. Loader Carriage Stopped In Fire

It is not an extremely unusual condition for the loader carriage to be jammed beyond the fire door. Many odd shaped objects have the capability of preventing full sequence of operation of the loader carriage which in turn, trips the malfunction indication. Manual override controls are provided on the face of the Motor Starter Panel Box in order to clear normal loader jams. Procedures are given elsewhere for this condition. However, should the loader carriage not be removed from the combustion chamber within two to five minutes, then potential damage could be caused in the form of warpage or other structural degradation of the carriage. If the loader carriage cannot be removed from the fire using the manual controls, the following steps should be taken:

1. A water hose should be used to provide cooling water on the rear exterior surfaces of the loader carriage (**CARE FOR PERSONAL SAFETY SHOULD ALWAYS BE TAKEN WHEN HANDLING HOT STEEL COMPONENTS).** Sufficient water sprayed onto the face of the loader ram will provide temporary protection against structural damage. Ample water should be used in order to effect the cooling.

2. Meanwhile, a chain fall or come-along can be obtained and attached to the backside of the loader carriage. The loader carriage can thus be manually pulled beyond the fire door so that the fire door can be lowered. As much water as is possible and practical should be applied to the rear of the loader carriage during this procedure. Water vapor from the cooling operation will be a certain hindrance and personal safety should be the prime consideration during this operation.

3. Once the fire door is down, determine the cause of the operator's inability to manually retract the ram and correct.

4. If the ram cannot be manually retracted within five minutes, the fire in the combustion chamber should be extinguished by:

   [a] reducing the primary combustion chamber overtemperature setpoint to 0;

   [b] using water in the primary combustion chamber through the cleanout end, taking care to avoid getting excessive water on bare refractory **(EXTREME CARE FOR PERSONAL SAFETY SHOULD ALWAYS BE OBSERVED DURING THIS PROCEDURE).**

6.5.10 LEVEL I MALFUNCTION CONTROL

C. Transfer or Ash Ram Stopped In Fire

All permanent metal internal parts in the primary combustion chamber are provided with circulating water cooling. Therefore, temporary exposure to combustion chamber conditions can be tolerated in normal operations. The top portion of the rams are not, however, water cooled since they reside, for the most part, under and outside the combustion chamber. If the transfer or ash ram jams in the extended position in the hot combustion chamber, warpage and potential damage can occur. An alarm will be sounded if a ram is out of sequence and an immediate inspection should be made to determine which ram is out of sequence. Manual controls are provided on the incinerator main control panel in order to clear temporarily jammed conditions.

Should these controls not effect the removal of the transfer ram or ash ejector ram from the combustion chamber, the following procedure should be followed:

1. Determine which ram is in the combustion chamber by a visual inspection under the combustion chambers **(CARE SHOULD BE TAKEN TO OBSERVE PERSONAL SAFETY PROCEDURES DURING THE INSPECTION).**

2. If possible, determine the cause of the jam; such as hydraulic line broken, hydraulic ram seal blown, ram carriage crooked, etc.

3. If the ram cannot be removed from the fire utilizing manual override controls, a water hose should be used to provide exterior cooling water to the underside surfaces of the ram from below the machine **(EXTREME CARE FOR PERSONAL SAFETY SHOULD BE OBSERVED DURING THIS PROCEDURE).**

4. A chain fall or come-along should be attached to the underside of the carriage at a convenient location and the ram pulled back to its retracted position utilizing the mechanical apparatus.

5. Determine the cause of the jam and correct as necessary.

Should the above procedures take in excess of fifteen minutes, including the addition of the exterior cooling water, then the primary combustion chamber should be cooled by reducing the lower chamber overtemperature setpoint to 0 and, if necessary, utilizing water in the primary combustion chamber taking care not to release water on bare refractory **(APPROPRIATE PERSONAL SAFETY MEASURES SHOULD BE TAKEN DURING THIS PROCEDURE).**

6.6 MAINTENANCE SAFETY

During maintenance of the equipment, it is highly important to be aware of special hazards. Two safety programs are outlined in the following sections: Zero Mechanical State, and Lockout Procedures. Failure to follow proper safety procedures during maintenance could result in injury or death. The responsibility for implementation of a comprehensive safety program rests with the operating staff. The safety procedures in this manual should be considered a starting point for the facility's safety program.

ACCIDENTS CAN BE PREVENTED.
A CAREFUL WORKER IS THE BEST SAFETY DEVICE.

6.6.1 ZERO MECHANICAL STATE

Zero Mechanical State (ZMS) exists when the possibility of an unexpected mechanical movement has been eliminated. During incinerator maintenance, it is absolutely mandatory to totally de-activate the equipment so there is no possibility of an unexpected machine movement. Power lock-out, described in the next section, is commonly used for this purpose. Most machines are powered by electrical, hydraulic or pneumatic drives. Energy may be stored in a shutdown machine in various ways -- air under pressure in a cylinder, hydraulic pressure fluid stored in pressurized hose, or machine members whose weight can generate fluid pressure. Therefore, **electrical de-energizing may not be enough** to neutralize all power sources.

ZMS is a procedural checklist similar to the one used by a pilot before takeoff. Certain maintenance procedures at the facility should require a ZMS condition as a matter of course.
Make sure of the following:

1. Every electrical power source to the machine has been de-energized.
2. The mechanical potential energy of the entire machine is at its lowest practical value so that opening of pipe, tubing, hose or actuation of any valve will not produce an unexpected movement that could cause injury.
3. Pressurized fluid (air, oil, or other) trapped in the machine lines, cylinders or other components cannot produce a machine motion when a valve is actuated.
4. The kinetic energy of all machine parts is at its lowest practical value.
5. Loose or freely movable parts are secured against accidental movement.

6.6 MAINTENANCE SAFETY
6.6.2 LOCKOUT PROGRAM

Unexpected operation of electrical equipment started by automatic or manual remote control may cause injuries to persons who happen to be nearby. For this reason, when repair work is to be done on motors or other electrical equipment, the circuit should be opened at the switch box and the switch padlocked in the OFF position. Tag the switch with a description of the work being done and the name of the person and the department involved. Warning signs or tagging alone do not provide the same protection as locking out equipment.

Because of the grave risk to life, lockout procedures should be mandatory and strictly enforced. The supervisor should see that the program is implemented with the necessary keys, locks, and arrangements. Each key should fit only one lock.

For identification, locks may be painted various colors to indicate types of craft and different shifts. Each lock should be stamped or have a metal tag with the employee's name or clock number. Only one key should be issued per person for his or her locks.

The supervisor should have a master key and list of key numbers, and should keep an extra key to each lock in his department. Under no circumstances should the supervisor lend the master key out.

No matter what method of electric switch lock-off is used, effective control can be maintained only by constant supervision and by training personnel in the safe routine. Following is a standard lock-out procedure.

1. Alert the operator.

2. Before starting work on an engine or motor, line shaft or other power transmission equipment, or power-driven machine, make sure it cannot be set in motion without your permission.

3. Place your own padlock on the control switch, lever, or valve, even if someone has locked the control before you. You will not be protected unless you put your own padlock on it. (The other maintenance person could remove his lock and someone could start the equipment.)

4. When finished working at the end of your shift, remove your own padlock. Never permit someone else to remove it for you. Be sure you are not exposing another person to danger by removing your padlock.

5. If you lose the key to your padlock, report the loss immediately and get a new padlock.

6.7 SPARE PARTS

Individual components used in the manufacture of Consumat® equipment are procured from recognized, reliable manufacturers. The components have been selected for use by Consumat Systems, Inc., based on the knowledge gained through many years of operating experience. Most components carry a one year warranty from the original manufacturer.

This listing represents the recommended parts and components necessary to provide a reasonable level of backup for the first two year operating period. This list is not intended to represent the cost of replacement parts necessary in the first two years, but rather provides an "off the shelf" availability of parts to reduce downtime in the event of individual component failure. The manufacturer's warranty would provide replacement parts if appropriate, but delivery lead times on some components could cause unnecessary, extended shut-down of the equipment. Some of the components may be readily available from local distributors and would not require stocking at the facility. This list assumes that parts are not readily available from local suppliers.

As is the case with any capital equipment operation, preventative maintenance programs can reduce the frequency of repairs and unscheduled downtime.

SPARE PARTS ORDERING PROCEDURE

1. Check applicable drawings to find part number. Usually this number is also on the part.
2. Identify part using name and number.
3. Check your spare parts inventory - you may want to order frequently used parts at this time.
4. Call your dealer. Identify your unit by serial-number (P-5185). Your P-number is shown on the drawing list, and on the title page of this manual.
5. Hydraulic cylinders: Parts for hydraulic cylinders (seal kits, replacements) may be ordered using the Consumat Model Number listed in specifications and your P-number.
6. REPLACE damaged, missing or illegible black and yellow CAUTION (Safety) DECALS IMMEDIATELY. Replacement decals are available through your CONSUMAT® dealer.

Spare/replacement parts are available through your dealer.

AIR POLLUTION CONTROL PRODUCTS, INC.
P.O. BOX 6113
ASHLAND, VA 23005
PHONE: (804) 550-2842
FAX: (804) 550-2849

6.7.1 RECOMMENDED SPARE PARTS P-5185

Level I Spare Parts (Frequently used and/or inexpensive parts which will cover the majority of spare parts needs.)

QUANTITY	DESCRIPTION	UNIT PRICE
4	A/B #800T-A1A Pushbutton Switch	
4	A/B #800T-H2A Pushbutton Switch	
4	A/B #800T-PB16R Lighted Pushbutton Switch	
4	A/B #800T-XA Contact Block	
1	A/B #800T-J2A Selector Switch	
1	A/B #1492GHA100 10 amp Circuit Breaker	
1	A/B #1492GHA50 5 amp Circuit Breaker	
1	Consumat® Water Cooled Nozzle Assembly	
4	Dialco #103-3101-05-103 Socket	
4	Dialco #103-1332-403 Green Lens	
4	Dialco #103-1331-403 Red Lens	
4	Dialaco #103-1333-403 Amber Lens	
2	Dixon 2" Hose Stem	
2	Dixon 2" Hose Clamp	
6	Fuses FRS-150	
6	Fuses FRS-35	
6	Fuses FRS-20	
6	Fuses FRN-60	
6	Fuses FRS-2.5	
6	Fuses FRS-1.25	
4	Fuses FRS-10	
4	Fuses FRS-12	
4	Fuses FRS-7	
2	Fuses FRS-15	
6	Fuses FRS-4	

6.7.1 RECOMMENDED SPARE PARTS P-5185

Level I Spare Parts (Frequently used and/or inexpensive parts which will cover the majority of spare parts needs.)

QUANTITY	DESCRIPTION	UNIT PRICE
6	Fuses FRS-3.5	
1	Fuses FRN-5	
2	Fuses FRN-10	
6	Fuses FRS-4.5	
6	Fuses FRS-6	
1	2" Diameter Steam Hose (25' length)	
4	Honeywell #9J50AA12-2 Thermocouple Element	
4	Honeywell #9J50AA18-2 Thermocouple Element	
2	Honeywell #5A10M-12-1-III-B2 Thermocouple	
2	Honeywell #5A15R18 Thermocouple	
2	Honeywell #2J6M14-E-12-1 Thermocouple	
2	Honeywell #C7035A1031 UV Sensor	
4	Idec #RR3BU-120AC Relay	
2	Micro #LSZ51B Roller Arm	
2	Micro #LSZ52D Roller Arm	
2	Micro #LSA7L Limit Switch	
2	P&B #PRD7AY0-120AC Contactor	
1	Plibrico Super Air Bond Plastic Refractory (100 lb. box)	
1	Quintolubric Hydraulic Fluid #822-220 (5 gallon container)	
4	Spraying Systems 3/8 BDSS5 Water Spray Nozzle	
1	SSAC #TDM12OAL Timer	
6	Sylvania #6S6-120V Bulb	

6.7.1 RECOMMENDED SPARE PARTS P-5185

Level II Spare Parts (Parts which are more expensive and less frequently used than Level I parts. Stocking of these parts will help keep downtime to a minimum.)

QUANTITY	DESCRIPTION	UNIT PRICE
1	Action #T723-0000 Transmitter	
1	Asco #8210B35 Solenoid Valve	
1	Asco #8210B27 Solenoid Valve	
1	Asco #8210C93 Solenoid Valve	
1	Asco #8210C94 Solenoid Valve	
1	Asco #8215B70 Solenoid Valve	
1	Asco #8215C63 Solenoid Valve	
1	Asco #8215A90 Solenoid Valve	
1	Asco #SB11A Switch	
1	Asco #QL1OA1 Temperature Transducer	
1	Asco #TE10A21 Pressure Switch	
1	Asco #8342C1MS Solenoid Valve	
1	Asco #8210G6 Solenoid Valve	
1	Asco #8262132 Solenoid Valve	
1	Asco #8210C34 Solenoid Valve	
1	Asco #8262G2 Solenoid Valve	
1	Asco #8210C35 Solenoid Valve	
1	Asco #8210G94 Solenoid Valve	
1	Asco #8266D11V Solenoid Valve	
1	Asco #8266D57V Solenoid Valve	
1	Barksdale #C9612-3 Pressure Switch	
1	Bell & Gossett #12, 8-25 lb Pressure Reducing Valve	
1	Bell & Gossett #1170-50 Pressure Relief Valve	
1	Bell & Gossett #1170-36 Pressure Relief Valve	
1	Bell & Gossett #7 Automatic Air Vent	

6.7.1 RECOMMENDED SPARE PARTS P-5185

Level II Spare Parts (Parts which are more expensive and less frequently used than Level I parts. Stocking of these parts will help keep downtime to a minimum.)

QUANTITY	DESCRIPTION	UNIT PRICE
1	Consumat UT-14 Temperature Controller	
1	Consumat Scrubber Quench Spray Nozzle Assembly	
2	Consumat Water Cooled Underfire Air Pipe	
1	Consolidated 1543 1/2" Safety Valve	
1	Crouzet 88226513 Timer	
1	Cutler Hammer #A10DN0A Motor Starter	
1	Cutler Hammer #A10GN0A Motor Starter	
1	Cutler Hammer #A10CN0A Motor Starter	
1	Cutler Hammer #C10BN5A Contactor	
1	Cutler Hammer #CN15NN3A Contactor	
1	Cutler Hammer #H1117 O.L. Heater	
1	Cutler Hammer #H1044 O.L. Heater	
1	Cutler Hammer #H1021 O.L. Heater	
1	Cutler Hammer #H1029 O.L. Heater	
1	Deltrol (Pneutrol) #F-20BK Flow Control Valve	
1	Federal Signal Horn #350-120 VAC	
1	General Electric #9T58B55 Transformer	
1	General Electric #9T22B4312 Transformer	
1 ea.	Gems #FS-550-29609 Flow Switch	
1 ea.	Gems #FS-550-30641 Flow Switch	

6.7.1 RECOMMENDED SPARE PARTS P-5185

Level II Spare Parts (Parts which are more expensive and less frequently used than Level I parts. Stocking of these parts will help keep downtime to a minimum.)

QUANTITY	DESCRIPTION	UNIT PRICE
1	Gould Modicon #AS-B-817-116 115 VAC Input Module	
1	Gould Modicon #AK-B-805-016 115 VAC Input Module	
1	Gould Modicon #AS-B-814-108 115 VAC Output Module	
1	Gould Modicon #AK-B-804-016 115 VAC Output Module	
1	Gould Modicon #M680-108 Memory	
1	Gould Modicon #E908-131 Exec. Cart.	
1	Gould Modicon #W955L-015 Cable	
1	Gould Modicon #W954L-012 Cable	
1	Gould Modicon #804-002 Cable	
1	Gould Modicon #801-002 Cable	
1	Gould Modicon #808-002 Cable	
1	Gould Modicon #P840 Power Supply	
1	Gould Modicon #984-685E Controller	
1	Honeywell #RA890G1260 Gas Burner Relay	
1	Honeywell #M6284A1022 Modutrol Motor	
1	Honeywell #M7284A1004Modutrol Motor	
1	Honeywell #118702B Reset Cover	
1	Honeywell #V5055A1053 Gas Blocking Valve	
1	Honeywell #V4055A1098 Actuator	
1	Honeywell #C437E1004 Low Pressure Switch	
1	Honeywell #Q270A1024 Mounting Base	
1	Honeywell #Q607A1068 Auxiliary Switch	

6.7.1 RECOMMENDED SPARE PARTS P-5185

Level II Spare Parts (Parts which are more expensive and less frequently used than Level I parts. Stocking of these parts will help keep downtime to a minimum.)

QUANTITY	DESCRIPTION	UNIT PRICE
1	Honeywell #C437D1005 High Pressure Switch	
1	Honeywell #C645C1020 Air Proving Switch	
1	Honeywell #Q624A1014 Spark Generator	
1	Lambda #LFS-43-24 Power Supply	
1	Maxitrol #325-3 Gas Regulator	
1	Quartech #8550 Power Supply	
1	Quartech #DM8330 Datamate	
1	Quintolubric #822-220 Synthetic Hydraulic Fluid (55 gal container)	
1	RCM 1"-71-R-15-WX Flow Meter	
1	RCM 2"-71-2-60 Flow Meter	
1	Rustoleum #A29-8801 Gray Paint (5 gallon container)	
2	Square D Pressure Switch #9013-GHG-J30	
1	Rosemont # 0444T J2U1A2E5 Transmitter	
1	Rosemont # 0444T J2D1A2E5 Transmitter	
1	Rosemont # 1151DR2F22M1B1 Transmitter	
1	Rosemont # 1151DP3E22M1B1 Transmitter	
1	Rosemont # 1151DR2E22B4D3 Transmitter	

SECTION 4

INITIAL START-UP
SYSTEM OPERATION AND MAINTENANCE

4.1 Initial Start-Up Check List

4.1.1 Lubrication

The following items must be checked for correct lubrication and oil levels. Refer also to manufacturer's recommendations located in Section 8 of this manual.

A. Heat Exchanger Unit:

1. Cleaning Mechanism Bearings, Linkage, and Drive
2. Screw Conveyor Bearings and Drive
3. Cooling Air Fans

B. Fabric Filter Unit:

1. KUV-24 Conditioning Drum Bearings and Drive
2. Fabric Filter Screw Conveyor Bearings and Drive
3. Dust Discharge Rotary Valve Bearings and Drive
4. Recirculation Screw Conveyor Bearings and Drive
5. Pneumatic Component Lubricators

C. Miscellaneous System Components:

1. Preheat Fan Bearings
2. System Dampers

4.1 Initial Start-Up Check List (Continued)

4.1.2 Mechanical Checks

The following items must be checked for proper connection in accordance with installation instructions. Refer also to manufacturer's recommendations located in Section 8 of this manual.

A. Heat Exchanger Unit

1. Check that all cooling tube mouthpieces, gaskets, and fasteners are securely in place.
2. Cooling Air Fans: Check for proper rotation - rotation should direct air flow from the outside into the heat exchanger.
3. Cleaning Mechanism: Verify that all cleaning mechanism chains are securely fastened and are free to swing between the cooling tubes.
4. Cleaning Mechanism Drive: Verify proper connection and rotation - Clockwise as viewed from the drive side

WARNING: Cooling fans may operate at any time when the selector switches are in "HAND" or "AUTO" whether the system is "ON" or "OFF"

4.1 Initial Start-Up Check List (Continued)

4.1.2 Mechanical Checks (Continued)

B. Dust Conditioning Drum and Tower

1. Verify drum rotation. Drum rotates in direction of air flow.
2. Conditioning Drum Ball Content: Verify that the conditioning drum is approx. 15% filled (300 lb.) with 1 1/2" diameter ceramic balls prior to start-up. This volume will allow the balls to roll freely below the drive shaft as the drum rotates.
3. Verify CCW rotation of recirculation screw as viewed from the drive side. Screw feeds toward tower.

C. Fabric Filter Unit

1. Filter Bags: Inspect bag installation. Make sure that all bags and mouthpieces are locked in position, and are flat against the tube sheet.
2. Filter Cleaning System: Inspect the compressed air cleaning pilot valves for physical damage. Verify tubing and pipe connections to the compressed air tanks, pilot valves, and diaphragm valves.
3. Differential Pressure Transmitter: Verify that all tubing connections are tight. Check transmitter calibration against a U-tube manometer, making any necessary adjustments.
4. Check filter door gaskets. Ensure properly installed.

D. Lime Storage and Feed Unit (NOT SUPPLIED BY INTEREL)

E. Preheat System

1. Verify fan rotation
2. Check all flanged duct connections for proper seal.
3. Verify proper installation and operation of dampers and control valves.
4. Check for proper operation and installation of electric heater.

F. General

1. Verify the proper installation and connection of all components. Particular attention should be paid to proper sealing of flanged connections and field insulation.
2. Adjust all pneumatic pressure regulators to their recommended set points.
3. Verify proper installation and operation of all dampers and control valves.
4. Verify proper rotation of all rotating drive components as noted below (rotation as viewed from drive end):
   a. Heat Exchanger Cleaning Mechanism Drive - CW
   b. Heat Exchanger Cooling Fans - Noted on motor
   c. Heat Exchanger Screw Conveyor - CCW
   d. Conditioning Drum - CW (in direction of gas flow)
   e. Fabric Filter Screw Conveyor -CCW
   f. Recirculation Screw Conveyor - CCW
   g. Discharge Rotary Feeder - (indicated on unit)
   h. Preheat Fan - CCW (indicated on unit)

4.1.3 Controls

Verification of electrical controls and connections are made. Review Section 5, Electrical Controls", to become familiar with the various operational modes and functions before proceeding. Verify that the heat exchanger temperature set points are properly configured and any gauges are zeroed. Confirm all thermocouples and electrical equipment are mounted properly in their correct locations. Verify baghouse cleaning set points and any gauges are zeroed. Verify heater and thermostat set points and operation.

WARNING: Cooling fans may operate at any time when the selector switches are in "HAND" or "AUTO" whether the system is "ON" or "OFF"

4.1.4 Fabric Filter Precoat

In order to improve the fabric filter's performance and extend its life expectancy, a coating of inert precoat material is applied to the filter bags followed by a coating of reagent material (hydrated lime). This coating procedure should be followed for all new filter fabric installations. A properly formed filter cake will improve particulate capture and dust release characteristics during filter cleaning. The addition of reagent material to the base filter cake increases filter fabric protection against attack from acid gasses which may escape neutralization during the dry scrubbing process.

The precoat material should be introduced into the system through the dry reactor access door. Two bags of precoat material are used per fabric filter compartment. The I. D. fan should be operating to provide the draft necessary for distribution of the material onto the filter fabric surfaces. Reagent material should be injected into the system for approximately 30 minutes at the recommended feed rate to complete the pre-coating procedure.

4.2 System Operation

The dry scrubber system, while configured to be inherently reliable, is sensitive to a variety of operating conditions. A review of the following general principles will aid in understanding proper system operation and maintenance. The most critical period of operation is during system start-up.

4.2.1 Temperature

High temperature will cause rapid damage to the fabric filters as well as other system components. The system is designed to operate at 300° F. for maximum efficiency. Low temperatures can also damage the filter fabric. Damage occurs if the process gas temperatures are not maintained well above the dew point, allowing moisture condensation. Dew point temperature can vary drastically as a result of flue gas moisture content. To minimize the risk of moisture condensation within the fabric filter, gasses should not be drawn through the fabric filter when process gas temperatures are below 220° F..

4.2.2 Moisture

Moisture condensation occurs when the process gas temperature falls below the dew point. Condensation will result in blinding of the filter fabric material, causing high pressure differential across the filters, reduced air flow, and severe maintenance problems.

4.2.3 Acid Condensation

Acid condensation is formed along with moisture condensation. It can be controlled by the consistent feed of neutralizing reagent to process gas stream. Operation of the system without proper reagent feed will result in high differential pressure across the filter bags and severe corrosion of the equipment. Before system start-up, the lime storage hopper must be filled with the appropriate material and the reagent feed system must be operating properly.

4.2.4 Start-up and Shutdown

A. Start-up

This sequence is for initial start-up of the furnace and Air Quality Control System (AQCS) or after the AQCS has through a shutdown procedure.

1. Initiate AQCS preheat system sequence.
   - Close AQCS inlet isolation damper.
   - Close AQCS outlet isolation damper.
   - Close preheat inlet isolation damper.
   - Close preheat outlet isolation damper.
   - Start preheat fan.
   - Open preheat isolation dampers.
   - Start electric heater.
   - All electric hopper and conveyor heaters to be on.

2. Continue running preheat until heat exchanger outlet temperature is greater than 220°F.

   - Initiate a 30 minute time delay before going on line.
   - Allow incinerator to reach sufficient temperature to maintain the heat exchanger outlet temperature set point.
   - DO NOT FEED WASTE

3. Start Id fan with fan isolation damper closed.

4. Initiate preheat shutdown.

   - Turn electric heater off
   - Close preheat isolation dampers.
   - Turn preheat fan off.
   - Open AQCS isolation dampers.

5. Modulate ID fan damper to maintain furnace draft.

   - DO NOT FEED WASTE

6. Initiate reagent feed systems. Permissive necessary.

   - ID fan running.
   - Incinerator at operating temperature.
   - Heat exchanger outlet temperature at operating temperature.

7. Time out a delay before feeding waste after confirmation of reagent addition. (Not less than 30 min.)

8. Permissive to feed waste.

D. Shutdown (Normal Stop)

This sequence is used any time the AQCS will be "off-line". It is extremely important to do a proper shutdown to avoid condensation and caking problems in the AQCS.

The following is a summary of the steps taken during a shutdown, refer to Section 5, Electrical Controls for specific operations and timing.

1. Incinerator dump stack to open prior to starting the AQCS shutdown.
2. Lime feed system will be disabled.
3. Heat exchanger (HEX) cleaning mechanism will operate continuously.
4. HEX screw conveyor will operate continuously.
5. Baghouse will be in a continuous cleaning cycle to do a complete bag cleaning.
6. Recirculation, baghouse and discharge screw conveyors will cycle on-off to evacuate all possible dust from the AQCS.
7. ID fan will shutdown and the AQCS be "Off-Line".
8. All screw conveyor and hoppers heaters will continue to operate on their thermostat and temperature switches.
9. Preheat system will be enabled.

WARNING: Cooling fans may operate at any time when the selector switches are in "HAND" or "AUTO" whether the system is "ON" or "OFF"

4.3 Maintenance

The following schedule of preventative maintenance will ensure the longest life and most trouble free operation of the AQCS system. The following items should be checked at the intervals specified. Repairs should be made immediately whenever a problem is detected. Continued operation of the system with a damaged or inoperative component can cause severe damage to other parts of the system as well as potentially dangerous emissions.

4.3.1 Heat Exchanger

Daily Inspections:

1. Check discharge temperature to ensure system is operating at set point. This check is meaningful only when the heat exchanger is loaded, i.e., when cooling fans are operating.
2. Verify heat exchanger screw conveyor and cleaning mechanism are operating correctly.

Weekly Inspections:

1. Check cleaning mechanism and heat exchanger screw conveyor drives for correct oil levels and bearing lubrication. Caution: DO NOT OVER LUBRICATE!.
2. Inspect interior of hopper and dust hood for dust bridging and cleaning mechanism operation. Remove any excessive dust buildup as required and verify chains are hanging straight.
3. Inspect the housing for air leakage. The heat exchanger is under negative pressure and there is a characteristic hissing sound at air leaks. Repair as required.

4.3 Maintenance continued

Monthly Inspections:

1. Inspect the heat exchanger tubes for wear and leakage. Actual lifetime of a cooling depends primarily on the abrasiveness of the dust and corrosion causing elements within the gases. MAINTAIN PROPER TEMPERATURE!
2. Inspect cleaning mechanism linkage and drive assembly for correct operation.
3. Check all structural fasteners for loosening. Tighten as necessary.
4. Inspect front door gaskets for damage or deterioration and lubricate hinge assemblies.

4.3.2 Dry Reactor Tower and Conditioning Drum

During periods of shutdown, the dry reactor tower access door should be opened for inspection of the tower and conditioning drum. Inspect the tower and drum for material build-up and plugging of the conditioning drum. Failure to maintain these areas open will result in an increasingly high pressure differential through the reactor tower, resulting in loss of air flow through the system. If plugging of the drum occurs, it can be corrected by mechanical cleaning out of the drum perforations. Access is gained through access covers on each side of the conditioning drum housing. A bottom access cover is provided for removal of dislodged materials. Severe plugging of the drum may require flushing with water to dissolve caked solids.

The bearings and drive components should be inspected monthly. Check for proper alignment, physical wear, and proper lubrication.

4.3 Maintenance continued

4.3.3 Fabric Filter Unit

The following inspections of the fabric filter should be made on a regular basis in order to ensure long term trouble-free operation of the system. It is recommended that these inspections be recorded in a log book in order to detect long term performance trends and to verify that inspections are make in a timely manner. Any abnormal condition should be investigated and corrected immediately upon discovery. Note: The dust collection efficiency of the fabric filter is functionally related to the presence of dust on the filter bags. Filtration efficiency is greater when the bags are holding some dust. The filter unit should operate with a pressure differential across the filter bags of between 4" and 6" WC.

Daily Inspections:

1. Check the pressure differential across the filter bags
2. Check the filter cleaning system for proper operation
3. Check all fans, motors, and bearings for excessive noise or vibration

Weekly Inspections:

1. Inspect the filter elements for leakage
2. Check all housings and connections for abnormal air leakage
3. Check for bridging of ash in the filter hopper
4. Inspect rotary discharge valve for leakage
5. Open dust hood access doors and inspect for bridging between filter bags

4.3 Maintenance continued

Monthly Inspections:

1. Check all structural fasteners for loosening. Tighten as necessary.
2. Check all bearings for proper lubrication, including screw conveyor hanger bearings. CAUTION: Do Not Over Lubricate!
3. Check oil levels in all gear boxes.
   (Change oils as stated in manufacturer's manuals)
4. Inspect front door gaskets for damage or deterioration
5. Inspect filter cleaning compressed air piping, regulator, and moisture trap for leaks and/or damage.

4.3.4 Maintenance and Repair of Fabric Filters

The fabric filters are subject to damage from a variety of sources, including abrasion and excess heat. If a filter bag develops a hole, the efficiency of the entire filter unit is lowered. The damaged filter bag must be either repaired or replaced. Due to the health risks presented by contaminants present within the filter fabric, replacement of damaged filter bags is recommended. The following procedure should be followed if repair of the filter bag is attempted.

Filter bag repair procedure:

1. Remove the damaged filter bag from the filter housing.
2. Remove as much of the accumulated dust as possible from the filter bag by shaking.
3. Locate the damaged portion of the filter bag and thoroughly clean the surrounding area to remove as much dust from the fabric as possible.

4.3.4 Maintenance and Repair of Fabric Filters continued:

4. If the damaged area is 1/2 inch in diameter or smaller: Apply RTV silicone sealant directly to the damaged area, working the sealant into the cloth fibers. Allow sealant to cure completely before re-installing filter.
5. If the damaged area is larger than 1/2 inch in diameter: Cut a patch of filter fabric which will cover the hole with an overlap around the edges of at least 2 1/2 inches. (one extra filter bag will provide several patches when cut) Place a continuous bead of RTV silicone sealant around the perimeter of the patch. Press the patch firmly onto the filter. Allow the sealant to cure thoroughly before re-installing filter. Note: Extreme care must be used in applying the adhesive evenly and continuously to insure that no air will leak through the seal.

4.3.5 Dry Additive Injection System **(NOT SUPPLIED BY INTEREL)**

An even feed of lime and carbon at the rate specified in "Engineering Set Points" is critical for efficient gas scrubbing and the prevention of possible acid condensation within the system. Any reduction in the reagent feed rate can be made only after thorough testing of the gas stream constitutes. (Refer to the lime system supplier operation and maintenance manual.)

4.3.6 Preheat System

Proper operation and maintenance of the preheat system is critical to the prevention of condesation within the system during periods of shut-down. Failure to properly maintain the system at the recommended set points will result in corrosion within the system and plugging of the filter bags. The following inspections should be made to insure proper preheat system operation. Refer also to manufacturers recommendations located in Section 8 of this manual.

1. Check preheat fan for excessive noise and/or vibration daily.
2. Check weekly that the heater and controls function properly.

4.4 Lubrication Schedule

Lubrication Point	Lubrication Required	Frequency of Lubrication
Fabric Filter:		
Conditioning Drum Bearings	Lubricate with no. 2 consistency Lithium based grease	12 Weeks
Drive	Maintain oil level with 210 Kin viscosity oil - Mobilgear 630 or equivalent	Check and maintain level monthly - replace at 10,000 operating hours or 2 years
Screw Conveyors Bearings	Lubricate with No. 2 consistency Lithium based grease	12 Weeks
Drive	Maintain oil level with 210 Kin viscosity oil - Mobilgear 630 or equivalent	Check and maintain level monthly - replace at 10,000 operating hours or 2 years
Heat Exchanger:		
Cleaning Mechanism Bearings	Lubricate with No. 2 consistency Lithium based grease	12 Weeks
Drive	Maintain oil level with 210 Kin viscosity oil - Mobilgear 630 or equivalent	Check and maintain level monthly - replace at 10,000 operating hours or 2 years
Cooling Air Fans	Direct Drive-none required	No maintenance lubrication required
Screw Conveyor Bearings	Lubricate with No. 2 consistency Lithium based grease	12 Weeks
Drive	Maintain oil level with 210 Kin viscosity oil - Mobilgear 630 or equivalent	Check and maintain level monthly - replace at 10,000 operating hours or 2 years

4.4 Lubrication Schedule (continued)

Lubrication Point	Lubrication Required	Frequency of Lubrication
Preheat Fan:		
Fan Bearings	Lubricate with Lithium based grease conforming to NLGI grade 2 consistency	4-6 Months
Outlet Damper Bearings	Lubricate with Lithium based grease conforming to NLGI grade 2 consistency	6 Months
Miscellaneous:		
Compressed Air Lubricators	Maintain level in bowl using SAE 10 or lighter mineral based oil	Weekly or as required

4.5 Trouble Shooting Guide

FABRIC FILTER

TROUBLE SHOOTING GUIDE

The following table lists system malfunctions and describes the most common causes along with the appropriate remedy for each. Should a system malfunction occur, this list should be consulted prior to calling the factory or the factory's representative for assistance.

PROBLEM	POSSIBLE CAUSE	REMEDY
Low air flow	Obstruction in the ductwork	Check and clean ductwork
	System outlet damper not opening fully	Adjust to open fully
	ID. fan operating at low speed	Adjust V.F.D. for proper speed
	Plugging in the conditioning drum	Check and clean drum
High differential pressure across the fabric filter (in excess of 10" WC)	Cleaning system malfunction	Check cleaning system function. Repair or replace broken or non-functioning parts
	Blinded filter fabric	Clean (launder or steam clean) or replace filters
	Heavy dust build-up on bags	Force cleaning of bags (isolate unit while force cleaning for best results)

FABRIC FILTER

TROUBLESHOOTING GUIDE (Continued)

PROBLEM	POSSIBLE CAUSE	REMEDY
Cleaning cycle operating continuously	Heavy dust build- up on bags	Force cleaning of bags. (isolate unit while force cleaning for best results)
Visible dust emissions from the stack	Torn or leaking filter bag	Repair or replace filter bag
	Filter bags have been over-cleaned	Adjust the cleaning cycle
Blinded filter fabric	Condensation forming in the fabric filter	DO NOT OPERATE the filter below the dew point
		Check proper operation of the preheat system
		Clean (launder or steam clean) or replace filters

HEAT EXCHANGER

TROUBLE SHOOTING GUIDE

The following table lists system malfunctions and describes the most common causes along with the appropriate remedy for each. Should a system malfunction occur, this list should be consulted prior to calling the factory or the factory's representative for assistance.

PROBLEM	POSSIBLE CAUSE	REMEDY
High outlet temperature	Temperature sensor/ indicator malfunction	Check for proper operation and indication. Repair or replace as necessary.
	Cooling fan malfunction	Check set points and inspect fans for proper operation. Repair, reset or replace as necessary.
	Cleaning mechanism malfunction	Check that gear motor is operating. Inspect for broken drive shaft, chain arms, or chains. Repair or replace as necessary.
	Inlet temperature higher than design specs.	Reduce inlet temperature to within design parameters.

HEAT EXCHANGER

TROUBLE SHOOTING GUIDE continued

Low outlet temperature	Temperature sensor/ indicator malfunction	Check for proper operation and indication. Repair or replace as necessary.
	Cooling fan malfunction	Check set points and inspect fans for proper operation. Repair, reset or replace as necessary.
	Cooling tube leak	Inspect cooling tubes, gaskets, mouthpieces for leakage. Repair or replace as necessary.
	Housing leak	Inspect housing and flanges for leakage. Locate and repair as necessary.
	Inlet temperature lower than design specs.	Raise inlet temperature to within design parameters.

State of North Carolina
Department of Environment,
Health and Natural Resources
Raleigh Regional Office

James B. Hunt, Jr., Governor
Jonathan B. Howes, Secretary
Boyce A. Hudson, Regional Manager

Exhibit #22

DEHNR

Air Quality Section
August 17, 1995

Mr. Michael L. Esarey
Manager/Environmental Services
Burroughs Wellcome Company
3030 Cornwallis Road
Research Triangle Park, North Carolina 27709

RECEIVED
AUG 23 1995
ENVIRONMENTAL SERVICES

Dear Mr. Esarey:

SUBJECT: Air Permit No. 4612R9
Burroughs Wellcome Company
Research Triangle Park, North Carolina
Durham County

In accordance with your completed application received June 23, 1995, we are forwarding herewith Permit No. 4612R9 to Burroughs Wellcome Company, Research Triangle Park, North Carolina for the construction and operation of air emission sources or air cleaning devices and appurtenances.

If any parts, requirements, or limitations contained in this Permit are unacceptable to you, you have the right to request a formal adjudicatory hearing within thirty (30) days following receipt of this Permit, identifying the specific issues to be contested. This hearing request must be in the form of a written petition, conforming to the G.S. 150B-23 of the North Carolina General Statutes, and filed with the Office of Administrative Hearings, Post Office Drawer 27447, Raleigh, North Carolina 27611-7447. Unless a request for a hearing is made pursuant to G.S. 150B-23, this Air Permit shall be final and binding.

You may request modification of your Air Permit through informal means pursuant to G.S. 150B-22. This request must be submitted in writing to the Director and must identify the specific provisions or issues for which the modification is sought. Please note that the permit will become final and binding regardless of a request for informal modification unless a request for a healing is also made under G.S. 150B-23.

Unless exempted by a condition of this Permit or the regulations, construction of new air pollution sources or air cleaning devices or modifications to the sources contained in this Perrnit must be covered under a Permit issued by this Division prior to construction. Failure to do so is a violation of General Statute 143-215.108 and may subject the Perrnittee to civil or criminal penalties contained in General Statute 143-215.114.

This Permit shall be effective from October 01, 1995, until September 30, 2000, is nontransferable to future owners and operators, and shall be subject to the conditions and limitations as specified therein.

Should you have any questions concerning this matter, please contact Mr. Prakash Menon, Environmental Engineer, at (919) 571 4700.

Sincerely,

Kenneth Schuster, P.E.
Regional Supervisor
Raleigh Regional Office

Enclosure

cc: Air permits Branch

Ms. Jewel Harper, Chief
Air Enforcements Branch
Air, Pesticides and Toxics Management Division
USEPA Region IV
345 Courtland Street, NE
Atlanta, Georgia 30365

NORTH CAROLINA ENVIRONMENTAL MANAGEMENT COMMISSION

DEPARTMENT OF ENVIRONMENT, HEALTH, AND NATURAL RESOURCES

DIVISION OF ENVIRONMENTAL MANAGEMENT

AIR PERMIT NO. 4612R9

Issue Date: August 17, 1995 Effective Date: October 01, 1995

Expiration Date: September 30, 2000 Replaces Permit: 4612R8

To construct and operate air emission source(s) or air cleaning devices, and for the discharge of the associated air contaminants into the atmosphere. In accordance with the provisions of Article 21B of Chapter 143, General Statutes of North Carolina as amended, and other applicable Laws, Rules and Regulations,

Burroughs Wellcome Company
3030 Cornwallis Road
Research Triangle Park, Durham County, North Carolina

is hereby authorized to construct and operate air emission sources or air cleaning devices and appurtenances consisting of:

1. one natural gas/No. 2 fuel oil-fired multiple chamber medical waste incinerator (800 pounds per hour maximum charge rate, types I, III, IV, and V waste, 1.05 million Btu per hour (minimum) primary burner capacity, 3.35 million Btu per hour (minimum) secondary burner capacity, ID No. 42938),

2. (a) one incinerator system consisting of:

   (i) a hydrated lime injection system and a bagfilter (3,876 square feet of filter area, ID No. MWI-2) installed on

   (ii) one 2,000 pounds per hour capacity, type 0, I, II, III, IV, V, and VI waste, natural gas/No. 2 fuel oil-fired multiple chamber medical waste incinerator [two 1.0 million Btu per hour (minimum) each primary burner, one 4.0 million Btu per hour (minimum) secondary burner and one 6.0 million Btu per hour (minimum) secondary burner, ID No. MWI-2]; and

   (b) a bagfilter (160 square feet of filter area, ID No. BF-1) installed on a hydrated lime storage silo,

NSPS 3. one natural gas/No. 2 fuel oil-fired boiler (33.6 million Btu per hour maximum permitted heat input rate, ID No. N-6) (NSPS, Subpart Dc),

4. seven natural gas/No. 2 fuel oil-fired boilers with the following heat input rates and ID Nos.:

Boiler	ID No.	Heat Input Rate
Main No. 1	42307	10.5 million Btu per hour
Main No. 2	42308	10.5 million Btu per hour
Main No. 3	21103	16.8 million Btu per hour
Main No. 4	21102	16.8 million Btu per hour
Main No. 5	21101	16.8 million Btu per hour
North No. 4	71296	26.2 million Btu per hour
North No. 5	71297	26.2 million Btu per hour

5. five natural gas-fired boilers with the following heat input rates and ID Nos.:

Boiler	ID No.	Heat Input Rate
South B-1	70958	1.3 million Btu per hour
South B-2	71298	5.0 million Btu per hour
South B-3	71299	5.0 million Btu per hour
Research Commons II No. 1	RC-1	6.6 million Btu per hour
Research Commons II No. 2	RC-2	6.6 million Btu per hour

6. four No. 2 fuel oil-fired emergency generators with the following heat input rates and ID Nos.:

Emergency Generator	ID No.	Heat Input Rate
Main EG-1	M-EG-1	17.5 million Btu per hour
Main EG-2	M-EG-2	17.5 million Btu per hour
Main EG-3	M-EG-3	11.3 million Btu per hour
North EG-1	N-EG-1	17.5 million Btu per hour

7. one natural gas-fired emergency generator with the following heat input rate and ID No.:

Emergency Generator	ID No.	Heat Input Rate
Research Common II EG-1	RCII-EG-1	1.2 million Btu per hour, and

8. laboratory fume hoods from the facility unless otherwise exempted by regulation,

in accordance with the completed application (APP022304) received June 23, 1995, including all plans, specifications, previous applications, and other supporting data, all of which are filed with the Department of Environment, Health, and Natural Resources and are incorporated as part of this Permit.

This Permit is subject to the following specified conditions and limitations including any TESTING REPORTING. OR MONITORING REQUIREMENTS:

A. SPECIFIC CONDITIONS AND LIMITATIONS

1. Any air emission sources or control devices authorized to construct and operate above must be operated and maintained in accordance with the provisions contained herein. The Permittee shall comply with applicable Environmental Management Commission Regulations, including Title - 15A North Carolina Administrative Code (NCAC), Subchapter 2D .0503, .0515, .0516, .0521, .0522, .0524-Subpart Dc, .0535, .1100 and.1200.

2. As required by 15A NCAC 2D .0521 "Control of Visible Emissions", visible emissions from the incinerator No. 42938; incinerator No. MWI-2; hydrated lime silo No. BF-1; boilers Nos. 42307, 42308, 21103, 21102, 21101, 71296, 71297, 70958, 71298, 71299, RC-1, and RC-2; emergency generators Nos. M-EG-1, M-EG-2, M-EG-3, N-EG-1, and RCII-EG-1 and facility laboratory fume hoods,established after July 1, 1971, shall not be more than 20 percent opacity when averaged over a six-minute period, except that six-minute periods averaging not more than 87 percent opacity may occur not more than once in any hour nor more than four (4) times in any 24-hour period. However, sources which must comply with 15A NCAC 2D .0524 "New Source Performance Standards" or .0525 "National Emission Standards for Hazardous Air Pollutants" must comply with applicable visible emissions requirements contained therein.

3. The Permittee shall take all reasonable precautions with any operation, process, handling, transportation, or storage facilities to prevent fugitive particulate, odorous, volatile organic compound or toxic emissions from becoming airborne.

4. NOTIFICATION REQUIREMENT - Within fifteen (15) days after start-up of the new facilities, the Permittee shall provide written notice of the start-up to the Regional Supervisor, Division of Environmental Management.

5. NOTIFICATION REQUIREMENT - As required by 15A NCAC 2D .0535, or for sources applicable to 15A NCAC 2D .0524 or .0525, when particulate, visible, odorous, sulfur dioxide, volatile organic compound or toxic emissions exceed Environmental Management Regulations for more than four (4) hours, the Regional Supervisor, Division of Environmental Management, shall be notified as promptly as possible, but in no case later than twenty-four (24) hours or on the next working day of becoming aware of the occurrence. Such notice shall specify the facility name and location, the nature and cause of the excess emission, the time when first observed, the expected duration, and the estimated rate of emissions. This reporting requirement does not allow the operation of the facility in excess of Environmental Management Commission Regulations.

6. The Permittee must comply with any applicable Federal, State, or Local requirements governing the handling, disposal, or incineration of hazardous, solid, or medical wastes, including the Resource Conservation and Recovery Act (RCRA) administered by the Division of Solid Waste Management.

7. EMISSION LIMITAT10N AND REPORTING REQUIREMENT - To comply with this permit and to avoid applicability of 15A NCAC 2D .0530 Prevention of Significant Deterioration, as requested by the Permittee, volatile organic compound (VOC) emissions from the facility must be less than 250.0 tons per year. Within thirty (30) days after each calendar year quarter, the Permittee must submit in writing to the Regional Supervisor, Division of Environmental Management, the monthly VOC emissions for the previous fifteen (15) months. The emissions must be calculated for each of the three (3) twelve (12) month periods over the previous fifteen (15) months. In addition, the Permittee must make available to officials of the Division of Environmental Management, upon request, copies of the emissions log. The Permittee must keep the emissions log on file for a minimum of three (3) years.

8. EMISSION LIMITATION AND REPORTING REQUIREMENT - To comply with this permit and to avoid applicability of 15A NCAC 2D .0530 Prevention of Significant Deterioration, as requested by the Permittee sulfur dioxide, particulate, and nitrogen oxide emissions from the combustion sources must be less than 250.0 tons per year, calculated each month for the previous fifteen (15) months. The emissions must be calculated for each of the three (3) twelve (12) month periods over the previous fifteen (15) months. To assure that emissions are less than the tons per year limit(s), the following permit limit(s) must not be exceeded:

Emission Source	Maximum Cubic Feet of Natural Gas per year (MMSCF/yr)	Maximum Gallons of No. 2 fuel oil per year (gal/yr)	Maximum Btu per year (MMBtu/yr)
Boiler Main No.1 (ID No. 42307)	26.63	325,872	73,584
Boiler Main No.2 (ID No. 42308)	26.63	325,872	73,584
Boiler Main No.3 (ID No . 21103)	42.25	517,049	116,753
Boiler Main No. 4 (ID No. 21102)	42.25	517,049	116,753
Boiler Main No. 5 (ID No. 21101)	42.25	517,049	116,753
Boiler North No. 4 (ID No. 71296)	66.45	813,130	183,610
Boiler North No. 5 (ID No . 71297)	66.45	813,130	183,610
Boiler North No. 6 (ID No. N-6)	85.22	1,042,787	235,468
Research Commons II No. l-Boiler (ID No. RC-1)	44.15	0	46,358

Emission Source	Maximum Cubic Feet of Natural Gas per year (MMSCF/yr)	Maximum Gallons of No. 2 fuel oil per year (gal/yr)	Maximum Btu per year (MMBtu/yr)
Research Commons II No. 2 Boiler (ID No. RC-2)	44.15	0	46,358
South B-1 Water Heater (ID No. 70958)	8.4	0	8,830
South B-2 Water Heater (ID No. 71298)	33.38	0	35,047
South B-3 Water Heater (ID No. 71299)	33.38	0	35,047
Main Emergency Generators			
Main-EG-1 (ID No. M-EG-1)	0	125,000	17,500
Main-EG-2 (ID No. M-EG-2)	0	125,000	17,500
Main-EG-3 (ID No. M-EG-3)	0	80,500	11,270
North Emergency Generator (ID No. N-EG-1)	0	125,000	17,500
Research Commons II Emergency Generator (ID No. RCII-EG-1)	8.0105	0	8,411

(a) The Permittee shall maintain records of production rates, throughputs, material usage, and other process operational information. The records shall be retained for a minimum of three (3) years from the date of recording.

9. To comply with the requirements of 15A NCAC 2D .1104, the toxic air pollutant emissions from the combustion sources (incinerators, boilers, and emergency generators) shall not exceed:

Toxic Air Pollutant	Allowable Emissions
arsenic & inorganic arsenic compounds	5.3 lb/yr
beryllium	1.84 lb/yr
cadmium	50.9 lb/yr
chromium (VI)	0.17 lb/yr
formaldehyde	0.027 lb/15 minutes
hexachlorodibenzo-p-dioxin	0.0092 lb/yr
hydrogen chloride	2.0 lb/15 minutes
hydrogen sulfide	0.5 lb/15 minutes
mercury, alkyl	1.6 lb/day
nickel metal	0.9 lb/day
tetrachlorodibenzo-p-dioxin	0.004 lb/yr

10. To comply with the requirements of lSA NCAC 2D .1104, the toxic air pollutant emissions from laboratory fume hoods shall not exceed;

Toxic Air Pollutant	Allowable Emissions
acetaldehyde	39.0 lb/15 min.
acetic acid	5.0 lb/15 minutes
acrolein	0.1 lb/15 minutes
acrylonitrile	156.0 lb/year
ammonia	4.0 lb/15 minutes
ammonium chromate	0.0003 lb/day
ammonium dichromate	0.0003 lb/day
aniline	6.0 lb/hour
arsenic & inorganic arsenic compounds	0.2 lb/year
aziridine	4.0 lb/ day
benzene	125.0 lb/year
benzidine & salts	0.02 lb/year
benzo(a)pyrene	34.0 lb/year
benzyl chloride	3.0 lblhour
beryllium	4.0 lb/year
beryllium chloride	4.0 lb/year
beryllium fluoride	4.0 lb/year
beryllium nitrate	4.0 lb/year
bis-chloromethyl ether	0.4 lb/year
bromine	0.3 lb/15 minutes
1 ,3-butadiene	177 lb/year
cadmium	6.0 lb/year
cadmium acetate	6.0 lb/year
cadmium bromide	6.0 lb/year
calcium chromate	0.1 lb/year

Toxic Air Pollutant	Allowable Emissions
carbon disulfide	114.0 lb/day
carbon tetrachloride	6957.0 lb/year
chlorine	23 lb/day, 1.0 lb/15 minutes
chlorobenzene	1,347.0 lb/day
chloroform	23,710 lb/year
chloroprene	269.0 lb/day, 20.0 Ib/hour
chromic acid	0.378 lb/day
chromium (VI)	0.1 Ib/year
cresol	13.0 lb/hour
p-dichlorobenzene	96.0 lb/15 minutes
dichlorodifuoromethane	151,827.0 lb/day
dichlorofluoromethane	306.0 lb/day
di(2-ethylhexyl) phthalate	18.0 lb/day
dimethyl sulfate	2.0 lb/day
1,4-dioxane	343.0 lb/day
epichlorohydrin	86,179.0 lb/year
ethyl acetate	815.0 lb/hour
ethylenendiamine	184.0 lb/day, 15.0 lb/hour
ethylene dibromide	415.0 lb/year
ethylene dichloride	3,946.0 lb/year
ethylene glycol monoethyl ether	73.0 lb/day, 11.0 lb/hour
ethylene oxide	28.0 lb/year
ethyl mercaptan	1.0 lb/hour
fluorides	10.0 lb/day, 1.0 lb/hour
formaldehyde	0.2 lb/15 minutes
hexachlorocyclo-pentadiene	0.4 lb/day, 0.1 lb/hour
hexachlorodibenzo-p-dioxin	0.1 lb/year
n- hexane	673.0 lb/day
hexane isomers	524.0 lb/15 minutes
hydrazine	0.4 lb/day
hydrogen chloride	0.4 lb/15 minutes
hydrogen cyanide	86.0 lb/day, 6.0 lb/hour
hydrogen fluoride	18.0 lb/day, 0.4 lb/15 minutes
hydrogen sulfide	3.0 lb/15 minutes
maleic anhydride	7.0 lb/day, 1.0 lb/hour
manganese & compounds	19.0 lb/day
manganese cyclopentadienyl tricarbonyl	0.4 lb/day
manganese tetroxide	4.0 lb/day
mercury, alkyl	0.04 lb/day
mercury, aryl and inorganic compounds	0.0012 lb/day
mercury, vapor	0.4 lb/day
methyl chloroform	7,346.0 lb/day, 357.0 lb/15 minutes

Toxic Air Pollutant	Allowable Emissions
methylene chloride	129,000 lb/year
methyl ethyl ketone	2,265.0 lb/day, 129.0 lb/15 minutes
methyl isobutyl ketone	1,567.0 lb/day, 44.0 lb/15 minutes
methyl mercaptan	0.3 lb/hour
nickel carbonyl	0.4 lb/day
nickel metal	4.0 lb/day
nickel, soluble compounds, as nickel	0.4 lb/day
nickel subsulfide	2.0 lb/year
nitric acid	1.0 lb/15 minutes
nitrobenzene	37.0 lb/day, 3.0 lb/hour
N-nitrosodimethylamine	52.0 lb/year
pentachlorophenol	2.0 lb/day, 0.15 lb/hour
perchloroethylene	197,278.0 lb/year
phenol	6.0 lb/hour
phosgene	2.0 lb/day
phosphine	0.2 lb/15 minutes
polychlorinated biphenyls	86.0 lb/year
potassium chromate	0.236 lb/day
potassium dichromate	0.236 lb/day
sodium chromate	0.236 lb/day
sodium dichromate	0.236 lb/day
strontium chromate	31,390.0 lb/year
styrene	34.2 lb/hour
sulfuric acid	3.8 lb/day, 0.6 lb/hour
tetrachlorodibenzo-p-dioxine	0.003 lb/year
1,1,1,2-tetrachloro-2,2-difluoroethane	31,835 lb/day
1,1,2,2-tetrachloro- 1,2-difluoroethane	31,835 lb/day
1,1,1,2-tetrachloroethane	6,541.0 lb/year
toluene	2,877.0 lb/day, 82.0 lb/15minutes
toluene-2,4-diisocyanate	0.3 lb/day, 0.02 lb/15 minutes
trichloroethylene	13,140.0 lb/year
trichlorofluoromethane	3,260.0 lb/hour
1,1,2-trichloro-1,2,2-trifluoroethane	1,383.0 lb/15 minutes
vinyl chloride	395.0 lb/year
vinylidene chloride	73.0 lb/day
xylene	1,653.0 lb/day, 95.0 lb/15 min

(a) The Permittee shall maintain records of production rates, throughputs, material usage, and other process operational information. The records shall be retained for a minimum of three years from the date of recording.

(b) Within thirty (30) days of each calendar year quarter, the Permittee shall

submit the net annual chemical usage to the Raleigh Regional Supervisor, Division of Environmental Management.

(i) If the net annual chemical usage exceeds 5 % of the permitted emission limits for any four consecutive quarters, the Raleigh Regional Supervisor, Division of Environmental Management shall re-evaluate the Air Toxics Compliance Plan and request additional compliance procedures as necessary.

(ii) The net annual chemical usage is defined as the quantity of toxic air pollutants purchased less the quantity disposed in waste and consumed in chemical reactions for any four consecutive quarters.

(iii) For comparison with permitted emission limits, the net annual chemical usage (NACU) shall be divided by the following factors:

Emission Limit	NACU Divisor
Annual	1 year
24 hour	260 (based on 52 weeks/year x 5 days/week)
1 hour	2,080 (based on 52 weeks/year x 5 days/week x 8 hours/day)
15 minute	8,320 (based on 52 weeks/year x 5 days/week x 8 hours/day x 4 fifteen minute periods/hour)

11. 15A NCAC 2D .0524 "NEW SOURCE PERFORMANCE STANDARDS" - For the Boiler North (ID No. 6), the Permittee shall comply with all applicable provisions, including the notification, testing, reporting, record keeping, and monitoring requirements contained in Environmental Managefnent Commission Standard 15A NCAC 2D .0524, "New Source Performance Standards" (NSPS) as promulgated in 40 CFR 60, Subpart Dc, including Subpart A "General Provisions".

(a) NSPS REPORTING REQUIREMENTS - In addition to any other notification requirements to the Environmental Protection Agency (EPA), the Permittee is required to NOTIFY the Regional Supervisor, Division of Environmental Management, WRITING, of the following:

i) the sulfur content of the distillate oil combusted in an affected facility shall not exceed 0.5 percent by weight. Within thirty days after each

calendar year quarter, the Permittee must submit in writing to the Regional Supervisor, Division of Environmental Management, the sulfur content of the distillate oil combusted in an affected facility. If fuel supplier certification is used to demonstrate compliance, fuel supplier certification shall include the following information:

(A) the name of the oil supplier;

(B) a statement from the oil supplier that the oil complies the specification under the definition of distillate oil in 40 CFR 60.41(c); and

(C) a certified statement signed by the owner or operator of an affected facility that the records of fuel supplier certification submitted represents all of the fuel combusted during the quarter;

ii) the owner or operator of an affected facility shall record and maintain records of the amounts of each fuel combusted during each day; and

iii) all records required under this section shall be maintained by the owner or operator of an affected facility for a period of two years following the date of such record.

(b) NSPS EMISSIONS LIMITATIONS - As required by 15A NCAC 2D .0524, the following Permit limits shall not be exceeded:

AFFECTED FACILITY	POLLUTANT	EMISSION LIMIT
Boiler North No. 6	visible emissions	20 percent opacity (6 minute average), except for one 6 minute period per hour of not more than 27 percent opacity

12. In no case shall the following emission limitations be exceeded:

Source	Pollutant	Emission Limit(s)
Incinerator ID No. MWI-2	Particulate Matter, Hydrogen Chloride	4.0 lb/hr 4.0 lb/hr or 90% control
Incinerator ID No. 42938	Hydrogen Chloride	4.0 lb/hr

13. TESTING REOUIREMENT - Under the provisions of North Carolina General Statute 143-215.108, the Permittee shall demonstrate compliance with the emission limit(s) by testing the incinerator (ID No. MWI-2) for particulate emissions while charging at 90 percent or greater capacity, utilizing EPA Reference Method No. 5, contained in 40 CFR 60, Appendix A.

AFFECTED FACILITY	POLLUTANT	EMISSION LIMIT
Incinerator ID No. MWI-2	Particulate	4.0 lb/hr

(a) To afford the Regional Supervisor, Division of Environmental Management, the opportunity to have an observer present, the Permittee shall provide the Regional Office in writing, at least fifteen (15) days notice of any required performance test(s).

(b) The test results must be submitted to the Regional Supervisor, Division of Environmental Management, in accordance with the approved procedures of the Environmental Management Commission within ninety (90) days of the initial operation date.

(c) This permit may be revoked, with proper notice to the Permittee, or enforcement procedures initiated, if the results of the test(s) indicate that the facility does not meet applicable limitations.

(d) The source shall be responsible for ensuring, within the limits of practicality, that the equipment or process being tested is operated at or near its maximum normal production rate, or at a lesser rate if specified by the Director or his delegate.

(e) All associated testing costs are the responsibility of the permittee.

14. Medical waste incinerators Nos. 42938 and MWI-2 shall meet the following requirements:

(a) the primary chamber temperature shall be at least 1,200 degrees Fahrenheit,

(b) the secondary chamber temperature shall be at least 1,800 degree Fahrenheit, and

(c) the gases generated by the combustion shall be subjected to a minimum temp. of 1,800 degrees Fahrenheit for a period of not less than one second.

15. No waste materials containing or resulting in emissions of asbestos or polychlorinated biphenyl (PCB) shall be incinerated in incinerator No. 42938.

16. Incinerator ID No. 42938 shall charge only type 1, 3, 4, and 5 wastes and Incinerator ID No. MWI-2 shall charge only type 0, 1, 2, 3, 4, 5, and 6 wastes. The type of waste burned code table is as follows:

Code	Principal components usual sources and typical moisture content
0	Highly combustible waste, paper, wood, cardboard cartons, including up to 10 percent treated papers, plastic or rubber scraps; from commercial and industrial sources; 10 percent moisture.
1	Combustible waste, paper, cartons, rags, wood scraps, combustible floor sweepings; from domestic, commercial, and industrial sources; 25 per cent moistures
2	Rubbish and garbage; from residential sources; 50 percent moisture.
3	Predominantly animal and vegetable waste; from restaurants, hotels, markets, institutional, commercial and club sources; 70 percent moisture.
4	Carcasses, organs, solid organic wastes; from hospitals, laboratories, slaughterhouses, animal pounds, and similar sources; 85 percent moisture.
5	Gaseous and semi-liquid industrial process waste; variable moisture.
6	Solid and semi-solid by-product waste, such as rubber, plastics, wood waste, etc., from industrial operations; variable moisture.

B. GENERAL CONDITIONS AND LIMITATIONS

1. REPORTS, TEST DATA, MONITORING DATA, NOTIFICATIONS, AND REQUESTS FOR RENEWAL shall be submitted to the:
Regional Supervisor
North Carolina Division of Environmental Management
3800 Barrett Drive

Raleigh, NC 27609
(919) 571-4700

2. PERMIT RENEWAL REQUIREMENT - The Permittee shall request permit extension by letter. The letter should include the permit number, the appropriate renewal fee, description of any modifications, and should be sent to and must be received by the Regional Supervisor, Division of Environmental Management at least ninety (90) days prior to the expiration date of this permit.

3. ANNUAL FEE PAYMENT - The Permittee must pay the annual administering and compliance fee or submit a certification for exemption within thirty (30) days after being billed by the Division. Failure to timely pay the fee or submit a certification for exemption in accordance with 15A NCAC 2H .0609(m) will cause the Division to initiate action to revoke the Permit.

4. EQUIPMENT RELOCATION - A new Air Permit shall be obtained by the Permittee prior to establishing, building, erecting, using, or operating the emission sources or air cleaning equipment at a site or location not specified in this Permit.

5. REPORTING REQUIREMENT - Any of the following that would result in previously unpermitted, new, or increased emissions must be reported to the Regional Supervisor, Division of Environmental Management:

   (a) changes in the information submitted in the application regarding facility emissions;

   (b) changes that modify equipment or processes of existing permitted facilities; or

   (c) changes in the quantity or quality of materials processed.

   If appropriate, modifications to the Permit may then be made by the Division of Environmental Management to reflect any necessary changes in the Permit conditions. In no case are any new or increased emissions allowed that will cause violation of the emission limitations specified herein.

6. This Permit is subject to revocation or modification by this Division upon a determination that information contained in the application or presented in support thereof is incorrect, conditions under which this Permit was granted have changed, or violations of conditions contained in this Permit have occurred. The facility shall be properly operated and maintained at all times in a manner that will effect an overall reduction in air pollution. Unless otherwise specified by this Permit, no air emission source may be operated without the concurrent operation of its associated air cleaning device(s) and appurtenances.

7. This Permit is nontransferable by the Permittee. Future owners and operators must

obtain a new Air Permit from the Division of Environmental Management.

8. The issuance of this permit in no way absolves the Permittee of liability for any potential civil penalties which may be assessed for violations of State law which have occurred prior to the effective date of this permit.

9. This Permit does not relieve the Permittee of the responsibility of complying with all applicable requirements of any Federal, State, or Local water quality or land quality control authority.

10. Reports on the operation and maintenance of the facility shall be submitted by the Permittee to the Regional Supervisor, Division of Environmental Management at such intervals and in such form and detail as may be required by the Division. Information required in such reports may include, but is not limited to, process weight rates, firing rates, hours of operation, and preventive maintenance schedules.

11. A violation of any term or condition of this Permit shall subject the Permittee to enforcement pursuant to North Carolina General Statute 143-215.114, including assessment of civil penalties.

12. Pursuant to North Carolina General Statute 143-215.3(a)(2), no person shall refuse entry or access to any authorized representative of the Division of Environmental Management who requests entry or access for purposes of inspection, and who presents appropriate credentials, nor shall any person obstruct, hamper, or interfere with any such representative while in the process of carrying out his official duties. Refusal of entry or access may constitute grounds for Permit revocation and assessment of civil penalties.

Permit issued this the 17 th day of August, 1995.

NORTH CAROLINA ENVIRONMENTAL MANAGEMENT COMMISSION

Kenneth Schuster, P.E., Regional Supervisor
Division of Environmental Management
By Authority of the Environmental Management Commission

Air Permit No. 4612R9

IX. Medical Waste Management Plan

Scope

All personnel involved in the packaging, labeling, loading and preparations of shipping papers of Regulated Medical Waste for interfacility transport are required to adhere to the following procedures.

Procedure

Regulated Medical Wastes consist of paper, plastic, glass, cultures, bodily fluids, blood, media, sharpes, animal wastes, carcasses and laboratory equipment contaminated with biological agents (≥BSL 3) or pathogens. These wastes are generated in Glaxo Wellcome Inc. laboratories and animal management facilities and are managed for disposal by the Environmental Affairs group. Materials exposed to BSL 3 or above are treated to remove or reduce the hazard prior to removal from the lab for ultimate disposal by incineration in accordance with 15A NCAC 13B.1207(3).

Packaging

The Environmental Affairs Group provides generator with boxes marked with the Universal Biohazard Symbol and the words "Biohazardous Waste". In addition, each box is accompanied by a 3 mil. polypropylene bag meeting 15A NCAC 13B.1204(a)(1) and marked with the Biohazard symbol and the words "Infectious Waste". These materials constitute the minimum packaging to be used by the laboratory for packaging Regulated Medical Wastes.

Boxes must be securely taped on the bottom prior to loading the box with wastes. Inner plastic liner must be tied or taped securely prior to removal from the lab. Individual sharpes containers may be removed as waste if the top is secured and the Universal Biohazard Symbol and the words "Biohazard" are present on the container.

Labeling

Boxes for interfacility transport are labeled with the generating facility address, phone number and contact name; transporter address, phone number and contact name; and, receiving facility address, phone number and contact name. The box is dated prior to shipment.

Loading

Accumulated Regulated Medical Waste is inspected for signs of leakage or spillage prior to loading for transport. Boxes are not stacked greater than three high. Boxes are secured using straps or retainers to prevent shifting during transport. Shipping papers are prepared indicating the appropriate DOT shipping name, generator name, receiving facility name, transporter and the piece count loaded.

Unloading

Containers are inspected for signs of leakage or spillage during transport. A piece count is taken and the shipping paper is reconciled and signed. Copies of the shipping paper are maintained at the receiving facility and one copy is returned to the generator. Copies are retained for three years.

Exhibit # 23

Spill Response

In the event of leakage or spillage involving Regulated Medical Waste or residues during storage or transport, spill remediation must be completed to treat and remove the spilled/leaked materials. From a distance observe the extent of the spill and the nature of the materials involved. Spray a mist of 10% Clorox to cover the spilled materials from the outside of the spill toward the center. Allow 2 minutes for aerosols to settle before attempting to collect the waste. Don latex gloves under neoprene or butyl gloves and a faceshield or safety glasses. Use a broom and dust pan to collect spilled solids and a mop to collect spilled liquids. Package solids in another Biohazard Waste box. Mop the area with a weak solution of Clorox and dispose or liquids to the sanitary sewer. For liquids spilled during transport, saturate the area with Clorox spray and allow 2 minutes for aerosols to settle. Absorb the free liquids and cover the remaining wetted area with Clorox.

Exhibit # 24

Daily/Weekly Ash Sample Log
Incinerator MWI-2 or No. 42938

	Sample Date	Sample Time	Sampler Initials
1			
2			
3			
4			
5			
6			
7			
8			
9			
10			
11			
12			
13			
14			
15			
16			
17			
18			
19			
20			
21			
22			
23			
24			
25			
26			
27			
28			
29			
30			

Exhibit # 25

Composite Sample Log
Incinerator MWI-2 or No. 42938

Sample ID. #	Sample Date	Sample Time	Laboratory ID.	Analytical Result ID.

Exhibit # 26

Burroughs Wellcome Co.

3030 Cornwallis Road
P.O. Box 12700
Research Triangle Park, N.C. 27709-2700

cables & telegrams
Tabloid Raleigh, N.C.
TWX 5109270915
tel. 919-248-3000

October 25, 1994

CERTIFIED MAIL
RETURN RECEIPT REQUESTED

Mr. William R. Hocutt
Waste Determination Coordinator
Solid Waste Section
North Carolina Department of Environment, Health and Natural Resources
P.O. Box 27687
Raleigh, NC 27611-7687

Subject: Disposal of Incinerator Ash
Burroughs Wellcome Co.

Dear Mr. Hocutt:

Enclosed you will find DEHNR Form 3151 requesting approval for Burroughs Wellcome Co. (BW Co.) to dispose of incinerator ash in the Durham Landfill (Permit #32-01). The ash is generated from the operation of BW Co's non-hazardous solid waste incinerator located at the RTP, NC facility. A composite sample taken from 24 drums of incinerator ash has been analyzed in accordance with .0103(d) of the Solid Waste Management Rules, 15A NCAC 13B (see attached analysis summary).

An average of 15 fifty-five gallon drum equivalents (approximately 4 cubic yards) of ash will be generated each month. BW Co. desires to have flexibility in how the ash can be delivered to the landfill and what the frequency of disposal will be. BW Co. is requesting approval to ship the ash in either 55 gallon steel drums or in bulk. The method of shipment will determine the frequency of disposal. It is anticipated that the annual volume of ash generated for disposal will be 180 fifty-five gallon drum equivalents (approximately 49 cubic yards).

BW Co. will appreciate any efforts to expedite approval of this wastestream. This identical wastestream was previously approved by your office for disposal at the Durham Landfill (see attached approval dated December 21, 1992).

Sincerely,

Michael D. Graves

Michael D. Graves
Environmental Operations Specialist

Enclosures

STATE OF NORTH CAROLINA
DEPARTMENT OF ENVIRONMENT, HEALTH AND NATURAL RESOURCES
SOLID WASTE MANAGEMENT DIVISION; SOLID WASTE SECTION

PROCEDURE AND CRITERIA FOR WASTE DETERMINATION

This procedure will be used by the Solid Waste Management Division to determine whether a waste is (1) hazardous as defined by 10 NCAC 10F, and (2) suitable for disposal at a solid waste management facility. The types of wastes that will be evaluated by this procedure are primarily, but not exclusively, industrial and commercial wastes and sludges, and Publicly Owned Treatment Works Sludges.

The Solid Waste Management Division reserves the right to request additional information or waive some of the requirements based on the type of waste if it deems necessary. The Division may also require some wastes to be treated or altered to render the wastes environmentally immobile prior to disposal at a sanitary landfill. Wastes disposed at sanitary landfills must be non-liquid which can be properly managed in accordance with the "Solid Waste Management Rules". APPROVAL TO DISPOSE OF THE WASTE SHALL ALSO BE OBTAINED FROM THE OWNER OR OPERATOR OF THE LANDFILL PRIOR TO DISPOSAL.

The following information is required for an evaluation. Incomplete waste determination forms will be returned to the generator without review. An asterisk (*) denotes information required for Publicly Owned Treatment Works.

A* GENERAL INFORMATION

1. Name, TELEPHONE NUMBER and mailing address of facility or person generating waste
   Burroughs Wellcome Co. (919) 248-3000
   3030 Cornwallis Road
   RTP, NC 27709
2. Specific location of waste (i.e. SR. #, county, city, etc...)
   Burroughs Wellcome Co., 3030 Cornwallis Road, Durham County, RTP, NC
3. What is the waste? Incinerator Ash
4. What volume of disposal will there be? 180 fifty-five gallon drum equivalents per year (approx. 49 cu. yds. per year)
5. What frequency of disposal will there be? Will vary, dependent on method of shipment (ie, drums or bulk)
6. Explain either the manufacturing process of how the waste was generated.
   Ash is generated from incineration of non-hazardous waste.

B INFORMATION FOR HAZARDOUS (RCRA) DETERMINATION (10 NCAC 10f .0029

1. Is the waste listed under .0029 (e) (i.e., 40 CFR 261.31 - 261.33)? If yes, list number. No

*2. Does the waste exhibit any of the four characteristics as defined by .0029 (d) (i.e., 40 CFR 261.21-261.24)? (Attach laboratory results for EP Toxicity, Reactivity, Ignitability, Corrosivity.) No

C INFORMATION FOR LANDFILLING DETERMINATION

1. Does the waste contain any hazardous waste constituents listed in .0029(e), Appendix VIII (i.e., 40 CFR 261, Appendix VIII)? If yes, what constituents and what concentration? (Attach laboratory results) No
2. What other constituents are present and in what concentration?
   (Attach laboratory results) See attached analysis summary
3. Will the handling and disposal of this waste create dust emissions which may cause a health hazard or nuisance to landfill personnel. No

*4. Does the waste pass the "paint filter" test for free liquids (Method 9095 in S.W. 846)? (Attach laboratory results) Yes (The waste contains no free liquids)

*5. Which solid waste management facility is the request for (name of landfill and permit number, incinerator, etc...)? Durham Landfill (DEHNR Permit #32-01)

*6. Specify how the waste will be delivered - in bulk or containers (i.e. barrels, bags, etc.) 55 gallon steel drums and/or bulk

Following are the maximum leachable (TCLP) contamination levels and pH for solid waste disposal in N.C. Landfills. Primary N.C. drinking water and Federal hazardous limits are included for comparison. Chemical analysis is required at detection limits permitting assessment at or below the maximum landfill levels. Individual pH values must be >2.0 and <12.5; average values accepted are normally 4.0 - 10.0.

The generator is responsible to determine if their waste meets N.C. landfill acceptable levels. Analysis for herbicides, pesticides and organics MUST BE PERFORMED WHENEVER KNOWLEDGE OF THE WASTE MAKES THEIR PRESENCE A POSSIBILITY. Leachable metals must always be determined. Inquire if any questions exist on interpretation.

	EPA HAZARDOUS LEVEL (mg/l)	NC DRINKING WATER MCL (ppm)	NC LANDFILL MAXIMUM (mg/l)
METALS			
ARSENIC	5.0	0.05	0.50
BARIUM	100.0	1.00	10.00
CADMIUM	1.0	0.01	0.10
CHROMIUM	5.0	0.05	0.50
LEAD	5.0	0.05	0.50
MERCURY	0.2	0.002	0.02
SELENIUM	1.0	0.01	0.10
SILVER	5.0	0.05	0.50
HERBICIDES & PESTICIDES			
CHLORDANE	0.03	-	0.003
ENDRIN	0.02	0.0002	0.002
HEPTACHLOR	0.008	-	0.0008
LINDANE	0.40	0.004	0.04
METHOXYCHLOR	10.00	0.10	1.00
TOXAPHENE	0.50	0.005	0.05
2,4-D	10.00	0.10	1.00
2,4 T-TP SILVEX	1.00	0.01	0.10
ORGANICS			
BENZENE	0.5	0.005	0.05
CARBON TETRACHLORIDE	0.5	0.005	0.05
CHLOROBENZENE	100.0	-	10
CHLOROFORM	6.0	-	0.60
0-CRESOL	200.0	-	20
M-CRESOL	200.0	-	20
P-CRESOL	200.0	-	20
1,4 DICHLOROBENZENE	7.5	0.075	0.75
1,2 DICHLOROETHANE	0.5	0.005	0.05
1,1 DICHLOROETHYLENE	0.7	0.007	0.07
2,4 DINITROTOLUENE	0.13	-	0.013
HEXACHLOROBENZENE	0.13	-	0.013
HEXACHLORO-1,3-BUTADIENE	0.5	-	0.05
HEXACHLOROETHANE	3.0	-	0.30
METHYL ETHYL KETONE	200.0	-	20
NITROBENZENE	2.0	-	0.20
PENTACHLOROPHENOL	100.0	-	10
PYRIDINE	5.0	-	0.50
TETRACHLOROETHYLENE	0.7	-	0.07
TRICHLOROETHYLENE	0.5	0.005	0.05
2,4,5-TRICHLOROPHENOL	400.0	-	40
2,4,6-TRICHLOROPHONOL	2.0	-	0.20
VINYL CHLORIDE	0.2	0.002	0.02

"I hereby certify that the information submitted in regard to Incinerator Ash (name of waste) is true and correct to the best of my knowledge and belief."

(print name) Michael D. Graves

(signature) Michael D. Graves

(title) Environmental Operations Specialist

(date) 10/25/94

All questions concerning this "procedure" should be directed to the Solid Waste Section at (919) 733-0692. Answer specific questions in space provided. Attach additional sheets if necessary.

Complete all information, sign, and submit to:

Solid Waste Management Division; Solid Waste Section
P.O. Box 27687; Raleigh, NC 27611
Attn: Waste Determination

DEHRN Form 3151

Analysis of Incinerator Ash

A composite sample, taken from 24 drums of incinerator ash, was analyzed for pH, free liquids and RCRA metals/organics. The Toxicity Characteristic Leaching Procedure (TCLP) was used for determination of metals and organics. Listed below are the results of these analyses.

TEST	DETECTION LIMIT (mg/l)	RESULT
pH	------	10.29
Free Liquid	------	None
Arsenic	0.50	BDL
Barium	10.00	BDL
Cadmium	0.10	BDL
Chromium	0.50	BDL
Lead	0.50	BDL
Mercury	0.02	BDL
Selenium	0.10	BDL
Silver	0.50	BDL
Benzene	0.05	BDL
Carbon Tetrachloride	0.05	BDL
Chlorobenzene	10.00	BDL
Chloroform	0.60	BDL
o-Cresol	20.00	BDL
m-Cresol	20.00	BDL
p-Cresol	20.00	BDL
1,4-Dichlorobenzene	0.75	BDL
1,2-Dichloroethane	0.05	BDL
1,1-Dichloroethylene	0.07	BDL
2,4-Dinitrotoluene	0.013	BDL
Hexachlorobenzene	0.013	BDL
Hexachloro-1,3-Butadiene	0.05	BDL
Hexachloroethane	0.30	BDL
Methyl Ethyl Ketone	20.00	BDL
Nitrobenzene	0.20	BDL
Pentachlorophenol	10.00	BDL
Pyridine	0.50	BDL
Tetrachloroethylene	0.07	BDL
Trichloroethylene	0.05	BDL
2,4,5-Trichlorophenol	40.0	BDL
2,4,6-Trichlorophenol	0.20	BDL
Vinyl Chloride	0.02	BDL

BDL = Below Detection Limit

Drawings "Under Seperate Cover"