Permit No.	Date	Document ID No.
11-07	**April 7, 2009**	**7217**

CDM

5400 Glenwood Avenue, Suite 300
Raleigh, North Carolina 27612
tel: 919 787-5620
fax: 919 781-5730

April 7, 2009

Mr. Allen Gaither
North Carolina Department of Environmental and Natural Resources
Division of Waste Management
Solid Waste Section
2090 US Highway 70
Swannanoa, North Carolina 28778

Subject: Buncombe County Solid Waste Management Facility
Buncombe County, North Carolina
LFGTE Project – Additional Information Request

Dear Mr. Gaither:

The North Carolina Division of Water Quality's Construction Grants & Loans (CG&L) Section is reviewing the County's application for stimulus funding that was submitted on April 3, 2009. To qualify as a **Category 1** project and be eligible for the first round of funding, CG&L requires that all permits must be in place. During their review of the County's funding application, CG&L noted that the Solid Waste Section (SWS) has requested additional information and that construction of the project is contingent following receipt and approval of this information. CDM is providing the requested information to the SWS for review in anticipation that an approval for construction may be issued. CG&L has indicated that a letter should be issued within the next two days for the project to remain under consideration in Category 1.

To help meet this requirement, CDM has prepared this letter and the supporting attachments in response to your request for additional information in the **Intent to Issue Permit** letter dated April 2, 2009. Each specific request is listed below, along with a response and reference to the supporting information that is attached. If you find that all of the information requests have been adequately addressed, we ask that you provide a letter authorizing construction as soon as possible. The letter should be e-mailed or faxed to Mr. Ken Pohlig at 919-715-6229 (Ken.Pohlig@ncmail.net).

Request No. 1 *– A technical discussion of the construction practices for drilling, excavation, backfilling, material and fabrication, waste disposal, control of nuisance odors, vectors and windblown material, personnel safety, decontamination of tools and machinery, testing protocols and frequencies, etc.*

CDM

Response – Attachment 1 includes the specifications: Landfill Gas Extractor Well (02749); Landfill Gas Valves and Appurtenances (02640); and HDE Pipe (02623). These have been prepared and incorporated into the design documents for this project that were submitted as part of the funding application. The requested items are discussed in multiple sections throughout these specifications.

Request No. 2 – *Design data and calculations to include slope of the lateral gas pipes as well as production and transport capacities of the system including the existing condensate recovery system.*

Response – Attachment 2 includes (1) a layout of the gas collection system; (2) calculations of condensate flows to verify condensate recovery system capacities; (3) a table listing lateral gas pipe slopes for each pipe length; and (4) a condensate transfer pump system drawing depicting details of the in-place sumps. Each of the four existing condensate pumps is capable of handling a condensate flow of 7 gallons per minute (10,080 gallons per day). The pumps were sized based on landfill build-out conditions.

Request No. 3 – *If the generator set has been specified please provide a discussion of the safety mechanisms of the LFGTE system. This should include a by-pass to send LFG to the flare system if there is a problem with the LFGTE system.*

Response – The LFGTE facility will use the flare station blower to provide vacuum to the wellfield. As shown on Sheet D-2 (Attachment 3), a connection will be made to the discharge pipe of the blower to provide gas flow to the generator. Two automated valves will be installed to direct gas flow, one on the new pipe connection and one on the blower discharge pipe between the connection point and the flare stack. A gas flow meter will be used by the facility controls to operate the valves. When the gas flow exceeds the capacity of the generator the valve directing flow to the flare stack will be opened as needed to flare excess gas.

Additional safety mechanisms are included in the Generator specification (also in Attachment 3). The generator includes internal monitoring for temperature, lube oil, combustion, voltage, etc., all of which are indicated on the generator control panel. This is presented in the Section 2.05, Engine Instrumentation and Controls. The generator control panel includes alarms and shut-downs if operating conditions deviate excessively from normal.

Request No. 3 – *A construction schedule and completion report to include, but not limited to:* [items not listed, as they pertain to post-construction requirements].

Response – The proposed construction schedule is as follows. The schedule assumes the applied for SRF/stimulus funding through CG&L has been committed to the project.

CDM

Milestone	Date
Negotiate PPA with Energy Utility	May 30 – July 23, 2009
Procurement	June 18 – July 23, 2009
Construction NTP	July 24, 2009
GCS/Wellfield Construction	August - October 2009
Wellfield/Gas Testing and GCS Operation	October 2009
Gas Conditioning Skid Installation	March 2010
Generator Installation*	March/April 2010
Substantial & Final Completion	April 2010

** The generator has a nine month lead time from order.*

If you have any questions or need additional information, please do not hesitate to call me at (919) 787-5620.

Very truly yours,

John Boyer, P.E., BCEE
Camp Dresser & McKee

xc: E. Mussler, NCDENR SWS
J. Creighton/J. Mears/K. Smith, BCGSD
J. Wiseman/K. Yang/C. Gabel, CDM

Attachment 1

Landfill Gas Extraction Well and Related Specifications

SECTION 02623

HIGH DENSITY POLYETHYLENE (HDPE) PIPE

PART 1 GENERAL

1.01 SCOPE OF WORK

A. Furnish all labor, materials, equipment and incidentals required to install the high density polyethylene landfill gas collection pipe, fittings and appurtenances as shown on the Drawings and as specified herein.

1.02 RELATED WORK

A. Testing gas headers is included in Section 01445

B. Earthwork is included in Section 02200.

1.03 SUBMITTALS

A. Submit to the Engineer, in accordance with Section 01300, the following:

1. List of materials to be furnished, the names of the suppliers and the date of delivery of materials to the site.

2. The origin of the resin to be used in the manufacturing of the pipe including the suppliers name and production plant, as well as brand name and number.

3. Documentation from the resin's manufacturer showing results of the following tests for resin identification:

a. Melt Flow Index ASTM D1238

b. Density ASTM D1505

4. Manufacturer quality control manual describing implementation of quality control procedures during pipe manufacturing process.

5. Pipe manufacturer's certification of compliance with this Section.

6. Complete, detailed shop drawings of all polyethylene pipe, including the location of all fittings, joints and connections to structures.

7. Manufacturer's recommendations for handling, storing and installing pipe and fittings.

8. For each shipment of pipe a manufacturer's certification that the pipe was manufactured from the same resin identified in Paragraph 1.03A1 above.

1.04 REFERENCE STANDARDS

A. American Society for Testing and Materials (ASTM)

1. ASTM D1248 - Standard Specification for Polyethylene Plastics Extrusion Materials for Wire and Cable.

3. ASTM D1603 - Standard Test Method for Carbon Black in Olefin Plastics.

4. ASTM D2239 - Standard Specification for Polyethylene (PE) Plastic Pipe (SIDR-PR) Based on Controlled Inside Diameter..

5. ASTM D3350 - Standard Specification for Polyethylene Plastic Pipe and Fittings Materials.

7. ASTM F714 - Standard Specification for Polyethylene (PE) Plastic Pipe (SDR-PR) Based on Outside Diameter.

B. Where reference is made to one of the above standards, the revision in effect at the time of bid opening shall apply.

1.05 QUALITY ASSURANCE

A. The polyethylene pipe shall be furnished by manufacturers who are fully experienced and qualified in the manufacture of the polyethylene pipe to be furnished. The pipe shall be designed constructed and installed in accordance with the best practices and methods and shall comply with these Specifications.

1.06 SYSTEM DESCRIPTION

A. The high density polyethylene pipe specified herein shall be suitable for landfill gas and condensate. The maximum temperature of the liquids will be 120 degrees F.

PART 2 PRODUCTS

2.01 MATERIALS

A. The pipe shall be made from High Density Polyethylene (HDPE) resin compound qualified as Type III, Category 5, Class C by ASTM D1248 with a minimum density of 0.955.

B. The polyethylene compound shall be suitably protected against degradation by ultraviolet light as required by ASTM D1603.

C. If rework compounds are required, only those generated in the manufacturer's own plant from resin compounds of the same class and type from the same raw material supplier shall be used.

D. Compliance with the above requirements must be certified by the pipe supplier.

2.02 DESIGN

A. The outside diameter shall conform to ASTM D2239 for outside diameter.

B. In no case shall the wall thickness of the pipe be less than 0.335-inch.

C. The polyethylene pipe including the polyethylene appurtenances at joints shall be Series 100 and shall be Driscopipe 1000 as manufactured by Phillips Products Co. Inc., Williamstown, KY or PolyPipe as manufactured by PolyPipe Industries, Gainesville, TX.

2.03 JOINTING METHODS

A. Lengths of pipe shall be assembled into suitable installation lengths by the butt-fusion process. All pipe so joined shall be made from the same class and type of raw material made by the same raw material supplier.

B. Installation lengths shall be joined by the use of stub ends. All stub ends for attachment to the polyethylene pipe shall be made from the same type and grade of polyethylene, from the same raw material supplier as the pipe and shall be butt-fused to the pipe ends.

C. The polyethylene stub ends at joints shall be backed up by epoxy coated steel flanges conforming to ANSI B16.1 and shaped as necessary to suit the outside dimensions of the pipe. The stub ends shall be connected with corrosion resisting bolts and nuts of Type 316 stainless steel as specified in ASTM A 726 and ASTM A307. Flat gaskets of 1/8-inch black reinforced rubber conforming to ANSI B16.21 shall be installed between the opposing ends of the stub ends.

D. In no case shall threaded male or female adapters of any plastic material be used for adapting polyethylene pipe to the systems, fitting or auxiliary equipment of other materials, or for joining the installation lengths to each other.

E. Termination to pipes, valves or fitting made of other material shall be by the flanged joints outline in Paragraph C. The pipe adjacent to these joints and to the joints themselves must be rigidly supported for a distance of one pipe diameter beyond the flange.

PART 3 EXECUTION

3.01 HANDLING

A. Care shall be taken during transportation of the pipe such that it will not be cut, kinked or otherwise damaged.

B. Ropes, fabric or rubber protected slings and straps shall be used when handling pipes. Chain, cables or hooks inserted into the pipe ends shall not be used. Two slings spread apart shall be used for lifting each length of pipe. Pipe or fittings shall not be dropped or dragged onto rocky or unprepared ground.

C. Pipes shall be stored on level ground, preferably turf or sand, free of sharp objects which could damage the pipe. Stacking of the pipe shall be limited to a height that will not cause excessive deformation of the bottom layers of pipes under anticipated temperature conditions. Where necessary due to ground conditions the pipe shall be stored on wooden sleepers, spaced suitably and of such width as not to allow deformation of the pipe at the point of contact with the sleeper or between supports.

D. The handling of the joined pipeline shall be in such a manner that the pipe is not damaged by dragging it over sharp and cutting objects. Slings for handling the pipeline shall not be

positioned at butt fused joints. Section of the pipes with deep cuts and gouges (greater than 1/8 of the pipe wall thickness) shall be removed and the ends of the pipeline rejoined.

3.02 LAYING PIPE

A. Butt-fusion of pipes and fittings shall be performed in accordance with the pipe manufacturer's recommendations as to equipment and technique. Depending on site conditions, butt-fusion joining shall be performed in or outside of the excavation.

3.03 CLEANING

A. As pipe laying progress and at the conclusion of the work, thoroughly clean all of the new pipe lines to remove all pipe shavings, dirt, stones, pieces of wood or other material which may have entered during the construction period. Debris cleaned from the lines shall be removed from the job site. If, after this cleaning, any obstructions remain, they shall be removed.

END OF SECTION

SECTION 02640

LANDFILL GAS VALVES AND APPURTENANCES

PART 1 GENERAL

1.01 SCOPE OF WORK

A. Furnish all labor, materials, equipment, appurtenances, and incidentals required and install gate valves and landfill gas wellheads complete and ready for operation and test all valves specified herein.

1.02 RELATED WORK

A. Landfill Gas Header Testing is included in Section 01445.

B. Earth excavation and backfill is included in Section 02200.

C. HDPE Pipe is included in Section 02623.

1.03 SUBMITTALS

A. Submit to the Engineer, in accordance with Section 01300, a list of all materials to be furnished, the names of the suppliers and the date of delivery of materials on the job site.

B. Submit the following documentation to the Engineer for approval of the gas well heads prior to construction:

1. Manufacturer's installation instructions.

2. An isometric drawing showing the dimensions and components of the wellhead and adapters where applicable.

3. Manufacturer's Operation and Maintenance (O&M) Manual.

4. Manufacturer's warranty information.

1.04 REFERENCE STANDARDS

A. American Water Works Association (AWWA)

1. AWWA C111 - Rubber-Gasket Joints for Ductile-Iron Pressure Pipe and Fittings.

2. AWWA C500 - Metal-Seated Gate Valves for Water Supply Service.

3. AWWA C504 - Rubber-Seated Butterfly Valves.

B. Underwriters Laboratories (UL)

C. Where reference is made to one of the above standards, the revision in effect at the time of bid opening shall apply.

PART 2 PRODUCTS

2.01 MATERIALS

A. Plastic Butterfly Valves

1. Butterfly valves shall be of the wafer type.

2. Body of valve shall be PVC, disc shall be polypropylene.

3. Valve seat and seals shall be EPDM.

4. Seat shall extend over inner surface plus outside face of body to form self gasketing feature.

5. Valve shall be suitable for use in landfill gas system.

6. Operators for all valves shall be 2-piece landfill extension stem (ASAHI 3011001 and 3011003) with 2" square nut (ISAHI 3051060 or 3051080) for In-Line buried service.

7. Valves shall be as manufactured by Asahi/America, Type 56, or equal.

8. Shaft shall be 403 stainless steel.

9. Disc and stem seal shall be of double "O" ring type and be made of same material as valve seat.

10. Spacers at butterfly valves shall be as recommended by the valve and/or piping manufacturer to prevent interference between the valve disc and the interior of the piping. Spacers shall be fabricated or molded of the same type of HDPE as used in the piping. Spacers shall be provided on both sides of each valve and gaskets shall be used on both sides of each spacer. Pipe bevels will not be acceptable.

B. Plastic Gate Valves

1. Heavy duty overlapping bonnet style PVC gate valves with EPDM seals and threaded ends. Rated 200 psi @ 73 deg. F.

2. Body of valve shall be PVC and the plug shall be polypropylene.

3. Valves shall be suitable for use in landfill gas system.

4. Operators for all buried valves shall be 2-piece landfill extension stem (ASAHI 3011001 and 3011003, Spears PVC stem extension kit) with 2" square nut (ASAHI 3051060 or 3051080, or Spears Model 2021-020) for In-Line buried service.

5. Valves shall be non rising stem, Spears non-shock PVCI, Asahi/America or equal.

6. Stem shall be PVC.

7. Disc and stem seal shall be double O-ring, EPDM.

C. Plastic Ball Valves

1. True union PVC ball valve with extension stems (as required).

2. Ball valves shall be of the socket (ANSI) type.

3. Body of valve shall be PVC.

4. Valve seats shall be Teflon backed with EPDM or Viton.

5. Valves shall be suitable for use in a landfill gas system.

6. Operators for all valves shall be 2-piece landfill extension stem (ASAHI 3011001 and 3011003) with 2" square nut (ISAHI 3051060 or 3051080) for In-Line buried service.

7. Valves shall be Spears True Union Ball Valves, Hayward Safe Block True Union, Asahi/America Duo-Bloc true Union or equal.

8. Stem shall be PVC.

9. Ball and stem seal shall be of EPDM double O-ring type.

D. Wellhead Pipe Material and Fittings

1. The landfill gas collection system wellheads shall consist of well head piping, flow control gate valve, gas temperature gage, quick connect gas sampling, static and impact pressure ports, flex connector, and PVC union disconnect and dust cap. Wellhead shall have a removable orifice plate. Wellhead piping and fittings shall be Schedule 80 PVC. Adapters shall be Schedule 40 PVC. The wellhead shall be 1-1/2-in PC-1000-FX with a ½ inch orifice plate as manufactured by Shaw LFG Specialties, LLC, or equal. Identification of the Shaw LFG Specialties, LLC wellhead is only to denote the quality standard of the product desired and does not restrict bidders to the use of the Shaw LFG Specialties, LLC wellhead.

2. The equipment shall be capable of withstanding the rigors of landfill gas recovery application including internal high vacuum, weathering, gas constituent and ultraviolet light exposure. The wellhead shall be tight and leak free and shall be height adjustable in the field using adapter brushings. Equipment supplied under this Section shall have a proven performance of not less than two years in actual landfill service. The wellhead assembly shall be supplied as a complete manufactured unit.

3. PVC piping used in the manufacturer and installation of the wellhead shall meet the requirements of ASTM D1785 for Schedule 40, 80, and 120 PVC pipe.

4. PVC fittings used in the manufacture and installation of the wellhead shall meet the requirements of ASTM D2467 for PVC socket-type fittings.

5. PVC joint connections shall meet the requirements of ASTM D2855 for solvent cemented PVC joints.

6. Flanges used for installing the wellhead on existing well casings made from non-PVC material shall conform to ANSI B16.1 (1975) or ANSI B16.5 (1981).

E. Wellhead Valve Material

1. Material used to manufacture the flow control gate valve body shall meet the requirements of ASTM D1784 for rigid PVC compounds.

F. Wellhead Orifice Plate

1. Orifice plate shall be replaceable.

2. Orifice plate bore shall be ½ inch diameter.

G. Wellhead Fittings

1. PVC fittings shall be Schedule 80 socket fittings. Adapters shall be Schedule 40 PVC.

2. An elastomeric PVC flexible coupling (Fernco 1056-66 or equal) with stainless steel shear ring shall be used to clamp the sliding compression fitting bushing to the top of the well.

H. Wellhead Temperature Gauge

1. The temperature gauge shall have a stainless steel probe and watertight dial cover. It shall be threaded to the wellhead.

I. Wellhead Quick Connect Ports

1. Quick connect ports shall be positive sealing and shall be constructed of delrin acetal.

2. Quick connect ports shall be Colder Products delrin acetal PLC-100-04 ¼-in MPT, ¼-in flow, shutoff type coupling bodies, each supplied with a Caplugs type EZ 835-12, black, body vinyl dust cap with extended grip tab and ¾ inch long body. Two Colder Products delrin acetal LC 220-04, ¼-in ID hose barb, ¼-in flow, straight thru inserts shall be provided with each wellhead assembly. The inserts shall be packaged in a heavy gage clear zipper seal plastic bag with the manufacturer's model number clearly marked on the bag.

3. Five spares of each type port and insert used shall be supplied. Each type port shall be stored in clear zipper seal plastic bags with the manufacturer's model number clearly marked on the bag. A factory sealed package of three hundred spare dust caps shall be supplied.

J. Wellhead Valve

1. The flow control gate valve shall be as specified in this Section.

K. Wellhead Flex Connector

1. Flex connectors shall be constructed of a high quality polyurethane film. They shall be resistant to UV and ozone and be high abrasion, tear and puncture resistant.

2. The connectors shall remain flexible over a full temperature range of -60EF to +200EF and have a bend radius of approximately 1.25 times the diameter. They shall be a minimum of

48 inches in length. Connectors shall be Ultraflex Polyurethane flexible hose with factory formed cuffs, Kanaflex piping or equal.

3. Connectors shall be firmly clamped to adjacent piping with a band clamp fabricated with a 304 stainless steel band screw and screw retainer shall be Ultraflex T-Bolt or equal.

O. Nuts, Bolts, Washers and Gaskets

1. All bolted connections shall be made with UNC bolts and matching nuts with minimum protection of threads through the nut equal to the nut thickness. All connections shall be made with flat washers under both the bolt heads and the nuts.

2. For above ground installation, nuts, bolts and washers shall be cadmium plated or galvanized steel.

3. For below ground installation or installation with H2S concentration above 50 ppm, nuts, bolts and washers shall be Type 304 stainless steel.

4. All nuts and bolts shall be installed with a heavy coating of Never Seez, pure nickel anti-seize compound.

5. Gasket for flange installation shall be either neoprene or red silicone rubber.

2.02 PERFORMANCE SPECIFICATIONS

A. Volumetric Flow Rating

1. The nominal flow capacity of each wellhead shall be a minimum of 2 scfm and a maximum of 30 scfm.

B. Accuracy

1. The measurement tube or orifice assembly shall be pre-calibrated and lab certified. The measurement device shall have an accuracy and repeatability of 5% through the recommended flow range when used and maintained in accordance with the Manufacturer's instructions and recommendations.

C. Pressure Design Ratings

1. All wellhead components and connections shall be designed to withstand a vacuum of 40 inches of mercury.

PART 3 EXECUTION

3.01 WELLHEAD INSTALLATION

A. Wellhead Installation

1. The wellhead shall be handled according to written instructions supplied by the manufacturer.

2. The wellhead shall be installed such that measurement tube assembly is concentric with the well casing.

3. Where the wellhead connects directly to the collection header, a branch fitting ("Tee" or "Wye") shall be installed on the header in accordance with accepted methods and standards appropriate for the header material. The wellhead shall be connected to the header branch fitting in accordance with the manufacturer's written instructions. Adapters shall be used as recommended by the manufacturer.

4. The wellhead shall be installed on the well casing in accordance with the manufacturer's written instructions.

5. Where a flex connection is used, the flex connection shall be installed in accordance with the manufacturer's written instructions. A stainless steel hose clamp must be used on both ends of the flex connection and a stainless steel shear ring shall encircle the body of the flex connection.

3.03 TESTING

A. Testing of valves shall be in conjunction with testing of the landfill gas header and collection system per Section 01445. Operation shall be satisfactory to the Engineer in all respects.

B. After installing the wellhead, the following minimum tests shall be performed:

1. Test orifice plate for unobstructed flow and accuracy of readings.

2. Test valve by opening and closing three times. Valve shall seal tight.

END OF SECTION

SECTION 02749

LANDFILL GAS EXTRACTION WELLS

PART 1 GENERAL

1.01 SCOPE OF WORK

A. Furnish all labor, materials, equipment and incidentals required and install landfill gas extraction wells as shown on the Drawings and as specified herein.

1. Drilling equipment and tools shall be steam cleaned prior to being mobilized onto the site and before leaving the site.

2. Meet all health and safety requirements prior to the beginning work and for the duration of the project.

B. These Specifications are intended to give a general description of what is required, but do not cover all variations that may occur during well construction. The Specifications are intended to cover the successful completion of the gas wells as herein specified, whether every detail is specifically mentioned or not.

1.02 RELATED WORK

A. High Density Polyethylene (HDPE) pipe is included in Section 02623.

B. Granular materials are included in Section 02200.

1.03 SUBMITTALS

A. Within 15 days following the Effective Date of the Agreement, submit the following information in accordance with Section 01300:

1. A complete list of construction material and supplies as specified herein, including the name of the manufacturer, for the items listed below.

a. Non-perforated pipe

b. Perforated pipe

c. Caps, collars, and tees

d. Stone

e. Bentonite

2. The source and location of potable water supply, written authorization of the suppliers, method of transporting and containing the potable water, if necessary.

3. Material samples of the washed gravel.

4. Health and Safety Plan.

B. During all gas extraction well drilling, a daily detailed driller's report shall be maintained and submitted as requested by the Engineer including, but not necessarily limited to the presence of groundwater and/or leachate. The report shall give a complete description of all subsurface material encountered, number of feet drilled, number of hours on the job, shutdown due to breakdown, feet of screen and casing set and other pertinent data requested by the Engineer.

C. During drilling of each borehole, maintain at the extraction well site a complete log setting forth the following:

1. The reference point of all depth measurements.

2. The depth of which each change of material occurs.

3. The identification of the material.

4. The depth of interval of the material.

5. The results of work space monitoring requiring by the Health and Safety Plan.

6. Other pertinent data requested by the Engineer.

D. Upon completion of each gas extraction well, submit to the Engineer a report to include the following:

1. The name and location of the job.

2. The date of the borehole drilling (start and finish).

3. Gas extraction well number and coordinates, if known.

4. Surface elevation.

5. Sampling numbers and depths and a description of refuse encountered while drilling.

6. Thickness of similar strata and apparent changes with depth.

7. The depth of location of any lost drilling materials, or tools.

8. The depth, diameter and description of the gas extraction well casing and screen.

9. The total depth of the completed gas extraction well.

10. The nominal hole diameter of the borehole.

11. Amount and size description of washed gravel and bentonite used.

12. The amount of grout (number of bags) used.

13. Other pertinent data requested by the Engineer.

1.04 REFERENCE STANDARDS

A. American Society for Testing and Materials (ASTM)

1. ASTM D2513 - Standard Specification for Thermoplastic Gas Pressure Pipe, Tubing and Fittings.

2. ASTM D3350 - Standard Specification for Polyethylene Plastic Pipe and Fittings Materials.

B. Where reference is made to one of the above standards, the revision in effect at the time of bid opening shall apply.

1.05 DESCRIPTION OF THE GAS EXTRACTION WELL

A. The borehole shall be 36-in in diameter. The gas wells shall be 6-in diameter Schedule 80 PVC pipe, installed at various depths by the bucket auger method to an approximate depth a minimum of 5-ft and a maximum of 10-feet above the base liner system of the landfill, or as shown on the Drawings. Driller shall predetermine the depth of each gas well installation at the specific location selected prior to drilling to verify the minimum separation above the base liner system. Minimum separation above the base liner system shall be re-verified should any of the gas well locations be revised.

B. Boreholes shall be drilled at the locations indicated on the Drawings, unless otherwise approved by the Engineer.

C. Alternate drilling or construction methods may be approved by the Engineer where justified.

1.06 SITE DESCRIPTION

A. The solid waste landfill is located in Buncombe County, North Carolina. The locations of the gas extraction well sites are shown on the Drawings. The gas extraction wells shall be installed in the current landfill which has the potential to contain hazardous or toxic vapors. Possible hazardous vapors that could be released during trenching and drilling operations include, but are not limited to the following: methane, carbon dioxide, carbon monoxide, hydrogen sulfide, polyvinyl chloride, toluene, and benzene.

B. The landfill may be undergoing continuous settling and compaction due to the various subsurface waste conditions typical of a municipal solid waste landfill.

C. The Contractor shall be responsible for providing electrical generating equipment, if needed.

1.07 DELIVERY, STORAGE AND HANDLING

A. All parts and materials shall be properly protected so that no damage, deterioration or contamination shall occur from time of shipment until installation is completed.

B. If in the opinion of the Engineer, parts and materials are damaged, deteriorated, or contaminated before acceptance of the well, the material and/or the gas well will be rejected. Replace the labor, parts and materials at no additional cost to the Owner.

C. Materials shall be stored to ensure preservation of their quality and fitness for work. When deemed necessary, they shall be placed on wooden platforms or other hard clean surfaces and not on the ground. Stored materials shall be located so as to facilitate prompt inspection.

1.08 PROJECT/SITE REQUIREMENTS

A. Typical subsurface conditions to be encountered at the landfill may include sand, sludge, compost, municipal refuse and obstructions such as large buried items.

B. The Contractor shall be aware that unfavorable subsurface geologic conditions may exist at the site selected for the gas extraction wells such as loss of circulation and collapse of the formation. If in the opinion of the Contractor the encountered subsurface conditions are unfavorable for the installation of an individual gas extraction well due to composition of the refuse, promptly notify the Engineer verbally and in writing, of such conditions.

C. The information concerning the subsurface conditions and problems of which the Contractor is advised is for the sole purpose of assisting in the preparation of his/her bid. The Owner, Engineer and their consultants do not guarantee the accuracy and the conditions and concerns stated above. These conditions and concerns may not be indicative of the conditions at the site.

D. In the event subsurface conditions are found to be substantially different from what has been indicated, promptly and before such conditions are disturbed, notify the Engineer verbally and in writing of such conditions.

E. Take necessary precautions to prevent damage to any above- or below-ground existing structures. Notify the Engineer of any damaged underground structures and make repairs or replacements before backfilling.

F. During the progress of construction, it is expected that minor relocations of the work will be necessary. Such relocations shall be made only by direction of the Engineer. If obstructions are encountered during drilling, notify the Engineer verbally and in writing before continuing with the construction in order that the Engineer may make such field revisions as are necessary. If the Contractor shall fail to so notify the Engineer when an obstruction is encountered and shall proceed with the construction despite this interference, he/she shall do so at his/her own risk. The Contractor shall receive no payment for any footage drilled in an abandoned borehole where relocation has not been directed by the Engineer.

G. The Contractor shall cover exposed boreholes and minimize the length of exposed trenches for safety and to minimize odors. Contractor shall not leave open trenches or boreholes overnight.

1.09 PERMITS

A. Obtain any Federal, State, or local permits required for constructing the gas wells, discharging material from the site, or clearing of the site for work or access.

B. Do not perform any work on the gas wells until these permits are obtained.

C. Furnish separate copies of all permits to the Owner and the Engineer as the permits are received. Copies of all permits shall be furnished to the Engineer ten days prior to drilling.

1.10 QUALIFICATIONS

A. The Contractor responsible for constructing gas wells shall be licensed in the State of North Carolina as a licensed driller, employing only competent workers for the execution of this work

and all such work shall be performed under the direct supervision of an experienced driller satisfactory to the Engineer.

B. The driller shall be capable of identifying subsurface conditions, and maintaining complete and current logs and daily notes for the gas vent/well completion reports.

C. The Engineer and Owner may make any other investigations deemed necessary to determine the ability of the Contractor to perform the work and the Contractor shall furnish to the Engineer all such information and data for this purpose as the Engineer may request.

D. Complete the work described in accordance with applicable portions of the requirements of the Federal, State, or local authorities as well as per 29 CFR 1910, OSHA Standards for Hazardous Waste site workers.

E. The driller and the installation crew shall be trained and experienced as required by OSHA for hazardous waste site workers.

F. Furnish a list of all personnel who will be involved in the project and their corresponding qualifications and experience.

1.11 NOTIFICATION

A. Submit to the Engineer in writing, ten (10) days prior to start of work, the proposed work schedule, including the following:

1. The starting date of the gas extraction well construction.

2. The dates and order of gas extraction well drilling.

3. The completion date of gas extraction well drilling.

4. Any anticipated work interruptions of duration greater than 24 hours with exception of weekends and holidays.

B. The Contractor shall notify the Engineer in writing, prior to start of work, the number of drilling rigs and personnel to be used on the project. Any change in the number of rigs and personnel shall require written notification of the Engineer, 48 hours prior to the change.

C. The Contractor shall notify the Engineer 24 hours prior to the start or restart of any gas well drilling activities.

D. No work shall be performed without completing the notification requirements specified above.

1.12 EXTRACTION WELL ACCEPTANCE CRITERIA

A. Each of the new gas extraction wells shall be approved based on the following criteria, in the opinion of the Engineer:

1. The extraction well is structurally sound in conformance with the Specification.

2. The borehole is drilled plumb and true to line.

B. All caps, pipes, gravel packs and cap shall be set to the depths shown on the Drawings or as directed by the Engineer.

1.13 HEALTH AND SAFETY PROGRAM

A. The work to be performed at this site involves, but is not necessarily limited to, the following possible conditions and hazards:

1. Typical subsurface conditions at the landfill may include sand, sludge, compost, rock, municipal refuse and obstructions such as large buried items. Precautions will be necessary to address excavation safety.

2. There is a potential for a health hazard exposure to an explosive atmosphere to occur.

3. Falling into exposed boreholes or open trenches.

B. Develop and implement a health and safety plan. The plan shall be consistent with the requirements of the following:

1. OSHA Safety and Health Standards 29 CFR 1910 (General Industry), US Department of Labor, Occupational Safety and Health Administration, 1984. Hereafter referred as "29 CFR 1910." Available by calling 513-533-8236.

2. OSHA Safety and Health Standards 29 CFR 1926/1910 (Construction Industry), US Department of Labor, Occupational Safety and Health Administration, 1985. Hereafter referred to as "CFR 1926/1910."

3. Standard Operating Safety Guidelines, US Environmental Response Branch, Hazardous Response Support Division, Office of Emergency and Remedial Response, November 1984. Hereafter referred to as "EPA Guidelines."

C. The plan shall include but not necessarily be limited to, the following components, as appropriate.

1. Characterization and Evaluation

2. Safe Work Practices

3. Engineering Safeguards

4. Medical Surveillance

5. Environmental and Personnel Monitoring
6. Personnel Protective Equipment

7. Training

8. Standard Operating Procedures

9. Control and Decontamination

10. Emergency and Contingency Planning

11. Logs and Reports

12. Hazard Communication Reports

13. Material Handling and Disposal

14. Sanitation

15. Excavation

D. Determination of the appropriate level of worker safety equipment and procedures shall be the responsibility of the Contractor as a result of initial site survey, review of existing data and continued safety and health monitoring program performed in accordance with the requirements specified herein.

E. The plan shall be approved by signature of a designated representative of the Contracting firm, stating that the plan is in compliance with 29 CFR 1910 and 29 CFR 1926/1910. The signed plan shall be furnished to the Owner and Engineer prior to commencing site work activities as evidence of compliance.

F. Should the Contractor seek relief from, or substitution for, any portion or provision of the plan, such relief or substitution shall be at the sole risk of the Contractor and shall be preceded by notification of the Engineer in writing. The requested modification shall not be implemented until receipt of notification of change is confirmed in writing by the Engineer.

G. Should the Contractor modify any portion or provision of the plan, notify the Engineer in writing of such modifications.

H. Any disregard for the provision of these Health and Safety requirements shall be deemed just and sufficient cause for termination of the Contract without compromise or prejudice to the rights of the Contractor.

1.14 TRAINING

A. The Contractor shall be required to certify that all his/her personnel performing site activity that may require an upgrade to respiratory protection, have received appropriate safety training in accordance with 29 CFR 1910.134 provided by the Contractor. Documentation of such training shall be submitted to the Engineer before any employees will be allowed to work.

B. Instruct each employee in the recognition and avoidance of unsafe conditions and the regulations applicable to the work environment to control or eliminate any hazards or other exposure to illness or injury.

C. All employees required to enter into a confined or enclosed space shall be instructed as to the nature of the hazards involved, the necessary precautions to be taken and in the use of protective and emergency equipment required. Comply with any specific regulations that apply to work in dangerous or potentially dangerous areas.

D. Additionally, the Contractor shall be responsible for and shall guarantee that, personnel not successfully completing the required training are not permitted to perform work that required upgrade to respiratory protection.

1.15 MEDICAL SURVEILLANCE

A. Persons shall not be assigned to tasks requiring the use of respirators unless it has been determined that they are physically able to perform the work and use the equipment. The respirator user's medical status shall be reviewed annually.

1.16 PERSONAL PROTECTIVE EQUIPMENT

A. Furnish all onsite personnel with appropriate personal safety equipment and protective clothing and ensure that all safety equipment and protective clothing is kept clean and well maintained. Protocols formally changing the level of protection shall be described in the health and safety plan. In addition, the following items shall be addressed.

1. All prescription eyeglasses in use on the site shall be safety glasses. Prescription lens inserts shall be provided for full face respirators.

2. Footwear used onsite shall be steel-toed, steel shank safety shoes or boots.

3. A written respiratory protection program addressing site-specific respiratory usage shall be developed and submitted to the Engineer. Programs for respiratory protection shall conform to 29 CFR 1910.134.

4. All onsite personnel shall wear a hard hat when engaging in construction or drilling activities.

5. All personal protective equipment work onsite shall be decontaminated or properly disposed of at the end of the work day.

6. Each respirator shall be individually assigned and not interchanged between workers without cleaning and sanitizing. A procedure for assuring periodic cleaning and maintenance shall be furnished and addressed in the health and safety plan.

1.17 PERSONAL HYGIENE AND DECONTAMINATION

A. A discussion of personnel decontamination protocols to be followed by site workers shall be submitted as part of the health and safety plan. In addition, the following conditions and procedures shall be followed:

1. Smoking and chewing shall be prohibited except in a designated Contractor provided smoking area.

2. Eating and drinking shall be prohibited except in a designated Contractor provided lunch or break area.

3. All outerwear shall be removed prior to entering lunch area or smoking area and prior to cleansing hands.

4. Contractor personnel shall be required to thoroughly cleanse their hands and other exposed areas before entering the smoking or lunch areas.

1.18 EMERGENCY EQUIPMENT AND FIRST AID REQUIREMENTS

A. Develop contingency plans including evacuation procedures and routes to places of refuge or safe distances from the danger area, for the following potential emergencies: chemical exposure, personal injury, potential or actual fire or explosion, environmental accident (spill or release). In the event of any emergency, without delay: take diligent action to remove or otherwise minimize the cause of the emergency; alert the Engineer and Owner whatever measures might be necessary to prevent any repetition of the conditions or actions leading to, or resulting in, the emergency.

B. Emergency medical care services shall be prearranged at a nearby medical facility with established emergency routes. The staff at the facility shall be advised of the potential medical emergencies that might result.

C. Establish emergency communications with health and emergency services. The name of this facility, name of contact, emergency routes and emergency communications arrangement shall be provided in the health and safety plan. In addition furnish the following equipment.

   1. At least one first aid kit shall be provided and maintained fully stocked at a first aid station which is in proximity to the work.

   2. 2A-10 B:C type dry chemical fire extinguisher shall be provided at the site office.

D. Should any unforeseen or safety-related factor, hazard, or condition become evident during the performance of work at this site, it shall be the Contractor's responsibility to bring such to the attention of the Engineer both verbally and in writing as quickly as possible, for resolution. In the interim, take prudent action to establish and maintain safe working conditions and to safeguard employees, the public and the environment in accordance with the Health and Safety Plan.

E. Should the Contractor seek relief from, or substitution for, any portion or provision of the plan, such relief or substitution shall be requested of the Engineer in writing. The requested modification will not be implemented until authorized in writing by the Engineer.

F. Should the Contractor modify any portion or provision of the plan, notify the Engineer in writing of such modifications.

G. Any disregard for the provision of these Health and Safety requirements shall be deemed just and sufficient cause for termination of the Contract without compromise or prejudice to the rights of the Contractor.

PART 2 PRODUCTS

2.01 PIPE CASING

A. PVC Pipe

   1. All gas/well casings shall be new, non-perforated, Schedule 80, flush coupled, square threaded, UV-resistant, PVC pipe in accordance with ASTM D1784 and ASTM D1785 and as manufactured by Celanese Piping Systems, Chemical Division; Cabot Company or equal. Casing shall have nominal diameter as shown on the Drawings.

2. Fittings shall be flush coupled, square threaded, UV-resistant as designated in ASTM, D2467 or D2466, as shown on the Drawings and as designated in ASTM D2464 and shall be compatible with the pipe where installed.

3. Pipe shall be furnished perforated, as shown on the Drawings, in the locations shown. Each pipe length shall be marked with the manufacturer's name or trademark, size, material code and pressure class.

2.02 SLOTTED PIPE

A. Gas Vent Screen

1. The slots shall be cut into the pipe at the factory after manufacture. The slotted pipe shall have six rows of .080 slots on 1/4-in centers along the length of the pipe.

2.03 STONE PACK

A. A stone pack shall be used around the perforated and/or slotted pipe for the vertical wells. The stone pack material shall be NCDOT No. 57 stone. The stone pack shall be placed around and below the pipe and will vary in length as dependent on each gas vent's/well's completion. The material should be free of roots, trash and other deleterious material.

2.04 FILL MATERIAL

A. The fill material shall consist of common fill as specified in Section 02200.

2.05 SAND/BENTONITE MIXTURE

A. Bentonite shall be granular bentonite as manufactured by Federal Bentonite; Baroid Benseal or equal. Bentonite pellets shall not be used as a substitute material. The sand shall be natural, classified as noncontaminated, free of roots, trash and other deleterious material and shall have passed through a No.16 sieve.

B. The sand/bentonite mixture shall be a blend of one part sand to one part granular bentonite, mixed dry and hydrated immediately prior to placement in the annular space. The slump range for sand/bentonite mixture shall be 1-2-in. For each sand/bentonite mixture batch mixed, a slump test shall be performed.

2.06 CAPS

A. The bottom of each gas well casing shall be fitted with a cap as shown on the Drawings. A 1-in diameter hole shall be drilled through the center of the cap and the cap shall be cemented to the pipe.

PART 3 EXECUTION

3.01 WELL PIPE INSTALLATION

A. The 6-in diameter well pipe shall be secured approximately 6-in above the bottom of the borehole to allow the stone pack to form beneath the perforations as shown on the Drawings. The perforations shall extend to within 1-ft of the bottom of the well.

B. Fittings shall be flush coupled and square threaded. The use of cement or glue shall not be permitted.

C. Every effort shall be made on the part of the Contractor to assure pipe plumbness and centralization. The Contractor shall use spacers at the perforated section of the well to assure the pipe is maintained within the center of the borehole. The Engineer shall approve the spacer design prior to its use.

D. The installation of pipe shall be strictly in accordance with the manufacturer's technical data and printed instructions.

3.02 BOREHOLE DRILLING

A. A 36-in diameter borehole shall be drilled at each site for a landfill gas extraction well to a depth as shown on the Drawings.

B. Drill the boreholes for the landfill gas extraction wells using an open bucket auger method. Material removed from this landfill as a result of borehole drilling shall be disposed at the landfill as directed by Engineer.

3.03 STONE PACK , COMMON FILL AND SAND/BENTONITE INSTALLATION

A. All gravel pack installation shall be performed in the presence of the Engineer. The stone pack shall be installed in the annular space by a method approved by the Engineer that will avoid bridging. The stone pack shall be installed from the base of the borehole to 1-ft above the perforated portion of the casing.

B. The sand and bentonite mixture shall be installed on top of the common fill, as shown on the Drawing, in the presence of the Engineer. The installation shall be by a method approved by the Engineer. The sand/bentonite mixture shall be placed from the top of the common fill to existing grade with the total depth of 2 feet. The sand and bentonite mixture shall be permitted to dry for at least one hour after installation.

C. All installation of stone pack, fill material and sand/bentonite shall be performed in the presence of the Engineer.

3.04 GAS EXTRACTION WELL ABANDONMENT

A. If the Contractor fails to meet the Gas Well Acceptance Criteria as stated above, or abandons the gas well because of loss of tools, casing collapse, or other causes related to well construction operations, Contractor shall abandon the gas well. Under these conditions, the Contractor shall receive no payment for time, materials, or work for abandonment and shall receive no compensation for the abandoned gas well and shall replace the abandoned gas well at the unit prices bid on Bid Form.

B. Notify the Engineer immediately if any obstruction is encountered during drilling for a gas well. If directed by the Engineer to abandon a borehole, fill the borehole with common fill, or another gravel approved by the Engineer to a depth which is within 10-ft of the top of the landfill at the site. Fill in remaining upper borehole internal with a sand/bentonite mixture approved by the Engineer.

C. If borehole abandonment is directed by the Engineer, the Contractor shall be paid for footage drilled at the abandoned borehole.

3.05 PROTECTION AND SITE CLEAN-UP

A. At all times during the progress of the site work, use all reasonable precautions to prevent either tampering with the landfill gas wells or the entrance of foreign material.

B. All landfill gas extraction wells shall be protected by the provision of temporary supports or other means of protection approved by the Engineer. The Contractor shall replace any landfill gas well which is damaged by construction operations at the Contractor's expense.

C. Immediately upon completion of site work, remove all of the equipment, materials and supplies from the site of the work, remove all surplus materials and debris, fill in all holes or excavations and restore any disturbed areas to their original condition. Properly dispose of the refuse and material removed from the borehole.

END OF SECTION

Attachment 2

Gas Collection System and Condensate Recovery System

Design Calculations and Drawings

CALCULATION COVER SHEET

Project Title	Buncombe County Solid Waste Management Facility LFGTE Project
Client	Buncombe County, NC
Project number	6447-64253
Calculation title	Condensate flowrate
Calculated by/date	K. Yang 04/07/2009
Reviewed by/date	M. Brinchek 04/07/2009
Purpose of the calculation	Determine condensate flow rate for each condensate recovery system (CRS) to verify system capacities Current condensate pumps (AP-4/BL by Clean Environment) is rated at 7 gpm
Results	CRS-1 (near leachate pond) = 0.32 gpm CRS-2 (northwest area) = 0.32 gpm CRS-3 (near flare station) = 0.32 gpm
Conclusion	All existing CRS pumps are adequately sized

CDM					
CLIENT	Buncombe	JOB NUMBER	6447-64253	COMPUTED BY	KJY
PROJECT	LFTGE	DATE CHECKED	4/7/2009	DATE	4/7/2009
DETAIL	Condensate flow	CHECKED BY	WMB	PAGE NO.	1-2

OBJECTIVES:

Determine the landfill gas condensate flow rate expected to be generated when gas cools off.

GIVEN:

Gas flow rate that each sump will be subjected to was determined by KY Pipe models.

ASSUMPTIONS:

1. Max gas temperature expected at the wellhead (LandTec range) = **125** deg. F
2. Min gas temperature expected in header piping system (LandTec range) = **50** deg. F
3. The partial pressure of condensate vapor in landfill gas is to saturation pressure at the wellhead (100% humidity).
4. The condensate vapor content of landfill gas is similar to that of water vapor in air at the same temperature and pressure.
5. Used a landfill gas flowrate for each CRS = 490 scfm to be conservative
6. Current condensate pumps (AP-4/BL by Clean Environment) is rated at 7 gpm

REFERENCE:

Chemical Engineers Handbook, 6th Edition, Page 15-6.

CALCULATIONS:

1. Determine the average initial water content of the gas at 125 deg. F.

$\mathbf{W_{125\,F} = H_s / V_a}$; where: H_s = Saturation humidity

V_a = Volume of air

At 125 F=> $\mathbf{H_s}$ = **9.0E-02** lb H_2O/lb Air (from Fig 3-4)

$\mathbf{V_a}$ = **14.7285** cf/lb Air (ideal gas law eq)

$$\text{So, } W_{125\,F} = \frac{H_s}{V_a}$$

$$\text{So, } W_{125\,F} = 6.11E\text{-}03 \ \frac{\text{lb } H_2O/\text{lb Air}}{\text{cf/lb Air}}$$

CDM					
CLIENT	Buncombe	JOB NUMBER	6447-64253	COMPUTED BY	KJY
PROJECT	LFTGE	DATE CHECKED	4/7/2009	DATE	4/7/2009
DETAIL	Condensate flow	CHECKED BY	WMB	PAGE NO.	2-2

2. Determine the average water content of the gas when cools to 50 deg. F.

H_s = **8.0E-03** lb H_2O/lb Air (from Fig 3-4)

V_a = **12.84023** cf/lb Air (ideal gas law eq)

So, $W_{50\,F} = \dfrac{H_s}{V_a}$

So, $W_{50\,F}$ = **6.23E-04** $\dfrac{\text{lb } H_2O/\text{lb Air}}{\text{cf/lb Air}}$

3. Determine the change in gas water content of the gas when cools from 125 deg. F to 50 deg. F.

$\Delta W = W_{125\,F} - W_{50\,F}$

ΔW = **5.49E-03** $\dfrac{\text{lb } H_2O/\text{lb Air}}{\text{cf/lb Air}}$

4. Determine the condensate flow.

$Q_c = (Q_{lfg}) \times (\Delta W) \times (1/p_{50\,F})$

where:

Q_c =	condensate flow rate		
Q_{lfg} =	landfill gas flow rate at sump		
ΔW =	change in water content as gas cools	lb H_2O/cf_{gas}	
$p_{50\,F}$ =	density of water at 50 deg. F=	**8.343**	lb H_2O/ gal

CRS	Q_{lfg} (scfm)	Q_c (gpm)	FS
1	490	0.32	2.3
2	490	0.32	2.3
3	490	0.32	2.3

Buncombe County -- LFGTE

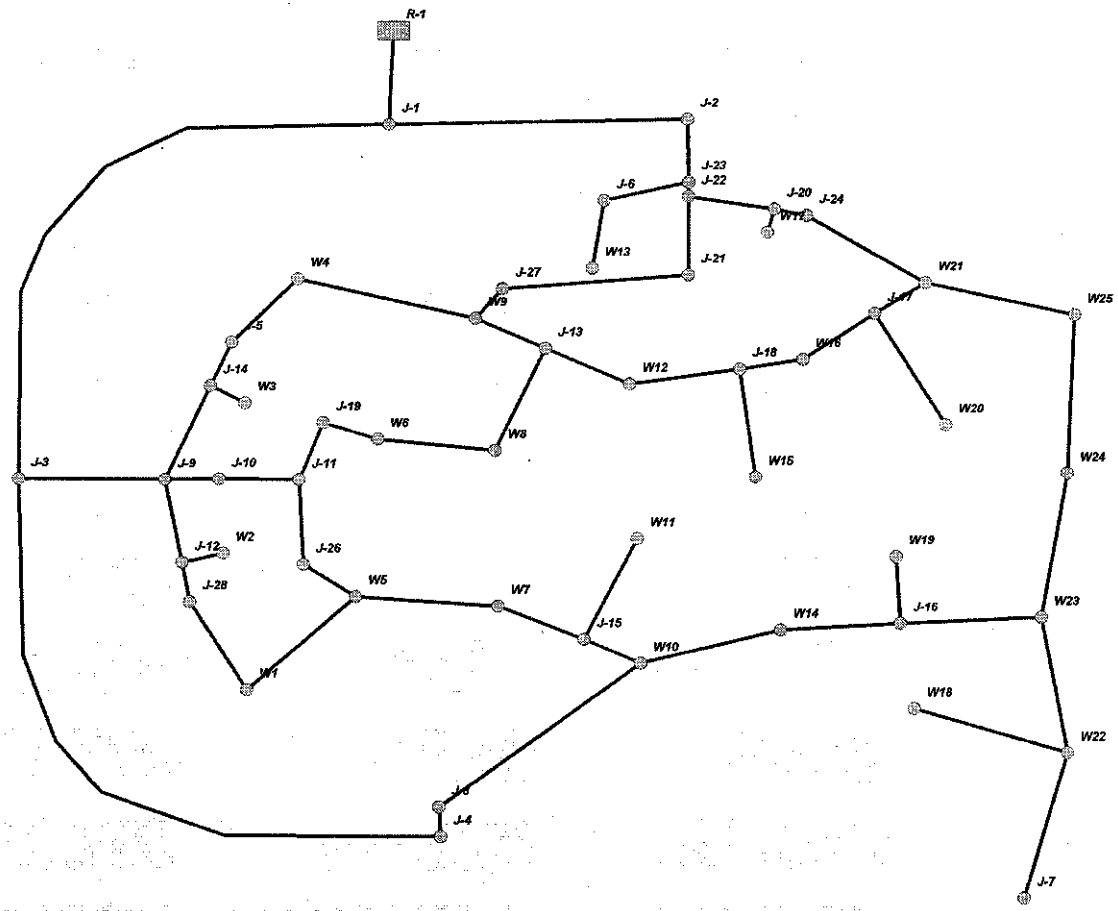

PIPE2006 KYPIPE

0 300

LFGTE Project - Calculation of Slopes (GCS Laterals)

START JUNCTION	START INVERT	END JUNCTION	END INVERT	LENGTH	SLOPE (%)
J-7	2008	W22	2053	194	23
W22	2053	W23	2098	176	26
W22	2053	W18	2061	201	4
W23	2098	W14	2092	328	2
J-16	2092	W19	2109	86	20
W14	2092	W10	2086	182	3
W10	2086	J-8	2028	313	19
J-8	2028	J-4	2014	37	38
W10	2086	J-15	2093	78	9
J-15	2093	W11	2110	145	12
J-15	2093	W7	2101	115	7
W7	2101	W5	2096	180	3
W5	2096	J-26	2080	77	21
J-26	2080	J-11	2074	108	6
J-11	2074	J-19	2078	79	5
W5	2096	W1	2058	182	21
J-19	2078	W6	2098	72	28
W6	2098	W8	2110	148	8
W8	2110	J-13	2086	144	17
J-13	2086	W9	2077	95	9
W9	2077	W4	2059	229	8
W4	2059	J-5	2048	116	9
J-5	2048	J-14	2044	62	6
J-14	2044	W3	2054	49	20
J-14	2044	J-9	2035	132	7
J-9	2035	J-10	2052	68	25
J-10	2052	J-11	2074	101	22
J-3	1987	J-9	2035	184	26
J-9	2035	J-12	2044	108	8
J-12	2044	W2	2056	53	23
J-12	2044	J-28	2047	51	6
J-28	2047	W1	2058	133	8
J-15	2093	W11	2110	145	12
J-13	2086	W12	2098	115	10
W12	2098	J-18	2086	140	9
J-18	2086	W15	2110	139	17
J-18	2086	W16	2082	81	5
W16	2082	J-17	2065	108	16
J-17	2065	W21	2056	75	12
J-17	2065	W20	2106	167	25
W9	2077	J-27	2066	50	22
J-27	2066	J-21	2054	234	5
J-21	2054	J-22	2028	100	26
J-22	2028	J-23	2024	18	22
J-6	2032	J-23	2024	109	7
W13	2055	J-6	2032	88	26
J23	2024	J-2	2006	80	23
J-1	2025	J-2	2006	375	5
R-1	2020	J-1	2025	119	4
J-22	2028	J-20	2033	110	5
W17	2041	J-20	2033	31	26
J-20	2033	J-24	2036	42	7
J-24	2036	W21	2056	172	12
W21	2056	W25	2065	192	5
W25	2065	W24	2104	202	19
W24	2104	W23	2098	187	3

APPROVAL

COSTUMERS SIGNATURE: _____

DATE: _____

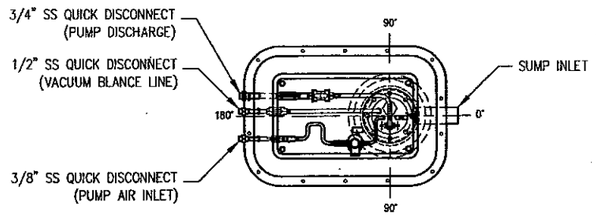

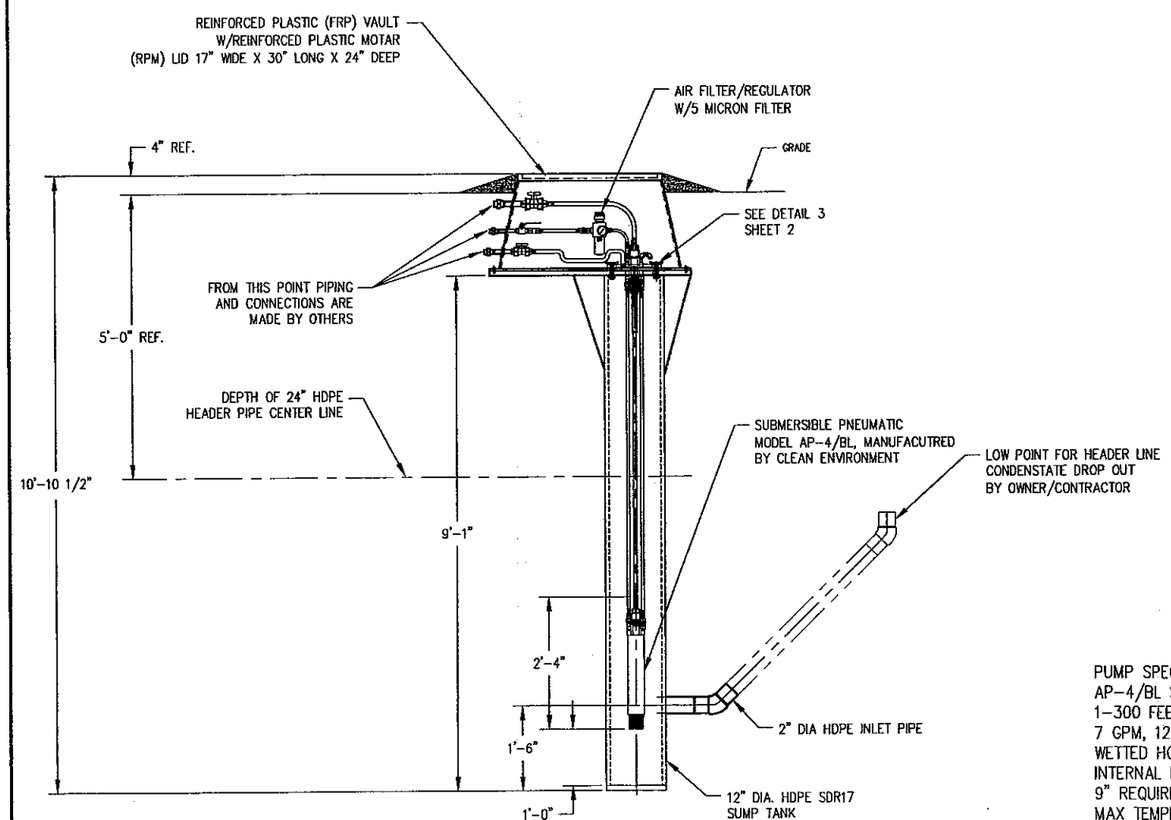

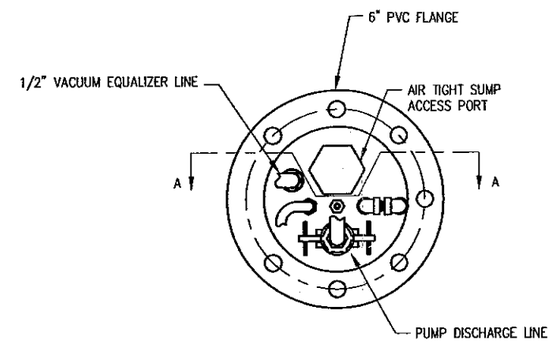

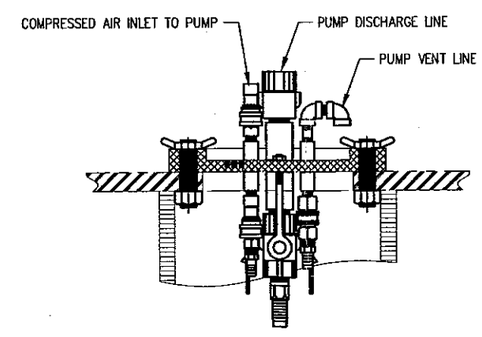

DETAIL 3

SCALE 2X

PUMP SPECIFICATIONS:
AP-4/BL SHORT AUTO PUMP BOTTOM LOADING
1-300 FEET OF HEAD WITH A 11.5" DRAWDOWN LEVEL
7 GPM, 120 PSIG MAXIMIM INLET AIR PRESSURE
WETTED HOUSING IS STAINLESS STEEL,
INTERNAL PNEUMATIC LEVEL CONTROL, NORMALLY CLOSED,
9" REQUIRED DIFFERENTIAL, PRESSURE RANGE 40-100 PSIG,
MAX TEMPERATURE 150 DEG F, CHECK VALVE AT
BOTTOM ALLOWS LIQUID TO ONLY FLOW INTO PUMP

Shaw® LFG Specialties, LLC.

REV	DESCRIPTION / ISSUE	DATE	BY
0	RELEASED FOR APPROVAL	2/25/05	KZM

THIS DRAWING REPRESENTS INTELLECTUAL PROPERTY OF LFG SPECIALTIES, L.L.C. ANY MODIFICATION TO THE ORIGINAL BY OTHER THAN LFG SPECIALTIES, L.L.C. PERSONNEL VIOLATES ITS ORIGINAL PURPOSE AND AS SUCH IS RENDERED VOID. LFG SPECIALTIES, L.L.C. WILL NOT BE HELD LIABLE FOR ANY CHANGES MADE TO THIS DOCUMENT WITHOUT THE EXPRESS WRITTEN CONSENT OF THE ORIGINATOR.

PNEU-PUMP
12" DIA.

DRAWN BY:	ENGINEER:	APPROVED BY:	SIZE:
K.Z. MASON	KZM	KZM	D
SCALE: 3/4"=1'-0"	DATE: 2-23-05	PROJECT NO: 114633	

PROJECT NAME: CONDENSATE TRANSFER SUMP SYSTEM
SUBMERSIBLE SUMP
AIR OPERATED

CUSTOMER	SERIAL NO:	DWG NO:	SHT:	REV:
BUNCOMBE CO LANDFILL (PHASE II)	9019	SUMPA	1	0

File: K:\KEVIN MASON\BUNCOMBE COUNTY\PHASE 2 (THALLE)\9019-SUMPA.dwg Layout: Model User: Kevin.Mason Feb 25, 2005 - 10:46am

Attachment 3

Generator Set Specification

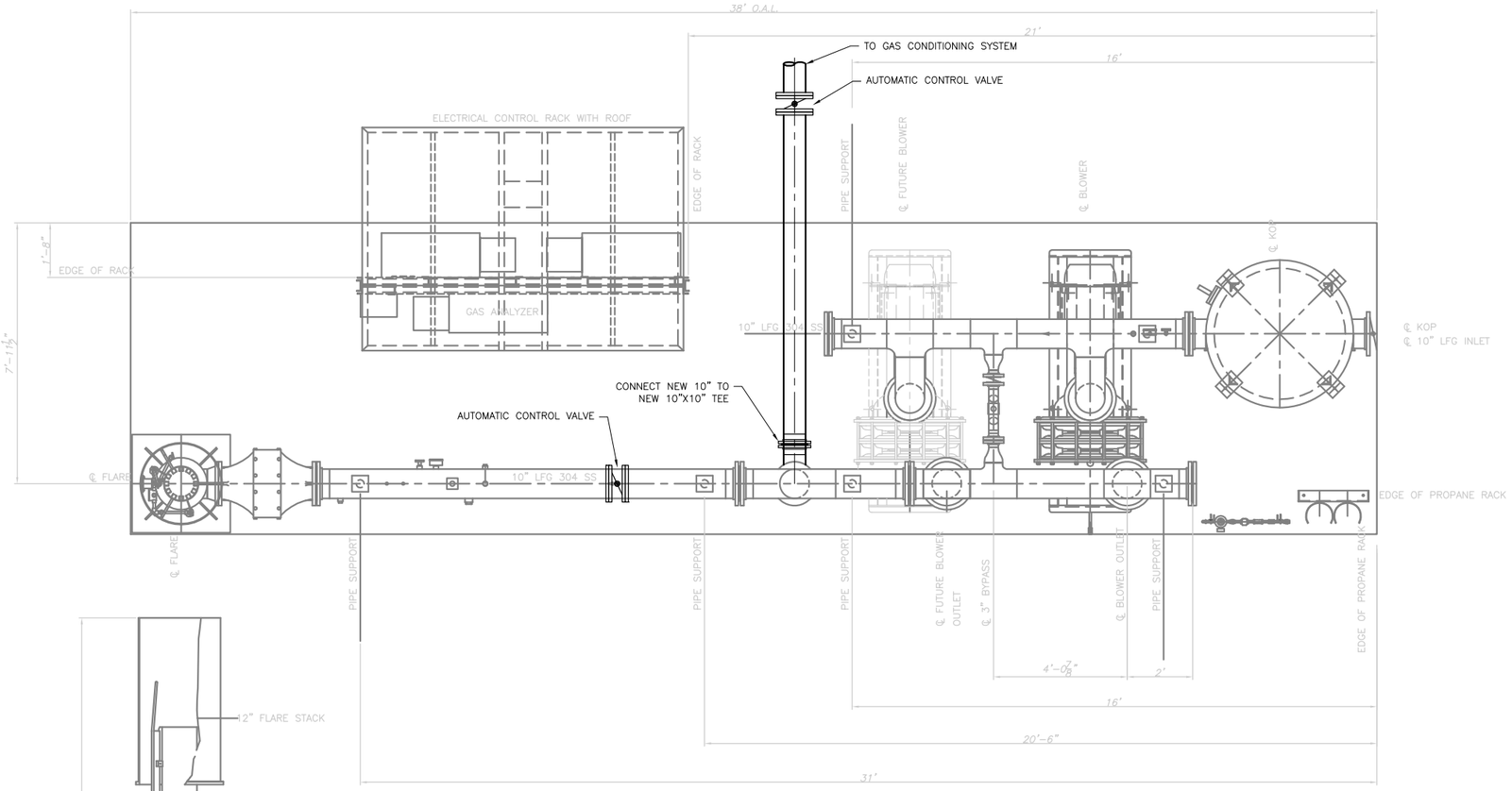

FLARE STATION

PLAN

1/2" = 1'-0"

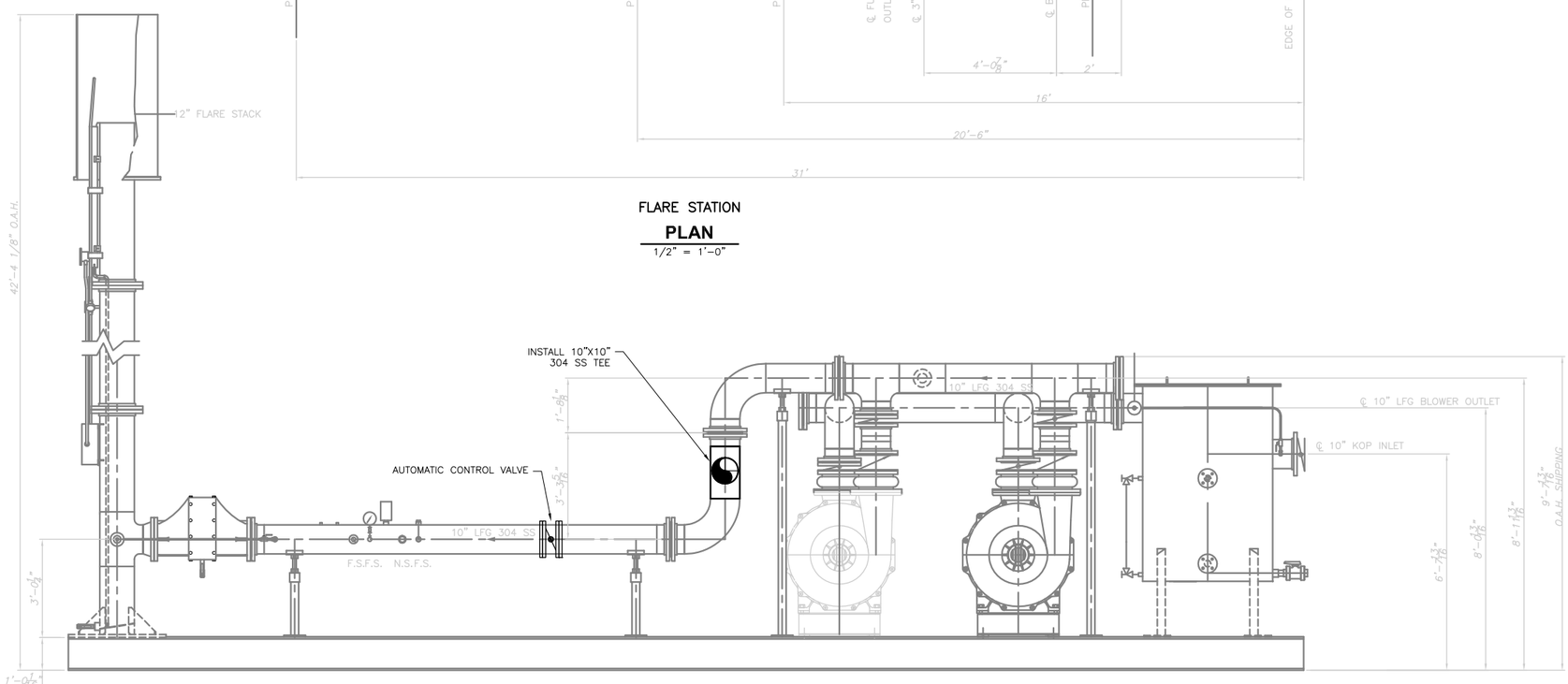

FLARE STATION

ELEVATION

1/2" = 1'-0"

1/2" = 1'- 0"

1 0 1 2

REV. NO.	DATE	DRWN	CHKD	REMARKS

DESIGNED BY: K YANG
DRAWN BY: M KOSKI
SHEET CHK'D BY: K YANG
CROSS CHK'D BY: C GABEL
APPROVED BY: M BRINCHEK
DATE: APRIL 2009

CDM
Camp Dresser & McKee
Carolina Corporate Center
5400 Glenwood Avenue, Suite 300
Raleigh, North Carolina 27612
Tel: (919) 787-5620 Fax: (919) 781-5730
consulting • engineering • construction • operations

BUNCOMBE COUNTY, NORTH CAROLINA
BUNCOMBE COUNTY SOLID WASTE MANAGEMENT FACILITY
LANDFILL WASTEWATER PRE-TREATMENT SYSTEM
LANDFILL GAS-TO-ENERGY PROJECT

FLARE STATION CONNECTION DETAIL

PROJECT NO. 6447-64253
FILE NAME: D-2.DWG
SHEET NO.
D-2

FINAL DRAWING - NOT RELEASED FOR CONSTRUCTION

C:\CAD\Buncombe\dwg\ D-1 03/10/09 13:52 Koskiar XREFS: BASE, 2008 COMPOSITE, NEW-PIPE-REVCG_CONF, CDM_2436

SECTION 11399

LANDFILL GAS ENGINE DRIVEN GENERATOR

PART 1 GENERAL

1.01 SCOPE OF WORK

A. Furnish all labor, materials, equipment, and incidentals, and install, place in operation, and field test one spark ignited engine driven generator unit arranged for low BTU gas fuel from a landfill, housed in a weatherproof, walk-in, sound attenuating aluminum enclosure and including required supporting systems for the Buncombe County, NC Landfill as shown on the Drawings and as specified herein.

B. The unit shall have a continuous duty power rating (site rated) of approximately 1562.5 kVA 1250 kW at 80 percent lagging power factor with 480 Volt, 60 Hertz, three phase output. The alternator shall be four wire, neutral grounded, complete with excitation system and controls. Mount the unit on a steel sub-base with spring type vibration isolators and include all essential and desirable appurtenances whether specifically mentioned in this specification or not.

C. Arrange the unit for automatic starting and stopping and load transfer for parallel operation with the utility power through soft loading closed transition.

D. All equipment and controls specified in this Section shall be new and be considered part of the engine generator package. The engine generator manufacturer or his/her licensee shall be responsible for furnishing the generator package in its entirety as specified herein. External wiring connections to the engine generator set shall be furnished and installed under Division 16. External piping connections to the engine generator set shall be furnished and installed under Division 2. The engine generator package shall be complete in all respects and shall include all equipment and controls necessary for a fully operational continuous duty power supply operating in parallel with the utility.

E. Furnish equipment under this Section including, but not limited to the following:

1. Landfill gas fueled, spark ignited engine and attached alternator

2. Unit mounted radiator with engine driven fan, for cooling of the engine jacket water, lubricating oil cooler, and aftercooler, including engine mounted and engine driven circulating pump(s).

3. Exhaust silencer and engine exhaust flexible connection.

4. Fuel system appurtenances including secondary fuel pressure regulator, flexible fuel supply connection, and solenoid valve for landfill gas fuel supply.

5. Skid mounted, factory piping, wiring and valves.

6. Combination engine/alternator control panel wired, tested and wall mounted within the enclosure.

7. Engine mounted electric starter with batteries and battery charger.

8. Generator structural skid base with spring type vibration isolators.

9. Generator main circuit breaker

10. Walk-in, weatherproof sound attenuating aluminum enclosure for outdoor installation of the generator unit, incorporating a circuit breaker lighting panelboard for interior electrical loads, and lighting and receptacles.

F. Provide services of the manufacturer's representative during installation, start-up, testing, and training, and for preventive maintenance service contract as specified herein.

1.02 RELATED WORK

A. Field piping for landfill gas fuel is included in Division 2.

B. The concrete foundation is included in Division 3.

C. Gas conditioning system is included in Division 11.

D. Load transfer switching, wiring and connections are included in Division 16

1.03 SUBMITTALS

A. Submit, in accordance with Section 01300, shop drawings and product data to establish compliance with this Section. Submittals shall include the following:

1. Shop drawings, catalog cuts, brochures, and other materials required to completely describe the systems and equipment being furnished.

2. Complete assembly drawings with identification, description and dimensions for each separately installed sub-assembly or piece of equipment.

3. Supporting structure drawings showing the size and location of anchor bolts, selection and location of spring type vibration isolators, and horizontal and vertical reactions in kips at each support location.

4. Performance specifications of all items of equipment.

5. Control panel layout drawings showing location, interior and exterior views, dimensions, paint finish specifications and component bill of materials.

6. Complete electrical, instrumentation, control and wiring diagrams.

7. Complete identification of all wiring connections to external systems and equipment, including numbered terminal strip identification.

8. Complete details of the main generator circuit breaker showing location, dimensions, ratings, and enclosure details.

9. The size, attenuation curve, and design back pressure for the silencing equipment as offered to accomplish the specified silencing for this installation.

10. Complete details of the engine mounted radiator cooling system.

11. Detailed information on the proposed jacket water treatment.

12. Complete details of the proposed battery charger and starting battery(ies), including cold cranking amps and ampere hour rating.

13. Alternator rating data sheet showing the alternator output rating, efficiency, and temperature rise.

14. Certification that the torsional mass-elastic analysis specified herein has been performed.

15. Certification of prototype testing of the unit.

16. Statement of certification of engine emissions in conformance with the applicable EPA Emissions Tier Designation in effect at the time of receipt of bids.

17. Detailed description of the weatherprotected, sound attenuating enclosure, including dimensions, materials of construction, methods of construction and standards, description of all accessories and components, color selection charts of available colors, and circuit diagrams.

18. Statement of certification signed by a Registered Professional Engineer or Registered Architect of the State of North Carolina, of enclosure conformance to the North Carolina State Building Code.

19. Sample test data sheet for the factory test to be performed and a sample field test data sheet.

20. Four copies of the manufacturer's certified shop test record of the complete engine driven generator unit. The final test record shall show the generator set performance as specified in Paragraphs 1.01 and 1.06.

21. Draft copy of the written service contract specified in Paragraph 1.05.

22. Copy of manufacturer's warranty as specified in Paragraph 1.10.

23. Detailed description of and reasons for any deviations from the specification as written.

B. Use the following format for submitting data for approval (for rated kW capacity):

1. Engine Data

   a. Manufacturer

   b. Model

   c. Number and arrangement of cylinders

d. RPM

e. Bore x stroke (in)

f. Displacement (cu in)

g. Maximum brake horsepower at rated RPM

h. Brake Mean Effective Pressure (BMEP) at rated kilowatt output (including any parasitic loads and alternator efficiency) (psi)

i. Aspiration

j. Piston speed, (fpm)

k. Make and model of governor

l. Make and model of overspeed shutdown device.

m. Maximum allowable engine exhaust back pressure (inches H_2O)

n. Engine cold cranking amps

o. Engine fuel gas minimum supply pressure (psi)

2. Alternator Data

a. Manufacturer

b. Model

c. Rated KVA

d. Rated KW

e. Voltage

f. Rated Amperes

g. Power factor

h. Temperature rise above 40 degrees C ambient

1) Stator by thermometer (degrees C)

2) Field by resistance (degrees C)

i. Class of insulation

j. Alternator efficiency including excitation losses and at 80 percent power factor

1) Full load (percent)

2) Three-quarters load (percent)

3) Half load (percent)

k. Subtransient reactance (X_d'') (per unit) or (ohms)

3. Guaranteed fuel consumption rate at generator terminals for landfill gas @ 500 BTU/cu ft

a. Full load (BTU/hr)

b. Three-quarters load (BTU/hr)

c. Half load (BTU/hr)

4. Generator unit and accessories

a. Weight of skid mounted engine-generator set (lbs)

b. Weight of complete assembled enclosure including the housing, generator, fuel tank, and silencer (lbs)

c. Overall length of engine-generator set (ft)

d. Overall length of enclosure base (ft)

e. Overall width of engine-generator set (ft)

f. Overall width of enclosure base (ft)

g. Overall height of engine-generator set (ft)

h. Overall height of enclosure (ft)

i. Exhaust pipe size (inches)

5. Engine exhaust gas emission data at rated load:

a. Temperature (degrees F)

b. Flow (ACFM)

c. Carbon Monoxide (CO) (grams/BHP-hr)

d. Nitrogen Oxides (NOx) (grams/BHP-hr)

e. Hydrocarbons (HC) (grams/BHP-hr)

6. CFM of air required for combustion based upon inlet air temperature of 40 degrees C: (CFM)

7. Engine heat rejection (BTU/min)

a. Heat rejected to enclosure by engine.

b. Heat to jacket water.

c. Heat to oil cooler

d. Heat to after cooler.

e. Heat to exhaust.

8. Coolant Data

a. Maximum jacket coolant flow rate (gpm)

b. Jacket coolant outlet temperature (deg. F)

c. Maximum allowable jacket coolant return temperature (deg. F)

d. Jacket circuit maximum allowable pressure loss external to engine (psi)

e. Maximum aftercooler coolant flow rate (gpm)

f. Aftercooler coolant outlet temperature (deg. F)

g. Maximum allowable aftercooler coolant return temperature (deg. F)

h. Aftercooler circuit maximum allowable pressure loss external to engine (psi)

9. Octave band sound power level analysis of the engine exhaust and of the engine-alternator mechanical noise with radiator fan when operating at full rated power output.

10. Alternator heat rejection (BTU/min)

11. Combustion air volume (CFM)

12. Height from bottom of skid required for removing piston with connecting rod; (also for removing cylinder liner): (ft)

13. Nominal ampere hour and cold cranking ampere rating of the starting batteries

1.04 REFERENCE STANDARDS

A. Design, manufacture and assembly of elements of the equipment herein specified shall be in accordance with but not limited to published standards of the following, as applicable.

1. American Gear Manufacturers Association (AGMA)

2. American Institute of Steel Construction (AISC)

3. American Iron and Steel Institute (AISI)

4. American National Standards Institute (ANSI)

5. American Petroleum Institute (API)

6. American Society of Mechanical Engineers (ASME)

7. American Society for Testing Materials (ASTM)

8. American Welding Society (AWS)

9. American Bearing Manufacturers Association (ABMA)

10. British Standards Institution (BS)

11. Canadian Standards Association (CSA)

12. Deutsches Institut Fuer Normung (DIN) (German Institute for Standards)

13. Factory Mutual Engineering and Research Corp. (FM)

14. Institute of Electrical and Electronics Engineers (IEEE)

15. Instrument Society of America (ISA)

16. International Standards Organization (ISO)

17. National Electrical Code (NEC)

18. National Electrical Manufacturers Association (NEMA)

19. National Fire Protection Association (NFPA)

20. Occupational Safety and Health Administration (OSHA)

21. Society of Automotive Engineers (SAE)

22. Society for Protective Coatings (SPC)

23. Underwriters Laboratories, Inc. (UL)

24. State of North Carolina Building Code

B. Where reference is made to one of the above standards, the revision in effect at the time of bid opening shall apply.

1.05 QUALITY ASSURANCE

A. The engine-generator set shall be the standard product, as modified by these specifications, of a manufacturer regularly engaged in the production of this type of equipment and having satisfactory experience in supplying units as herein specified. Build the unit from components

that have proven compatibility, reliability and are coordinated and prototype tested to operate as a unit. Design, construct, deliver, and field test the unit in accordance with the best practices and methods. The manufacturer shall maintain a permanent service organization and supply of spare parts in place at the time of the bid within 100 miles of the project site.

B. Design and build the unit in accordance with NFPA 37, Standard for Installation and Use of Stationary Combustion Engines and Gas Turbines; except as modified by these Specifications.

C. Should equipment which differs from the equipment described in this Section be offered and determined to be equal to that specified, such equipment shall be acceptable only on the basis that any revisions in the design and/or construction of the structure, piping, appurtenant equipment, electrical work, etc., required to accommodate such a substitution shall be made at no additional cost to the Owner and be as approved by the Engineer. Modifications required to accommodate product substitutions shall not extend the contract time.

D. Design and build all mechanical equipment for continuous duty service at any and all points within the specified range of operation, defined as the greatest load which can be applied 24 hours per day, seven days per week, 365 days per year except for normal maintenance, without overheating or excessive vibration or strain, and to require only that degree of maintenance generally accepted as applicable to the specific type of equipment. Design and build all parts and components for interchangeability so that replacement parts may be installed without additional fitting or machining.

E. Components of mechanical and electrical equipment shall be the products of manufacturers who can produce evidence of their ability to promptly furnish any and all interchangeable replacement parts as may be needed at any time within the expected life of the equipment.

F. The manufacturer shall have testing facilities adequate for performing the shop tests and inspections specified herein. Submit a description of the manufacturer's testing facilities.

G. Services of Manufacturer's Representative

1. Provide services of factory-trained service technicians, specifically trained on the type of equipment specified. Submit qualifications of the service technicians for approval. Man-day requirements listed are exclusive of travel time and do not relieve the Contractor of the obligation to provide sufficient service to place the equipment in satisfactory operation.

2. Installation: to assist in location of anchor bolts; setting, leveling and field erection; coordination of piping, electrical, miscellaneous utility connections: one person-day.

3. Start-up, testing and calibration: two person-days.

4. Operation and maintenance instruction: two person-days.

5. Service inspections or consultations during the first year of actual operation after acceptance, for use at the Owner’s request, and exclusive of repair, malfunction, maintenance, or other troubleshooting service calls: five person-days.

H. Provide to the Owner, at the time of acceptance of the unit, a written one year service contract for the gas engine generator and support systems as furnished, commencing on the date of

acceptance of the unit. All costs associated with the service contract shall be included in the price bid. Furnish a copy of this contract to the Owner at the time of acceptance of the generator. This service contract does not supersede or replace the manufacturer's equipment warranty as specified herein.

1. The contract shall include inspections of the installation and performance of the manufacturer's recommended preventive maintenance at the service intervals recommended by the equipment manufacturer to maintain provisions of the equipment warranty and assure the safe and dependable operation of the generator throughout the first year of continuous service operation.

2. The preventive maintenance shall include all maintenance service at the recommended service intervals as published in the manufacturer’s literature, and as required to maintain the equipment warranty in full effect.

1.06 UNIT PERFORMANCE

A. The engine driven generator shall be guaranteed to be adequate for a continuous duty output of approximately 1250 kW, 1562.5 kVA powering induction motors. The power output of the generator will be automatically adjusted to match landfill gas production to maintain a constant pressure in the upstream gas collection system. The basis of design for the generator shall be to consume 400 scfm of landfill gas. The generator unit shall be intended for efficient operation throughout an operating range of 50 percent to 100 percent of the continuous duty rating.

B. The speed regulation from zero to full rated load shall not exceed plus or minus one half percent.

C. Under steady load conditions, from zero load to full-rated load, voltage regulation shall be within plus or minus one half percent, and frequency regulation shall be within plus or minus 0.25 percent (0.15 Hz) of their mean value for constant load from zero load to full rated load. Upon application or removal of a 44 percent load in one step, the transient voltage dip or overshoot shall not exceed 20 percent of rated voltage and recovery to steady state operation shall be within ten seconds in accordance with ISO 304611.

D. Units offered at ratings in excess of their published ratings are not acceptable and will not be approved.

1.07 DELIVERY, STORAGE AND HANDLING

A. Ship materials and equipment complete except where partial disassembly is required by transportation regulations or for protection of components.

B. All mechanical and electrical equipment shall be coated, wrapped and otherwise protected from snow, rain, drippings of any sort, dust, dirt, mud, flood and condensed water vapor during shipment and while installed in place during construction. The protective coverings shall remain in place until the work areas are substantially free of all construction dust and debris. Full details of proposed protective measures shall be submitted for approval to the Engineer prior to shipment. Alternator space heater shall be energized at all times during storage.

C. The unit shall be properly packaged for shipment and especially treated for long periods of storage before use in a temperate climate.

1.08 PROJECT/SITE REQUIREMENTS

A. House the complete generator unit for outdoor operation and include all items and equipment required for unattended automatic operation. Arrange the unit for positive and successful quick starting at 0 degrees F ambient temperature.

B. Factory assemble the complete generator unit with enclosure and all accessories as specified herein, ready for installation on a concrete foundation with available connections for electric service. The unit shall not require field assembly.

C. Install the engine driven generator unit within a walk-in type weatherproof sound attenuating enclosure for outdoor mounting. The enclosure shall have adequate provision for ventilation to limit the maximum summertime temperature within the enclosure, considering full-load engine/generator heat radiation and 104 degrees F outdoor ambient. All equipment furnished under this Section and intended for installation within the generator enclosure shall be designed for operation in an ambient temperature of 104 degrees F plus the temperature rise that will occur within the enclosure either during generator operation, or when the generator is not in operation. The altitude at the project site will not be in excess of 500 feet above sea level.

D. The heat sink for rejection of heat from the engine jacket, aftercooler, and lube oil cooler shall be a unit mounted radiator utilizing an engine mounted and engine driven fan to discharge air through the radiator and through a louver to outdoors. Design the radiator and engine fan to dissipate all required heat loads with the engine generator running at full rated output and with 104 degree F ambient outdoor air. No other source of cooling is available or will be permitted.

E. Provide electric resistance heaters for the engine jacket and alternator to maintain warmth within the equipment as an aid to starting, to minimize warm-up time, and reduce condensation within the equipment.

F. Design all structure, supports, and anchors for the generator unit for all gravity loads, dynamic loads, and seismic forces and conform to all applicable requirements of the North Carolina State Building Code.

G. The engine-generator unit within the enclosure, in combination with the engine exhaust silencer, with the engine driven generator in operation at full load, shall have a sound power level of not more than 75 dbA measured at a distance of 50 feet from the enclosure in any direction. There shall be no pure tone. It shall be the responsibility of the generator unit manufacturer to choose the engine exhaust silencer and the sound attenuating properties of the enclosure to meet these criteria.

1.09 MAINTENANCE

A. Spare Parts and Tools

1. Provide one set of all special tools that are required for the normal operation and maintenance of the engine driven generator units.

2. Provide the following spare parts:

a. Air filter elements for one complete replacement.

b. Lube oil filter elements for one complete replacement.

c. Coolant filter elements for one complete replacement.

d. Spark plugs for one complete replacement.

e. Sets of hoses and belts including one of each different size and type.

f. Three complete replacement sets of fuses of each different size and type.

g. One complete change of lube oil plus one gallon of make-up lube oil supplied in unopened containers.

h. One complete change of coolant solution for both cooling circuits supplied in unopened containers.

i. One anti-freeze test hydrometer.

j. One pilot lamp of each type and voltage.

3. The spare parts and maintenance tools shall be packed in containers, permanently labeled by word and part number for easy identification of the items and with the words "For Use Only for the Gas Engine Generator Unit" and properly packed for an extended period of storage before use.

B. Furnish complete sets of operating and maintenance instructions covering all equipment furnished to the Owner as provided in Section 01730. Prepare the instructions specifically for this installation and include all required cuts, drawings, equipment lists, descriptions, etc., that are required to instruct operating and maintenance personnel unfamiliar with such equipment. Include parts lists and parts prices current to the date of submittal, and information relevant to parts supply and ordering. Furnish this information in time for review and approval prior to start-up and site testing of the unit.

1.10 WARRANTY

A. The Contractor shall furnish a written one year warranty from the equipment supplier, written to the Owner, on all equipment furnished under this Section when operated for continuous duty. The warranty shall extend from the date of acceptance of the equipment and shall include all parts, labor, and transportation for replacing any defective components of the equipment as furnished.

PART 2 PRODUCTS

2.01 GENERAL

A. The engine-generator set shall be a factory assembled unit, specifically designed and equipped for operation on low BTU landfill gas (450-500 BTU/cu ft) and shall be as manufactured by Caterpillar, Waukesha, Jenbacher, or approved equal. The engine and alternator shall be directly connected, shall be free from injurious torsional or other vibration and shall be mounted on a heavy steel sub-base.

B. The engine and alternator shall be directly connected and shall operate at the same rotative speed. The use of gearing or other speed adjustment between the engine and the alternator, such that the engine and alternator operate at different rotative speeds will not be allowed.

C. The engine-alternator set shall be pre-piped and pre-wired insofar as possible. Separate pre-wired terminal boxes shall be provided on the engine-generator skid for A.C. and D.C. wiring. All wiring terminations for connection to field wiring shall be within terminal boxes.

D. The generator set shall be rigid, neat in appearance and shall allow easy access to all parts for maintenance purposes. All parts shall be properly enclosed to prevent the throwing or dripping of oil.

E. The complete engine-generator unit shall be free from harmful torsional or other vibration throughout the entire operating load range. The engine generator manufacturer shall make, or have made, the mass-elastic system analysis of the complete engine-generator unit, and shall submit to the Engineer certification that the analysis has been performed, showing the unit to be free from harmful torsional or other vibration.

2.02 ENGINE

A. The gas engine shall be of vee construction, sixteen cylinders, four stroke cycle, turbo-charged and aftercooled using a separate cooling circuit for cooling the aftercooler with 130 degree F water; complete with electronic spark ignition, low BTU gas fuel system carburetor, secondary gas regulator and electric solenoid fuel shutoff valve. The engine shall develop its full power output rating including alternator output, alternator efficiency, coolant circulating pump power, and other miscellaneous parasitic loads at a brake mean effective pressure (BMEP) not to exceed 233 psi. The piston speed shall not exceed 2250 FPM. The required horsepower output of the engine when operating the alternator at its nameplate output, and considering alternator efficiency, radiator fan, and other miscellaneous parasitic loads shall not exceed the manufacturer's published continuous duty rating of the engine.

B. The engine shall be provided with removable wet-type cylinder liners of close grained alloy steel, heat treated for proper hardness as required for maximum liner life. The engine block shall be a one piece stress relieved grey iron casting.

C. Intake and exhaust valves shall be heat-resisting alloy steel with high tungsten-chrome alloy steel exhaust valve seat inserts.

D. The engine shall be rigid, neat in appearance and shall allow easy access to the various parts for maintenance purposes. All parts shall be properly enclosed to prevent the throwing or dripping of oil.

E. The engine shall be lean burn type, incorporating pre-chamber combustion for maximum fuel efficiency and minimum exhaust emissions to the following maximum guaranteed limits at the site rating without external control devices:

1.	NOx:	0.6 grams/bhp/hr
2.	CO:	2.4 grams/bhp/hr
3.	Hydrocarbons	4.8 grams/bhp/hr

4. Particulates (PM10) (Total) 0.10 grams/bhp/hr

5. Maximum Brake Specific Fuel Consumption: 7200 BTU/bhp-hr

6. Maximum Gas Supply Pressure: 2 psi

2.03 EQUIPMENT

A. Engine Control

1. Control of engine fuel and spark timing shall be through an electronic engine control module to provide isochronous or droop speed control and enhanced performance from variable spark ignition timing and duration. The electronic control module shall operate on 24 volt DC power supply from the engine starting batteries. The control module shall provide idle and rated speed settings; adjustable monitoring of vital engine parameters; timing control for load and fuel quality; integrated temperature sensing for cylinder exhaust port, turbocharger inlet/outlet, average for left and right cylinder banks; and adjustable air/fuel ratio control to account for humidity and atmospheric pressure. The control shall include and oxygen sensor and detonation sensor.

2. Furnish one digital synchronizer and load share control unit for the generator, loose, to be installed in the generator switchgear as part of the work of Section 16450. The synchronizer and load share module shall perform speed and phase matching, synchronizing, paralleling, load sensing, isochronous load sharing, and speed control for the generator operating parallel with the utility power system. The control shall provide safe dead bus closure, true RMS power sensing, bumpless transfer, programmable breaker retry, adjustable ramps for loading and unloading, digital VAR or power factor control, process import/export control, digital tuning of alternator voltage output, and shall be easily programmable using a hand held programmer. The digital synchronizer and load share control shall be Woodward DSLC or equal, shall provide control to the governor controller, and shall operate on 24 volt DC power from the engine starting batteries.

3. Furnish also a separate overspeed shutdown device which shall, in case of predetermined overspeed or the operation of various protective devices as later specified, instantly stop the engine.

C. Supporting Structure

1. The gas engine and alternator shall be directly bolted, doweled and aligned on a rigid, fabricated steel base, sized to maintain the correct alignment of all system components. The base shall be made of steel I-beam or box section, braced and reinforced as required to maintain alignment between the engine and the alternator. The base shall extend under the entire length of the engine and the alternator and shall fully support each outboard end of the engine-alternator assembly. The base shall be supported by Korfund, ACE, or equal heavy duty seismic spring type vibration isolators, anchored to the base of the enclosure.

2. All exposed surfaces of the structural steel members of the fabricated base frame and isolator spring restraints shall be shop primed and finish painted in accordance with the manufacturer’s standard practice.

2.04 SYSTEMS

A. Fuel System

1. The gas engine will be connected to an on-site landfill gas supply. The gas supply shall include a 2-in diameter gas pressure gauge with a scale of 0 to 5 psig, complete with petcock, an electric (DC) solenoid operated shut-off valve, a dry fuel filter, and a flexible connector to the engine fuel supply connection. Fuel piping shall be provided under Section 02623.

2. Furnish a gas pressure secondary regulator mounted on the engine or loose for installation in the fuel supply piping. The gas pressure regulator shall accept gas pressures up to 2 psig, and shall reduce the pressure to that required by the engine at the range of fuel consumption rates required by the engine. The secondary regulator shall include a vent to outdoors.

3. Furnish a fuel supply solenoid valve mounted on the engine or loose for installation in the fuel supply piping to the engine. The fuel solenoid valve shall be a single or dual valve, as required by the engine for rapid or slow actuation for starting. The valve shall operate on 24 volts DC from the engine starting batteries.

4. Furnish a low gas pressure switch mounted downstream of the gas pressure regulator, to alarm to the generator control panel upon loss of gas pressure.

5. The fuel filter shall be for 50 micron filtering, utilizing a replaceable element type filter media.

6. All parts of the fuel system shall meet the approval of and be installed in complete compliance with all applicable local, State and Federal codes, laws and regulations.

B. Electric (Battery) Starting System

1. Provide an engine mounted, 24 volt DC, solenoid shift electric starter(s), capable of withstanding four consecutive continuous cranking periods of 15 seconds duration each separated by 15 seconds rest periods before shutting down completely and sounding the overcrank alarm.

2. The starting batteries shall be low maintenance, long life, lead acid type, especially designed for gas engine cranking service. Batteries shall be of a capacity as recommended by the battery manufacturer for cranking the engine being furnished, for the necessary break-away current, cold cranking amperes, and ampere hour capacity for four consecutive 15 seconds of cranking without being recharged, with a battery temperature of 45 degrees F and with the SAE 30 oil in the engine maintained at 60 degrees F. The batteries shall be manufactured by Delco, Exide, Caterpillar or equal.

3. Furnish and install the required battery cables with insulated terminals and connectors for connecting the batteries to the electric starter. Furnish all connectors and hardware, cables, grease, and battery lifting device.

4. Furnish a floor mounted fiberglass, fully enclosed, containment type, insulated battery box specifically designed for battery service. Furnish fully insulated battery covers. Battery

box(s), supports, and anchors shall be designed for gravity loads and seismic forces in accordance with the applicable requirements of the latest State Building Code.

5. Furnish a completely automatic battery charger for charging the batteries being supplied. The charger shall be UL listed, fully automatic, solid state, temperature compensating, float/equalize-type, designed for maximum battery service life with minimum battery maintenance. Charger shall be for 120 volt, single phase, 60 Hertz alternating current input, with voltage regulation within one percent with plus or minus ten percent fluctuations of the input voltage. Direct current output shall be not less than 20 amperes and shall be current limited at 120 percent of rated output. The charger shall have automatic voltage sensing determined by the state of the battery and reducing to milliamp current on a fully charged battery. Accessories shall include direct current ammeter and voltmeter (panel type; 2 percent accuracy), float and equalize indication, A.C. and D.C. fuses, and A.C. power indicating light. Furnish alarms including A.C. power failure, high D.C. voltage, and low D.C. voltage. Alarm conditions shall have individual indicator lights on the face of the charger panel and shall operate a common alarm relay for remote transmission of alarm. Alarm wiring will run directly to the SCADA system and will not require an annunciator point in the generator control panel. The charger shall be LaMarche, Sens, Nife, or equal. The battery charger shall provide control power to the generator control panel when the generator is not running, with the correct voltage and current output to provide proper battery charge rate for maximum battery life and control panel power requirements. Arrange the battery charger for wall mounting.

6. Furnish an engine driven battery charging alternator to charge the starting batteries and provide all power requirements of the engine, control panel, and engine mounted auxiliaries during engine operation.

C. Air Intake System

1. Provide dry type combustion air intake filter(s) on the engine to protect working parts of the engine from dirt and grit. Filter(s) shall be heavy duty, two stage with replaceable type filter elements and service indicators.

D. Lubrication System

1. Provide a full pressure lubricating oil system arranged to lubricate and cool the pistons and to distribute oil to all moving parts of the engine including the turbocharger bearings. Provide a sump type crankcase arrangement of sufficient capacity to suit the requirements of the engine, equipped with an easily accessible valved oil drain outlet.

   a. The lubrication system shall include full flow oil filters of the replaceable element type, easily accessible for removal and replacement. Provide a spring loaded by-pass valve on the filters as an insurance against stopping of lubricating oil circulation in the event the filters become clogged. Provide a shell and tube type oil cooler with an automatic temperature regulating valve. Mount the oil filtration and cooling system on the engine skid. Furnish flexible pipe connections for all piping connections (cooling water and oil) between the engine and the oil cooler heat exchanger.

   b. Provide an engine driven lubricating oil circulating pump. The pump shall be of the positive displacement type and shall have ample capacity to circulate the amount of

lubricating oil and cooling oil required by the engine and turbocharger. Furnish a pressure relief valve on the pump discharge.

2. Provide a crankcase breather with crankcase emission control filter and crankcase pressure regulator to control crankcase emissions. Filtered contaminants shall be collected in a reservoir. The crankcase exhaust gases shall be piped to the induction air inlet, to the exhaust, or to outdoors. The manufacturer shall design and supply the various equipment required to perform the venting operation including (if required) washable/replaceable filter, pressure relief valve, electric motor driven vacuum pump, throttling valve etc. All components shall be factory installed.

3. All drains and vents shall be with Schedule 40 black steel pipe and threaded fittings. Provide flexible connectors at all connections of off-skid piping to the engine.

4. The engine shall be furnished with a float operated oil level controller. Furnish a skid mounted 30 gallon oil storage tank, installed in such a position that it will maintain a constant crankcase oil level as recommended by the engine manufacturer. The oil storage tank shall include a sight gauge on the side of the tank to visually indicate the oil level. The flow meter shall be a positive displacement type and shall indicate the oil delivered to the engine by the level regulator. The meter accuracy shall be within one percent of indicated flow. The meter shall have a counter with a totalizing register indicating up to 99,999 gallons in one gallon increments. Oil shall be supplied by gravity to the flow meter and level regulator from the oil supply tank. Provide for bypassing the flow meter and level regulator for filling the engine crankcase from the oil supply tank during oil changes. Furnish a low oil level switch to alarm to the generator control panel with Form C contacts rated 5 amperes at 120 volts.

5. Provide a low oil level switch on the engine crankcase to detect low oil level and activate an alarm in the generator control panel. Set the alarm level to provide engine protection prior to loss of oil pressure.

E. Engine Cooling System

1. The engine shall be radiator cooled utilizing a unit mounted radiator and engine driven fan. The fan and radiator shall be adequate for cooling the unit at full rated load with an outdoor ambient temperature of 104 degrees F, and with the temperature rise inside the enclosure corresponding to the heat given off by the alternator and equipment hot surfaces. A pressurized radiator cap, if used, shall be rated for not more than 6 psi on the cooling system. The radiator shall incorporate flanges for attachment to the exhaust damper. The engine shall utilize two cooling circuits, one for the jacket water and oil cooler, and the second for the aftercooler, which shall connect to separate core segments of the unit mounted radiator. Alternatively, and air-to-air heat exchanger may be located in front of the engine driven fan to serve the aftercooler. The separate cooling circuits shall allow the return coolant for the aftercooler circuit to be cooled sufficiently for control of engine emissions. Provide a low coolant level switch in the radiator top tank for the jacket water circuit, wired to the low coolant alarm on the generator control panel.

2. A blower or pusher type fan mechanically driven by the engine shall cool the radiator. The fan shall provide a static pressure rise of not less than 0.5-in of water in addition to the losses through the radiator, to move the required air flow through the intake louver and

damper, discharge plenum and louver to provide the cooling required by the unit. Provide guards for fan and belts in accordance with OSHA regulations.

3. Furnish an engine driven, centrifugal jacket water pump and an auxiliary aftercooler water pump, equipped with mechanical seals and capable of circulating the required amounts of coolant through the engine jacket, oil cooler, aftercooler and radiator circuits and circuit piping. The pumps shall be direct driven by the engine, or the auxiliary water pump may be belt driven off the engine crank shaft extension. Furnish provision for belt tensioning and alignment, and guards in accordance with OSHA. Provide automatic temperature regulating valves for the coolant circuits to maintain a pre-set temperature without restricting the rates of flow through the engine.

4. Coolant shall be for use in ambient temperatures that may range from 0 to 104 degrees F, and shall be a pre-mixed 50 percent ethylene glycol antifreeze solution. The coolant shall contain additives as recommended by the engine manufacturer for the prevention of both scale formation and corrosion in the engine water jackets and cooling system components that are in contact with the engine coolant. Coolant with additives shall be as manufactured by the NALCO Chemical Company; Dow Chemical; Aqua Laboratory, or equal. Submit detailed information on the proposed jacket water treatment to the Engineer.

5. Provide thermostatically controlled heater(s) for the engine jacket water system to maintain not less than 90 degrees F in the engine jacket water to assure quick start and load transfer with an ambient temperature of minus 10 degrees F. Each heater shall include valves on the coolant inlet and outlet connections, or other means to isolate the heater for servicing of the heating elements, without the need to drain the engine cooling system. Power supply to the heaters shall be 208 Volt, single phase. Each heater shall include a manual switch to disconnect the heater when not required. Wire the heater to receive its energy from the load center furnished in the generator enclosure. Furnish a relay within the generator control panel, actuated by the engine start contact to disconnect the heater when the engine is started. Heaters shall have a total rating of not less than 10000 watts.

6. Provide a valved drain on the cooling system, piped to the exterior of the enclosure for easy access to drain the cooling system. Drain shall be with Schedule 40 black steel pipe and threaded fittings. Provide flexible connectors at the connection of off-skid piping to the engine.

F. Exhaust System

1. The exhaust silencer shall be as manufactured by Maxim; Donaldson; Nelson, or equal, of aluminized steel construction, and mounted and piped inside the enclosure. The silencer shall be of aluminized steel and shall be mounted and piped inside the enclosure. The silencer shall be of at least critical grade. The silencer shall attenuate the sum of the octave band levels converted to A-weighted sound pressure levels such that the noise level from the engine exhaust plus mechanical noise from the enclosure will conform to the noise limitation specified in Paragraph 1.08. There shall be no puretone. The engine supplier shall size the silencer to operate within the maximum allowable backpressure of the engine, when installed in the exhaust piping system as furnished. The silencer shall incorporate a threaded drain tap at its low point. Provide a Schedule 40 black steel drain pipe connection from the silencer drain tap to a valved drain outlet to the exterior of the enclosure.

2. Furnish a Type 321 stainless steel bellows type exhaust expansion joint to connect the exhaust piping/silencer to the engine. The expansion joint shall be as recommended by the engine manufacturer for the maximum operating temperature of the exhaust, engine vibration, and for expansion of the exhaust system caused by a 1000 deg. F temperature change. The expansion joint shall adapt to the engine exhaust outlet connection, and shall provide a flanged connection to the exhaust piping.

3. Exhaust pipe within the enclosure shall be ASTM A106, Schedule 40 black steel with flanged and welded fittings. Exhaust pipe shall be of the size recommended by the engine manufacturer. All exhaust line elbows shall be long radius.

4. The roof penetration through the enclosure shall be with an insulated Type 321 stainless steel or aluminum roof jack designed to accommodate the specified exhaust pipe and allow a minimum 1 inch air gap between the exhaust pipe and the roof thimble. There shall be no heat conduction path between the exhaust pipe and the roof. The roof thimble shall project above the finished roof and shall include Type 321 stainless steel or aluminum exterior rain flashing. Roof jack shall be as manufactured by GT Exhaust Systems or equal. The open space between the exhaust pipe and the roof jack shall allow for ventilation and shall include screening or mesh to prevent the entrance of insects.

5. Cover the interior exhaust system, including the flexible section and the exhaust silencer with insulation of a non-combustible type, of adequate insulating capability to limit the heat given off by the exhaust system within the enclosure and limit the temperature rise within the enclosure to that required by the engine combustion air and cooling air system. The insulation shall be insulating blanket, consisting of high density fiberglass insulation, 11 pounds per cubic foot, rated to 1200 degrees F, totally encapsulated in Type 304 stainless steel mesh. The exterior shall have a weather barrier of silicone rubber coated fiberglass cloth. Wrap the blanket around the exhaust pipe and secure with Type 304 stainless steel clips and wire. The insulation blanket shall meet the following standard specifications: MIL-I-16411E-Type II, NRC 136, U.S. Coast Guard Certificate No. 164.009/94/0, UL 492 (self-extinguishing), and NFPA A 255. Provide complete external insulation coverage of silencers even if the silencers contain interior insulation.

6. The exterior portion of the exhaust pipe shall extend vertically to a vertical open discharge. The exhaust outlet shall be not less than one half the overall height of the enclosure, and not less than ten feet above the enclosure roof. The vertical exhaust pipe shall include the pipe itself, and a rain collar extension to the outlet.

   a. Exterior exhaust pipe shall be high-temperature stainless steel, ASTM A358, Type 321, Class 2, welded, shop fabricated, of Schedule 10S wall thickness. Size shall be as required for the engine.

   b. Assemblies of pipe and fittings shall be shop fabricated with welded joints, and shall be field joined by flange joints. Field welding of stainless steel exhaust pipe will not be allowed. Flange pattern shall be ANSI B16.1, 125 lbs. Flanges shall have stub ends or rolled angle rings, of the same stainless steel as the pipeline, welded to the pipe end and shall utilize stainless steel back-up rings and Type 316 stainless steel bolts. Where the pipe stub is to pass through a sleeve during installation, a split-type back up flange shall be used. Flange gaskets shall be suitable for operating temperatures to 1200 degrees F.

c. Fabricate the exhaust outlet utilizing a pipe one pipe size larger than the exhaust pipe as a rain collar. The top outlet of the rain collar shall be set at the elevation above the enclosure roof as specified herein. The rain collar shall extend at least four pipe diameters (of the exhaust pipe) above the end of the exhaust pipe, and shall overlap the top of the exhaust pipe by 12-in. Weld the rain collar to the exhaust pipe using spacers of the same material as the pipe to allow an opening for the rain collar to drain on the outside of the exhaust pipe.

d. Support the exterior exhaust pipe extension on the structure of the enclosure. Provide bracing or cable stays as required to assure stability of the exhaust pipe outlet with a wind load of up to 115 mph. All bracing, cable stays, hardware, and fittings shall be of stainless steel.

7. The entire installation shall meet with the Engineer's approval. It is the intent of this specification to provide complete compliance with all applicable local, State and Federal codes, laws and regulations.

2.05 ENGINE INSTRUMENTATION AND CONTROLS

A. The generator set shall include a combination engine-alternator control panel, shock mounted at the alternator end of the unit. The control panel shall be all electronic type, with alpha-numeric and digital displays visible in any lighting condition. House the control panel in a unit-mounted NEMA 1 enclosure. Panel construction shall conform to UL 508 for industrial control panels. Provide all interconnecting wiring between the engine-alternator set and the control panel. Direct communication with the control panel shall be with an environmentally sealed membrane keypad. If the control panel adjustment and diagnostics are accomplished by an interconnection to a PC, furnish with the generator all software, instructions, and interconnecting cables required for PC communication with the control panel. The control panel shall be oriented for easy viewing when entering the generator room.

1. The panel shall include, but not be limited to, the following indications:

a. Lubricating oil pressure.

b. Jacket water and aftercooler water temperature.

c. Lubricating oil temperature

d. A.C. volts 0.5 percent accuracy (line to line and line to neutral).

e. A.C. amperes 0.5 percent accuracy (total and per phase).

f. Frequency, 0.5 percent accuracy.

g. Output kilowatts (total and per phase)

h. Power factor

i. Elapsed time meter calibrated in hours and tenths of hours.

j. DC volts

k. Tachometer

l. Diagnostics for servicing

m. Emergency shutdown condition indication lamps for each shutdown condition with logic to maintain lockout condition and fault light until reset.

2. Operators on the panel shall include:

a. Emergency stop mushroom type push button

b. RUN-OFF-AUTO selector switch

c. Phase selector switch

d. Voltage control

e. Lamp test pushbutton

f. Alarm acknowledge pushbutton

3. The panel shall also include:

a. Three current transformers.

b. Generator voltage regulator, digital type, adjustable, volts per Hertz.

c. Governor controller

d. Engine control module

B. The control panel shall include a complete automatic engine start control which operates on closing contact and stop control which operates on opening contact.

1. The engine control module shall provide automatic cyclic cranking for a total of at least four 15 second cranking periods separated by 15 second rest periods. If the engine fails to start after the last cranking cycle, the cranking limiter shall terminate further cranking and activate the overcrank alarm.

2. The generator controls shall include a three-position switch with the following positions: RUN-OFF-AUTO. In RUN, the engine shall start and run with load transfer controlled from a remote location; in OFF, the engine shall stop and shall not start; in AUTO, the engine shall start, run and stop from remote signals and with load transfer controlled by the automatic transfer switch furnished under Division 16 when the unit attains rated voltage and frequency.

3. The generator controls shall include an automatic cool-down timer, to allow the engine to continue to operate after load transfer back to the normal power supply, to cool down prior to automatic shut-down. The timer shall be adjustable from 0 to 10 minutes and shall be engaged when the selector switch is in the AUTO position.

C. The control panel shall include an emergency stop pushbutton, and the controls shall be arranged to accept operation of a remote contact to provide for emergency stop. Emergency stop shall over-ride all other controls to immediately shut off the fuel supply and stop the engine. Furnish loose, for installation outside of the Generator Room, a remote emergency stop switch housed in a NEMA 4 wall mount enclosure, permanently labeled as “Generator Emergency Stop”.

D. Provide automatic shutdowns with fault indication for the following conditions:

1. High jacket water temperature
2. High aftercooler water temperature (or high intake manifold air temperature)
3. Low lubricating oil pressure
4. High lubricating oil temperature
5. Engine overspeed
6. Overcrank
7. Fail to crank
8. Over voltage
9. Under voltage
10. Under frequency

E. The controls shall include automatic pre-alarms for the following conditions with fault indication for each:

1. Low coolant temperature
2. Low oil pressure warning
3. High coolant temperature warning
4. Switch not in AUTO position.
5. Low battery voltage
6. High battery voltage

F. The control panel shall include an audible alarm horn to signal any of the alarm shut down or pre-alarm conditions. Alarms shall not reset and the alarm horn shall not shut off until manually acknowledged, and fault lights shall not reset until the fault is resolved. Provide lamp test pushbutton and alarm acknowledge pushbutton. Furnish a remote alarm horn, housed in a NEMA 4 enclosure, loose for remote installation under Division 16. The alarm horn shall operate on battery voltage. Provide contacts within the control panel to provide operating

voltage to the remote alarm horn. Provide alarm acknowledge pushbutton on the remote alarm horn unit.

G. The control panel shall include one normally open and one normally closed electrical relay contact, rated 120 volts, 2 amps, A.C. for operation of a remote alarm on activation of any one or more of the pre-alarm conditions listed above, and shall include one normally open and one normally closed electrical relay contact, rated 120 volts, 2 amps, for operation of a remote alarm on activation of any one or more of the shut-down conditions listed above.

H. The control panel shall include three normally open and three normally closed electrical relay contacts, rated 120 volts, 2 amps, A.C., for operation of combustion air and ventilation air dampers within the generator room upon activation of the starting sequence of the engine, and to provide a generator run signal to the automatic transfer switch and the instrumentation system. Provide contacts rated for operation of the jacket water heater and alternator space heater, to deactivate the heaters upon activation of the starting sequence of the engine.

I. The controls shall incorporate a means to positively disable and lock out the generator from starting during maintenance. This provision shall take the form of a lockable battery disconnect switch, a lockable disconnect switch on the battery cable to the starter, a lockable stop switch on the control panel, or a lockable switch on the starter solenoid power supply.

J. The control panel shall include provision for remote status monitoring by the SCADA system. Furnish a communication module in the generator control panel to provide remote monitoring of all status and alarms, and all gauge readings (panel indications) as listed above. The communication module shall provide for remote PLC monitoring of all “real time” engine and generator parameters, remote monitoring of all alarms, shutdowns, and diagnostic codes, remote start/stop control, remote fault set, remote control of low/high idle relay and fault relay, and cool down timer override. The communication module shall communicate to the SCADA system via data link utilizing an RS 485 cable. Furnish software for programming of the SCADA system to accept the protocol from the communication module. If necessary to match up to the SCADA system, furnish a protocol converter translator loose for mounting under Division 13, to provide Modbus RTU protocol.

K. Arrange the generator control panel for the following field wiring connections. Provide numbered terminal strip connections for each.

1. Remote start/stop dry contact closure input from the automatic transfer switch(es) – battery voltage pair

2. Remote emergency stop dry contact open input from the remote emergency stop station – battery voltage pair

3. Engine run – three dry contact open/close output for remote connection - 120 volt pair

4. Generator shut-down alarm – dry contact open/close output for remote connection - 120 volt pair

5. Generator trouble alarm – dry contact open/close output for remote connection – 120 volt pair

6. Remote generator trouble/shut-down alarm – battery voltage pair output to remote audible alarm unit

7. Data link communications

2.06 ALTERNATOR AND EXCITATION SYSTEM

A. The alternator shall be of the open drip-proof bracket type, especially designed for connection to the engine and shall be for the voltage, frequency, and power output as specified in Paragraphs 1.01 and 1.06, for the rating specified in Paragraph 1.06. The alternator shall have Class H insulation. Alternator temperature rise at full continuous load operation shall not exceed 80 degrees C. The alternator shall have Amortiser windings.

B. The alternator shall be by Caterpillar; Kato; Marathon Electric Company, or equal. It shall have a forged or cast alloy steel flanged shaft for direct connection through a flywheel type coupling to the engine, or shall have an adapter and disc coupling, and shall be of the single bearing type with anti-friction bearing.

C. The alternator windings shall be braced to withstand any possible short circuit stresses and shall be designed to withstand overheating or stresses caused by harmonics generated by the variable frequency drives. The unit shall be "Radio Interference Proof" (RIP) and the "Telephone Influence Factor" (TIF) shall be within the limits of Section 9, ANSI C50.12.

D. The alternator shall be brushless with a rotating permanent magnet generator type exciter system with Class H insulation and temperature rise not to exceed 80 degrees C.

E. The voltage regulator shall be three phase solid state microprocessor based digital (Volts/Hz) with RFI filters and associated controls. The voltage regulator shall provide regulation within 0.25 percent no load to full load, with temperature drift of not more than 0.5 percent. The regulator shall provide true three phase sensing, and shall maintain precise control of the alternator output with up to 20 percent harmonic distortion in the output voltage. The voltage regulator shall accept external input for automatic voltage control to match utility voltage from the digital synchronizer and load control module. The voltage regulator shall provide for manual voltage adjustment of a minimum of plus or minus 5 percent from rated voltage while the unit is in operation.

F. The alternator stator core shall be built of low carbon steel laminations, precision-punched, deburred and individually insulated. Stator coils shall be form wound and inserted in insulated core slots. Wound core shall be vacuum impregnated with fungus resistant thermosetting synthetic varnish and baked for maximum moisture resistance, high dielectric strength and high bonding qualities. Armature lamination followers and frame ribs shall be welded integral with the frame. Enclosure shall be drip-proof guarded and shall include rodent screens.

G. Alternator rotor poles shall be built up of individually insulated steel punchings. Poles shall be form wound and bonded with high strength varnish, then baked. Braze cage connections for strong construction and permanent electrical characteristics. Bolt each pole to the rotor shaft.

H. Provide a directional blower on the rotor shaft to draw cooling air from the exciter end, over the rotor poles and through louvered openings in the drive end.

I. The alternator shall have a permanently lubricated anti-friction bearing. The designed bearing life, based on the B-10 curve of the American Bearing Manufacturers Association, shall be not less than 40,000 hours.

J. Provide an automatic thermostatically controlled space heater rated 120 Volt, single phase, to maintain not less than 90 degrees F temperature with an ambient temperature of 50 degrees F.

K. The alternator shall include a NEMA 1 terminal box, sized to NEC clearances, and located to provide convenient arrangement inside the enclosure for the wiring terminations and circuit breaker.

L. At any balanced load between 75 and 100 percent rated output, the difference in line-to-neutral voltage among the three phases shall not exceed one percent of the average line-to-neutral voltage. Under an unbalanced load, consisting of 25 percent load at 1.0 power factor placed between any phase and neutral and zero load on each of the other two phases, the maximum simultaneous difference in voltage between the three line-to-neutral phases shall not exceed three percent of rated line to neutral voltage.

2.07 GENERATOR CIRCUIT BREAKER

A. Furnish one molded case, three pole, circuit breaker for three phase overloads and/or short-circuit protection. Current ratings shall be as required to protect the generator unit from overload or short circuit and shall be as shown on the Electrical Drawings. The circuit breaker shall operate both manually for normal switching functions and automatically during overload and short-circuit conditions. Circuit breaker shall be UL listed as 100 percent continuous rated to carry the full ampere load of the generator. The circuit breaker shall include contacts to provide alarm if the breaker is in the “Tripped” or “Off” position.

B. The trip unit for each pole shall have elements providing inverse time delay during overload conditions and instantaneous magnetic tripping for short-circuit protection.

C. The circuit breaker shall meet standards established by Underwriter’s Laboratories.

D. The circuit breaker shall be mounted in a NEMA 1 housing attached to the generator terminal box, located for easy access to provide NEC clearances. The circuit breaker shall face in the direction of access to the generator when installed within the generator room.

2.08 SOUND ATTENUATED WEATHERPROOF HOUSING

A. The skid mounted generator unit, engine starting batteries, battery charger, generator control panel, and exhaust silencer shall be enclosed in a sound attenuated weather proof walk-in type aluminum enclosure designed to meet the conditions set forth below. The enclosure shall be in compliance with the National Electrical Code (NEC) and the National Fire Protection Association (NFPA) for clearance around electrical equipment as specified. The enclosure shall conform to the following design criteria:

1. Rigidity wind test equal to 115 mph
2. Roof load equal to 50 lbs per sq. ft.
3. Floor load equal to 200 lbs per sq. ft.
4. Rain test equal to 4-in per hour

5. Enclosure certified to meet the BOCA basic building and mechanical codes and the North Carolina State Building Code.
6. Seismic design shall be in accordance with the North Carolina State Building Code

Test data on similar construction by the manufacturer shall be available upon request.

B. The enclosure shall have an interior width as required to provide not less than 24-in access space on each side of the engine-generator set. The length of the enclosure shall be such as to provide space for and NEC clearances of the engine-generator set. Enclosure height shall not be less than 108-in, or as required for the engine-generator set and silencer. The bottom clearance of the silencer shall not be less than 96-in if the silencer extends farther than the end of the alternator end of the generator set.

C. The enclosure shall consist of a roof, floor and underframe, two side walls, and two end walls. It shall incorporate intake/exhaust hoods/plenums as required to reduce source noise sufficiently that the entire installation shall conform to the noise limitations specified herein.

D. The roof, walls, and hoods shall each be of aluminum panels, either frameless, one-piece semi-monocoque, or frame supported construction. All framing members shall be 6063-T6 aluminum, or welded steel. Skin material shall be minimum thickness of 0.040-in aluminum, either prepainted or painted after fabrication (roof shall be mill-finish). A minimum of six colors shall be available for enclosure exterior. Exposed fasteners for skin panels shall be hand-riveted to the framing members on 3-in centers maximum. Pop rivets and bolts shall not be acceptable exposed fasteners to attach adjacent skin panels or to attach skin materials to the framing. Non-exposed fasteners shall be stainless steel self-tapping screws or welded. Roof assembly shall be cambered to aid in rain run-off. Provide a bolt-in-place removable end wall panel on the generator air discharge end for maintenance and/or equipment installation, or alternatively, utilize drop-over construction, to allow the entire enclosure to be removed from the base should major maintenance or modification be required on the generator.

E. Insulation in the walls and roof shall be semi-rigid, thermo-acoustic, thickness as required to meet the noise criteria specified. Lining shall be perforated, mill-finish aluminum. Self-adhesive foam and loose or bat-type insulating materials shall not be acceptable.

F. The floor and underframe shall consist of two wide flange “I” beam or channel longitudinal skids, with fabricated steel crossmembers on 16 inch centers. Crossmembers shall be overlaid with 1/8-in thick steel plate firmly welded to the crossmembers to provide a solid floor. The steel plate shall be diamond pattern for slip resistance, or shall be overlain with self-adhesive non-slip surfacing. A 3/4 inch pressure treated wood subfloor may be used between the crossmembers and the steel deck as required for further sound attenuation, for acoustic isolation of the engine/generator and base assembly. Provide steel tapping plates coordinated with the generator set manufacturer, for anchoring the equipment within the enclosure. The floor shall provide a flat walking surface without obstructing support members for the generator set. The floor shall incorporate a diked perimeter to form a containment area for spilled fluids such as coolant, fuel, or lubricating oil. The diked volume shall be at least 150 percent of the greatest fluid volume contained within the engine. The dike shall have steel edges welded and/or caulked to the floor. The conduit stub-up and any other floor penetrations shall be diked. The diked area may form the containment within itself, or it may slope and drain to a storage volume. All portions of the diked area shall be accessible for cleaning without removing covers or floor plates.

G. Provide four-point lifting lugs at or near the corners of the enclosure base, with capacity for rigging the entire assembly. Quality assurance procedures of the manufacturer shall include regular testing of the lifting lugs. Design the enclosure base and attachment to the concrete support pad to support the enclosure gravity loads, dynamic loads, and seismic forces and shall conform to applicable requirements of the Massachusetts State Building Code. Provide two electrical grounding lugs mounted on the base for connection of the grounding system furnished under another Section of Division 16.

H. Provide two single personnel access doors, one on each side of the enclosure. Doors shall consist of an extruded aluminum frame with skin material matching the enclosure. Doors shall be fully gasketed to form a weathertight perimeter seal. Hinges shall be forged aluminum with stainless steel pins, handle shall be stainless steel and padlockable, and lock mechanism shall be three-point, with panic hardware to allow opening from inside even when padlocked. Provide a hold-open latch on each door. Furnish fabricated steel steps at each access door to access the enclosure from the elevation of the base slab. Step risers shall not exceed 8 inch height. Attach steps to the enclosure base, such that the steps shall not depend upon a concrete foundation for support.

I. Air handling during operation of the generator set shall be as follows: Air shall enter the enclosure through a removable sound attenuating hood and louver. Provide a motor operated damper on the intake louver, wired to open upon engine startup. Radiator discharge shall be through a gravity operated damper and louver, and into a sound attenuating discharge plenum with vertical up discharge. The system shall not exceed 0.5-in w.g. total external static pressure to ensure adequate airflow for cooling and combustion. Both the intake and discharge louvers shall be of formed and extruded aluminum, and shall be screened with stainless steel screen. Motor operated and gravity dampers shall be of formed and extruded aluminum.

J. Air handling when the generator is not in operation shall consist of a separate intake louver with motor operated damper and a separate wall mounted exhaust louver with gravity damper and an exhaust fan. The fan shall have capacity to remove heat generated by solar heating of the roof and walls, with not greater than a 10 degree F temperature rise within the enclosure, and at a static pressure rise as required for the sizing and type of louvers and dampers. Mount the fan high on the wall of the enclosure.

K. The enclosure shall include all necessary hardware to internally mount the specified exhaust silencer and maintain the weatherproof integrity of the system.

L. The resulting housing, in combination with the engine exhaust silencer, with engine generator in operation at full load, shall meet the noise limitation criteria specified in Paragraph 1.08. It shall be the responsibility of the generator unit manufacturer to choose thickness of insulation, number of baffles, etc. to meet the aforementioned sound criteria.

M. Furnish one prewired 100 Amp load center with separate circuit breakers for each branch circuit. Mount the panel on the wall inside the enclosure. Panel board shall have a 100 Amp 2-pole main breaker. Panelboard shall be fully rated 22,000A ISC (rms symmetrical). Power supply to the panel board shall be 120/240 Volt, Single Phase, 3 wire from a lighting panel.

P. Wire the jacket water heater; alternator space heater; battery heater; battery charger; damper motors; ventilation fan; enclosure lighting; and one duplex 120 Volt grounded ground fault protected convenience outlet adjacent to the load center, each powered from a separate circuit breaker. Provide two 120 Volt lights within the enclosure operated by separate 3-way switches

at each access door to illuminate the interior of the enclosure. Provide one light operated off of battery voltage with timer switch to illuminate the interior of the enclosure. Provide one exterior light over each entrance door, with the switch located inside the door. Lights shall be designed for outdoor service with guards to protect against breakage. All wiring shall be THHN type and shall run within galvanized steel conduit. Conduit and wiring within the enclosure shall be in conformance with applicable requirements of other Sections of Division 16.

Q. Furnish and install within the enclosure two emergency lighting battery units equal to the emergency lighting units specified in other Sections of Division 16. Provide power supply wiring from the panel board to the emergency lighting units through a dedicated breaker.

R. Furnish one dispenser box containing 200 pairs of ear plugs. Ear plugs shall be of light weight, soft, non-toxic foam designed to expand to obtain a proper fit. Ear plugs shall be disposable or reusable and washable, packaged by the pair in sealed pouches. Noise reduction rating shall be 25 to 30 dB at frequencies of 0 to 1400 Hz and 30 to 40 dB at higher frequencies. Provide a wall mount bracket for the dispenser.

S. All openings in the enclosure shall be screened, baffled, or otherwise closed to prevent the entrance of insects and rodents.

T. The housing shall have signs on all four sides of the enclosure reading "Danger-High Voltage".

U. The exterior of the enclosure shall receive the manufacturer's standard exterior paint of color as selected by the Engineer from the manufacturer's standard color chart. Furnish one quart of touch-up paint.

V. It is the intent of this specification to provide complete compliance with all applicable codes, laws and regulations.

W. The enclosure and all appurtenances as specified herein shall be as manufactured by Pritchard Brown Division of Enviro-Industries, Inc. Baltimore, MD; Acoustic Sheet Metal, Norfolk, VA; DTS Inc., Sioux Falls, SD; or equal.

2.09 SURFACE PREPARATION AND SHOP PAINTING

A. The engine generator set and associated equipment shall be shop primed and finished coated in accordance with the manufacturer's standard practice prior to shipment. One quart of touch-up paint shall be supplied by the manufacturer.

2.10 SHOP TEST

A. Shop test the complete engine generator unit and the generator control panel prior to shipment. Submit four copies of the complete certified test record to the Engineer prior to shipment.

B. The tests shall be sufficient to assure that the unit will operate successfully and meet all specified operational requirements. The manufacturer shall furnish all necessary instruments, filters, fuel gas, electric power, and load banks for the test.

C. The shop test shall consist of, but not be limited to, two continuous hours of operation on a reactive load bank at 0.8 power factor for at least one half hour each at zero load, 1/4 load, 1/2 load, 3/4 load and full load. During the test, voltage and frequency regulation, and voltage and

current balance shall be tested and recorded to show compliance with the requirements of this Specification. Test each of the automatic alarm and shut-down devices and include certification of the test in the shop test record. The respective values at which the automatic devices alarmed and/or stopped the engine shall be tested and recorded. During the shop test, readings shall be taken and recorded every thirty minutes for each of the following:

1. Time

2. Ambient temperature.

3. Load:

   a. Volts for each phase
   b. Amps for each phase
   c. Kilowatts
   d. Power factor
   e. Frequency

4. Engine jacket water temperature

5. Lubricating oil pressure

6. Lube oil temperature

7. Cubic feet of fuel consumed per hour

D. Shop test the alternator in accordance with IEEE Standard 115. Testing shall include the following:

1. Cold resistance of all windings
2. Insulation resistance of all windings
3. Polarity of field coils
4. High potential on all windings
5. Open circuit saturation

E. After completion of all testing, the following is required:

1. The load limit shall be sealed. The seal shall be applied, using a seal press which embosses the manufacturer's initials on the lead seal.

2. All entrapped water shall be drained and proper protection applied to prevent the entry of water during shipment or a long period in storage while waiting for installation.

3. The engine shall be given proper treatment for its protection for extended storage at the job site while waiting for completion of installation.

PART 3 EXECUTION

3.01 INSTALLATION

A. Provide the services of a qualified factory representative to check the installation of the generator unit to ensure a proper installation, conduct the field test specified herein, and to instruct the Owner's personnel in the operation and maintenance of the equipment.

B. Mount the engine-generator enclosure on a flat concrete base and level to provide equal bearing for all supports as work of this Section. Anchors shall be in accordance with the manufacturer's recommendations.

C. Installation shall include furnishing all required coolant and lubricants.

3.02 EQUIPMENT START-UP

A. After installation and manufacturer's representative check of the installed equipment, operate the unit to demonstrate its ability to operate continuously without vibration, jamming, leakage or overheating and to perform specified functions.

B. Comply with manufacturer's operating and maintenance instructions during start-up and operation.

C. Promptly correct improper installation of equipment.

D. Cooperate with the supplier of the equipment at the time of start-up and in making all final adjustments necessary to place the equipment in satisfactory working order. Start-up shall not commence without the presence of the manufacturer's representative.

3.03 FIELD TEST

A. Upon completion of the installation and as soon as conditions permit, the engine driven generator and associated electrical circuits and controls shall be tested in the presence of the Engineer by the Contractor and the service representative for the manufacturer of the engine driven generator unit to assure that the systems function as specified. Before conducting the on-site field tests, the Contractor shall submit to the Engineer for approval, a copy of the proposed test data log sheet.

1. Prior to scheduling the test, notify the Engineer in writing that all requirements and provisions of the Contract Documents have been fulfilled, that all apparatus has been cleaned, properly adjusted and is ready for operation and that the Operation and Maintenance manuals have been submitted.

2. The manufacturers' representatives shall make such changes in wiring or connections and such adjustments, repairs or replacements necessary to make the circuit, device or control system function as specified and otherwise comply with the Contract Documents.

B. The test shall consist of two hours of continuous operation at full rated load using a portable resistive load bank. Furnish the load bank plus all connecting cables, metering equipment, and other equipment or devices required to perform the load bank testing. During the test, take and record the same readings as outlined under Shop Test Paragraph 2.10 at 30 minute intervals.

C. As part of the field test, test each of the automatic alarm and shutdown devices and record the respective values at which the devices will alarm and/or stop the engine. Make any adjustments required in the devices to make the operating values correspond to those recommended by the

engine manufacturer and as recorded during the shop test. Testing shall include verification of proper voltage regulation and voltage and current balance.

E. Provide a person qualified to conduct sound pressure level testing, and test instrumentation, to take and record octave band sound pressure level readings at the time of the on-site field test, when operating the generator at maximum available station load (with the portable resistive load shut off). This test shall be specific to the engine exhaust system. The sound pressure readings shall be within the limits permitted by this specification. If changes are necessary to accomplish the required exhaust silencing, perform revisions as required and retest.

G. If the generator system fails to fulfill the performance requirements of this specification, perform corrections and retest the system to assure full compliance. All expenses associated with the field tests, including any corrective action and retesting shall be part of the work of this Section.

END OF SECTION