Permit No.	Date	DIN
11-07	**February 10, 2012**	**16090**

RECEIVED
February 9, 2012
Solid Waste Section
Asheville Regional Office

Buncombe County, North Carolina

Buncombe County Solid Waste Management Facility Landfill Gas Collection and Control and Landfill Gas to Energy Systems

Operation Plan

Submitted: February 2012

Contents – Operation Plan
LFGCCS and LFGTE

Section 1 Purpose

1.1 System Drawings 1-1

Section 2 Operations

2.1 LFGCCS 2-1
- 2.1.1 Horizontal System 2-1
- 2.1.2 Vertical Wells 2-1
- 2.1.3 Operations 2-1
- 2.1.4 Condensate Management 2-1

2.2 LFGTE Facility 2-1

Section 3 Inspection and Monitoring

3.1 LFGCCS 3-1

3.2 LFGTE Facility 3-1

Section 4 Maintenance

4.1 LFGCCS 4-1

4.2 LFGTE Facility 4-1

Section 5 Emergency Procedures

5.1 Inclement Weather 5-1

5.2 Fires 5-1

Appendices

Appendix A System Drawings

Appendix B LFGTE Equipment O&M Manuals

Section 1 – Purpose

The purpose of this Operations Plan is to provide the Buncombe County staff with a manual that will serve as a guide for safe and efficient operation of the landfill gas collection and control system (LFGCCS) and landfill gas to energy (LFGTE) facility. This plan includes the following information:

- Operation
- Inspection and Monitoring
- Maintenance
- Emergency Procedures

1.1 System Drawings

Drawings for the LFGCCS and the LFGTE facility are provided as Appendix A.

Section 2 – Operations

2.1 LFGCCS

The LFGCCS uses an integrated leachate recirculation/gas collection horizontal system and a dedicated landfill gas (LFG) extraction vertical wellfield system.

2.1.1 Horizontal System

The horizontal system utilizes a series of horizontal injection trenches (HIT) installed throughout the waste mound. When the HIT is not used for recirculation of leachate, LFG can be collected for combustion at the LFGTE facility. The HITs will be installed at designated elevations throughout the waste mass of Cell 6 and future cells.

2.1.2 Vertical Wells

Vertical wells have been installed in the Cells 1 through 5 waste mass. The wells are dedicated for LFG collection and are connected to the same collection system conveying LFG to the LFGTE facility.

2.1.3 Operations

LFGCCS will operate continuously. Collected gas will be combusted in the generator at the LFGTE facility or at the flare. The operator will routinely monitor flare performance parameters including methane and oxygen concentrations, and adjust system parameters as necessary to optimize performance. The LFGCCS will be monitored and adjusted routinely by County personnel to maximize system performance.

2.1.4 Condensate Management

The gas header pipe is sloped to drain condensate to selected low points where condensate sumps are located. Collected condensate is be pumped to the leachate pond.

2.2 LFGTE Facility

Operation of the LFGTE facility will be in accordance with manufacturer operations and maintenance manuals provided in Appendix B.

Section 3 – Inspection and Monitoring

The County has a Title V operating permit, Permit No. 11-542-10. In January 2012, the Western North Carolina Regional Air Quality Agency accepted the Tier 2 testing results. Therefore, the County is not required to install a LFGCCS. Even though, the County has installed a LFGCCS, monitoring is not required.

3.1 LFGCCS

The operator will monitor and adjust the active LFG extraction wells in the collection system as needed to maximize system performance. Wellfield balancing will occur at a frequency as determined by County staff. Pressure, temperature, and methane and oxygen concentrations will be monitored. The operator will adjust the system as indicated by monitoring results.

As stated above, there are no state or federal regulations requiring monitoring.

3.2 LFGTE Facility

Inspection of the LFGTE facility will be in accordance with manufacturer operations and maintenance manuals provided in Appendix B at a frequency determined by County staff and manufacturers.

As stated above, there are no state or federal regulations requiring monitoring.

Section 4 – Maintenance

4.1 LFGCCS

The flexible hose on the gas wellhead connection will be inspected regularly and replaced if necessary. The control valves and pressure gauges will be inspected regularly for proper operation and maintained in accordance with manufacturer's directions. The control and instrumentation performance will be monitored regularly to assure proper operation and performance. Maintenance of the blower and flare will continue in accordance with manufacturer's directions.

Zone butterfly valves and access risers were installed during construction. Access risers will allow jet-cleaning if deemed necessary.

4.2 LFGTE Facility

Maintenance of the LFGTE facility will be in accordance with manufacturer operations and maintenance manuals provided in Appendix B at a frequency determined by County staff and manufacturers.

Section 5 – Emergency Procedures

5.1 Inclement Weather

The LFGCCS and LFGTE facility can operate during wind, heavy rain, snow, freezing or other adverse conditions. If, for some reason, the collection system and/or facility cannot operate due to inclement weather, the County will monitor until system can be started. Since the County is not required to run a LFGCCS, in accordance with the facility Title V operating permit, the collection system and/or facility can be shut down at staff discretion.

5.2 Fires

Fires that break out close near the vertical wells in the landfill shall be handled as described in the Subtitle D Landfill Operation Plan. Those wells will be shut off from the LFGCCS.

The local fire protection agency will provide fire fighting services when needed.

Appendix A
System Drawings

Coordinate Table – Structures			
Pt #	Northing	Easting	Descriptor
2060	738996.71	920584.77	ZV–7
2061	739059.47	920639.62	GHDPE 8/4 tee
2062	739001.77	920851.29	GHDPE 8/4 tee
2063	738797.26	920883.43	SCV–1
2064	738797.41	920893.83	SCV–2
2065	738533.55	920887.25	GHDPE 8"/4" tee
2066	738835.65	920887.28	GHDPE 8 tee
2067	738847.24	920736.52	GHDPE 8/4 tee
2068	738536.00	920577.28	GHDPE 8/4 tee
2069	738621.70	920671.82	GHDPE 8 tee
2070	738643.49	920884.94	GHDPE 8 tee
2071	738644.03	920894.41	GHDPE 8/4 tee
2072	738597.04	921186.47	ZV–8
2073	738597.97	921189.92	GHDPE 8/6 tee
2074	738559.04	921058.64	GHDPE 8 bend
2075	738572.99	921068.10	GHDPE 8 tee
2076	738613.19	921239.36	GHDPE 8 tee
2077	738615.61	921249.08	GHDPE 8/4 tee
2078	738701.98	921372.09	GHDPE 8 tee
2079	738704.67	921374.52	GHDPE 8/4 tee
2080	738514.18	921410.72	GHDPE 8
2081	738633.49	921574.19	GHDPE 8/4 tee
2082	738589.57	921584.06	GHDPE 8 tee
2083	738462.63	921607.73	GHDPE 8/4 tee
2084	738441.74	921601.43	GHDPE 8 tee
2085	738668.84	921453.77	GHDPE 8"/4" tee
2086	738949.05	921267.02	GHDPE 8"/4" tee
2087	738803.43	921212.42	GHDPE 8"/4" tee
2088	738965.83	920943.39	GHDPE 8 tee
2089	738673.87	920649.74	ZV–3
2090	738659.87	920706.01	GHDPE 8"/4" tee
2091	738587.79	920526.80	ZV–1
2092	738913.35	921039.46	GHDPE 8 tee
2093	738913.33	921036.66	GHDPE 8"/4" tee
2094	738846.96	921047.66	ZV–7
2095	738927.06	921153.25	GHDPE 8/6 tee
2096	738928.33	921160.75	GHDPE 8/6 tee
2097	738927.31	921156.79	ZV–10
2098	739007.85	921361.56	GHDPE 8 tee
2099	738791.83	921589.67	GHDPE 8/6 tee
2100	738800.69	921590.44	GHDPE 8/6 tee
2101	738797.00	921590.07	ZV–14
2102	739055.64	921433.33	GHDPE 8 tee
2103	739047.30	921421.55	GHDPE 8/4 tee
2104	738804.03	921425.49	ZV–12
2105	738701.20	921227.07	ZV–9
2106	738745.87	920889.26	ZV–6
2107	738853.84	920687.39	ZV–4
2108	738857.67	920660.51	GHDPE tie in
2109	738918.10	920520.88	GHDPE tie in
2110	738694.52	920486.32	GHDPE tie in
2111	739156.77	921016.19	GHDPE tie in
2112	738782.29	921212.71	SCV–3
2113	738783.46	921219.45	SCV–4
2114	738933.32	921187.10	GHDPE 8 tee
2115	738302.14	921541.12	ZV–13
2116	738390.54	920820.18	ZV–5
2117	739118.60	921315.49	ZV–11
2118	738816.77	921591.28	GHDPE 8/4 tee
2119	739002.44	921616.90	GHDPE 8/4 tee
2120	738596.49	921183.14	GHDPE 8/6 tee
2121	739144.45	921230.66	GHDPE tie in
2260	739279.43	921939.64	crs 5

Coordinate Table – Gas Lines			
Pt #	Northing	Easting	Elevation
2125	738998.16	920851.01	2077.72
2126	738977.35	920548.22	2044.94
2127	738983.56	920551.67	2045.50
2128	739003.87	920572.43	2049.83
2129	739043.33	920613.88	2055.29
2130	739059.97	920634.07	2057.49
2131	739045.42	920678.06	2063.75
2132	739032.83	920725.47	2068.35
2133	739020.05	920773.74	2071.01
2134	739004.06	920838.58	2074.38
2135	738939.59	921224.67	2086.20
2136	738973.79	921308.11	2075.52
2137	739032.73	921394.12	2058.10
2138	738921.56	921102.28	2092.85
2139	738914.81	921053.72	2095.34
2140	738933.11	920996.36	2092.13
2141	738984.28	920900.12	2079.26
2142	738491.39	921471.33	2052.30
2143	738473.59	921518.05	2048.00
2144	738456.13	921564.26	2045.24
2145	738571.47	920539.73	2055.23
2146	738530.87	920571.44	2059.72
2147	738576.91	920623.13	2070.06
2148	738620.31	920653.30	2082.41
2149	738622.45	920668.70	2084.00
2150	738627.20	920726.19	2085.90
2151	738632.92	920775.39	2088.50
2152	738637.87	920824.78	2091.08
2153	738640.38	920855.03	2092.89
2154	738633.39	920932.33	2092.00
2155	738612.98	920977.62	2089.50
2156	738593.34	921023.03	2086.90
2157	738507.27	920983.43	2062.68
2158	738476.76	920941.21	2056.98
2159	738449.13	920900.62	2045.11
2160	738421.46	920860.45	2036.31
2161	738537.79	921026.61	2072.55
2162	738570.01	921100.70	2080.45
2163	738615.94	921252.98	2089.07
2164	738645.71	921293.63	2091.65
2165	738689.86	921357.23	2095.56
2166	738612.35	921540.85	2086.50
2167	738635.19	921496.69	2089.03
2168	738671.45	921425.92	2093.30
2169	738691.17	921390.50	2095.45
2170	738640.29	920495.34	2045.23
2171	738633.66	920495.86	2045.71
2172	738614.62	920507.22	2047.90
2173	738370.88	920799.98	2019.10
2174	738374.60	920800.21	2019.74
2175	738575.64	921117.95	2081.40
2176	738587.72	921156.72	2083.50
2177	738797.23	920888.58	2104.07
2178	738797.32	920855.54	2104.07
2179	738799.97	920805.06	2103.18
2180	738795.62	920926.98	2103.61
2181	738795.80	920961.81	2102.86
2182	738794.68	920993.42	2102.81
2183	738791.08	921037.87	2102.46
2184	738782.63	921216.00	2101.40
2185	738665.87	920693.47	2092.19
2186	738658.32	920707.95	2093.40
2187	738703.24	920537.37	2052.99
2188	738675.92	920639.82	2076.90
2189	738689.82	920639.77	2076.12
2190	738791.06	921060.37	2102.22
2191	738789.79	921109.04	2101.10
2192	738787.10	921152.64	2100.29
2193	738781.75	921211.01	2101.22
2194	738783.65	921221.18	2101.18
2195	738783.84	921226.15	2100.01
2196	738783.31	921264.60	2100.14
2197	738778.97	921322.43	2100.52
2198	738776.91	921394.63	2100.48
2199	738784.93	921053.78	2102.91
2200	738731.82	921223.11	2097.40
2201	738891.66	921195.24	2096.45
2202	738842.60	921204.61	2098.97
2203	738726.11	921060.44	2098.96
2204	738676.12	921066.59	2096.11
2205	738639.02	921068.91	2094.00
2206	738640.42	921234.79	2092.50
2207	738713.86	921382.39	2097.42
2208	738777.16	921414.24	2101.00
2209	738866.96	921455.13	2095.38
2210	738899.49	921431.70	2092.07
2211	738954.39	921394.90	2079.70
2212	738980.97	921378.77	2072.53
2213	739123.49	921011.36	2038.53
2214	739072.36	921003.92	2052.99
2215	738898.53	920558.55	2050.88
2216	738798.08	920835.71	2103.98
2217	738827.91	920887.44	2102.40
2218	738837.33	920838.66	2098.50
2219	738841.64	920779.15	2095.50
2220	738865.71	920890.37	2100.45
2221	738893.92	920902.37	2098.50
2222	738929.81	920923.60	2094.75
2223	738913.14	921032.35	2094.04
2224	739055.27	921434.29	2050.66

Coordinate Table – Gas Lines			
Pt #	Northing	Easting	Elevation
2225	738295.07	921537.65	2000.08
2226	738294.88	921539.71	2000.63
2227	738705.42	921582.08	2094.45
2228	738643.58	921574.01	2091.03
2229	738605.78	921580.37	2085.30
2230	738550.62	921591.39	2071.32
2231	738505.12	921600.08	2060.96
2232	738467.35	921607.28	2051.61
2233	738452.57	921605.87	2047.36
2234	738424.63	921592.25	2039.49
2238	738395.65	921580.23	2030.93
2239	738367.13	921568.67	2024.30
2240	738338.25	921556.78	2016.07
2241	738589.05	921582.74	2081.85
2242	738765.89	921587.28	2097.90
2243	738793.18	921589.71	2097.11
2244	738866.28	921595.50	2092.80
2245	738893.12	921599.73	2091.40
2246	738915.01	921603.20	2086.43
2247	738936.43	921606.64	2080.23
2248	738962.24	921611.53	2072.98
2249	738984.91	921616.87	2067.48
2250	739001.77	921619.36	2063.25
2251	739002.78	921615.10	2062.65
2252	739013.82	921566.98	2058.93
2253	739026.03	921518.82	2055.57
2254	739041.21	921471.43	2052.83
2255	739137.23	921277.45	2033.68
2256	739070.78	921402.93	2048.46
2257	739093.67	921358.78	2044.27
2258	739117.77	921225.87	2037.37
2259	739050.85	921431.21	2051.32

Coordinate Table – Gas Wells			
Northing	Easting	Elevation	Descriptor
738872.49	921458.34	2103.85	VW–20
738815.03	921587.97	2100.32	VW–24
739005.99	921617.48	2065.03	VW–25
739044.72	921422.65	2057.54	VW–21
739113.84	921221.23	2040.91	VW–17
739070.62	921000.95	2056.24	VW–13
738915.90	921036.72	2098.57	VW–12
738998.15	920851.15	2079.72	VW–9
739062.74	920640.38	2060.56	VW–4
738898.58	920563.12	2055.02	VW–3
738706.66	920538.70	2056.90	VW–2
738533.89	920579.53	2063.29	VW–1
738662.38	920708.39	2098.07	VW–5
738842.25	920736.25	2098.07	VW–6
738834.22	920891.18	2107.16	VW–8
738646.77	920894.45	2098.94	VW–7
738577.72	921073.29	2085.50	VW–10
738619.09	921250.33	2092.84	VW–14
738512.88	921407.74	2060.90	VW–18
738461.53	921611.08	2053.98	VW–22
738633.91	921577.65	2098.52	VW–23
738708.80	921373.51	2104.22	VW–19
738804.25	921216.44	2104.79	VW–15
738726.97	921065.29	2105.58	VW–11
738945.75	921268.84	2088.24	VW–16

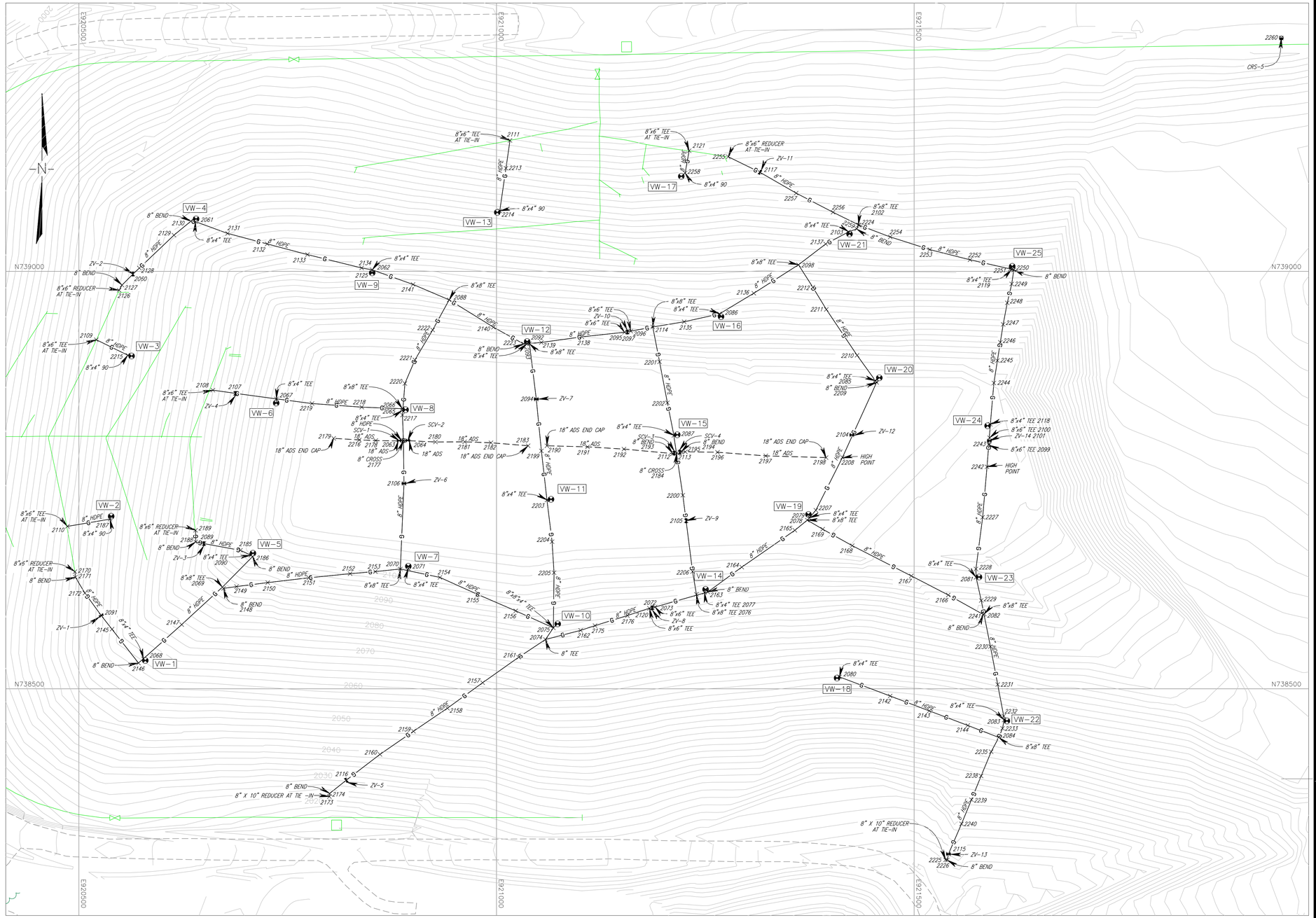

GRAPHIC SCALE 1"=60'
0 60 120 180

LEGEND

- EXISTING TOPO (FROM OTHERS) (2' INTERVAL)
- NEW LANDFILL GAS LINES
- GW–25 NEW GAS WELLS
- G/V NEW GAS VALVE
- EXISTING LANDFILL GAS LINES
- 2115 × AS–BUILT POINT NUMBER (SEE TABLE)
- 5 SURVEY CONTROL POINT

CALIBRATION SURVEY RESULTS:

Scale Factor: 1.0002708833
Slope North: 48.846 ppm
Slope East: 36.632 ppm
Horizontal Residual: 0.047 ft.
Vertical Residual: –0.012 ft.

NOTE: THE SURVEY SHOWN IS TIED TO BUNCOMBE LANDFILL SITE CONTROL AND IS REFERENCED TO NC COORDINATE SYSTEM USING POINTS LISTED BELOW.

PT#	NORTH	EAST	ELEVATION	DESCRIPTION
3012	739310.280	920480.570	2002.110	MUP
5	739287.400	922359.730	2039.820	MON
2	738354.540	922040.350	2062.420	TP12/54
1102	738277.090	920111.360	2057.400	MON
5001 (CHECK POINT)	738279.430	920471.880	2022.710	MF

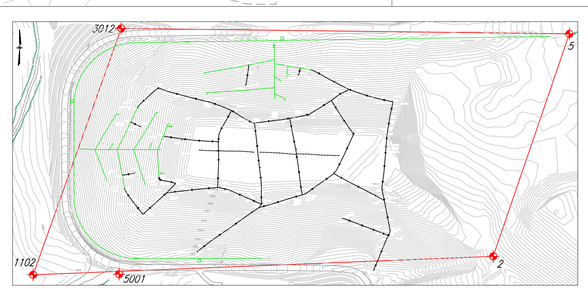

GRAPHIC SCALE 1"=300'
0 300 600 900

NOTES:
1. THE TOPOGRAPHIC INFORMATION SHOWN ON THIS RECORD DRAWING IS TAKEN FROM PLANS BY CAMP, DRESSER, AND MCKEE, 5400 GLENWOOD AVE., SUITE 300, RALEIGH, NC 27612, 919–787–5620, ENTITLED "BUNCOMBE COUNTY NORTH CAROLINA, BUNCOMBE COUNTY SOLID WASTE MANAGEMENT FACILITY, LANDFILL WASTEWATER PRE–TREATMENT SYSTEM, LANDFILL GAS–TO–ENERGY–PROJECT" SHEET G–1, EXISTING CONDITIONS: CELLS 1–5, DATED 10/22/10.

FLORA
SURVEYING ASSOCIATES
12863 GEORGE WASHINGTON MEMORIAL HIGHWAY
GLENNS, VIRGINIA 23149
(800) 474-5052 (804) 694-4578

REV.	DATE	DESCRIPTION	DR BY	APP BY

DES BY		
DRN BY	D.N.W.	11/10
CHK BY	B.W.F.	11/10
REV BY		
APP BY		
DATE:	11/08/10	

PROJECT No. 09–1202 SCALE: 1"=60'

PROJECT: BUNCOMBE COUNTY SOLID WASTE MANAGEMENT FACILITY
BUNCOMBE COUNTY, NORTH CAROLINA

SHEET TITLE:

LANDFILL GAS–TO–ENERGY PROJECT RECORD DRAWING

SHEET 1 OF 1

DRAWING No. RD–01

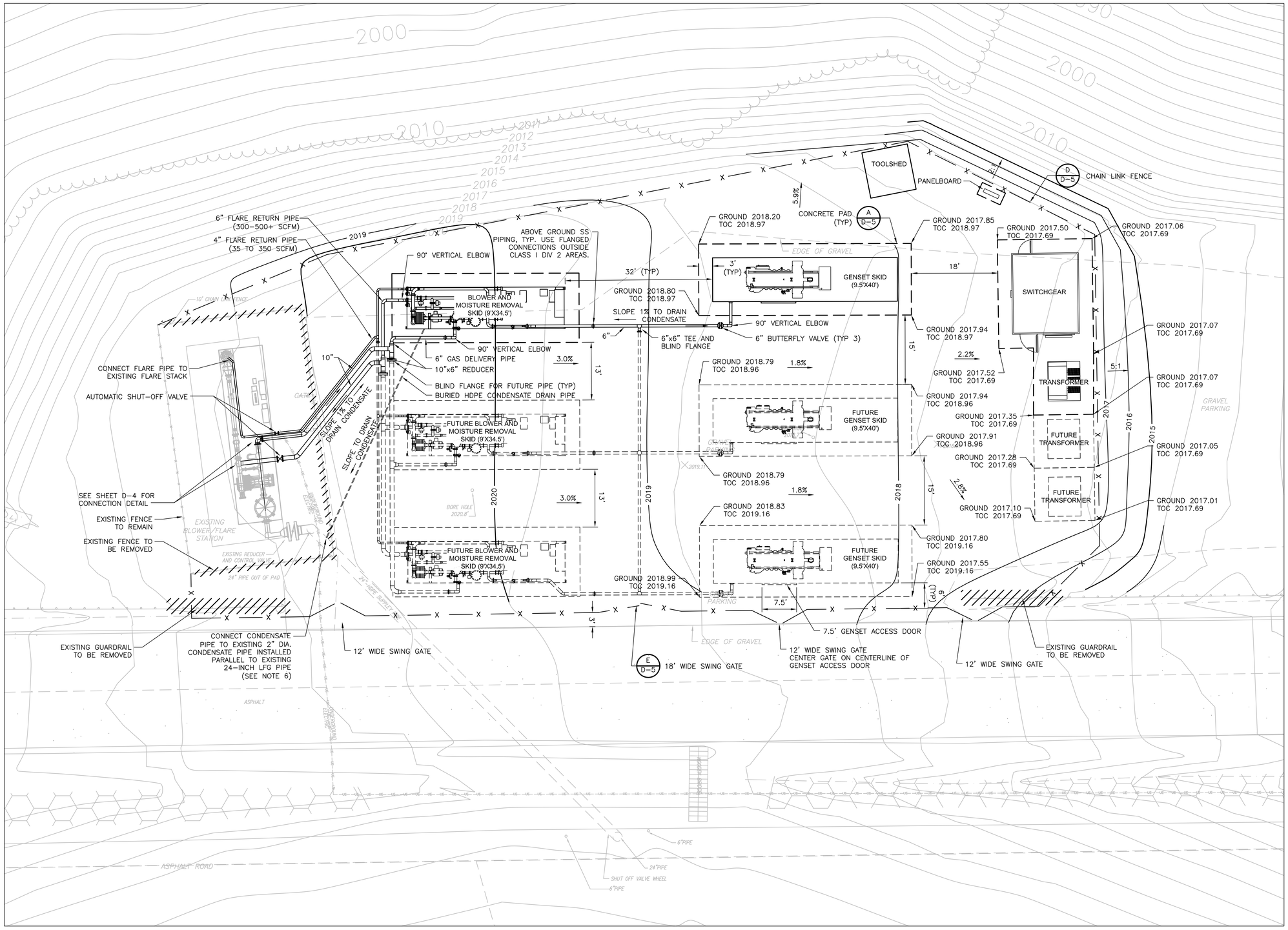

PLAN

1"=10'

1" = 10'

5 0 10

LEGEND:

- EXISTING FENCE (APPROXIMATE)
- EXISTING CONTOURS
- EXISTING TREELINE
- LANDFILL GAS PIPING (UNDERGROUND)
- EXISTING ELECTRICAL CABLE
- CHAIN LINK FENCE
- TO BE REMOVED

NOTES:

1. THE LAYOUT SHOWN ON THIS SHEET IS APPROXIMATE. CONTRACTOR TO SUBMIT A DETAILED LFTGE FACILITY LAYOUT TO ENGINEER FOR APPROVAL. CONTRACTOR TO PERFORM GRADING AS REQUIRED TO PROVIDE LEVEL SURFACES FOR CONCRETE PADS.
2. CONCRETE PADS SHALL EXTEND 3–FT BEYOND MOUNTED STRUCTURES IN ALL DIRECTIONS.
3. ALL ABOVE GROUND GAS HANDLING PIPE SHALL BE STAINLESS STEEL AND SLOPED TO DRAIN CONDENSATE TO MOISTURE REMOVAL SKID.
4. REFER TO ELECTRICAL DRAWINGS FOR CONDUIT AND LIGHTING REQUIREMENTS.
5. CONTRACTOR TO FIELD LOCATE EXISTING CONDENSATE DRAIN AND DETERMINE IF SUFFICIENT ELEVATION DIFFERENCE EXISTS TO ALLOW NEW CONDENSATE PIPES TO DRAIN BY GRAVITY.
6. CONTRACTOR TO DETERMINE PIPE SIZES FOR GAS HANDLING AND CONDENSATE DRAINAGE. ABOVE GROUND CONDENSATE PIPE SHALL BE INSULATED AND HEAT TRACED.
7. REFER TO INSTRUMENTATION DRAWINGS FOR VALVE LOCATIONS AND TYPE.

REV. NO.	DATE	DRWN	CHKD	REMARKS
2	2/9/11	MK	CG	ADDED GRADING/CONC ELEV, CHANGED TRANSFORMER LAYOUT, AND FENCING
1	1/20/11	MK	CG	COMPLETE REVISION OF SKIDS, TRANSFORMERS, SWITCHGEAR, AND PANELBOARD LAYOUT

DESIGNED BY: T PETRUKHIN
DRAWN BY: M KOSKI
SHEET CHK'D BY: C GABEL
CROSS CHK'D BY: M BRINCHEK
APPROVED BY: J BOYER
DATE: SEPTEMBER 2009

CDM
Camp Dresser & McKee
Carolina Corporate Center
5400 Glenwood Avenue, Suite 300
Raleigh, North Carolina 27612
Tel: (919) 787-5620 Fax: (919) 781-5730
consulting • engineering • construction • operations

BUNCOMBE COUNTY, NORTH CAROLINA
BUNCOMBE COUNTY SOLID WASTE MANAGEMENT FACILITY
LANDFILL WASTEWATER PRE-TREATMENT SYSTEM
LANDFILL GAS-TO-ENERGY PROJECT

LFGTE SYSTEM PLAN

PROJECT NO. 6447–64253
FILE NAME: C–4
SHEET NO. **C-4**

CONSTRUCTION DRAWING

C:\cdmxm\koskia\d0494017\ C-4 03/03/11 12:32 Koskia XREFS: CYPPL001, CDM_2436, BASE, LOCATION1 & BORE LOCA, CGDPL002

Appendix B

LFGTE Equipment

O&M Manuals

OPERATION & MAINTENANCE

MANUAL

for a

500 SCFM GAS COMPRESSION SYSTEM

for the

BUNCOMBE COUNTY LANDFILL ALEXANDER, NORTH CAROLINA

P.O. # 73437-02

ENGINEER/CLIENT

CDM CONSTRUCTORS, INC.
1601 Belvedere Rd., Ste. 400E
West Palm Beach, FL 33406
Phone: 561-689-3336
Fax: 561-689-9713

MANUFACTURER

PERENNIAL ENERGY, INC.
1375 County Road 8690
West Plains, MO 65775
Phone: 417-256-2002
Fax: 417-256-2801

PEI # 1641

NOV 2011

TABLE OF CONTENTS

1. Table of Contents

2. Introduction
   Warranty
   Service Policy & Fee Schedule
   H_2S Safety Information

3. System Specifications

4. Operating the System
   System Operation Information
   Instructions for the Gas Compression System Data Log
   Gas Compression System Data Log *(blank copy)*
   Safety Alarm & Shutdown Test Report *(blank copy)*
   Gas Compression System Setpoints *(blank copy)*

5. System Maintenance
   System Maintenance Schedule
   Troubleshooting Alarm & Shutdown Annunciation
   Blower Maintenance
     Regreasing Procedures
     Short/Long Term Storage
   Spare Parts List

6. Data Sheets
   System Model/Serial Numbers
   Component Model/Serial Numbers
   Thermocouple mV to ºF Conversion Chart, Type E
   Flow Rate vs. Delta P Chart
   Flame Arrester Delta P
   Configuration Sheets
     PLC Setup
     VFD
   Shop & Field Test Data
     Gas Compression System Data Log
     Safety Alarm & Shutdown Report

7. Manufacturers' Literature

Tab	Description	RefDes
1.	Air Conditioner	CP-AC-1
2.	Blower, Landfill Gas	GCS-BLR-301
3.	Demister Filter Assemblies	GCS-FLT-301 GCS-FLT-302
4.	Filters, Valve/Instrument Port Vents	FLR-FLTP-302 GCS-FLTP-301..6
5.	Flame Arrester	FLR-TSE-302
6.	Flex-Floating	FLR-FX-302 GCS-FX-301 GCS-FX-302 GCS-FX-303..6 GCS-FX-307
7.	Flow Elements	GCS-FE-301..2
8.	Gas Analysis Cabinet	GCS-GAC-301

9.	Gauges, Pressure	FLR-PI-302 GCS-PDI-301..2 GCS-PI-301 GCS-PI-302..3
10.	Gauges, Temperature	GCS-TI-301
11.	Heaters, Panel	CP-HTR-1 CP-HTR-2
12.	Heat Exchangers	GCS-TX-301 GCS-TX-302
13.	Heat Trace, Insulation, & Thermostat	GCS-HT-1 GCS-INS-1 GCS-TC-1
14.	Level Switches	GCS-LS-701..3
15.	Load Center	CP-EDP-1
16.	Modem	CP-MOD-1
17.	Power Supply	CP-E/E-1
18.	Programmable Logic Controller	CP-PLC-1
19.	Surge Arresters	CP-SSR-1 CP-SSR-2 CP-SSR-3 CP-SSR-4
20.	Thermocouple	CP-TE-401
21.	Touchscreen	CP-YIC-1
22.	Transformer	GCS-E/E-1
23.	Transmitters, Pressure	GCS-PDT-301..2 GCS-PIT-301 GCS-PIT-302..3
24.	Transmitters, Temperature	GCS-TIT-301..5
25.	Valve, Ball (Actuated)	GCS-FCV-305
26.	Valves, Ball (Manual)	FLR-HVP-305..7 GCS-HV-307..9 GCS-HV-701 GCS-HV-702..4 GCS-HV-705 GCS-HVP-301..24 GCS-HVP-701..2
27.	Valves, Butterfly (Manual & Actuated)	FLR-FV-301 FLR-FV-302 GCS-FCV-301 GCS-FCV-302 GCS-FCV-303..4 GCS-FV-301 GCS-HV-301..2 GCS-HV-303 GCS-HV-304..5 GCS-HV-306
28.	Valve, Check	GCS-FSV-301
29.	Valves, Globe	GCS-FCV-701,4..6 GCS-FCV-702..3
30.	Variable Frequency Drives	CP-VFD-1 CP-VFD-2

31. Vibration Transmitter GCS-VT-1

8. Engineering Drawings

	DWG. NO.	Description	SHTS
1.	COVER 1641	Cover Sheet	1/1
2.	ME-010-0089	Gas Compression System P&ID	1/3,2/3,3/3
3.	PA-002-0348	Control Panel	1/2,2/2
4.	EE-003-0301	480 V 3 Phase Elementary Elec.	1/1
5.	EE-005-0342	120 V & Instrumentation Elem.	1/3,2/3,3/3
6.	EE-018-0129	Interconnection Wiring	1/1
7.	PA-001-0637	Gas Compression System Top Assembly	1/1
2.	PA-001-0675	CSF Top Assembly – 4” Aux	1/1

INTRODUCTION

We at PEI feel that you have purchased the finest Gas Compression System possible. Given proper care and maintenance, this system will provide you with many years of service and will be instrumental in helping you to reach your energy goals.

Only the finest components were used in the construction of your equipment. In order to maintain its quality, we recommend that you use only those parts approved by the PEI Service Staff when replacing components on your system. Remember, you own the best system available in today's market - it is our goal to keep it that way.

Before you operate your equipment read this manual thoroughly. If you have any questions please call our service engineers at (417) 256-2002. A thorough understanding of the operation and maintenance of your equipment is imperative to insure its successful operation.

This manual is for the sole use of the purchaser and/or his employees and servicemen. This manual or any part of it cannot be copied or distributed to persons not directly responsible for the maintenance and operation of this Equipment.

WARRANTY

PEI warrants its System to be free from defects in materials and labor for a period of one year after being placed in service or eighteen months from date of shipment whichever occurs first.

All of the components not manufactured by PEI carry their own manufacturer's warranty. In no way does PEI warranty override, supersede, or limit those warranties. With respect to products, parts and work not manufactured or performed by PEI, PEI's only obligation shall be to assign to Purchaser, to the extent possible, whatever warranty PEI receives from the original Manufacturer. PEI will attempt to aid the Purchaser in obtaining replacement parts or repair of the component as outlined in our Service Policy. The liability of PEI shall not, in any case, exceed the cost of correcting the defect in the component and PEI shall not be liable for indirect or consequential damages as a result of any component failure.

PEI warrants only the cost of parts and labor for repair of design and/or workmanship defects, and is not responsible for any damage and/or loss caused by the system to any personal or real property. PEI is not responsible for premature wear or failure of gas train components caused by hydrogen sulfide in excess of 1500 ppm, or chlorinated hydrocarbons in excess of 35 ppm. PEI is not responsible for any special, direct, indirect, or consequential damage or loss of income or saving due to down time on other components, which rely on the System.

PEI's warranty shall not apply if damage results from mis-adjustment, abuse, inadequate maintenance, accident, or improper service or installation.

This warranty does not include reimbursement of any costs for shipping the product or parts to PEI facility or local designated service establishment, or for labor and/or material required for removal or reinstallation of a product in connection with a warranty repair. In no event shall PEI be liable for cost of labor for replacement or repair of defective parts when the unit has been in the possession of the Purchaser for a period longer than one year.

This warranty is in lieu of all other warranties, expressed or implied, including warranties of merchantability or fitness for a particular purpose, any legal implied warranty of fitness, merchantability or otherwise applicable to this product shall be limited in duration to the minimum period already set forth. This warranty gives the Purchaser specific legal rights; you may also have other rights, which vary from state to state. Any claim by the Purchaser shall be submitted to PEI in writing during the warranty period.

Product(s) Description	Shipment Date	Start-Up Date
Gas Compression System	14 Jun 11	31 Oct 11
Other Related Components	14 Jun 11	31 Oct 11
O&M Manuals (6ea Vol 1/1)	18 Nov 11	

SERVICE POLICY

If repair service is required during the Warranty period, the Purchaser should first call PEI's Service Department and explain the nature of the problem. If the problem is minor, and the Purchaser is willing and able to correct it, then PEI will supply instructions. If this process is unable to correct the problem, then a service technician should be contacted by the Purchaser to do the repair work. PEI will supply maintenance instruction as needed, by phone. If the problem is determined by PEI to be related to the design or workmanship of the system, then PEI will pay reasonable, pre-approved, charges for material and labor for repair. The Purchaser shall pay the technician directly, and submit a warranty claim to PEI for reimbursement of materials and labor. In all other cases, the Purchaser is responsible for labor costs.

In the case of component failure, PEI will aid the Purchaser by providing the required part the same day (if in stock). An invoice for the part and shipping will be sent with the part. The Purchaser returns the defective part either to the original manufacturer or to PEI (depending on the circumstances) for determination of the cause of failure. An RGA (Returned Goods Authorization) number will be issued, which must appear on the return shipping label. If the part proves defective and is covered by the original manufacturers warranty, then the Purchaser will be credited for the invoice that was sent with the new part, but shall be responsible for the shipping costs.

If the repair service and/or service call is considered by PEI to be normal operation and maintenance/troubleshooting and occurs during the warranty period, PEI billing rates are applicable. The attached Fee Schedule details our service department billing rates.

If repair service is required after the warranty period has expired, the Purchaser is responsible for parts, labor, and shipping costs. PEI Service Department is available during normal business hours at 417-256-2002 to provide assistance with service and maintenance to allow maximum equipment efficiency and service life. See attached Fee Schedule for labor rates.

FEE SCHEDULE

Effective 8/1/09

Labor			**Rate**
Site Service -	Service Tech -	Reg. Rate	$128.00 per hour
		Overtime Rate	$192.00 per hour
	Engineer -	Reg. Rate	$159.00 per hour
		Overtime Rate	$238.50 per hour
Consulting/Troubleshooting Service via phone			$159.00 per hour
Programming Service			$159.00 per hour
Consulting/Engineering			$159.00 per hour
Travel Time			$ 96.00 per hour
Drafting			$ 70.00 per hour

Other Expenses

Mileage Rate	$ .96 per mile
Per diem (meals)	$ 57.00 per day

Other out-of-pocket expenses such as airfare, car rental, lodging, etc. at actual cost + 10%.

HYDROGEN SULFIDE SAFETY

Hydrogen sulfide is a toxic gas that affects the respiratory system. Hydrogen sulfide poisoning is characterized by respiratory failure that can lead to unconsciousness, brain damage, and death.

Should hydrogen sulfide poisoning occur, prompt mouth-to-mouth resuscitation is required to prevent brain damage.

Before attempting to rescue victims of hydrogen sulfide poisoning, take adequate precautions to ensure that you will not also become a victim. Do not assume that you will be able to hold your breath long enough to complete a rescue operation. At higher concentrations a single breath can cause unconsciousness.

Persons entering an environment where hydrogen sulfide may be encountered should be tethered to ensure prompt retrieval in the event of unconsciousness.

If it becomes necessary to work in an atmosphere where the hydrogen sulfide concentration is known to exceed 10 ppm, a breathing device such a Scott Air Pack (Scott Aviation, Lancaster, N.Y.) should be used.

Do not rely on your sense of smell for detecting hydrogen sulfide. The human nose is an unreliable detector as it becomes deadened to smell at concentrations over 10 ppm. Use a reliable device such as a DelMar Scientific's spot check to monitor concentrations.

HYDROGEN SULFIDE TOXICITY TABLE

CONCENTRATION	SYMPTOM
1 ppm	Characteristic Odor
10 ppm	Maximum allowable concentration for 8 hours continuous exposure.
100 ppm	Kills sense of smell in 3 to 15 minutes, may burn eyes and throat.
200 ppm	Kills sense smell instantly, burns eyes and throat.
500 ppm	Lose sense of reason and balance, respiratory failure in 2-15 minutes. Demands prompt resuscitation.
700 ppm	Will become unconscious quickly, breathing stops.
1000 ppm	Instant unconsciousness.
1500 ppm	Equipment Warranty Void

SYSTEM SPECIFICATIONS

Project Number	***1641***
GCS Model Number	*GCS-500-246*

GCS Specifications

Maximum Inlet Vacuum	-40 in w.c.
Maximum Inlet Temperature	100 ºF
Maximum Outlet Pressure	5 psig
Maximum Outlet Temperature	104 ºF
Flow Rate	500 SCFM

Electrical

Incoming Power Requirements	480 VAC, 3 Phase, 3 Wire, 200 Amps
Logic Controller	Automation Direct D2-260 PLC
Operator Interface	C-More 6” Color Touchscreen
Communication	Ethernet, Modem

SYSTEM OPERATION INFORMATION

When the system is in AUTO, the PLC controls the GCS with 4 PID Loops:

1. PRESSURE CONTROL
   The Blower VFD will ramp the Blower to maintain discharge pressure at the outlet of the skid using the outlet pressure transmitter. This pressure setpoint is user changeable and can be entered on the Touchscreen. The VFD starts at a Manual Setpoint and ramps up to the discharge pressure Setpoint.

2. VACUUM CONTROL
   The vacuum applied to the landfill is controlled by the position of the Flare Control Valve (FCV-305). The position will adjust automatically to control the landfill vacuum, measured by PIT-301, to an operator selected Setpoint. This setpoint can be entered on the Touchscreen. This valve position can also be manually set and locked at one position.

3. FLOW CONTROL
   The flow of gas extracted from the landfill is controlled by the position of the Flare Control Valve (FCV-305). The position will adjust automatically to control the gas flow, measured by FE-301, to an operator selected Setpoint. This setpoint can be entered on the Touchscreen. This valve position can also be manually set and locked at one position.

4. COOLER VFD TEMPERATURE CONTROL
   The Cooler VFD will control the Cooler (TX-302) to maintain discharge temperature using the cooler discharge temperature (TIT-303). This Setpoint is user changeable and can be entered on the Touchscreen.

FLARE MODES

The Flare is controlled by its local Control Panel with additional signals sent from the GCS Control Panel when in PEI AUTO mode. The operator must select one of the following modes to run the Flare. This mode is selected by the FLARE CONTROL Switch on the GCS Control Panel. ALL HAND VALVES MUST BE IN THE PROPER POSITION BEFORE STARTING THE FLARE.

1. REMOTE – Gas for the Flare comes from the Flare Blower. The Flare System runs independently of the GCS system. All Flare Alarms and Shutdowns are shown in the Flare Local Control Panel.
2. PEI AUTO – Gas for the Flare comes from the GCS. The GCS sends signals to the Flare Control Panel to Enable Flare Run and Disable the Flare Blower. A signal is sent back to GCS if there is a Flare Shutdown. All Flare Alarms and Shutdowns are shown in the Flare Local Control Panel.

To run the Flare in REMOTE, refer to Flare O&M Manual.

To run the Flare in PEI AUTO, turn switches on the GCS Control Panel

- FLARE CONTROL switch to PEI AUTO
- FLARE SHUTDOWN VALVE switches to AUTO

The Primary Flare will always run when gas is available to flare. The Secondary Flare will turn on additional to the Primary when more gas is available.

DEMISTER

When the system is first started up, the demister should be inspected every couple of days. Isolate the demister, remove the inspection plate, and inspect the bottom for debris to help protect the condensate drain line from plugging. When the system is running at its normal flow rate, make note of the pressure drop across the demister pad. As time goes on and the pad gets dirty, this pressure drop will rise. When the pressure drop reaches twice the original value, the demister pad must be cleaned. Isolate the demister from the gas, remove the top plate, and spray the pad with high-pressure water from the top. If high-pressure water is not available at the site, the pad can be removed out the top of the demister. Spray the pad with high-pressure water in the direction opposite of gas flow. This pad should not have to be replaced.

MASS FLOW

The specific gravity can be manually entered on the Touchscreen or calculated by the PLC. When calculating, the PLC uses the elevation, the inlet gas temperature, and the vacuum analog signals to calculate the $\%H_2O$ in the LFG. Then the PLC uses the analog or manual input values for $\%CO_2$, $\%O_2$, and $\%CH_4$ values and assumes the remainder of the LFG is N_2. If the N_2 calculates to be negative, the PLC will use the manual input of Specific Gravity in the calculation of flow rate (SCFM), and N_2 will read "0.0". This will create a Specific Gravity Calculation Error Alarm on the Touchscreen. If this system does not include a Gas Analysis Cabinet, obtain the manual input values for $\%CO_2$, $\%O_2$, and $\%CH_4$ from a GEMS instrument. Also, in lieu of analog signals, use the various pressure and temperature gauges on the skid and at the Flare for the manual inputs on the Touchscreen.

RUN CLOCK

To run the system continuously, the Start Time must be set to “00.00" and the On Cycle Duration to “1440". When set at these Setpoints, the Off Cycle Duration and Number of Cycles are not used. If the On Cycle Duration is set to less than “1440", the system will cycle on and off according to the settings. Unless the system is set to run continuously, the system will never run between midnight and the Start Time of Day.

INSTRUCTIONS FOR THE GAS COMPRESSION SYSTEM DATA LOG, ALARM & SHUTDOWN REPORTS, & OTHER GENERAL INFORMATION

1. Optimum operating efficiency of your system and health of the gas field is maintained by diligent recording and use of the information contained on the Gas Compression System Data Log.

2. Two (2) sets of blanks for establishing this procedure as well as those for Safety Alarm and Shutdown Reports are provided immediately following these instructions. **These are your <u>MASTER COPIES;</u> you should make copies of these reports as they are needed.**

   1. Complete lines 1 through 3 with your Name, the Date, and the Time that you started taking the readings.

   2. Sky conditions - Write in the sky cover (clear, cloudy, raining, windy, etc.)

   3. Ambient Temperature - Write down the outside temperature. Either use a thermometer on site or call a local source for the information.

   4. Record all the gauges and meters in the order that they are listed.

3. Although this system has been factory tested prior to shipment, variable, site-specific conditions mandate various Setpoint changes to achieve optimum operation and will be made and documented by PEI's Service Representative during his visit for Start-Up and Operator Training.

4. Consistent monitoring, recording, and analyzing changes affecting gas quality from the Gas Compression System Data Log and the Alarm and Shutdown Reports will provide the operator with reliable information with which to make Setpoint adjustments, optimizing system performance to changing conditions.

5. The Setpoint, range, configuration, and other operating parameters for the major control devices incorporated into the design of the system are found in the Operational, Alarm, and Shutdown Setpoints information contained later in this section, with space provided to document any Setpoint changes or adjustments.

6. By dating and initialing all Setpoint changes in the space provided, you will be able to correlate the affect of your changes with the changing conditions noted in the Gas Compression System Data Log, assuring optimum equipment performance while maintaining the health of the gas field.

7. If you are not familiar with the procedure for making Setpoint changes to the above devices, please consult the applicable manufacturer's literature before proceeding.

NOTE
PLEASE SEE SAMPLE FORMS FOR
GAS COMPRESSION SYSTEM DATA LOG FOLLOWING

GAS COMPRESSION SYSTEM DATA LOG

Project # 1641 Project Name: Buncombe (Max 500 SCFM)

Tester				
Date				
Time				
Sky Conditions				
Ambient Temperature, deg F				
Inlet Temperature, deg F (GCS-TIT-301)				
LFG Vacuum, In WC (GCS-PI-301)				
Demister Filter 301 Delta P (GCS-PDI-301)				
Blower 301 Inlet Valve Position, % Open (GCS-FCV-301)				
BLR-301 Discharge Temperature, deg F (GCS-TIT-302)				
BLR-301 Discharge Pressure, In WC (GCS-PI-302)				
Pre-Cooler (TX-301) Discharge Temperature, deg F (GCS-TI-301)				
Aftercooler (TX-302) Discharge Temperature, deg F (GCS-TIT-303)				
Demister Filter 302 Delta P (GCS-PDI-302)				
Demister Filter 302 Outlet Pressure, psi (GCS-PI-303)				
Total Flow Temperature, deg F (GCS-TIT-304)				
Total Flow Pressure, In WC (GCS-PIT-302)				
Engine Flow Temperature, deg F (GCS-TIT-305)				
Engine Flow Pressure, In WC (GCS-PIT-303)				

* ***PUSH BUTTON***

GAS COMPRESSION SYSTEM DATA LOG

Project # 1641 Project Name: Buncombe (Max 500 SCFM)

YIC-1 From Main Menu Screen				
ANALOG DATA MENU				
* **PROCESS OVERVIEW**				
GCS Inlet Vacuum, In WC				
Flare Flame Temperature, °F				
Engine Flow Temperature, °F				
Engine Flow Pressure, psi				
Total GCS Flow Rate, SCFM				
Total Flare Flow Rate, SCFM				
Engine Flow Rate, SCFM				
* **NEXT**				
GCS Inlet Temperature, °F				
Panel Temperature, °F				
Barometric Pressure, In WC				
Blower Outlet Temperature, °F				
Cooler Outlet Temperature, °F				
CH4, %				
O2, %				
* **BACK**				
* **BACK**				
* **BLOWER MENU**				
* **BLOWER 301**				
Status, Run/Stop				
Hour Meter				
Vibration, In/Sec				
Speed, % Max				
Current, Amps				

* ***PUSH BUTTON***

GAS COMPRESSION SYSTEM DATA LOG

Project # 1641 Project Name: Buncombe (Max 500 SCFM)

* **BACK**				
Outlet Temperature, °F				
Recirc Valve Position, % Closed				
* **BACK**				
* **FLOW MENU**				
* **TOTAL SYSTEM FLOW**				
Flow Delta P, In WC				
Flow Rate, SCFM				
Today's Total Flow, MMSCF				
Total Flow, MMSCF				
Flow Pressure, In WC				
Flow Temperature, °F				
* **RESETTABLE FLOW**				
Resettable Total Flow, MMSCF				
Reset Time				
Reset Date				
* **BACK**				
* **7 DAY FLOW HISTORY**				
Yesterday's Flow, MMSCF				
2 Day's Ago Flow, MMSCF				
3 Day's Ago Flow, MMSCF				
4 Day's Ago Flow, MMSCF				
5 Day's Ago Flow, MMSCF				
6 Day's Ago Flow, MMSCF				
7 Day's Ago Flow, MMSCF				
* **BACK**				
* **14 MONTH FLOW HISTORY**				

* ***PUSH BUTTON***

GAS COMPRESSION SYSTEM DATA LOG

Project # 1641 Project Name: Buncombe (Max 500 SCFM)

Last Month's Flow, MMSCF				
2 Month's Ago Flow, MMSCF				
3 Month's Ago Flow, MMSCF				
4 Month's Ago Flow, MMSCF				
5 Month's Ago Flow, MMSCF				
6 Month's Ago Flow, MMSCF				
7 Month's Ago Flow, MMSCF				
* **NEXT**				
8 Month's Ago Flow, MMSCF				
9 Month's Ago Flow, MMSCF				
10 Month's Ago Flow, MMSCF				
11 Month's Ago Flow, MMSCF				
12 Month's Ago Flow, MMSCF				
13 Month's Ago Flow, MMSCF				
14 Month's Ago Flow, MMSCF				
* **BACK**				
* **BACK**				
* **BACK**				
* **TOTAL FLARE**				
Flow Rate, SCFM				
Today's Total Flow, MMSCF				
Total Flow, MMSCF				
* **RESETTABLE FLOW**				
Resettable Total Flow, MMSCF				
Reset Time				
Reset Date				
* **BACK**				

* ***PUSH BUTTON***

GAS COMPRESSION SYSTEM DATA LOG

Project # 1641 Project Name: Buncombe (Max 500 SCFM)

* **7 DAY FLOW HISTORY**				
Yesterday's Flow, MMSCF				
2 Day's Ago Flow, MMSCF				
3 Day's Ago Flow, MMSCF				
4 Day's Ago Flow, MMSCF				
5 Day's Ago Flow, MMSCF				
6 Day's Ago Flow, MMSCF				
7 Day's Ago Flow, MMSCF				
* **BACK**				
* **14 MONTH FLOW HISTORY**				
Last Month's Flow, MMSCF				
2 Month's Ago Flow, MMSCF				
3 Month's Ago Flow, MMSCF				
4 Month's Ago Flow, MMSCF				
5 Month's Ago Flow, MMSCF				
6 Month's Ago Flow, MMSCF				
7 Month's Ago Flow, MMSCF				
* **NEXT**				
8 Month's Ago Flow, MMSCF				
9 Month's Ago Flow, MMSCF				
10 Month's Ago Flow, MMSCF				
11 Month's Ago Flow, MMSCF				
12 Month's Ago Flow, MMSCF				
13 Month's Ago Flow, MMSCF				
14 Month's Ago Flow, MMSCF				
* **BACK**				
* **BACK**				

* ***PUSH BUTTON***

GAS COMPRESSION SYSTEM DATA LOG

Project # 1641 Project Name: Buncombe (Max 500 SCFM)

* **BACK**				
* **FLARE 1 FLOW**				
Flow Rate, SCFM				
Today's Total Flow, MMSCF				
Total Flow, MMSCF				
Flare Hour Meter, Hrs				
* **RESETTABLE FLOW**				
Resettable Total Flow, MMSCF				
Reset Time				
Reset Date				
* **BACK**				
* **7 DAY FLOW HISTORY**				
Yesterday's Flow, MMSCF				
2 Day's Ago Flow, MMSCF				
3 Day's Ago Flow, MMSCF				
4 Day's Ago Flow, MMSCF				
5 Day's Ago Flow, MMSCF				
6 Day's Ago Flow, MMSCF				
7 Day's Ago Flow, MMSCF				
* **BACK**				
* **14 MONTH FLOW HISTORY**				
Last Month's Flow, MMSCF				
2 Month's Ago Flow, MMSCF				
3 Month's Ago Flow, MMSCF				
4 Month's Ago Flow, MMSCF				
5 Month's Ago Flow, MMSCF				
6 Month's Ago Flow, MMSCF				

* ***PUSH BUTTON***

GAS COMPRESSION SYSTEM DATA LOG

Project # 1641 Project Name: Buncombe (Max 500 SCFM)

7 Month's Ago Flow, MMSCF				
* **NEXT**				
8 Month's Ago Flow, MMSCF				
9 Month's Ago Flow, MMSCF				
10 Month's Ago Flow, MMSCF				
11 Month's Ago Flow, MMSCF				
12 Month's Ago Flow, MMSCF				
13 Month's Ago Flow, MMSCF				
14 Month's Ago Flow, MMSCF				
* **BACK**				
* **BACK**				
* **BACK**				
* **FLARE 2 FLOW**				
Flow Rate, SCFM				
Today's Total Flow, MMSCF				
Total Flow, MMSCF				
Flare Hour Meter, Hrs				
* **RESETTABLE FLOW**				
Resettable Total Flow, MMSCF				
Reset Time				
Reset Date				
* **BACK**				
* **7 DAY FLOW HISTORY**				
Yesterday's Flow, MMSCF				
2 Day's Ago Flow, MMSCF				
3 Day's Ago Flow, MMSCF				
4 Day's Ago Flow, MMSCF				

* ***PUSH BUTTON***

GAS COMPRESSION SYSTEM DATA LOG

Project # 1641 Project Name: Buncombe (Max 500 SCFM)

5 Day's Ago Flow, MMSCF				
6 Day's Ago Flow, MMSCF				
7 Day's Ago Flow, MMSCF				
* **BACK**				
* **14 MONTH FLOW HISTORY**				
Last Month's Flow, MMSCF				
2 Month's Ago Flow, MMSCF				
3 Month's Ago Flow, MMSCF				
4 Month's Ago Flow, MMSCF				
5 Month's Ago Flow, MMSCF				
6 Month's Ago Flow, MMSCF				
7 Month's Ago Flow, MMSCF				
* **NEXT**				
8 Month's Ago Flow, MMSCF				
9 Month's Ago Flow, MMSCF				
10 Month's Ago Flow, MMSCF				
11 Month's Ago Flow, MMSCF				
12 Month's Ago Flow, MMSCF				
13 Month's Ago Flow, MMSCF				
14 Month's Ago Flow, MMSCF				
* **BACK**				
* **BACK**				
* **BACK**				
* **ENGINE FLOW**				
Flow Rate, SCFM				
Today's Total Flow, MMSCF				
Total Flow, MMSCF				

* ***PUSH BUTTON***

GAS COMPRESSION SYSTEM DATA LOG

Project # 1641 Project Name: Buncombe (Max 500 SCFM)

Flow Temperature, °F				
Flow Delta P, In WC				
Flow Pressure, In WC				
* **RESETTABLE FLOW**				
Resettable Total Flow, MMSCF				
Reset Time				
Reset Date				
* **BACK**				
* **7 DAY FLOW HISTORY**				
Yesterday's Flow, MMSCF				
2 Day's Ago Flow, MMSCF				
3 Day's Ago Flow, MMSCF				
4 Day's Ago Flow, MMSCF				
5 Day's Ago Flow, MMSCF				
6 Day's Ago Flow, MMSCF				
7 Day's Ago Flow, MMSCF				
* **BACK**				
* **14 MONTH FLOW HISTORY**				
Last Month's Flow, MMSCF				
2 Month's Ago Flow, MMSCF				
3 Month's Ago Flow, MMSCF				
4 Month's Ago Flow, MMSCF				
5 Month's Ago Flow, MMSCF				
6 Month's Ago Flow, MMSCF				
7 Month's Ago Flow, MMSCF				
* **NEXT**				
8 Month's Ago Flow, MMSCF				

* ***PUSH BUTTON***

GAS COMPRESSION SYSTEM DATA LOG

Project # 1641 Project Name: Buncombe (Max 500 SCFM)

9 Month's Ago Flow, MMSCF				
10 Month's Ago Flow, MMSCF				
11 Month's Ago Flow, MMSCF				
12 Month's Ago Flow, MMSCF				
13 Month's Ago Flow, MMSCF				
14 Month's Ago Flow, MMSCF				
* **BACK**				
* **BACK**				
* **BACK**				
* **BACK**				
* **COOLER DATA**				
Status, Run/Stop				
Hour Meter				
Speed, % Max				
Outlet Temperature, °F				
* **BACK**				
* **FLARE TEMPERATURE DATA**				
Pilot Temperature, °F				
Flame Temperature, °F				
* **BACK**				
* **AVERAGES**				
* **AVERAGING SETPOINTS**				
AVG Timer				
Filter Factor				
* **BACK**				
* **FLOW AVERAGES**				
AVG Engine Flow, SCFM				

* ***PUSH BUTTON***

GAS COMPRESSION SYSTEM DATA LOG

Project # 1641 Project Name: Buncombe (Max 500 SCFM)

AVG Available Flow, SCFM				
Engine Flow, SCFM				
Available Flow, SCFM				
Available Vacuum, In WC				
* **BACK**				
* **BACK**				
* **ANALOG**				
AI-1, CH 1				
AI-1, CH 2				
AI-1, CH 3				
AI-1, CH 4				
AI-1, CH 5				
AI-1, CH 6				
AI-1, CH 7				
AI-1, CH 8				
* **NEXT**				
AI-2, CH 1				
AI-2, CH 2				
AI-2, CH 3				
AI-2, CH 4				
AI-2, CH 5				
AI-2, CH 6				
AI-2, CH 7				
AI-2, CH 8				
* **NEXT**				
AI-3, CH 1				
AI-3, CH 2				

* ***PUSH BUTTON***

GAS COMPRESSION SYSTEM DATA LOG

Project # 1641 Project Name: Buncombe (Max 500 SCFM)

AI-3, CH 3				
AI-3, CH 4				
AI-3, CH 5				
AI-3, CH 6				
AI-3, CH 7				
AI-3, CH 8				
* **NEXT**				
AO-1, CH 1				
AO-1, CH 2				
AO-1, CH 3				
AO-1, CH 4				
AO-1, CH 5				
AO-1, CH 6				
AO-1, CH 7				
AO-1, CH 8				
* **BACK**				
* **BACK**				
* **BACK**				
* **BACK**				

* ***PUSH BUTTON***

NOTE
PLEASE SEE SAMPLE FORMS FOR
SAFETY ALARM & SHUTDOWN TEST REPORT FOLLOWING

ALARM AND SHUTDOWN ANNUNCIATION TEST REPORT

ADRESS	DESCRIPTION	INITIALS	COMMENTS
C0	[GCS] High Inlet Vacuum AL		
C2	[GCS] Inlet VLV Failed Closed SD		
C10	[FLR 1] Low Flow Rate AL		
C11	[FLR 1] Low Flame Temp AL		
C14	[FLR 1] Start Freq AL		
C22	[FLR 2] Low Flow Rate AL		
C26	[FLR 2] Start Freq AL		
C46	[GCS] SP Grav Calc AL		
C50	[GCS] Low Methane AL		
C100	[GCS] High Inlet Vacuum SD		
C110	[FLR 1] Low Flow Rate SD		
C111	[FLR 1] Low Flame Temp Restart		
C114	[FLR 1] Pilot Fail Restart		
C116	[FLR 1] Flame Fail SD		
C117	[FLR 1] Selected TC Fail SD		
C201	[Engine] Low Flow Pressure AL		
C216	[BLR 301] Low Amp AL		
C263	[Cntrl Pnl] Low Temp AL		
C270	[GasCooler 301] Low Outlet Temp AL		
C316	[BLR 301] Low Amp SD		
C322	[BLR 301] VFD 1 Run Sig Fail SD		
C362	[FLR 1] SD Vlv Failed Closed SD		
C363	[FLR 2] SD Vlv Failed Closed SD		
C371	[GasCooler 301] Run Sig Fail SD		
C400	[GCS] Run Clock Off AL		
C410	[GCS] GAC Fault AL		
C430	Any Engine Fail AL		
C431	[Engine 1] Alarm		
C460	[FLR 1] Pilot TC Fail SD		
C461	[FLR 1] Flame TC Fail SD		
C500	[BLR 301] VFD Fault SD		
C504	[GasCooler 301] VFD Fault SD		
C520	[GCS] No Flow Condition SD		
C1001	[GCS] High Inlet Temp AL		
C1002	[GCS] Inlet VLV Failed Open AL		
C1010	[FLR 1] High Flow Rate AL		
C1011	[FLR 1] High Flame Temp AL		
C1022	[FLR 2] High Flow Rate AL		
C1047	[GCS] High Oxygen AL		
C1070	[FLT 302] High BTM Cond Lvl AL		
C1073	[FLT 302] High TOP Cond Lvl AL		
C1101	[GCS] High Inlet Temp SD		
C1147	[GCS] High Oxygen SD		

ALARM AND SHUTDOWN ANNUNCIATION TEST REPORT

C1165	[FLT 301] High Cond Lvl SD		
C1200	[Engine] High Flow Temp AL		
C1201	[Engine] High Flow Pressure AL		
C1202	[Engine] High Flow Rate AL		
C1215	[BLR 301] High Vibration AL		
C1216	[BLR 301] High Amp AL		
C1221	[BLR 301] High Outlet Temp AL		
C1263	[Cntrl Pnl] High Temp AL		
C1270	[GasCooler 301] High Outlet Temp AL		
C1300	[Engine] High Flow Temp SD		
C1301	[Engine] High Flow Pressure SD		
C1302	[Engine] High Flow Rate SD		
C1315	[BLR 301] High Vibration SD		
C1316	[BLR 301] High Amp SD		
C1321	[BLR 301] High Outlet Temp SD		
C1362	[FLR 1] SD Vlv Failed Open SD		
C1363	[FLR 2] SD Vlv Failed Open SD		

NOTE
PLEASE SEE SAMPLE FORMS FOR
GAS COMPRESSION SYSTEM SETPOINTS FOLLOWING

GAS COMPRESSION SYSTEM SETPOINTS

All Setpoints depend on landfill Vacuum and Flow

Project # 1641 Project Name: Buncombe Initials: _____.

Description	Setpoint	Setpoint	Setpoint	Setpoint
DATE				
Setpoint Menu				
* **PID CONTROL**				
* **VACUUM/FLOW CONTROL**				
* **MANUAL/AUTO**				
Manual Valve Position				
* **VACUUM CONTROL**				
* **SETPOINTS**				
Setpoint				
Ramp Incriment				
* **BACK**				
* **PID SETPOINTS**				
Gain				
Sample Rate				
Derivative				
Reset				
Deadband				
* **BACK**				
* **PID MONITOR**				
Control Mode				
* **BACK**				
* **BACK**				
* **FLOW CONTROL**				
* **SETPOINTS**				
Flow Control Setpoint				
* **BACK**				
* **PID SETPOINTS**				
Gain				

GAS COMPRESSION SYSTEM SETPOINTS

All Setpoints depend on landfill Vacuum and Flow

Project # 1641 Project Name: Buncombe Initials: _____.

Sample Rate				
Derivative				
Reset				
Deadband				
* **BACK**				
* **PID MONITOR**				
Control Mode				
* **BACK**				
* **BACK**				
* **BACK**				
* **PRESSURE CONTROL**				
* **SETPOINTS**				
Pressure Control Setpoint				
* **BACK**				
* **PID SETPOINTS**				
Gain				
Sample Rate				
Derivative				
Reset				
Deadband				
* **BACK**				
* **PID MONITOR**				
* **BACK**				
Manual Speed				
* **BACK**				
* **COOLER CONTROL**				
* **SETPOINTS**				
Cooler Setpoint				
Stop Cooler Temperature Differential				

GAS COMPRESSION SYSTEM SETPOINTS

All Setpoints depend on landfill Vacuum and Flow

Project # 1641 Project Name: Buncombe Initials: _____.

Start Cooler Temperature				
Stop Cooler Temperature				
* **BACK**				
* **PID SETPOINTS**				
Gain				
Sample Rate				
Derivative				
Reset				
Deadband				
* **BACK**				
* **PID MONITOR**				
* **BACK**				
Manual Speed				
* **BACK**				
* **REHEAT VALVE CONTROL**				
* **SETPOINTS**				
Temperature Control Setpoint				
* **BACK**				
* **PID SETPOINTS**				
Gain				
Sample Rate				
Derivative				
Reset				
Deadband				
* **BACK**				
* **PID MONITOR**				
* **BACK**				
Manual Position				
* **BACK**				

GAS COMPRESSION SYSTEM SETPOINTS

All Setpoints depend on landfill Vacuum and Flow

Project # 1641 Project Name: Buncombe Initials: _____.

* **BACK**				
* **FLARE MENU**				
* **FLARE 1 START SETPOINTS**				
Pilot Enable				
Delay Shutdown Valve Open				
Conditional Start Delay				
Conditional Stop Delay				
Flare Pilot Assumed on Above this Temperature				
Vacuum Needed to Start Flare				
* **BACK**				
* **FLARE 2 START SETPOINTS**				
Start Flare 2 when Flare 1 is at or above this Flow				
Conditional Start Delay				
Conditional Stop Delay				
* **BACK**				
* **BACK**				
* **FLARE RUN CLOCK**				
Start Time of Day				
On Cycle Duration				
Off Cycle Duration				
Cycles Per Day				
* **HELP**				
* **BACK**				
* **SET CLOCK**				
Minute				
Hour				
Day				
Month				
Year				

GAS COMPRESSION SYSTEM SETPOINTS

All Setpoints depend on landfill Vacuum and Flow

Project # 1641 Project Name: Buncombe Initials: _____.

* **BACK**				
* **BACK**				
* **ALARMS & SHUTDOWNS**				
* **INLET MENU**				
* **HIGH VACUUM**				
Alarm Setpoint				
Alarm Delay				
Shutdown Setpoint				
Shutdown Delay				
* **BACK**				
* **INLET TEMPERATURE**				
Alarm Setpoint				
Alarm Delay				
Shutdown Setpoint				
Shutdown Delay				
* **BACK**				
* **BACK**				
* **BLOWER MENU**				
* **VIBRATION**				
Alarm Setpoint				
Alarm Delay				
Shutdown Setpoint				
Shutdown Delay				
* **BACK**				
* **OUTLET TEMPERATURE**				
Alarm Setpoint				
Alarm Delay				
Shutdown Setpoint				
Shutdown Delay				

GAS COMPRESSION SYSTEM SETPOINTS

All Setpoints depend on landfill Vacuum and Flow

Project # 1641 Project Name: Buncombe Initials: _____.

* **BACK**				
* **HIGH AMPS**				
Alarm Setpoint				
Alarm Delay				
Shutdown Setpoint				
Shutdown Delay				
* **BACK**				
* **LOW AMPS**				
Alarm Setpoint				
Alarm Delay				
Shutdown Setpoint				
Shutdown Delay				
* **BACK**				
* **BACK**				
* **COOLER MENU**				
* **LOW OUTLET TEMPERATURE**				
Alarm Setpoint				
Alarm Delay				
* **BACK**				
* **HIGH OUTLET TEMPERATURE**				
Alarm Setpoint				
Alarm Delay				
* **BACK**				
* **BACK**				
* **FLARE MENU**				
* **FLARE 1 LOW FLOW RATE**				
Alarm Setpoint				
Alarm Delay				
Shutdown Setpoint				

GAS COMPRESSION SYSTEM SETPOINTS

All Setpoints depend on landfill Vacuum and Flow

Project # 1641 Project Name: Buncombe Initials: _____.

Shutdown Delay				
* **BACK**				
* **FLARE 1 HIGH FLOW RATE**				
Alarm Setpoint				
Alarm Delay				
* **BACK**				
* **FLARE 1 START FREQUENCY**				
Minutes				
Number of Starts				
* **BACK**				
* **FLARE 2 LOW FLOW RATE**				
Alarm Setpoint				
Alarm Delay				
* **BACK**				
* **FLARE 2 HIGH FLOW RATE**				
Alarm Setpoint				
Alarm Delay				
* **BACK**				
* **FLARE 2 START FREQUENCY**				
Minutes				
Number of Starts				
* **BACK**				
* **HIGH FLAME TEMPERATURE**				
Alarm Setpoint				
Alarm Delay				
* **BACK**				
* **LOW FLAME TEMPERATURE**				
Alarm Setpoint				
Alarm Delay				

GAS COMPRESSION SYSTEM SETPOINTS

All Setpoints depend on landfill Vacuum and Flow

Project # 1641 Project Name: Buncombe Initials: _____.

Shutdown Restart				
Restart Delay				
* **BACK**				
* **FLARE RELIGHT**				
Relight Delay				
Number of Relight Attempts				
* **BACK**				
* **BACK**				
* **ENGINE MENU**				
* **HIGH FLOW PRESSURE**				
Alarm Setpoint				
Alarm Delay				
Shutdown Setpoint				
Shutdown Delay				
* **BACK**				
* **LOW FLOW PRESSURE**				
Alarm Setpoint				
Alarm Delay				
Delay Alarm on Initial System Start				
* **BACK**				
* **HIGH FLOW TEMPERATURE**				
Alarm Setpoint				
Alarm Delay				
Shutdown Setpoint				
Shutdown Delay				
* **BACK**				
* **HIGH FLOW RATE**				
Alarm Setpoint				
Alarm Delay				

GAS COMPRESSION SYSTEM SETPOINTS

All Setpoints depend on landfill Vacuum and Flow

Project # 1641 Project Name: Buncombe Initials: _____.

Shutdown Setpoint				
Shutdown Delay				
* **BACK**				
* **BACK**				
* **GAC MENU**				
* **HIGH OXYGEN**				
Alarm Setpoint				
Alarm Delay				
Shutdown Setpoint				
Shutdown Delay				
* **BACK**				
* **LOW METHANE**				
Alarm Setpoint				
Alarm Delay				
* **BACK**				
* **BACK**				
* **CONDENSATE**				
* **FLT-301 CONDENSATE LEVEL**				
Shutdown Delay				
* **BACK**				
* **FLT-302 CONDENSATE LEVEL**				
Bottom Alarm Delay				
Top Alarm Delay				
* **BACK**				
* **BACK**				
* **PANEL TEMP**				
Low Temp Alarm Setpoint				
Low Temp Alarm Delay				
High Temp Alarm Setpoint				

GAS COMPRESSION SYSTEM SETPOINTS

All Setpoints depend on landfill Vacuum and Flow

Project # 1641 Project Name: Buncombe Initials: _____.

High Temp Alarm Delay				
* **BACK**				
* **NO FLOW CONDITION**				
Shutdown Delay				
* **BACK**				
* **BACK**				
* **FLOW CALCULATION**				
CH4 %				
O2 %				
CO2 %				
Elevation				
Calculated H2O Vapor				
Calculated Nitrogen				
Specific Gravity				
* **FLOW FACTORS**				
Total Delta P				
Bits				
Bit Cutoff				
Engine Delta P				
Bits				
Bit Cutoff				
* **BACK**				
* **BACK**				
* **RECIRCULATION VALVE**				
* **ONE BLOWER**				
Lowest Flow Rate				
Mid Flow Rate				
Higher Flow Rate				
Widest Valve Position				

GAS COMPRESSION SYSTEM SETPOINTS

All Setpoints depend on landfill Vacuum and Flow

Project # 1641 Project Name: Buncombe Initials: _____.

Mid Valve Position				
Narrow Valve Position				
* **BACK**				
Delay Position Change				
Manual Position				
* **BACK**				
* **ANALOG**				
Low Scale				
AI-1, CH1				
AI-1, CH2				
AI-1, CH3				
AI-1, CH4				
AI-1, CH5				
AI-1, CH6				
AI-1, CH7				
AI-1, CH8				
High Scale				
AI-1, CH1				
AI-1, CH2				
AI-1, CH3				
AI-1, CH4				
AI-1, CH5				
AI-1, CH6				
AI-1, CH7				
AI-1, CH8				
* **NEXT**				
Low Scale				
AI-2, CH1				
AI-2, CH2				

GAS COMPRESSION SYSTEM SETPOINTS

All Setpoints depend on landfill Vacuum and Flow

Project # 1641 Project Name: Buncombe Initials: _____.

AI-2, CH3				
AI-2, CH4				
AI-2, CH5				
AI-2, CH6				
AI-2, CH7				
AI-2, CH8				
High Scale				
AI-2, CH1				
AI-2, CH2				
AI-2, CH3				
AI-2, CH4				
AI-2, CH5				
AI-2, CH6				
AI-2, CH7				
AI-2, CH8				
* **NEXT**				
Low Scale				
AO-1, CH1				
AO-1, CH2				
AO-1, CH3				
AO-1, CH4				
AO-1, CH5				
AO-1, CH6				
AO-1, CH7				
AO-1, CH8				
High Scale				
AO-1, CH1				
AO-1, CH2				
AO-1, CH3				

GAS COMPRESSION SYSTEM SETPOINTS

All Setpoints depend on landfill Vacuum and Flow

Project # 1641 Project Name: Buncombe Initials: _____.

AO-1, CH4				
AO-1, CH5				
AO-1, CH6				
AO-1, CH7				
AO-1, CH8				
* **BACK**				
* **BACK**				
* **BACK**				

MAINTENANCE SCHEDULE

FREQUENCY		CHECK
Daily	A.	Fill out the Daily Flare Station Data Log.
	B	Visually inspect unit - repair any breaks, leaks, and loose wires.
	C.	Follow all Manufacturers' Recommendations in Section 7.
	D.	Test Lamps by pushing the RUN Lamp and the ALARM/SHUTDOWN Lamp.
Weekly	A.	Rotate shaft on all blowers that are not in operation.
Two Months	A.	Typically lubricants must be changed out in either quarterly or monthly intervals, however the exact schedule will have to be determined by the end user. See Blower manufacturer's recommendations in Section 7.

Three Months Turn flares off and perform the following procedures:

A. Inspect Ignitor Wiring - Examine the wire which runs between the ignition transformer on the flare and the ignitor in the pilot for frayed, heat damaged, or worn insulation.

B. Check Pilot - With the SYSTEM switch in the "ON" position turn the PILOT switch to the "TEST" position. Verify that the pilot lights and does not blow out. Return the PILOT switch to the "AUTO" position.

C. Check Thermocouple Voltage - After the flare has been off for at least 1 hour, open the breaker, then open the control panel and the swing panel. Locate the appropriate Thermocouple Input Module. Measure the voltage between the red and yellow wires of the flare thermocouples and convert that voltage to temperature using the Type K Thermocouple Chart in Section 6. The readings should be within 25 °F of ambient temperature. Call PEI if a greater discrepancy exists. Close the swing panel and the enclosure door, then close the disconnect.

D. Check Flare Shutdown Valves FV-301 & FV-302 - With the SYSTEM switch in the "ON" position, turn the SHUTDOWN VALVE switch to the "TEST" position. As the valve opens, verify the "OPEN" lamp lights on the Touchscreen. After the valve has reached the full open position, turn the FLARE SHUTDOWN VALVE switch to the "CLOSED" or "AUTO" position and verify that the valve closes in less than 2 seconds. Return the valve switch to the "AUTO" position.

E. Check Blower(s) - Turn the BLOWER switch to the "TEST" position. Verify that the selected blower starts smoothly and operates properly. After the blower has ramped to maximum speed, turn the BLOWER switch to the "AUTO" position and verify that the blower stops properly.

F. Zero out the pressure, delta pressure, and vacuum gauges by closing off the valves in the gas lines to the gauges and opening the valves in the tees to atmosphere. Adjust the zeroing screw until the needle

points to zero.

G. Remove the 8" blind flange inspection port on the demister and remove any debris that has collected.

H. If the pressure drop across the demister reaches two times it's original value, open up the top of the demister and pull out the element. There is a handle at the top that is attached to the demister element. Hose the element down opposite of landfill gas flow with high pressure water and put it back in the demister container.

Annually Shut the Flare down and perform the following checks:

A. Check for loose bolts on the structure and at the flanges.

TROUBLESHOOTING ALARM AND SHUTDOWN ANNUNCIATION

Problem	Cause	Solution
High Flame Temp Alarm.	**1)**. Flare Temp SP is set too high. **2)**. Thermocouple wire is broken or faulty thermocouple.	**1)**. Check the setpoint and adjust accordingly. **2)**. Check voltage at the terminal blocks and refer to the Type 'K' thermocouple chart in Section 6. Replace if defective.
Low Flare Temp Alarm and Restart.	**1)**. Low Flare Temp Shutdown SP is set too high. **2)**. Methane % is too low. **3)**. Restriction of flow.	**1)**. Lower this Setpoint. It should be approx. 200 ºF. **2)**. Make adjustments to the landfill wells to increase the gas quality. **3)**. Check valving for proper positioning or condensate blockage.
Flare Pilot Fail Restart.	**1)**. Out of Fuel. **2)**. Lack of ignition. **3)**. Pilot solenoid not opening correctly. **4)**. Relay output module has failed.	**1)**. Switch propane tanks. Refill spare. **2)**. Check spark plug and regap. Check ignition transformer. Check ignitor spark plug wire ends for corrosion. **3)**. Replace or rebuild pilot solenoid. **4)**. Replace module.
Flare Flame Fail Shutdown.	**1)**. Low methane quality. **2)**. Restriction of flow.	**1)**. Tune landfill. **2)**. Check valving for proper positioning or condensate blockage.
Inlet Valve Failed Open Alarm.	**1)**. Shutdown valve not closing properly. **2)**. Limit switches out of range. **3)**. Actuator linkage failed.	**1)**. Valve sticking or blocked open. **2)**. Adjust limit switches. **3)**. Replace if adjustment doesn't work.
Flare Shutdown Valve Failed Open Shutdown.	**1)**. Shutdown valve not closing properly. **2)**. Limit switches out of range. **3)**. Actuator linkage failed.	**1)**. Valve sticking or blocked open. **2)**. Adjust limit switches. **3)**. Replace if adjustment doesn't work.

Inlet Valve Failed Closed.	**1)**. Shutdown valve not opening properly. **2)**. Limit switches out of range. **3)**. Actuator linkage failed.	**1)**. Valve sticking or blocked closed. **2)**. Adjust limit switches. **3)**. Replace if adjustment doesn't work.
Flare Shutdown Valve Failed Closed Shutdown.	**1)**. Shutdown valve not opening properly. **2)**. Limit switches out of range. **3)**. Actuator linkage failed.	**1)**. Valve sticking or blocked closed. **2)**. Adjust limit switches. **3)**. Replace if adjustment doesn't work.
No Flow Condition Shutdown.	**1)**. No flow to end users. **2)**. No flow signal from transmitter.	**1)**. Verify valves are open on system and pipeline. **2)**. Verify transmitter valves are correct. Verify current signal from transmitter. Faulty analog input module.
Flare High Flow Rate Alarm.	**1)**. Flare flow rate below system's "High Flow Setpoints". **2)**. Break in pipe or malfunctioning valve.	**1)**. Adjust flow to lower flow rate or higher "High Flow Setpoints. (Do not operate above manufacturer's designed flow rate.) **2)**. Check valving for proper positioning or pipe.
VFD Fault Shutdown.	**1)**. Variable Frequency Drive in fault state.	**1)**. Refer to Section 7-30 in this manual under troubleshooting faults.
High Demister Condensate Level Alarm & Shutdown.	**1).** Condensate is at or above these levels. **2).** Faulty level switches. **3).** If system includes pump, open or tripped breaker.	**1).** Blockage. Clean out bottom of demister or piping. **2).** Replace faulty level switches. **3).** Close or reset breaker.
Low Flare Flow Alarm and Shutdown.	**1)**. Flare flow rate below system's "Low Flow Setpoints". **2)**. Restriction of flow.	**1)**. Adjust flow to higher flow rate or lower "Low Flow Setpoints. (Do not operate below manufacturer's designed flow rate.) **2)**. Check valving for proper positioning or condensate blockage.

High Inlet Vacuum Alarm and Shutdown.	**1).** Landfill wells not opened sufficiently. **2).** Condensation blocking inlet. **3).** Operating system out of designed range.	**1).** Open wells. **2).** Pump out remote knockout vessels. **3).** Adjust flowrate or vacuum setpoint within ranges for proper landfill tuning.
Low Control Panel Temperature Alarm	**1).** Breaker is off or tripped. **2).** Heater is faulty.	**1).** Reset breaker. Turn on. **2).** Replace heater.
High Control Panel Temperature Alarm	**1).** Heater setting is too high. **2).** Air conditioner thermostat setting too high. **3).** Breaker is off or tripped	**1).** Setting needs to be turned down during summer months. **2).** Setting needs to be turned down during summer months. **3).** Reset breaker. Turn on.
Run Clock Off Alarm	**1).** System Start/Stop parameters set to operate on a timed schedule.	**1).** System Start/Stop parameters have been modified for ON/OFF operations. Refer to the Touchscreen (Help menu under Run Clock operations) or Section 4 in this manual under System Operation Information, Section K.
Specific Gravity Calculation Error Alarm.	**1).** Operator input value out of range.	**1).** Check your input selections. The total of all inputs cannot exceed 100%.
VFD Run Signal Fail Shutdown.	**1).** VFD Input selection. **2).** VFD is Off.	**1).** Make sure that VFD is set to remote input, not direct. **2).** Close VFD Disconnect.
Flare 1 Thermocouple Fail Shutdown.	**1).** Thermocouple or Input Module Failure.	**1).** Check Thermocouple wire for correct voltage. Replace faulty device.
Flare Selected Thermocouple Fail Shutdown.	**1).** Selected controlling Thermocouple or Input Module Failure.	**1).** Check Thermocouple wire for correct voltage. Replace faulty device. Change to different controlling Thermocouple. Then change temperature value setpoint.

Blower High Vibration Alarm and Shutdown.	**1).** Blower/Motor Coupling Alignment. **2).** Blower/Motor Bearings. **3).** Blower/Motor.	**1).** Check alignment, correct as necessary. **2).** Refer to Section 7-2 in this manual for Manufacturer's troubleshooting literature. **3).** Make sure that devices are mounted securely to base frame.
High Biogas % Oxygen Alarm & Shutdown	**1).** Alarm & Shutdown setpoint set too low. **2).** Broken pipe/Loose flanges. **3).** Overdrawing well field.	**1).** Adjust setpoints. **2).** Repair piping, tighten flanges. **3).** Adjust wells.
High Inlet Temperature Alarm & Shutdown	**1).** Faulty T/C or module. **2).** Alarm & Shutdown setpoint set too high.	**1).** Replace T/C or module. **2).** Adjust setpoints.
Low Biogas % CH_4 Alarm & Shutdown	**1).** Alarm & Shutdown setpoint set too low. **2).** Broken pipe/Loose flanges. **3).** Overdrawing well field.	**1).** Adjust setpoints. **2).** Repair piping, tighten flanges. **3).** Adjust wells.
Low Flow Pressure Alarm	**1).** VFD is in manual mode. **2).** Valve or valves are closed. **3).** Alarm & Shutdown setpoints set too high.	**1).** Change Man/Auto control to "AUTO". Check "Start Auto Control Below Setpoint". Adjust setpoint to a greater value. **2).** Open or adjust for proper flows. **3).** Adjust setpoints.
Engine High Flow Temperature Alarm & Shutdown	**1).** Alarm & Shutdown setpoints set too low. **2).** Cooler VFD setpoint out of range.	**1).** Adjust setpoints. **2).** Change Man/Auto control to "AUTO". Check "Start Auto Control Below Setpoint". Adjust setpoint to a greater value.
Engine High Flow Rate Alarm & Shutdown	**1).** Alarm & Shutdown setpoints set too high. **2).** Check for open valves/piping.	**1).** Adjust setpoints. **2).** Replace/repair.

Blower Low Amperage Alarm & Shutdown	**1).** Setpoint is not adjusted properly.	**1).** Lower Alarm & Shutdown setpoints just above Blower surge point.
Blower High Amperage Alarm & Shutdown	**1).** Bearings/impellers. **2).** Motor starter heat pack out of range/faulty. **3).** Bad motor starter	**1).** Grease bearings or replace if needed. Debris in Blower housing or warped impeller. Consult Manufacturer. **2).** Adjust heat pack setting for proper FLA of motor/replace Heat pack. **3).** Replace motor starter
Flare Start Frequency Alarm	**1).** Alarm & Shutdown setpoint set too close to available flow. **2).** Low flare temp setpoint too low.	**1).** Adjust setpoints. **2).** Adjust setpoint.
GAC Fault Alarm	**1).** GAC has fault condition **2).** No power to GAC	**1).** Reset fault at GAC (See manufacturer's literature section 7-8) **2).** Restore GAC power.
High Blower Outlet Temperature Alarm and Shutdown	**1).** Excessive temperature at thermocouple **2).** Setpoints set tool low.	**1).** Check manual valves on blower discharge. **2).** Adjust setpoints. Faulty thermocouple module.
Cooler Low Outlet Temperature Alarm.	**1).** VFD is in manual mode. **2).** Alarm & Shutdown setpoints set too high.	**1).** Change Man/Auto control to "AUTO". Check "Start Auto Control Below Setpoint". Adjust setpoint to a greater value. **2).** Adjust setpoints.
Engine Fail Alarm	**1).** No flow to engines **2).** No flow signal from transmitter.	**1).** Verify valves are open on GHS and pipeline **2).** Verify transmitter valves are correct. Verify current signal from transmitter. Faulty analog input module
Cooler High Outlet Temperature Alarm	**1).** Alarm & Shutdown setpoints set too low. **2).** Cooler VFD setpoint out of range.	**1).** Adjust setpoints. **2).** Change Man/Auto control to "AUTO". Check "Start Auto Control Below Setpoint". Adjust setpoint to a greater value.

Engine High Flow Pressure Alarm & Shutdown	**1).** Check for closed valves/blocked piping. **2).** Alarm/shutdown setpoint set incorrectly.	**1).** Open/repair. **2).** Adjust setpoints.

BLOWER MAINTENANCE

A. REGREASING PROCEDURE
B. SHORT/LONG TERM STORAGE

Re-greasing Procedure

Recommended bi-annually during normal operation or more frequently under abnormal operation conditions such as high speed operation, dirty environment, high pressure and temperature.

Drive End. Refer to Figure 21.

- Allow machine to come to a full stop and lock out (as required).
- Unfasten bearing cap bolts
- Remove old grease from cap
- Move cap towards the coupling to facilitate access to the bearing.
- Inject clean grease into grease "zerk" fitting in the bearing housing while slowly turning the shaft by hand. This will force the old grease through the bearing. Continue to remove the old grease until clean grease has replaced it.
- Hand pack bottom of both caps 1/4 with clean grease, (flush with the edges of the cap, refer to Figure 22).
- Replace and fasten the bearing cap.

Non-Drive End. Refer to Figure 21.

- Unfasten bearing cap bolts
- Remove old grease from cap
- Inject clean grease into grease "zerk" fitting in the bearing housing while slowly turning the shaft by hand. This will force the old grease through the bearing. Continue to remove the old grease until clean grease has replaced it.
- Hand pack bottom of both caps 1/4 with clean grease, (flush with the edges of the cap; refer to Figure 22).
- Replace and fasten the bearing cap.

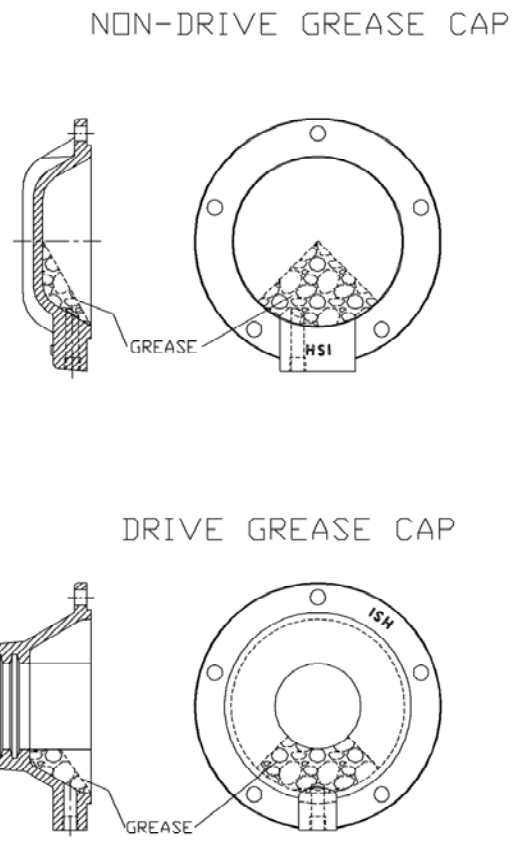

Figure 21. Grease hand packing

After re-greasing, if bearing temperature exceeds recommended temperatures, remove a small amount of grease and re-run.

If the inlet (thrust end) gasket is damaged, replace it with a gasket of the same thickness in order to maintain the thrust.

Grease Quantities

Series	Full Replacement
031	1.6 oz (45 g)
051, 052	3.1 oz (87 g)
061, 081, 082, 086	5.5 oz (154 g)
126	7.2 oz (174 g)

IV. STORAGE - SHORT TERM (UP TO 90 DAYS)

Your cast iron multistage centrifugal blower should be stored in a clean, dry, well ventilated area. Keep equipment covered (canvas preferred over plastic) and out of the elements. The storage area should be heated to prevent condensation. Rotate the blower and motor shaft at least once a week to prevent bearings from taking a set (getting a flat spot) and to keep lubrication evenly distributed in bearing during idle periods. Be sure to keep a log of shaft rotations to ensure machine warranty protection.

V. STORAGE--LONG TERM

Several precautions must be observed when storing equipment for longer than 90 days:

a. Rotate shaft at least once a week and record in appropriate log. **FAILURE TO ROTATE CAN VOID YOUR WARRANTY.**
b. Suspend a bag of silica gel in the inlet and outlet heads to absorb excess moisture. Change bags periodically.
c. Coat exposed machined surfaces (e.g. shaft extensions) with protective grease.
d. Cover inlet and outlet flanges with a protective lid, if required.
e. Energize motor space heater (if provided).

NOTE--All Grease Lubricated Machines are shipped with lubrication in the bearings. On oil lubricated machines, install the oilers and fill to proper level. Periodically drain some oil and check for moisture or contaminants which may have entered the oil over an extended storage period. If evident, drain reservoirs completely and replenish with recommended oil (see page 23).

Be sure to follow the motor manufacturer's instructions to properly maintain the motor during the storage period. Contact HSI factory personnel for any special instructions regarding your particular blower equipment.

RECOMMENDED SPARE PARTS LIST FOR FLARE STATION

JOB #1641 Buncombe County

Device	Part Number	Reference Designator
CPU	3592	CP-PLC-1
Analog Input Module	969	CP-AI-1..3
Analog Output Module	3583	CP-AO-1
Digital Input Module	446	CP-DI-1
Digital Input Module	4712	CP-DI-2
Fuses	5777	CP-FU-1..15
Power Supply	1702	CP-E/E-1
Relay Module	468	CP-RM-1..2
Surge Arrester	129	CP-SSR-1
Surge Arrester	469	CP-SSR-2
Surge Arrester	470	CP-SSR-3
Surge Arrester	471	CP-SSR-4
Vibration Transmitter	6771	GCS-VT-1

SUPPLIED SPARE PARTS LIST FOR FLARE STATION

Device	Part Number	Reference Designator
Analog Input Module	969	CP-AI-1..3
Analog Output Module	3583	CP-AO-1
Digital Input Module	446	CP-DI-1
Digital Input Module	4712	CP-DI-2
Digital Input Module	4712	CP-DI-2
Relay Module	468	CP-RM-1..2
Blower Bearing Kit	6525	GCS-BLR-301
Blower Grease	6526	GCS-BLR-301
Coalescing Filter	6630	GCS-FLT-302
Level Switch	6663	GCS-LS-701..3

SERIAL NUMBER DATA SHEET

Proj. # 1641 **Proj. Name: Buncombe Co.**

Device	Ref. Des.	Manufacturer	Model No.	Serial No.
Air Conditioner	AC-1	Bard	W12A1-A00-B-XXXXJ	330C112785940-01
Landfill Gas Blower	BLR-301	HSI (s.o. 31802)	5108	710768
Actuator	FLR-FV-301	ABZ	SR20	
Actuator	FLR-FV-302	ABZ	SR10	
Actuator	FV-301	Elomatic	EL350	246775
Actuator	FCV-302	Elomatic	EL100-MOD-XP	259570
Actuator	FCV-303	Elomatic	ELQ200-9.6-QMOD-XP	207333
Actuator	FCV-304	Elomatic	ELQ200-9.6-QMOD-XP	207334
Actuator	FCV-305	Elomatic	ELQ100-9.6-QMOD-XP	257573
Flow Element (4")	FE-301	Veris	V100-05-H-M	V17958-01.1
Flow Element (4")	FE-302	Veris	V100-05-H-M	V17958-01.2
Gas Analyzer	GAC-301	Siemens	Model 23	JR-3172
Pressure Transmitter (0-4"wc)	PDT-301	Rosemount	2051CD1A02A1AB2E5H2D4Q4	41892
Pressure Transmitter (0-4"wc)	PDT-302	Rosemount	2051CD1A02A1AB2E5H2D4Q4	41893
Pressure Transmitter (0-80"wc)	PIT-301	Rosemount	2051CD2A02A1AB2E5M5H2D4Q4	41681
Pressure Transmitter (0-10 psig)	PIT-302	Rosemount	2051CD3A02A1AB2E5M5H2D4Q4	41683
Pressure Transmitter (0-10psig)	PIT-303	Rosemount	2051CD3A02A1AB2E5M5H2D4Q4	41682
Temperature Transmitter	TIT-301	Rosemount	644HAE5XAJ6M5F6Q4	282172
Temperature Transmitter	TIT-302	Rosemount	644HAE5XAJ6M5F6Q4	282173
Temperature Transmitter	TIT-303	Rosemount	644HAE5XAJ6M5F6Q4	282171
Temperature Transmitter	TIT-304	Rosemount	644HAE5XAJ6M5F6Q4	282170

Temperature Transmitter	TIT-305	Rosemount	644HAE5XAJ6M5F6Q4	282174
Flame Arrester	TSE-301	Varec	5010-4-1	
Heat Exchanger	TX-301	ITT	C200 08036	
Heat Exchanger	TX-302	Air-X-Limited	48VVF	108301
Variable Frequency Drive	VFD-1	ABB	ACS550-U1-059A-4	2110301512
Variable Frequency Drive	VFD-2	ABB	ACS550-U1-06A9-4	2110800166

PERENNIAL ENERGY INC.
WEST PLAINS, MO. 65775

MODEL: GCS-500-246
SERIAL: GCS-1641
DATE OF MFG: 05/11
MAX. FLOW RATE: 500 SCFM

GAS TYPE: LANDFILL

PERENNIAL ENERGY INC.
WEST PLAINS, MO. 65775

MODEL: CP-1 TYPE1
SERIAL: CP-1641
DATE OF MFG: 05/11
VOLTAGE: 480V / 3PH
AMPACITY: 200A
SHORT CIRCUIT RATING: 65 kA.I.C.

THERMOCOUPLE MILLIVOLTS TO DEG F CONVERSION CHART, TYPE E

Revised Thermocouple Reference Tables

TYPE E

Reference Tables
N.I.S.T. Monograph 175
Revised to ITS-90

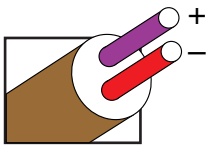

Thermocouple Grade

Nickel-Chromium vs. Copper-Nickel

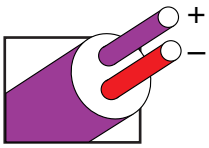

Extension Grade

MAXIMUM TEMPERATURE RANGE

Thermocouple Grade
– 328 to 1652°F
– 200 to 900°C

Extension Grade
32 to 392°F
0 to 200°C

LIMITS OF ERROR
(whichever is greater)
Standard: 1.7°C or 0.5% Above 0°C
1.7°C or 1.0% Below 0°C
Special: 1.0°C or 0.4%

COMMENTS, BARE WIRE ENVIRONMENT:
Oxidizing or Inert; Limited Use in Vacuum or Reducing; Highest EMF Change per Degree

TEMPERATURE IN DEGREES °F
REFERENCE JUNCTION AT 32°F

Thermoelectric Voltage in Millivolts

°F	-10	-9	-8	-7	-6	-5	-4	-3	-2	-1	0	°F
-450							-9.835	-9.834	-9.833	-9.832	-9.830	-450
-440	-9.830	-9.829	-9.827	-9.825	-9.823	-9.821	-9.819	-9.817	-9.814	-9.812	-9.809	-440
-430	-9.809	-9.806	-9.803	-9.800	-9.797	-9.793	-9.790	-9.786	-9.782	-9.779	-9.775	-430
-420	-9.775	-9.771	-9.766	-9.762	-9.758	-9.753	-9.749	-9.744	-9.739	-9.734	-9.729	-420
-410	-9.729	-9.724	-9.718	-9.713	-9.707	-9.702	-9.696	-9.690	-9.684	-9.678	-9.672	-410
-400	-9.672	-9.666	-9.659	-9.653	-9.646	-9.639	-9.632	-9.625	-9.618	-9.611	-9.604	-400
-390	-9.604	-9.597	-9.589	-9.581	-9.574	-9.566	-9.558	-9.550	-9.542	-9.534	-9.525	-390
-380	-9.525	-9.517	-9.508	-9.500	-9.491	-9.482	-9.473	-9.464	-9.455	-9.446	-9.436	-380
-370	-9.436	-9.427	-9.417	-9.408	-9.398	-9.388	-9.378	-9.368	-9.358	-9.348	-9.338	-370
-360	-9.338	-9.327	-9.317	-9.306	-9.295	-9.285	-9.274	-9.263	-9.252	-9.241	-9.229	-360
-350	-9.229	-9.218	-9.207	-9.195	-9.184	-9.172	-9.160	-9.148	-9.136	-9.124	-9.112	-350
-340	-9.112	-9.100	-9.088	-9.075	-9.063	-9.050	-9.038	-9.025	-9.012	-8.999	-8.986	-340
-330	-8.986	-8.973	-8.960	-8.947	-8.934	-8.920	-8.907	-8.893	-8.880	-8.866	-8.852	-330
-320	-8.852	-8.839	-8.825	-8.811	-8.797	-8.782	-8.768	-8.754	-8.739	-8.725	-8.710	-320
-310	-8.710	-8.696	-8.681	-8.666	-8.652	-8.637	-8.622	-8.607	-8.591	-8.576	-8.561	-310
-300	-8.561	-8.546	-8.530	-8.515	-8.499	-8.483	-8.468	-8.452	-8.436	-8.420	-8.404	-300
-290	-8.404	-8.388	-8.372	-8.356	-8.339	-8.323	-8.307	-8.290	-8.273	-8.257	-8.240	-290
-280	-8.240	-8.223	-8.206	-8.189	-8.173	-8.155	-8.138	-8.121	-8.104	-8.087	-8.069	-280
-270	-8.069	-8.052	-8.034	-8.017	-7.999	-7.981	-7.963	-7.945	-7.928	-7.910	-7.891	-270
-260	-7.891	-7.873	-7.855	-7.837	-7.819	-7.800	-7.782	-7.763	-7.745	-7.726	-7.707	-260
-250	-7.707	-7.688	-7.670	-7.651	-7.632	-7.613	-7.593	-7.574	-7.555	-7.536	-7.516	-250
-240	-7.516	-7.497	-7.478	-7.458	-7.438	-7.419	-7.399	-7.379	-7.359	-7.339	-7.319	-240
-230	-7.319	-7.299	-7.279	-7.259	-7.239	-7.219	-7.198	-7.178	-7.157	-7.137	-7.116	-230
-220	-7.116	-7.096	-7.075	-7.054	-7.033	-7.013	-6.992	-6.971	-6.950	-6.928	-6.907	-220
-210	-6.907	-6.886	-6.865	-6.843	-6.822	-6.801	-6.779	-6.757	-6.736	-6.714	-6.692	-210
-200	-6.692	-6.671	-6.649	-6.627	-6.605	-6.583	-6.561	-6.539	-6.516	-6.494	-6.472	-200
-190	-6.472	-6.449	-6.427	-6.405	-6.382	-6.359	-6.337	-6.314	-6.291	-6.269	-6.246	-190
-180	-6.246	-6.223	-6.200	-6.177	-6.154	-6.130	-6.107	-6.084	-6.061	-6.037	-6.014	-180
-170	-6.014	-5.991	-5.967	-5.943	-5.920	-5.896	-5.872	-5.849	-5.825	-5.801	-5.777	-170
-160	-5.777	-5.753	-5.729	-5.705	-5.681	-5.656	-5.632	-5.608	-5.584	-5.559	-5.535	-160
-150	-5.535	-5.510	-5.486	-5.461	-5.436	-5.412	-5.387	-5.362	-5.337	-5.312	-5.287	-150
-140	-5.287	-5.262	-5.237	-5.212	-5.187	-5.162	-5.136	-5.111	-5.086	-5.060	-5.035	-140
-130	-5.035	-5.009	-4.984	-4.958	-4.932	-4.907	-4.881	-4.855	-4.829	-4.803	-4.777	-130
-120	-4.777	-4.751	-4.725	-4.699	-4.673	-4.647	-4.621	-4.594	-4.568	-4.542	-4.515	-120
-110	-4.515	-4.489	-4.462	-4.436	-4.409	-4.382	-4.355	-4.329	-4.302	-4.275	-4.248	-110
-100	-4.248	-4.221	-4.194	-4.167	-4.140	-4.113	-4.086	-4.058	-4.031	-4.004	-3.976	-100
-90	-3.976	-3.949	-3.922	-3.894	-3.867	-3.839	-3.811	-3.784	-3.756	-3.728	-3.700	-90
-80	-3.700	-3.672	-3.645	-3.617	-3.589	-3.561	-3.532	-3.504	-3.476	-3.448	-3.420	-80
-70	-3.420	-3.391	-3.363	-3.335	-3.306	-3.278	-3.249	-3.221	-3.192	-3.163	-3.135	-70
-60	-3.135	-3.106	-3.077	-3.048	-3.020	-2.991	-2.962	-2.933	-2.904	-2.875	-2.846	-60
-50	-2.846	-2.816	-2.787	-2.758	-2.729	-2.699	-2.670	-2.641	-2.611	-2.582	-2.552	-50
-40	-2.552	-2.523	-2.493	-2.463	-2.434	-2.404	-2.374	-2.344	-2.315	-2.285	-2.255	-40
-30	-2.255	-2.225	-2.195	-2.165	-2.135	-2.105	-2.074	-2.044	-2.014	-1.984	-1.953	-30
-20	-1.953	-1.923	-1.893	-1.862	-1.832	-1.801	-1.771	-1.740	-1.709	-1.679	-1.648	-20
-10	-1.648	-1.617	-1.587	-1.556	-1.525	-1.494	-1.463	-1.432	-1.401	-1.370	-1.339	-10
0	-1.339	-1.308	-1.277	-1.245	-1.214	-1.183	-1.152	-1.120	-1.089	-1.057	-1.026	0
0	-1.026	-0.994	-0.963	-0.931	-0.900	-0.868	-0.836	-0.805	-0.773	-0.741	-0.709	0
10	-0.709	-0.677	-0.645	-0.614	-0.582	-0.550	-0.517	-0.485	-0.453	-0.421	-0.389	10
20	-0.389	-0.357	-0.324	-0.292	-0.260	-0.227	-0.195	-0.163	-0.130	-0.098	-0.065	20
30	-0.065	-0.033	0.000	0.033	0.065	0.098	0.131	0.163	0.196	0.229	0.262	30
40	0.262	0.294	0.327	0.360	0.393	0.426	0.459	0.492	0.525	0.558	0.591	40
50	0.591	0.624	0.657	0.691	0.724	0.757	0.790	0.824	0.857	0.890	0.924	50
60	0.924	0.957	0.990	1.024	1.057	1.091	1.124	1.158	1.192	1.225	1.259	60
70	1.259	1.292	1.326	1.360	1.394	1.427	1.461	1.495	1.529	1.563	1.597	70
80	1.597	1.631	1.665	1.699	1.733	1.767	1.801	1.835	1.869	1.904	1.938	80
90	1.938	1.972	2.006	2.041	2.075	2.109	2.144	2.178	2.212	2.247	2.281	90
°F	0	1	2	3	4	5	6	7	8	9	10	°F

°F	0	1	2	3	4	5	6	7	8	9	10	°F
100	2.281	2.316	2.351	2.385	2.420	2.454	2.489	2.524	2.558	2.593	2.628	100
110	2.628	2.663	2.698	2.733	2.767	2.802	2.837	2.872	2.907	2.942	2.977	110
120	2.977	3.012	3.048	3.083	3.118	3.153	3.188	3.224	3.259	3.294	3.330	120
130	3.330	3.365	3.400	3.436	3.471	3.507	3.542	3.578	3.613	3.649	3.685	130
140	3.685	3.720	3.756	3.792	3.827	3.863	3.899	3.935	3.970	4.006	4.042	140
150	4.042	4.078	4.114	4.150	4.186	4.222	4.258	4.294	4.330	4.366	4.403	150
160	4.403	4.439	4.475	4.511	4.547	4.584	4.620	4.656	4.693	4.729	4.766	160
170	4.766	4.802	4.839	4.875	4.912	4.948	4.985	5.021	5.058	5.095	5.131	170
180	5.131	5.168	5.205	5.242	5.278	5.315	5.352	5.389	5.426	5.463	5.500	180
190	5.500	5.537	5.574	5.611	5.648	5.685	5.722	5.759	5.796	5.833	5.871	190
200	5.871	5.908	5.945	5.982	6.020	6.057	6.094	6.132	6.169	6.207	6.244	200
210	6.244	6.281	6.319	6.356	6.394	6.432	6.469	6.507	6.544	6.582	6.620	210
220	6.620	6.658	6.695	6.733	6.771	6.809	6.847	6.884	6.922	6.960	6.998	220
230	6.998	7.036	7.074	7.112	7.150	7.188	7.226	7.264	7.302	7.341	7.379	230
240	7.379	7.417	7.455	7.493	7.532	7.570	7.608	7.647	7.685	7.723	7.762	240
250	7.762	7.800	7.839	7.877	7.916	7.954	7.993	8.031	8.070	8.108	8.147	250
260	8.147	8.186	8.224	8.263	8.302	8.340	8.379	8.418	8.457	8.496	8.535	260
270	8.535	8.573	8.612	8.651	8.690	8.729	8.768	8.807	8.846	8.885	8.924	270
280	8.924	8.963	9.002	9.041	9.081	9.120	9.159	9.198	9.237	9.277	9.316	280
290	9.316	9.355	9.395	9.434	9.473	9.513	9.552	9.591	9.631	9.670	9.710	290
300	9.710	9.749	9.789	9.828	9.868	9.907	9.947	9.987	10.026	10.066	10.106	300
310	10.106	10.145	10.185	10.225	10.265	10.304	10.344	10.384	10.424	10.464	10.503	310
320	10.503	10.543	10.583	10.623	10.663	10.703	10.743	10.783	10.823	10.863	10.903	320
330	10.903	10.943	10.983	11.024	11.064	11.104	11.144	11.184	11.224	11.265	11.305	330
340	11.305	11.345	11.385	11.426	11.466	11.506	11.547	11.587	11.627	11.668	11.708	340
350	11.708	11.749	11.789	11.830	11.870	11.911	11.951	11.992	12.032	12.073	12.113	350
360	12.113	12.154	12.195	12.235	12.276	12.317	12.357	12.398	12.439	12.480	12.520	360
370	12.520	12.561	12.602	12.643	12.684	12.724	12.765	12.806	12.847	12.888	12.929	370
380	12.929	12.970	13.011	13.052	13.093	13.134	13.175	13.216	13.257	13.298	13.339	380
390	13.339	13.380	13.421	13.462	13.504	13.545	13.586	13.627	13.668	13.710	13.751	390
400	13.751	13.792	13.833	13.875	13.916	13.957	13.999	14.040	14.081	14.123	14.164	400
410	14.164	14.205	14.247	14.288	14.330	14.371	14.413	14.454	14.496	14.537	14.579	410
420	14.579	14.620	14.662	14.704	14.745	14.787	14.828	14.870	14.912	14.953	14.995	420
430	14.995	15.037	15.078	15.120	15.162	15.204	15.245	15.287	15.329	15.371	15.413	430
440	15.413	15.454	15.496	15.538	15.580	15.622	15.664	15.706	15.748	15.790	15.831	440
450	15.831	15.873	15.915	15.957	15.999	16.041	16.083	16.125	16.168	16.210	16.252	450
460	16.252	16.294	16.336	16.378	16.420	16.462	16.504	16.547	16.589	16.631	16.673	460
470	16.673	16.715	16.758	16.800	16.842	16.884	16.927	16.969	17.011	17.054	17.096	470
480	17.096	17.138	17.181	17.223	17.265	17.308	17.350	17.392	17.435	17.477	17.520	480
490	17.520	17.562	17.605	17.647	17.690	17.732	17.775	17.817	17.860	17.902	17.945	490
500	17.945	17.987	18.030	18.073	18.115	18.158	18.200	18.243	18.286	18.328	18.371	500
510	18.371	18.414	18.456	18.499	18.542	18.585	18.627	18.670	18.713	18.756	18.798	510
520	18.798	18.841	18.884	18.927	18.969	19.012	19.055	19.098	19.141	19.184	19.227	520
530	19.227	19.269	19.312	19.355	19.398	19.441	19.484	19.527	19.570	19.613	19.656	530
540	19.656	19.699	19.742	19.785	19.828	19.871	19.914	19.957	20.000	20.043	20.086	540
550	20.086	20.129	20.172	20.216	20.259	20.302	20.345	20.388	20.431	20.474	20.517	550
560	20.517	20.561	20.604	20.647	20.690	20.733	20.777	20.820	20.863	20.906	20.950	560
570	20.950	20.993	21.036	21.080	21.123	21.166	21.209	21.253	21.296	21.339	21.383	570
580	21.383	21.426	21.470	21.513	21.556	21.600	21.643	21.686	21.730	21.773	21.817	580
590	21.817	21.860	21.904	21.947	21.991	22.034	22.078	22.121	22.165	22.208	22.252	590
600	22.252	22.295	22.339	22.382	22.426	22.469	22.513	22.556	22.600	22.644	22.687	600
610	22.687	22.731	22.774	22.818	22.862	22.905	22.949	22.993	23.036	23.080	23.124	610
620	23.124	23.167	23.211	23.255	23.298	23.342	23.386	23.429	23.473	23.517	23.561	620
630	23.561	23.604	23.648	23.692	23.736	23.780	23.823	23.867	23.911	23.955	23.999	630
640	23.999	24.042	24.086	24.130	24.174	24.218	24.262	24.305	24.349	24.393	24.437	640
650	24.437	24.481	24.525	24.569	24.613	24.657	24.701	24.745	24.789	24.832	24.876	650
660	24.876	24.920	24.964	25.008	25.052	25.096	25.140	25.184	25.228	25.272	25.316	660
670	25.316	25.360	25.404	25.448	25.493	25.537	25.581	25.625	25.669	25.713	25.757	670
680	25.757	25.801	25.845	25.889	25.933	25.977	26.022	26.066	26.110	26.154	26.198	680
690	26.198	26.242	26.286	26.331	26.375	26.419	26.463	26.507	26.552	26.596	26.640	690
°F	0	1	2	3	4	5	6	7	8	9	10	°F

MAXIMUM TEMPERATURE RANGE

Thermocouple Grade
– 328 to 1652°F
– 200 to 900°C

Extension Grade
32 to 392°F
0 to 200°C

LIMITS OF ERROR
(whichever is greater)
Standard: 1.7°C or 0.5% Above 0°C
1.7°C or 1.0% Below 0°C
Special: 1.0°C or 0.4%

COMMENTS, BARE WIRE ENVIRONMENT:
Oxidizing or Inert; Limited Use in Vacuum or Reducing; Highest EMF Change per Degree

TEMPERATURE IN DEGREES °F
REFERENCE JUNCTION AT 32°F

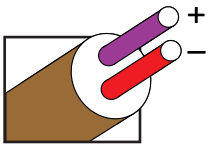

Thermocouple Grade

Nickel-Chromium vs. Copper-Nickel

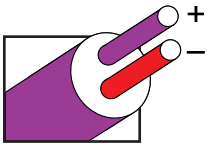

Extension Grade

Revised Thermocouple Reference Tables

TYPE E

Reference Tables
N.I.S.T. Monograph 175
Revised to ITS-90

Z

Thermoelectric Voltage in Millivolts

°F	0	1	2	3	4	5	6	7	8	9	10	°F
700	26.640	26.684	26.728	26.773	26.817	26.861	26.905	26.950	26.994	27.038	27.082	700
710	27.082	27.127	27.171	27.215	27.259	27.304	27.348	27.392	27.437	27.481	27.525	710
720	27.525	27.570	27.614	27.658	27.703	27.747	27.791	27.836	27.880	27.924	27.969	720
730	27.969	28.013	28.057	28.102	28.146	28.191	28.235	28.279	28.324	28.368	28.413	730
740	28.413	28.457	28.501	28.546	28.590	28.635	28.679	28.724	28.768	28.813	28.857	740
750	28.857	28.901	28.946	28.990	29.035	29.079	29.124	29.168	29.213	29.257	29.302	750
760	29.302	29.346	29.391	29.435	29.480	29.525	29.569	29.614	29.658	29.703	29.747	760
770	29.747	29.792	29.836	29.881	29.925	29.970	30.015	30.059	30.104	30.148	30.193	770
780	30.193	30.238	30.282	30.327	30.371	30.416	30.461	30.505	30.550	30.595	30.639	780
790	30.639	30.684	30.728	30.773	30.818	30.862	30.907	30.952	30.996	31.041	31.086	790
800	31.086	31.130	31.175	31.220	31.264	31.309	31.354	31.398	31.443	31.488	31.533	800
810	31.533	31.577	31.622	31.667	31.711	31.756	31.801	31.846	31.890	31.935	31.980	810
820	31.980	32.025	32.069	32.114	32.159	32.204	32.248	32.293	32.338	32.383	32.427	820
830	32.427	32.472	32.517	32.562	32.606	32.651	32.696	32.741	32.786	32.830	32.875	830
840	32.875	32.920	32.965	33.010	33.054	33.099	33.144	33.189	33.234	33.278	33.323	840
850	33.323	33.368	33.413	33.458	33.503	33.547	33.592	33.637	33.682	33.727	33.772	850
860	33.772	33.816	33.861	33.906	33.951	33.996	34.041	34.086	34.130	34.175	34.220	860
870	34.220	34.265	34.310	34.355	34.400	34.445	34.489	34.534	34.579	34.624	34.669	870
880	34.669	34.714	34.759	34.804	34.849	34.893	34.938	34.983	35.028	35.073	35.118	880
890	35.118	35.163	35.208	35.253	35.298	35.343	35.387	35.432	35.477	35.522	35.567	890
900	35.567	35.612	35.657	35.702	35.747	35.792	35.837	35.882	35.927	35.972	36.016	900
910	36.016	36.061	36.106	36.151	36.196	36.241	36.286	36.331	36.376	36.421	36.466	910
920	36.466	36.511	36.556	36.601	36.646	36.691	36.736	36.781	36.826	36.870	36.915	920
930	36.915	36.960	37.005	37.050	37.095	37.140	37.185	37.230	37.275	37.320	37.365	930
940	37.365	37.410	37.455	37.500	37.545	37.590	37.635	37.680	37.725	37.770	37.815	940
950	37.815	37.860	37.905	37.950	37.995	38.040	38.085	38.130	38.175	38.220	38.265	950
960	38.265	38.309	38.354	38.399	38.444	38.489	38.534	38.579	38.624	38.669	38.714	960
970	38.714	38.759	38.804	38.849	38.894	38.939	38.984	39.029	39.074	39.119	39.164	970
980	39.164	39.209	39.254	39.299	39.344	39.389	39.434	39.479	39.524	39.569	39.614	980
990	39.614	39.659	39.704	39.749	39.794	39.839	39.884	39.929	39.974	40.019	40.064	990
1000	40.064	40.109	40.154	40.199	40.243	40.288	40.333	40.378	40.423	40.468	40.513	1000
1010	40.513	40.558	40.603	40.648	40.693	40.738	40.783	40.828	40.873	40.918	40.963	1010
1020	40.963	41.008	41.053	41.098	41.143	41.188	41.233	41.278	41.323	41.368	41.412	1020
1030	41.412	41.457	41.502	41.547	41.592	41.637	41.682	41.727	41.772	41.817	41.862	1030
1040	41.862	41.907	41.952	41.997	42.042	42.087	42.132	42.176	42.221	42.266	42.311	1040
1050	42.311	42.356	42.401	42.446	42.491	42.536	42.581	42.626	42.671	42.715	42.760	1050
1060	42.760	42.805	42.850	42.895	42.940	42.985	43.030	43.075	43.120	43.165	43.209	1060
1070	43.209	43.254	43.299	43.344	43.389	43.434	43.479	43.524	43.569	43.613	43.658	1070
1080	43.658	43.703	43.748	43.793	43.838	43.883	43.928	43.972	44.017	44.062	44.107	1080
1090	44.107	44.152	44.197	44.242	44.286	44.331	44.376	44.421	44.466	44.511	44.555	1090
1100	44.555	44.600	44.645	44.690	44.735	44.780	44.824	44.869	44.914	44.959	45.004	1100
1110	45.004	45.049	45.093	45.138	45.183	45.228	45.273	45.317	45.362	45.407	45.452	1110
1120	45.452	45.497	45.541	45.586	45.631	45.676	45.720	45.765	45.810	45.855	45.900	1120
1130	45.900	45.944	45.989	46.034	46.079	46.123	46.168	46.213	46.258	46.302	46.347	1130
1140	46.347	46.392	46.437	46.481	46.526	46.571	46.616	46.660	46.705	46.750	46.794	1140
1150	46.794	46.839	46.884	46.929	46.973	47.018	47.063	47.107	47.152	47.197	47.241	1150
1160	47.241	47.286	47.331	47.375	47.420	47.465	47.509	47.554	47.599	47.643	47.688	1160
1170	47.688	47.733	47.777	47.822	47.867	47.911	47.956	48.001	48.045	48.090	48.135	1170
1180	48.135	48.179	48.224	48.268	48.313	48.358	48.402	48.447	48.492	48.536	48.581	1180
1190	48.581	48.625	48.670	48.715	48.759	48.804	48.848	48.893	48.937	48.982	49.027	1190
1200	49.027	49.071	49.116	49.160	49.205	49.249	49.294	49.338	49.383	49.428	49.472	1200
1210	49.472	49.517	49.561	49.606	49.650	49.695	49.739	49.784	49.828	49.873	49.917	1210
1220	49.917	49.962	50.006	50.051	50.095	50.140	50.184	50.229	50.273	50.318	50.362	1220
1230	50.362	50.407	50.451	50.495	50.540	50.584	50.629	50.673	50.718	50.762	50.807	1230
1240	50.807	50.851	50.895	50.940	50.984	51.029	51.073	51.118	51.162	51.206	51.251	1240
1250	51.251	51.295	51.340	51.384	51.428	51.473	51.517	51.561	51.606	51.650	51.695	1250
1260	51.695	51.739	51.783	51.828	51.872	51.916	51.961	52.005	52.049	52.094	52.138	1260
1270	52.138	52.182	52.227	52.271	52.315	52.360	52.404	52.448	52.493	52.537	52.581	1270
1280	52.581	52.625	52.670	52.714	52.758	52.803	52.847	52.891	52.935	52.980	53.024	1280
1290	53.024	53.068	53.112	53.157	53.201	53.245	53.289	53.334	53.378	53.422	53.466	1290
°F	0	1	2	3	4	5	6	7	8	9	10	°F

°F	0	1	2	3	4	5	6	7	8	9	10	°F
1300	53.466	53.510	53.555	53.599	53.643	53.687	53.732	53.776	53.820	53.864	53.908	1300
1310	53.908	53.952	53.997	54.041	54.085	54.129	54.173	54.218	54.262	54.306	54.350	1310
1320	54.350	54.394	54.438	54.482	54.527	54.571	54.615	54.659	54.703	54.747	54.791	1320
1330	54.791	54.835	54.879	54.924	54.968	55.012	55.056	55.100	55.144	55.188	55.232	1330
1340	55.232	55.276	55.320	55.364	55.408	55.453	55.497	55.541	55.585	55.629	55.673	1340
1350	55.673	55.717	55.761	55.805	55.849	55.893	55.937	55.981	56.025	56.069	56.113	1350
1360	56.113	56.157	56.201	56.245	56.289	56.333	56.377	56.421	56.465	56.509	56.553	1360
1370	56.553	56.597	56.641	56.685	56.729	56.773	56.816	56.860	56.904	56.948	56.992	1370
1380	56.992	57.036	57.080	57.124	57.168	57.212	57.256	57.300	57.344	57.387	57.431	1380
1390	57.431	57.475	57.519	57.563	57.607	57.651	57.695	57.738	57.782	57.826	57.870	1390
1400	57.870	57.914	57.958	58.002	58.045	58.089	58.133	58.177	58.221	58.265	58.308	1400
1410	58.308	58.352	58.396	58.440	58.484	58.527	58.571	58.615	58.659	58.702	58.746	1410
1420	58.746	58.790	58.834	58.878	58.921	58.965	59.009	59.053	59.096	59.140	59.184	1420
1430	59.184	59.228	59.271	59.315	59.359	59.402	59.446	59.490	59.534	59.577	59.621	1430
1440	59.621	59.665	59.708	59.752	59.796	59.839	59.883	59.927	59.970	60.014	60.058	1440
1450	60.058	60.101	60.145	60.189	60.232	60.276	60.320	60.363	60.407	60.451	60.494	1450
1460	60.494	60.538	60.581	60.625	60.669	60.712	60.756	60.799	60.843	60.887	60.930	1460
1470	60.930	60.974	61.017	61.061	61.105	61.148	61.192	61.235	61.279	61.322	61.366	1470
1480	61.366	61.409	61.453	61.496	61.540	61.583	61.627	61.671	61.714	61.758	61.801	1480
1490	61.801	61.845	61.888	61.932	61.975	62.018	62.062	62.105	62.149	62.192	62.236	1490
1500	62.236	62.279	62.323	62.366	62.410	62.453	62.496	62.540	62.583	62.627	62.670	1500
1510	62.670	62.714	62.757	62.800	62.844	62.887	62.931	62.974	63.017	63.061	63.104	1510
1520	63.104	63.148	63.191	63.234	63.278	63.321	63.364	63.408	63.451	63.494	63.538	1520
1530	63.538	63.581	63.624	63.668	63.711	63.754	63.798	63.841	63.884	63.927	63.971	1530
1540	63.971	64.014	64.057	64.101	64.144	64.187	64.230	64.274	64.317	64.360	64.403	1540
1550	64.403	64.447	64.490	64.533	64.576	64.619	64.663	64.706	64.749	64.792	64.835	1550
1560	64.835	64.879	64.922	64.965	65.008	65.051	65.094	65.138	65.181	65.224	65.267	1560
1570	65.267	65.310	65.353	65.396	65.440	65.483	65.526	65.569	65.612	65.655	65.698	1570
1580	65.698	65.741	65.784	65.827	65.871	65.914	65.957	66.000	66.043	66.086	66.129	1580
1590	66.129	66.172	66.215	66.258	66.301	66.344	66.387	66.430	66.473	66.516	66.559	1590
1600	66.559	66.602	66.645	66.688	66.731	66.774	66.817	66.860	66.903	66.946	66.989	1600
1610	66.989	67.031	67.074	67.117	67.160	67.203	67.246	67.289	67.332	67.375	67.418	1610
1620	67.418	67.460	67.503	67.546	67.589	67.632	67.675	67.718	67.760	67.803	67.846	1620
1630	67.846	67.889	67.932	67.974	68.017	68.060	68.103	68.146	68.188	68.231	68.274	1630
1640	68.274	68.317	68.359	68.402	68.445	68.488	68.530	68.573	68.616	68.659	68.701	1640
1650	68.701	68.744	68.787	68.829	68.872	68.915	68.957	69.000	69.043	69.085	69.128	1650
1660	69.128	69.171	69.213	69.256	69.298	69.341	69.384	69.426	69.469	69.511	69.554	1660
1670	69.554	69.597	69.639	69.682	69.724	69.767	69.809	69.852	69.894	69.937	69.979	1670
1680	69.979	70.022	70.064	70.107	70.149	70.192	70.234	70.277	70.319	70.362	70.404	1680
1690	70.404	70.447	70.489	70.531	70.574	70.616	70.659	70.701	70.744	70.786	70.828	1690
1700	70.828	70.871	70.913	70.955	70.998	71.040	71.082	71.125	71.167	71.209	71.252	1700
1710	71.252	71.294	71.336	71.379	71.421	71.463	71.506	71.548	71.590	71.632	71.675	1710
1720	71.675	71.717	71.759	71.801	71.844	71.886	71.928	71.970	72.012	72.055	72.097	1720
1730	72.097	72.139	72.181	72.223	72.266	72.308	72.350	72.392	72.434	72.476	72.518	1730
1740	72.518	72.561	72.603	72.645	72.687	72.729	72.771	72.813	72.855	72.897	72.939	1740
1750	72.939	72.981	73.023	73.066	73.108	73.150	73.192	73.234	73.276	73.318	73.360	1750
1760	73.360	73.402	73.444	73.486	73.528	73.570	73.612	73.654	73.696	73.738	73.780	1760
1770	73.780	73.821	73.863	73.905	73.947	73.989	74.031	74.073	74.115	74.157	74.199	1770
1780	74.199	74.241	74.283	74.324	74.366	74.408	74.450	74.492	74.534	74.576	74.618	1780
1790	74.618	74.659	74.701	74.743	74.785	74.827	74.869	74.910	74.952	74.994	75.036	1790
1800	75.036	75.078	75.120	75.161	75.203	75.245	75.287	75.329	75.370	75.412	75.454	1800
1810	75.454	75.496	75.538	75.579	75.621	75.663	75.705	75.746	75.788	75.830	75.872	1810
1820	75.872	75.913	75.955	75.997	76.039	76.081	76.122	76.164	76.206	76.248	76.289	1820
1830	76.289	76.331	76.373									1830
°F	0	1	2	3	4	5	6	7	8	9	10	°F

FLOW RATE VS. VERABAR DIFFERENTIAL PRESSURE

PEI Job #: 1641
Job Name: Buncombe
Pipe Size: 4" SCH 10
Annubar: V100-05-H-M
Base S.G.: 1
Barom Pressure: 407 In WC

Differential Pressure GCS-PDT-301..2 In WC	Gas Pressure **50" WC**					Gas Pressure **80" WC**					Gas Pressure **110" WC**					Gas Pressure **140" WC**				
	Gas Temperature					Gas Temperature					Gas Temperature					Gas Temperature				
	40 °F	**55 °F**	**70 °F**	**85 °F**	**104 °F**	**40 °F**	**55 °F**	**70 °F**	**85 °F**	**104 °F**	**40 °F**	**55 °F**	**70 °F**	**85 °F**	**104 °F**	**40 °F**	**55 °F**	**70 °F**	**85 °F**	**104 °F**
4.00	623	614	605	597	587	643	634	625	616	606	663	653	644	635	624	682	672	662	653	642
3.80	607	598	590	582	572	627	618	609	600	590	646	636	627	619	608	664	655	645	636	626
3.60	591	582	574	566	557	610	601	593	584	575	629	619	611	602	592	647	637	628	619	609
3.40	574	566	558	550	541	593	584	576	568	558	611	602	593	585	575	628	619	610	602	592
3.20	557	549	541	534	525	575	567	559	551	542	593	584	576	568	558	610	601	592	584	574
3.00	540	532	524	517	508	557	549	541	534	524	574	566	557	550	540	590	582	573	565	556
2.80	521	514	506	499	491	538	530	523	515	507	554	546	539	531	522	570	562	554	546	537
2.60	502	495	488	481	473	519	511	504	497	488	534	526	519	512	503	550	542	534	526	517
2.40	483	476	469	462	454	498	491	484	477	469	513	506	499	492	483	528	520	513	506	497
2.20	462	455	449	443	435	477	470	463	457	449	491	484	477	471	463	506	498	491	484	476
2.00	441	434	428	422	415	455	448	442	436	428	469	462	455	449	441	482	475	468	462	454
1.80	418	412	406	400	394	431	425	419	413	406	445	438	432	426	419	457	451	444	438	431
1.60	394	388	383	377	371	407	401	395	390	383	419	413	407	401	395	431	425	419	413	406
1.40	369	363	358	353	347	381	375	370	364	358	392	386	381	376	369	403	397	392	386	380
1.20	341	336	331	327	321	352	347	342	337	332	363	358	353	348	342	373	368	363	358	352
1.00	312	307	303	298	293	322	317	312	308	303	331	327	322	317	312	341	336	331	326	321
0.80	279	275	271	267	262	288	283	279	276	271	296	292	288	284	279	305	300	296	292	287
0.60	241	238	234	231	227	249	245	242	239	235	257	253	249	246	242	264	260	256	253	249
0.40	197	194	191	189	186	203	200	198	195	192	210	206	204	201	197	216	212	209	206	203
0.20	139	137	135	133	131	144	142	140	138	135	148	146	144	142	140	152	150	148	146	144
0.05	70	69	68	67	66	72	71	70	69	68	74	73	72	71	70	76	75	74	73	72

FLAME ARRESTER DELTA P

Flow Curves

350 SCFM x 60 min/hr = 21,000 SCFH

5000 and 5010 Flame Arresters

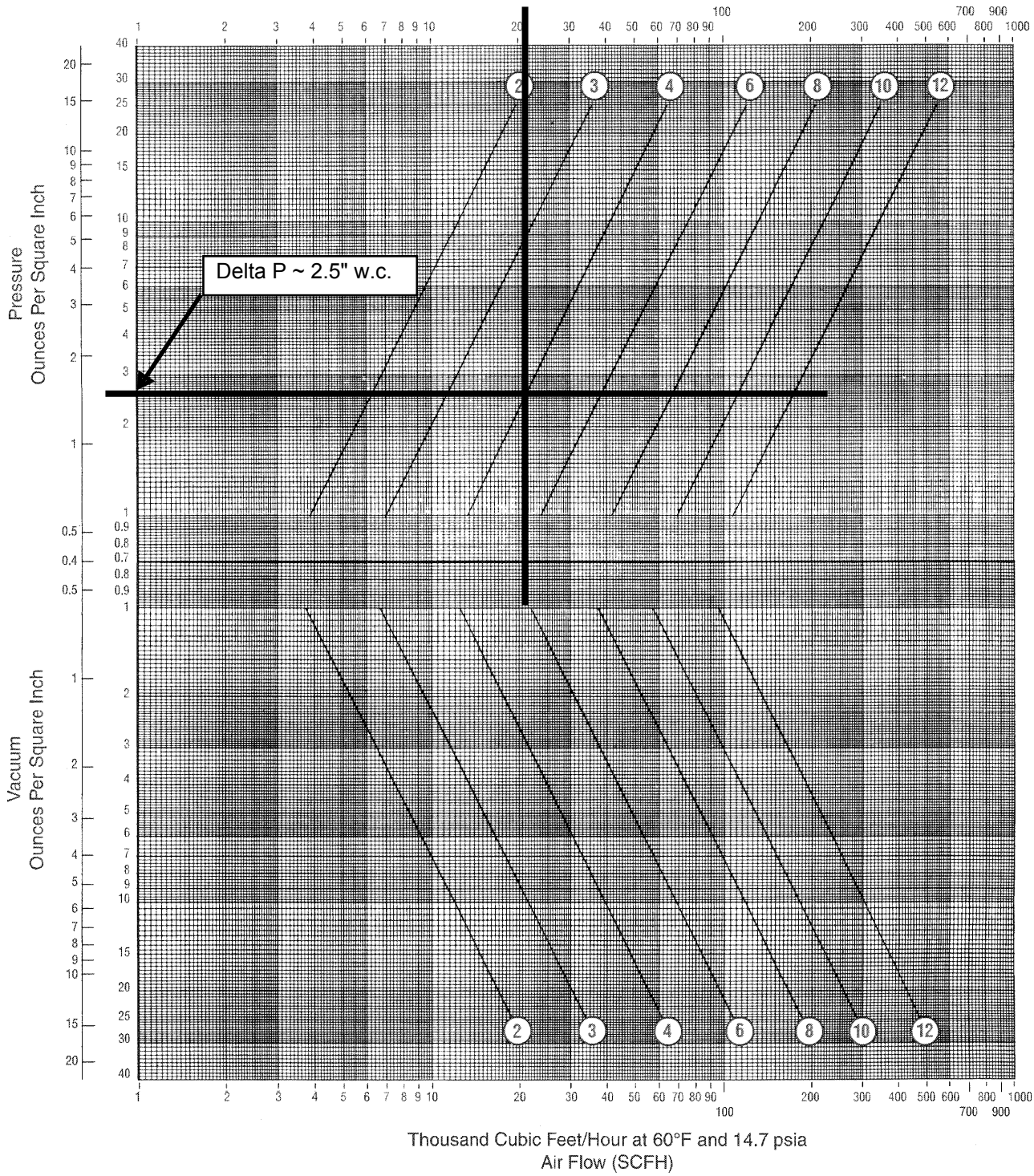

Tyco reserves the right to change product design and specifications without notice. Copyright © 2003 by Tyco International Ltd.

PLC SETUP

Job Name: Buncombe County Job #: 1641 .

Position	Module Type	# of Channels	Type
CPU	D2-260		Processor
Slot 0	AI-1 / F2-08AD-1	8 Inputs	4-20 Ma
Slot 1	AI-2 / F2-08AD-1	8 Inputs	4-20 Ma
Slot 2	AI-3 / F2-08AD-1	8 Inputs	4-20 Ma
Slot 3	AO-1 / F2-08DA-1	8 Outputs	4-20 Ma
Slot 4	DI-2 / D2-08ND3 / 1 Common	8 Inputs	24 VDC
Slot 5	FILL-1	FILL	FILL
Slot 6	FILL-2	FILL	FILL
Slot 7	COM-1 / H2-ECOM100	COM	COM

EXP SETUP

Position	Module Type	# of Channels	Type
CPU	D2/CM	N/A	Remote
Slot 0	DI-1 / D2-16NA / 2 Commons, Isolated	16 Inputs	120 VAC
Slot 1	RM-1 / F2-08TRS / 8 Commons, Isolated	8 Outputs	Relay
Slot 2	RM-2 / F2-08TRS / 8 Commons, Isolated	8 Outputs	Relay
Slot 3	FILL-3	FILL	FILL
Slot 4	FILL-4	FILL	FILL

COMMUNICATION MODULE

Slot #	Baud	Protocol	Data Bits, Parity, Stop Bits	Node	Connected Device
1	9600	N/A	8-ODD-1	N/A	N/A
2	9600	K-seq	8-ODD-1	N/A	Modem

VARIABLE FREQUENCY DRIVE CONFIGURATION
BLOWER

CODE	NAME	USER SETTINGS
GROUP 99		
9904	Motor Control Mode	Scalar: Frequency
9905	Motor Nom Voltage	460
9906	Motor Nom Current	46
9907	Motor Nom Frequency	60
9908	Motor Nom Speed	3530
9909	Motor Nom Power	40
GROUP 10		
1003	Direction	Forward
GROUP 11		
1104	REF1 Min (Hz)	6
1105	REF1 Max (Hz)	64
1107	REF 2 Min (%)	10
1108	REF2 Max (%)	100
GROUP 13		
1301	Minimum AI1 (%)	20
1302	Maximum AI1 (%)	100
1304	Minimum AI2 (%)	20
1305	Maximum AI2 (%)	100
GROUP 14		
1401	Relay Output 1	Ready
1402	Relay Output 2	Run
1403	Relay Output 3	Fault (-1)
GROUP 20		
2001	Minimum Speed	382
2002	Maximum Speed	3960
2003	Max Current (Group "9906" * SF)	52.9
2007	Minimum Frequency	6
2008	Maximum Frequency	66
GROUP 21		
2101	Start Function	Scalar Flystart
2102	Stop Function	Coast
GROUP 22		
2202	Acceler Time 1	5
2203	Deceler Time 1	5

VARIABLE FREQUENCY DRIVE CONFIGURATION
COOLER

CODE	NAME	USER SETTINGS
GROUP 99		
9904	Motor Control Mode	Scalar: Frequency
9905	Motor Nom Voltage	460
9906	Motor Nom Current	5
9907	Motor Nom Frequency	60
9908	Motor Nom Speed	865
9909	Motor Nom Power	3
GROUP 10		
1003	Direction	Forward
GROUP 11		
1104	REF1 Min (Hz)	6
1105	REF1 Max (Hz)	60
1107	REF 2 Min (%)	10
1108	REF2 Max (%)	100
GROUP 13		
1301	Minimum AI1 (%)	20
1302	Maximum AI1 (%)	100
1304	Minimum AI2 (%)	20
1305	Maximum AI2 (%)	100
GROUP 14		
1401	Relay Output 1	Ready
1402	Relay Output 2	Run
1403	Relay Output 3	Fault (-1)
GROUP 20		
2001	Minimum Speed	87
2002	Maximum Speed	870
2003	Max Current (Group "9906" * SF)	5.8
2007	Minimum Frequency	6
2008	Maximum Frequency	60
GROUP 21		
2101	Start Function	Scalar Flystart
2102	Stop Function	Coast
GROUP 22		
2202	Acceler Time 1	10
2203	Deceler Time 1	30

GAS COMPRESSION SYSTEM DATA LOG

(Recorded Data From Factory Test or System Start-up @ Site)

GAS COMPRESSION SYSTEM DATA LOG

Project # 1641 Project Name: Buncombe (Max 500 SCFM)

Tester	JEB	JEB		
Date	6.13.11	6.13.11		
Time	8:50	9:50		
Sky Conditions	Test Bay	Test Bay		
Ambient Temperature, deg F	76°F	81°F		
Inlet Temperature, deg F (GCS-TIT-301)	76°F	81°F		
LFG Vacuum, In WC (GCS-PI-301)	45" W.C.	42		
Demister Filter 301 Delta P (GCS-PDI-301)	3.2" W.C.	1.7		
Blower 301 Inlet Valve Position, % Open (GCS-FCV-301)	100%	100%		
BLR-301 Discharge Temperature, deg F (GCS-TIT-302)	204°F	217°F		
BLR-301 Discharge Pressure, ~~In WC~~ PSI (GCS-PI-302)	5.8	6.0		
Pre-Cooler (TX-301) Discharge Temperature, deg F (GCS-TI-301)	198°F	208°F		
* Aftercooler (TX-302) Discharge Temperature, deg F (GCS-TIT-303)	87°F	108°F		
Demister Filter 302 Delta P "W.C. (GCS-PDI-302)	3.2	3.0		
Demister Filter 302 Outlet Pressure, psi (GCS-PI-303)	5.0	5.0		
Total Flow Temperature, deg F (GCS-TIT-304)	88°F	103°F		
Total Flow Pressure, In WC (GCS-PIT-302)	5.7	5.8		
Engine Flow Temperature, deg F (GCS-TIT-305)	79	100		
Engine Flow Pressure, In WC (GCS-PIT-303)	5.0	4.9		

Changed to 105 @ 85

* ***PUSH BUTTON***

GAS COMPRESSION SYSTEM DATA LOG

Project # 1641 Project Name: Buncombe (Max 500 SCFM)

YIC-1 From Main Menu Screen				
ANALOG DATA MENU				
* **PROCESS OVERVIEW**				
GCS Inlet Vacuum, In WC	39.2	39.7		
Flare Flame Temperature, °F	79.°F	84 °F		
Engine Flow Temperature, °F	79°F	100°F		
Engine Flow Pressure, psi	5.1	4.9		
Total GCS Flow Rate, SCFM	512	491		
Total Flare Flow Rate, SCFM	512	0		
Engine Flow Rate, SCFM	0	502		
* **NEXT**				
GCS Inlet Temperature, °F	78°F	80°F		
Panel Temperature, °F	79°F	82°F		
Barometric Pressure, In WC	388.4	387.7		
Blower Outlet Temperature, °F	213°F	218°F		
Cooler Outlet Temperature, °F	89°F	107		
CH4, %	0.0	0.0		
O2, %	20.9	20.9		
* **BACK**				
* **BACK**				
* **BLOWER MENU**				
* **BLOWER 301**				
Status, Run/Stop	Run	Run		
Hour Meter	10	11		
Vibration, In/Sec	.12	.12		
Speed, % Max	97%	96%		
Current, Amps	45.4	46		
* **BACK**				
Outlet Temperature, °F	214	219		

* ***PUSH BUTTON***

GAS COMPRESSION SYSTEM DATA LOG

Project # 1641 Project Name: Buncombe (Max 500 SCFM)

Recirc Valve Position, % Closed	100%	100%		
* **BACK**				
* **FLOW MENU**				
* **TOTAL SYSTEM FLOW**				
Flow Delta P, In WC	2.42			
Flow Rate, SCFM	513			
Today's Total Flow, MMSCF	.032995			
Total Flow, MMSCF	.18			
Flow Pressure, In WC	5.1			
Flow Temperature, °F	88			
* **RESETTABLE FLOW**				
Resettable Total Flow, MMSCF	.178			
Reset Time				
Reset Date				
* **BACK**				
* **7 DAY FLOW HISTORY**				
Yesterday's Flow, MMSCF	0			
2 Day's Ago Flow, MMSCF	.02868			
3 Day's Ago Flow, MMSCF	.07821			
4 Day's Ago Flow, MMSCF	.03164			
5 Day's Ago Flow, MMSCF	.00646			
6 Day's Ago Flow, MMSCF	9.247e-3			
7 Day's Ago Flow, MMSCF				
* **BACK**				
* **14 MONTH FLOW HISTORY**				
Last Month's Flow, MMSCF	.1450			
2 Month's Ago Flow, MMSCF				
3 Month's Ago Flow, MMSCF				
4 Month's Ago Flow, MMSCF				

* Reset Button not working

* ***PUSH BUTTON***

GAS COMPRESSION SYSTEM DATA LOG

Project # 1641 Project Name: Buncombe (Max 500 SCFM)

5 Month's Ago Flow, MMSCF				
6 Month's Ago Flow, MMSCF				
7 Month's Ago Flow, MMSCF				
* **NEXT**				
8 Month's Ago Flow, MMSCF				
9 Month's Ago Flow, MMSCF				
10 Month's Ago Flow, MMSCF				
11 Month's Ago Flow, MMSCF				
12 Month's Ago Flow, MMSCF				
13 Month's Ago Flow, MMSCF				
14 Month's Ago Flow, MMSCF				
* **BACK**				
* **BACK**				
* **BACK**				
* **TOTAL FLARE**				
Flow Rate, SCFM	511			
Today's Total Flow, MMSCF	.032954			
Total Flow, MMSCF	1.41e-03			
* **RESETTABLE FLOW**				
Resettable Total Flow, MMSCF	.0014			
Reset Time				
Reset Date				
* **BACK**				
* **7 DAY FLOW HISTORY**				
Yesterday's Flow, MMSCF	0			
2 Day's Ago Flow, MMSCF	.0266			
3 Day's Ago Flow, MMSCF	1.8844e-			
4 Day's Ago Flow, MMSCF	.4627			
5 Day's Ago Flow, MMSCF	.4168			

* ***PUSH BUTTON***

GAS COMPRESSION SYSTEM DATA LOG

Project # 1641 Project Name: Buncombe (Max 500 SCFM)

6 Day's Ago Flow, MMSCF	-0.9378			
7 Day's Ago Flow, MMSCF	0			
* **BACK**				
* **14 MONTH FLOW HISTORY**				
Last Month's Flow, MMSCF				
2 Month's Ago Flow, MMSCF				
3 Month's Ago Flow, MMSCF				
4 Month's Ago Flow, MMSCF				
5 Month's Ago Flow, MMSCF				
6 Month's Ago Flow, MMSCF				
7 Month's Ago Flow, MMSCF				
* **NEXT**				
8 Month's Ago Flow, MMSCF				
9 Month's Ago Flow, MMSCF				
10 Month's Ago Flow, MMSCF				
11 Month's Ago Flow, MMSCF				
12 Month's Ago Flow, MMSCF				
13 Month's Ago Flow, MMSCF				
14 Month's Ago Flow, MMSCF				
* **BACK**				
* **BACK**				
* **BACK**				
* **FLARE 1 FLOW**				
Flow Rate, SCFM	F489			
Today's Total Flow, MMSCF	.032974			
Total Flow, MMSCF	-.36			
Flare Hour Meter, Hrs	2			
* **RESETTABLE FLOW**				
Resettable Total Flow, MMSCF	-3577			

* ***PUSH BUTTON***

GAS COMPRESSION SYSTEM DATA LOG

Project # 1641 Project Name: Buncombe (Max 500 SCFM)

Reset Time				
Reset Date				
* **BACK**				
* **7 DAY FLOW HISTORY**				
Yesterday's Flow, MMSCF	0			
2 Day's Ago Flow, MMSCF	.026619			
3 Day's Ago Flow, MMSCF	.000019			
4 Day's Ago Flow, MMSCF	.001551			
5 Day's Ago Flow, MMSCF	0			
6 Day's Ago Flow, MMSCF	-.41883			
7 Day's Ago Flow, MMSCF	0			
* **BACK**				
* **14 MONTH FLOW HISTORY**				
Last Month's Flow, MMSCF				
2 Month's Ago Flow, MMSCF				
3 Month's Ago Flow, MMSCF				
4 Month's Ago Flow, MMSCF				
5 Month's Ago Flow, MMSCF				
6 Month's Ago Flow, MMSCF				
7 Month's Ago Flow, MMSCF				
* **NEXT**				
8 Month's Ago Flow, MMSCF				
9 Month's Ago Flow, MMSCF				
10 Month's Ago Flow, MMSCF				
11 Month's Ago Flow, MMSCF				
12 Month's Ago Flow, MMSCF				
13 Month's Ago Flow, MMSCF				
14 Month's Ago Flow, MMSCF				
* **BACK**				

* ***PUSH BUTTON***

GAS COMPRESSION SYSTEM DATA LOG

Project # 1641 Project Name: Buncombe (Max 500 SCFM)

* **BACK**				
* **BACK**				
* **FLARE 2 FLOW**				
Flow Rate, SCFM				
Today's Total Flow, MMSCF				
Total Flow, MMSCF				
Flare Hour Meter, Hrs				
* **RESETTABLE FLOW**				
Resettable Total Flow, MMSCF				
Reset Time				
Reset Date				
* **BACK**				
* **7 DAY FLOW HISTORY**				
Yesterday's Flow, MMSCF				
2 Day's Ago Flow, MMSCF				
3 Day's Ago Flow, MMSCF				
4 Day's Ago Flow, MMSCF				
5 Day's Ago Flow, MMSCF				
6 Day's Ago Flow, MMSCF				
7 Day's Ago Flow, MMSCF				
* **BACK**				
* **14 MONTH FLOW HISTORY**				
Last Month's Flow, MMSCF				
2 Month's Ago Flow, MMSCF				
3 Month's Ago Flow, MMSCF				
4 Month's Ago Flow, MMSCF				
5 Month's Ago Flow, MMSCF				
6 Month's Ago Flow, MMSCF				
7 Month's Ago Flow, MMSCF				

* ***PUSH BUTTON***

GAS COMPRESSION SYSTEM DATA LOG

Project # 1641 Project Name: Buncombe (Max 500 SCFM)

* **NEXT**				
8 Month's Ago Flow, MMSCF				
9 Month's Ago Flow, MMSCF				
10 Month's Ago Flow, MMSCF				
11 Month's Ago Flow, MMSCF				
12 Month's Ago Flow, MMSCF				
13 Month's Ago Flow, MMSCF				
14 Month's Ago Flow, MMSCF				
* **BACK**				
* **BACK**				
* **BACK**				
* **ENGINE FLOW**				
Flow Rate, SCFM	0	499		
Today's Total Flow, MMSCF	.000021	.003523		
Total Flow, MMSCF	.12	.12		
Flow Temperature, °F	80	100		
Flow Delta P, In WC	~~5.0~~	2.42		
Flow Pressure, In WC	5.0	5.0		
* **RESETTABLE FLOW**				
Resettable Total Flow, MMSCF	.118			
Reset Time				
Reset Date				
* **BACK**				
* **7 DAY FLOW HISTORY**				
Yesterday's Flow, MMSCF	0			
2 Day's Ago Flow, MMSCF	.002060			
3 Day's Ago Flow, MMSCF	.079231			
4 Day's Ago Flow, MMSCF	.029970			
5 Day's Ago Flow, MMSCF	.006410			

* ***PUSH BUTTON***

GAS COMPRESSION SYSTEM DATA LOG

Project # 1641 Project Name: Buncombe (Max 500 SCFM)

6 Day's Ago Flow, MMSCF	.000008			
7 Day's Ago Flow, MMSCF				
* **BACK**				
* **14 MONTH FLOW HISTORY**				
Last Month's Flow, MMSCF				
2 Month's Ago Flow, MMSCF				
3 Month's Ago Flow, MMSCF				
4 Month's Ago Flow, MMSCF				
5 Month's Ago Flow, MMSCF				
6 Month's Ago Flow, MMSCF				
7 Month's Ago Flow, MMSCF				
* **NEXT**				
8 Month's Ago Flow, MMSCF				
9 Month's Ago Flow, MMSCF				
10 Month's Ago Flow, MMSCF				
11 Month's Ago Flow, MMSCF				
12 Month's Ago Flow, MMSCF				
13 Month's Ago Flow, MMSCF				
14 Month's Ago Flow, MMSCF				
* **BACK**				
* **BACK**				
* **BACK**				
* **BACK**				
* **COOLER DATA**				
Status, Run/Stop	Run	Run		
Hour Meter	4	4		
Speed, % Max	3	6		
Outlet Temperature, °F	105	107		
* **BACK**				

* ***PUSH BUTTON***

GAS COMPRESSION SYSTEM DATA LOG

Project # 1641 Project Name: Buncombe (Max 500 SCFM)

* **FLARE TEMPERATURE DATA**				
Pilot Temperature, °F	78			
Flame Temperature, °F	80			
* **BACK**				
* **AVERAGES**				
* **AVERAGING SETPOINTS**				
AVG Timer	30			
Filter Factor	.010			
* **BACK**				
* **FLOW AVERAGES**				
AVG Engine Flow, SCFM	1E-03			
AVG Available Flow, SCFM	499			
Engine Flow, SCFM	0			
Available Flow, SCFM	500			
Available Vacuum, In WC	0.0			
* **BACK**				
* **BACK**				
* **ANALOG**				
AI-1, CH 1				
AI-1, CH 2				
AI-1, CH 3				
AI-1, CH 4				
AI-1, CH 5				
AI-1, CH 6				
AI-1, CH 7				
AI-1, CH 8				
* **NEXT**				
AI-2, CH 1				
AI-2, CH 2				

* ***PUSH BUTTON***

GAS COMPRESSION SYSTEM DATA LOG

Project # 1641 Project Name: Buncombe (Max 500 SCFM)

AI-2, CH 3				
AI-2, CH 4				
AI-2, CH 5				
AI-2, CH 6				
AI-2, CH 7				
AI-2, CH 8				
* **NEXT**				
AI-3, CH 1				
AI-3, CH 2				
AI-3, CH 3				
AI-3, CH 4				
AI-3, CH 5				
AI-3, CH 6				
AI-3, CH 7				
AI-3, CH 8				
* **NEXT**				
AO-1, CH 1				
AO-1, CH 2				
AO-1, CH 3				
AO-1, CH 4				
AO-1, CH 5				
AO-1, CH 6				
AO-1, CH 7				
AO-1, CH 8				
* **BACK**				
* **BACK**				
* **BACK**				
* **BACK**				

* ***PUSH BUTTON***

SAFETY ALARM & SHUTDOWN TEST REPORT

(Recorded Data From Factory Test or System Start-up @ Site)

ALARM AND SHUTDOWN ANNUNCIATION TEST REPORT

6.10.11

ADRESS	DESCRIPTION	INITIALS	YIC	AD	COMMENTS
C1216	[BLR 301] High Amp AL		✓	N/A	PV > SP
C1316	[BLR 301] High Amp SD		✓		PV > SP
C1221	[BLR 301] High Outlet Temp AL		✓		PV > SP
C1321	[BLR 301] High Outlet Temp SD		✓		PV > SP
C1215	[BLR 301] High Vibration AL		✓		PV > SP
C1315	[BLR 301] High Vibration SD		✓		PV > SP
C216	[BLR 301] Low Amp AL		✓		SP > PV
C316	[BLR 301] Low Amp SD		✓		SP > PV
C322	[BLR 301] VFD 1 Run Sig Fail SD		✓		Parameter 1402 Changed Fault
C500	[BLR 301] VFD Fault SD		✓		OPENED Disconnect while Run
C1263	[Cntrl Pnl] High Temp AL		✓		OPENED Jumper, TC
C263	[Cntrl Pnl] Low Temp AL		✓		SP < PV
C431	[Engine 1] Alarm		✓		Jumped input
C1201	[Engine] High Flow Pressure AL		✓		PV > SP
C1301	[Engine] High Flow Pressure SD		✓		PV > SP
C1202	[Engine] High Flow Rate AL		✓		PV > SP
C1302	[Engine] High Flow Rate SD		✓		PV > SP
C1200	[Engine] High Flow Temp AL		✓		PV > SP
C1300	[Engine] High Flow Temp SD		✓		PV > SP
C201	[Engine] Low Flow Pressure AL		✓		PV > SP
C116	[FLR 1] Flame Fail SD				
C461	[FLR 1] Flame TC Fail SD		✓		Lifted Jumper
C1011	[FLR 1] High Flame Temp AL		✓		PV > SP
C1010	[FLR 1] High Flow Rate AL		✓		PV > SP
C11	[FLR 1] Low Flame Temp AL		✓		SP > PV
C111	[FLR 1] Low Flame Temp Restart		✓		Temp set Lower Than AIM
C10	[FLR 1] Low Flow Rate AL		✓		SP > PV
C110	[FLR 1] Low Flow Rate SD				"
C114	[FLR 1] Pilot Fail Restart		✓		
C460	[FLR 1] Pilot TC Fail SD				Lifted Jumper
C362	[FLR 1] SD Vlv Failed Closed SD		✓		Removed Signal
C1362	[FLR 1] SD Vlv Failed Open SD		✓		" "
C117	[FLR 1] Selected TC Fail SD		✓		Unlanded Jumpers
C14	[FLR 1] Start Freq AL		✓		
C1022	[FLR 2] High Flow Rate AL				
C22	[FLR 2] Low Flow Rate AL				
C363	[FLR 2] SD Vlv Failed Closed SD		✓		Removed Jumpers
C1363	[FLR 2] SD Vlv Failed Open SD		✓		" "
C26	[FLR 2] Start Freq AL				
C1165	[FLT 301] High Cond Lvl SD		✓		Filled w/ Water
C1070	[FLT 302] High BTM Cond Lvl AL		✓		"
C1073	[FLT 302] High TOP Cond Lvl AL		✓		"
C1270	[GasCooler 301] High Outlet Temp AL		✓	✓	PV > SP

530

ALARM AND SHUTDOWN ANNUNCIATION TEST REPORT

C270	[GasCooler 301] Low Outlet Temp AL		✓		Raised SP 1
C371	[GasCooler 301] Run Sig Fail SD		✓		VFD 2
C504	[GasCooler 301] VFD Fault SD		✓		opened Disconnect
C410	[GCS] GAC Fault AL		✓		Jumped Input
C1001	[GCS] High Inlet Temp AL				
C1101	[GCS] High Inlet Temp SD				
C0	[GCS] High Inlet Vacuum AL		✓		PV 7 SP
C100	[GCS] High Inlet Vacuum SD		✓		
C1047	[GCS] High Oxygen AL		✓		Turned Cal SW off
C1147	[GCS] High Oxygen SD		✓		"
C2	[GCS] Inlet VLV Failed Closed SD		✓		Rotated Cam @ fir
C1002	[GCS] Inlet VLV Failed Open AL		✓		Rotated Cam @ vlv
C50	[GCS] Low Methane AL		✓		GAC SW off
C520	[GCS] No Flow Condition SD		✓		enabled
C400	[GCS] Run Clock Off AL		✓		Turned Clk off
C46	[GCS] SP Grav Calc AL		✓		Made <Hg 100
C430	Any Engine Fail AL		✓	✓	Jumped Input

CLIMATE CONTROL SOLUTIONS

USER'S GUIDE

For all Packaged Systems
(Air Conditioners and Heat Pumps)

WA & WL - Series Air Conditioners
WH & SH - Series Air Source Heat Pumps

QA - Series Air Conditioners
QH - Series Air Source Heat Pumps
QW - Series Water Source Heat Pumps

PA - Series Air Conditioners
PH - Series Air Source Heat Pumps

MANUAL 2100-034 REV. E
SUPERSEDES REV. D
FILE VOL. I, TAB 6

DATE: 11-16-07

TABLE OF CONTENTS

General Information	Page	3
Air Filters	Page	3
Outdoor Coil	Page	3-4
Routine Equipment Outdoor Maintenance	Page	4
Basic Operating Principles	Page	4
Air Conditioners	Page	4-5
Heat Pump (Air-to-Air)	Page	5-6
Heat Pump (Water-to-Air)	Page	6
Ventilation	Page	7
Dehumidification Circuits	Page	7
Automatic Control Systems	Page	7
Thermostats	Page	7
Humidistats (Humidity Controllers)	Page	7-8
Insufficient Cooling or Heating	Page	8
Failure to Operate	Page	8
Lubrication Requirements	Page	8
Periodic Maintenance	Page	8-9
Helpful Hints and Operating Practices	Page	9

GENERAL INFORMATION

This manual is generic in nature and covers a wide range of heating and cooling products manufactured by Bard Manufacturing Company. It is intended to be a general guide for care and operation of typical systems and covers the most important features you should be aware of and are responsible for as the user of the equipment.

Because our product offerings are so varied and can be equipped with many features and options, it is not possible to cover all aspects of what your specific system may be configured for. Some systems may be quite simple in features to provide basic cooling and possibly heating, while others may also incorporate various ventilation technologies, dehumidification circuits, and many different internal controls as well as room temperature controls. Therefore, you should request a detailed operation sequence and explanation of any special features from your installer and/or Service Company, and also have them instruct you as to any routine maintenance procedures you are responsible for.

This manual will address the basic items that should apply to all systems, and will then be separated into specific types of products to cover things unique to those product types.

AIR FILTERS

Keeping clean air filter(s) is the single most important responsibility of the user of the equipment. Each type of system must be equipped with an air filter(s) in the indoor circulating air system to clean the air, to keep the system itself clean for peak efficiency and capacity, and to prolong the useful life of the equipment. DO NOT operate the system without the proper air filters.

Filters should be inspected at least monthly, and replaced or cleaned (depending on type) as needed. The useful life of an air filter can vary widely depending upon application and use of the equipment, and it is critical to monitor filter condition and establish an acceptable maintenance schedule. Failure to do so will increase operating and repair costs, decrease capacity and efficiency, and shorten the service life of the equipment. A common symptom of a dirty filter in the cooling mode is a freeze-up of the indoor coil.

The air filters used may be a disposable (throwaway) type or may be a cleanable type that can be thoroughly cleaned, rinsed and reused many times. It is important to make sure that the correct filter size and type for your system is always used. If there is any question as to acceptable filter size or type, review the Installation Instructions for the specific equipment involved, if available. Otherwise, consult with your installing dealer or Service Company.

Most equipment can have the filters inspected and serviced by the user with no problems. In some instances, because of equipment design or specific installation conditions, it may be necessary to have this procedure done by a qualified service company. Have your installer or service company show you where the filter(s) are and demonstrate the service procedure or make arrangements for them to provide this service on an as needed basis.

OUTDOOR COIL

The outdoor coil must be kept clean and free of any airborne debris, which can accumulate over time. Large volumes of air are circulated over the coil, and airborne debris such as lint, dust, materials shed from trees, paper or other types of airborne material that can become airborne can collect on the entering coil surface.

The outdoor coil must dissipate heat during the cooling mode, and for a heat pump must also absorb heat during the heating mode. If the coil is dirty and matted with debris, the airflow across the coil will be reduced causing poor performance, increased operating run time and associated utility bills, and in extreme conditions can shorten the useful life of the equipment.

Depending on the specific equipment involved, the surface that can accumulate debris can be on the opposite side that is exposed to view when standing in front of the machine. Closely review the machine when operating to see which direction or path that the airflow moves through the machine, and if the air inlet side of the coil is hidden, try to observe the back (hidden) side by looking into the side grilles, using flashlight if necessary.

While the user of the equipment needs to be aware of the potential of clogging of the outdoor coil surface, actual cleaning of the outdoor coil should not be attempted under most circumstances. If the user should attempt this procedure on their own, never do so without first having the installing dealer or Service Company instruct you in the proper procedure and technique.

WARNING: Do not open or enter the equipment without first turning off the electrical service disconnect. Failure to do so can result in personal injury due to moving parts and/or electric shock hazard resulting in death.

Other conditions that can cause reduction of airflow across the outdoor coil are flowers, shrubbery or other growth too near the outdoor coil air inlet and outlet openings. These living things, especially as they mature and grow, will be just as effective in blocking the airflow and create the same problems as will stacking things against the equipment. These conditions can be easily managed and controlled by the user, as they do not require actually entering into the equipment enclosure, which should only be done by qualified service technicians.

See section on Air-to-Air Heat Pumps for additional information concerning blockage due to heavy snow conditions, if applicable.

ROUTINE EQUIPMENT OUTDOOR MAINTENANCE

1. Avoid having any lawn sprinkler spray directly on the equipment, especially if from a brackish water source.
2. In coastal areas locate equipment the furthest distance away from the coastline as feasible.
3. Frequent cleaning and waxing of the cabinet using a good automobile polish will help extend its original appearance.

BASIC OPERATING PRINCIPLES

AIR CONDITIONERS

COOLING MODE

The cooling mode operates similar to a refrigerator, removing heat from inside the conditioned space and rejects it outside of the space being controlled. There are three main parts of the system:

1. The evaporator (indoor) coil where cold refrigerant absorbs heat from the air, which circulates from the conditioned space, through the machine, and is returned to the space at a lower temperature and with some of the humidity (moisture) removed. The moisture exits through a condensate drain system. A motor/blower assembly moves the indoor air through the system.
2. The compressor, which is a sealed pump that moves the refrigerant through the system.
3. The condenser (outdoor) coil where the heat that was absorbed from the indoor space is discharged to the outdoor environment. A motor/fan system moves the outdoor air across the condenser coil.

A properly sized air conditioner cannot cool a structure off rapidly, and instead will pull down the temperature slowly. It also will remove a certain amount of moisture (humidity) from the circulating air

stream in the process. It may take several hours to pull down a hot, moist building or structure on initial startup, or anytime the system has been turned off for a long period of time. It is generally best to set the thermostat at a comfortable temperature and let it control the system as needed, rather than turning it on and off.

Moisture (humidity) removal with a conventional air conditioner (cooling) unit, or heat pump when operating in the cooling mode, is not directly controlled and is a by-product of the unit operating to control temperature in response to the temperature (thermostat) control device. Oversized equipment can easily control temperature but will have short run-times, thus reducing its ability to remove moisture from the circulating air stream. There are also many additional influences that can affect humidity levels within the conditioned space such as laundry appliances, cooking, showers, exhaust fans, and any other items that can generate moisture or affect its removal from the space. Therefore, while operation of the air conditioning or heat pump system in the cooling mode will remove some amount of moisture as it reduces the air temperature, precise humidity regulation in the conditioned space cannot be assured and additional equipment such as a dedicated dehumidifier may be required.

HEAT PUMP (Air-to-Air)

A heat pump is a refrigerant-based system that has additional components and controls that both heats and cools using a compressor for both modes of operation. Most heat pumps will also be equipped with some amount of electric heat to supplement the heating capacity of the compressor system on an as needed basis. This operation is entirely automatic and is controlled by the indoor thermostat, and possibly also an outdoor thermostat.

COOLING MODE

The cooling mode of a heat pump is exactly the same as that described for an Air Conditioner in the above section.

HEAT PUMP (HEATING MODE)

The system operates in reverse cycle, meaning that it absorbs and moves heat from the outdoors and transfers it indoors to be rejected into the circulating air stream. Even though it seems cold to humans, there is usable heat that can be extracted efficiently from the outdoor air down to 0 degrees F, although the colder the air is there is less heat to extract and the operating efficiency is diminished.

DEFROST CYCLE

When operating in the heating mode, the outdoor coil will be colder than the outdoor air that is forced over it by the fan system. When the outdoor air temperature is above approximately 40°F, moisture can accumulate on the coil and it will drain down and out the base of the unit. As the air temperature gets below approximately 40°F, the coil temperature will start to drop below 32°F, and frost or ice will begin to form on the coil.

An automatic defrost system keeps track of system run time when the outdoor coil temperature is in the freezing zone, and will initiate a defrost cycle at the appropriate time. The unit continues to operate during the defrost cycle, but the outdoor fan motor will stop and the reversing valve will shift positions to flow hot refrigerant gas through the outdoor coil to melt the accumulated frost. Water will start to drain freely from the unit, and there may be steam emit from the unit.

The length of the defrost cycle will vary depending upon actual outdoor temperature, humidity levels and amount of accumulated frost. It could range from 1-2 minutes up to but not exceeding 10 minutes. When the defrost cycle terminates, the reversing valve will shift back to heating mode and the outdoor fan will restart. There is typically a large puff of steam emitted as the fan restarts.

When the heat pump shifts from cool to heating mode, from heating to cooling mode, and especially during defrost cycles, there will be a pressure transfer sound heard as the reversing valve redirects the flow of refrigerant. This is commonly described as a hissing noise and is a normal sound for this type equipment.

For air source heat pumps, it is important to keep heavy snow from accumulating around the machine to the point of blocking the inlet and outlet openings to the outdoor coil section. For wall mounted or other equipment that is elevated, this should not be a factor; but for equipment installed on or near the ground, this can be an issue in areas prone to heavy and/or blowing snow. The air source heat pump cannot operate effectively and efficiently when snowbound just as a car cannot function well in heavy snow conditions.

HEAT PUMP (Water-to-Air)

These types of heat pumps are also commonly referred to as water source or geothermal systems. Just like the air source heat pump, they are refrigerant-based systems that both heats and cools using a compressor for both modes of operation. The primary difference is that the system uses water or antifreeze protected water solution instead of an air-cooled outdoor heat transfer coil, and there is no outdoor motor/fan system but instead a water pump to provide adequate water flow to the system.

COOLING MODE

The cooling mode of a water-to-air heat pump is exactly the same as that described for an air conditioner in the above section for Air Conditioners, except that the outdoor coil uses water instead of air for the heat transfer medium.

HEAT PUMP (HEATING MODE)

The system operates in reverse cycle, meaning that it acquires and moves heat from the water supply flowing through the water to refrigerant coil, and transfers it indoors to be rejected into the circulating air stream.

Most water-to-air heat pumps (but not all) will also be equipped with some amount of electric heat to supplement the heating capacity of the compressor system on an as needed basis. This operation is entirely automatic and is controlled by the indoor thermostat.

Because of the design of water-to-air heat pumps and the water temperatures involved, no defrost system is required as in air-to-air heat pumps.

WATER SUPPLY SYSTEMS

Depending upon type and application of the water-to-air heat pump, the water side of the system could be one of the following:

1. Individual closed loop buried in a trench or vertical bore hole(s).
2. Individual loop submerged in a pond.
3. Water supplied from a well and discharged into pond, stream, ditch or another well.
4. Water supplied from a boiler/tower system, typically only in larger multi-unit installations.

VENTILATION

Many Bard systems have the capability of various ventilation packages available (either factory or field installed) directly into the basic system. These systems can be described as follows:

1. Barometric fresh air damper
2. Motorized fresh air damper
3. Commercial room ventilator
4. Economizer
5. Energy recovery ventilator

All of these ventilation systems, if installed, are different and are used for different reasons. They may also have different control strategies. Consult your installer and/or Service Company to determine if your installation has any of these devices, and for any instructions or maintenance requirements you should be aware of as the user.

DEHUMIDIFICATION CIRCUITS

Many Bard systems, typically those used in schools or other commercial applications, have a dedicated dehumidification capability by having a special additional refrigeration circuit (factory installed option only) in addition to the basic system. These special systems, sometimes also referred to as hot gas reheat, are designed to control humidity on demand from a humidity controller much the same as the basic cooling and/or heating system is controlled by a wall thermostat.

Consult your installer and/or Service Company to determine if your installation has any of these devices, and for any instructions or maintenance requirements you should be aware of as the user.

AUTOMATIC CONTROL SYSTEMS

THERMOSTATS

There are many types of thermostats available to properly control your system, and these can vary in features and some functions depending upon the type of system (air conditioner, heat pump, etc.) installed and any special options (ventilation, supplemental heat, etc.) that may be installed.

Approved compatible thermostats are available from Bard Manufacturing Company for all applications, and since these can vary in numerous features and functions, it is not possible to adequately discuss them all in this User's Guide. Many installers also install thermostats other than those offered by Bard, and must determine proper compatibility prior to installation.

In addition, many schools and similar institutions may utilize central energy management systems (EMS) or direct digital control (DDC) systems.

In all circumstances have your installer, Service Company or building administrator or maintenance department personnel instruct you as to proper operation of your specific thermostat or temperature control system.

HUMIDISTATS (HUMIDITY CONTROLLERS)

All systems with dedicated dehumidification (hot gas reheat) circuits also require a humidity controller (also called humidistat or de-humidistat) in addition to a thermostat for proper control.

The devices may or may not be adjustable, and if adjustable should only be adjusted by the person(s) responsible for overall building control conditions. Normal settings would be somewhere between

50 and 60% Relative Humidity (RH) and typically affords acceptable human comfort conditions for most individuals, and under no circumstances should be set lower than 40% as overcooling of the conditioned space and/or freeze-ups of the indoor coil may occur.

INSUFFICIENT COOLING OR HEATING

In extremely hot or cold weather your system will continue to deliver its normal supply of conditioned air. If the unit operates but fails to provide sufficient comfort, check the following before calling your Service Company:

1. Be sure the thermostat setting is correct.
2. Check the air filters, and replace or clean if dirty.
3. Make sure that air can circulate freely throughout the conditioned space, and that all supply registers and return air grilles are not blocked.
4. Make sure that the outdoor coil is not blocked with any foreign matter, or otherwise restricted with any growth or other items.

FAILURE TO OPERATE

Check the following before calling your Service Company:

1. Be sure the thermostat setting is correct.
2. Check the air filters, and replace or clean if dirty.
3. Make sure that the power supply, and gas or water supplies if applicable, are “On”.
4. Make sure that air can circulate freely throughout the conditioned space, and that all supply registers and return air grilles are not blocked.
5. Make sure that the outdoor coil is not blocked with any foreign matter, or otherwise restricted with any growth or other items.

LUBRICATION REQUIREMENTS

All indoor and outdoor air-moving motors are permanently lubricated, and require no re-oiling. If an Energy Recovery Ventilator (ERV) is installed in your system, have your Service Company inspect annually and perform maintenance as outlined in the ERV Installation and Operating Instructions.

PERIODIC MAINTENANCE

Periodic maintenance must be conducted on your system to insure maximum performance, especially during peak operating periods and conditions.

1. Keeping the air filters clean and recognizing the importance of a clean outdoor coil are key elements. These are user responsibilities, either all or at least in part, and if they cannot be fulfilled by the user, arrangements should be made with your Service Company.
2. There is a condensate drain system for all air conditioners and heat pumps, and this must be kept open and free to convey the condensate generated by the operation of the equipment to a suitable location, typically either an internal drain or outdoor location. Depending upon the specific installation, the user would at least be aware of the dram mechanism and know what to expect.
   If any questions, it should be reviewed and discussed with your installer and/or Service Company.

3. All heating and cooling systems should have periodic inspections made by a trained professional, who has the experience, knowledge, training, licensing, certifications, and the necessary tools and equipment required to do these tasks properly and in accordance with approved or mandated procedures.
4. The maintenance procedures and frequency of routine service can vary depending upon actual type of equipment in use, type of building or facility, and other factors that can impact how often a machine must be serviced.
5. Proper and routine maintenance and service will protect your investment and help extend the service life of the product, and also help ward off more extensive and expensive repairs.

HELPFUL HINTS AND GOOD OPERATING PRACTICES

The following information will help you enjoy the full comfort and benefits of your Bard cooling and heating system, maximize the performance and efficiency, and help extend the life of your system:

1. Always keep the equipment in peak operating condition with routine scheduled maintenance, especially for the air filters and to assure clean outdoor coil.
2. For most efficient operation, set the thermostat at the temperature you prefer, and then let it take control. If any changes to the settings are required, they should be made in small adjustments and the system be allowed time to respond. Rapid changes either up or down should not be done.
3. Setting the thermostat very high does not make the system heat faster, and setting it very low does not make it cool faster.
4. It is not recommended to turn the system “Off” and then back “On” when you need it. This can allow temperature and humidity to build up in warm weather conditions and force the system to run continuously to try and catch up. If the building is to be unoccupied for a lengthy period, it is best to adjust the thermostat to a reasonable higher (or lower depending upon the season) setting rather than turning it completely off. Upon return, the inside conditions will not be totally out of control, and recovery time to desired conditions would be much shorter.
5. Keep all supply registers open and all returns free and unrestricted. The heating and cooling system is designed to have a certain amount of airflow for proper operation. Therefore, closing off registers, in unused rooms as an example, could reduce airflow below acceptable levels and should not be done without review by your Service Company who can access the overall situation and advise you accordingly.
6. Heat pumps, especially air-to-air heat pumps, may have the system (compressor) run continuously at lower outdoor temperatures, and this is normal. The heat pump (compressor) mode is controlled by the 1st stage of the thermostat, and delivers the most efficient heat. As the outdoor temperature drops off, the heat pump mode heat will also diminish (because there is less heat in the outdoor air to absorb), and must be supplemented by the 2nd stage electric heat, which is not as efficient as the heat pump. The thermostat automatically controls everything, and the backup electric heat will only operate on demand as needed to maintain the desired temperature.
7. The thermostat is the user’s primary connection to the system, so it is very important to have a thorough understanding of how it works and how to use it properly. Since there are many different types of controls available, and can vary depending upon what type of heating/cooling system you may have. Have your installer or Service Company explain and demonstrate proper operation of the controls.
8. Make sure you thoroughly understand how the heating and cooling system itself is intended to operate and what to expect from it. Have your installer or Service Company explain and demonstrate proper operation of the heating and cooling system.

INSTALLATION INSTRUCTIONS

WALL MOUNTED
PACKAGE AIR CONDITIONERS

Model:

W12A1

Bard Manufacturing Company, Inc.
Bryan, Ohio 43506

Since 1914....Moving ahead just as planned.

CLIMATE CONTROL SOLUTIONS

Manual :	2100-509A
Supersedes:	2100-509
File:	Volume III Tab 16
Date:	09-30-09

© Copyright 2008

CONTENTS

Getting Other Informations and Publications 3

Wall Mount General Information
Air Conditioner Wall Mount Model Nomenclature 4
Shipping Damage 6
General 6
Duct Work 7
Filters 7
Fresh Air Intake 7
Condensate Drain 7

Installation Instructions
Wall Mounting Information 8
Mounting the Unit 8
Wiring – Main Power 12
Wiring – Low Voltage Wiring 12

Start Up
Requirements: R-410A 13
Important Installer Note 14
Service Hints 14
High Pressure Switch 14
Sequence of Operation 14
Compressor Control Module 14
Adjustments 15
Pressure Service Ports 15

Troubleshooting
Fan Blade Setting Dimension 16
Refrigerant Charge 16
Pressure Table 17
Optional Field Installed Accessories 17

Figures
Figure 1 Unit Dimensions 5
Figure 2 Blower Damper Assembly 7
Figure 3 Mounting Instructions 9
Figure 4 Wall Mounting Instructions 10
Figure 5 Wall Mounting Instructions 10
Figure 6 Common Wall Mounting Instructions 11
Figure 7 Fan Blade Setting Dimensions 16

Tables
Table 1 Electric Heat Table 4
Table 2 Electrical Specifications 6
Table 3 Fan Blade Dimensions 16
Table 4 Suction Line Temperatures 16
Table 5 Recommended Operating Ranges 16
Table 6 Indoor Blower Performance 16
Table 7 Maximum ESP of Operation Electric Heat Only 16
Table 8 Pressure Table - Cooling 17
Table 9 Optional Accessories 17

GETTING OTHER INFORMATION and PUBLICATIONS

These publications can help you install the air conditioner or heat pump. You can usually find these at your local library or purchase them directly from the publisher. Be sure to consult current edition of each standard.

National Electrical Code ..... ANSI/NFPA 70

Standard for the Installation of ..... ANSI/NFPA 90A
Air Conditioning and
Ventilating Systems

Standard for Warm Air Heating ..... ANSI/NFPA 90B
and Air Conditioning Systems

Load Calculation for ..... ACCA Manual J
Residential Winter and
Summer Air Conditioning

Duct Design for ..... ACCA Manual D
Residential Winter and
Summer Air Conditioning
and Equipment Selection

For more information, contact these publishers:

ACCA **Air Conditioning Contractors of America**
1712 New Hampshire Avenue NW
Washington, DC 20009
Telephone: (202) 483-9370
Fax: (202) 234-4721

ANSI **American National Standards Institute**
11 West Street, 13th Floor
New York, NY 10036
Telephone: (212) 642-4900
Fax: (212) 302-1286

ASHRAE **American Society of Heating, Refrigerating and Air Conditioning Engineers, Inc.**
1791 Tullie Circle, NE
Atlanta, GA 30329-2305
Telephone: (404) 636-8400
Fax: (404) 321-5478

NFPA **National Fire Protection Association**
Batterymarch Park
P.O. Box 9101
Quincy, MA 02269-9901
Telephone: (800) 344-355
Fax: (617) 984-7057

Manufactured under the following U.S. patent numbers:

5,485,878; and 5,301,744

WALL MOUNT GENERAL INFORMATION

AIR CONDITIONER WALL MOUNT MODEL NOMENCLATURE

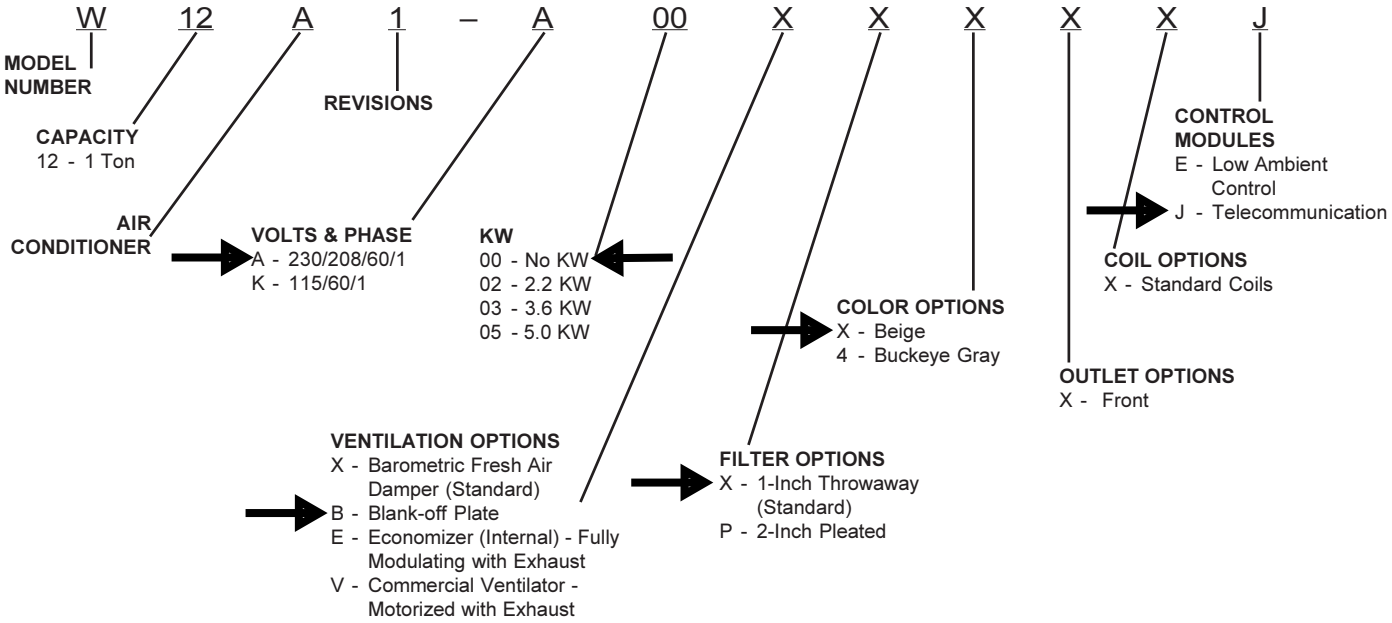

TABLE 1
ELECTRIC HEAT TABLE

Models	W12A1-A				W12A1-K	
	240V		208V		120V	
KW	A	① BTU	A	① BTU	A	① BTU
02					18.3	7,985
03	15.0	12,760	13.0	9,705		
05	20.8	17,540	18.1	13,275		

① With blower watts included

FIGURE 1
UNIT DIMENSIONS

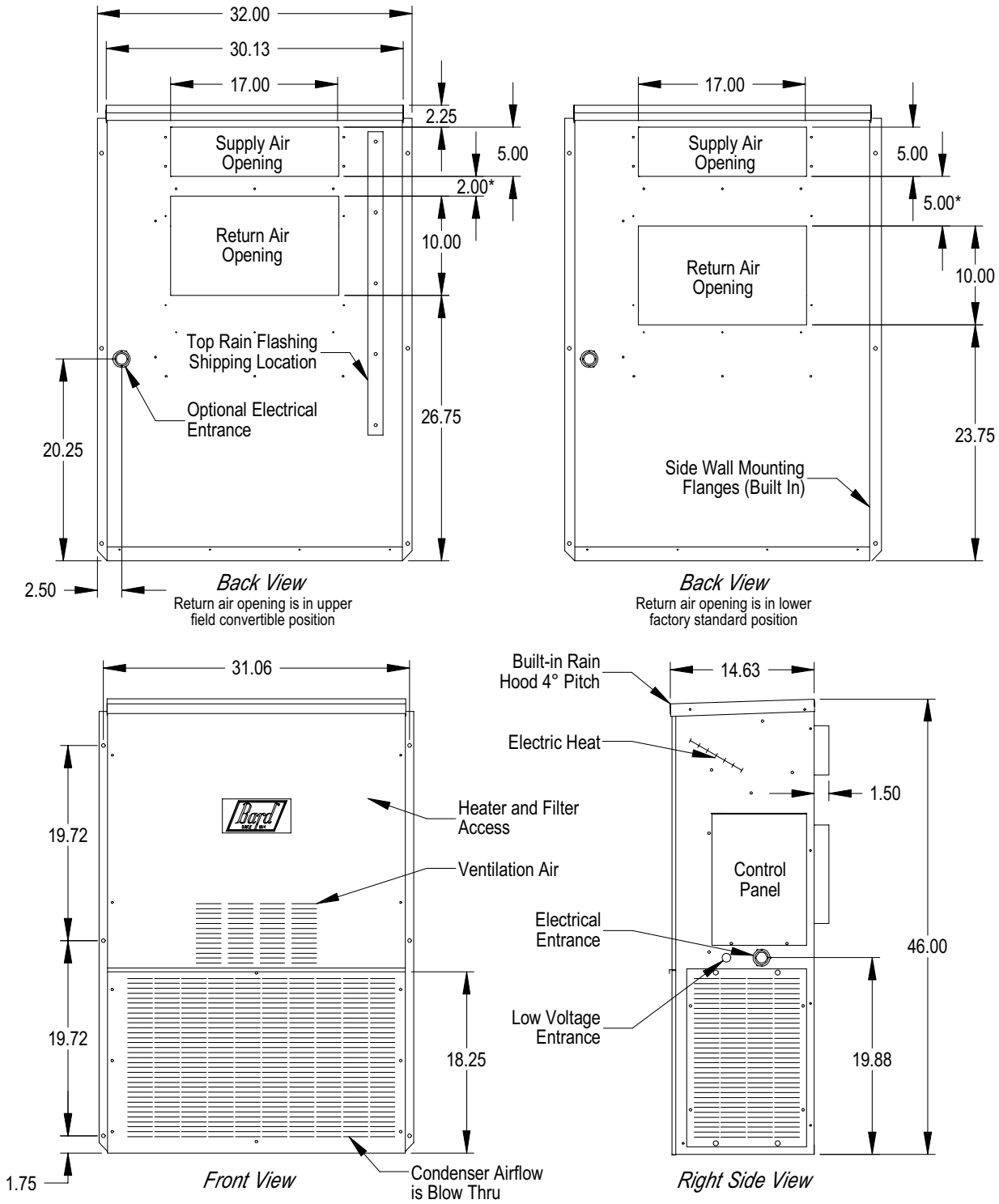

(*) Position of return air flanges are interchangeable between two positions. Factory built at 5 inches.
Note: Maintain a minimum of 20 inches clearance on right side to allow access to control panel and allow proper airflow to outdoor condenser coil. Allow 15 inches on left side.

MIS-2608

(*) Position of return air flanges are interchangeable between two positions. Factory built at 5 inches.

NOTE: Maintain a minimum of 20 inches clearance on right side to allow access to control panel and allow proper airflow to outdoor condenser coil. Allow 15 inches on left side.

TABLE 2
ELECTRICAL HEAT SPECIFICATIONS

SINGLE CIRCUIT						
Models	**Rated Volts and Phase**	**No. Field Power Circuits**	③ **Minimum Circuit Ampacity**	① **Maximum External Fuse or Circuit Breaker**	② **Field Power Wire Size**	② **Ground Wire Size**
W12A1-A00	230/208-1	1	9	15	14	14
A03		1	20	20	12	12
A05		1	28	30	10	10
W12A1-K00	115-1	1	20	30	10	10
K02		1	29	30	10	10

① Maximum size of the time delay fuse or HACR type circuit breaker for protection of field wiring conductors.

② Based on 75°C copper wire. All wiring must conform to NEC and all local codes.

③ These "Minimum Circuit Ampacity" values are to be used for sizing the field power conductors. Refer to the National Electrical Code (latest revision), article 310 for power conductor sizing.

CAUTION: *When more than one field power conductor circuit is run through one conduit, the conductors must be derated. Pay special attention to note 8 of table 310 regarding Ampacity Adjustment Factors when more than 3 conductors are in a raceway.*

SHIPPING DAMAGE

Upon receipt of equipment, the carton should be checked for external signs of shipping damage. If damage is found, the receiving party must contact the last carrier immediately, preferably in writing, requesting inspection by the carrier's agent.

GENERAL

The equipment covered in this manual is to be installed by trained, experienced service and installation technicians.

The refrigerant system is completely assembled and charged. All internal wiring is complete.

The unit is designed for use with or without duct work. Flanges are provided for attaching the supply and return air ducts.

These instructions explain the recommended method to install the air cooled self-contained unit and the electrical wiring connections to the unit.

These instructions and any instructions packaged with any separate equipment required to make up the entire air conditioning system should be carefully read before beginning the installation. Note particularly "Starting Procedure" and any tags and/or labels attached to the equipment.

While these instructions are intended as a general recommended guide, they do not supersede any national and/or local codes in any way. Authorities having jurisdiction should be consulted before the installation is made. See Page 3 for information on codes and standards.

Size of unit for a proposed installation should be based on heat loss/gain calculation made according to methods of Air Conditioning Contractors of America (ACCA). The air duct should be installed in accordance with the Standards of the National Fire Protection Association for the Installation of Air Conditioning and Ventilating Systems of Other Than Residence Type, NFPA No. 90A, and Residence Type Warm Air Heating and Air Conditioning Systems, NFPA No. 90B. Where local regulations are at a variance with instructions, installer should adhere to local codes.

DUCT WORK

All duct work, supply and return must be properly sized for the design air flow requirement of the equipment. Air Conditioning Contractors of America (ACCA) is an excellent guide to proper sizing. All duct work or portions thereof not in the conditioned space should be properly insulated in order to both conserve energy and prevent condensation or moisture damage.

Refer to Table 7 for maximum static pressure available for duct design.

Design the duct work according to methods given by the Air Conditioning Contractors of America (ACCA). When duct runs through unheated spaces, it should be insulated with a minimum of one inch of insulation. Use insulation with a vapor barrier on the outside of the insulation. Flexible joints should be used to connect the duct work to the equipment in order to keep the noise transmission to a minimum.

Ducts through the walls must be insulated and all joints taped or sealed to prevent air or moisture entering the wall cavity.

Some installations may not require any return air duct. It is recommended that on this type of installation that a filter grille be located in the wall. Filters must be of sufficient size to allow a maximum velocity of 400 FPM.

NOTE: If no return air duct is used, applicable installation codes may limit this cabinet to installation only in a single story structure.

FILTERS

A one inch throwaway filter is supplied with each unit. The filter slides into position making it easy to service. This filter can be serviced from the outside by removing the service door. A 2-inch pleated filter is also available as an optional accessory. The internal filter brackets are adjustable to accommodate the 2-inch filter by bending the metal tabs holding the 1-inch filter down. There are two tabs on each side of the filter.

FRESH AIR INTAKE

All units are built with fresh air inlet slots punched in the service panel.

If the unit is equipped with a fresh air damper assembly, the assembly is shipped already attached to the unit. The damper blade is locked in the closed position. To allow the damper to operate, the maximum and minimum blade position stops must be installed. See Figure 2.

All capacity, efficiency and cost of operation information as required for Department of Energy “Energyguide” Fact Sheets is based upon the fresh air blank-off plate in place and is recommended for maximum energy efficiency.

The blank-off plate is available upon request from the factory and is installed in place of the fresh air damper shipped with each unit.

CONDENSATE DRAIN

This unit employs an automatic condensate disposal system consisting of a base drain pan, drain valve and fan blade with slinger ring. A plastic drain hose extends from the evaporator drain pain at the top of the unit to the base drain pan at the bottom. At temperatures above 40°, the drain valve located between the condenser coil and fan shroud is closed allowing water to build up in the base to a height of 5/8" to 3/4". The fan blade with slinger then rotates in this water and throws the water onto the condenser coil. This disposes of the water by evaporating it on the hot condenser.

At temperatures below 40°, the drain valve opens draining the base pan and preventing freeze ups that could damage the coil or fan blade.

FIGURE 2
FRESH AIR DAMPER

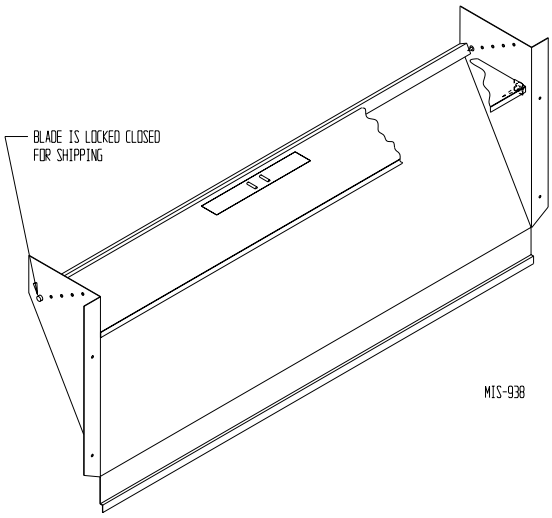

INSTALLATION INSTRUCTIONS

WALL MOUNTING INFORMATION

1. These units are secured by wall mounting brackets which secure the unit to the outside wall surface at both sides.
2. On wood frame walls, the wall construction must be strong and rigid enough to carry the weight of the unit without transmitting any unit vibration.
3. Concrete block walls must be thoroughly inspected to insure that they are capable of carrying the weight of the installed unit.

MOUNTING THE UNIT

1. Two holes, for the supply and return air openings, must be cut through the wall as shown in Figure 3.

   NOTE: If the combination SUPPLY / RETURN Grille Assembly model CRSG-1 is to be used in conjunction with this unit a different size wall opening is required.

2. Locate and mark lag bolt locations, if desired. See Figure 3.
3. Hook top rain flashing under back bend of top. Top rain flashing is shipped attached to the back of the unit on the right side.
4. Position unit in opening and secure with 5/16 lag bolts; use 7/8 inch diameter flat washers on the lab bolts.
5. Secure rain flashing to wall and caulk across entire length of top. See Figure 3.
6. For additional mounting rigidity, the return air and supply air frames or collars can be drilled and screwed or welded to the structural wall itself (depending upon wall construction). Be sure to observe required clearance if combustible wall.
7. On side-by-side installations, maintain a minimum of 20 inches clearance on right side to allow access to control panel and allow proper airflow to outdoor coil. Additional clearance may be required to meet local or national codes.

FIGURE 3
MOUNTING INSTRUCTIONS

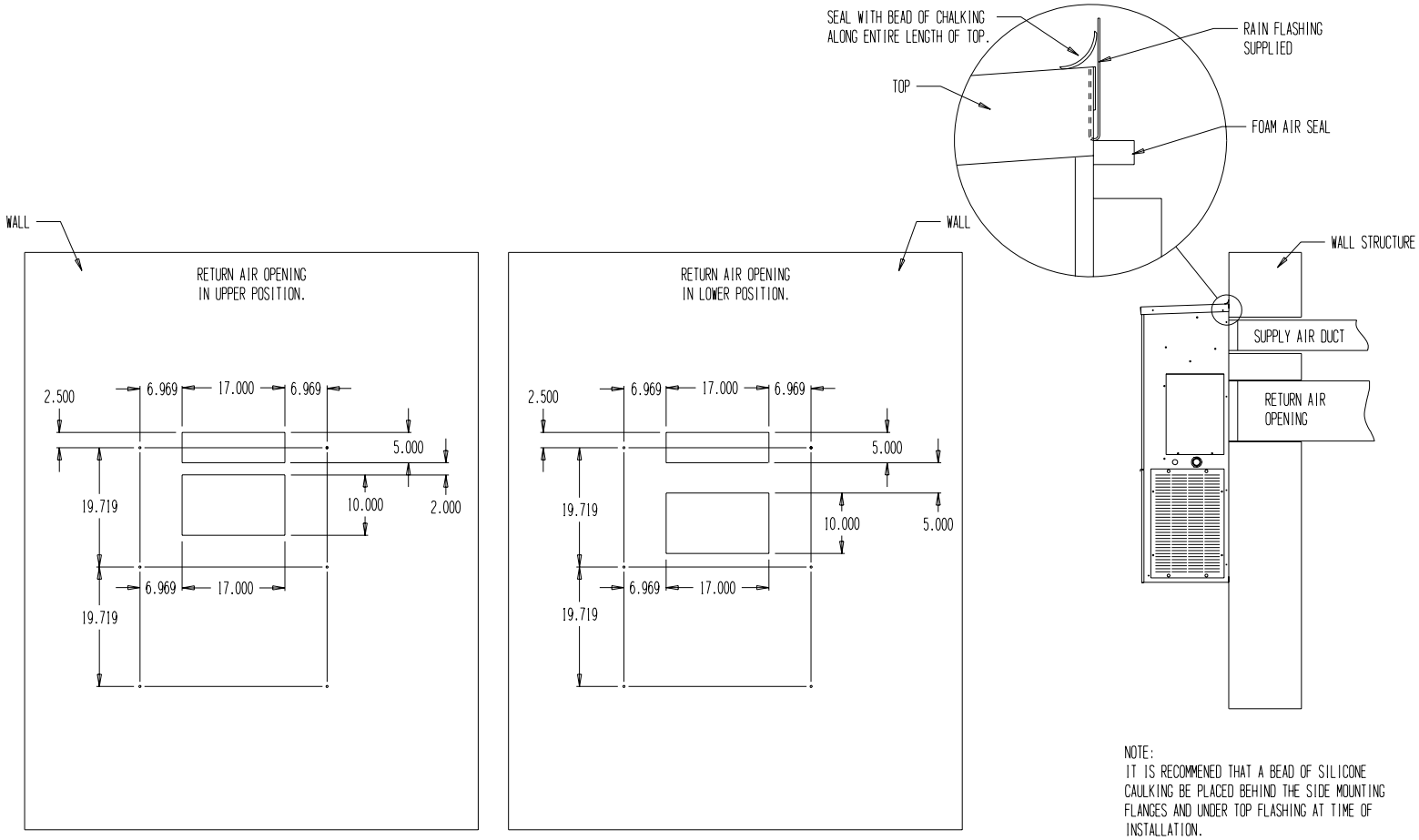

NOTE:
IT IS RECOMMENED THAT A BEAD OF SILICONE CAULKING BE PLACED BEHIND THE SIDE MOUNTING FLANGES AND UNDER TOP FLASHING AT TIME OF INSTALLATION.

MIS-501

FIGURE 4
WALL MOUNTING INSTRUCTIONS

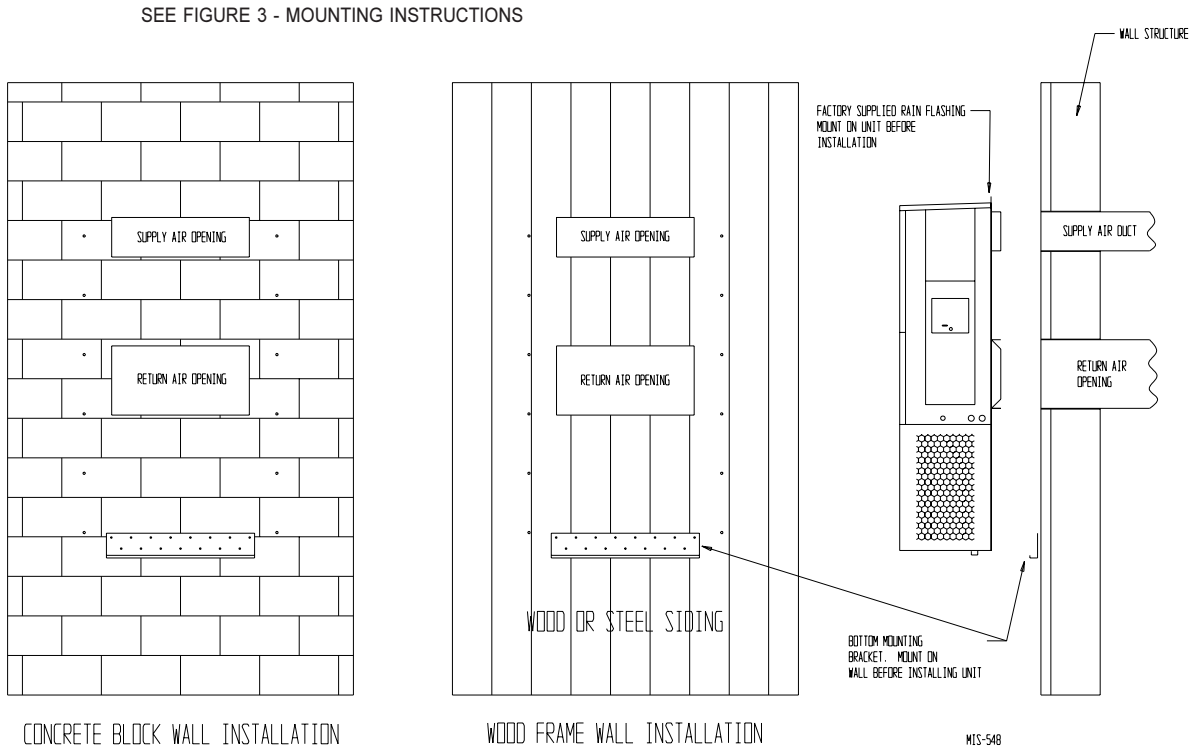

FIGURE 5
WALL MOUNTING INSTRUCTIONS

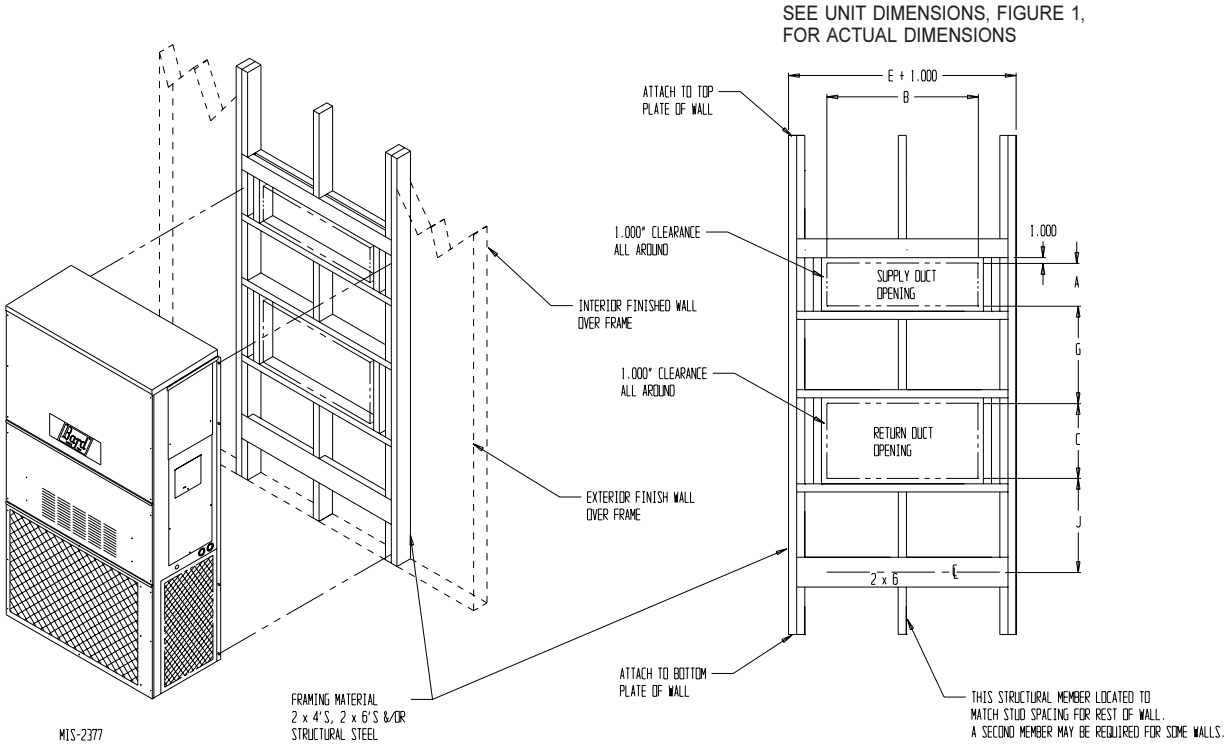

FIGURE 6
COMMON WALL-MOUNTING INSTALLATIONS

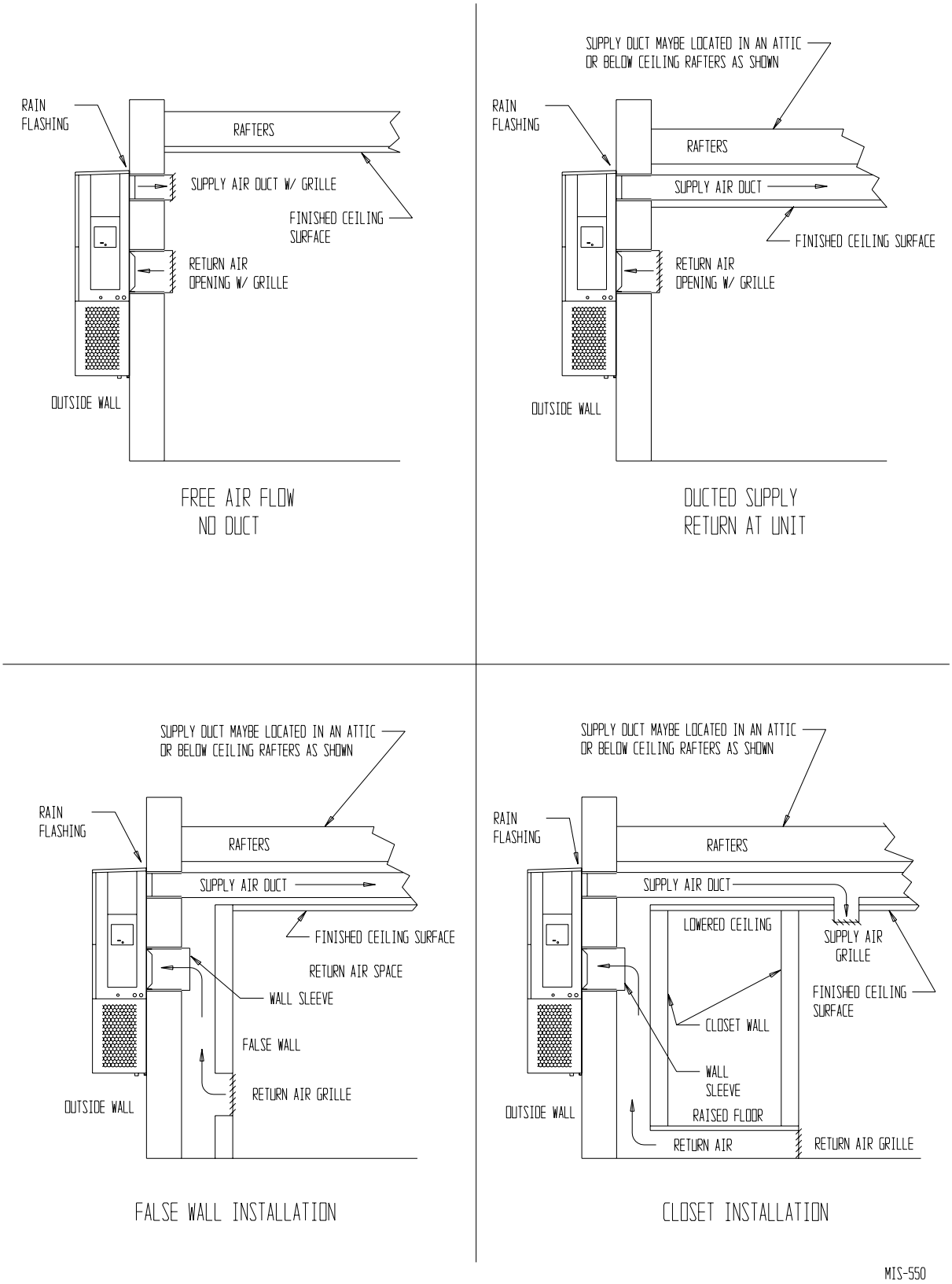

WIRING – MAIN POWER

Refer to the unit rating plate for wire sizing information and maximum fuse or "HACR" type circuit breaker size. Each outdoor unit is marked with a "Minimum Circuit Ampacity". This means that the field wiring used must be sized to carry that amount of current. Depending on the installed KW of electric heat, there may be two field power circuits required. If this is the case, the unit serial plate will so indicate. All models are suitable only for connection with copper wire. Each unit and/or wiring diagram will be marked "Use Copper Conductors Only". These instructions ***must be*** adhered to. Refer to the National Electrical Code (NEC) for complete current carrying capacity data on the various insulation grades of wiring material. All wiring must conform to NEC and all local codes.

The electrical data lists fuse and wire sizes (75°C copper) for all models, including the most commonly used heater sizes. Also shown are the number of field power circuits required for the various models with heaters.

The unit rating plate lists a "Maximum Time Delay Relay Fuse" of "HACR" type circuit breaker that is to be used with the equipment. The correct size must be used for proper circuit protection and also to assure that there will be no nuisance tripping due to the momentary high starting current of the compressor motor.

For wiring size and connections, refer to Wiring Manual 2100-507.

WIRING – LOW VOLTAGE WIRING

230/208, 1 phase equipment use dual primary voltage transformers. All equipment leaves the factory wired on 240V tap. For 208V operation, reconnect from 240V to 208V tap. The acceptable operating voltage range for the 240 and 208V taps are:

TAP	RANGE
240	253 - 216
208	220 - 187

NOTE: The voltage should be measured at the field power connection point in the unit and while the unit is operating at full load (maximum amperage operating condition).

THESE UNITS REQUIRE R-410A REFRIGERANT AND POLYOL ESTER OIL.

GENERAL:

1. Use separate service equipment to avoid cross contamination of oil and refrigerants.
2. Use recovery equipment rated for R-410A refrigerant.
3. Use manifold gauges rated for R-410A (800 psi/250 psi low).
4. R-410A is a binary blend of HFC-32 and HFC-125.
5. R-410A is nearly azeotropic - similar to R-22 and R-12. Although nearly azeotropic, charge with liquid refrigerant.
6. R-410A operates at 40-70% higher pressure than R-22, and systems designed for R-22 cannot withstand this higher pressure.
7. R-410A has an ozone depletion potential of zero, but must be reclaimed due to its global warming potential.
8. R-410A compressors use Polyol Ester oil.
9. Polyol Ester oil is hygroscopic; it will rapidly absorb moisture and strongly hold this moisture in the oil.
10. A liquid line dryer must be used - even a deep vacuum will not separate moisture from the oil.
11. Limit atmospheric exposure to 15 minutes.
12. If compressor removal is necessary, always plug compressor immediately after removal. Purge with small amount of nitrogen when inserting plugs.

TOPPING OFF SYSTEM CHARGE

If a leak has occurred in the system, Bard Manufacturing recommends reclaiming, evacuating (see criteria above), and charging to the nameplate charge. If done correctly, topping off the system charge can be done without problems.

With R-410A, there are no significant changes in the refrigerant composition during multiple leaks and recharges. R-410A refrigerant is close to being an azeotropic blend (it behaves like a pure compound or single component refrigerant). The remaining refrigerant charge, in the system, may be used after leaks have occurred and then "top-off" the charge by utilizing the charging charts on the inner control panel cover as a guideline.

REMEMBER: When adding R-410A refrigerant, it must come out of the charging cylinder/tank as a liquid to avoid any fractionation, and to insure optimal system performance. Refer to instructions for the cylinder that is being utilized for proper method of liquid extraction.

⚠ WARNING

Failure to conform to these practices could lead to damage, injury or death.

SAFETY PRACTICES:

1. Never mix R-410A with other refrigerants.
2. Use gloves and safety glasses, Polyol Ester oils can be irritating to the skin, and liquid refrigerant will freeze the skin.
3. Never use air and R-410A to leak check; the mixture may become flammable.
4. Do not inhale R-410A – the vapor attacks the nervous system, creating dizziness, loss of coordination and slurred speech. Cardiac irregularities, unconsciousness and ultimate death can result from breathing this concentration.
5. Do not burn R-410A. This decomposition produces hazardous vapors. Evacuate the area if exposed.
6. Use only cylinders rated DOT4BA/4BW 400.
7. Never fill cylinders over 80% of total capacity.
8. Store cylinders in a cool area, out of direct sunlight.
9. Never heat cylinders above 125°F.
10. Never trap liquid R-410A in manifold sets, gauge lines or cylinders. R-410A expands significantly at warmer temperatures. Once a cylinder or line is full of liquid, any further rise in temperature will cause it to burst.

START UP

IMPORTANT INSTALLER NOTE

For improved start up performance, wash the indoor coil with a dishwasher detergent.

SERVICE HINTS

1. Caution owner to maintain clean air filters at all times. Also not to needlessly close off supply and return air registers. This reduces airflow through the system which shortens equipment service life as well as increasing operation costs.
2. The unit is equipped with a high pressure cut out switch.
3. Check all power fuses or circuit breakers to be sure they are the correct rating.
4. Periodic cleaning of the outdoor coil to permit full and unrestricted airflow circulation is essential.

HIGH & LOW PRESSURE SWITCH

The W12A1 models are supplied with a remote reset high and low pressure switch. If tripped, this pressure switch may be reset by turning the thermostat off then back on again.

SEQUENCE OF OPERATION

HEATING – Circuit R-Y makes at thermostat pulling in compressor contactor, starting the compressor and outdoor motor. The G (indoor motor) circuit is automatically completed on any call for cooling operation or can be energized by manual fan switch on subbase for constant air circulation. On a call for heating, circuit R-W1 make at the thermostat pulling in heat contact for the strip heat and blower operation.

COMPRESSOR CONTROL MODULE

The compressor control module is optional on the models covered by this manual. The compressor control is an anti-short cycle/lockout timer with high and low pressure switch monitoring and alarm relay output.

Adjustable Delay on Make and Break Timer

On initial power up or any time power is interrupted to the unit the *delay on make* period begins, which will be 2 minutes plus 10% of the *delay on break* setting. When the delay on make is complete and the high pressure switch (and low pressure switch if employed) is closed, the compressor contactor is energized. Upon shutdown the delay on break time starts and prevents restart until the delay on break and delay on make periods have expired.

During routine operation of the unit with no power interruptions the compressor will operate on demand with no delay.

High Pressure Switch and Lockout Sequence

If the high pressure switch opens, the compressor contactor will de-energize immediately. The lockout timer will go into a *soft lockout* and stay in soft lockout until the high pressure switch closes ***and*** the delay on break time has expired. If the high pressure switch opens again in this same operating cycle the unit will go into manual lockout condition and the alarm relay circuit will energize. Recycling the wall thermostat resets the manual lockout.

Low Pressure Switch, Bypass and Lockout Sequence

If the low pressure switch opens for more than 120 seconds, the compressor contactor will de-energize and go into a soft lockout. Regardless the state of the low pressure switch, the contactor will reenergize after the delay on make time delay has expired. If the low pressure switch remains open, or opens again for longer that 120 seconds, the unit will go into manual lockout condition and the alarm relay circuit will energize. Recycling the wall thermostat resets the manual lockout.

Alarm Relay Output

Alarm terminal is output connection for applications where alarm relay is employed. This terminal is powered whenever compressor is locked out due to HPC or LPC sequences as described.

NOTE: Both high and low pressure switch controls are inherently automatic reset devices. The high pressure switch and low pressure switch cut out and cut in settings are fixed by specific air conditioner or heat pump unit model. The lockout features, both soft and manual, are a function of the Compressor Control Module.

ADJUSTMENTS

Adjustable Delay on Make and Delay on Break Timer

The potentiometer is used to select Delay on Break time from 30 seconds to 5 minutes. Delay of Make (DOM) timing on power up and after power interruptions is equal to 2 minutes plus 10% of Delay of Break (DOB) setting:

0.5 minute (30 seconds)	DOB = 123 second DOM
1.0 minute (60 seconds)	DOB = 126 second DOM
2.0 minute (120 seconds)	DOB = 132 second DOM
3.0 minute (180 seconds)	DOB = 138 second DOM
4.0 minute (240 seconds)	DOB = 144 second DOM
5.0 minute (300 seconds)	DOB = 150 second DOM

During routine operation of the unit with no power interruptions the compressor will operate on demand with not delay.

Typical Settings for Dual Unit Installation:

Unit No. 1: DOB set at 2 minutes, and DOM is 132 seconds.

Unit No. 2: DOB set at 4 minutes, and DOM is 144 seconds.

PRESSURE SERVICE PORTS

High and low pressure service ports are installed on all units so that the system operating pressures can be observed. Pressure chart can be found later in the manual covering all models. It is imperative to match the correct pressure chart to the unit by model number.

TROUBLESHOOTING

FAN BLADE SETTING DIMENSIONS

Shown in Figure 7 is the correct fan blade setting dimension for proper air delivery across the outdoor coil.

Any service work requiring removal or adjustment in the fan and/or motor area will require that the dimension below be checked and blade adjusted in or out on the motor shaft accordingly.

FIGURE 7
FAN BLADE SETTING DIMENSION

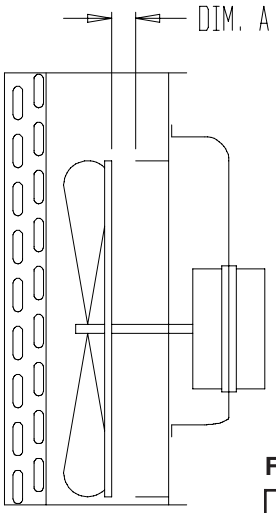

TABLE 3
FAN BLADE DIMENSION

Model	Dimension A
W12A1	1/2"

REFRIGERANT CHARGE

The correct system R-410A charge is shown on the unit rating plate. Optimum unit performance will occur with a refrigerant charge resulting in a suction line temperature (6" from compressor) as shown in Table 4. If charge quantity is in doubt, reclaim unit and recharge to factory nameplate quantity.

TABLE 4
SUCTION LINE TEMPERATURE

Model	Rated Airflow	95° OD Temperature	82° OD Temperature
W12A1	400	58 - 64	64 - 68

The suction line temperatures in Table 4 are based upon 80°F dry bulb / 67°F wet bulb (50% R.H.) temperature and rated airflow across the evaporator during cooling cycle.

TABLE 5
INDOOR BLOWER PERFORMANCE
CFM @ 230V / 115V

E.S.P. in H_2O	W12A1	
	230V / 115V	
	Dry / Wet High	Dry / Wet Low
.0	530 / 500	465 / 425
.1	485 / 460	415 / 400
.2	440 / 425	365 / 350
.3	390 / 375	315 / 300
.4	325 / 300	270 / 265

TABLE 6
RATED CFM AND ESP
RECOMMENDED AIRFLOW RANGE

Model	Rated CFM*	Rated ESP*	Recommended Airflow Range
W12A1	400	.10	500 - 300

* Rated CFM and ESP on low speed tap.

TABLE 7
MAXIMUM ESP OF OPERATION
ELECTRIC HEAT ONLY

Model	ESP
W12A1-A00	.35
A03	.35
A05	.35
W12A1-K00	.35
K02	.35

Values shown are for units equipped with STD 1" throwaway filters. Derate ESP by .15 for 2" pleated filters.

TABLE 8
PRESSURE TABLE

COOLING

Air Temperature Entering Outdoor Coil °F

Model	Return Air Temperature	Pressure	75°	80°	85°	90°	95°	100°	105°	100°	115°
W12A1	75 deg. DB 62 deg. WB	Low Side High Side	120 291	124 310	129 332	133 355	136 379	138 405	141 432	142 460	143 490
	80 deg. DB 67 deg. WB	Low Side High Side	128 298	133 318	138 340	142 364	145 389	148 415	151 443	152 472	153 503
	85 deg. DB 72 deg. WB	Low Side High Side	132 308	138 329	143 352	147 377	150 403	153 430	156 459	157 489	158 521

Low Side Pressure ±2 PSIG
High Side Pressure ±5 PSIG

TABLE 9
OPTIONAL FIELD INSTALLED ACCESSORIES

Model	Description	W12A1
BOP-1A	Blank Off Plate	X
BFAD-1	Barometric Fresh Air Damper	X
EIFM-1	Economizer with Exhaust	X
CMA-28	Low Ambient Control	X
CRVS-1	Commercial Ventilator - Spring Return	X

REPLACEMENT PARTS MANUAL

WALL MOUNTED PACKAGE AIR CONDITIONER

Model: W12A1

General Notes

- Revised and/or additional pages may be issued from time to time.
- A complete and current manual consists of pages shown in the following contents section.

Important

- Contact the installing and/or local Bard distributor for all parts requirements. Make sure you have the complete model and serial number available from the unit rating plates.

Contents

Description — Page

Cabinet Components
- Exploded View 2
- Usage List 3

Functional Components
- Exploded View 4
- Usage List 5

Control Panel
- Exploded View 5
- Usage List 7

Blower Assembly
- Exploded View 8
- Usage List 8

CLIMATE CONTROL SOLUTIONS

Bard Manufacturing Company, Inc.
Bryan, Ohio 43506

Since 1914...Moving ahead, just as planned.

Manual: 2110-487A
Supersedes: 2110-487
File: 2150-004, Tab 16
Date: 10-07-08

CABINET COMPONENTS

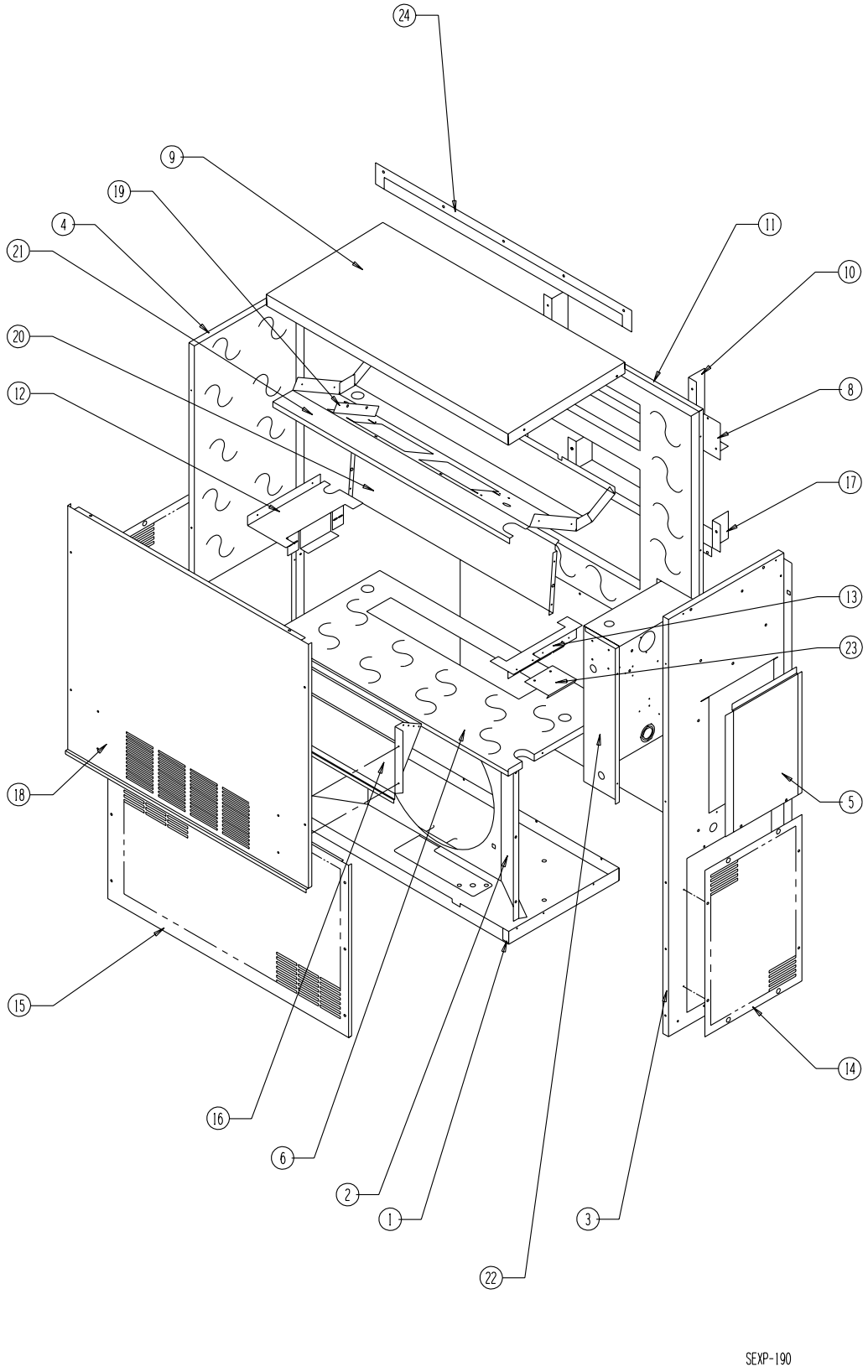

Drawing No.	Part No.	Description	W12A1-A	W12A1-K
1	S127-371-* ①	Lower Base	X	X
2	125-025	Fan Shroud	X	X
3	S500-275-* ①	Right Side	X	X
4	S500-274-* ①	Left Side	X	X
5	S133-120-* ①	Control Panel Cover (Outer)	X	X
6	520-243	Condenser Partition	X	X
8	111-037	Top Return Air Frame Angle	X	X
9	506-148-* ①	Top	X	X
10	111-036	Outlet Air Frame Angle	X	X
11	508-102	Back	X	X
12	113-197	Left Filter Bracket	X	X
13	113-198	Right Filter Bracket	X	X
14	118-033-* ①	Side Grille	2	2
15	119-034-* ①	Condenser Grille	X	X
16	BFAD-1	Fresh Air Damper Assembly	X	X
17	111-038	Bottom Return Air Frame Angle	X	X
18	S514-085-* ①	Upper Front	X	X
19	113-176	Heater Bracket	X	X
20	121-245	Return Partition	X	X
21	S121-244	Drain Pan	X	X
22	Control Panel Assembly	See Control Panel Assembly Drawing and Parts List	X	X
23	135-138	Fill Plate	X	X
24	113-178-* ①	Top Rain Flashing	X	X

① *Exterior cabinet parts are manufactured with various paint color options. To insure that you receive the proper paint color, you must include the complete model and serial number of the unit for which cabinet parts are being ordered.*

FUNCTIONAL COMPONENTS

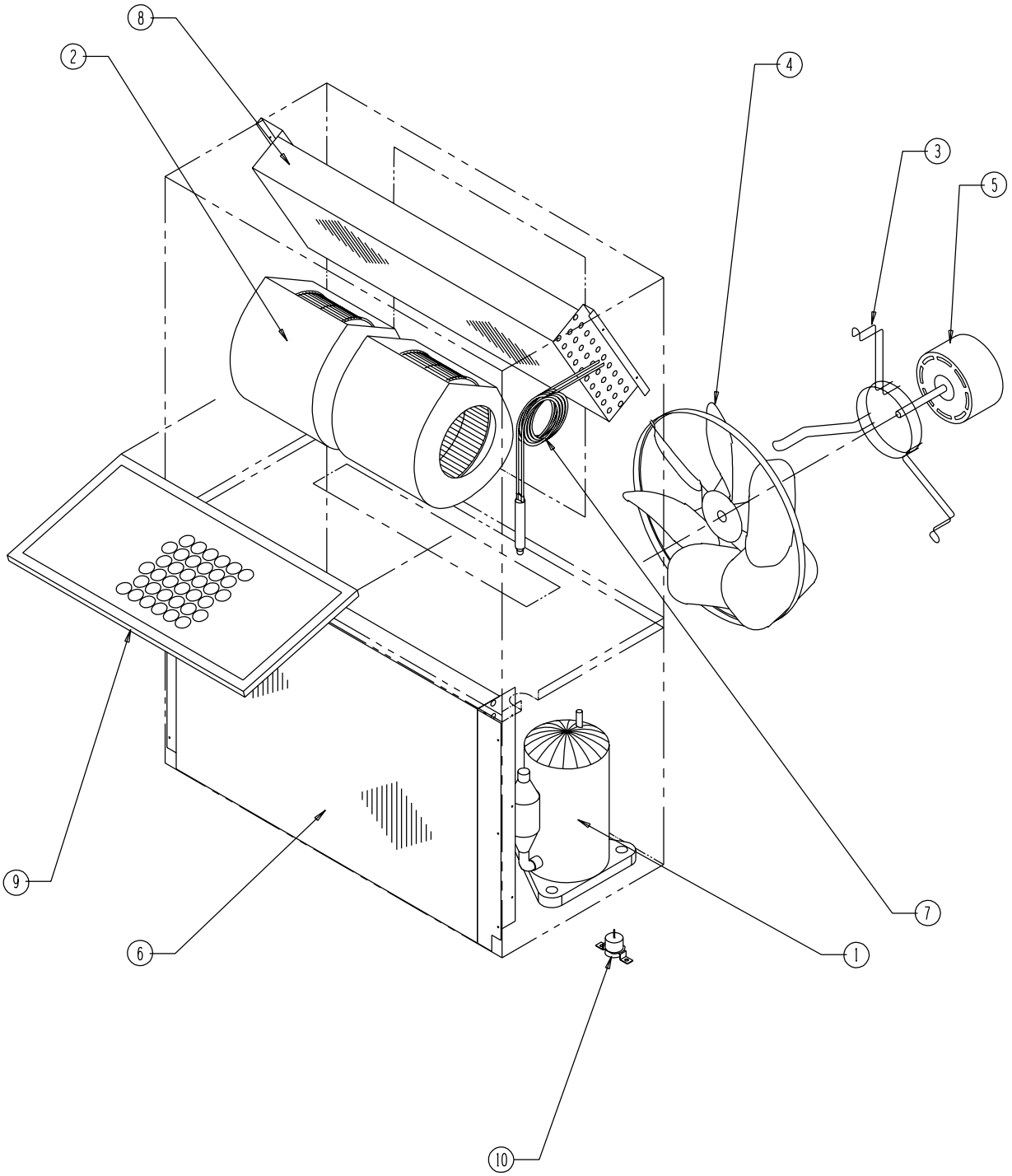

Drawing No.	Part No.	Description	W12A1-A	W12A1-K
1	8000-330	Compressor	X	
1	8000-331	Compressor		X
2	900-200	Blower Assembly 240V	X	
2	900-201	Blower Assembly 115V		X
3	8200-041	Fan Motor Mount	X	X
4	5151-047	Fan Blade	X	X
5	8101-007	Condenser Motor 240V	X	
5	8101-008	Condenser Motor 115V		X
6	5051-081BX	Condenser Coil	X	X
7	800-0373	Cooling Capillary Assembly	X	X
8	5060-074BX	Evaporator Coil	X	X
9	7003-021	Air Filter 1" Washable	X	X
9	7004-001	Air Filter 1" Throw Away	X	X
9	7004-028	Air Filter 2" Pleated ①	X	X
10	5651-110	Drain Valve	X	X
NS	1804-0327	High Pressure Switch Service Kit (Flare)	X	X
NS	1804-0386	Low Pressure Switch Service Kit (Flare)	X	X
NS	CMA-28	Low Ambient Control Service Kit (Flare) ①	X	X
NS	8402-169	Compressor Overload	X	
NS	8402-170	Compressor Overload		X
NS	5201-001	Filter Drier	X	X

NS – Not Shown

① – Optional on these models

CONTROL PANEL

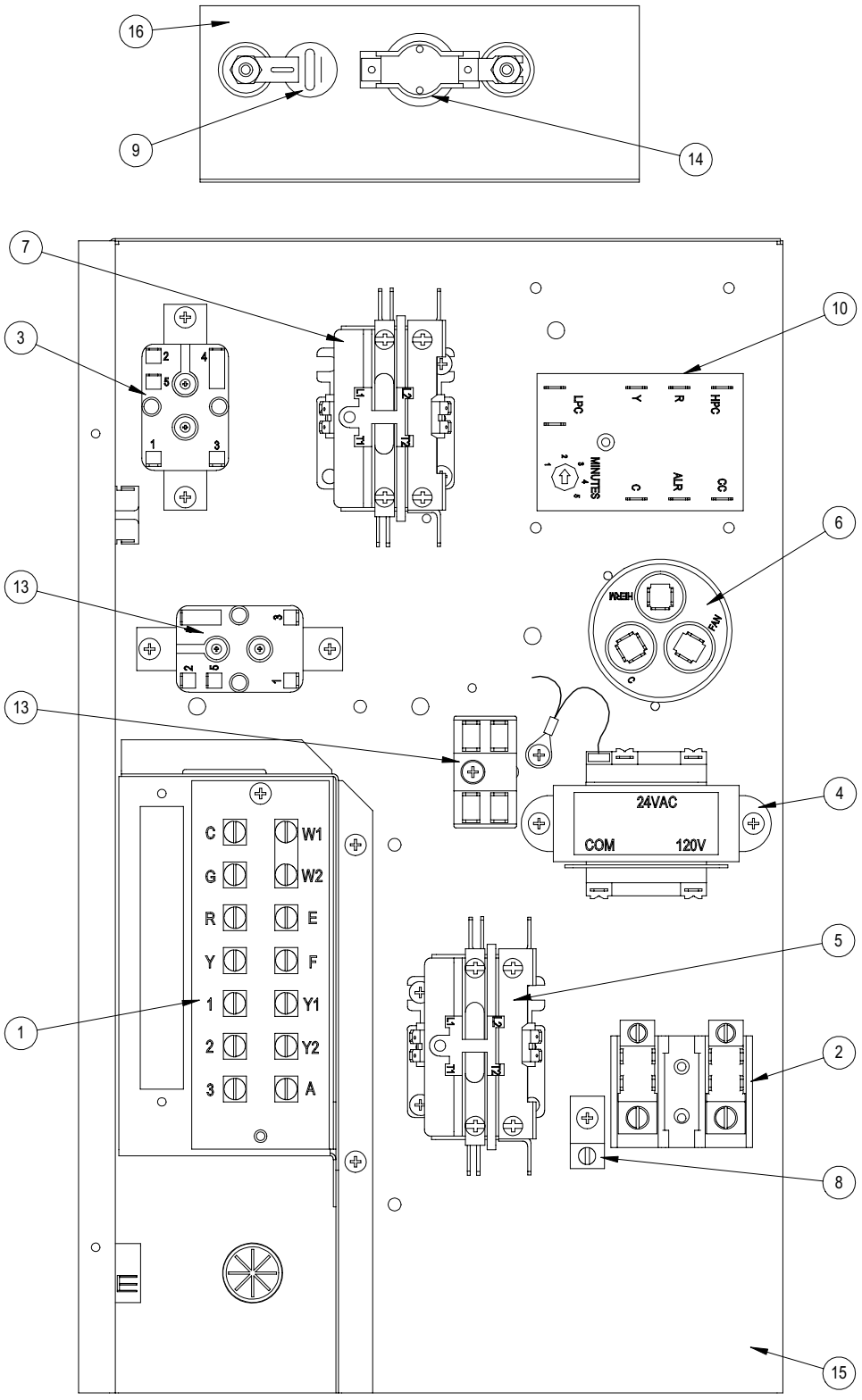

SEXP-524

Drawing No.	Part No.	Description	W12A1-A00	W12A1-A03	W12A1-A05	W12A1-K00	W12A1-K02
1	8607-024	Low Voltage Terminal Strip	X	X	X	X	X
2	8607-013	Terminal Block 2 Pole	X	X	X	X	X
3	8201-009	Blower Control Relay	X	X	X	X	X
4	8407-034	Transformer	X	X	X		
4	8407-039	Transformer				X	X
5	8401-007	Compressor Contactor	X	X	X	X	X
6	8552-090	Compressor Capacitor	X	X	X		
6	8552-048	Compressor Capacitor				X	X
7	8401-007	Heat Contactor		X	X		X
8	8611-006	Ground Terminal	X	X	X	X	X
9	8402-093	Thermal Cut Off		X	X		X
10	8201-088	Compressor Control Module	X	X	X	X	X
13	8201-062	Alarm Relay ①	X	X	X	X	X
13	8607-017	Terminal Block ① (Shown)	X	X	X	X	X
14	8402-084	Limit		X	X		X
15	117-154	Control Panel	X	X	X	X	X
16	8604-097	Heat Strip 3.6KW		X			
16	8604-098	Heat Strip 5.0KW			X		
16	8604-099	Heat Strip 2.2KW					X
NS	4095-146	Wiring Diagram		X	X		
NS	4095-147	Wiring Diagram	X				
NS	4095-148	Wiring Diagram				X	
NS	4095-149	Wiring Diagram					X

NS – Not Shown

① – Optional on these models

BLOWER ASSEMBLY

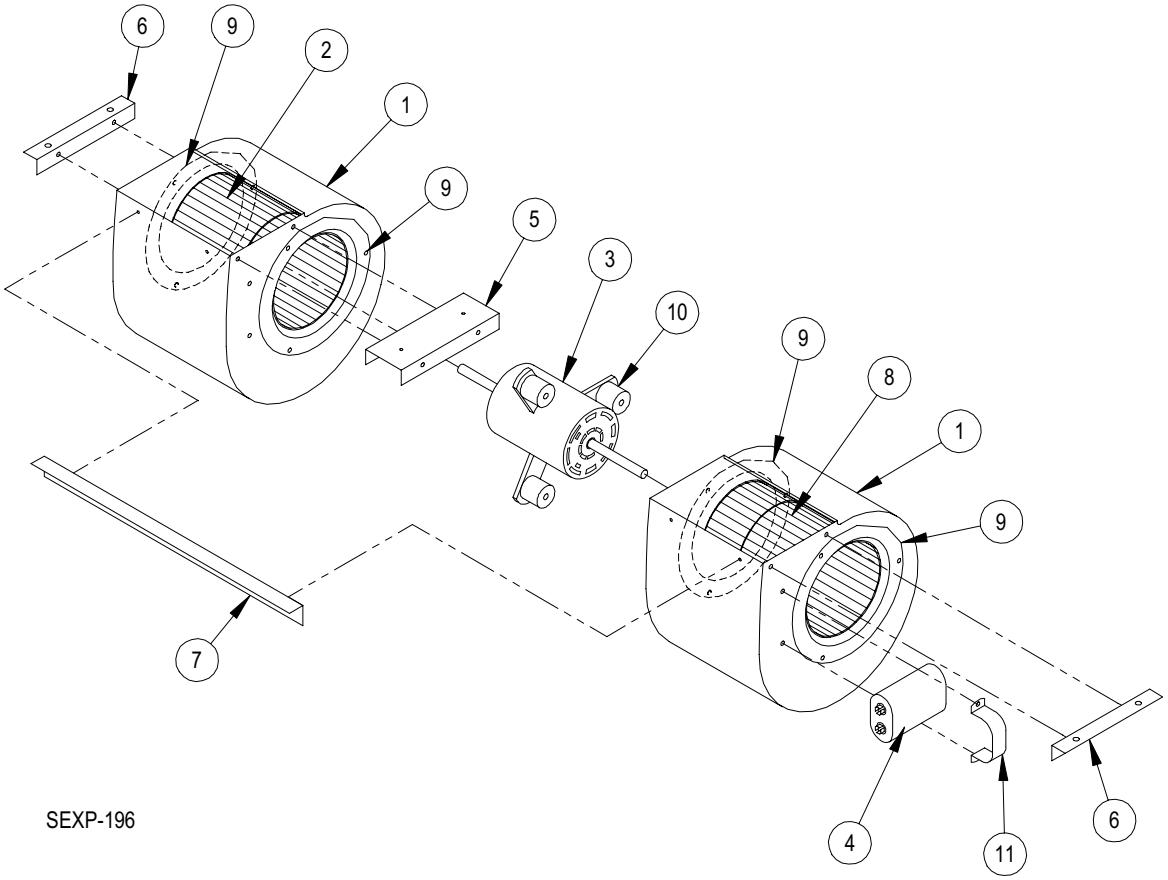

Drawing No.	Part No.	Description	900-200	900-201
1	151-114	Blower Housing *	X	X
2	5152-085	Wheel (CCW) Left	X	X
3	8101-009	Blower Motor (230/208)	X	
3	8101-010	Blower Motor (115)		X
4	8552-001	Capacitor 4MFD	X	
4	8552-002	Capacitor 5MFD		X
5	141-203	Center Blower Support	X	X
6	105-908	Side Angle	2	2
7	105-902	Front Brace	X	X
8	5152-084	Wheel (CW) Right	X	X
9	144-180	Inlet Ring	4	4
10	5451-018	Mounting Grommet	3	3
11	8550-003	Capacitor Bracket	4	4

* *Note: Replace with new rings.*

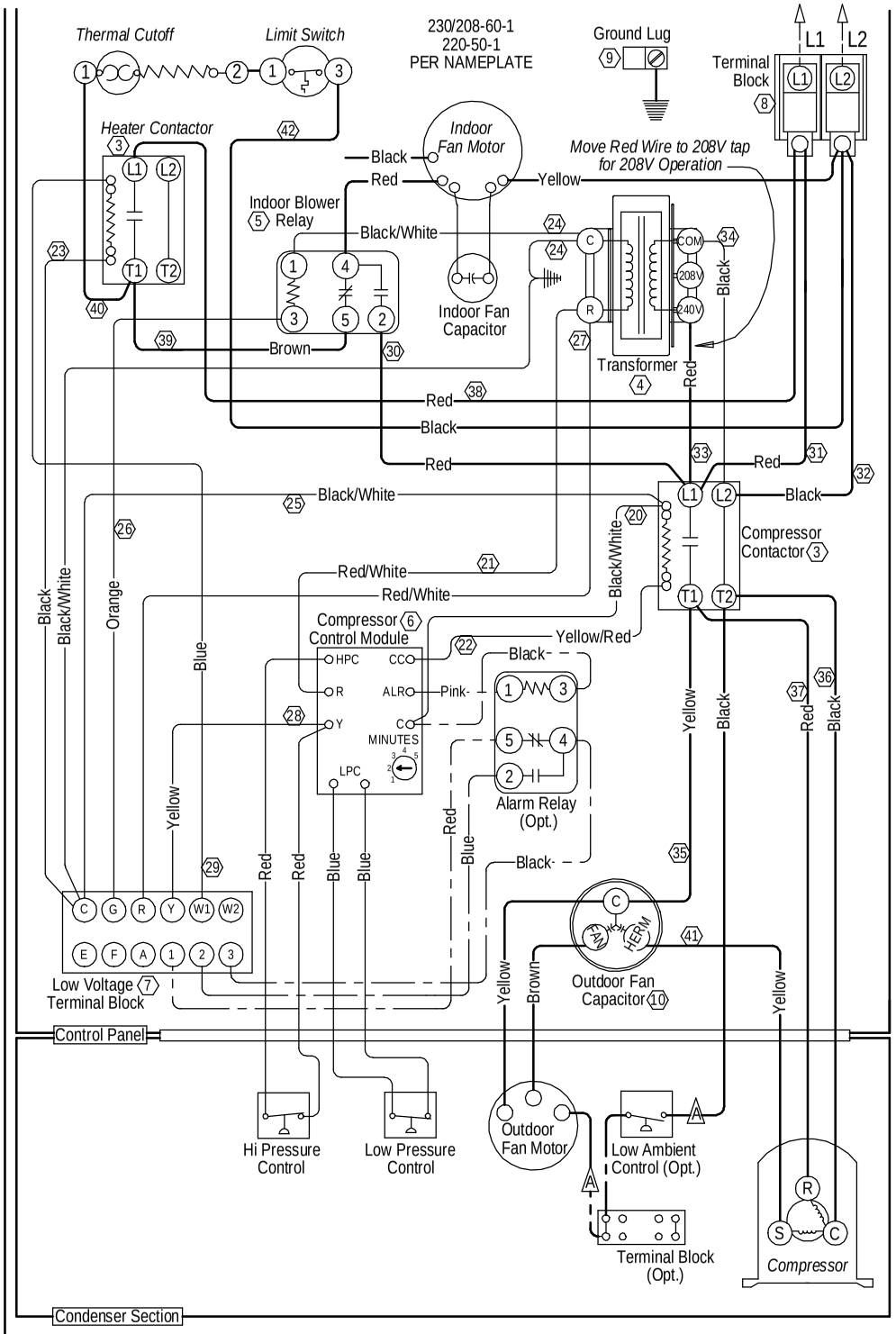

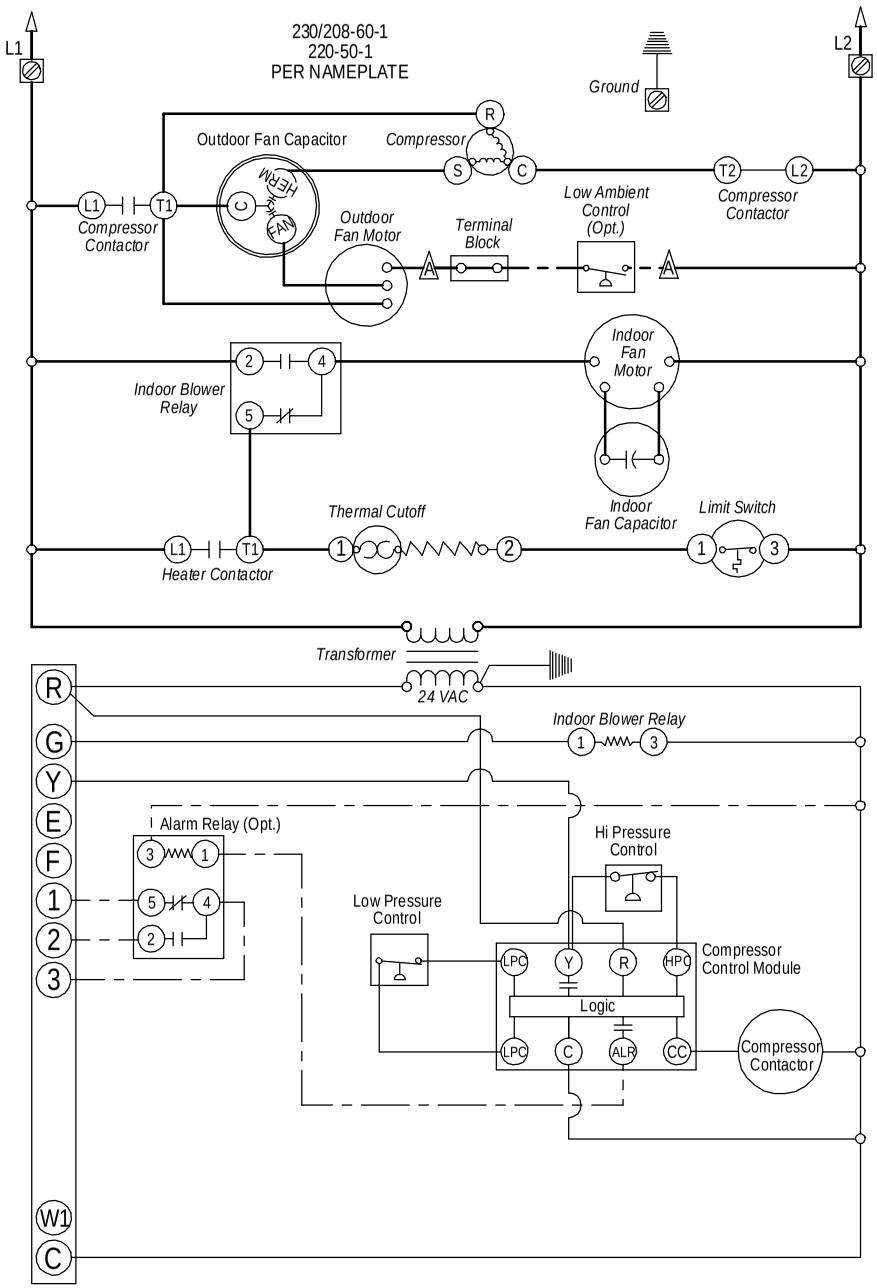

Wires Connect if Option Not Used	Factory	Field	Optional
High Voltage			
Low Voltage			

99 Wire Identification numbers for Bard use only.

WARNING
USE COPPER CONDUCTORS ONLY SUITABLE FOR AT LEAST 75° C.

DANGER
*ELECTRICAL SHOCK HAZARD
*DISCONNECT POWER BEFORE SERVICING.

Bard SINCE 1914
Bard Mfg. Co.
Bryan, Ohio

4095-146 A

INSTALLATION, OPERATION AND MAINTENANCE MANUAL

Cast Iron Multistage Centrifugal Blowers

CUSTOMER: PERENNIAL ENERGY

P.O. #: 231625

HSI ORDER #: WO31802

EQUIPMENT: (1) HSI 5108 GAS MULTISTAGE CENTRIFUGAL BLOWER

SERIAL #: (1) 0710768-31802

LOCATION: PERENNIAL ENERGY
1375 COUNTY ROAD 8690
WEST PLAINS, MO 65775

DET NORSKE VERITAS

MANAGEMENT SYSTEM CERTIFICATE

Certificate No. CERT-10967-2006-AQ-HOU-ANAB, Rev. 2

This is to certify that

Houston Service Industries Inc.

at

7901 Hansen Road, Houston, TX 77061 USA

has been found to conform to the Management System Standard:

ISO 9001:2008

This Certificate is valid for the following product or service ranges:

The Design, Manufacture, Repair And Re-Manufacture Of Multistage Centrifugal Blowers, High Speed Turbo Blowers And Related Accessories For Various Applications

Initial Certification date:
March 09, 2006

This Certificate is valid until:
March 27, 2012

The audit has been performed under the supervision of
Michael Polk
Lead Auditor

Place and date:
Houston, Texas, February 18, 2010

for the Accredited Unit:
DET NORSKE VERITAS
CERTIFICATION INC., HOUSTON TEXAS

Rudy Frueboes
Management Representative

Lack of fulfillment of conditions as set out in the Certification Agreement may render this Certificate invalid.

HEAD OFFICE: Det Norske Veritas Certification, Inc. 1400 Ravello Drive, Katy, Texas 77449. TEL: (281) 396-1000. FAX: (281) 396-1903

TABLE OF CONTENTS

Section	Contents
1.....	**Blower Pre-Startup Form** Return required prior to scheduling HSI technician for startup **Blower Startup Form** Return required within 7 days for warranty
2.....	**Multistage Centrifugal Blower** Specifications IO&M Manual
3.....	**Motor** Specifications IO&M Manual
4.....	**Accessories** Specifications IO&M Manual
5.....	**Test Reports** Blower Test Stand Report Blower Vibration Report Rotor Balance Report

SECTION 1

BLOWER PRE-STARTUP FORM

RETURN REQUIRED PRIOR TO SCHEDULING HSI TECHNICIAN FOR STARTUP

BLOWER STARTUP FORM

RETURN REQUIRED WITHIN 7 DAYS AFTER STARTUP FOR WARRANTY

BLOWER PRE-STARTUP FORM

(Separate Form Must Be Completed For Each Unit Installed)

COMPANY: _____ **LOCATION:** _____

CONTACT NAME: _____ **PHONE:** _____

EQUIPMENT INFORMATION

Unit #: _____ Make: _____ Model: _____
Order #: _____ Serial #: _____

1. INSTRUCTION MANUAL

a) Does equipment installer have correct manual? Y N

2. FOUNDATION

a) What type of foundation? _____
b) Is foundation level? Y N
c) Is blower installed on pads? Y N
d) Is blower bolted down? (Do not tighten hold down bolts) Y N
Additional Comments: _____

3. PIPING

a) Is piping properly installed? Y N
b) Are flexible connectors installed? Y N
Inlet / Discharge / Both
c) Is butterfly valve installed? Y N
Inlet / Discharge / Both
(i) Is valve shaft at right angles to blower shaft? Y N
(ii) Is valve free to open and close? Y N
d) Are blowers run in parallel? Y N
e) Is check valve installed on inlet? Y N
f) Is check valve installed on discharge? Y N
(i) Is direction of flow correct? Y N
(ii) Is valve stem oriented correctly? Y N
g) Is unit equipped with air filter? Y N
h) Is unit equipped with silencer? Y N

4. BLOWER

a) Has blower(s) been properly maintained during storage per O&M manual? Y N
If no, explain: _____
b) Is there and visible damage? Y N
If yes, explain: _____
c) Is blower(s) belt drive or direct Y N
d) does shaft rotate freely? Y N
*e) Have oil machines been filled to the proper level's with oil? Y N

(i) What type of oil was used? _____

f) Has blower(s) been aligned Y N

g) Have belts been properly tightened (on belt drives) Y N

5. ELECTRICAL / CONTROLS

a) Has blower been wired with proper voltage? Y N

b) Is the current transducer (C/T) installed and wired? Y N

b) Are all accessories mounted? Y N

c) Are all accessories wired and working? Y N

d) Are all controls wired and working? Y N

If no explain:_____

e) Has control panel been powered up Y N

f) Will blower(s) be run from remote location? Y N

If yes, will remote system be operational at time of start up? Y N

If no, will an alterative method be ready to run blowers? Y N

h) Bump Blower for rotation. Correct? Y N

Additional comments: _____

Authorization Signature

I confirm that this blower and related equipment are fully installed and ready for start-up by HSI personnel. Furthermore, I understand that any delays incurred as a result of incomplete or incorrect installation will result in additional charges per HSI's published field service rates.

Company: _____

Blower Serial #: _____

Customer Signature: _____

Print Name: _____ Date: _____

Important Notes:

- **Start-up will not be scheduled until this form is completed in full, signed and returned to the project engineering department.**
- **Standard time for availability of technician is 4 weeks after signed receipt of this form. Note that earlier dates may be available only if scheduling allows.**

* Grease machines do not require additional grease at startup unless authorized by HSI personnel.

BLOWER START-UP FORM

CUSTOMER: _____ **LOCATION:** _____

CONTACT NAME: _____ **PHONE #:** _____

1. EQUIPMENT INFORMATION

Unit #: _____ Make: _____ Model: _____

Order#: _____ Serial #: _____

2. INSTRUCTION MANUAL

Does customer have correct manual? Y N

3. FOUNDATION

a) Installation location Indoors Outdoors

Covered? Y N

b) What type of foundation?

c) Is foundation level? Y N

d) Installed on pads? None Cork Neoprene Other: _____

e) Is it bolted down? Y N

Additional Comments: _____

4. PIPING

a) Is piping properly supported? Y N

If no, explain: _____

b) Are flexible connectors installed?

Inlet: Y N Type: Sleeve Expansion Joint

Discharge: Y N Type: Sleeve Expansion Joint

c) Is butterfly valve installed? Y N

Inlet/Discharge/Both

(i) Is valve shaft at right angles to blower shaft? Y N

(ii) Is valve free to open and close Y N

(iii) Are locks working properly Y N

BLOWER START-UP FORM

d) Are multiple units run in parallel? Y N
e) Is check valve installed on inlet? Y N
(i) Is direction of flow correct? Y N
(ii) Is valve stem oriented correctly Y N
f) Is check valve installed on discharge? Y N
(i) Is direction of flow correct? Y N
(ii) Is valve stem oriented correctly Y N
g) Is unit equipped with an air filter? Y N
OEM _____ Model # _____
OD: _____ ID: _____ H:_____ Material: Paper / Felt / Wire

h) Is unit equipped with silencers?
Inlet? Y N
Type _____
Discharge? Y N
Type _____

Additional Comments: _____

5. <u>BLOWER</u>

a) Has blower been properly maintained during storage? Y N
If no, explain
b) Is there any visible damage? Y N
If yes, explain
c) Does shaft rotate freely? Y N
d) Is this belt drive or direct drive? Belt Direct
e) What type of belts/coupling used?
f) Is unit oil or grease lubricated? Oil Grease
f) If oil, is oiler level correct? Y N
g) If oil, type of oil used? _____
h) If oil, is oiler at least: full? Y N

Additional Comments: _____

BLOWER START-UP FORM

6. MOTOR

OEM: _____ TEFC/ODP_____ Frame: _____

HP: _____ RPM: _____ Voltage: _____ CT: _____

Code: _____ Class: _____ S/N: _____

a) Is motor wired for proper voltage? Y N

b) Is there adequate room for ventilation of motor? Y N

Additional Comments: _____

7. ALIGNMENT

a) Has alignment been checked? Y N

b) What type of alignment equipment was used? Dial Ind. Laser

c) Final alignment readings:

8. START-UP

a) Bump motor for rotation. Correct? Y N
(Reverse two of three motor leads to correct)

b) Close throttling butterfly valve. Open isolating butterfly valve. Start blower. Open throttling butterfly valve. Set to full load amps.
What is amperage? _____(Measured with amp probe)

c) Is blower operating in surge? Y N

d) Is blower overloaded? Y N

e) Do amp probe readings approximately match calibrated ammeter readings? Y N

f) Are blower/motor vibration levels acceptable? Y N

g) Record blower bearing temperatures every hour for three hours:

	INBOARD	OUTBOARD
HOUR 0	_____	_____
HOUR 1	_____	_____
HOUR 2	_____	_____
HOUR 3	_____	_____

BLOWER START-UP FORM

h) Any leaks? Oil? Grease? Y N
If yes, explain: _____

9. TRAINING

a) Have you reviewed blower and controls operation with customer? Y N
b) Have you explained surge and overload conditions? Y N
c) Have you instructed the customer in routine blower, motor and accessory maintenance? Y N

Additional Comments: _____

10. START-UP CERTIFICATION

Start-up completed by:

H.S.I. Technician: _____ Date: _____

Customer Signature: _____ Date: _____

Note: Copies of vibration data, alignment readings and temperature readings should be sent to HSI with this form within 5 days of start-up to ensure warranty coverage.

SECTION 2

MULTISTAGE CENTRIFUGAL BLOWER

SPECIFICATIONS

IO&M MANUAL

TABLE OF CONTENTS

I. INTRODUCTION 1

II. INSPECTION 2

III. HANDLING 3

IV. STORAGE -- SHORT TERM 4

V. STORAGE -- LONG TERM 4

VI. INSTALLATION
1. Location 5
2. Foundation 5
3. Positioning 5
4. Piping 6
5. Accessories 7

VII. ALIGNMENT
1. Direct Drive 10
2. Belt Drive 12

VIII. OPERATION
1. Pre-Start-up Checks 14
2. Operation 15
3. System Test 17
4. Bearing RTD & Vibration Sensor Installation 19

IX. BEARING LUBRICATION
1. Oil Lubrication 20
2. Grease Lubrication 23

X. MAINTENANCE 25

XI. DRIVE/MOTOR 26

XII. SERVICE
1. Bearing Removal and Replacement 27
2. Seal Removal and Replacement 28
3. Coupling Maintenance 29
4. V-Belt Maintenance 29
5. Parts for Replacement 30

XIII. TROUBLESHOOTING GUIDE 33

XIV. SPARE PARTS & ORDERING 35

APPENDIX A 36

APPENDIX B 37

APPENDIX C 38

WARRANTY 39

SECTION I - INTRODUCTION

Congratulations! You have purchased the finest cast iron multistage centrifugal blower on the market. Houston Service Industries (HSI) is an **ISO 9001: 2008** certified business and we are committed to continual product improvement and customer satisfaction.

Proper installation, operation and maintenance will assure the user years of trouble-free service. This manual is supplied to help you properly install, operate and maintain your HSI centrifugal blower. It is important that you follow these instructions for installation and maintenance of your blower for years of trouble free operation.

Some cast iron multistage centrifugal blowers are supplied with an operation and maintenance manual (separate from this publication) specific to a particular application or contract. That manual should be referred to for information about your particular machine's use and application.

Always refer to your specific model number and serial number which are stamped on the nameplate attached to the inlet head.

SECTION II – INSPECTION

Immediately upon receipt, thoroughly examine the equipment. Both motor and blower shafts should rotate freely. There should be no evidence of damage, cracked casings, bent tie rods or any other unusual observations. Check the packing list to verify that the shipment is complete, noting receipt of miscellaneous items in crates or boxes. If any damage has occurred, or any material is missing, make a note on the carrier's freight bill and make sure that the driver signs on the same receiving copy. Notify the delivering carrier at once and also inform HSI. Do not return the blower without first contacting HSI to receive a return authorization approval.

HSI is not responsible for damaged freight. It is the responsibility of the carrier. If shipments arrive damaged, it is the customer's or receiving party's responsibility to contact the carrier to submit a claim.

SECTION III - HANDLING

The unloading and handling of the cast iron multistage centrifugal blower is the user's responsibility and should be performed by personnel experienced in handling heavy machinery.

The complete assembly can be lifted with the lifting eyes provided (figure 1) or from beneath the steel base (figure 2). Slings should be located near the ends of the base as shown in figure 2. Bare machines can be lifted by wrapping straps around the inlet and outlet flanges using long bolts to guide the straps as shown in Figure 3. Never lift with the sling around the shaft as damage may occur to the machine. Spreader bars must be used when lifting (see figure 4) to prevent damage to equipment.

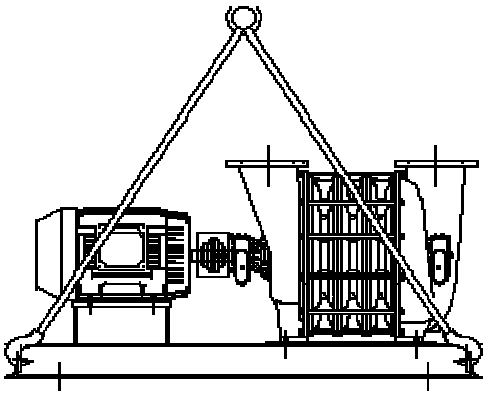

Figure 1.

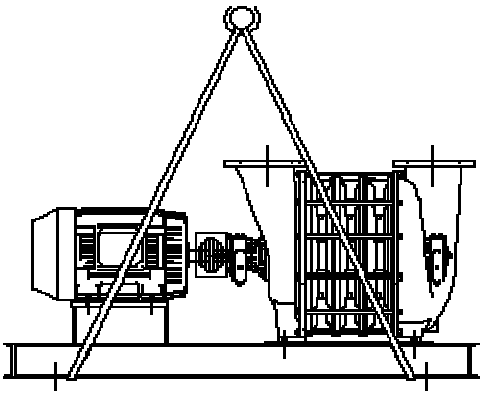

Figure 2.

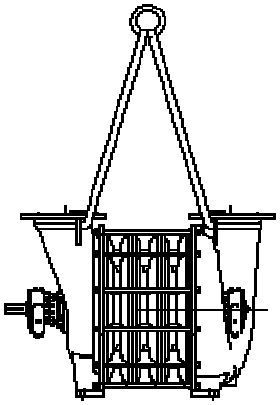

Figure 3.

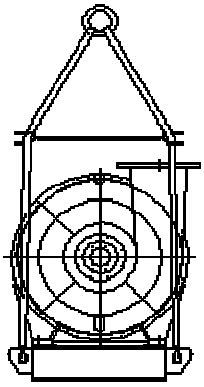

Figure 4.

Eye bolts are NOT supplied with the machine. If eye bolts must be used to lift the blower, HSI recommends the use of drop forged, weld-less shoulder pattern eye bolts, using full size flat washer and nut, screwed all the way down and properly seated.

CAUTION-- There is no such thing as a "safe" eye bolt. Eye bolts can fail due to mishandling, improper use, alteration, excessive heat or wear.
Always stand clear of the load when handling and lifting.

SECTION IV - STORAGE - SHORT TERM (UP TO 90 DAYS)

Your cast iron multistage centrifugal blower should be stored in a clean, dry, well ventilated area. Keep equipment covered (canvas preferred to plastic) and out of the elements. The storage area should be heated to prevent condensation. Rotate the blower and motor shaft at least once a week to prevent bearings from taking a set (getting a flat spot) and to keep lubrication evenly distributed in the bearings during idle periods. Be sure to keep a log of shaft rotations to insure machine warranty protection.

SECTION V - STORAGE - LONG TERM

Several precautions must be observed when storing equipment for longer than 90 days. Preparation for long term storage is done at the factory.

SEE APPENDIX B FOR DETAILED INFORMATION ON LONG TERM STORAGE

All grease lubricated machines are shipped with lubrication in the bearings. Oil lubricated machines are shipped without oil and do not require the oilers to be installed until the blower is ready for use. At this point, oil will need to be added.

Be sure to follow the motor manufacturer's instructions to properly maintain the motor during the storage period. Contact HSI factory personnel for any special instructions regarding your particular blower equipment.

SECTION VI - INSTALLATION

1. Location
   - The location selected should be clean, dry, properly drained and adequately ventilated.
   - Indoor locations are preferable.
   - Plan ahead. Ample room is required for maintenance, lubrication and the removal of the machine or driver for servicing.

2. Foundation
   The structural design of this unit and the smooth operation inherent in centrifugal machinery eliminates the need for massive foundations and costly site preparation. All that is required is a reinforced concrete floor or pad of sufficient strength to support the weight of the unit and insure long term stability. Avoid mezzanines or catwalks. Also avoid hollow floors.

3. Positioning
   Each unit is shipped with resilient mounting pads. Install two under each side of the base to prevent resonant vibration at the ends of the blower base. Depending on how many pads were shipped with your unit, the other pads should be placed under the parts of the base which carry the most weight i.e. blower and motor base feet (see figure 5 for a typical example). It is especially important to insure that the unit is perfectly level. Level in the lateral plane is especially important for oil lubricated machines. When shimming use shims (equal to or larger in size than the base pads) **under** the mounting pads as required to level the unit.

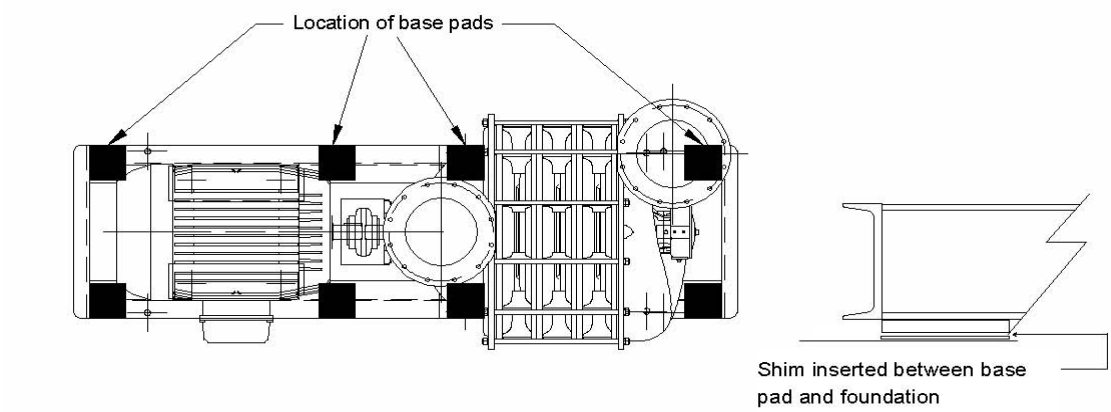

figure 4 figure 5

DO NOT BOLT DOWN!

Locating studs may be used to position the machine but should not be used to anchor the unit. Anchoring the unit or worse yet, grouting the base in concrete, greatly increases the support stiffness and may result in increased levels of vibration measured at the bearings. It is unnecessary, costly and may degrade mechanical performance. **Grouting machine in place may void warranty.**

HSI strongly discourages grouting of the unit

If grouting is required, you must consult manufacturer for instructions before installation.

4. Piping

Isolation sleeves must be used to isolate blower from piping system.

Expansion joints or flexible sleeves must be used on the inlet and outlet. Restraining rods are not normally recommended. If used, do not bolt up hard on both sides of the flanges as thermal movement will be restricted, causing elevated vibration levels. The piping must be aligned to ± ¼" offset maximum. Flange bolt holes must be matched to ¼" tolerance.

CAUTION: Connecting piping must not touch the blower. Use flexible connections (expansion joints or rubber sleeves) on both the inlet and outlet flanges to create an isolation gap between the two fixed flanges.

TABLE 1: Recommended Maximum Flange Forces

	INLET			OUTLET		
	PARALLEL TO SHAFT	VERTICAL TO SHAFT	HORIZONTAL 90° TO SHAFT	PARALLEL TO SHAFT	VERTICAL TO SHAFT	HORIZONTAL 90° TO SHAFT
SERIES	(F1) Lb/(kg)	(F2) Lb/(kg)	(F3) Lb/(kg)	(F1) Lb/(kg)	(F2) Lb/(kg)	(F3) Lb/(kg)
031	30/(14)	90/(41)	60/(27)	30/(14)	90/(41)	60/(27)
051	40/(18)	120/(54)	80/(36)	40/(18)	120/(54)	80/(36)
052	50/(23)	150/(68.0)	100/(45)	50/(23)	120/(54)	80/(36)
061	50/(23)	150/(68.0)	100/(45)	50/(23)	150/(68)	100/(45)
081	60/(27)	180/(82)	120/(54)	60/(27)	180/(82)	120/(54)
082	60/(27)	180/(82)	120/(54)	60/(27)	180/(82)	120/(54)
086	80/(36)	200/(91)	160/(73)	400/(181)	200/(91)	200/(91)
088	100/(45)	225/(102)	200/(91)	400/(181)	200/(91	200/(91)
126	180/(81.6)	250/(113.4)	250/(113.4)	150/(68.0)	170/(77.1)	250/(113.4)
141	200/(91)	600/(272)	400/(181)	200/(91)	450/(204)	300/(136)
186	300/(136)	800/(363)	525/(238)	250/(113)	550/(249)	375/(170
187	225/(102)	700/(318)	500/(227)	250/(113)	550/(249)	375/(150)
246	400/(181)	900/(408)	650/(295)	325/(147)	700/(318)	500/(227)

Recommended Maximum Flange Moments

	INLET			OUTLET		
	PARALLEL TO SHAFT	VERTICAL TO SHAFT	HORIZONTAL 90° TO SHAFT	PARALLEL TO SHAFT	VERTICAL TO SHAFT	HORIZONTAL 90° TO SHAFT
SERIES	(M1) Ft-lb/(Nm)	(M2) Ft-lb/(Nm)	(M3) Ft-lb/(Nm)	(M1) Ft-lb/(Nm)	(M2) Ft-lb/(Nm)	(M3) Ft-lb/(Nm)
031	100/(136)	50/(68)	50/(68)	100/(136)	50/(68)	50/(68)
051	200/(271)	100/(136)	100/(136)	200/(271)	100/(136)	100/(136)
052	300/(407)	150/(203)	150/(203)	200/(271)	100/(136)	100/(136)
061	300/(407)	150/(203)	150/(203)	200/(271)	100/(136)	100/(136)
081	400/(542)	200/(271)	200/(271)	400/(542)	200/(271)	200/(271)
082	400/(542)	200/(271)	200/(271)	400/(542)	200/(271)	200/(271)
086	400/(542	200/(271)	200/(271)	500/(678)	250/(339)	250/(339)
088	450/(610)	225/(305)	225/(305)	500/(678)	250/(339)	250/(339)
126	500/(678)	250/(339)	250/(339)	500/(678)	250/(339)	250/(339)
141	1200/(1627)	600/(813)	600/(813)	900/(1200)	450/(610)	450/(610)
186	1600/(2169)	800(1084)	800/(1084)	1200/(1626)	600/(813)	600/(813)
187	1500(2034)	750/(1017)	750/(1017	1100/(1491)	550/(746)	550/(746)
246	1800/(2440)	900(1220)	900(1220)	1400/(1898)	750/(1017	750/(1017)

Do not allow machine flanges to carry substantial unsupported weight. All Piping must be independently supported.

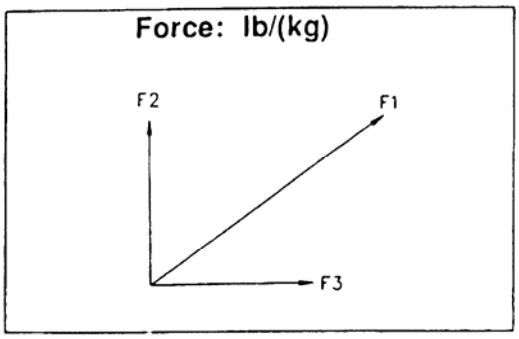

Figure 7

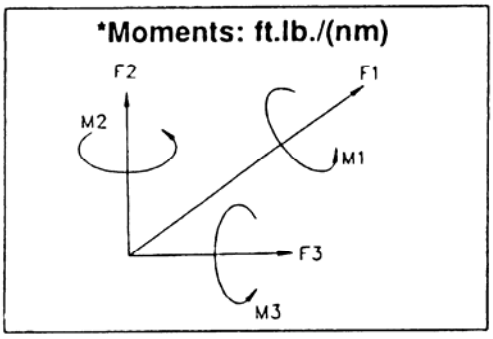

Figure 8

5. Accessories

Isolation Sleeves/Expansion Joints

These must be installed on the inlet and outlet piping systems to insure isolation of the piping systems from the blower flanges. The isolation or expansion joint must be installed upstream of the butterfly valve on the inlet side.

Butterfly or Throttle Valve

Butterfly valves are used to throttle the blower, or to isolate the blower while it is not running to avoid back pressure from entering the blower and damaging it.

Note: HSI recommends throttling your cast iron multistage centrifugal blower on the inlet side of the machine to maximize the efficiency of the unit/motor.

Carefully remove shipping flange covers prior to assembling accessories. Make sure no foreign materials enter the unit. When mounting the butterfly valve on the inlet, the valve should be positioned such that the valve shaft is at a right angle to the blower shaft and opens away from the body of the blower to allow smooth air entry to the blower (see figure 9). The rush of air should never be directed toward the first stage impeller.

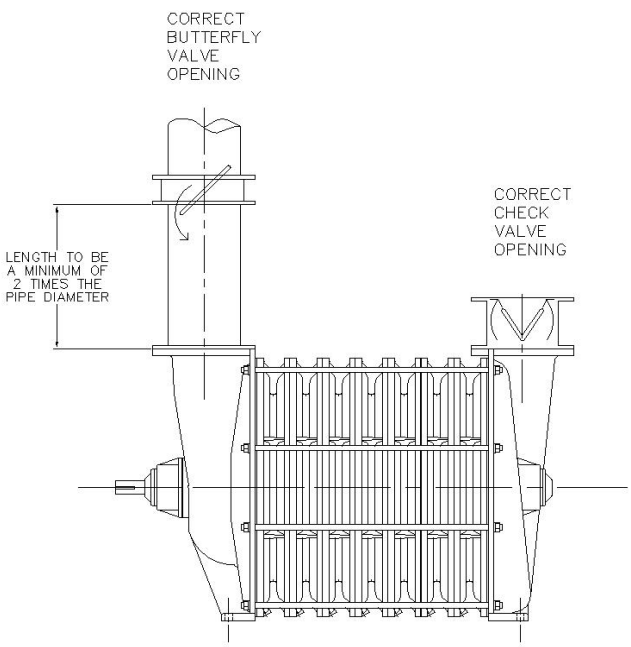

Figure 9

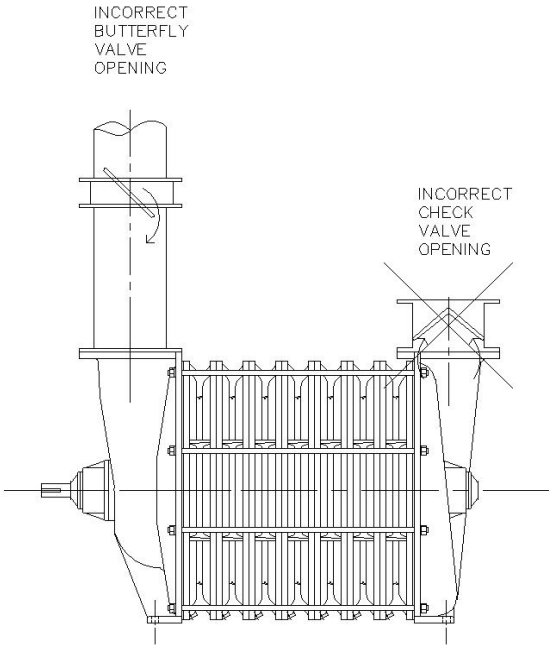

Figure 10

(Isolation sleeve/expansion joint omitted from figure. Unit must be properly isolated from piping system.)

Always start blower with inlet valve closed. Open slowly after machine comes up to speed.

Check Valves

A check valve must be installed in the discharge piping to prevent reverse air flow in the piping system.

Inlet Filter (Blowers)

HSI requires an inlet filter or filtration device to keep foreign material from entering the machine. Abrasive, wet or bulky material will damage the machine's internal parts and could cause catastrophic failure. Consult HSI for recommendations on inlet filter types and sizing. Refer to table 1 for weight restrictions on inlet flange.

It is extremely important to keep inlet filters clean. Dirty or plugged filters will cause a low flow or surge condition which will result in substantial damage to your machine. Units damaged from running in surge are NOT covered under warranty.

Bleed Air or Surge Control Systems

If you plan to operate the unit near its surge point, then some type of surge protection is required. Contact HSI for recommendations.

Drivers

- Electric - Read and comply with motor manufacturer's installation and operation instructions which are attached to the motor. Make sure that the motor nameplate requirements agree with the available power supply at job site. All wiring **MUST** be done by a licensed electrician in accordance with the National Electric Code and all local regulations.
- Turbine, Diesel, Gasoline, Natural Gas - Read and follow manufacturer's installation and operation manual supplied with driver.

Blowers are not final aligned from the factory.

1. Direct Drive
   Correct shaft alignment insures long life and trouble-free service for your centrifugal blower. Misalignment is one of the most common causes of machine vibration and premature bearing failure. Proper alignment means establishing, as near as possible, a common axis of rotation for both driver and driven shaft. **Final shaft alignment is the responsibility of the installer/owner. The maximum alignment tolerance at operating temperature is ± .003".**

   To achieve proper alignment at operating conditions, it is necessary to have a certain amount of **vertical** misalignment when the unit is cold. However, horizontally the blower should be in the specified tolerance.

   Alignment corrections must be made with the machine at operating conditions.

Centrifugal rotating equipment must have time to stabilize. This is the period of time required for the machine to reach operating conditions and temperature. This can take up to 1-2 hours. During this time, it is not unusual to experience higher than normal vibration levels while the machine is settling in and stabilizing; therefore, it may be necessary to disable vibration sensors during this period to avoid premature shutdown.

Alignment can be achieved using several methods:

Laser Alignment
This is the most accurate and quickest method of shaft alignment. HSI technicians are specially trained to provide any type of alignment service.

Reverse Dial Indicator Method
Another accurate form of alignment, this method is commonly used to achieve alignment. The reverse indicator method involves the use of two indicators, as shown in figure 11.

Figure 11

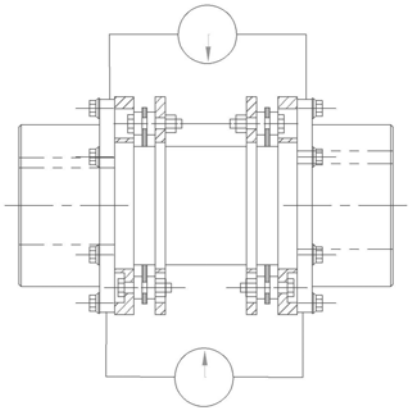

Single Dial Indicator Method
This method is used to measure parallel and angular misalignment.

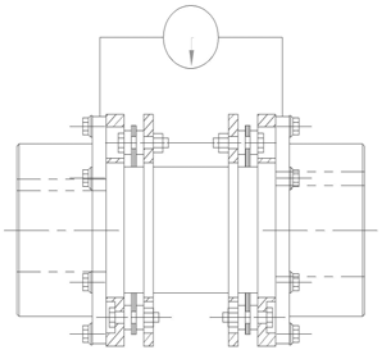

Figure 12

Caliper and Straight Edge Method
This is not recommended for final alignment.

After stabilization (when temperature rise has ceased), final alignment corrections should be made.

HSI recommended alignment tolerance is ± .003 inches (.0508mm) parallel and ¼° angular.

The following conditions can affect alignment and can be a factor in trying to achieve good alignment:

- Base and foundation must be level and smooth.
- Piping must be isolated using flexible sleeves or expansion joints.
- Pay particular care to outlet driven machines with horizontal discharge heads as thermal expansion can be multi-directional.
- Machine structural base should be mounted on resilient vibration pads, as supplied, and should not be hard grouted (see section VI-3). Anchor bolts should be tightened by hand only.
- Check for soft foot. All driver (motor) support feet must be in the same plane. When one or more feet are higher than the others, a “soft foot” condition (table-leg effect) exists that must be corrected to allow for a more exact alignment.

To check for soft foot:
With all motor hold down bolts tight, place dial indicator at tip surface of foot and set at zero. Loosen that foot, noting the indicator movement. Tighten that foot. Perform same procedure on the adjacent foot. Add shims to the foot showing the highest reading.

When the reading is brought to a value of less than .003 inches (0.076mm), check the first foot checked to ascertain that a new soft foot has not been created. An acceptable reading would be less than .003 in (0.076mm). For more common causes of soft foot, see Appendix A.

Good alignment is critical to long bearing life. Lack of vibration at start up does not necessarily indicate good alignment.

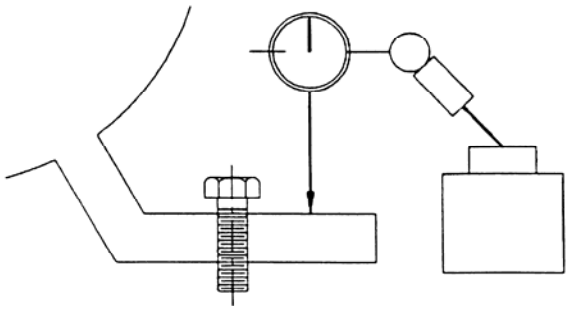

Figure 13

IMPORTANT: Always lock out starter or motor control center when working on or near any rotating equipment.

2. Belt Drive Alignment

   Prior to alignment of belt driven systems, inspect piping system and installation to be sure it is in accordance with HSI recommended specifications. Sheaves and belts must be clean and dry. Do not apply belt dressing.

   Alignment is checked by placing a straight edge across the faces of both sheaves. If properly aligned (figure 14), the straight edge will contact both sheave faces squarely. Incorrect alignment (figures 15 & 16) can be adjusted by moving the motor into proper position.

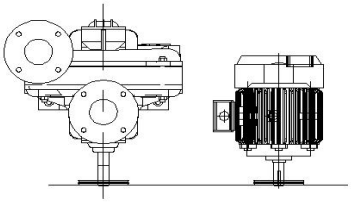

Figure 14
Proper Alignment

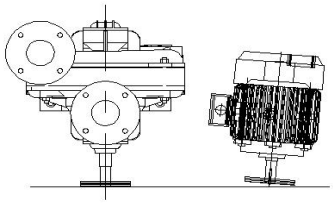

Figure 15
Angular

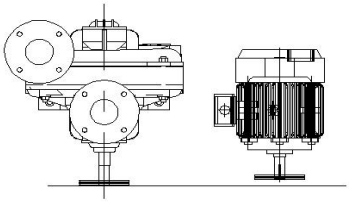

Figure 16
Parallel

Proper belt tension is important to insure maximum belt and bearing life. Follow the instructions supplied with the tension meter to determine the proper belt tension. Belts may stretch slightly when first placed into service; therefore, recheck belt tension after the machine has been operated for a few hours.

When replacing V-belts, always replace with matching belts of the same type from the same manufacturer. Never mix new and used belts on a drive. Never force belts over the sheave. Remove tension from belts when out of service for lengthy periods.

Belt tension

Belt tension can be checked by dividing the unsupported belt length in inches by 64 to arrive at a deflection dimension. The belts should have approximately 5-7 lbs. tension at this deflection. Belt manufacturers provide a tool to check this (see Figure 17 below). If special belts are used, the manufacturer's recommendations should be followed.

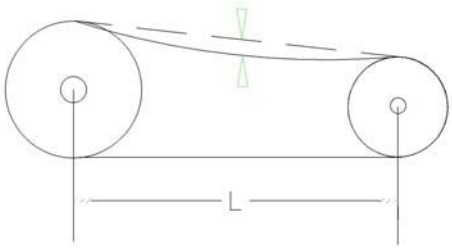

Figure 17

When belts are tensioned properly a short duration squeal on start-up may be heard.

1. Pre-startup Checks

Visible Damage (see Section II)
Check for any evidence of shipping and/or installation damages, such as cracked castings, scrapes, bent tie rods, etc.

Verify Proper Installation (see Section VI)
Insure vibration pads installed, sufficient foundation, no grout, not bolted down, piping correctly installed and isolated from unit, inlet filters installed, all blind flanges removed. **Be sure all motor and blower hold-down bolts have been tightened securely.**

Coupling Alignment (see Section VII)
Alignment of the motor/machine must always be checked prior to initial startup.

Belt Alignment (see Section VII)
Always realign sheaves and re-tension belts prior to initial startup. Be sure belts are clean and dry. Recheck belt tension after the first couple of hours of operation.

Lubrication (see Section IX)
Coupling must be lubricated per manufacturer's recommendations if lube type coupling is used. Motor bearings are to be lubricated per manufacturer's recommendations. Insure that blower bearings on grease lubricated machines have been sufficiently lubricated for approximately 2,200 hours of normal operation. Verify no water condensation has collected in the bearing housing by removing the housing cover and inspecting for moisture inside. If water is present, HSI recommends replacing the bearings to insure warranty coverage in the event of bearing failure.

Bearings of oil lubricated machines will require the addition of recommended oil to the oiler bottles, since the blowers are shipped without oil. The oil level adjuster has been preset at the factory, but should be checked prior to start-up.

Safety Guards
Coupling (or belt on belt drive) and motor fan guards should always be in place and tightened securely during operation. Do not operate machine with motor junction box open or any other electrical safeguard not in place. Make sure all starters or motor control centers are locked out.

Electrical Connections

Motor must be wired per nameplate and the control panel connected per electrical drawing. All accessories, such as valves, actuators, temperature sensors, etc. must be correctly wired per manufacturer's instructions.

Check current transformer for correct number of turns of motor lead through the "doughnut" for the ammeter and meter relay, if supplied. Consult factory if information is not readily available.

Initial Startup Checklist

- Have you cleared with Operations Personnel?
- Is any downstream maintenance being performed?
- Does shaft spin free by hand?
- Are all coupling guards and safety devices in place?
- Are diffuser valves open, if applicable?
- Is outlet butterfly valve open?
- Is inlet butterfly valve closed?
- Is piping system ready for flow of air or gas?
- Are atmospheric bypass valves open, if present?
- Energize control panel.
- Momentarily "bump" motor to verify proper rotation as indicated by arrow cast into inlet head.

2. Operation

Press start button. Unit should reach full motor RPM in approximately 10-15 seconds. If it does not, de-energize control panel and investigate.

Motor starting amperage draw will momentarily "peg" ammeter (if supplied).

- When full motor RPM is reached and amperage draw decreases, slowly open inlet butterfly valve to achieve desired air flow (or amps).
- Allow machine to reach its operating temperature (see next page) and then readjust flow rates as they may have decreased due to temperature variations.
- Adjust bypass valves (if present).
- Monitor vibration and temperature levels at the bearing housing and note any drastic or constant increases.

Shutdown (Normal and Emergency)

- Press Stop Button
- Open bypass valves (if present)
- In the event of an electrical malfunction, during an emergency shutdown, de-energizing the control panel is recommended.

It is normal to hear "clacking" of the check valve during coast down.

Operating Temperatures

It is the nature of centrifugal compressors to run hot due to heat of compression and internal friction caused by movement of air. The higher temperatures will be

on the discharge side of the machine. The following information will serve as a guide in determining acceptable temperature limitations under normal operating conditions. For specific applications, or operating temperatures in excess of those shown below, contact the factory.

Bearing Temperatures

Bearings used in your centrifugal blower are designed to operate continuously at temperatures in excess of 200°F (93°C), measured on the bearing housing. Standard alarm circuitry, if supplied, is set to alarm at 220°F (104°C). If bearing temperature monitors are not supplied, check bearing housing temperatures periodically, and notify HSI if readings exceed 220°F (104°C).

Discharge Air Temperature

Under normal operating conditions, using ambient or atmospheric air, typical discharge air temperatures will also exceed 200°F (93°C) measured in the discharge air stream or on the surface of the discharge (outlet) head. Use only discharge pipe rated for high temperature (300°F).

Discharge temperature is affected by many factors including efficiency, flow, pressure, altitude, inlet temperature, etc. so it is difficult to determine the exact discharge temperature to expect.

Generally speaking, the discharge air temperature should not exceed 275°F (135°C) under normal operating conditions.

In all cases where other than ambient or atmospheric air is being compressed, or discharge temperatures reach 275°F (135°C), consult HSI. Failure to do so could nullify factory warranty.

NOTE: The current acceptable decibel limit mandated by OSHA is 85dBA. Every effort has been made to keep the noise level of operating equipment below this level. Hearing protection is not required by law; however its use is recommended when operating this equipment.

CAUTION: In hot applications such as steam re-compression, or where inlet temperatures exceed 200°F (93.3°C), the machine must be preheated slowly to a minimum temperature of 180°F (82.2°C) prior to introduction of hot process air, gas or vapor. Sudden introduction of above without preheating can cause serious damage to the machine and will void the factory warranty.

3. System Test

Surge Control Test

- Bring machine up to operating speed.
- Set trip point slightly above surge point on meter face. Different types of motors and controls require different set up procedures - consult factory for specifications.

Surge is defined as the “unstable” flow of air through a machine. It can only be caused by a lack of air into, or a restriction of air out of, a blower or exhauster. Surge is harmful to centrifugal machines because the heat of compression within the blower is not allowed to be carried off, resulting in the aluminum impellers expanding to touch the inside walls of the cast iron housing. The heavy pulsating action of a unit in surge will inevitably cause the bearings and machine to fail. In some cases where heavy surge is experienced, a centrifugal machine can fail within a matter of minutes (see Appendix C for more on surge).

Amperage Test

- Meter must be checked for correct amperage reading. Compare actual amperage draw of the motor with that registered on the meter.
- With machine in full operation, use a “clamp-on” ammeter to measure actual amperage draw at motor or motor starter. This amount should be reasonably close to that registered on the meter (within 5%). If amperage draw is not close to that measured or the meter, check to see that ratio stamped on current transformer matches that imprinted on the back of the meter, or check for the correct number of turns through the current transformer.

Overload Protection Test

On units with motor overload protection, a high amps trip point is on the meter face. This adjustment varies with the type of meter used; consult factory for details. With machine in full operation, adjust the meter, decreasing the set point until it crosses the meter reading. The overload alarm will sound and/or shutdown will occur. Be sure all horns, lights, etc. respond properly to the overload condition.

Bearing Temperature Monitors

All thermal-guard systems are calibrated and preset at the factory to trip at approximately 220°F (110°). This high limit bearing temperature set point is sufficient for all equipment and must not be adjusted.

Be sure capillary tubes are secured properly and switch gauges are installed correctly. The red needle is only a follower to indicate the maximum temperature that the bearing has previously reached. Set the needle to its lowest point for initial start-up. Accuracy of the temperature monitor can be checked by immersing in oil heated to at least 230°F.

Vibration Monitor System

Vibration sensors must be installed securely to the blower with all wires shielded and secured according to manufacturer's recommendations.

Verify the alarm and insure trip set points are set in accordance with manufacturer's recommendations. HSI recommends minimum settings of 0.45 in/sec maximum velocity for alarm and 0.55 in/sec maximum velocity for shutdown. Test of vibration protection system varies with each manufacturer; therefore, consult manufacturer's installation manual for correct procedure for verifying proper operation.

Bearing RTD and Vibration Sensor Installation:

HSI standard bearing housings have 2 or 3 holes drilled to ½" NPS to install protective instrumentation devices. HSI recommends using the hole drilled closest to the horizontal position for the vibration sensor while the RTD can be installed in any of the remaining holes as shown below.

- Removing hex plugs: The HSI standard bearing housings has a hex plug installed on the ½" connections that is easily removable by using an Allen wrench. After removing the plugs ensure there is no debris or dirt inside the hole.

- Installing Sensors: Apply Teflon tape to the threads of the sensor being installed and tighten the sensor in place. Ensure that the sensors have a snug fit by using a wrench to ensure they are installed properly.

NOTE: HSI's standard RTD is spring loaded and is designed to press against the bearing race. Please make sure the sensor you are using is either spring loaded or has an extension length no longer than .82".

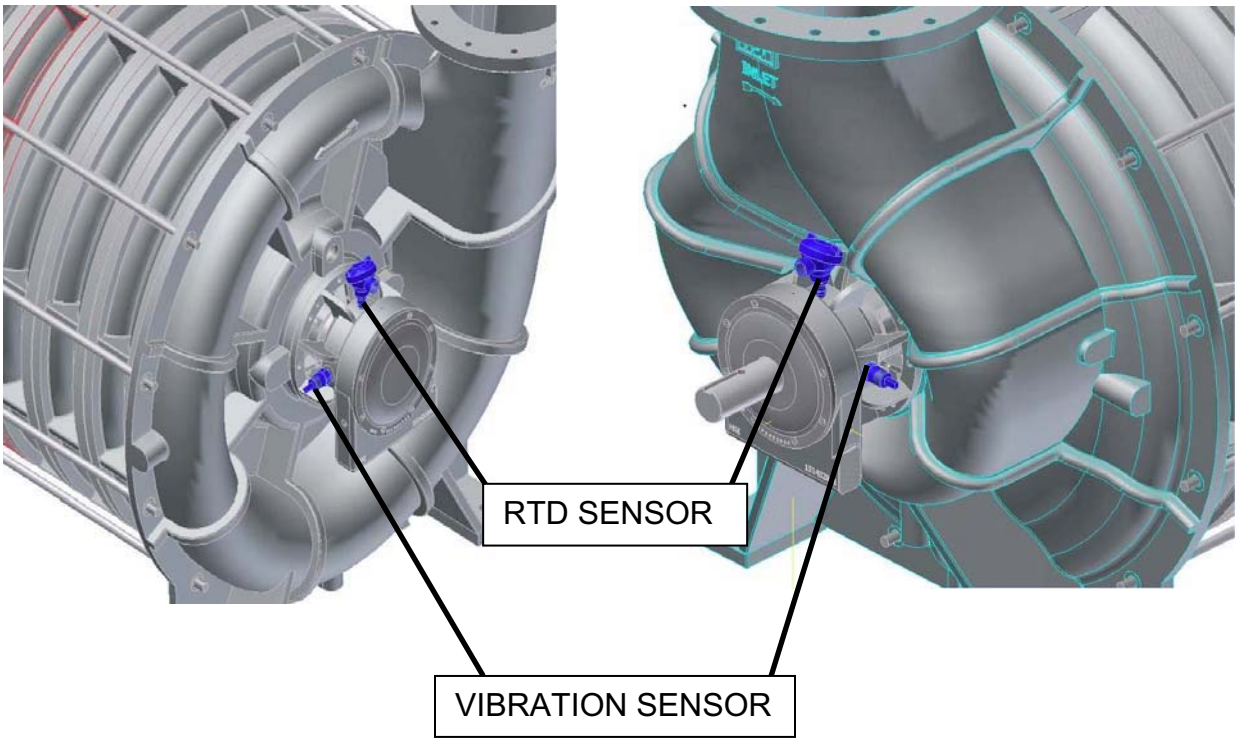

Blower Non-Drive End Bearing Housing

Blower Drive End Bearing Housing

SECTION IX - BEARING LUBRICATION

Proper maintenance and lubrication are of extreme importance to insure long, reliable service from your machine. HSI centrifugal blowers are lubricated using grease or oil. The most common causes of overheating, noise and premature bearing failure are over or under lubricating, use of the wrong type of lubricant, or use of contaminated lubricant.

1. Oil Lubrication
   HSI cast iron multistage centrifugal blowers are typically supplied with either Trico or Oil-Rite oilers. HSI standard oil is required in all oil-lubricated machines. **Use of any other oil without approval from the HSI Service Department will automatically VOID the machine warranty.**

HSI Standard Oil Specifications

	Petroleum Base PO-100	**Synthetic SO-100**	**Synthetic - Food Grade FO-100**
Change Interval (hours of operation)	4000	OEM Recommendation	OEM Recommendation
Viscosity at 40°C	100	100.9	90 - 110 cSt
Viscosity at 100°C	11.4	13.7	
Viscosity at 100°F	112	112	468 - 583 SUS
Viscosity at 210°F	11.8	14.1	
Pour Point °F/°C	10/-12	-49/-45	15°F Max.
Flash Point °F/°C	450/232	500/260	450°F Min.
Temperature Range °F/°C	-5 to 350/-20 to 177	-5 to 350/-20 to 177	-5 to 350/-20 to 177
Other	Anti-Foam Agents	Excellent Flow Properties	USDA H-1
	Demulsifiers to separate water	Resists High Temperatures	Antioxidant
	Improved thermally stable zinc additives	Shear Stable	EP/AW agent
		Anti-foam	Defoamer
		Rapidly separates from water	If stored correctly, unlimited shelf life
		Ashless, no zinc, anti-wear formula	
		Non-corrosive to yellow metals	
	HSI Part Number	HSI Part Number	HSI Part Number
1 Quart	22100111	22100211	22100311
Case (12 Quarts)	22100112	22100212	22100312
1 Gallon	22100113	22100213	22100313
Case (6 Gallons)	22100114	22100214	22100314
55 Gallon Drum	22100115	22100215	22100315

Prior to shipment, the oil reservoirs are emptied. They **MUST** be refilled prior to start-up.

To check Trico Oiler oil levels:

- Be sure oiler base is perfectly level and the oiler bottle is positioned correctly on the oiler base.
- The distance between the edge of the oiler bottle collar and a theoretical line drawn through the center of the ribs on the oil reservoir cap is measured by placing a straight edge horizontally along bottom edge of oil bottle collar and measuring up to approximately center of rib (see figure 18).

Figure 18

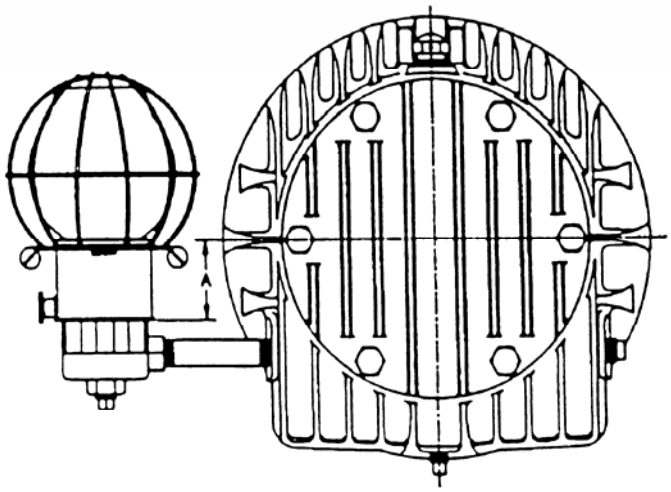

Model/Series	Dimension "A"
051, 052	1 ⅝" (41mm)
061, 081, 082	1 $^{15}/_{16}$"(49mm)
086, 088	2 ¼" (57mm)
126	2 ½" (63.5mm)
141	2 ⅝" (67mm)
186	4 $^{5}/_{16}$" (109.5mm)

The level of oil in the glass oiler bottle is NOT an indication of oil level in the reservoir. It indicates only that there is an adequate supply of oil for the bearing reservoir.

If adjustment is required, proceed as follows:

- Remove oiler bottle and lift out the micrometer leveling rod located loose inside the oiler base.
- Adjust the wing type leveling nut (upper) up or down as necessary. Lock in place with locking nut (lower).
- Replace micrometer leveling rod inside oiler base.
- Drain at least 1 cup of oil out of reservoir.

- Fill oiler bottle with approved oil and invert into oiler base (a quick motion will minimize spillage). Lock in place with thumb screw on oiler bottle collar.

Whenever refilling system with oil, NEVER pour oil directly into oiler base. Always fill oiler bottle and invert onto oiler base. Never interchange micrometer leveling rods.

FILLING INSTRUCTIONS

TRICO OILER

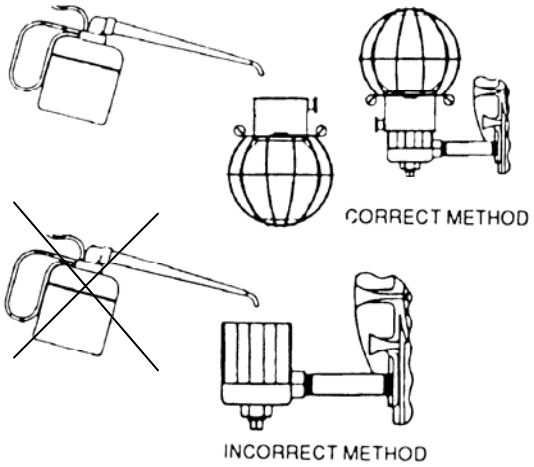

Figure 19

OIL-RITE OILER

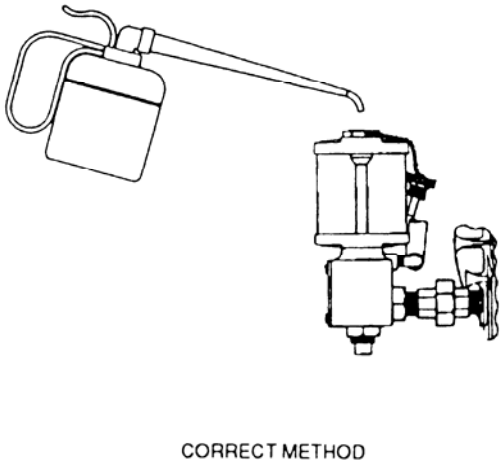

Figure 20

To check Oil-Rite Oiler Levels:

Oil-Rite oilers are provided with a sight glass in the oiler base. The sight glass has a “full” mark etched horizontally. Regardless of the oil level in the glass reservoir, the sight glass full mark is the indication of the correct oil level. The Oil-Rite oilers are factory preset; no field setting is needed.

CAUTION: For Oil-Rite Oilers, the vent hose must be connected between the oiler base and the top of the machine bearing housing.

To add oil to the bearing housing, remove the screw cap attached to the top of the Oil-Rite oiler. Fill bottle with oil. Replace screw top until it is snug against the top of the oiler. This will permit the oil to flow into the bearing housing.

A bubbling action will take place as long as the bearing requires oil. Repeat the filling of the Oil-Rite oiler bottle until this bubbling action stops. When the bubbles stop, it is an indication that the bearing housing has the proper amount of oil.

Add oil as often as needed. Once every year of normal operation, drain oil completely and refill with clean fresh oil. During the re-lubrication process, it is of critical importance to protect both the lubricant and the bearing from contamination by dust, dirt, or any foreign materials. Each oil reservoir has a magnetic drain plug. Check plug periodically for any material that may be present. If metal shavings or particles are observed, consult HSI.

2. Grease Lubrication

   The major cause of bearing failure is over greasing rather than under greasing. For this reason, HSI does not recommend use of permanently installed grease fittings as they invite over greasing.

   HSI standard grease is required in grease-lubricated machines. **Use of any other type of grease without approval from HSI Service Department will automatically VOID THE MACHINERY WARRANTY.**

HSI Standard Grease Specifications

	Petroleum Base	**Synthetic**
	PG-100	**SG-100**
Change Interval (hours of operation)	Dependent on conditions/application	Dependent on conditions/application
Viscosity at 40°C	140 - 180cSt	90 - 120 cSt
Viscosity at 100°C	13.5 - 16.5 cSt	12 - 17 cSt
Viscosity at 100°F	735 - 950 SUS	580 620 SUS
Viscosity at 210°F	73.5 - 86 SUS	65 - 75 SUS
Pour Point °F/°C	N/A	N/A
Flash Point °F/°C	450/218	450/218
Temperature Range °F/°C	-58 to 350/-50 to 177	-58 to 350/-50 to 177
Color	Red	Purple
Grade	NLGI Grade 2	NLGI Grade 2
	HSI Part Number	HSI Part Number
14 oz Tube	22100121	22100221
Case (10 Tubes)	22100122	22100222

Prior to shipment, blower/exhauster bearings are adequately lubricated for 2,200 hours of operation under normal operating conditions. If three months or more have elapsed since shipment from the factory, remove bearing housing covers and inspect for moisture due to condensation.

Re-greasing Procedure

Recommended bi-annually during normal operation or more frequently under abnormal operation conditions such as high speed operation, dirty environment, high pressure and temperature.

Drive End.

- Allow machine to come to a full stop and lock out (as required).
- Unfasten bearing cap bolts
- Remove old grease from cap
- Move cap towards the coupling to facilitate access to the bearing.
- Inject clean grease into grease "zerk" fitting in the bearing housing while slowly turning the shaft by hand. This will force the old grease through the bearing. Continue to remove the old grease until clean grease has replaced it.
- Hand pack bottom of both caps 1/4 with clean grease, (flush with the edges of the cap, refer to Figure 21).
- Replace and fasten the bearing cap.

Non-Drive End.

- Unfasten bearing cap bolts
- Remove old grease from cap
- Inject clean grease into grease "zerk" fitting in the bearing housing while slowly turning the shaft by hand. This will force the old grease through the bearing. Continue to remove the old grease until clean grease has replaced it.
- Hand pack bottom of both caps 1/4 with clean grease, (flush with the edges of the cap; refer to Figure 21).
- Replace and fasten the bearing cap.

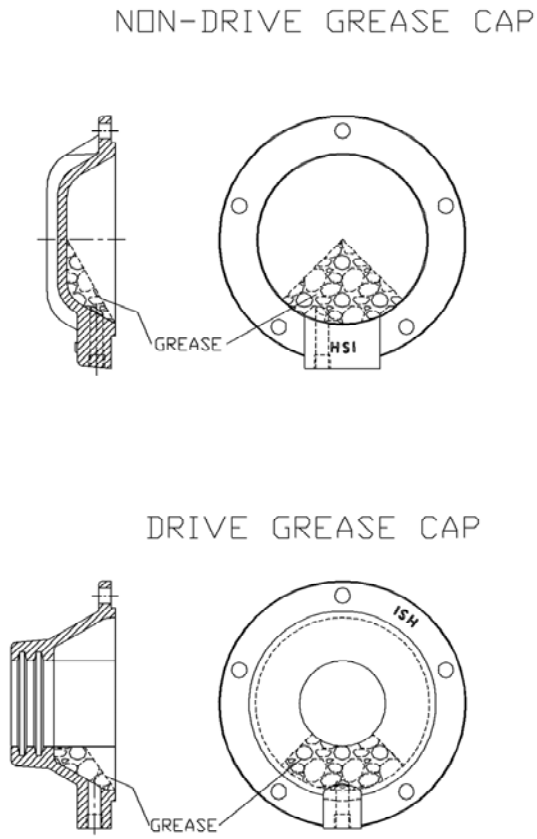

Figure 21. Grease hand packing

After re-greasing, if bearing temperature exceeds recommended temperatures, remove a small amount of grease and re-run.

If the inlet (thrust end) gasket is damaged, replace it with a gasket of the same thickness in order to maintain the thrust.

Grease Quantities

Series	Full Replacement
031	1.6 oz (45 g)
051, 052	3.1 oz (87 g)
061, 081, 082, 086	5.5 oz (154 g)
126	7.2 oz (174 g)

SECTION X - MAINTENANCE

Some simple maintenance procedures will help prolong the life of your blower:

1. Periodically inspect foundation and correct if deficiencies are found. Check for level condition and correct as necessary.
2. Check condition of isolation pads and replace as necessary.
3. Make sure lubrication maintenance schedule is established and adhered to.
4. Periodically check all valves in system. A stuck or broken valve can cause severe damage to equipment.
5. Alignment should be checked and corrected annually.
6. Check pipe supports and adjust if necessary.
7. Keep equipment clean. If machine is oil lubricated, be sure to keep oiler bottle clean so oil, or lack of, can be seen. Keep oil breather cleaned to prevent leaks.
8. Follow motor manufacturer's recommendations for motor maintenance.
9. Vibration readings and bearing temperature readings should be taken periodically to monitor the condition of the machine bearings which are the most critical component in your machine. If equipment to do this is not available, consult HSI.

SECTION XI - DRIVE/MOTOR

The mechanical energy used to run HSI centrifugal blower comes from an electrical motor for the majority of applications, however other drives can also be used i.e. (steam turbines and combustion engines). These drives can have unique and critical operating characteristics. Any special instructions required are provided separately and should be referenced whenever work or adjustments to these unique drive units are contemplated.

SECTION XII - SERVICE

There are some service functions that can be easily performed on your centrifugal blower. These include bearing changes, seal changes, coupling service and some other external type repairs.

Major repairs usually require dismantling of the machine. This should only be performed by an HSI Factory Service Technician. In all cases, you should contact HSI in Houston, Texas. Call: 713-947-1623.

Failure to notify HSI prior to working on your centrifugal blower for any reason within the warranty period can void the factory warranty.

1. Bearing removal and replacement
   This section applies to inlet and outlet, motor or belt driven machines for air or gas service.

   a) Inlet Bearing Replacement
      This is a fixed (thrust) bearing which has little or no movement. When replacing the bearing keep notes of the tolerances and gasket thickness to insure the bearing housing is reassembled correctly. The fixed bearing is set at factory - the settings should **NOT** be changed. Incorrect assembly of the thrust bearing can move the rotor assembly forwards or back causing damage to the impellers.

Some gas tight machines, regardless of lubrication, have purged shaft seals. The purge connections will be visible through the openings in the bearing housing. These connections should be removed at this time.

A bearing, once removed for any reason, must always be replaced, regardless of its condition or appearance. Removal poses the risk of damage or contamination. All gaskets must be replaced with factory replacements regardless of appearance or condition. The gasket thicknesses are critical to component spacing.

Failure to adhere to above may void factory warranty.

b) Outlet Bearing Replacement

This is a floating (non-thrust) bearing which allows for thermal growth. The bearing is set from the factory – these settings should **NOT** be changed. When taking the outlet bearing assembly apart keep track of the order in which the hardware (shims, gaskets, washers etc.) is removed, to insure that all components are reassembled correctly. This will insure the proper performance of the bearing.

- Keep all parts, work areas and installation tools clean and free from debris.
- Apply a light coat of oil or grease to housing bore, shaft journal and lands of labyrinth (if applicable). Apply a light coat of grease or oil to the bearing contact surfaces only.
- Bearing should be lightly tapped into position by applying force to the inner and outer race simultaneously. Never hammer on a bearing or use excessive force for installation.
- Do not apply excessive amounts of heat to bearing. It is not necessary. A light heating may be used if desired.

2. Seal removal and replacement

Typical labyrinth seal and carbon ring seal arrangements are shown on page 30 and 31.

a) Labyrinth Seals

Labyrinth seals are a non-contact air seal at the shaft. Replacement is necessary when air begins to escape from inside the blower. A slight amount of leakage is normal and is not cause for seal replacement. To replace seals, the bearing housings must be removed.

Removal

Follow the procedure in Section XII-1 for bearing and bearing housing removal. After the bearing housing is removed, the seal can be removed.

There are no gaskets under the labyrinth seal.

Replacement

- To replace seal, apply a coating of grease to the lands of the labyrinth and CAREFULLY slide seal over shaft. Too much grease will negate the effectiveness of seal. Do not fill grooves. The labyrinth is soft. Mishandling will result in damage.
- Labyrinth seals may be either smooth or boss fit. If smooth, bolt the seal to head HAND TIGHT only. Only tighten after the machine is completely reassembled and while the machine is running. If the seals are boss fit, they should be tightened prior to installing the bearing housing.
- On gas machines the seals must be installed with spring washers and "Loctite®" applied to mounting bolts. Tighten bolts just enough to allow

the seal to self center when the bearing is installed. The "Loctite®" will lock the mounting bolts in place so that the seal stays centered on the shaft.

b) Carbon Ring Seals
Carbon seals are a contact seal on the shaft. Replacement is necessary when air begins to escape from inside the blower. A slight amount of leakage is normal and is not cause for seal replacement.

Removal
To replace seals, the bearing housings must be removed. Follow the procedure in Section XII-1 for bearing and bearing housing removal. After the bearing housing is removed, the carbon ring retainer can be removed. Disassemble the carbon ring retainer and remove old carbon ring seals.

Replacement
Clean and dry retainers, install new seals and reassemble retainers, making sure the seals move freely.

Use caution when working with carbon rings as they are extremely brittle and break easily. Check for cracks or chips and replace as necessary.

3. Coupling Maintenance
Centrifugal blowers use a variety of couplings and belt drives. Proper use and maintenance is critical to the operation of the machine and safety of personnel. Prior to starting machine, coupling alignment must always be performed by installer of equipment (see Section VII).

- After alignment and at periodic intervals thereafter, check to make sure set screws are tight.
- Check center element or disc packs for wear and replace worn parts immediately.
- If coupling is a lubricated type coupling, be sure to follow manufacturer's lubrication schedule.
- Check and correct shaft and hub spacing as necessary.
- Always operate machinery with coupling guard in place.
- Always check coupling spacing at shaft separation. Improper spacing will cause elevated vibration readings. Check manufacturer recommendations for spacing
- On sleeve bearing motors, be sure motor shaft is in correct axial position.

For specific coupling maintenance see manufacturer's operating manual.

4. V-Belt Maintenance
- After initial run-in period, re-tension belts as necessary (see Section VII).
- Always use matched belts.
- Never install belts by rolling them over the sheave as this will shorten life considerably. Loosen motor and move sheaves closer together to remove and install belts.
- Inspect belts for cracks or heat glazing and replace if evident.
- Never use belt dressing.

- Use only belts identical to those originally supplied.

5. Parts for Replacement
   Most replacement parts are available from factory inventory for same day shipment. When ordering replacement parts, please have the machine serial number and catalog or model number available, as well as any additional information such as special application, etc., which will help expedite your parts shipment.

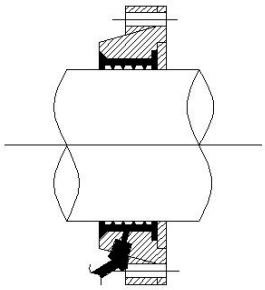

PURGED
LABYRINTH SEAL

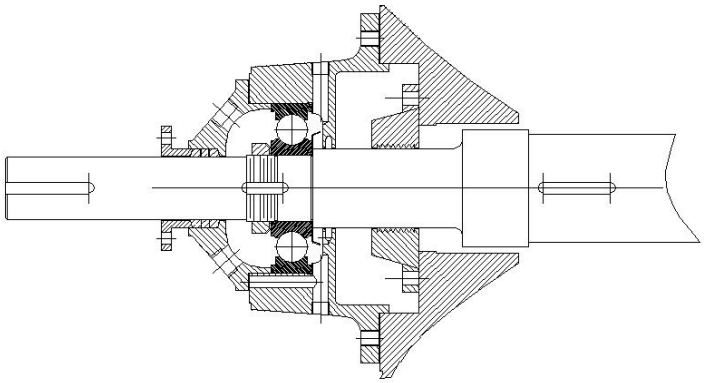

BRG. HOUSING GAS / LABYRINTH SEAL ASSY.
(STANDARD)

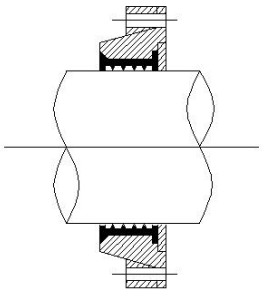

LABYRINTH SEAL

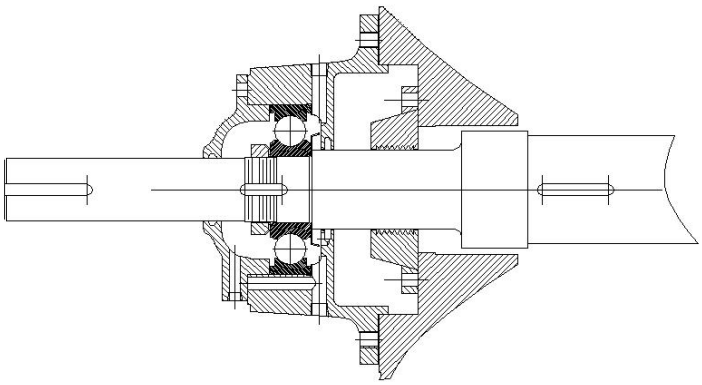

BRG. HOUSING AIR / LABYRINTH SEAL ASSY.
(STANDARD)

Figure 22

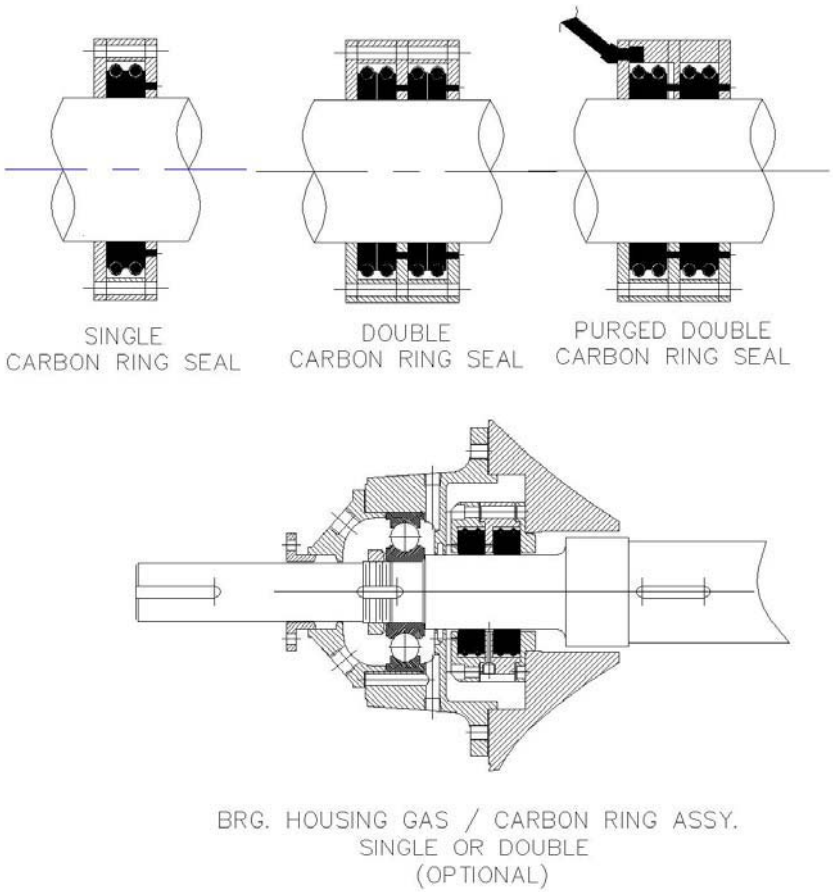

Figure 23

For custom seals see job specific drawings.

Possible Causes and Remedies

REDUCTION OF PERFORMANCE	Inlet filter dirty	Replace filter element
	Valves either up stream or down are not properly adjusted	Check and correct
	Piping either up stream or down partially obstructed	Check and correct
	Direction of rotation of the blower has changed	Check and correct
	Excessive product in blower causing restricted flow	It maybe necessary to overhaul blower to remove product
	Change in the process	Check and correct

EXCESSIVE TEMPERATURE	Increased inlet temperature	Check and correct
	Reduction in capacity of gas processed	Increase capacity
	Running in surge	increase flow
	Excessive back pressure from process down stream	Check and correct
	Clogged intake filters	Check and correct
	Poor ventilation in room	Increase ventilation

PULSING NOISE	Indicates blower running in surge	Increase gas flow
A HIGH FREQUENCY SQUEAL	Indicates a possible deterioration of bearings	Replace bearings
A SCRAPING SOUND (METAL TO METAL)	May indicate an internal rub	Shut machine down and consult factory

HIGH BEARING TEMPERATURE	Too much or too little lubrication	Check and correct
	Wrong lubricant	Check and correct
	Wrong class of bearing	Replace with proper class bearing
	Bearing failing	Change bearing
HIGH OUTLET BEARING TEMPERATURE	A rise in discharge temperature	Check and correct
	Blower running close to or in surge	Check and correct
	High ambient temperature	Check and correct
	Seal dragging	Check condition of seals replace if needed

EXCESSIVE POWER CONSUMPTION	Valves up stream or down not properly adjusted	Check and correct
	Change in inlet condition	Reduce flow
	All valves completely open (on start up)	Check and correct
	Resistance from liquid in machine (on start up)	Open drain plugs

HIGH VIBRATION	Deterioration of bearings	Replace bearings
	Soft foot in the blower or motor feet	Check for soft foot and shim as needed
	Blower skid twisted or poor contact with vibration isolation pads	Check and correct
	Misalignment between blower and drive	Check and correct
	Rotor imbalance due to excessive belt tension	Check and correct
	Rotor imbalance due to deterioration of impellers or clogging of the impeller with product	Blower must be disassembled and impellers cleaned or replaced
	Improper piping installation	Check for binding or excessive weight on flanges

BEARING FAILURE	Not using proper bearings	Check and correct
	Not using recommended lubricant	Check and correct
	Excessive lubricant	Remove some lubricant
	Improper assembly	Check with factory
	Bearing housing or shaft are out of tolerance	Check with factory
	Coupling out of alignment	Check and correct
	Shafts not rotated weekly on idle units	Rotate shaft once a week on idle units

Many non-mechanical problems can lead to frequent or repeated bearing failure. These may include improper installation, application or operation of machine.

SURGE	Restricted inlet piping or dirty inlet filter	Check and correct
	Restricted outlet piping	Check and correct
	Increased back pressure in down stream process	Check and correct
	System imbalance	Check and correct
	Incorrect valve control at inlet	Open inlet valve

SECTION XIV - SPARE PARTS & ORDERING

HSI carries a full line of replacement and spare parts for your centrifugal blower needs. The recommended spare parts noted below are those which are normally most subject to wear or damage and should be considered a guide only. Due to variations in the unit construction, checking with HSI will insure that you get the proper replacement parts and correct quantities needed. Contact HSI for current pricing.

Bearing Kit Contents

- Bearings
- Bearing Lock Nuts and Lock Washers
- Grease Slingers (if applicable)
- Oil Slingers (if applicable)
- Gaskets - bearing housing/cap/seal(if applicable)
- Bearing Shims (if applicable)
- Wavy Spring Washer (if applicable)
- Oil Conversion Nuts (if applicable)
- Lip Seals (if applicable)

Repair kit contains the same items as the bearing kit plus labyrinth or carbon ring seals.

If possible, spare parts should be purchased at the same time as the original equipment. This insures that the spare parts will duplicate the original material and sizes on hand, thus minimizing equipment down time.

When contacting the factory have the complete blower or exhauster nameplate data ready:

- Model Number
- Serial Number
- HSI Order Number

Ordering Replacement Parts

When ordering replacement parts, provide a description and part number, whenever possible. Replacement bearings **must** be exactly equal to original. See exploded view drawing and parts list for part number and part description.

Contact Information

HSI, Inc.
7901 Hansen
Houston, TX 77061

Phone: (800) 725-2291 or (713) 947-1623 Fax: (713) 947-6409
E-Mail: sales@hsiblowers.com
Web-site: www.hsiblowers.com

Soft foot is the condition whereby not all of the support points of a machine rest evenly on their anchoring surface. Soft foot is present if the machine mounting foot moves when any of the anchor bolts are loosened.

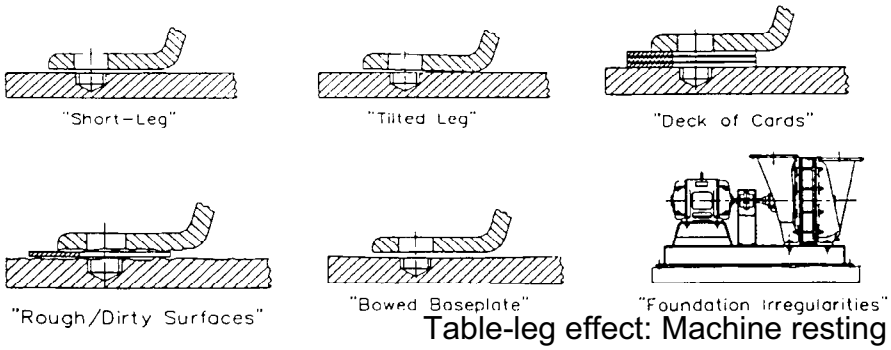

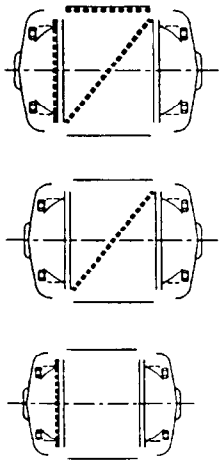

Table-leg effect: Machine resting on three feet. Shim one foot only.

Diagonal effect: Machine resting on two feet. Split the additional shims evenly between the two soft feet.

Slanted Pedestal effect: Machine resting on two feet, leaving other side or end higher. Shim equally to bring the plane formed by the bottom of the four feet parallel with the base plate or pedestal.

APPENDIX B

1. General Maintenance Instructions during Extended Storage

Storage Area
All bare and base blowers must be stored in a clean, dry, heated warehouse. The storage area should be free of ambient or transient vibration.

Motor Maintenance
Refer to the motor instruction manual for instructions on periodic checks required and for specific instructions.

Blower Maintenance
When the blower is prepared for extended storage, the internal surfaces are protected by the insertion of vapor phase inhibitors in the inlet and discharge openings. Every six months, one protective flange cover should be removed to inspect internal surfaces of the machine. Renew vapor phase inhibitors if evidence of rust is visible. Inspect exterior surfaces and spray with a rust preventative* where necessary.

Rotate the blower shaft at least once per week during storage. Inspect the blower shaft (near the shaft seal area) monthly and spray with rust preventative* if needed.

2. Instructions for the removal of products used for extended storage protection

Vapor Phase Inhibitors
All protective flange covers should be removed. Remove vapor phase inhibitors which are attached either to the cover or immediately inside the cover.

Spray Rust Preventative*
Removal not required.

* Refer to attached MSDS for safety information regarding this product

SURGE IN CENTRIFUGAL BLOWERS AND EXHAUSTERS

A centrifugal blower is normally connected to a piping system and delivers air through that system for ultimate use on some required operation. If the demand of this operation (and consequently of the piping system) gradually or suddenly decreases, the pressure from the blower and in the piping system will increase until it reaches the highest pressure peak of which the blower is capable.

If the load or volume requirement (demand) decreases still further, the blower delivery pressure tends to decrease from its peak, resulting in the pressure in the piping system becoming greater than the pressure from the blower. Air then tends to reverse its direction and flow back into the blower until both pressures become equalized and the blower can again resume its normal function of pumping air into the system.

Until demand requirements increase, this backward and then forward flow of air - this pulsation or surge - will continue. It can cause undue strains on the blower and possibly failure of bearings and/or rotating assembly due to repetitive thrust strain and overheating. It is costly and dangerous to permit volume (load) requirements to drop so low as to cause surge.

Perhaps the foregoing will be more easily understood by reference to the sketch below, which is a typical pressure volume curve of a centrifugal blower. Point “A” indicates the normal operating point of a blower. Point “E” is the high point on the curve. Stable conditions will always be experienced when the volume demand is to the right of this point. Under actual operation, surge is not a factor until the volume demand of the system drops to a point to the left of point “E”, and until pressure consequently drops below that point.

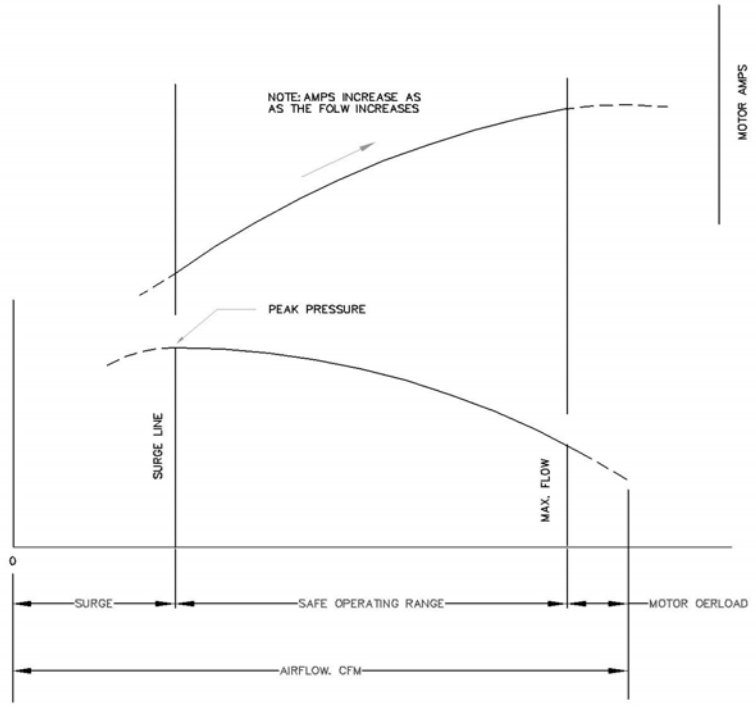

Figure 23

WARRANTY AND LIMITATION OF LIABILITY

The seller hereby warrants the Multistage Centrifugal Blower by Houston Service Industries to be free from defects in material and/or workmanship under normal use and service for a period of one (1) year. This warranty applies only to equipment manufactured by Houston Service Industries, Inc. and does not cover motors, starters, electrical equipment or other components or accessories manufactured by others. The Seller will repair or replace, F.O.B. its factory, any defective part or parts, at no charge, if returned to it within ONE YEAR from DATE OF SHIPMENT. This warranty extends only to the original purchaser of equipment furnished hereunder and shall be void if the product is repaired or tampered with in any manner other than by the Seller's authorized service personnel. If inspection does not disclose a defect covered by the warranty, the equipment will be returned to Purchaser at its expense or, if Purchaser elects, the seller will repair or replace the equipment and charge for such service at the regular rate. If the Seller is not an insurer, and if Seller is held liable for loss or damage, its liability shall be limited to $100.00 or 10% of the contract price, whichever is greater.

THE SELLER MAKES NO WARRANTIES, EXPRESS OR IMPLIED, AS TO THE MERCHANTABILITY OR AS TO THE SUITABILITY OF THE EQUIPMENT FOR ANY PARTICULAR PURPOSE, AND THE SELLER DOES NOT WARRANT THE EQUIPMENT IN ANY MANNER WHATSOEVER EXCEPT AS EXPRESSLY STATED IN THIS AGREEMENT.

Houston Service Industries, Inc.

Factory Data Sheet

WO31802

Work Order ID	Part ID	Release	Want Date	Start Date	Finish Date	Qty	Drawing ID/Rev
WO31802/1		7/26/2010	10/1/2010			1.00	

Cust Order#: CO029899
Date: 7/26/2010
Ship Via: Best Way
Cust PO#: 231625
Contact : KRISTI WADE

Customer: PERENNIAL
PERENNIAL ENERGY
1375 COUNTY ROAD 8690
WEST PLAINS, MO 65775

Ship To:
Same

FACTORY DATA

```
(1) HSI 05108 MC GAS PACKAGE - NEW
SERIAL NO(1): 0710768-31802

____________________________________________________________
            BLOWER SPECIFICATIONS
____________________________________________________________
DRIVE       : INLET DIRECT (OP SPEED 3822 RPM)
INLET ORIENT: POS.1 VERTICAL
DISCH ORIENT: POS.1 VERTICAL
SHAFT MAT'L : 416 STAINLESS STEEL
BRG HSG TYPE: CLOSED
BRG SIZE    : 310
SEALS       : LABYRINTH
LUBE        : GREASE
BRASS DFLCTR: NO
PAINT COLOR : PEI STANDARD SAND COLOR
____________________________________________________________
            IMPELLER INFORMATION
____________________________________________________________
STARTING AT INLET
WHEEL #1-8  : 5012 CAST B.C.
COATING     : NONE
____________________________________________________________
           ADDITIONAL COMPONENTS
____________________________________________________________
SKID        : YES (1) 24.5"X 80.5" HSI STANDARD
MOTOR BASE  : YES (1) 324TS HSI STANDARD
MOTOR       : YES (1) BALDOR 40HP 230/460V, 3 PHASE,
              60 HZ, TEFC, PREMIUM EFFCY, 3530 RPM
              1.15 SF
COUPLING    : YES (1) OMEGA E05 W/STANDARD GUARD
CHECK VALVE : NO
B/FLY VALVE : NO
EXP JNT/TUBE: NO
TEMP SENSOR : NO
VIBR SENSOR : NO
PRES GAUGE  : NO
FLTR/SILNCER: NO
RUBBER BASE : YES (6) 5/8"X6"X6" NEOPRENE PADS
COATING     : YES HERESITE P403L COAT ALL INTERNAL
              CAST IRON EXCLUDING IMPELLERS
____________________________________________________________
                  COMMENTS
____________________________________________________________
1) DRILL/TAP BEARING HOUSING TO 1/2" NPS
2) ROTOR WEIGHT NOT TO EXCEED 190 LBS
3) PROVIDE INTERNAL DRAINS TO 1/2" BALL VALVE
4) LIFTING LUGS REQUIRED
5) BUBBLE TEST REQUIRED TO 13 PSIG
6) NONWITNESSED PERFORMANCE TESTING PER ASME PTC-10
7) SPARE PARTS TO INCLUDE (1) 14OZ TUBE GREASE
8) TAG BLOWERS "JOB # 1641"
9) FREIGHT SHOULD BE PREPAY & ADD
```

****** CONTINUED ON NEXT PAGE **********

```
****** REVISION 1 BY M. BOUKNIGHT ON 02/08/11 *******
1) REVISED BLOWER PAINT COLOR TO PEI STANDARD
   SAND COLOR


****** REVISION 2 BY M. BOUKNIGHT ON 02/17/11 *******
1) ADDED NOTE 8 - REVISED COMMENT NUMBERING
```

REVISIONS		
REV	DESCRIPTION	DATE
0	INITIAL DRAWNG	06/18/09

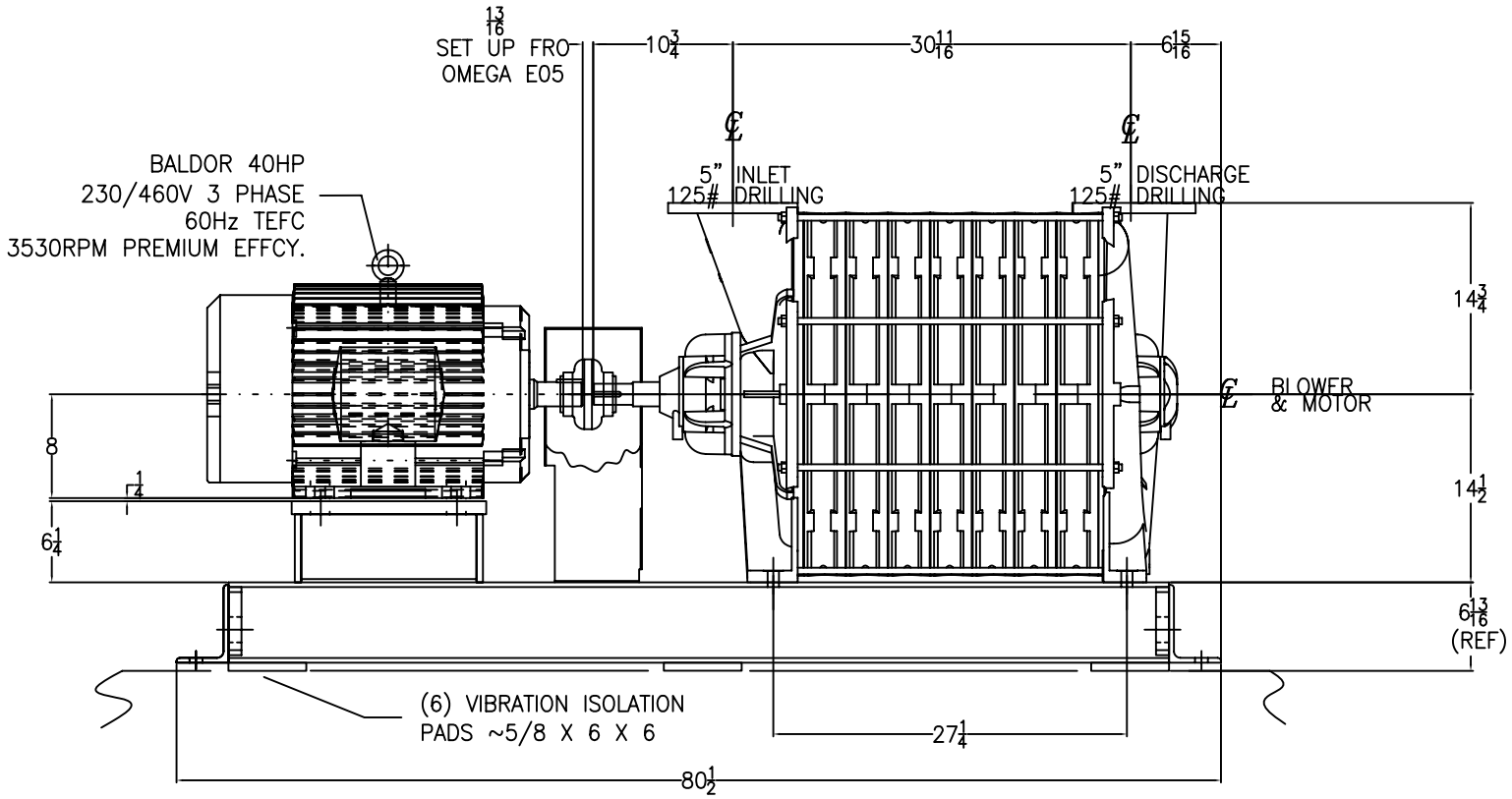

NOTES:
1. APPLICATION: GAS
2. LUBRICATION: GREASE
3. PROVIDE INTERNAL DRAINS W/ A 1/2" BALL VALVE
4. IMPELLER MIX: (8) 5012
5. DRILL/TAP BEARING HOUSING (1/2" NPS)
6. PROVIDE LIFTING LUGS
7. HERESITE P403L COAT ALL INTERNAL CAST IRON EXCLUDING IMPELLERS
8. 3,822 RPM OPERATING SPPED

UNLESS OTHERWISE SPECIFIED ALL DIMENSIONS ARE IN INCHES
TOLERANCES
FINAL OUTSIDE DIM. WHEN MEASURED FROM OPP. OUTSIDE DIM. ±(1/8)
ELEVATIONS IN REF. TO ANY OTHER ELEVATION ±(1/16)
TILTS IN BEAM FLANGE, WEB, OR SURFACE ±(1/2 DEG.)
BUT NOT TO EXCEED 1/8in.
BOLT HOLE ORIENTAION ±(1/16)

THIRD ANGLE PROJECTION

MATERIAL:

DRAWN BY	CRS	07/22/10
CHECK'D BY	MB	07/30/10

HOUSTON SERVICE INDUSTRIES
7901 HANSEN, HOUSTON, TX 77061

TITLE
HSI 051 SERIES 08 STAGES
BLOWER ASSEMBLY (SIDE VIEW)

SIZE	PRT. NO./DWG. NO.	REV
B	W031802-001	0

SCALE: NONE | DO NOT SCALE DRAWING | SHEET: 1 OF 2

PERENNIAL ENERGY W031802-001

REVISIONS		
REV	DESCRIPTION	DATE
0	INITIAL DRAWNG	06/18/09

5" INLET & DISCHARGE FLANGE DETAIL
125# DRILLING

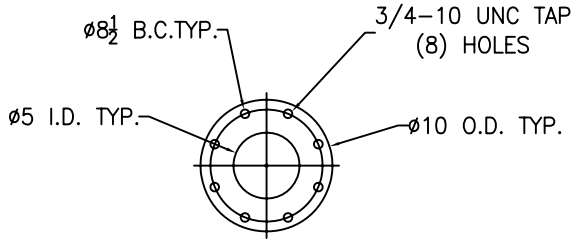

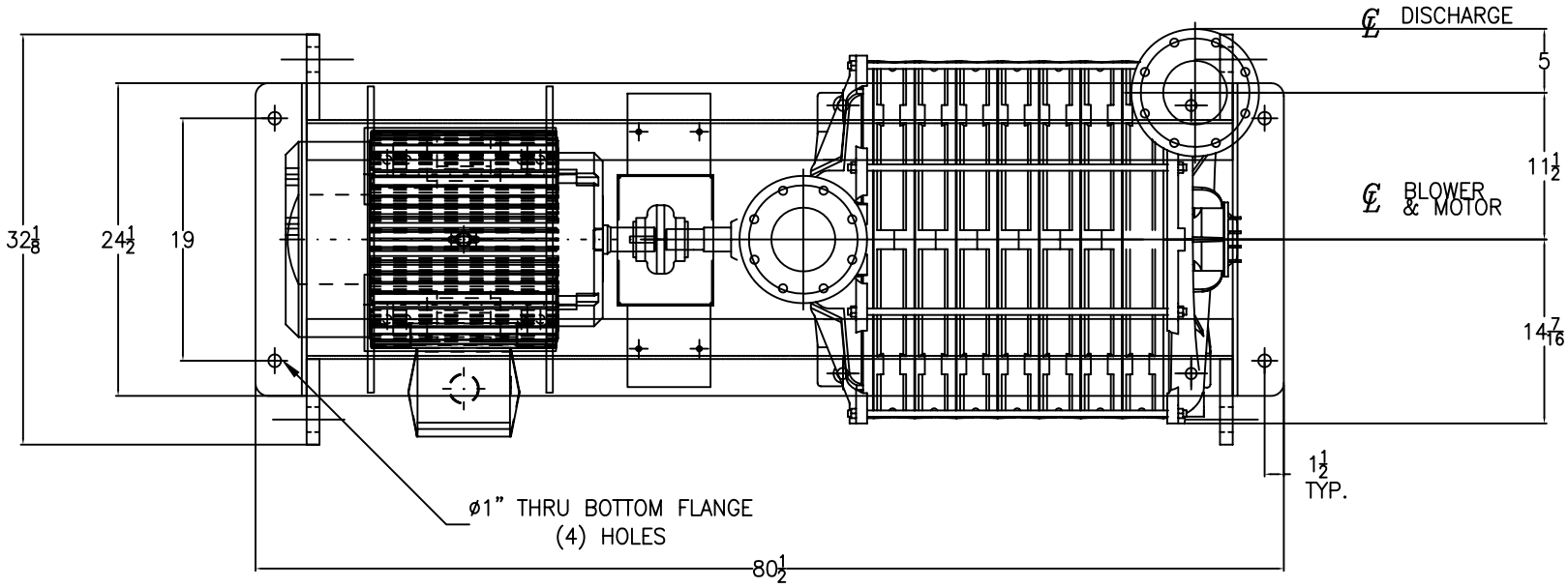

ESTIMATED WEIGHTS

BLOWER	1,370 LBS
MOTOR	540 LBS
SKID	295 LBS
MOTOR BASE	110 LBS
COUPLING	5 LBS
TOTAL	2,320 LBS

UNLESS OTHERWISE SPECIFIED ALL DIMENSIONS ARE IN INCHES
TOLERANCES
FINAL OUTSIDE DIM. WHEN MEASURED FROM OPP. OUTSIDE DIM. ±(1/8)
ELEVATIONS IN REF. TO ANY OTHER ELEVATION ±(1/16)
TILTS IN BEAM FLANGE, WEB, OR SURFACE ±(1/2 DEG.) BUT NOT TO EXCEED 1/8in.
BOLT HOLE ORIENTAION ±(1/16)

THIRD ANGLE PROJECTION

MATERIAL:

DRAWN BY	CRS	07/22/10
CHECK'D BY	MB	07/30/10

HOUSTON SERVICE INDUSTRIES
7901 HANSEN, HOUSTON, TX 77061

TITLE
HSI 051 SERIES 8 STAGES
BLOWER ASSEMBLY (TOP VIEW)

SIZE	PRT. NO./DWG. NO.	REV
B	W031802–001	0

SCALE: NONE | DO NOT SCALE DRAWING | SHEET: 2 OF 2

PERENNIAL ENERGY W031802–001

Maximize®
Blower/Exhauster Design Datasheet

Datasheet No.: **41167**
Design Date : **3/23/2010**
Quote/Job No.:
Prepared By : **mwells**

Customer

Perennial Energy

Project

Site Data

Elevation: **2020** ft a.s.l.

Gas Data

MW: **30.026** RH: **0.0%**
k : **1.2728** Cp: **0.3087**

Gas	Pct
Carbon Dioxide (CO2)	**50.000**
Methane (CH4)	**50.000**

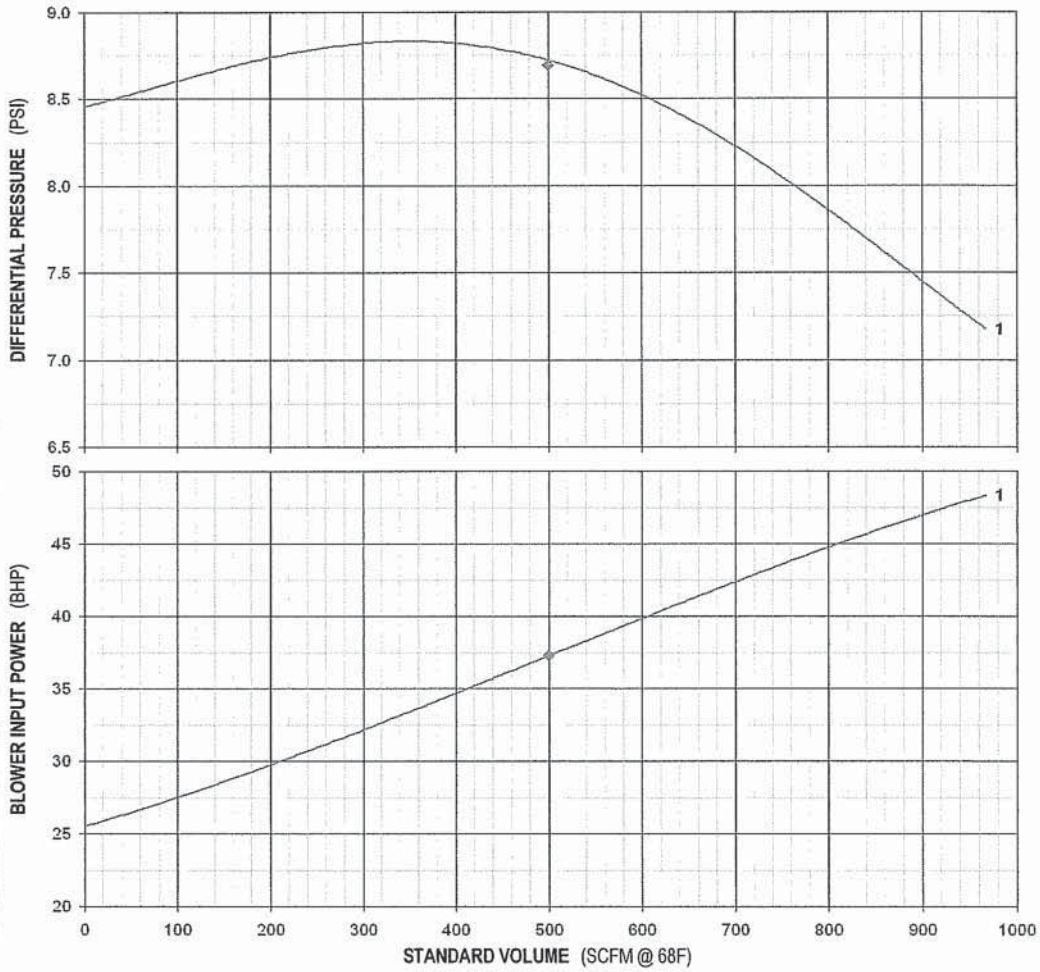

Curve Data

			1. Primary Curve
EXHAUSTER	Model		**HSI 5108**
	Configuration		
	Impeller 1		**(8) 5012**
	Impeller 2		
	Impeller 3		
	Driver		
	Control Method		
CONDITIONS	Op. Speed	[RPM]	**3,822**
	Inlet Throttling	[valve/%closed]	**none**
	Bar. Pressure	[PSIA]	**13.654**
	Disch. Pressure	[PSIG]	**7.25**
	Inlet Temp.	[°F]	**85.00**
	Inlet Humidity	[% RH]	**100.0**
	MW / k / Cp		**29.433/1.269/0.3185**
PERFORMANCE	Volume (Std.)	[SCFM@68F]	**500.0**
	Volume (Inlet)	[CFM]	**643.8**
	Inlet Vacuum	[inWC]	**40.00**
	Diff. Pressure	[PSI]	**8.69**
	Power (Shaft)	[BHP]	**37.31**
	Efficiency	[%]	**52.42**
	Disch. Temp.	[°F]	**210.83**
	Pressure Rise	[PSI]	**-0.23**
	Turndown	[%]	**100.00**
SURGE	Surge Pressure	[PSI]	**8.46**
	Surge Volume	[SCFM]	**0.0**

Model 51

HSI MULTISTAGE CENTRIFUGAL BLOWERS

General Performance

Model 51 Blower

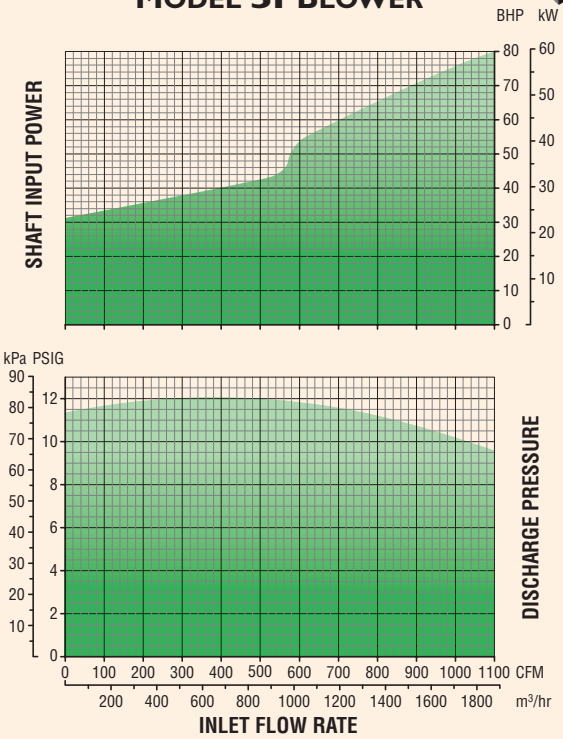

Model 51 Exhauster

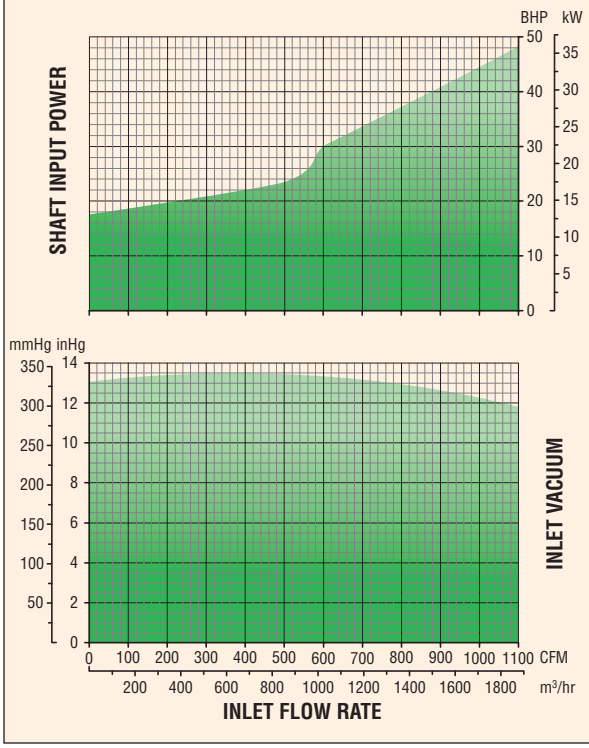

Specifications Standard

TECHNICAL DATA

Number of Stages	1 through 10
Inlet Connection	5″ (127.0 mm) flange, ASA 125# / ANSI 150# drilling
Outlet Connection	5″ (127.0 mm) flange, ASA 125# / ANSI 150# drilling
Operating Speed	3550 RPM (60 Hz), 2960 RPM (50 Hz)
Casing Pressure	20 PSIG (1.41 kg/cm^2)
Seals	Labyrinth type
Bearings	Ball, 10-year minimum life per AFBMA L_{10} standard
Lubrication	Grease
Impeller Diameter	22.00 in (558.8 mm)
Impeller Tip Speed	341 ft/s (104 m/s) @ 3550 RPM
First Critical Speed	4505 RPM (10-stage)
Drive Type	Direct coupled Inlet driven
Shaft End	1.625 in (41.28 mm) diameter at coupling
Vibration Tolerence	.25 in/s (6.4 mm/s) ISO overall specification, 1.25 mils (0.03 mm) peak to peak
Rotor Balance	Military standard 167-1. Individual impellers and rotating assembly dynamically balanced

MATERIALS OF CONSTRUCTION

Casing	Cast iron ASTM A48 grade 25/30
Bearing Caps & Housings	Cast iron ASTM A48 grade 25/30
Oil Reservoir	Cast iron ASTM A48 grade 25/30
Shaft	Carbon steel AISI 4140 (stainless steel available)
Impellers	Cast aluminum ANSI AA319/356
Seals	Cast iron ASTM A48 grade 30 with lead babbitt insert Zinc-Alloy, ZA-12
Tie Rods	.50 in (12.7 mm) diameter, high strength steel ASTM A193-B7/B7M available
Blower Base	Welded structural steel ASTM A36 ASME/AWS D1.1 WPS's available
Motor Pedestal	Welded steel plate ASTM A36
Joint Sealing Compound	RTV silicone
Base Isolation Pads	Neoprene rubber
Finish	HSI standard

Curves are based on atmospheric conditions of 1 Atm, 68F/20C, 36% RH, and 3550 rpm

MODEL 51 MULTISTAGE CENTRIFUGAL BLOWER

Inlet and Outlet Orientation Options

The orientation of the inlet and outlet is selectable from any of three different positions, as viewed when facing the exterior of the part:

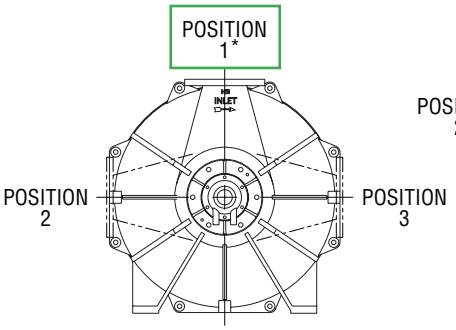

INLET POSITIONS

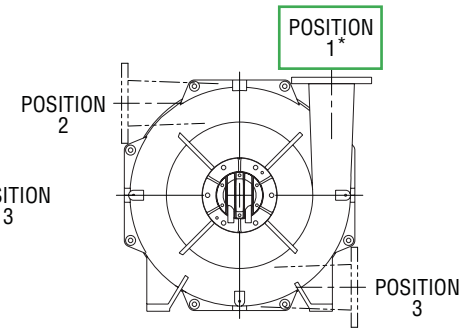

OUTLET POSITIONS

*Standard configuration.

Weight and Inertia

Model	Weight* lb	Weight* kg	Wk² lb-ft²	Wk² kg-m²
5101	480	218	6	0.26
5102	607	275	12	0.51
5103	730	331	18	0.76
5104	860	390	24	1.02
5105	987	448	30	1.27
5106	1113	505	36	1.52
5107	1240	562	42	1.77
5108	1367	620	48	2.03
5109	1493	677	54	2.28
5110	1620	735	60	2.53

*Approximate weight for blower only.

General Arrangement

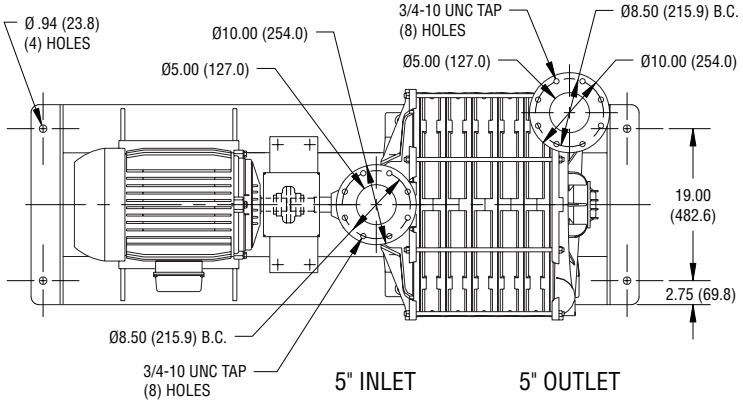

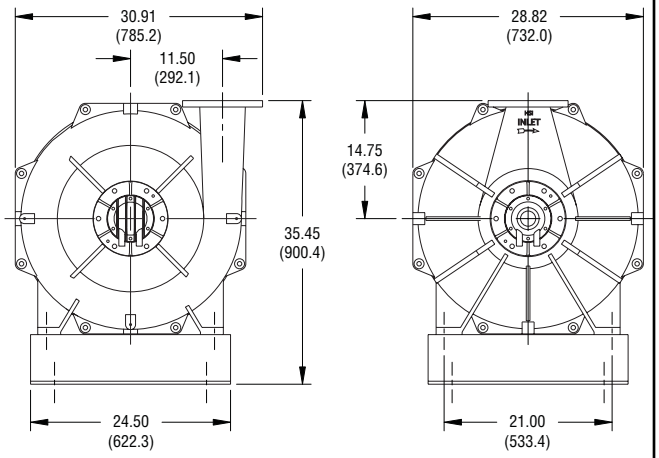

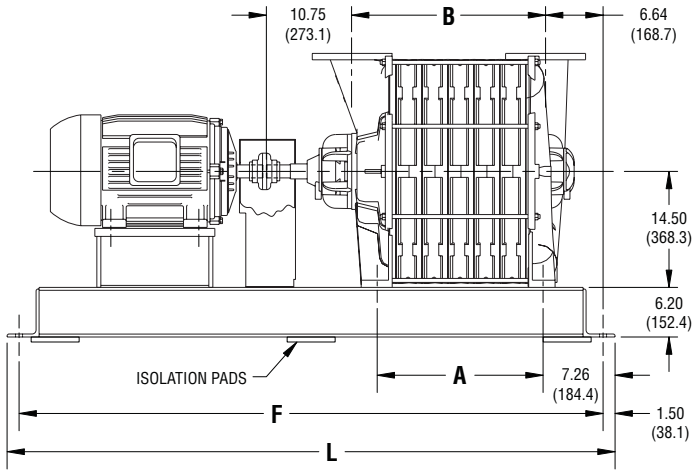

Model	Dimensions* A	Dimensions* B	F†	L†
5101	4.63 (117)	8.00 (203)	SEE DRAWINGS FOR DIMENSIONS	
5102	7.88 (200)	11.25 (286)		
5103	11.13 (283)	14.50 (368)		
5104	14.38 (365)	17.75 (451)		
5105	17.63 (448)	21.00 (533)		
5106	20.88 (530)	24.25 (616)		
5107	24.13 (613)	27.50 (699)		
5108	27.38 (695)	30.75 (781)		
5109	30.63 (778)	34.00 (864)		
5110	33.88 (860)	37.25 (946)		

*Dimensions in inches and (millimeters) and are approximate. Do not use for construction purposes.

†Dimension may vary depending on motor frame size.

MULTISTAGE CENTRIFUGAL BLOWERS

HSI, Inc.
7901 Hansen Rd., Houston, Texas 77061
713-947-1623
800-725-2291
Fax: 713-947-6409
www.hsiblowers.com
hsi@hsiblowers.com

E-TS-051-001, REV 02-10/07

051 - GREASE LUBRICATION

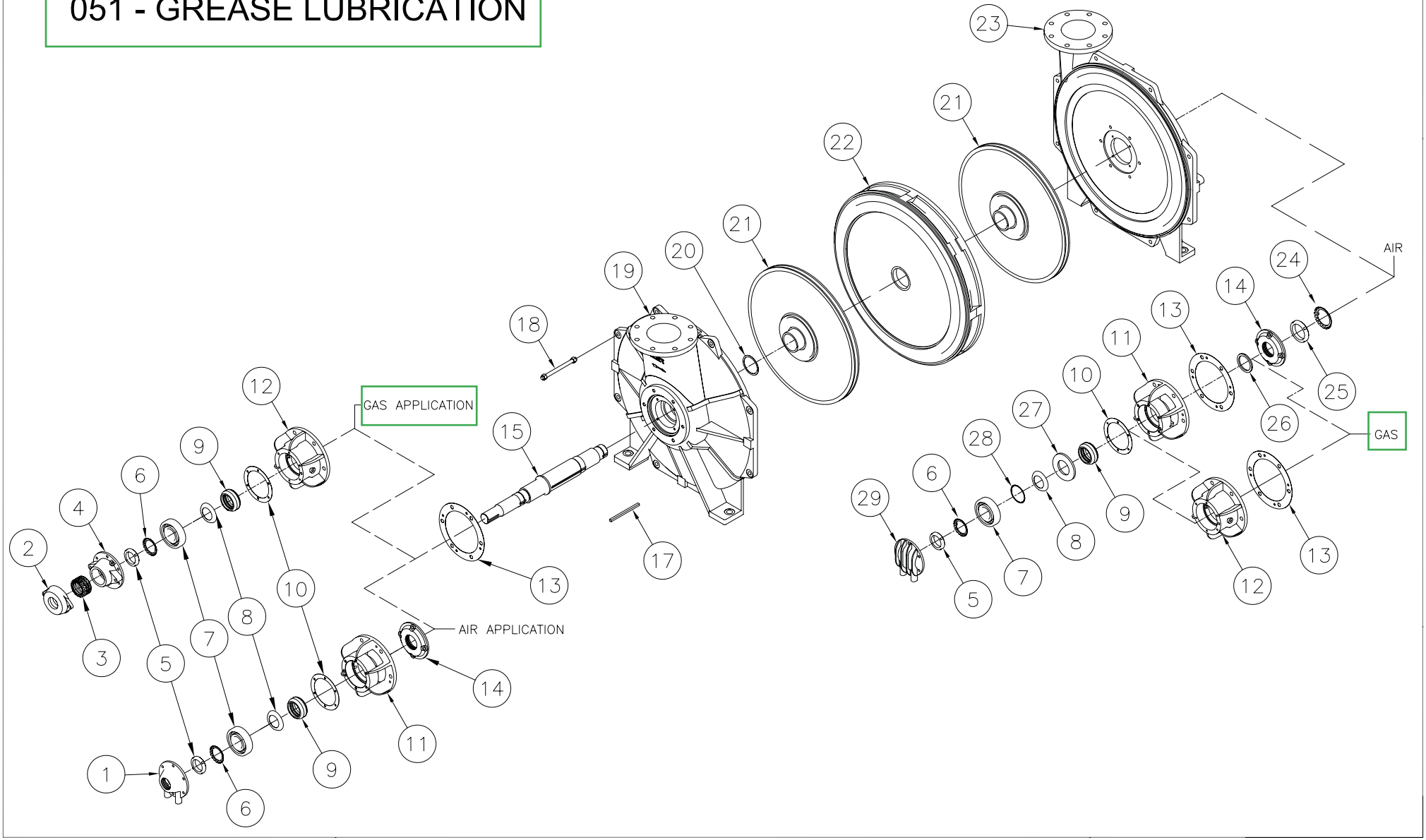

HSI Series 051 Multistage Centrifugal Blower

Parts List

No.	PART NUMBER	PART DESCRIPTION
1	150512811	Cap, Grease, Drive, Thrust
	150512821	Cap, Grease, Drive, Non-Thrust
2	150512853	Cover, Packing Gland
3	150512854	Packing Set
4	150512851	Cap, Brg Hsg, w/Packing Gland, Thrust
5 B, R	LKNUT-N10	Locknut, N-10
6 B, R, C	LKWASHER-W10	Lockwasher, W-10
7 B, R	BRG-310	Bearing, 310 Open
8 B, R	150512642	Slinger, Grease
9 R	150512711	Laby, Brg Hsg Insert
10 B, R, C	15051291	Gasket, Cap Grease/Oil Reservoir
11	15051201	Bearing Hsg., 310, Open
12	15051202	Bearing Hsg., 310, Sealed
13 B, R, C	15051292	Gasket, Bearing Hsg.
14 R	15051721ZA	Labyrinth Seal, Flat
15	15051111	Shaft, Grease or Oil, 1 Stage
	15051121	Shaft, Grease or Oil, 2 Stage
	15051131	Shaft, Grease or Oil, 3 Stage
	15051141	Shaft, Grease or Oil, 4 Stage
	15051151	Shaft, Grease or Oil, 5 Stage
	15051161	Shaft, Grease or Oil, 6 Stage
	15051171	Shaft, Grease or Oil, 7 Stage
	15051181	Shaft, Grease or Oil, 8 Stage
	15051191	Shaft, Grease or Oil, 9 Stage
	150511101	Shaft, Grease or Oil, 10 Stage
16	150511112	Shaft, Oil, w/double Carbon, 1 Stage
	150511212	Shaft, Oil, w/double carbon, 2 Stage
	150511312	Shaft, Oil, w/double carbon, 3 Stage
	150511412	Shaft, Oil, w/double carbon, 4 Stage
	150511512	Shaft, Oil, w/double carbon, 5 Stage
	150511612	Shaft, Oil, w/double carbon, 6 Stage
	150511712	Shaft, Oil, w/double carbon, 7 Stage
	150511812	Shaft, Oil, w/double carbon, 8 Stage
	150511912	Shaft, Oil, w/double carbon, 9 Stage
	1505111012	Shaft, Oil, w/double carbon, 10 Stage
17	15051551	Key, Impeller
18	15051046	Rod, Tie
19	150513111	Housing, Inlet (5" flange) Pos. #1
	150513211	Housing, Inlet (5" flange) Pos. #2
	150513311	Housing, Inlet (5" flange) Pos. #3
20	15051531	Shim, Impeller
21	150515011	Impeller, Cast, BC #1
	150515012	Impeller, Cast, BC #2
	150525021	Impeller, Cast, Radial #1
22	150518110	Housing, Intermediate
23	15051411	Housing, Discharge Pos. # 1
	15051421	Housing, Discharge Pos. # 2
	15051431	Housing, Discharge Pos. # 3
24	LKWASHER-W13	Lockwasher, W-13
25	LKNUT-N13	Locknut, N-13
26	1505173	Air Deflector, Ring, Brass
27 B, R	15051223	Wavy Spring Washer
28 B, R	15051221	Shim, Bearing, ID

HSI Series 051 Multistage Centrifugal Blower

Parts List

No.	PART NUMBER	PART DESCRIPTION
29	150512831	Cap, Grease, Non-Drive, Thrust
	150512841	Cap, Grease, Non-Drive, Non-Thrust
30	15051231	Bearing Housing Spacer
31	150517181SS	Adapter, Carbon Ring, w/Purge
32	26363	Carbon Ring
33	15051714SS	Retainer, Carbon Ring w/Purge
34	150517171SS	Adapter, Middle, Carbon Ring
35	15051713SS	Retainer, Carbon Ring
36	150517121SS	Adapter, Carbon Ring
37	15051741	Gasket, Carbon Ring
38 C	150512812	Cap, Reservoir, Drive
39 C	150512842	Cap, Reservoir, Non-Drive
40 B, R, C	15051293	Gasket, Cap Oil
41 B, R, C	150512621	Oil Slinger, w/Holes
42 C	150512861	Oil Reservoir, Thrust
43 C	150512862	Oil Reservoir, Non-Thrust
44 B, R, C	15051243	Spacer, Slinger, Oil Conversion Nut
45 C	18002	Oiler, Trico, 8oz

KITS		
	15051BRGKIT	051 / 052 Bearing Kit (Contains Parts Marked with B)
	15051REPKIT	051 / 052 Repair Kit (Contains Parts Marked with R)
	15051OILCON	051 / 052 Oil Conversion Kit (Contains Parts Marked with C)

SECTION 3

MOTOR

SPECIFICATIONS
IO&M MANUAL

BALDOR

BALDOR • RELIANCE

Product Information Packet

EM4109T

40HP,3530RPM,3PH,60HZ,324TS,1240M,TEFC,F

Copyright © All product information within this document is subject to Baldor Electric Company copyright © protection, unless otherwise noted.

Part Detail

Revision:	A	**Status:**	PRD/A	**Change #:**		**Proprietary:**	No
Type:	AC	**Prod. Type:**	1240M	**Elec. Spec:**	12WGY292	**CD Diagram:**	
Enclosure:	TEFC	**Mfg Plant:**		**Mech. Spec:**	12H11	**Layout:**	
Frame:	324TS	**Mounting:**	F1	**Poles:**	02	**Created Date:**	05-06-2010
Base:	RG	**Rotation:**	R	**Insulation:**	F	**Eff. Date:**	06-25-2010
Leads:	9#8	**Literature:**		**Elec. Diagram:**		**Replaced By:**	

Nameplate NP2138L

CAT.NO.	EM4109T	**P/N**		**ENCLOSURE**	TEFC		
SPEC.	12H011Y292G1	**CC**	010A	**FRAME**	324TS	**S/N**	
HP	40	**CLASS**	F	**HZ**	60		
RPM	3530	**PH**	3	**DES**	B		
VOLT	230/460	**KVA-CODE**	G	**ODE BRG**	6311	**DE BRG**	6312
AMP	92/46	**USABLE AT 208V**					
RATING	40C AMB-CONT	**GREASE**	POLYREX EM				
NEMA-NOM-EFF	92.4	**PF**	88	**SER.F.**	1.15		
HTR-VOLTS		**HTR-AMPS**		**MAX. SPACE HEATER TEMP.**			

Performance Data at 460V, 60Hz, 40.0HP (Typical performance - Not guaranteed values)

General Characteristics			
Full Load Torque:	59.2 LB-FT	**Start Configuration:**	DOL
No-Load Current:	13.7 Amps	**Break-Down Torque:**	230.0 LB-FT
Line-line Res. @ 25°C.:	0.15743 Ohms A Ph / 0.0 Ohms B Ph	**Pull-Up Torque:**	78.7 LB-FT
Temp. Rise @ Rated Load:	65 C	**Locked-Rotor Torque:**	108.0 LB-FT
Temp. Rise @ S.F. Load:	78 C	**Starting Current:**	305.0 Amps

Load Characteristics							
% of Rated Load	**25**	**50**	**75**	**100**	**125**	**150**	**S.F.**
Power Factor:	61.0	79.0	86.0	88.0	89.0	89.0	89.0
Efficiency:	87.1	91.6	92.6	92.6	92.1	91.3	92.3
Speed:	3585.4	3571.9	3557.9	3543.1	3526.6	3509.7	3533.0
Line Amperes:	18.0	26.1	35.6	46.0	57.4	69.2	52.8

Performance Graph at 460V, 60Hz, 40.0HP Typical performance - Not guaranteed values

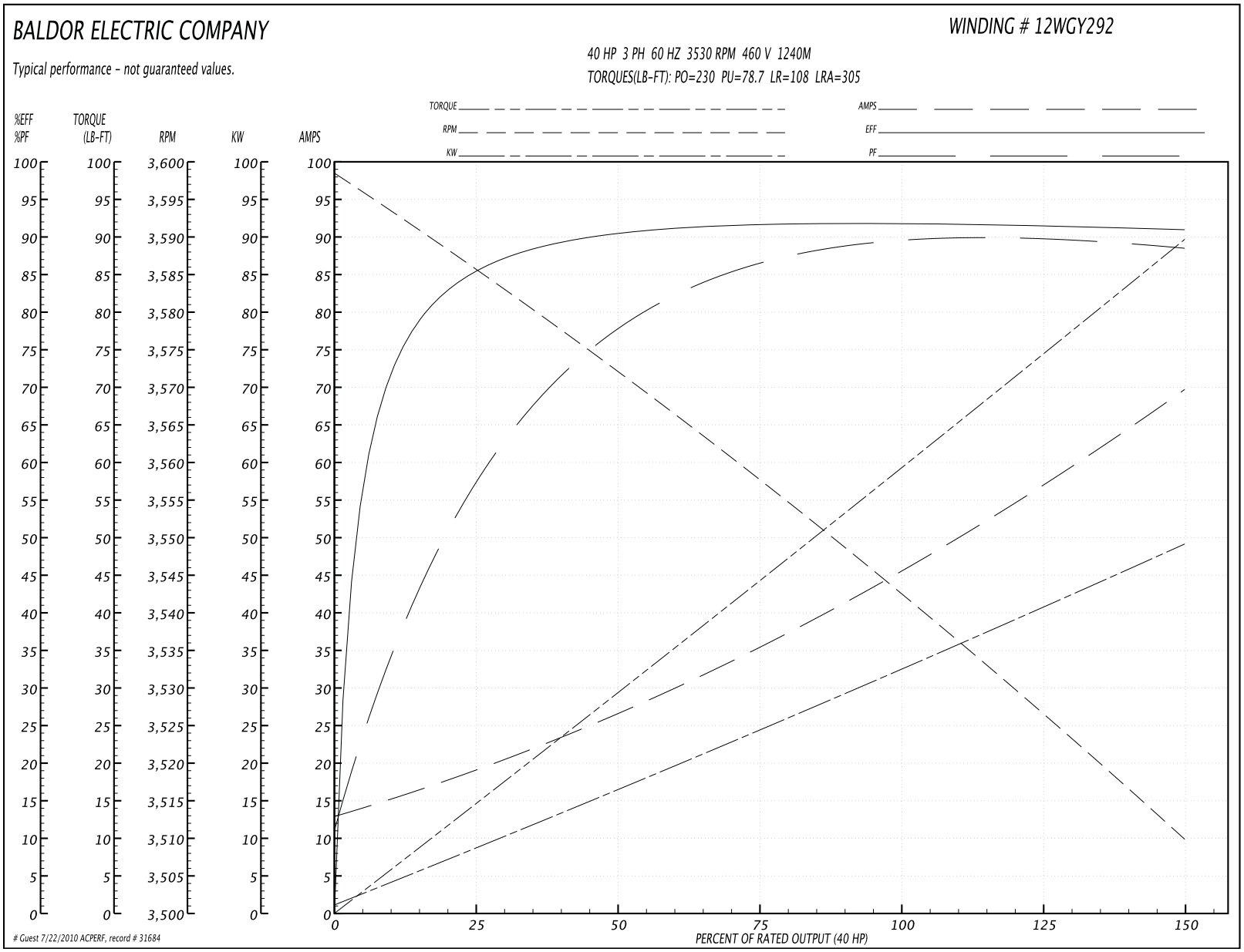

CD0180

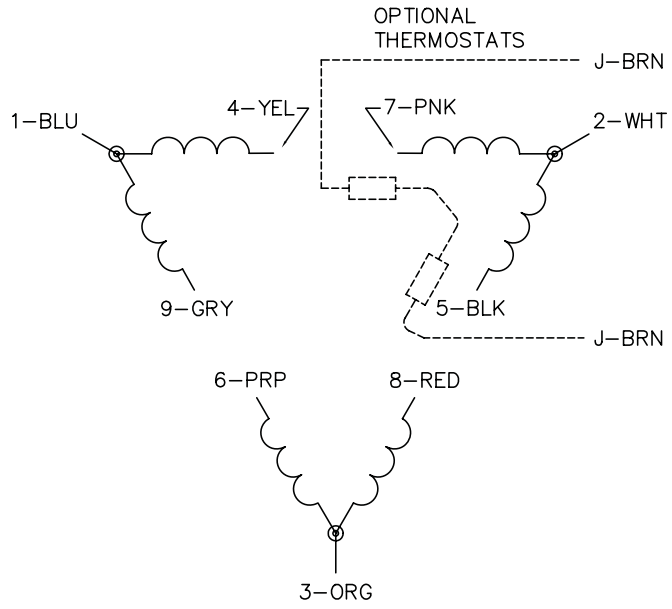

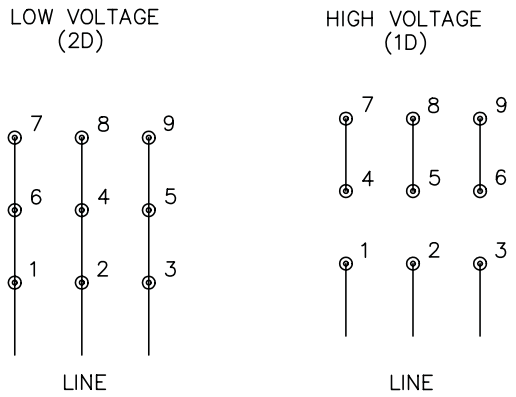

NOTES:

1. INTERCHANGE ANY TWO LINE LEADS TO REVERSE ROTATION.
2. OPTIONAL THERMOSTATS ARE PROVIDED WHEN SPECIFIED.
3. ACTUAL NUMBER OF INTERNAL PARALLEL CIRCUITS MAY BE A MULTIPLE OF THOSE SHOWN ABOVE.
4. LEAD COLORS ARE OPTIONAL. LEADS MUST ALWAYS BE NUMBERED AS SHOWN.

CD0180

REV. DESC: REVISE TO SHOW OPTIONAL COLORS			
REV. LTR: C	BY: JLP	REVISED: 01/21/99 2:28	TDR: 0171435
CD0180		FILE: AAA00005148	MDL: –
		MTL: –	

BALDOR ELECTRIC Co.

3PH, DV, 9 LEADS, DELTA CONNECTION

12LYH011

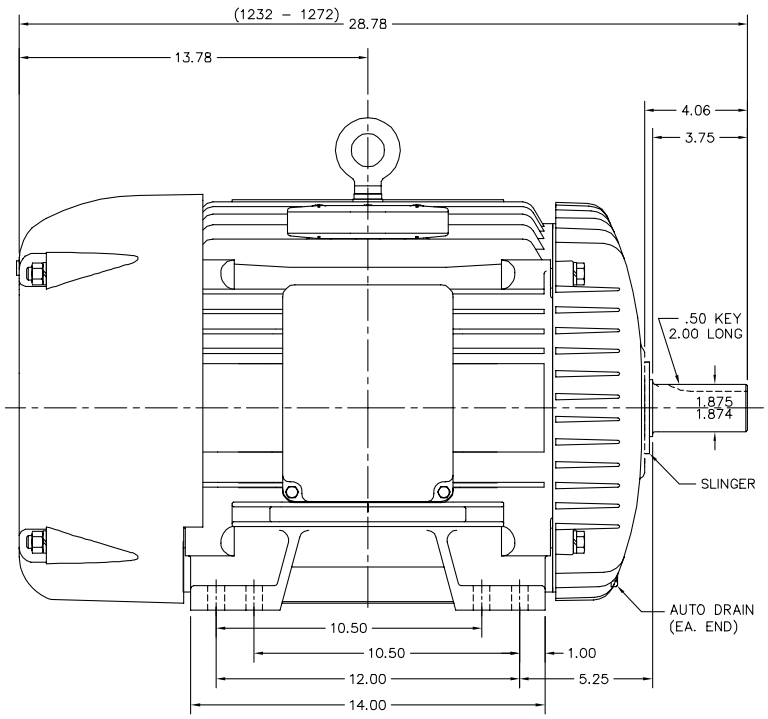

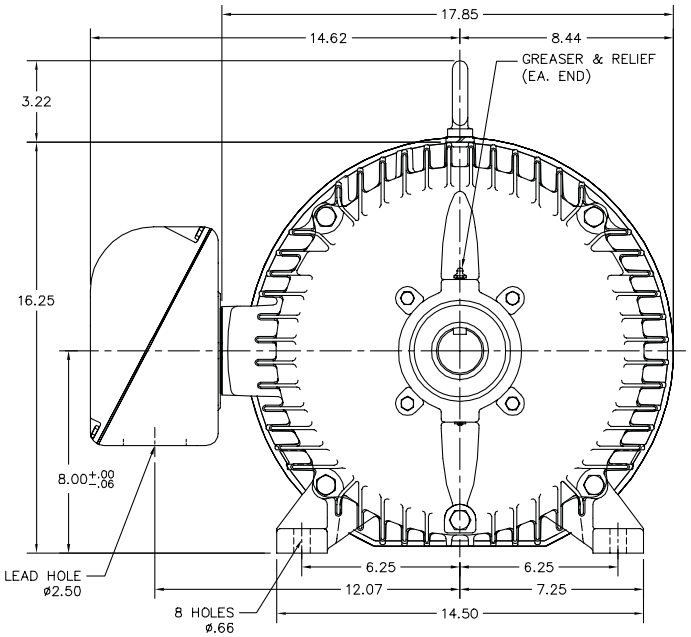

12LYH011

CUSTOMER IS RESPONSIBLE FOR DETERMINING THAT BALDOR'S PRODUCT WILL PERFORM SUITABLY IN THE INTENDED APPLICATION.

REV. DESC: REPLACED 12SF1109A01 WITH A18			BALDOR • DODGE • RELIANCE
REV. LTR: E	VERSION: 01	TDR: 000000498642	
FILE: \AAA\00035\138	REVISED: 01:30:48 05/01/2009	BY: ENGAMG0	STD HORZ TEFC 324-6TS
MTL: –			SH 1 of 1

RELIANCE ELECTRIC

Installation, Operation And Maintenance Of Reliance® Standard Industrial AC Induction Motors

- 180 – 449 Frames (NEMA)
- 112 – 280 Frames (IEC)

AC MOTORS

"Solutions You Can Trust"

Instruction Manual B-3620-25
December, 1998

Rockwell Automation

Table of Contents

RECEIVING AND HANDLING 1
ACCEPTANCE 1
EXTENDED STORAGE – AC MOTORS, DC MOTORS, GENERATORS AND SHIPBOARD MOTORS 1
STORAGE CONDITIONS – SHORT TERM 1
STORAGE PREPARATION 1
FOR STORAGE OF EXTENDED PERIODS OF TIME (GREATER THAN 18 MONTHS) 2
UNPACKING 2

INSTALLATION 3
INSPECTION 3
LOCATION 4
LIFTING MEANS 4
MOUNTING 4
MOUNTING OF 6 & 8 HOLE MOTOR FRAMES 4
DRIVE 4
ROTATING PARTS 5
SOME SATISFACTORY METHODS OF GUARDING 5
GROUNDING 5
STARTING 6
DRAIN PLUGS 6
ROTATION 6
TEST FOR GENERAL CONDITION 6
INITIAL LUBRICATION 6

OPERATION 7

MAINTENANCE AND REPAIR 9
DISASSEMBLY 9
REMOVING BRACKETS AND ROTOR 9
REMOVING AND REPLACING BALL BEARINGS 9
REASSEMBLY 9

LUBRICATION OF BEARINGS 10
GREASE LUBRICATED BEARINGS 10
RECOMMENDED LUBRICANT 10
BALL BEARING MOTORS 10
ROLLER BEARING MOTORS 10
LUBRICATION PROCEDURE 10
LUBRICATION INSTRUCTIONS 10
SERVICE CONDITIONS 11
LUBRICATION FREQUENCY 11
LUBRICATION VOLUME 11

REPLACEMENT BEARINGS 11

GENERAL CROSS SECTION AND PARTS IDENTIFICATION DRAWING 11

TOTAL SERVICE PROGRAMS 12
RENEWAL PARTS 12
ADDITIONAL LITERATURE 12

©1999 Rockwell International Corporation

⚠ DANGER

ONLY QUALIFIED ELECTRICAL PERSONNEL FAMILIAR WITH THE CONSTRUCTION AND OPERATION OF THIS EQUIPMENT AND THE HAZARDS INVOLVED SHOULD INSTALL, ADJUST, OPERATE, AND/OR SERVICE THIS EQUIPMENT. READ AND UNDERSTAND THIS MANUAL IN ITS ENTIRETY BEFORE PROCEEDING. FAILURE TO OBSERVE THIS PRECAUTION COULD RESULT IN SEVERE BODILY INJURY OR LOSS OF LIFE.

The products described in this manual are manufactured by or for Reliance Electric Industrial Company.

RECEIVING AND HANDLING

ACCEPTANCE

Thoroughly inspect the equipment before accepting shipment from the transportation company. If any of the goods called for in the bill of lading or express receipt are damaged or the quantity is short, do not accept them until the freight or express agent makes an appropriate notation on your freight bill or express receipt. If any concealed loss or damage is discovered later, notify your freight or express agent at once and request him to make an inspection. We will be very happy to assist you in collecting claims for loss or damage in shipment; however, this willingness on our part does not remove the transportation company's responsibility in reimbursing you for collection of claims or replacement of material. Claims for loss or damage in shipment must not be deducted from the Reliance Electric invoice,nor should payment of the Reliance Electric invoice be withheld awaiting adjustment of such claims, as the carrier guarantees safe delivery.

If considerable damage has been incurred and the situation is urgent, contact the nearest Reliance Electric Sales Office for assistance. Please keep a written record of all communications.

EXTENDED STORAGE – AC MOTORS

If considerable damage has been incurred and the situation is urgent, contact the nearest Reliance Electric Sales Office for assistance. Please keep a written record of all communications.

STORAGE CONDITIONS – SHORT TERM

The following storage requirements must be followed:

1. Motors are to be kept in their original containers or provided with equivalent protection and stored in a warehouse free from extremes in temperature, humidity, and corrosive atmosphere.
2. If unusual vibrations exist at the storage location, the motor should be protected with isolation pads.
3. All breathers and drains are to be operable while in storage and/or the moisture drain plugs removed. The motors must be stored so the drain is at the lowest point.

STORAGE PREPARATION

Improper storage of electric machines will result in seriously reduced reliability of that equipment. For example, an electric motor that does not experience regular usage while being exposed to normally humid atmospheric conditions is likely to cause the bearings to rust or rust particles from surrounding surfaces to contaminate the bearings. The electrical insulation may absorb an excessive amount of moisture leading to the motor winding failing to ground. The following preparations should be followed:

1. Minimize condensation in and around the motor by use of desiccants or other humidity control methods.
2. Motor space heaters when specified are to be energized where there is a possibility that the storage ambient conditions will reach the dew point. Space heaters are an option.
3. Coat all external machined surfaces with a material to prevent corrosion. An acceptable product for this purpose is Exxon Rust Ban #392.
4. Measure and record the electrical resistance of the winding insulation with a megger or an insulation resistance meter. Minimum accepted Megohm level is the insulation kV rating +1 Megohm. If levels fall below the above, contact the nearest Reliance sales office. The recorded data will be required when removing from storage.

5. Some motors have a shipping brace attached to the shaft to prevent damage during transportation. The shipping brace, if provided, must be removed and stored for future use. The brace must be reinstalled to hold the shaft firmly in place against the bearing before the motor is moved.

6. Upon placing the motor into extended storage (greater than 3 months), the motors with regreasable bearings must be greased per Table 1 followed by the motor shaft being rotated a minimum of 15 times after greasing. Non-regreasable motors with "Do Not Lubricate" nameplate should also be rotated 15 times to redistribute grease within the bearing.

7. Remove the grease drain plug, if supplied, (opposite the grease fitting) on the bottom of each end bracket prior to lubricating the motor. Replace the plug after greasing.

Table 1. Lubrication Volume (Storage)

NEMA Frame Size (IEC)	Vol. in Cubic In. (Cm^3)
182 thru 215 (112 – 132)	0.5 (8)
254 thru 286 (160 – 180)	1.0 16)
324 thru 365 (200 – 225)	1.5 (24)
404 thru 449 (250 – 280)	2.5 (40)

8. Regreasable bearings are to be greased per Table 1 at the time of being placed into extended storage. Motor shafts are to be rotated at least 15 revolutions manually every 3 months and additional grease added every nine months per Table 1 to each bearing. Bearings are to be greased at the time of removal from storage.

   Non-regreasable motors should have their shaft rotated 15 revolutions every 3 months.

9. All breather drains should be fully operable while in storage. The motors must be stored so the drain is at the lowest point. All breathers and automatic "T" drains must be operable to allow breathing at points other than through the bearing fits.

10. The space heaters when specified are to be connected and operable while in storage.

11. Windings are to be meggered at the time equipment is put in storage. Reference Para. 4 on page 1. At the time of removal from storage, the insulation resistance reading must not have dropped more than 50% from the initial reading. Any drop below this point necessitates electrical or mechanical drying. Refer to "Motor Drying Procedure."

12. Where motors are not stored in the original containers, but are removed and mounted on other pieces of machinery, the mounting must be such that the drains and breathers and space heaters are fully operable. In this respect, the drains must be kept at the lowest point in the motor so that all condensation can automatically drain out.

FOR STORAGE OF EXTENDED PERIODS OF TIME (GREATER THAN 18 MONTHS)

All requirements of general preparation and short term storage apply with the following additional requirements.

1. Motor is to be crated in a box similar to EXPORT BOXING but that the "shell" (sides & top of box) will be LAG-BOLTED to the wooden base (not nailed as export boxes are). This design will allow for the opening and reclosing the box many times without destroying the "shell".

2. The motor will be sealed in an airtight vapor barrier bag with desiccant inside. This airtight bag will give added protection during shipment of motor to the permanent storage area.

3. After the first "Inspection" for megger reading, turning the shaft, etc., the vapor bag should be re-sealed by taping it closed with masking or similar tape. Also add new desiccant inside bag before closing. The shell should then be placed over the motor and the lag bolts replaced.

4. If a "zipper-closing" type bag is used instead of the "heat-sealed" type bag, then rezipper the bag closed instead of taping it.

5. Be sure to add new desiccant inside bag after each periodic inspection.

6. Minimize the accumulation of condensed water in and around the machine.

UNPACKING

After unpacking and inspection to see that all parts are in good condition, turn the shaft by hand to be sure there are no obstructions to free rotation. Equipment which has been in storage for some time should be tested and relubricated (regreasable type) prior to being put into service. Refer to "Test General Condition" and "Lubrication" for procedure to be performed after extended storage.

Equipment with roller bearings is shipped with a shaft block. After removing the shaft block, be sure to replace any bolts used to hold the shaft block in place during shipment that are required in service.

⚠ DANGER

ONLY QUALIFIED ELECTRICAL PERSONNEL FAMILIAR WITH THE CONSTRUCTION AND OPERATION OF THIS EQUIPMENT AND THE HAZARDS INVOLVED SHOULD INSTALL, ADJUST, OPERATE, AND/OR SERVICE THIS EQUIPMENT. READ AND UNDERSTAND THIS MANUAL IN ITS ENTIRETY BEFORE PROCEEDING. FAILURE TO OBSERVE THIS PRECAUTION COULD RESULT IN SEVERE BODILY INJURY OR LOSS OF LIFE.

INSTALLATION

INSPECTION

After the motor is unpacked, examine the nameplate data to see that it agrees with the power circuit to which it is to be connected. The motor will operate with frequency not more than 5% and voltage not more than 10% above or below the nameplate data, or combined variation of voltage and frequency of not more than 10% above or below nameplate data. Efficiency, power factor and current may vary from nameplate data. Performance within these voltage and frequency variations will not necessarily be in accordance with the standards established for operation at rated voltage and frequency.

Typical Effect of Voltage and Frequency Variation on Induction Motor Characteristics

Variation	Starting and maximum running torque	Synchronous speed	slip %	Full-Load Speed	Efficiency			Power Factor/COS⊖			Full-load current	Starting currentt	Temp rise, full load	Maximum overload capacity	Magnetic noise – no-load in particular
					Full-load	3/4 load	1/2 load	Full load	3/4 load	1/2 load					
Voltage Variation:															
120% Voltage	increase 44%	no change	decrease 30%	increase 1.5%	6-0% decrease (1-75 HP) 0-.3% increase (100-300 HP)	decrease 1/2-2 points	decrease 7-20 points	decrease 5-15 points	decrease 10-30 points	decrease 15-40 points	increase 12%	increase 20%	increase 5-6°C. (1-75 HP) Decrease 3-4°C (100-300 HP)	increase 44%	Noticeable Increase
110% voltage	increase 21%	no change	decrease 17%	increase 1%	slight decrease	practically no change	decrease 1-2 points	decrease 5-10 points	decrease 5 points	decrease 5-6 points	increase 2-4%	increase 10-12%	increase 3-4°C.	increase 21%	increase slightly
Function of Voltage	$(\text{voltage})^2$	constant	$\frac{1}{(\text{voltage})\ 2}$	(synchronous speed slip)								voltage		$(\text{voltage})^2$	
90% Voltage	decrease 19%	no change	increase 23%	decrease 1-1/2%	decrease 2 points	practically no change	increase 1-2 points	increase 5 points	increase 2-3 points	increase 4-5 points	increase 10-11%	decrease 10-12%	increase 6-7°C	decrease 19%	decrease slightly
Frequency variation:															
105% frequency	decrease 10%	Increase 5%	practically no change	increase 5%	slight increase	slight increase	slight increase	slight increase	slight increase	slight increase	decrease slightly	decrease 5-6%	decrease slightly	decrease slightly	decrease slightly
Function of frequency	$\frac{1}{(\text{frequency})^2}$	frequency		(synchronous speed slip)								$\frac{1}{\text{frequency}}$			
95% frequency	increase 11%	decrease 5%	practically no change	decrease 5%	slight decrease	slight decrease	slight decrease	slight decrease	slight decrease	slight decrease	increase slightly	increase 5-8%	increase slightly	increase slightly	increase slightly
1 % phase unbalance	slight decrease	slight decrease		slight decrease	2% decrease			5-6% decrease			1-1/2% increase	slight decrease	2% increase		
2% phase unbalance	slight decrease	slight decrease		slight decrease	8% decrease			7% decrease			3% increase	slight decrease	8% increase		

NOTE: This table shows general effects, which will vary somewhat for specific ratings.

LOCATION

The motor should be installed in a location compatible with the motor enclosure and specific ambient.

To allow adequate air flow, the following clearances must be maintained between the motor and any obstruction:

TEFC (IC0141) Enclosures	–	
Fan Cover Air Intake	– 180 – 210T Frame	1"
	250 – 449T Frame	4"
	IEC 112 – 132	2.5 cm
	IEC 160 – 280	10 cm
Exhaust	– Envelope equal to the "P" dimension on the motor dimension sheet	
Protected Enclosures	–	
Bracket Intake	– Same as TEFC	
Frame Exhaust	– Exhaust out the sides-envelope a minimum of the "P" dimension plus 2" (5cm). Exhaust out the end-same as intake.	

LIFTING MEANS

WARNING

WHEN A LIFTING MEANS IS PROVIDED FOR HANDLING THE MOTOR, IT SHOULD NOT BE USED TO LIFT THE MOTOR PLUS ADDITIONAL EQUIPMENT SUCH AS GEARS, PUMPS, COMPRESSORS, OR OTHER DRIVEN EQUIPMENT. FAILURE TO FOLLOW THESE PRECAUTIONS COULD RESULT IN BODILY INJURY.

In the case of assemblies on a common base, any lifting means provided on the motor or generator should not be used to lift the assembly and base but, rather, the assembly should be lifted by a sling around the base or by other lifting means provided on the base. In all cases care should be taken to assure lifting in the direction intended in the design of the lifting means. Likewise, precautions should be taken to prevent hazardous overloads due to deceleration, acceleration or shock forces.

MOUNTING

Mount the motor on a foundation sufficiently rigid to prevent excessive vibration. Roller bearing and ball-bearing motors may be mounted with the shaft at any angle. Roller bearing motors are not suitable for coupled duty applications. After carefully aligning the motor with the driven unit, bolt securely in place.

When motors, which are normally mounted with the shaft in a horizontal position, are mounted vertically, it may be necessary to provide additional guards to prevent foreign objects from falling into the motor openings and striking rotating parts. Such guards may be obtained at the time of purchase or from a local service repair center.

Explosion proof motors are shipped from the factory with the conduit box mounted. If the conduit box is removed or rotated, a minimum of five (5) full threads of engagement on the motor pipe nipple must be maintained for explosion proof integrity of the conduit box.

Some motors have standardized frames containing 6 or 8 mounting holes. 6 hole frames are not suitable for field reversal of mounting from F-1 to F-2, etc. The following diagram indicates the proper mounting holes to use.

MOUNTING OF 6 & 8 HOLE MOTOR FRAMES

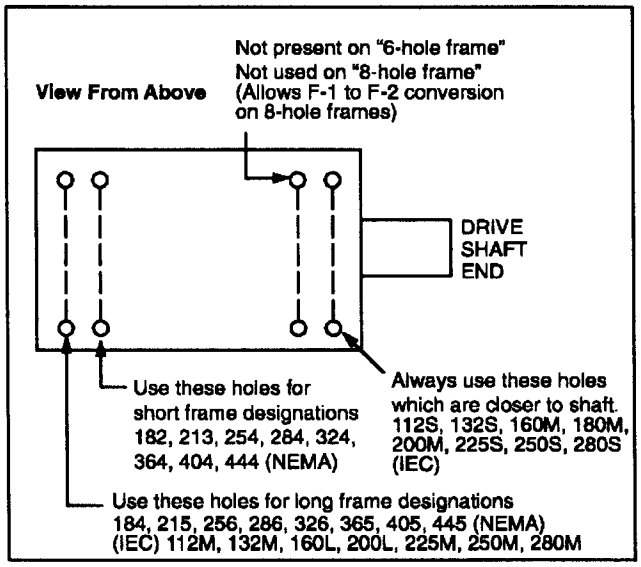

DRIVE

The pulley, sprocket, or gear used in the drive should be located on the shaft as close to the shaft shoulder as possible. Heat to install. Driving a unit on the shaft will damage the bearings.

Belt Drive: Align the pulleys so that the belt will run true; tighten the belt just enough to prevent slippage, any tighter will cause premature bearing failure. If possible, the lower side of the belt should be the driving side.

Chain Drive: Mount the sprocket on the shaft as close to the bracket as possible. Align the sprockets so that the chain will run true. Avoid excessive chain tension.

Gear Drive and Direct Connection: Accurate alignment is essential. Secure the motor and driven unit rigidly to the base.

ROTATING PARTS

⚠ WARNING

ROTATING PARTS, SUCH AS COUPLINGS, PULLEYS, EXTERNAL FANS, AND UNUSED SHAFT EXTENSIONS, SHOULD BE PERMANENTLY GUARDED AGAINST ACCIDENTAL CONTACT WITH HANDS OR CLOTHING. THIS IS PARTICULARLY IMPORTANT WHERE THE PARTS HAVE SURFACE IRREGULARITIES SUCH AS KEYS, KEYWAYS OR SET SCREWS. FAILURE TO OBSERVE THIS PRECAUTION COULD RESULT IN BODILY INJURY.

SOME SATISFACTORY METHODS OF GUARDING ARE:

1. Covering the machine and associated rotating parts with structural or decorative parts of the driven equipment.
2. Providing covers for the rotating parts. Covers should be sufficiently rigid to maintain adequate guarding in normal service.

⚠ DANGER

THE USER IS RESPONSIBLE FOR CONFORMING WITH THE NATIONAL ELECTRICAL CODE AND ALL OTHER APPLICABLE LOCAL CODES. WIRING PRACTICES, GROUNDING DISCONNECTS AND OVERCURRENT PROTECTION ARE OF PARTICULAR IMPORTANCE. FAILURE TO OBSERVE THESE PRECAUTIONS COULD RESULT IN SEVERE BODILY INJURY OR LOSS OF LIFE.

⚠ DANGER

SUBSEQUENT STEPS REQUIRE ROTATING PARTS AND/OR ELECTRICAL CIRCUITS TO BE EXPOSED. STAY CLEAR IF UNIT MUST BE RUNNING OR DISCONNECT AND LOCKOUT OR TAG POWER SOURCE IF CONTACT MUST BE MADE.

Connect the motor to the power supply according to the diagram on the motor nameplate. For most 230/460 volt motors, nine leads are brought out from the stator windings so that the motor may be connected for either 230 or 460 volts.

GROUNDING

In the USA consult the *National Electrical Code*, Article 430 for information on grounding of motors, Article 445 for grounding of generators, and Article 250 for general information on grounding. In making the ground connection, the installer should make certain that there is a solid and permanent metallic connection between the ground point, the motor or generator terminal housing, and the motor or generator frame. In non-USA locations consult the appropriate national or local code applicable.

Motors with resilient cushion rings usually must be provided with a bonding conductor across the resilient member. Some motors are supplied with the bonding conductor on the concealed side of the cushion ring to protect the bond from damage. Motors with bonded cushion rings should usually be grounded at the time of installation in accordance with the above recommendations for making ground connections. When motors with bonded cushion rings are used in multimotor installations employing group fusing or group protection, the bonding of the cushion ring should be checked to determine that it is adequate for the rating of the branch circuit overcurrent protective device being used.

There are applications where grounding the exterior parts of a motor or generator may result in greater hazard by increasing the possibility of a person in the area simultaneously contacting ground and some other nearby live electrical parts of other ungrounded electrical equipment. In portable equipment it is difficult to be sure that a positive ground connection is maintained as the equipment is moved, and providing a grounding conductor may lead to a false sense of security.

The user must select a motor starter and overcurrent protection suitable for this motor and its application. Consult motor starter application data as well as the National Electric Code and/or other applicable local codes.

⚠ DANGER

WHEN CAREFUL CONSIDERATION OF THE HAZARDS INVOLVED IN A PARTICULAR APPLICATION INDICATE THE MACHINE FRAMES SHOULD NOT BE GROUNDED OR WHEN UNUSUAL OPERATING CONDITIONS DICTATE THAT A GROUNDED FRAME CANNOT BE USED, THE INSTALLER SHOULD MAKE SURE THE MACHINE IS PERMANENTLY AND EFFECTIVELY INSULATED FROM GROUND. IN THOSE INSTALLATIONS WHERE THE MACHINE FRAME IS INSULATED FROM GROUND, IT IS RECOMMENDED THAT APPROPRIATE WARNING LABELS OR SIGNS BE PLACED ON OR IN THE AREA OF THE EQUIPMENT BY THE INSTALLER. FAILURE TO OBSERVE THESE PRECAUTIONS COULD RESULT IN SEVERE BODILY INJURY OR LOSS OF LIFE.

STARTING

⚠ WARNING

BEFORE STARTING MOTOR, REMOVE ALL UNUSED SHAFT KEYS AND LOOSE ROTATING PARTS TO PREVENT THEM FROM FLYING OFF. FAILURE TO OBSERVE THIS PRECAUTION COULD RESULT IN BODILY INJURY.

⚠ CAUTION

Check direction of motor rotation before coupling motor to load. Failure to observe this precaution could result in damage to or destruction of the equipment.

Before starting the motor, check the following items:

1. The rotor should turn freely when disconnected from the load.
2. Driven machine should be unloaded when first starting the motor.

The motor should run smoothly with little noise. If the motor should fail to start and produces a decided hum, it may be that the load is too great for the motor or that it has been connected improperly. Shutdown immediately and investigate for trouble.

DRAIN PLUGS

If motor is totally enclosed fan-cooled or non-ventilated it is recommended that condensation drain plugs, if present, be removed. These are located in the lower portion of the end-shields. Totally enclosed fan-cooled "XT" motors are normally equipped with automatic drains which may be left in place as received.

ROTATION

To reverse the direction of rotation, disconnect from power source and interchange any two of the three line leads for the three-phase motors.

TEST FOR GENERAL CONDITION

If the motor has been in storage for an extensive period or has been subjected to adverse moisture conditions, it is best to check the insulation resistance of the stator winding with a megohmeter.

If the resistance is lower than one megohm the windings should be dried in one of the two following ways:

1. Bake in oven at temperatures not exceeding 90°C. until insulation resistance becomes constant.
2. With rotor locked, apply low voltage and gradually increase current through windings until temperature measured with thermometer reaches 194°F (90°C). Do not exceed this temperature.

INITIAL LUBRICATION

Reliance motors are shipped from the factory with the bearings properly packed with grease and ready to operate. Where the unit has been subjected to extended storage (6 months or more) the bearings should be relubricated (regreasable type) prior to starting. When motors are equipped for oil mist lubrication refer to Instruction Manual B-3654.

OPERATION

⚠ WARNING

SURFACE TEMPERATURES OF MOTOR ENCLOSURE MAY REACH TEMPERATURES WHICH CAN CAUSE DISCOMFORT OR INJURY TO PERSONNEL ACCIDENTALLY COMING INTO CONTACT WITH HOT SURFACES. WHEN INSTALLING, PROTECTION SHOULD BE PROVIDED BY USER TO PROTECT AGAINST ACCIDENTAL CONTACT WITH HOT SURFACE. FAILURE TO OBSERVE THIS PRECAUTION COULD RESULT IN BODILY INJURY.

⚠ WARNING

ROTATING PARTS, SUCH AS COUPLINGS, PULLEYS, INTERNAL-EXTERNAL FANS AND UNUSED SHAFT EXTENSIONS SHOULD BE PERMANENTLY GUARDED AGAINST ACCIDENTAL CONTACT WITH HANDS OR CLOTHING. FAILURE TO OBSERVE THIS PRECAUTION COULD RESULT IN BODILY INJURY.

Due to the inherent characteristics of insulating materials, abnormally high temperatures shorten the operating life of electrical apparatus. The total temperature, not the temperature rise, should be the measure of safe operation. The class of insulation determines the maximum safe operating temperature. Aging of insulation occurs at an accelerated rate at abnormally high temperatures. A general rule for gauging the effect of excessive heat is that for each 10°C. rise in temperature above the maximum limit for the insulation, the life of the insulation is halved.

Unbalanced voltage or single-phase operation of polyphase machines may cause excessive heating and ultimate failure. It requires only a slight unbalance of voltage applied to a polyphase motor to cause large unbalance currents and resultant overheating.

Periodic checks of phase voltage, frequency and power consumption of a motor while in operation are recommended; such checks assure the correctness of frequency and voltage applied to the motor and yield an indication of the load offered by the apparatus which the motor drives.

Comparisons of this data with previous no-load and full-load power demands will give an indication of the performance of the complete machine. Any serious deviations should be investigated and corrected.

Stator troubles can usually be traced to one of the following causes:

Worn bearings	Operating single-phase
Moisture	Poor insulation
Overloading	Oil and dirt

Dust and dirt are usually contributing factors. Some forms of dust are highly conductive and contribute materially to insulation breakdown. The effect of dust on the motor temperature through restriction of ventilation is a principal reason for keeping the windings clean.

Squirrel-cage rotors are rugged and, in general, give little trouble. The first symptom of a defective rotor is lack of torque. This may cause a slowing down in speed accompanied by a growling noise or perhaps failure to start the load.

This is caused by an open or high resistance joint in the rotor bar circuit. Such a condition can generally be detected by looking for evidence of localized heating.

Motors with maximum surface temperatures listed on the nameplates.

ATTENTION

THE MOTOR IS DESIGNED TO OPERATE AT OR BELOW THE MAXIMUM SURFACE TEMPERATURE STATED ON THE NAMEPLATE. FAILURE TO OPERATE THE MOTOR PROPERLY CAN CAUSE THIS MAXIMUM SURFACE TEMPERATURE TO BE EXCEEDED. IF APPLIED IN A DIVISION 2 OR ZONE 2 ENVIRONMENT THIS EXCESSIVE TEMPERATURE MAY CAUSE IGNITION OF HAZARDOUS MATERIALS. OPERATING THE MOTOR AT ANY OF THE FOLLOWING CONDITIONS CAN CAUSE THE MARKED TEMPERATURE TO BE EXCEEDED.

1. **MOTOR LOAD EXCEEDING SERVICE FACTOR VALUE**
2. **AMBIENT TEMPERATURES ABOVE NAMEPLATE VALUE**
3. **VOLTAGES ABOVE OR BELOW NAMEPLATE VALUE**
4. **UNBALANCED VOLTAGES**
5. **LOSS OF PROPER VENTILATION**
6. **VARIABLE FREQUENCY OPERATION**
7. **ALTITUDE ABOVE 3000 FEET/1000 METERS**
8. **SEVERE DUTY CYCLES, REPEATED STARTS**
9. **MOTOR STALL**
10. **MOTOR REVERSING**
11. **SINGLE PHASE OPERATION**

Division 2 or Zone 2 motor swith space heaters.

ATTENTION

THE SPACE HEATERS ARE DESIGNED TO OPERATE AT OR BELOW THE MAXIMUM SURFACE TEMPERATURE STATED ON THE NAEMPLATE. IF THE MARKED AMBIENT AND/OR VOLTAGE ARE EXCEEDED THIS MAXIMUM SURFACE TEMPERATURE CAN BE EXCEEDED AND CAN DAMAGE THE MOTOR WINDINGS. IF APPLIED IN A DIVISION 2 OR ZONE 2 ENVIRONMENT THIS EXCESSIVE TEMPERATURE MAY CAUSE IGNITION OF HAZARDOUS MATERIALS.

MAINTENANCE AND REPAIR

⚠ WARNING

TO INSURE THAT THE DRIVEN EQUIPMENT IS NOT UNEXPECTEDLY STARTED, TURN OFF AND LOCKOUT OR TAG POWER SOURCE BEFORE PROCEEDING. FAILURE TO OBSERVE THIS PRECAUTION COULD RESULT IN BODILY INJURY

The fundamental principle of electrical maintenance is KEEP THE APPARATUS CLEAN AND DRY. This requires periodic inspection of the motor, the frequency depending upon the type of motor and the service.

The following should be checked at regular intervals:

⚠ WARNING

DO NOT USE GASOLINE OR OTHER FLAMMABLE SOLVENTS WHEN CLEANING THE MOTOR. FAILURE TO OBSERVE THIS PRECAUTION COULD RESULT IN BODILY INJURY.

1. Windings should be dry and free of dust, grease, oil, and dirt. Windings may be cleaned by suction cleaners or by wiping. Nozzles on suction type cleaners should be non-metallic. Gummy deposits of dirt and grease may be removed by using a commercially available low volatile solvent.
2. Terminal connections, assembly screws, bolts and nuts should be tight. They may loosen if motor is not securely bolted and tend to vibrate.
3. Insulation resistance of motors in service should be checked periodically at approximately the same temperature and humidity conditions to determine possible deterioration of the insulation. When such measurements at regular intervals indicate a wide variation, the cause should be determined. Motor should be reconditioned if the motor has been subjected to excessive moisture by re-winding or re-insulating if necessary. Enclosed motors require very little attention. Be sure that external air chamber of fan-cooled motors does not become clogged with foreign material which will restrict passage of air.

DISASSEMBLY

If it becomes necessary to disassemble the motor, care should be taken not to damage the stator windings as the insulation may be injured by improper or rough handling.

Precautions to keep bearings clean should be exercised. Before removing either end shield:

1. Disconnect motor from power source. Tag the leads to insure proper reconnection.
2. Remove motor from mounting base. Remove fan cover and fan if present.
3. Mark end brackets relative to position on frame so they can be easily replaced.

REMOVING BRACKETS AND ROTOR

4. Remove bearing cartridge nuts or screws. (If used)
5. Remove opposite drive end bracket bolts.
6. Pull bracket.
7. Remove drive end bracket in same manner.
8. Remove rotor.

REMOVING AND REPLACING BALL BEARINGS

BEARINGS SHOULD NOT BE REMOVED UNLESS THEY ARE TO BE REPLACED. WHEN REMOVAL IS NECESSARY, USE A BEARING PULLER. A BEARING PULLER MAY BE RIGGED BY USING A METAL PLATE, WITH HOLES DRILLED TO MATCH THE TAPPED HOLES IN THE INNER CAP. USE CARE TO KEEP THE PRESSURE EQUAL TO PREVENT BREAKING THE CAP.

TO INSTALL A BEARING, HEAT THE BEARING IN AN OVEN AT 250°F (121°C). THIS WILL EXPAND THE INNER RACE, ALLOWING IT TO SLIP OVER THE BEARING SEAT. ALL BEARINGS MUST BE REPLACED WITH THE IDENTICAL PART USED BY RELIANCE. IN MANY CASES SPECIAL BEARINGS ARE USED WHICH CANNOT BE IDENTIFIED BY MARKINGS ON BEARING. IN ALL CASES, WHEN REPLACING BEARINGS, USE MARKINGS ON BEARINGS AND MOTOR IDENTIFICATION NUMBER TO OBTAIN CORRECT REPLACEMENT BEARING.

THE MAJORITY OF BEARINGS USED NOW HAVE A C3 INTERNAL FIT.

REASSEMBLY

Follow reverse procedure as outlined for Disassembly. Having marked the brackets in the original position, replace as marked.

LUBRICATION OF BEARINGS

Motors covered by this Instruction Manual are equipped with several types of bearings. This description covers regreasable anti-friction bearings only. Non-regreasable ball bearings require no periodic maintenance. See I/M B-3654 for oil mist lubricated anti-friction bearing procedures.

GREASE LUBRICATED BEARINGS

This motor has been properly lubricated at the time of manufacture and it is not necessary to lubricate at time of installation unless the motor has been in storage for a period of six months or more.

Lubrication of anti-friction bearings should be done as a part of a planned maintenance schedule. The Recommended Lubrication Interval should be used as a guide to establish this schedule.

Cleanliness is important in lubrication. Any grease used to lubricate anti-friction bearings should be fresh and free from contamination. Similarly, care should be taken to properly clean the grease inlet area of the motor to prevent grease contamination.

RECOMMENDED LUBRICANT

For motors operating in ambient temperatures shown below, use the following lubricant or its equal:

BALL BEARING MOTORS

OPERATING TEMP. –25°C (–15°F) to 50°C (120°F)

CHEVRON OIL	SRI NO. 2
EXXON	UNIREX N2
SHELL OIL CO.	DOLIUM R
TEXACO, INC.	PREMIUM RB

MINIMUM STARTING TEMPERATURE –60°C (–76°F)

SHELL OIL CO.	AEROSHELL 7

ROLLER BEARING MOTORS

OPERATING TEMP.–25°C (–1 5°F) to 50°C (120°F)

CHEVRON OIL	BLACK PEARL EP NO. 2
TEXACO, INC.	PREMIUM RB

LUBRICATION PROCEDURE

Reliance regreaseable anti-friction bearings may be lubricated with the motor running or stationary. Stationary with the motor warm is preferred.

1. Locate the grease inlet, clean the area and replace the pipe plug with a grease fitting, if the motor is not equipped with grease fittings.
2. If motor is equipped with grease drain plug, remove plug and loosen any hardened grease that may block drain.
3. Add the Recommended Volume of the Recommended Lubricant using a hand operated grease gun.
4. Run the motor for two hours.
5. Replace the pipe plug in grease drain.
6. Grease may not relieve from drain. Use only volume shown in Table 3.

LUBRICATION INSTRUCTIONS

1. Select Service Condition from Table 1.
2. Select Lubrication Frequency from Table 2.
3. Select Lubrication Volume from Table 3.
4. Lubricate the motor at the required frequency with the required lubricant volume in accordance with LUBRICATION PROCEDURE.

NOTE: Mixing lubricants is not recommended due to possible incompatibility. If it is desired to change lubricant, follow instructions for lubrication and repeat lubrication a second time after 100 hours of service. Care must be taken to look for signs of lubricant incompatibility, such as extreme soupiness visible from the grease relief drain area, or from the shaft opening.

SERVICE CONDITIONS

Table 1

Standard Conditions	Eight hours per day, normal or light loading, clean @ 40°C (100°F) maximum ambient.
Severe Conditions	Twenty-four hour per day operation or shock loading, vibration, or in dirt or dust @ 40–50°C (100–120°F) ambient
Extreme Conditions	Heavy shock or vibration, or dust.

LUBRICATION FREQUENCY

Table2

BALL BEARINGS				
Speed	**NEMA (IEC) Frame**	**Standard Conditions**	**Severe Conditions**	**Extreme Conditions**
1800 RPM and Slower	182 (112) Thru 215 (132)	3 Years	1 Year	6 Months
	254 (160) Thru 365 (200)	2 Years	6 to 12 Months	3 Months
	404 (225) Thru 449 (280)	1 Year	6 Months	1 to 3 Months
3600 RPM	ALL	6 Months	3 Months	1 Month
ROLLER BEARINGS				
For Roller Bearings divide the time periods above by 2.				

LUBRICATION VOLUME

Table3

NEMA (IEC) Frame Size	Volume In Cubic Inches (cm^3)
182 Thru 215 (112 – 132)	0.5 (8)
254 Thru 286 (160 – 180)	1.0 (16)
324 Thru 365 (200 – 225)	1.5 (24)
404 Thru 449 (250 – 280)	2.5 (40)

REPLACEMENT BEARINGS

Your maintenance program will not be complete without including spare bearings. It must be remembered that the bearing is a wearable component and therefore must eventually be replaced. To insure that you are able to maintain original operation, **we recommend the purchase of spares directly from Reliance Electric.**

All bearings used in Reliance motors are subject to exact specifications and tests necessary to satisfy performance requirements. In this manner, it is possible to duplicate your present bearing. Markings on the bearing do not indicate complete specifications.

CROSS SECTIONAL AND PARTS IDENTIFICATION DRAWING

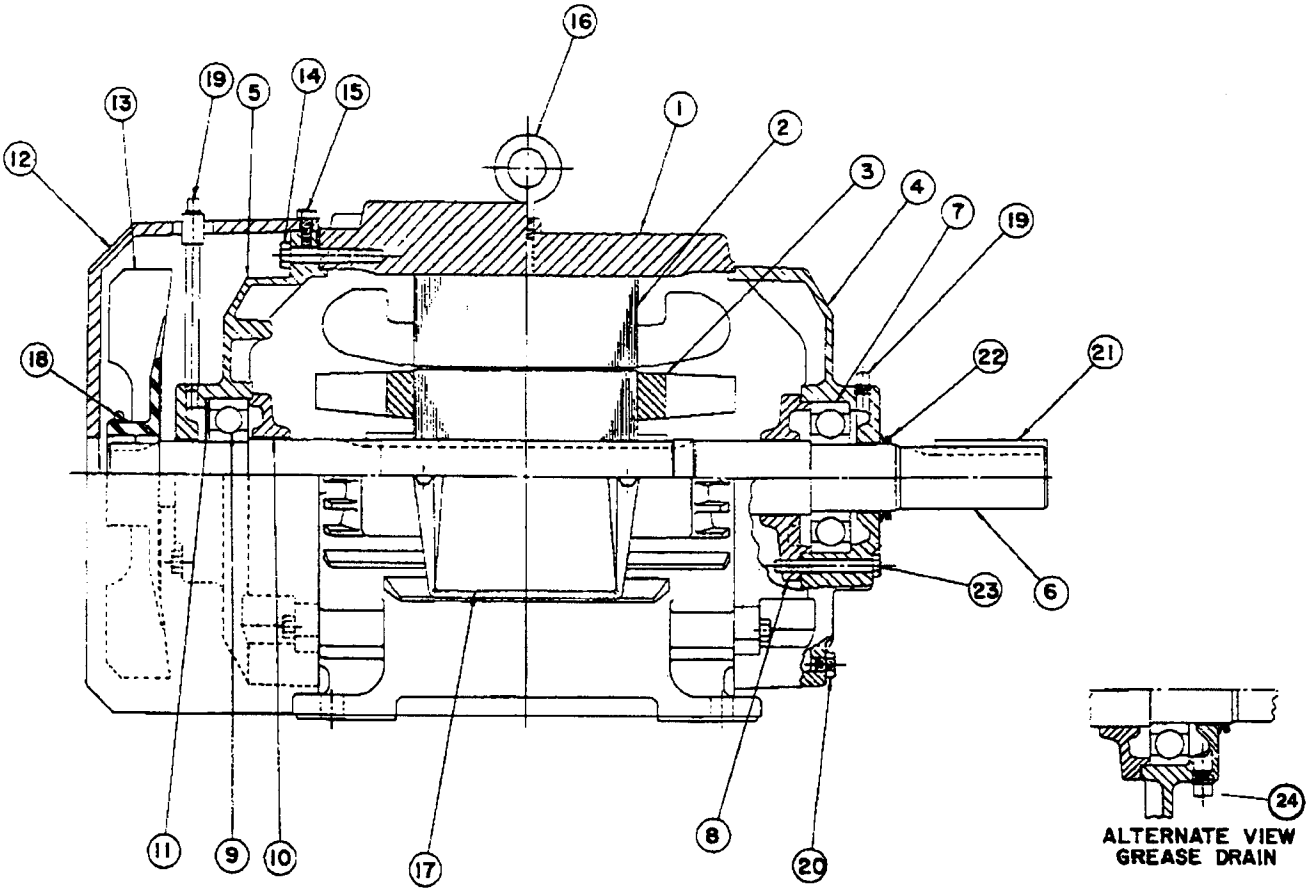

FIND NO.	PART DESCRIPTION
1	FRAME
2	STATOR
3	ROTOR/INTERNAL COOLING FAN
4	BACKEND BRACKET
5	FRONTEND BRACKET
6	SHAFT
7	BACKEND BALL BEARING
8	BACKEND INNER CAP
9	FRONTEND BALL BEARING
10	FRONTEND INNER CAP
11	WAVE WASHER, FRONTEND
12	FAN COVER
13	OUTER COOLING FAN

FIND NO.	PART DESCRIPTION
14	FRONT END BRACKET BOLTS
15	FAN COVER BOLTS
16	EYEBOLT
17	TERMINAL BOX
18	FAN CLAMP
19	GREASE ENTRY
20	CONDENSATION DRAIN
21	KEY
22	SLINGER
23	BACKEND CAP BOLTS
24	GREASE DRAIN

NOTE: Bearings shown are regreasable type. Not all items shown may be present on motor. Not all items on motor may be shown on drawing. Drawing is for general reference purposes only.

TOTAL SERVICE PROGRAMS

Reliance Electric can provide a wide range of maintenance programs to help you reduce downtime, improve productivity and increase profits. Capabilities include:

- Motor Start-Up Service
- Motor Electrical and Mechanical Preventive Maintenance
- Vibration Analysis
- Mobile Van Repair Service
- Balancing and Alignment Service
- Maintenance Schools
- 24-Hour Technical Support
- Modernization Service

For more information contact your local Reliance Electric Sales Office or write:

Attn: Motor Tech Support
Reliance Electric
Industrial Services
375 Alpha Drive
Highland Hts., Ohio 44143
USA

RENEWAL PARTS

An adequate stock of factory-made renewal parts is an integral part of a sound maintenance program to protect against costly downtime.

Parts can be obtained from your nearest Reliance Electric parts distributor, or directly from the Reliance Electric factory. When ordering parts for which a part number is not available, give complete description of part and purchase order number, serial number, model number, etc., of the equipment on which the part is used.

A detailed parts list, which gives Reliance Electric recommendations for spare parts that should be stocked for your equipment, can be ordered from:

1. Nearest Reliance Electric Sales Office
2. Nearest Reliance Electric Keyparts Distributor
3. Reliance Electric Renewal Parts, Cleveland, Ohio

Be sure to include complete nameplate data-purchase order number, serial number, rating, etc. – for your equipment when ordering the spare parts list.

For the telephone number (USA) of your local Keyparts Stocking distributor call 1-800-RELIANCE.

ADDITIONAL LITERATURE

Additional literature covering the maintenance of AC motors can be obtained from the Reliance Electric Services Division. Requests should be submitted through your nearest Reliance Electric Sales Office.

MOTOR PURCHASE RECORD

RELIANCE ELECTRIC
DUTY MASTER MOTORS

I.D. # _____ LOCAL ITEM# _____

HP/KW SPEED VOLT

P.O. #: Purchase Contact/Phone #

Date Purchased:

Comments on maintenance/maintenance log

Date	Item	Remarks	Initials

For additional information
6040 Ponders Court
Greenville, SC 29615 USA
Tel: (864) 297-4800
http://www.reliance.com/rpmac

Reach us now at www.rockwellautomation.com

Wherever you need us, Rockwell Automation brings together leading brands in industrial automation including Allen-Bradley controls, Reliance Electric power transmission products, Dodge mechanical power transmission components, and Rockwell Software. Rockwell Automation's unique, flexible approach to helping customers achieve a competitive advantage is supported by thousands of authorized partners, distributors and system integrators around the world.

Americas Headquarters, 1201 South Second Street, Milwaukee, WI 53204, USA, Tel: (1) 414 382-2000, Fax: (1) 414 382-4444
European Headquarters SA/NV, avenue Herrmann Debroux, 46, 1160 Brussels, Belgium, Tel: (32) 2 663 06 00, Fax: (32) 2 663 06 40
Asia Pacific Headquarters, 27/F Citicorp Centre, 18 Whitfield Road, Causeway Bay, Hong Kong, Tel: (852) 2887 4788, Fax: (852) 2508 1846

Rockwell Automation

Publication B-3620-25 – December 1998

©1999 Rockwell International Corporation. All rights reserved. Printed in USA

SECTION 4

ACCESSORIES

SPECIFICATIONS
IO&M MANUAL

COUPLING

REX OMEGA® COUPLINGS

NO OTHER COUPLING CAN OFFER ALL THESE FEATURES & BENEFITS

Features	Benefits
Split-In-Half Flex Element Design	Easy replacement without moving the hubs or connected equipment
Polyurethane Flex Element	No lubrication required, excellent chemical resistance
Torsionally Soft	Protects equipment by cushioning shock loads and torsional vibration
High Misalignment Capacity	Accommodates unavoidable misalignment with low reactionary forces
Visual Inspection	No need for coupling disassembly to inspect
Interchangeable Hubs	Standard and spacer coupling hubs are identical
Adjustable Spacer	One spacer coupling size can accommodate different shaft separations

Rex Omega Standard Coupling

Standard "close coupled" design available in 15 sizes covering applications up to 425,250 in-lbs torque and bores up to 9.00".

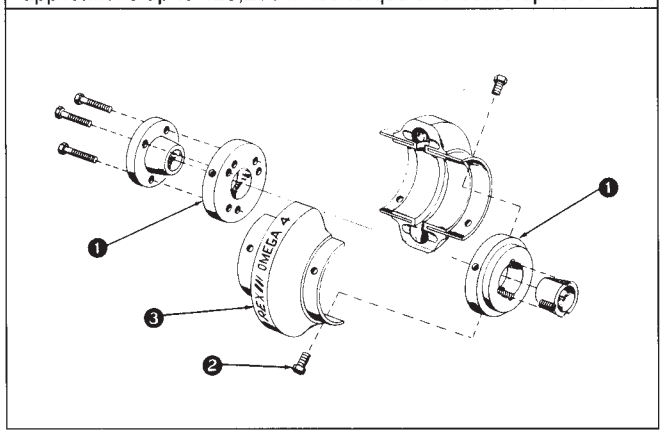

❶ **Reversible hubs are available from "stock" with rough bore, finished straight bore, or bored to accept compression bushings. Consult factory for tapered bores, splines and other special bore requirements.**

❷ **Premium grade capscrews with self-locking patches. Also available in stainless steel.**

❸ **Tough, two-piece urethane flex element transmits torque, accepts misalignment, reduces vibration and noise and is not seriously affected by petroleum products or most chemicals.**

Table of Contents

Installation and Misalignment Ratings E-3
Standard Close Coupled Design E-4,5
Spacer Design E-6,7,8
Extended Spacer Design E-9
Floating Shaft Design E-10,11
Mill Motor Design E-12
Special Designs E-13
Selection E-14,15,16
Bore Specifications and Finished Stock Bore Hubs E-17
Ordering E-18
Sales and Service Center Locations E-19

REX OMEGA® COUPLINGS

INSTALLATION...AS SIMPLE AS PEELING AN ORANGE

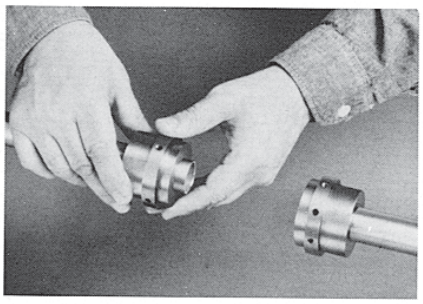

Mount one hub to shaft, leave other hub loose for adjustment of spacing.

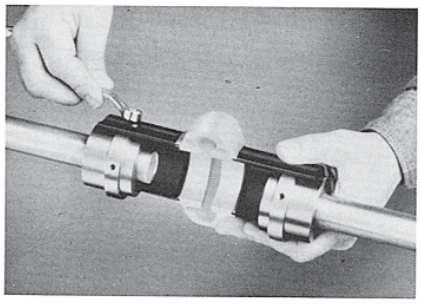

Place half of the Omega element around hubs and secure with self-locking capscrews. Omega element will space the other hub. Now secure the other hub.

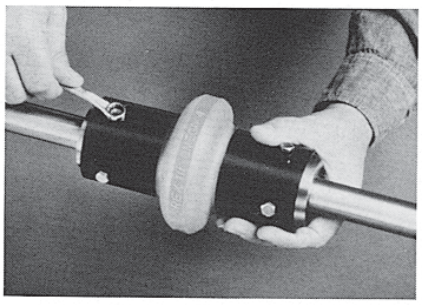

Mount other half of the Omega element. Tighten all capscrews to recommended torques below and you're done! Refer to the installation instructions for further details.

Tested Tough

Rigorous testing demonstrates that the Rex Omega coupling protects connected equipment from the damaging effects of misalignment, vibration, and gross overload. Where other coupling designs might allow equipment damage, the super flexible element of Rex Omega couplings minimizes the reactionary forces on equipment bearings under severe misalignment conditions and reduces the effects of excessive shock overloads.

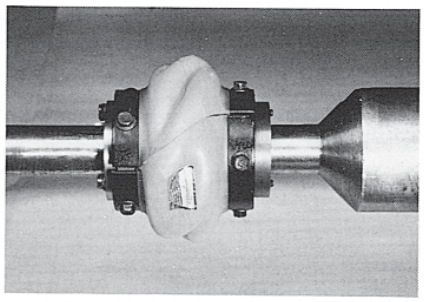

Severe static testing (5 x rating) shows element flexibility, rugged design, and positive adhesive bond to the metal shoes.

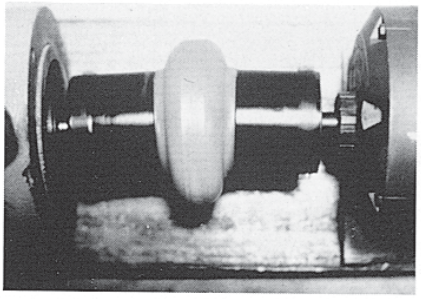

Demonstrates coupling's ability to accept severe misalignment.

Omega Coupling

Allowable Misalignment

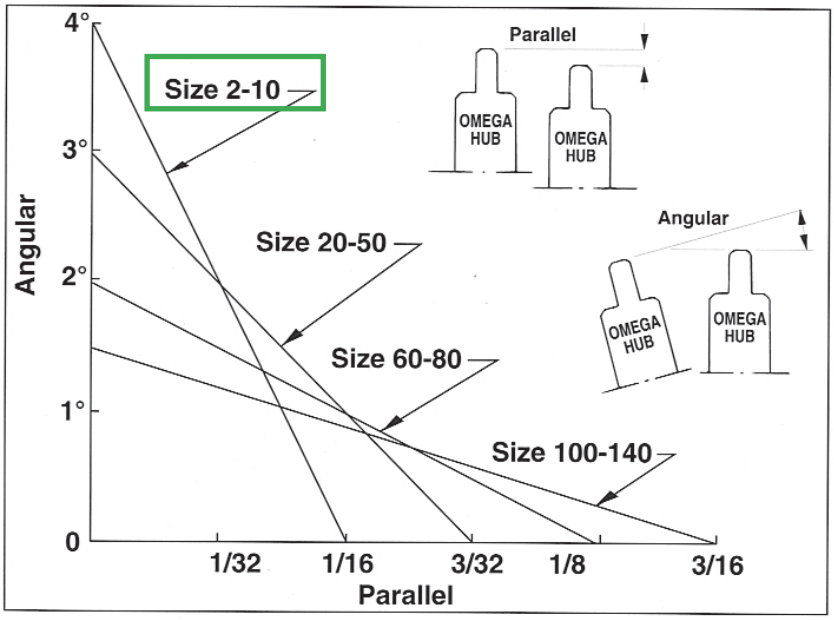

—IMPORTANT—
RECOMMENDED CAPSCREW TORQUE
FOR PROPER INSTALLATION

Cplg. Size	Torque — Dry	
	In. Lbs.	Ft. Lbs.
2 3 4 5 10	204	17
20 30 40 50	360	30
60 70 80	900	75
100 120	3240	270
140	7080	590

NOTE: Capscrews have self-locking patches which should not be reused more than twice. Capscrews can be further used if a thread locking adhesive is applied.

Do NOT Lubricate Capscrew Threads

Note:

Any combination of parallel and angular misalignment which falls under the triangle will not cause a premature fatigue failure of the flexible element in normal use.

Important Note:

Coupling alignment is directly related to smooth, efficient equipment operation. Care should be taken for best possible alignment.

OMEGA® STANDARD COUPLING
WITH STRAIGHT BORE HUBS

Rexnord

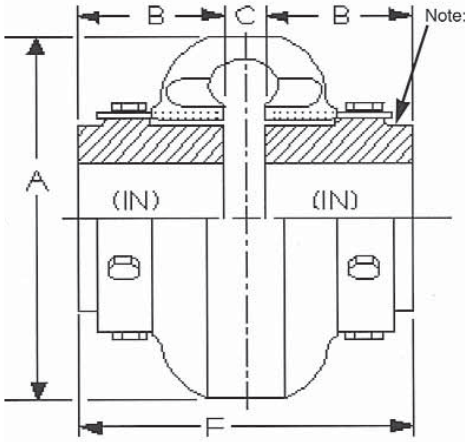

Note: Hub/shoulder design varies per coupling size. Consult Rexnord for specific size assembly drawings.

(Hubs Inboard)

Specification Data With Straight Bore Hubs

Standard Omega No.	Recom. Max. Bore (In.) ❶	HP/100 RPM ❷	Continuous Torque (In. Lbs.) ❷	Max. RPM	Dimensions In Inches							Weight (Lb.) ❸
					A	B	C		D	F		
							(In.)	(Out)		(In.)	(Out)	
E2	1.13	.30	190	7500	3.50	.94	1.34	1.90	1.85	3.22	3.78	1.2
E3	1.38	.58	365	7500	4.00	1.50	.81	1.31	2.32	3.81	4.31	2.4
E4	1.63	.88	550	7500	4.56	1.69	.44	1.31	2.60	3.81	4.69	3.0
E5	1.88	1.48	925	7500	5.38	1.75	.81	1.81	3.13	4.31	5.31	5.4
E10	2.13	2.30	1450	7500	6.38	1.88	.56	1.81	3.65	4.31	5.56	8.2
E20	2.38	3.65	2300	6600	7.25	2.06	.50	2.38	4.48	4.62	6.50	13.0
E30	2.88	5.79	3650	5800	8.25	2.31	.56	2.44	5.42	5.19	7.06	21.2
E40	3.38	8.85	5500	5000	9.50	2.50	.56	2.68	6.63	5.56	7.68	35
E50	3.63	12.14	7650	4200	11.00	2.75	.63	3.38	8.13	6.13	8.88	54
E60	4.00	19.84	12,500	3800	12.50	3.25	.69	3.44	8.75	7.19	9.94	72
E70	4.50	35.12	22,125	3600	14.00	3.62	.75	3.75	9.25	8.00	11.00	86
E80	6.00	62.70	39,500	2000	16.00	4.87	.75	5.00	11.25	10.50	14.75	170
E100	6.75	135	85,050	1900	21.00	5.50	1.75	3.75	14.13	12.75	14.75	244
E120	7.50	270	170,100	1800	25.00	6.00	2.25	4.88	17.63	14.24	16.88	425
E140	9.00	540	340,200	1500	30.00	7.00	3.00	5.00	20.88	17.00	19.00	746

❶ Standard hubs. See page E-16 for steel hub maximum bores.
❷ Service factor = 1.0
❸ With maximum bore standard hubs.

- **Split-In-Half Flex Element**
  Allows disassembly and replacement without disturbing hubs or connected equipment.

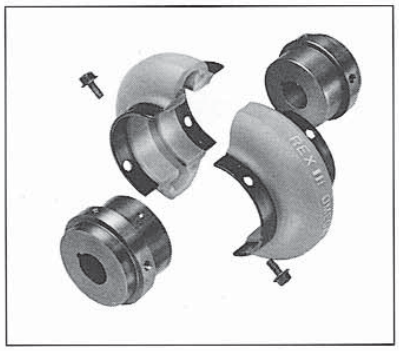

Straight Bore Hubs

Note: Dimensions subject to change. Certified drawings of ordered material furnished on request.

OMEGA COUPLING
INSTALLATION INSTRUCTIONS

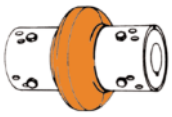

WARNING

- Because of the possible danger to person(s) or property from accidents which may result from improper use or installation of products, it is extremely important to follow the proper selection, installation, maintenance and operational procedures.
- All rotating power transmission products are potentially dangerous and can cause serious injury. They must be properly guarded in compliance with OSHA and A.N.S.I.standards for the speeds and applications in which they are used. It is the responsibility of the user to provide proper guarding.
- Failure to secure capscrews properly could cause coupling component(s) to become dislodged during operation; resulting in personal injury. Both “Inch” and “Metric” capscrew/hub designs are in service worldwide. Do not attempt to install “Inch” capscrews into a “Metric” hub or visa versa.
- Do not start motor or jog without the complete coupling being properly secured to driver and driven equipment shafts.
- Do not use on turbine drives if the coupling cannot be protected from steam leakage or from speeds in excess of the couplings published speed ratings.
- Do not use on applications such as elevators, man lifts, or devises that transfer people. When the coupling fails, the lift device or people mover could fall resulting in serious injury or death.
- Before installing this coupling on any system containing sleeve bearings, herringbone gear sets or other devices sensitive to axial thrust, consult Rexnord.
- It is the responsibility of the user to consider the coupling's stiffness (available from Rexnord) as it relates to the drive system frequency.

STEP 1

Inspect both driving and driven shafts and hub bores making sure they are free from dirt and burrs. Be sure they keys fit shafts properly. Mount both hubs to the shafts securing only one hub; the other hub should be loose for minor adjustment of spacing. Where tapered bushings are used, follow bushing manufacturer's instructions. If hub is bored for an interference fit, we recommend heating the hub in water, oil bath or an oven and quickly positioning it on the shaft. Do not spot heat hub as it may cause distortion.

STEP 2

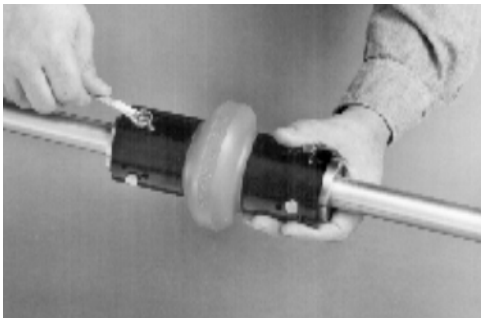

Place half of the elastomer element around hubs and secure with self-locking capscrews. The elastomer element will space the other hub. It is important to have capscrew properly tightened. See Table 1 below for recommended capscrew torques and instructions. Now secure the other hub to the shaft.

STEP 3

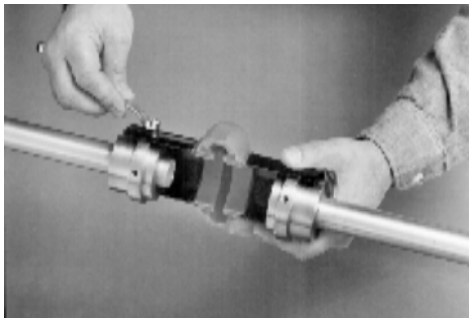

Mount other half of the elastomer element to hubs. Be sure to secure rings to the spacer element if provided. Tighten all capscrews to the recommended capscrew torques in Table 1 and your done!

Spacer coupling installation is shown; the same procedure applies for the standard design coupling.

HELPFUL HINT: If the capscrew holes in the element do not line up properly with the hubs due to equipment misalignment, rotate the shafts (if possible) slightly as you install each capscrew. On larger coupling sizes, first install the capscrews that are located in the center of the half element.

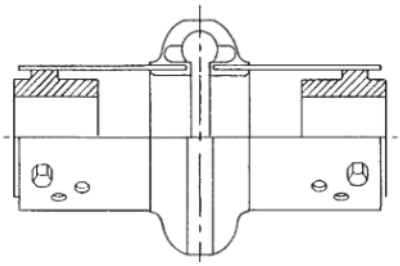

Optional Method
Both hubs mounted inward.

Additional mounting positions are possible with the optional assembly holes on the spacer element. Select the combination which most closely matches the dimension desired between shaft ends.

ALLOWABLE SHAFT ENGAGEMENTS

Shafts can be flush with the hub (not shown), recessed below the face of the hub, or extended beyond the hub face.

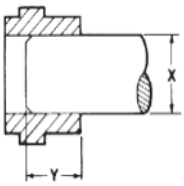

Dimension Y should be equal to, or greater than, .8 times dimension X. 100% shaft engagement is recomended for compression bushed hubs.

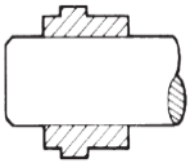

The shaft may extend beyond the hub, as long as there is sufficient keyway length available.

TABLE 1

RECOMMENDED CAPSCREW TORQUES FOR PROPER INSTALLATION	CPLG SIZE	TORQUE - DRY IN. LBS.	FT. LBS.	Nm
- IMPORTANT - Capscrews have self-locking patches which should *not* be reused more than twice. Capscrews can be further used with application of a thread-locking adhesive. *Do Not Lubricate Capscrew Threads*	2, 3, 4, 5, 10	204	17	23
	20, 30, 40, 50	360	30	40
	60, 70, 80	900	75	100
	100, 120	3240	270	370
	140	7080	590	800

EQUIPMENT ALIGNMENT

Coupling alignment is directly related to equipment and coupling life.

Although Omega couplings can withstand gross misalignment, care should be taken for best possible alignment to assure optimum performance. The caliper/straightedge alignment procedure is described below. If greater alignment accuracy is desired, a dial indicator method is recommended. There are occasions when equipment manufacturers require more specific alignment tolerances, in which case, the manufacturer's recommendations should be followed.

1. To correct for angular misalignment, use calipers to check the gap between hubs. Adjust or shim equipment until the gap is the same at all points around the hubs.
2. To correct parallel offset, place a straightedge across the hub flanges in two places at 90° to each other. Adjust or shim equipment until the straightedge lays flat on both sides.
3. Tighten down connected equipment and recheck alignment.
4. Install elastomer element, tightening all capscrews to the values shown in Table 1 as described on the reverse side.
5. If practical, recheck and tighten capscrews after several hours of operation.

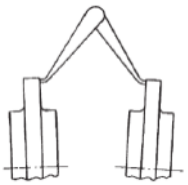

ADJUST FOR ANGULAR MISALIGNMENT

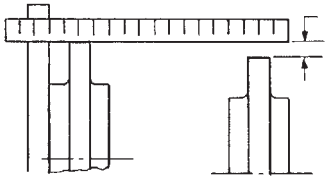

ADJUST FOR PARALLEL OFFSET

DIMENSIONS AND PART NUMBERS

Factory Part Numbers

FLEXIBLE ELEMENT			CAPSCREWS*			
Size	Spacer	Standard	Carbon Steel	Stainless Steel	Size-in	Qty
2	7300075	7300005	7300910	7300938	1/4-20 x 3/8	8 + 8**
3	7300080	7300010	7300912	7300940	1/4-20 x 1/2	8 + 8**
4	7300085	7300015				8 + 8**
5	7300090	7300020				8 + 8**
10	7300095	7300025	7300918	7300946		12 + 12**
20	7300100	7300030	7300920	7300948	3/8-16 x 5/8	12
30	7300105	7300035				12
40	7300110	7300040	7300924	7300952		16
50	7300115	7300045				16
60	7300120	7300050	7300928	7300956	1/2-13 x 7/8	16
70	7300125	7300055				16
80	7300130	7300060				16
100	–	7300065	7300934	7300965	3/4-10 x 1-1/2	20
120	–	7300070	7300936	7300967		24
140	–	7300071	7385753	7385702	1.0-8 x 1-1/2	32

* Capscrews have self-locking patches which should not be lubricated or reused more than twice

* * Extra capscrews provided for spacer couplings with rings.

*Hubs**

	Rough Bore		Stock Bore (Part & Ranges)		Taper-Lock® Hubs		Taper-Lock®	Q.D. Hubs	Q.D. Bush-	Standard Sleeve Ext.
Size	STD ††	Steel	STD ††	Steel	Iron	Steel	Bushing †	Steel	ing †	Steel
2	7300215	7369822	7300220-7300235	-	-	-	-	-	-	-
3	7300240	7369823	00245-00265	-	-	7300730	731008	-	-	-
4	7300270	7369824	00275-00300	-	7300800	7300740	731008	7300860	JA	7369575
5	7300305	7369825	00310-00335	-	7300805	7300745	731108	7300865	SH	7369576
10	7300340	7369826	00345-00370	-	7300810	7300750	731310	7300870	SDS	7369577
20	7300650	7300375	00651-00659	7300380-7300400	7300815	7300755	731610	7300875	SK	7369578
30	7300660	7300405	00661-00668	7300408-7300425	7300820	7300760	732012	7300880	SF	7369579
40	7300670	7300430	00669-00679	7300431-7300455	7300825	7300765	732517	7300885	E	7369580
50	7300680	7300460	00681-00686	7300461-7300470	7300830	7300770	732517	7300890	E	7369581
60	7300690	7300475	00692-00698	7300480-7300495	7300835	7300775	733020	7300895	F	7369582
70	7300700	7300500	-	-	7300840	7300780	733535	7300900	J	7369583
80	7300710	7300525	-	-	7300845	7300785	734040	7300905	M	7369584
100	7300720	7300550	-	-	7300850	* *	734545	* *	M	7369834
120	7300725	7300575	-	-	7300855	* *	735050	* *	N	7369835
140	7300727	7300580	-	-	7300857	* *	737060	7300908***	P	-

* Hubs are interchangeable for both the spacer and the standard coupling.

* * Consult Factory

* * * Iron

† Not supplied by Rexnord.

†† Standard hub material specifications: High strength sintered steel (Sizes #2 - #10), and Cast iron (Sizes #20 and above).

REX OMEGA STANDARD COUPLING

NOTE: A urethane slit on the inside of the element is the result of our quality control bond testing and is not a material defect.

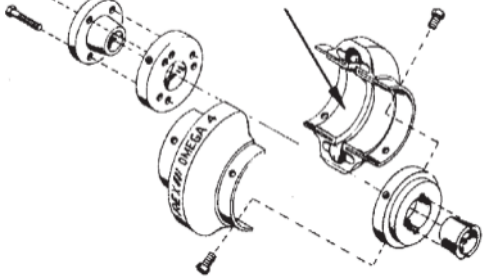

NOTE: Omega hubs are interchangeable with either standard or spacer flex elements; i.e., taper bushed hubs can be used with spacer elements and finished straight bore hubs can be used with standard elements.

ELEMENT REPLACEMENT: If element replacement is required, it is important to change both half elements, never replace just one half element. This is important because the element stiffness properties may change over time, and elements are packaged in weight matched pairs for better balance on high speed applications.

Rexnord

SECTION 5

TEST REPORTS

BLOWER TEST STAND REPORT
BLOWER VIBRATION REPORT
ROTOR BALANCE REPORT

TEST STAND REPORT

CUSTOMER: Perennial Energy

H.S.I. JOB #: 31802 CUST. P.O. #: _____

MACHINE: HSI 05108 Gas Pump SERIAL #: 0710768

DATE OF TEST: 3-17-11

START TIME: 7:30 AM END TIME: 9:00 AM

RUNNING KW: _____ AMPS: 46

TEST SPEED: 3822

DRIVE USED: BELT _____ DIRECT ✓

MAX. TEMP: INLET BRG: 154 OUTLET BRG: 139

MAX TEMP: CARBON INLET: NA OUTLET: NA

CHECKED FOR AIR SEAL LEAKS: INLET END: ✓ DISCH. END: ✓

CHECKED FOR OIL LEAKS: INLET END: grease DISCH. END: grease

PASSED: (Check one) YES ✓ NO _____

COMMENTS: _____

TECHNICIAN: Wintford Kerlnick

SIGNATURE: _____ DATE: _____

Abbreviated Last Measurement Summary
****

Database: C:\MTWIN\HSI2011A.DAT
Station: PERENNIAL ENERGY
Report Date: 17-MAR-11 16:17

MEASUREMENT POINT	OVERALL LEVEL
HSI 31802 - HSI BLOWER S/N 0710768	(17-MAR-11)
	OVERALL LEVEL
H01 - MOTOR OUTBOARD HORZ	.081 In/Sec
V02 - MOTOR OUTBOARD VIR.	.074 In/Sec
A03 - MOTOR OUTBOAD AXIAL.	.118 In/Sec
HO4 - MOTOR INBOARD HORZ.	.113 In/Sec
V05 - MOTOR INBOARD VIR.	.132 In/Sec
H06 - BLOWER INBOARD HORZ.	.149 In/Sec
V07 - BLOWER INBOARD VIR	.068 In/Sec
H08 - BLOWER OUTBOARD HORZ.	.141 In/Sec
V09 - BLOWER OUTBOARD VIR	.179 In/Sec
A10 - BLOWER OUTBOARD AXIAL	.119 In/Sec

Clarification Of Vibration Units:
In/Sec PK

PERFORMANCE TEST REPORT

CUSTOMER: Perennial Energy

H.S.I. JOB #: 31802 CUST. P.O. #:

MACHINE: HSI 05108 Gas Nat SERIAL #: 0710768

DATE OF TEST: 3/31/2011

START TIME: 2:00 pm END TIME: 5:00 pm

PASSED: (Check one) YES ✓ NO

COMMENTS:

ENGINEER: Maria Bouknight

SIGNATURE: Bouknight DATE: 4/13/2011

Houston Service Industries, Inc.
7901 Hansen, Houston, TX 77061

MULTI-STAGE CENTRIFUGAL BLOWER PERFORMANCE CURVE

BLOWER DATA	
Model	: 5108
Impeller(s)	: (8) 5012
Serial No.	: 0710768-31802
Process ID	: N/A

DESIGN POINT	
Inlet Volume (ICFM)	: 643.8
Volume (SCFM)	: 500.0
Diff Press (PSI)	: 8.690
Disch Press (PSIG)	: 7.250
Horsepower (BHP)	: 37.31
OP Speed (RPM)	: 3822

INLET CONDITIONS	
Bar Press (PSI)	: 13.654
Inlet Press (PSI)	: 12.209
Inlet Temp (°F)	: 85
Relative Hum.	: 100.0%
Molecular Wgt	: 29.433
K-1/K	: 0.2120

OTHER INFORMATION	
Date	: 03/31/11
Job No.	: WO31802
PO No.	: N/A
Customer	: Perennial Energy

ALTERNATE DESIGN POINT			
Inlet Volume (ICFM)	: 0	Horse Power	: N/A
Volume (SCFM)	: N/A	Inlet Vac (PSIG)	: N/A
Diff Press (PSI)	: N/A	Inlet Temp (°F)	: N/A
Disch Press (PSIG)	: 0	Relative Hum.	: N/A
OP Speed (RPM)	: N/A	Molecular Wgt	: N/A

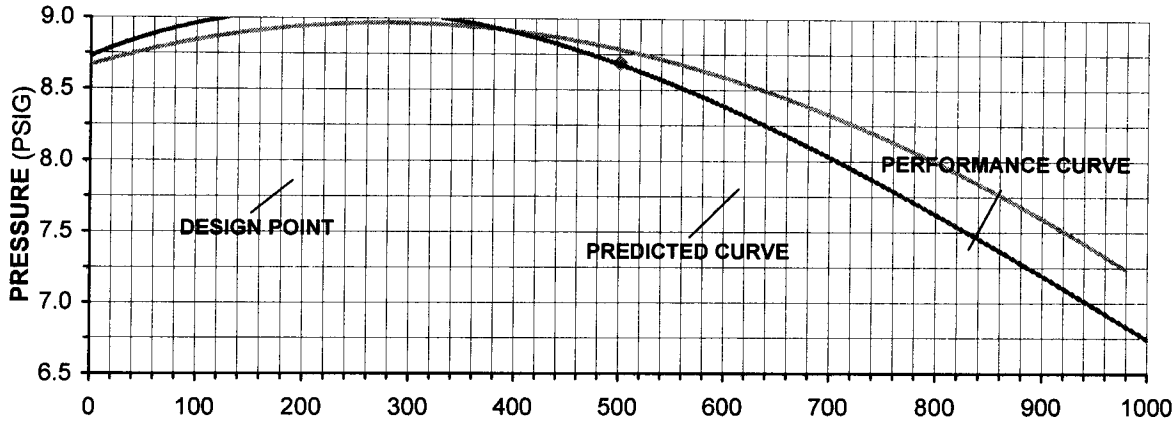

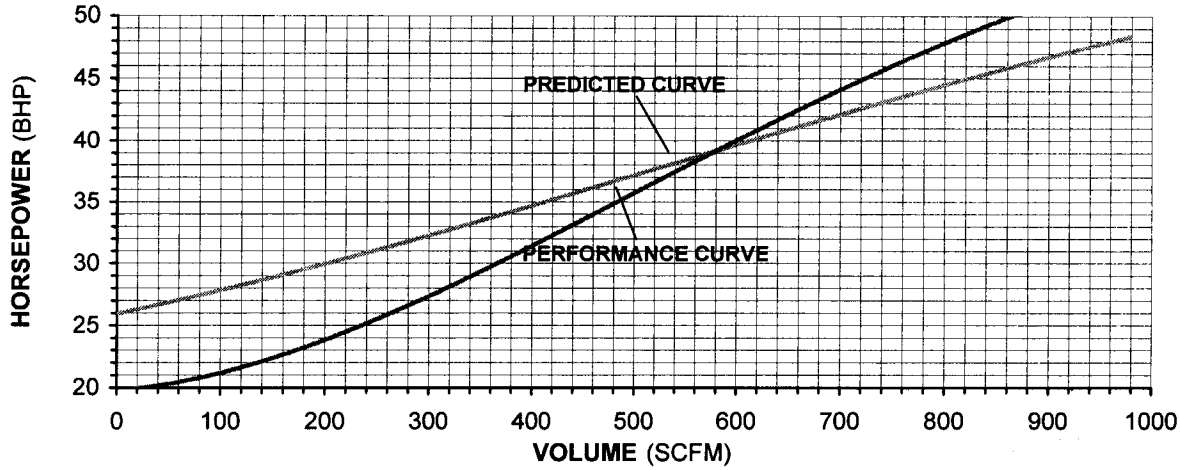

Test Conclusion:
The blower performance test was conducted in accordance of PTC-10 test procedures. The results of the blower performance is shown on the attached curve, indicating the blower's performance as expected and satisfing the design point condition. Please indicate your approval/acceptance of the result by signing below.

Maria Bouknight
Conducted by:

Witnessed by:

Approved by

BALANCE REPORT

Customer: Perennial

Job #: 31802 Description: HSI 05108

P.O. #: 231625 Tolerance: 0.1oz.in Dia. 22"

Serial #: 0710788 Technician: Chris W.

INITIAL UNBALANCE:

WEIGHT ADDED ☐ REMOVED ☒

LEFT AMT. / STATIC	RIGHT AMT. / COUPLE
2.35 oz. in 235°	4.05 oz.in 335°

FINAL BALANCE:

LEFT AMT. / STATIC	RIGHT AMT. / COUPLE
.0117 oz.in 134°	.0180 oz.in 88°

Notes:

Signed By: Chris Date: 3-14-11

HOUSTON SERVICE INDUSTRIES

7901 Hansen, Houston, TX 77061
Ph: 713-947-1623/800-725-2291 Fax: 713-947-6409
www.houserv.com

CASING AIR PRESSURE TEST REPORT

Date/ Fecha: 3/17/2011

Job Name/ Nombre de Trabajo: Perennial Energy

Work Order Number/ Número de Trabajo: 31802

Blower Serial #/ Número de Serie: 0710768-31802

Blower Model/ Modelo de Soplador: H.S.I 05108

Test Pressure/ Prueba de Presión: 15 p.s.i

Passed/ Aprobado: ✓ **Failed/ Reprobado:** _____

Notes/ Comentarios: _____

Test Performed By/ Examinado Por: Johnathan Cardenas / Rigo Quintero

Signature/ Firma: Johnathan Cardenas / Rigo Quintero

Witnessed By/ Testigo: Rigo Quintero

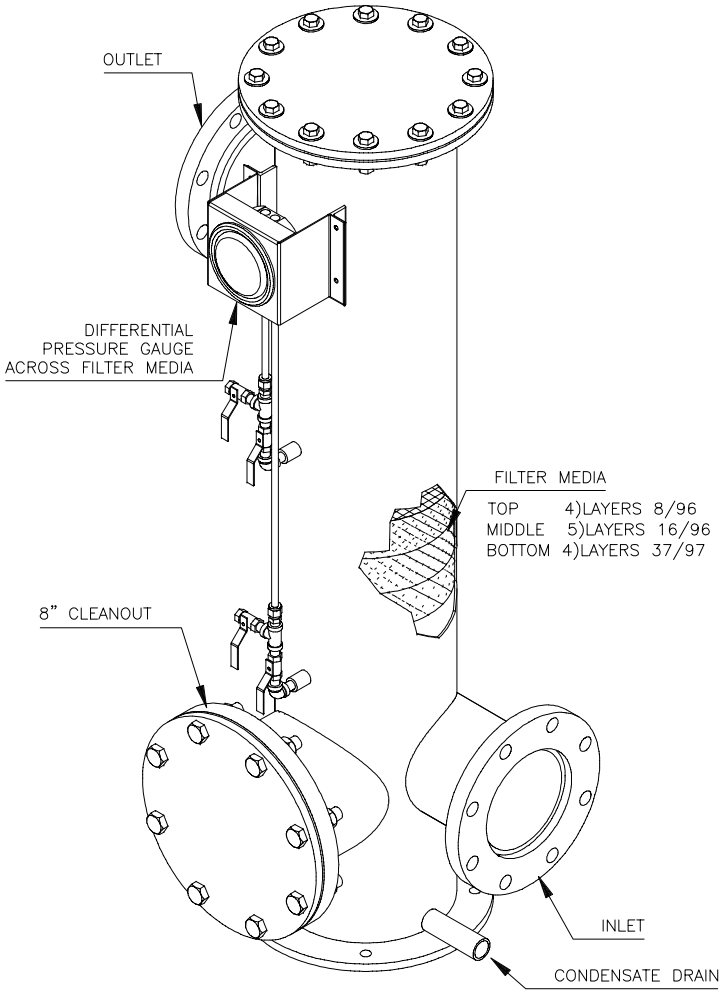

PERFORMANCE SPECIFICATION
99.9%>6 MICRON
REMOVAL EFFICIENCY

LTR	DESCRIPTION	DATE	APPROVED
3	REDRAWN W/CHANGES (6/18/10)		

REVISIONS

APPLICABLE JOB NO(S). STD
STANDARD

PERENNIAL ENERGY
1375 COUNTY ROAD 8690
WEST PLAINS, MO 65775
www.PerennialEnergy.com

This Drawing Contains Proprietary Data and May Not Be Duplicated, Copied, Reproduced or Otherwise Used In Any Manner Not in the Best Interest of Perennial Energy, Inc. All Ideas and Concepts Remain the Property of Perennial Energy, Inc.

ENGINEERING SIGNATURES

DESIGNED BY:	DATE
T.LANDERS	12/4/96
DRAWN BY:	DATE
T.CREECH	12/4/96

TITLE
STD DEMISTER
FILTER

UNLESS OTHERWISE SPECIFIED
DIMENSIONS ARE IN INCHES

FRACT	.XX	ANGLES
±1/16	±.03	±0°30

SIZE B 22x17
DWG. NO. PP-004-0047

MATERIAL: AS NOTED
SCALE AS NOTED
FILE NO. PP-004-0047 R3.DWG
SHEET 2 OF 2

REV-9/98

GCS-FLT-301 GCS-FLT-302

I:\ACADF\STD\PP-004\PP-004-0047 R3.dwg, 6/21/2010 10:43:31 AM, Printed from CAD-1

To place an order, contact:

INTERMESH

InterMesh Manufacturing Company
A Subsidiary of Kimre, Inc.
P.O. Box 571270
Miami, Florida 33257-1270
Tel (305) 233-7683 Fax (305) 233-3825

For installations requiring custom engineering, or materials other than polypropylene, contact:

Kimre, Inc.
P.O. Box 571240
Miami, Florida 33257-1240
Tel (305) 233-4249
Fax (305) 233-8687

4 Layers 37/97, 5 Layers 16/96, 4 Layers 8/96, 13 5/8" OD w/37 Mil tie Kit

Kimre, Inc.
PHASE SEPARATION TECHNOLOGY

INSTALLATION INSTRUCTIONS

B-GON® MIST ELIMINATORS*

At any velocity over 4 fps (1.2 m/s), the pad should be tied to the grid(s) on 6-inch (150mm) centers. The grid, in turn, must be attached to the ring support and to any support beams across the open area. Two men, one above and one below the pad and grid, are normally required for attaching the pad with monofilament or wire. A long needle will facilitate this operation.

Alternatively, or if the above is not feasible, then both a hold-down grid and a support gird will be used in mist eliminator assemblies. These grids, in turn, must be fastened to the vessel.

NOTE: At no time should the pad be compressed when using the monofilament or wire to tie the paid to the grid. This will result in higher localized pressure drops and possibly flooding. THIS IS IMPORTANT.

There must be no gaps between pad segments. These pad segments are especially prepared to provide edge interlocking, which eliminates gaps and any tendency of the edges to flutter at high velocities. If there are gaps, please follow the procedure in IR-4 to fill them.

Interleaving can be used to provide a one-piece construction for one dimension greater than six feet. This process carries a 15% premium, however if undertaken at the factory and so shipped. In many cases, it can be achieved at no extra cost by assembling individual layers at the jobsite.

Since pads are normally 1-2% oversize for an interference fit, one may find that the traditional tire irons (flat stock, 2-3 inches wide with a slight bend toward the middle) are helpful for slightly distorting the pads, or for slipping the pad edges uniformly together, or against a wall.

P.O. Box 571240 Miami, FL 33257-1240 USA • 305-233-4249 • Fax: 305-233-8687
Web: www.Kimre.com • Email: sales@Kimre.com

FIELD ADJUSTMENTS

Vessel too large: Place polypropylene or some other suitably inert felt at the periphery. Refer to our IR-4, "Instructions for Repairing Gaps".

Vessel too small: If circular, the most critical area for entrainment removal is usually in the center sections. Placement of pad sections should place any distortion at any point, provided there are no gaps. Refer to our IR-3, "Instructions for Adjusting Size".

*Patented

B-GON is a registered trademark of Kimre, Inc., Perrine, FL, USA

Copyright Kimre, Inc. 1998 All rights reserved.juanita

Instructions for Tying Pad

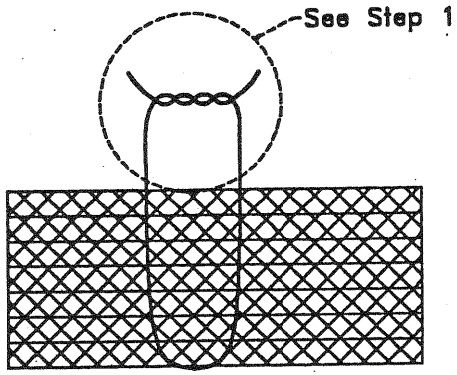

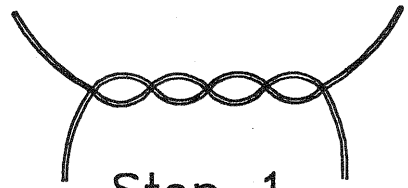

Step 1

To properly secure pad, follow steps illustrating how to make a two loop knot.

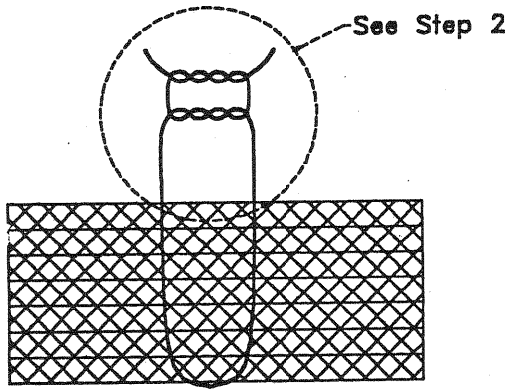

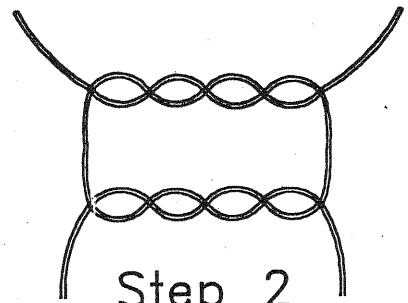

Step 2

Pad is to be tied on 6" centers.

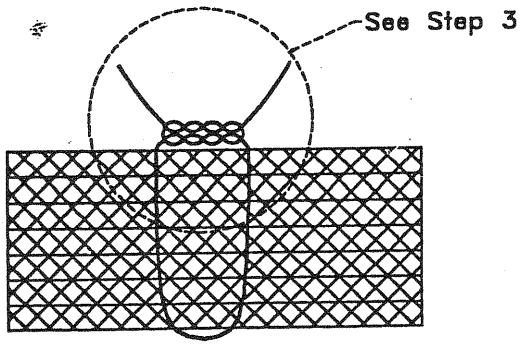

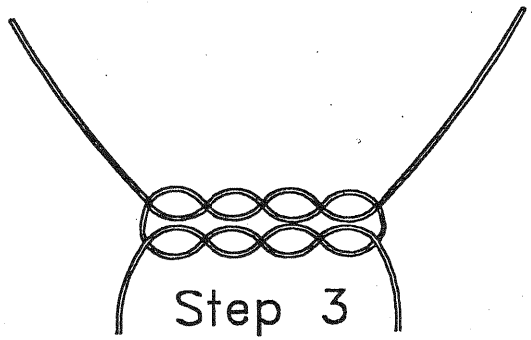

Step 3

IR-2 Page 3 of 3

F:\SUPPORT\ACAD\INSTRUCT.DWG

Compact/Big Boy Polyester & Paper Elements

Up to 6600 SCFM and Housings up to 12"

POLYESTER ELEMENTS

- 99%+ removal efficiency to 5 micron
- Pleated Media for **High Dirt Holding Capacity**
- Reinforced with epoxy coated steel wire on both sides of cloth
- Washable - lukewarm water & mild detergent
- Dust loading capacity is increased 40 - 50% with polyurethane prefilter
- Temp (continuous): min -15°F (-26°C) max 220°F (104°C)
- Optimal sealing surface & design

Particle Size vs. Filter Efficiency on polyester media at indicated face velocity:

15 cfm/ft² media
30 cfm/ft² media
45 cfm/ft² media

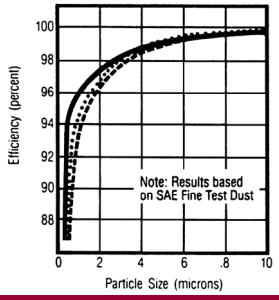

PAPER ELEMENTS

- 99%+ removal efficiency to 2 micron
- Pleated Media for **High Dirt Holding Capacity**
- Heavy duty industrial strength paper surrounded by heavy gauge galvanized expanded metal
- Dust loading capacity is increased 40 - 50% with polyurethane prefilter
- Temp (continuous): min: -15°F (-26°C) max 220°F (104°C)
- Optimal sealing surface & design

Particle Size vs. Filter Efficiency on paper media at indicated face velocity:

10 cfm/ft² media
15 cfm/ft² media
20 cfm/ft² media

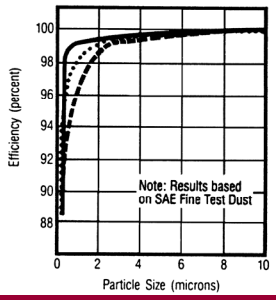

ADVANTAGES

- Less maintenance
- More durable
- Moisture resistant
- Handles hot air and oil mist from unload cycle of reciprocating/piston compressor
- Optimal surface area per given size
- Higher efficiency than many alternative media
- Cost Effective

CONFIGURATION

DRAWING

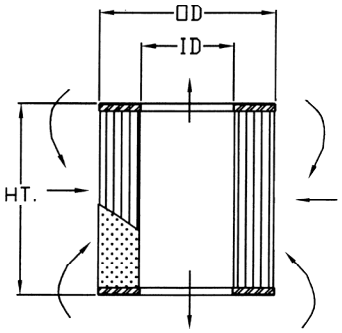

Dimension tolerance ± 1/4"

Face Velocity vs. Dust Holding Capacity

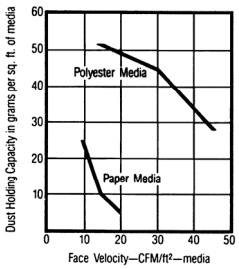

Polyester Models	Paper Models	STD Endcap Features	DIMENSIONS - inches ID	OD	HT	Polyester Surface Area ft²	Paper Surface Area ft²	Rated Flow SCFM
35P	34P	M	4 3/4	7 7/8	4 13/16	4.0	11.0	275
235P	234P	M	4 3/4	7 7/8	9 5/8	8.3	22.8	570
335P	334P	M	4 3/4	7 7/8	14 1/2	12	34	800
239P	238P	GBN	4 7/8	9 1/4	10	11.5	52	570
245P	244P	GN | M	6	9 3/4	9 5/8	14	35.5	880
345P	344P	GN	6	9 3/4	14 1/2	22.1	57	1100
275P	274P	GN	8	11 3/4	9 5/8	19	45.4	1100
375P	374P	GN	8	11 3/4	14 1/2	28	68.1	1500
377P	376P	GN	9	14 5/8	14 1/2	50	125	1825
385P	384P	GN	14	19 5/8	14 1/2	50	140	3300
485P	484P	GN	14	19 5/8	21 1/2	75	200	4705
685P		GN	14	19 5/8	28 1/2	100		6600

Legend
B= Closed one end w/ **B**olt hole, open on other end
C= **C**losed one end, open on other end
F= **F**elt gaskets on open end(s)
G= **G**alvanized metal endcaps
I= **I**njection molded santoprene
M= **M**olded plastisol
N= **N**eoprene gaskets on open end(s)
R= Mixed **R**ubber/cork gasket on open ends
T= **T**in plated metal endcaps

See back page for information about media for special applications.

P = Polyurethane Prefilter Included

Note: Model offerings and design parameters may change without notice.

1151 Ardmore Ave. • Itasca, IL 60143 USA
Sales/Service: 630.773.1363 • Fax: 630.773.0727
E-mail: sales@solbergmfg.com • Web Site: www.solbergmfg.com

McMASTER-CARR®

CHICAGO, ILLINOIS

CATALOG

112

Serving industry since 1901

TELEPHONE
(630) 833-0300
(630) 600-3600

INTERNET
www.mcmaster.com

FAX
(630) 834-9427

E-MAIL
chi.sales@mcmaster.com

MAIL
P.O. Box 4355
Chicago, IL 60680-4355

STREET ADDRESS
600 County Line Road
Elmhurst, IL 60126-2081

Steel Ejector Exhaust Muffler/Filters

- Maximum Pressure: 125 psi
- Maximum Temperature: 150° F
- Filtration: 800 microns

Air is concentrated in a narrow stream over a long distance to deliver maximum force exactly where you need it. Mufflers have low pressure requirements, yet provide efficient air thrust to eject parts. They reduce exhaust noise by 17-22 decibels. Made of zinc-plated steel with a nylon insert. **Connections:** NPT male.

Pipe Size	Max. cfm @ 90 psi	Height	Dia.		Each
1/8"	22	1 3/8"	7/16"	9837K41	$4.52
1/4"	34	1 3/4"	9/16"	9837K42	5.07
3/8"	45	2 1/4"	11/16"	9837K43	5.14
1/2"	68	2 23/32"	7/8"	9837K44	6.17
3/4"	75	3 5/32"	1 1/16"	9837K45	8.61
1"	101	3 7/8"	1 5/16"	9837K46	11.00

Aluminum Exhaust Muffler/Filters

- Maximum Pressure: 150 psi
- Maximum Temperature: 325° F
- Filtration: 10 microns

Mufflers have rugged construction: top and bottom covers are cast aluminum; perforated housing, tie rods, and nuts are zinc-plated steel. These mufflers reduce noise level by 17-22 decibels with little impairment of operating efficiency.

Air Exhaust Mufflers—Control the exhaust noise from air cylinders, valves, and other air-operated devices.

Vacuum Exhaust Mufflers—Reduce the noise of vacuum pump exhaust. Applications include suction devices, vacuum frames, chucks, simulation chambers, and transfer and control devices.

Connections: NPT.

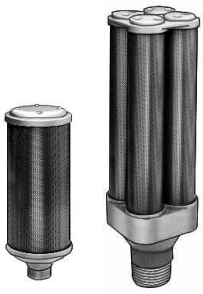

Single Chamber *Four Chamber*

Pipe Size	Height	Dia.	Air Exhaust Max. cfm @ 90 psi		Each	Vacuum Exhaust Max. cfm @ 15 psi		Each
***NPT Male**—Single Chamber*								
1/8"	3 1/8"	1 27/32"	44	4440K121	$4.63	8	9850K51	$6.06
1/4"	4 3/8"	1 27/32"	84	4440K122	5.55	26	9850K52	7.14
3/8"	5 1/8"	2 19/32"	192	4440K123	8.30	50	9850K53	10.07
1/2"	6"	3 5/32"	256	4440K124	9.24	75	9850K54	11.15
3/4"	7 3/16"	3 13/32"	544	4440K125	11.67	150	9850K55	14.25
1"	8 3/4"	3 29/32"	800	4440K126	13.58	230	9850K56	16.56
1 1/4"	8 3/4"	3 29/32"	1,360	4440K127	15.42	315	9850K57	18.21
1 1/2"	13 9/16"	5 1/4"	2,080	4440K128	23.43	510	9850K58	27.68
2"	18 7/8"	5 1/4"	3,200	4440K129	27.72	870	9850K59	33.73
***NPT Male**—Four Chamber*								
3"	22 7/8"	8 1/4"	7,200	4440K131	136.38	1,975	9850K61	158.90
4"	23 1/2"	9 3/8"	14,000	4440K132	149.26	3,700	9850K62	177.92
6"	30 7/8"	13 1/8"	36,000	4440K133	205.36	5,900	9850K63	244.54
***NPT Female**—Single Chamber*								
1/8"	2 13/16"	1 27/32"	44	4440K141	4.63	8	9850K71	6.06
1/4"	4"	1 27/32"	84	4440K142	5.55	26	9850K72	7.14
3/8"	4 9/16"	2 19/32"	192	4440K143	8.30	50	9850K73	10.07
1/2"	5 1/2"	3 5/32"	256	4440K144	9.24	75	9850K74	11.15
3/4"	6 11/16"	3 13/32"	544	4440K145	11.67	150	9850K75	14.25
1"	8"	3 29/32"	800	4440K146	13.58	230	9850K76	16.56
1 1/4"	8"	3 29/32"	1,360	4440K147	15.42	315	9850K77	18.21
1 1/2"	12 1/2"	5 1/4"	2,080	4440K148	23.43	510	9850K78	27.68
2"	17 3/4"	5 1/4"	3,200	4440K149	27.72	870	9850K79	33.73

High Pressure Aluminum Exhaust Muffler/Filters

- Maximum Pressure: 300 psi
- Maximum Temperature: 160° F
- Filtration: 250 microns

Delivering high pressure, these units have an aluminum housing for corrosion resistance and durability as well as self-cleaning screens made of 50-mesh Type 304 stainless steel (unless noted). Units reduce noise by 17-20 decibels. **Connections:** NPT.

Female

Pipe Size	Max. cfm @ 100 psi	Ht.	Dia.	NPT Male	Each	NPT Female	Each
1/8"	20	1 7/8"	13/16"	9993K31	$6.89	9993K41	$6.89
1/4"	33	1 7/8"	13/16"	9993K32	6.89	9993K42	6.89
3/8"	82	3 1/4"	1 1/4"	9993K33	10.46	9993K43	10.46
1/2"	110	3 1/4"	1 1/4"	9993K34	10.46	9993K44	10.46
3/4"	175	4 5/8"	2"	9993K35	21.77	9993K45	21.77
1"	215	4 5/8"	2"	9993K36	21.77	9993K46	21.77
1 1/4"	520	5 1/2"	2 1/2"	_____	_____	9993K47★	64.77
1 1/2"	550	5 1/2"	2 1/2"	_____	_____	9993K48★	67.40
2"	570	6 7/16"	3"	_____	_____	9993K49★	123.06

★ Has a brass screen.

Polyethylene Exhaust Muffler/Filters

- Maximum Pressure: 150 psi
- Maximum Temperature: 150° F
- Filtration: See table

The one-piece molded body is made of tough, resilient, high-density polyethylene welded to a polyethylene adapter. The units are easy to clean with mineral spirits and are not affected by oil or water in the air lines. They reduce noise level by 20-30 decibels. Color is gray.

Connections: NPT male.

Standard Flow

Pipe Size	Max. cfm @ 14.7 psi	Height	Dia.		Each
***Standard Flow** (50 to 60 microns)*					
10-32	0.7	15/16"	19/64"	4427K69	$1.52
1/8"	13	1 3/16"	1/2"	4427K71	1.78
1/4"	24	1 1/2"	21/32"	4427K72	2.07
3/8"	51	2 5/8"	15/16"	4427K73	3.00
1/2"	60	2 5/8"	15/16"	4427K74	3.11
3/4"	78	5 25/32"	1 1/2"	4427K75	5.85
1"	88	6 5/8"	1 7/8"	4427K76	7.41
***High Flow** (80 to 100 microns)*					
1/8"	33	1 3/16"	1/2"	4427K81	1.78
1/4"	60	1 1/2"	21/32"	4427K82	2.07
3/8"	128	2 5/8"	15/16"	4427K83	3.00
1/2"	150	2 5/8"	15/16"	4427K84	3.11
3/4"	195	5 25/32"	1 1/2"	4427K85	5.85
1"	220	6 5/8"	1 7/8"	4427K86	7.41

Nylon Exhaust Muffler/Filters

- Maximum Pressure: 150 psi
- Maximum Temperature: 120° F
- Filtration: 250 microns

Housing is made of glass-filled nylon and ultrasonically welded to create a lightweight yet durable corrosion resistant muffler/filter. Screens made from self-cleaning 50-mesh Type 304 stainless steel. Muffler/filters reduce exhaust noise by 17-20 decibels.

Connections: NPT male.

Pipe Size	Max. cfm @ 100 psi	Height	Dia.		Each
1/8"	20	2 7/64"	13/16"	9992K21	$4.63
1/4"	33	2 15/64"	13/16"	9992K22	4.63
3/8"	82	3 27/64"	1 1/4"	9992K23	6.83
1/2"	110	3 35/64"	1 1/4"	9992K24	6.83

Polypropylene Exhaust Mufflers

- Maximum Pressure: 150 psi
- Maximum Temperature: 175° F

Exceptionally lightweight mufflers have a fail-safe feature that guards against excessive back-pressure build-up and clogging. They reduce noise level by 10-20 decibels. Made of glass-filled polypropylene. Housing is black.

Mufflers with a polyethylene inner mesh element reduce noise about 10% better than those with metal elements.

Connections: NPT male.

To Order: Please specify inner mesh element material: brass, stainless steel, or polyethylene.

Short and Wide *Long and Narrow*

Pipe Size	Height	Dia.		Each
Short and Wide				
1/8"	1 13/16"	1 5/8"	4869K71	$5.70
1/4"	1 13/16"	1 5/8"	4869K72	5.70
27/32"	2 27/32"	2"	4869K73	8.10
1/2"	2 31/32"	2"	4869K74	8.10
3/4"	4 1/4"	2 29/32"	4869K75	16.20
1"	4 13/32"	2 29/32"	4869K76	16.20
Long and Narrow				
1/8"	2 1/3"	15/16"	4869K81	5.70
1/4"	2 15/32"	15/16"	4869K82	5.70
3/8"	3 1/2"	1 11/32"	4869K83	8.10
1/2"	3 21/32"	1 11/32"	4869K84	8.10
3/4"	5 19/32"	1 29/32"	4869K85	16.20
1"	5 27/32"	1 29/32"	4869K86	16.20

McMASTER-CARR®

CHICAGO, ILLINOIS

open 24 hours 7 days a week

TELEPHONE	(630) 833-0300 (630) 600-3600
TELÉFONO (ESPAÑOL)	(630) 833-7100
INTERNET	www.mcmaster.com
FAX	(630) 834-9427
TTY FOR THE HEARING IMPAIRED	(630) 834-8844
E-MAIL	chi.sales@mcmaster.com
MAIL	P.O. Box 4355 Chicago, IL 60680-4355
STREET ADDRESS	600 County Line Rd. Elmhurst, IL 60126-2081

Additional Locations

Atlanta

Mail	Street Address	Telephone	(404) 346-7000
P.O. Box 740100	6100 Fulton Industrial Blvd.	Fax	(404) 349-9091
Atlanta, GA 30374-0100	Atlanta, GA 30336-2852	E-Mail	atl.sales@mcmaster.com

Cleveland

Mail	Street Address	Telephone	(330) 995-5500
P.O. Box 94930	200 Aurora Industrial Pkwy.	Fax	(330) 995-9600
Cleveland, OH 44101-4930	Aurora, OH 44202	E-Mail	cle.sales@mcmaster.com

Los Angeles

Mail	Street Address	Telephone	(562) 692-5911
P.O. Box 54960	9630 Norwalk Blvd.	Fax	(562) 695-2323
Los Angeles, CA 90054-0960	Santa Fe Springs, CA 90670-2932	E-Mail	la.sales@mcmaster.com

New York City — Philadelphia

Mail	Street Address	Telephone	(732) 329-3200
P.O. Box 440	473 Ridge Rd.	Fax	(732) 329-3772
New Brunswick, NJ 08903-0440	Dayton, NJ 08810-0317	E-Mail	nj.sales@mcmaster.com

Terms and Conditions

TERMS. BY PURCHASING FROM US, YOU AGREE TO THESE TERMS AND CONDITIONS. No other terms shall apply except as agreed in writing signed by us. We reserve the right to correct typographic errors and reject orders.

PRICES; PAYMENT. Prices, title and risk of loss are F.O.B. our warehouse. Prices don't include taxes or shipment and may be changed without notice. Payment due within 30 days of shipment, net on open account less 2% for payment within 10 days of shipment. Visa, MasterCard, and American Express accepted for net invoice amount. Credit card arrangements subject to change. Open accounts available on approval.

RETURNS. If shipment appears damaged, don't pay freight unless damage is marked on bill by carrier. No return authorization required.

LIMITED WARRANTY. Our only warranty obligation is to replace any item proved defective in material or workmanship. ALL OTHER WARRANTIES, EXPRESS OR IMPLIED, INCLUDING WITHOUT LIMITATION THE IMPLIED WARRANTIES OF MERCHANTABILITY AND FITNESS FOR PURPOSE, ARE DISCLAIMED.

LIABILITY. WE SHALL NOT BE LIABLE IN CONTRACT, WARRANTY, TORT OR OTHERWISE FOR CONSEQUENTIAL, SPECIAL, EXEMPLARY OR INCIDENTAL DAMAGES. IN NO EVENT SHALL OUR LIABILITY EXCEED THE PURCHASE PRICE. ENFORCING THE LIMITED REPLACEMENT RIGHTS IS YOUR EXCLUSIVE REMEDY.

INFORMATION. Information about products is as provided by our supplier. We make no warranty or representation concerning such information. SOME PRODUCTS SOLD BY US CONTAIN INGREDIENTS KNOWN TO THE STATE OF CALIFORNIA TO CAUSE CANCER AND BIRTH DEFECTS OR OTHER REPRODUCTIVE HARM. UPON REQUEST, WE WILL FURNISH YOU WITH MATERIAL SAFETY DATA SHEETS FOR HAZARDOUS SUBSTANCES AS DEFINED BY OSHA AND A LIST OF PRODUCTS OR SUBSTANCES KNOWN BY THE STATE OF CALIFORNIA TO CAUSE CANCER OR REPRODUCTIVE HARM.

OBLIGATIONS. You warrant, represent and agree: (1) to comply with all laws; (2) that our sale and shipment of the product will not, by export thereof, your legal status or otherwise, cause us to violate any law; and (3) to indemnify us against any losses from a failure by you or a third party to comply with law or these terms and conditions, or from use of the product.

tyco

Flow Control

VAREC ISO 9001 Certified Firm

VAREC®

Vapor Control Inc.

5000/5010 Series
Flame Arrester

INSTRUCTION, OPERATION AND MAINTENANCE MANUAL

33-07765 Rev. C

TABLE OF CONTENTS

Disclaimer of Warranties 3
Limitations of Seller's Liability 3
Safety Precautions 3
Safety Precaution Definitions 4
CAUTION 4
General 5
Construction 5
Practical Limitations 5
Operation 6
Installation 6
Maintenance 7
Replacement Parts 10
Flow Capacity 15

LIST OF TABLES

Table 1- 5000 Series, Materials of Construction 12
Table 2 – 5010 Series, Materials of Construction 14

Disclaimer of Warranties

The contract between the Seller and the Buyer states the entire obligation of the Seller. The contents of this instruction manual shall not become part of or modify any prior or existing agreement, commitment or relationship between the Seller and Buyer. There are no express or implied warranties set out in this instruction manual. The only warranties that apply are those in the existing contract between the Seller and Buyer.

The Varec 5000/5010 Series Flame Arresters have not been tested by Varec under all possible operational conditions, and Varec does not have all the data relative to your application. The information in this instruction manual is not all inclusive and does not and cannot take into account all unique situations Consequently, you should review this product literature in view of your application. If you have any further questions, please contact Varec for assistance.

Limitations of Seller's Liability

If it is determined that this instruction manual created some new warranties, Varec's liability shall be limited to repair or replacement under the standard warranty clause. In no case shall Varec's liability exceed that stated as Limitations of Remedy in the contract between Varec and our customer.

Safety Precautions

READ AND UNDERSTAND THIS INSTRUCTION MANUAL BEFORE INSTALLING, OPERATING OR PERFORMING MAINTENANCE ON VAREC 5000/5010 SERIES FLAME ARRESTERS. FOLLOW ALL PRECAUTIONS AND WARNINGS NOTED HEREIN WHEN INSTALLING, OPERATING OR PERFORMING MAINTENANCE ON THIS EQUIPMENT.

WARNING

Flame arrester should be installed upstream and not more than 15 feet from the ignition source for use in accordance with UL approval.

Flame Arrester must be isolated from the gas piping before performing maintenance. All gas must be blocked and pressure safely vented.

Flame arresters are not capable of stopping a flame front in mixtures of air with hydrogen, acetylene, ethylene oxide, or carbon disulfide.

Safety Precaution Definitions

CAUTION

Damage to equipment may result if this precaution is disregarded.

WARNING

Direct injury to personnel or damage to equipment which can cause injury to personnel may result if this precaution is not followed.

General

The VAREC Model 5000/5010 Series Flame Arresters are designed to stop the propagation of flame from external sources. They are used on storage tank roofs, digester covers, and in waste gas piping systems. These units are installed where fire protection is required in combination with pressure relief or shut-off valves in vapor balancing, recovery, or open vent piping systems.

WARNING

Flame Arresters are not capable of stopping a flame front in mixtures of air with hydrogen, acetylene, ethylene oxide, or carbon disulfide.

Flame Arrester should be installed upstream of and not more than 15 feet from the ignition source for use in accordance with UL aproval.

✎NOTE

Varec Flame Arresters bearing UL approval are tested for use on oil storage tanks, installed not more than 15 feet from the open end of the vent pipe. (Reference UL 525.) These test conditions may not represent the actual service conditions or piping system design. API Publication 2028 states that the Arresters should be independently tested under actual service conditions before installation.

Construction

The standard unit is constructed of a heavy cast housing containing a removable multiplate bank assembly with aluminum extensible frame. A fixed 316 S.S. frame is also available. Working pressure rating is 10 PSIG (69.0 kPa). For material selection see Tables 2 & 3.

Practical Limitations

While Flame Arresters decrease the possibility of flame propagation in a system, certain variables must be evaluated to ensure safety. The relative fire hazard of flammable mixtures can be judged by the upper and lower explosive limits. These limits are expressed as percent by volume of the gas or vapor in air. The explosive range is that span of concentrations lying between the lower and upper limits. The upper limit is the point at which the mixture is too rich to burn, i.e., contains too little oxygen to support combustion. The broader the explosive range, the easier it is to create an air-gas explosive mixture. Conversely, when the explosive range is narrow, the chance of developing a hazardous air-gas mixture decreases.

Table 1 gives the approximate limits of flammability of some single gases, vapors, and industrial mixtures in air at common temperatures and at atmospheric pressure.

WARNING

In all cases where the ratio of upper limit/lower limit exceeds 10, the use of Flame Arresters is not recommended. Also, the presence of any O_2 is dangerous because of the lack of homogeneity which is possible in gas mixtures. Any surplus of oxygen provides the potential for rapid explosion.

Operation

Flame Arresters do not prevent ignition of flammable mixtures, but do prevent the propagation of a flame. The Varec 5000/5010 Series Flame Arresters stop flame propagation by absorbing and dissipating heat through the surface area of the bank sheets. Heat is absorbed as ignited gas attempts to pass through the small passages within the bank assembly. This action lowers the temperature of the gas below its ignition point and quenches the flame.

Product	Limits in Air Pressure		Product	Limits in Air Pressure		Product	Limits in Air Percent	
	Lower	Higher		Lower	Higher		Lower	Higher
Acetyldehyde	4.1	55.0	Ethy-Alcohol	4.3	19.0	Methyl-Alcohol	7.3	36.0
Acetone	3.0	11.0	Ethyl-Bromide	6.7	11.3	Methyl-Chloride	10.7	17.4
Acetylene	2.5	81.0	Ehtyl-Chloride	3.8	15.4	Methyl-Ethyl-Ketone	1.8	10.0
Ammonia	15.0	28.0	Ethyl-Ether	1.9	48.0	Methyl-formate	5.9	20.0
Benzene	1.4	7.1	Ethyl-Formate	2.7	13.5	Methyl-Proply-Ketone	1.5	8.0
Benzine	1.1		Ethylene	3.1	32.0	Natural Gas	3.8	17.0
Blast Furnace Gas	35.0	74.0	Furfural	2.1		Noriane	0.8	
Butadiene	2.0	11.5	Gasoline	1.4	7.6	Octane	1.0	
Butane	1.9	8.5	Hexane	1.2	7.5	Pentane	1.5	7.8
Butylene	2.0	9.6	Heptane	1.2	6.7	Propane	2.1	9.5
Carbon Disulphide	1.25	44.0	Hydrocyanic Acid	6.0	41.0	Propyl-Alcohol	2.1	13.5
Carbon Monoxide	12.5	74.0	Hydrogen	4.0	75.0	Propylene	2.4	10.3
Cyclohexane	1.3	8.0	Hydrogen-Sulhide	4.3	5.0	Pyridine	1.8	12.4
Cyclopropane	2.4	10.4	Isobutane	1.8	8.4	Styrene	1.1	6.1
Decane	0.8	5.4	Isopentane	1.4	7.6	Toluene	1.4	6.7
Ethane	3.0	12.5	Isopropyl-Alcohol	2.0	12.0	Water Gas	7.0	72.0
Ethyl-Acentate	2.5	9.0	Methane	5.3	14.0	Xylene	1.0	6.0

Reference: Bureau of Mines Bulletin 503, Limits of Flammability of Gases and Vapors, 1952

Table 1 – Flammability Limit of Gases and Vapor

Installation

The 5000 Series Flame Arrester (ref. Figure 1) is designed for vertical application in pipe lines and on tank or digester roofs. The 5010 Series Flame Arrester (ref. Figure 2) is designed for horizontal positioning in pipelines, however, it may be in either direction.

The cover, roof or piping system must have the appropriate flange(s) installed for mating with the Flame Arrester. Flame Arrester with aluminum housings should be mated with an ANSI Class 125 F.F. flange. The 316 stainless steel housing should be mated with an ANSI Class 150 R.F. flange. The Arrester must be located with clearance allowed for removal of the bank assembly.

The flange of vertical mounting must be plumb and level to ensure proper operation of the pressure relief valve (when used in combination with the Flame Arrester).

The flange for horizontal mounting must be oriented to ensure that Arrester drain hole will be at the extreme bottom (6 o'clock) position.
Remove the Flame Arrester from the shipping container or pallet. Remove flange protectors. Inspect for and remove any packing or other loose material in the inlet/outlet chambers of the housing.
Remove cover and extract bank assembly. Inspect for shipping debris or damage, and correct as required. Insert bank and replace cover. Tighten cap screws uniformly.

WARNING

The aluminum bank assembly weighs from 10 to 80 pounds and the 316 S.S. assembly is substantially heavier. Use the appropriate tools and equipment when handling these units to avoid injury.

4. Place the appropriate full face flange gasket (by others) on the flange.

CAUTION

If it is necessary to mate an ANSI Class 125 F.F. flange with an ANSI Class 150 R.F. flange, use the proper spacer to convert the raised face to a flat face.

5. Place the Arrester on the flange, and position the unit so that the bank assembly can be readily extracted for inspection and maintenance.

NOTE

When installing the Model 5010 in a horizontal position, check the drain hole to see that it is functional. Install the appropriate drain piping along with a Varec Drip Trap or an isolation valve.

Install mounting hardware and tighten uniformly.

The Flame Arrester is now installed and ready for use.

Maintenance

Maintenance is the most important factor in the operation of the Flame Arrester. The bank sheets must be kept clean to prevent a decrease in gas flow through the system and loss of heat absorbing efficiency.

WARNING

Failure to properly maintain the unit could result in reduction of safety and impairment of system operation.

A regular inspection program is important. The frequency of inspection is determined by the application. Consideration should be given to the amount and nature of water or solids in the gas, and the corrosivity of the process stream. Generally, the first inspection should be made 30 days after commissioning. Inspections should continue on a 30 day schedule unless excessive deposits or accumulation of foreign matter are found. If so, the frequency of inspections should be increased. Adjust inspection frequency to maintain free and unrestricted flow through the Arrester.

WARNING

Flame Arrester must be isolated from the gas piping before removing cover plate. All gas must be blocked and pressure safely vented. Ensure that Arrester is cool after a fire, or wear appropriate protective clothing.

1. Remove cover cap screws and cover plate. Pull out bank assembly by pulling on bank handle. If desired, the bank assembly may be removed from the housing.

WARNING

The aluminum bank assembly weighs from 10 to 80 pounds and the 316 S.S. assembly is substantially heavier. Use the appropriate tools and equipment when handling these units to avoid injury.

   a. Extend the aluminum frame to its full open position. Both sides of each grid sheet may be inspected and cleaned without removal from the frame.
   b. The 316 S.S. frame is non-extensible and must be disassembled to access the bank sheets.

2. Check for corrosion, bent, warped or otherwise damaged sheets that could cause an opening for a direct flame path. Replace with a full bank sheet set if necessary.

3. Bank assembly cleaning procedure is based on the type of residue to be removed. Determine if residue type is Group I, II, or III. Follow the cleaning procedures for the selected group.

WARNING

Use all volatile and flammable solvents carefully to avoid ignition or prolonged breathing. Use protective clothing and gloves when using acid to avoid burns from contact with skin.

Group I
Residue Type: Soil, sand, pollen, and metallic salts.

Cleaning Procedure:

   a. Wash bank sheets with a mild solvent such as petroleum naphtha or commercial petroleum derived cleaning fluids.
   b. Rinse sheets with a solvent that does not leave an oily film. This is necessary to avoid collecting foreign matter.
   c. Blow out dry particles with compressed air.
   d. Wash bank sheets with hot water.
   e. Steam bank assembly clean.

Group II
Residue Type: Metallic oxides and metallic carbonates.

Cleaning Procedure:

a. Wash bank sheets as described in Group I, Step 1.
b. Soak entire bank assembly in cold 35% nitric acid.

CAUTION

Use acid only on aluminum or stainless steel bank assemblies. Do not use on carbon steel or monel.

NOTE

If residue still remains, place bank assembly in boiling 35% nitric acid. Once all residue is removed, soak bank assembly in a solution of baking soda and water (8 ounce baking soda to 3 gallons water) to neutralize any remaining acid. Blow dry using compressed air.

Group III
Residue Type: Organic tars, organic gums and sulfur organic residues.

Cleaning procedure:

a. Wash bank sheets as described in Group I, Step 1.
b. Blowout with compressed air.
c. Wash bank sheets with a strong solvent such as benzol, xyol, carbon tetrachloride, acetone, carbon disulfide, paint thinner (not lacquer), or a mixture of 1/3 each of benzol, alcohol and acetone.

4. If residue cannot be removed by the above procedures, replace with a new bank sheet set.

WARNING

Clogged bank assembly can restrict flow and reduce ability to stop flame propagation.

5. Place the bank assembly into the Arrester housing. Install new gasket, cover plate, and cap screws.
   a. The aluminum extensible frame bank assembly may not go entirely back into place. The force needed to compress bank into place is supplied by tightening cover plate cap screws.
   b. The 316 S.S. fixed frame bank assembly should allow cover to close readily.

6. Install all cap screws hand tight. Cross tighten all cap screws evenly around cover per below drawing. Torque to 40-50 ft/lbs.

7. The Flame Arrester is ready to be placed back into service. Perform soap test. If any leakage is detected, further tighten cap screws (maximum torque not to exceed 60 ft.-lb.)

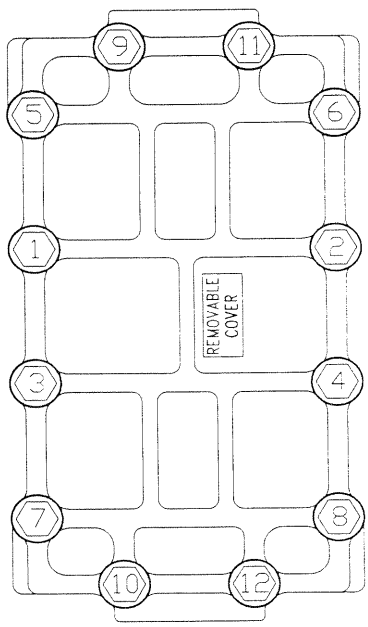

Replacement Parts

When ordering replacement parts specify Flame Arresters by Model number, series number, and pipe size. Identify replacement parts by item number, description, and material as shown on reference drawings. Include part number where possible.

Size	2	3	4	6	8	0	1
Nominal	2 In.	3 In.	4 In.	6 In.	8 In.	10 In.	12 In.
Pipe Size	50 MM	75 MM	100 MM	150 MM	200 MM	250 MM	300 MM
Bank Assembly Alum Ext. Frame w/Alum Sheets	BM 6027	BM6055	BM6090	BM6126	BM6245	BM6269	BM6716
Bank Assembly Alum Ext. Flame w/316 S.S. Sheets	BM18996-000	BM18998-000	BM19000-000	BM18956-000	BM18958-000	BM19002-000	BM19004-000
Bank Assembly 316 S.S. Fixed Frame w/316 S.S. Sheets	BM19882-600	BM19883-600	BM19884-600	BM19885-600	BM19886-600	BM19887-600	BM19888-600
Bank Sheet Set Aluminum	BA17040	BA17046	BA17052	BA17058	BA17064	BA17070	BA17076
Bank Sheet Set 316 S.S.	BA17044	BA17050	BA17056	BA17062	BA17068	BA17074	BA17080
Gasket Kit Compressed Non-Asbestos	13-09101-02	13-09101-03	13-09101-04	13-0910106	13-09101-08	13-09101-10	13-09101-12

Figure 1 – 5000 Flame Arrester

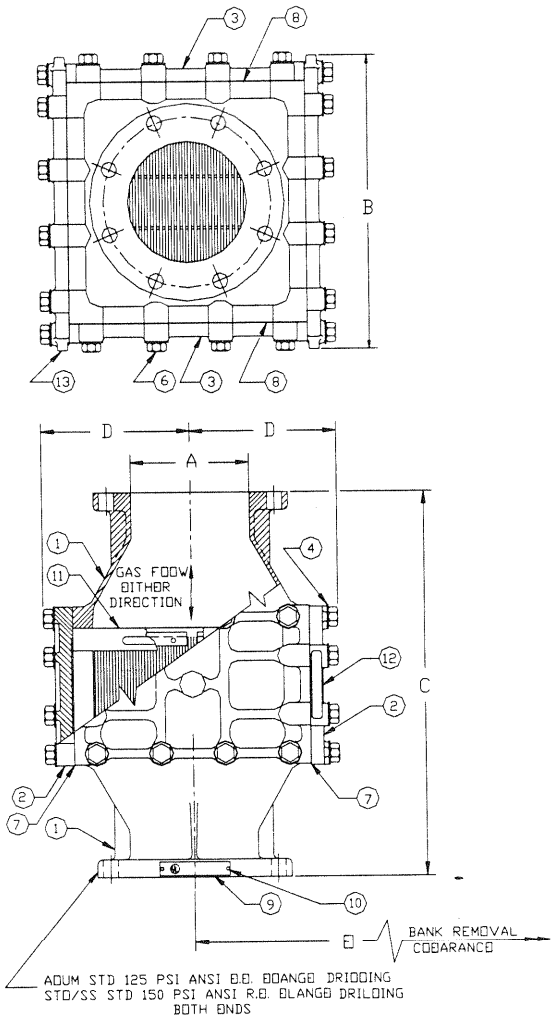

Dimensions					
Size (A)		B	C	D	F
2"	In.	9	12-5/8	4-5/16	19
	MM	229	321	109	483
3"	In.	11-3/4	13-7/8	5-3/4	23-1/4
	MM	298	353	146	591
4"	In.	14-1/2	16-5/8	7-3/8	28-1/8
	MM	368	422	187	715
6"	In.	16-1/2	21-1/2	8-3/8	31-1/8
	MM	419	546	213	791
8"	In.	21-5/8	27-1/4	10-7/8	38-5/8
	MM	549	692	276	981
10"	In.	24	28-3/8	11-7/8	41-5/8
	MM	610	721	302	1057
12"	In.	31	34-3/8	14-5/8	50
	MM	787	873	372	1270

Material Table					
Item	**Description**	**Material**			
		Model	**Model**	**Model**	**Model**
		5000X1	**5000X2**	**5000X3**	**5000X6**
1	End Housing	Aluminum	Aluminum	Steel	316 S.S.
2	Cover Plate	Aluminum	Aluminum	Steel	316 S.S.
3	Side Plate	Aluminum	Aluminum	Steel	316 S.S.
4	Washer	Zn Pl Stl	An Pl Stl	Zn Pl Stl	304 S.S.
6	Cap Screw	Zn Pl Stl	An Pl Stl	Zn Pl Stl	304 S.S.
7	Gasket, Cover Plate	Compressed Non-Asbestos	Compressed Non-Asbestos	Compressed Non-Asbestos	Compressed Non-Asbestos
8	Gasket, Side Plate	Compressed Non-Asbestos	Compressed Non-Asbestos	Compressed Non-Asbestos	Compressed Non-Asbestos
9	U.L. Listing Tag	Aluminum	-	-	-
10	Drive Screw	18-8 SST	18-8 SST	18-8 SST	18-8 SST
11	Bank Assembly	Alum. Ext. Frame/Alum Sheets	Alum. Ext. Frame/316 S.S. Sheets	Fixed 316 S.S. Frame/316 S.S. Sheets	Fixed 316 S.S. Frame/316 S.S. Sheets
12	Cover Tag	Aluminum	Aluminum	Aluminum	Aluminum
13	Rear Plate	Aluminum	Aluminum	Steel	316 SST

Table 1- 5000 Series, Materials of Construction

Figure 2 - 5010 Series Flame Arrester

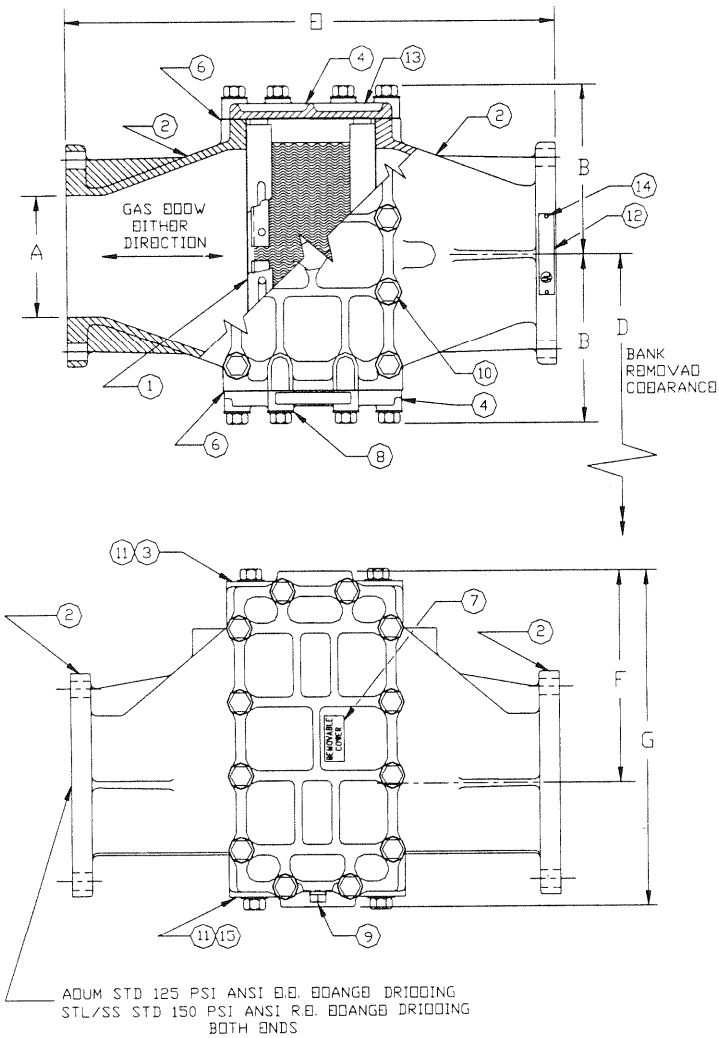

Dimensions						
Size (A)		B	C	D	F	G
2”	In.	4-5/16	18-3/4	14-1/2	5-3/8	9
	MM	110	476	368	137	229
3”	In.	5-5/8	2-7/8	16	7-1/4	11-3/4
	MM	143	581	406	184	298
4”	In.	7	27	20	9	14
	MM	178	686	508	229	356
6”	In.	8-1/4	30-3/4	24-3/8	10-3/4	16-3/8
	MM	210	781	619	273	416
8”	In.	10-3/4	38-1/4	32-1/8	14-3/8	21-5/8
	MM	273	972	816	365	549
10”	In.	11-7/8	41-5/8	35-1/2	16	24
	MM	302	1057	902	406	610
12”	In.	14-1/2	49-1/2	34-3/8	20	31
	MM	368	1257	873	508	787

Material Table					
Item	**Description**	**Material**			
		Model	**Model**	**Model**	**Model**
		5010X1	**5010X2**	**5010X3**	**5010X6**
1	Bank Assembly	Alum. Ext. Frame/Alum Sheets	Alum. Ext. Frame/Alum Sheets	316 S.S. Fixed Frame/316 S.S. Sheets	316 S.S. Fixed Frame/316 S.S. Sheets
2	End Housing	Aluminum	Aluminum	Steel	316 S.S.
3/15	Side Plate	Aluminum	Aluminum	Steel	316 S.S.
4	Cover Plate	Aluminum	Aluminum	Steel	316 S.S.
6	Gasket, Cover Plate	Compressed Non-Asbestos	Compressed Non-Asbestos	Compressed Non-Asbestos	Compressed Non-Asbestos
7	Cover Tag	Aluminum	Aluminum	Aluminum	Aluminum
8	Washer	Zn Pl Stl	Zn Pl Stl	Zn Pl Stl	304 S.S.
9	1/2" NPT Plug	Zn Pl Stl	Zn Pl Stl	Zn Pl Stl	316 S.S.
10	Cap Screw	Zn Pl Stl	Zn Pl Stl	Zn Pl Stl	304 S.S.
11	Gasket, Side Plate	Alum. Ext. Frame/Alum Sheets	Compressed Non-Asbestos	Compressed Non-Asbestos	Compressed Non-Asbestos
12	U.L. Listing Tag	Aluminum	-	-	-
13	Rear Plate	Aluminum	Aluminum	Steel	316 SST
14	Drive Screw	18-8 SST	18-8 SST	18-8 SST	18-8 SST

Table 2 – 5010 Series, Materials of Construction

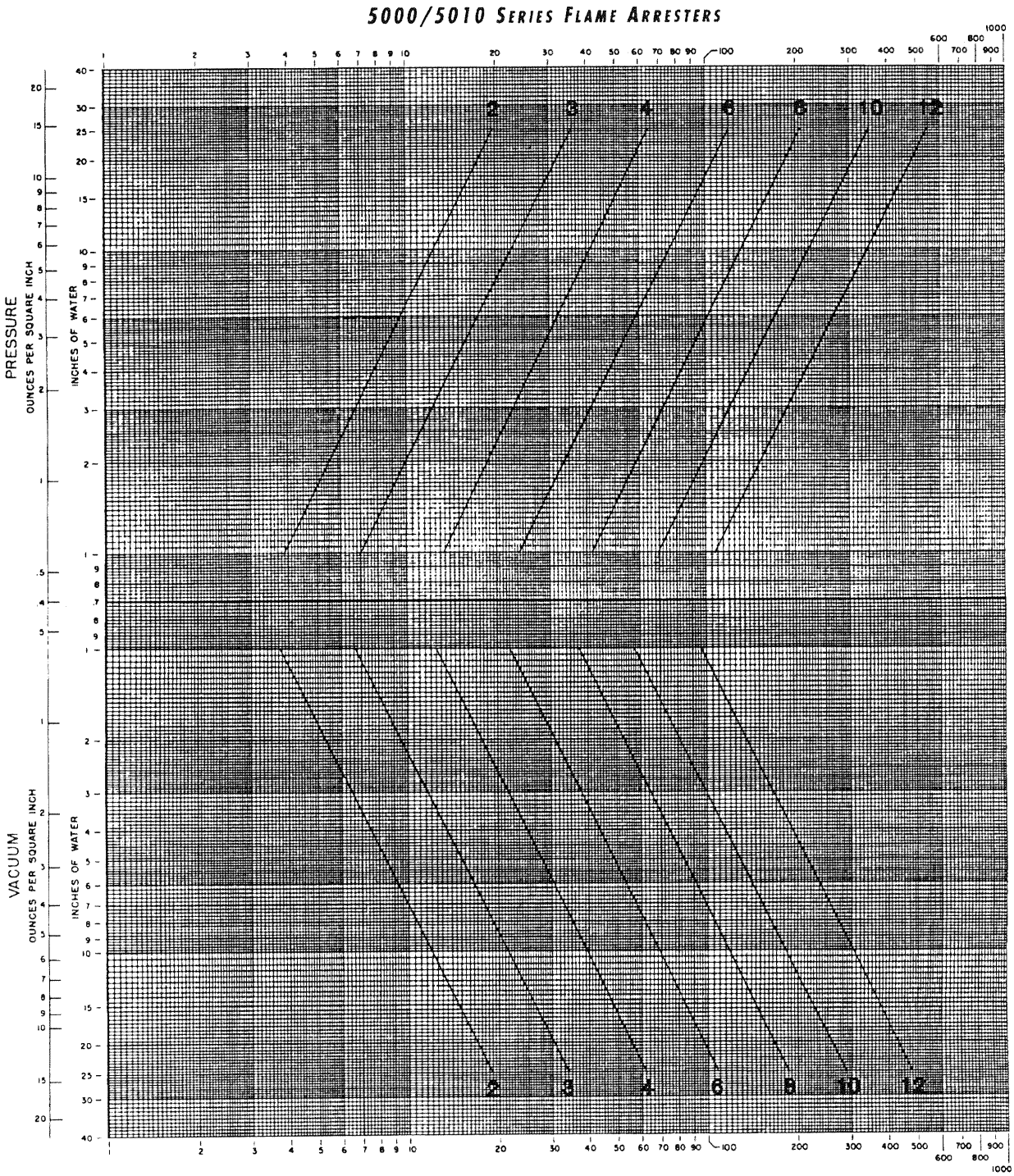

Air Flow (CFH) at 22°C and 14.7 PSIA may be determined as follows.

Multiply Air Flow from chart (SCFH) times the factor 1.0223.

VAREC

REVISIONS

REV.	DESCRIPTION	APPROVAL/DATE
C	ECN #01-1229	S.WILLIS 8-17-01 G.SETZER 9-24-01 D.WYANT 9-24-01

THIS PAGE IS FOR APPROVALS AND REVISION RECORDS OF THE DOCUMENT IN THIS FOLDER. COPIES OF THIS PAGE ARE NOT TO BE DISTRIBUTED WITH THE ASSOCIATED DOCUMENT.

EXCLUDING THIS PAGE, THIS DOCUMENT CONTAINS 15

DWN			INSTALLATION, OPERATION & MAINTENANCE MANUAL FOR 5000/5010 SERIES FLAME ARRESTER		
CHK					
APPR					
APPR					
APPR			SIZE		REV.
APPR			A	33-07765	C

FORM NO. 1500 REV. A 5/93

FLEX-JOINTS

The Flex-Joint is a versatile expansion joint that is designed to handle a wide range of applications involving vibration or thermal movement. The bellows element is made from T-321 stainless steel with 150 lb. carbon steel plate flanges floating on both ends. Floating flanges eliminate the problems of bolt-hole alignment which is often encountered when installing joints with welded flanges. The floating flanges can be rotated for quick and easy bolt-hole alignment. Proper alignment eliminates the possibility of imposing torque on the unit during installation thereby increasing the service life and performance of the joint.

Maximum pressure is 150 psig; maximum temperature is 850 degrees F.

All wetted surface are stainless steel.

Flex-Joints are available with the following options: Control Rods, Liner, Forged Steel Flanges and Stainless Steel Flanges. Hot Dipped, Galvanized Flanges

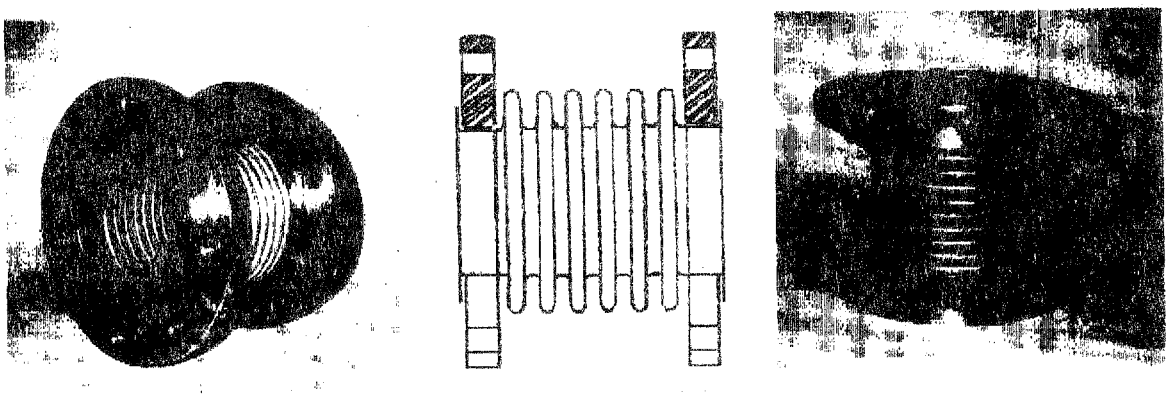

Stock Number	Pipe Size (in.)	Length (in.)	Comp. (in.)	Ext. (in.)	Lat. (in.)	Weight (lbs.)
FJ-200	2	6	1	1/2	1/2	9
FJ-250	2 1/2	6	1	1/2	1/2	10
FJ-300	3	6	1	1/2	1/4	11
FJ-400B	4	7	1	1/2	1/4	14
FJ-500B	5	8	1 1/4	1/2	1/4	21
FJ-600B	6	8	1 1/4	1/2	1/4	24
FJ-800B	8	8	1 1/4	1/2	1/4	47
FJ-1000B	10	8	1 1/2	3/4	1/4	61
FJ-1200B	12	9	1 1/2	3/4	1/4	87
FJ-1400B	14	9	1 1/2	3/4	1/4	101

McMASTER-CARR®

CHICAGO, ILLINOIS

CATALOG

112

Serving industry since 1901

TELEPHONE
(630) 833-0300
(630) 600-3600

INTERNET
www.mcmaster.com

FAX
(630) 834-9427

E-MAIL
chi.sales@mcmaster.com

MAIL
P.O. Box 4355
Chicago, IL 60680-4355

STREET ADDRESS
600 County Line Road
Elmhurst, IL 60126-2081

Expansion Joints

For information about selecting and measuring pipe and fittings, see pages 2-3.
For information about expansion joints, see page 73.

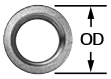

Pipe

Please Read Before Ordering: Pipe size is the accepted industry designation, not the actual measured size. To determine pipe size, first use a ruler to measure the outside diameter (OD) of the pipe, as shown at left. Then, round up the measurement to the closest OD listed in the chart and select the corresponding pipe size. For example, if the OD measures 2⅝", the next highest OD in the chart is 2⅞", and the corresponding pipe size is 2½".

Unthreaded Pipe OD	2"	2½"	2⅞"	3½"	4½"	5⅝"	6¾"	8⅝"	10¾"	12¾"
Pipe Size	1½"	2"	2½"	3"	4"	5"	6"	8"	10"	12"

PFA Expansion Joints with Fixed Flanged Ends

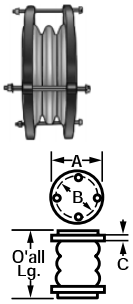

You can transport corrosive fluids with these compact, triple arch joints. They are made of PFA (perfluoroalkoxy fluorocarbon) with ductile iron 150-lb. ANSI flanges coated with a rust inhibitor to resist corrosion. Limit rods in the flanges prevent joint overextension. Vacuum rating is 29.9" Hg. See table for maximum pressure. Temperature range is 0° to 400° F.

Pipe Size	Max. Pressure	O'all Lg.	OD (A)	Bolt Circle Dia. (B)	Flange Thick. (C)	No. of Bolt Holes	Bolt Size	Compression	Extension	Deflection		Each
1½"	99 psi	2"	5"	3⅞"	13/32"	4	½"	½"	½"	¼"	3501K11	$231.82
2"	99 psi	2¾"	6"	4¾"	½"	4	⅝"	¾"	¾"	⅜"	3501K12	295.45
2½"	99 psi	3 3/16"	7"	5½"	9/16"	4	⅝"	¾"	¾"	⅜"	3501K13	311.36
3"	99 psi	3⅝"	7½"	6"	9/16"	4	⅝"	1"	1"	½"	3501K14	363.64
4"	99 psi	3⅝"	9"	7½"	11/16"	8	⅝"	1"	1"	½"	3501K15	472.73
5"	99 psi	4"	10"	8½"	13/16"	8	¾"	1"	1"	½"	3501K16	613.64
6"	99 psi	4"	11"	9½"	13/16"	8	¾"	1⅛"	1⅛"	9/16"	3501K17	663.64
8"	71 psi	6"	13½"	11¾"	1"	8	¾"	1⅛"	1⅛"	9/16"	3501K18	703.64
10"	60 psi	7"	16"	14¼"	1"	12	⅞"	1⅛"	1⅛"	9/16"	3501K19	1116.67
12"	60 psi	7⅞"	19"	17"	1"	12	⅞"	1⅛"	1⅛"	9/16"	3501K21	1333.33

Stainless Steel Bellows Expansion Joints with Loose Flange Ends

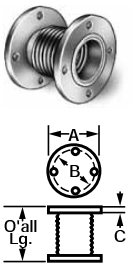

Loose-ring, 150-lb. ANSI flange ends allow easy installation and quick bolt hole alignment; bellowed design compensates for thermal expansion, movement, and misalignment between pipes. Use for high and low temperature applications. Bellows are Type 304 stainless steel with carbon steel flange ends. Vacuum rating is 29" Hg. Maximum pressure is 150 psi. Maximum temperature is 850° F.

Pipe Size	O'all Lg.	OD (A)	Bolt Circle Dia. (B)	Flange Thick. (C)	No. of Bolt Holes	Bolt Size	Compression	Extension	Deflection		Each
2"	6"	6"	4¾"	⅝"	4	¾"	15/16"	5/16"	⅜"	9413K61	$141.84
2½"	6"	7"	5½"	⅝"	4	¾"	15/16"	5/16"	5/16"	9413K62	173.33
3"	6"	7½"	6"	⅝"	4	¾"	15/16"	5/16"	¼"	9413K63	186.44
4"	6"	9"	7½"	⅝"	8	¾"	15/16"	5/16"	3/16"	9413K64	221.11
5"	6"	10"	8½"	¾"	8	⅞"	15/16"	5/16"	3/16"	9413K65	272.22
6"	6"	11"	9½"	¾"	8	⅞"	15/16"	5/16"	⅛"	9413K66	297.78
8"	6"	13½"	11¾"	1"	8	⅞"	1"	⅜"	⅛"	9413K67	422.22
10"	8"	16"	14¼"	1"	12	1"	1¼"	⅜"	⅛"	9413K68	517.78
12"	8"	19"	17"	1"	12	1"	1¼"	⅜"	⅛"	9413K69	711.11

Butt-Weld Bellows Expansion Joints

Bellowed design compensates for thermal expansion, movement, and misalignment when joining pipe. Bellows are made of Type 321 stainless steel with carbon steel butt-weld ends. Ends are beveled. Vacuum rating is 29" Hg. Maximum pressure is 150 psi. Maximum temperature is 800° F.

Pipe Size	O'all Lg.	Compression	Extension	Deflection		Each
3"	5"	13/32"	11/64"	1/16"	5254K11	$183.33
4"	6"	19/32"	17/64"	1/16"	5254K12	190.00
5"	7½"	19/32"	17/64"	1/16"	5254K13	235.56
6"	9"	51/64"	11/32"	1/16"	5254K14	281.11
8"	8½"	51/64"	11/32"	1/16"	5254K15	355.56
10"	9½"	51/64"	7/16"	1/16"	5254K16	364.00
12"	8"	51/64"	11/32"	1/16"	5254K17	462.00

PVC Slip-On Expansion Joints with Clamps

Made of PVC, these joints absorb thermal contraction and expansion in low-pressure drain, waste, and vent systems. Leakproof and distortion-free, they have internal stops for positive positioning and single-arch construction. Band clamps are Type 301 stainless steel. Maximum pressure is 4.3 psi. Maximum temperature is 120° F. Not rated for vacuum service. For vertical use only.

Pipe Size	O'all Lg.	Compression	Extension	Deflection		Each
1½"	4"	½"	1½"	¼"	48345K25	$8.48
2"	4"	½"	1½"	¼"	48345K26	9.64
3"	4"	½"	1½"	⅜"	48345K27	10.42
4"	4"	½"	1½"	⅜"	48345K28	13.12

Neoprene Slip-On Expansion Joints with Clamps

Just slip these neoprene joints over pipe ends and tighten the band clamps. With a triple arch for extra flexibility, these nylon-impregnated joints have Type 316 stainless steel T-bolt band clamps. Joints also have internal and external reinforcing rings that prevent deformation during surges and negative pressure. Overall length is 7". Vacuum rating is 20" Hg. Temperature range is −20° to +225° F. **Also Available:** Silicone triple-arch joints. Temp. range is −75° to +500° F. Please ask for 54345K1 and specify pipe size.

Pipe Size	Compression	Extension	Deflection	Max. Pressure, psi		Each
2"	1"	½"	⅝"	150	5428K14	$190.88
2½"	1"	½"	⅝"	150	5428K16	194.59
3"	1"	½"	⅝"	150	5428K18	197.06
3½"	1"	½"	⅝"	150	5428K23	228.81
4"	1"	½"	⅝"	150	5428K25	237.29
4½"	1"	½"	⅝"	150	5428K27	243.05
5"	1"	½"	⅝"	150	5428K29	$244.35
6"	1"	½"	⅝"	150	5428K33	269.56
8"	1"	½"	⅝"	150	5428K37	282.32
10"	1"	½"	⅝"	150	5428K41	311.76
12"	1"	½"	⅝"	150	5428K45	337.51

McMASTER-CARR®

CHICAGO, ILLINOIS

open 24 hours 7 days a week

TELEPHONE	(630) 833-0300 (630) 600-3600
TELÉFONO (ESPAÑOL)	(630) 833-7100
INTERNET	www.mcmaster.com
FAX	(630) 834-9427
TTY FOR THE HEARING IMPAIRED	(630) 834-8844
E-MAIL	chi.sales@mcmaster.com
MAIL	P.O. Box 4355 Chicago, IL 60680-4355
STREET ADDRESS	600 County Line Rd. Elmhurst, IL 60126-2081

Additional Locations

Atlanta

Mail	Street Address	Telephone	(404) 346-7000
P.O. Box 740100	6100 Fulton Industrial Blvd.	Fax	(404) 349-9091
Atlanta, GA 30374-0100	Atlanta, GA 30336-2852	E-Mail	atl.sales@mcmaster.com

Cleveland

Mail	Street Address	Telephone	(330) 995-5500
P.O. Box 94930	200 Aurora Industrial Pkwy.	Fax	(330) 995-9600
Cleveland, OH 44101-4930	Aurora, OH 44202	E-Mail	cle.sales@mcmaster.com

Los Angeles

Mail	Street Address	Telephone	(562) 692-5911
P.O. Box 54960	9630 Norwalk Blvd.	Fax	(562) 695-2323
Los Angeles, CA 90054-0960	Santa Fe Springs, CA 90670-2932	E-Mail	la.sales@mcmaster.com

New York City — Philadelphia

Mail	Street Address	Telephone	(732) 329-3200
P.O. Box 440	473 Ridge Rd.	Fax	(732) 329-3772
New Brunswick, NJ 08903-0440	Dayton, NJ 08810-0317	E-Mail	nj.sales@mcmaster.com

Terms and Conditions

TERMS. BY PURCHASING FROM US, YOU AGREE TO THESE TERMS AND CONDITIONS. No other terms shall apply except as agreed in writing signed by us. We reserve the right to correct typographic errors and reject orders.

PRICES; PAYMENT. Prices, title and risk of loss are F.O.B. our warehouse. Prices don't include taxes or shipment and may be changed without notice. Payment due within 30 days of shipment, net on open account less 2% for payment within 10 days of shipment. Visa, MasterCard, and American Express accepted for net invoice amount. Credit card arrangements subject to change. Open accounts available on approval.

RETURNS. If shipment appears damaged, don't pay freight unless damage is marked on bill by carrier. No return authorization required.

LIMITED WARRANTY. Our only warranty obligation is to replace any item proved defective in material or workmanship. ALL OTHER WARRANTIES, EXPRESS OR IMPLIED, INCLUDING WITHOUT LIMITATION THE IMPLIED WARRANTIES OF MERCHANTABILITY AND FITNESS FOR PURPOSE, ARE DISCLAIMED.

LIABILITY. WE SHALL NOT BE LIABLE IN CONTRACT, WARRANTY, TORT OR OTHERWISE FOR CONSEQUENTIAL, SPECIAL, EXEMPLARY OR INCIDENTAL DAMAGES. IN NO EVENT SHALL OUR LIABILITY EXCEED THE PURCHASE PRICE. ENFORCING THE LIMITED REPLACEMENT RIGHTS IS YOUR EXCLUSIVE REMEDY.

INFORMATION. Information about products is as provided by our supplier. We make no warranty or representation concerning such information. SOME PRODUCTS SOLD BY US CONTAIN INGREDIENTS KNOWN TO THE STATE OF CALIFORNIA TO CAUSE CANCER AND BIRTH DEFECTS OR OTHER REPRODUCTIVE HARM. UPON REQUEST, WE WILL FURNISH YOU WITH MATERIAL SAFETY DATA SHEETS FOR HAZARDOUS SUBSTANCES AS DEFINED BY OSHA AND A LIST OF PRODUCTS OR SUBSTANCES KNOWN BY THE STATE OF CALIFORNIA TO CAUSE CANCER OR REPRODUCTIVE HARM.

OBLIGATIONS. You warrant, represent and agree: (1) to comply with all laws; (2) that our sale and shipment of the product will not, by export thereof, your legal status or otherwise, cause us to violate any law; and (3) to indemnify us against any losses from a failure by you or a third party to comply with law or these terms and conditions, or from use of the product.

VERIS Verabar®

Regular Models

Differential Pressure Flow Sensors

V100 & V110 Compression Fitting

The Most Accurate and Reliable Technology for Measuring Gas, Liquid and Steam…

Developed from aerospace technology, the *Verabar*® averaging pitot flow sensor provides unsurpassed accuracy and reliability. With its solid, one-piece construction and bullet shape, the *Verabar* makes flow measurement leak proof and precise.

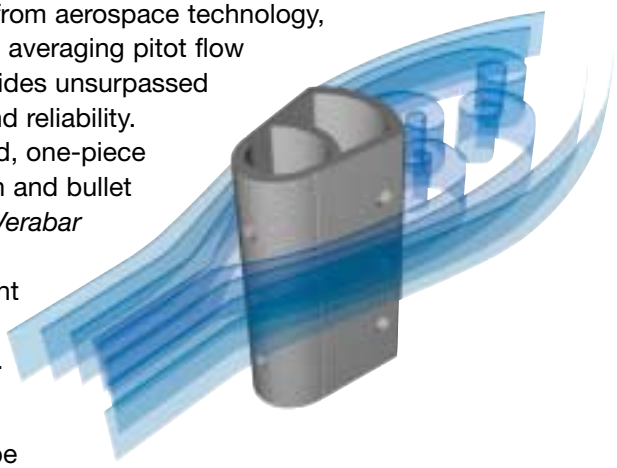

The unique sensor shape reduces drag and flow induced vibration. The location of the low-pressure ports eliminates the potential for clogging and improves signal stability.

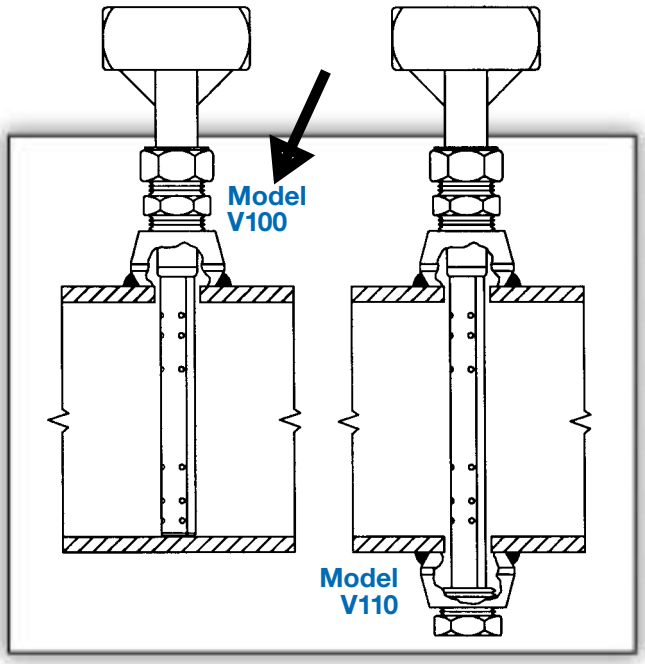

V100 Single Support V110 Opposite Support	
Pipe Connection	Threaded (NPT)
Mounting Type	Tube fitting
Features and Benefits	• Most cost effective model • Installed in less than one hour • Low and medium pressures
Applications	• Pipes (steel, PVC, FRP, copper) • Air (compressed, combustion) • Natural gas • Stack/flue gas • Water (raw, cooling, feedwater) • Low pressure steam • Non-hazardous fluids
Special Designs—Consult Factory	• Custom mounting, lengths, materials, instrument connections, etc. • Short straight run

Temperature Pressure Limits (ANSI Class)
300#
720 psig @ 100°F (49.6 Bars @ 38°C)
330 psig @ 800°F (22.8 Bars @ 426°C)
600#
1440 psig @ 100°F (99.3 Bars @ 38°C)
660 psig @ 800°F (45.5 Bars @ 426°C)

Model Specifications	V100 and V110	
Sensor Code	**05**	**10**
Sensor Diameter	7/16” (11mm)	7/8” (22mm)
ANSI Class	600#	300#
Pipe Size	2”- 6” (50mm-150mm)	6”- 48” (150mm-1200mm)
Instrument Connection	1/2” NPT	1/2” NPT or Direct Mount
Components Furnished	Weld coupling, tube fitting; V110 includes additional weld coupling and plug	
Weld Coupling Size	3/4” NPT	1” NPT

Verabar® Regular Models

V100 (Single Support)

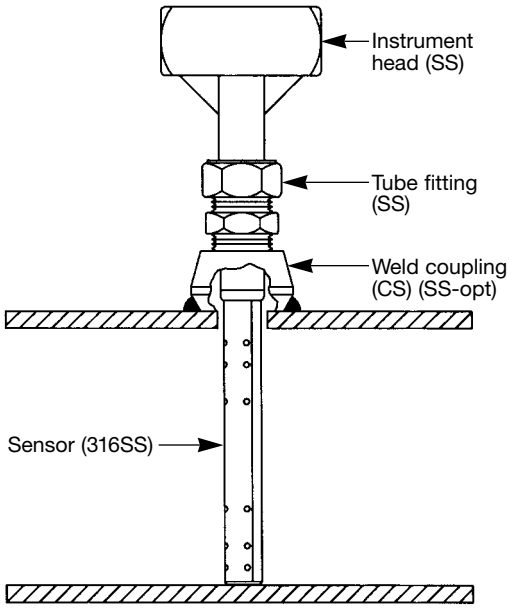

V110 (Double Support)

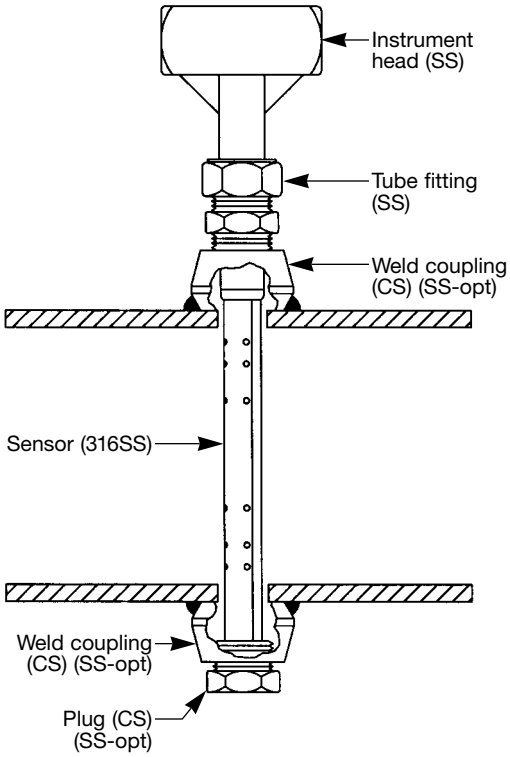

Furnish the following information:

1. Enter Pipe Dimensions or Duct Dimensions

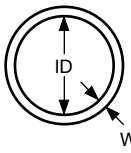

Pipe Size _____ Sch _____

Pipe ID _____ and

Wall _____ Pipe Mat'l _____

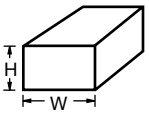

Dimension Verabar spans (H) or (W)

Height (H) _____

Width (W) _____

Wall _____

Duct Mat'l _____

2. Pipe or Duct Orientation

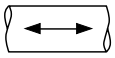

(H) Horizontal

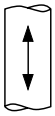

(V) Vertical

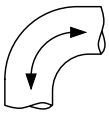

Short Straight Run
Consult Factory

3. Enter Flow Conditions

Fluid Name:		Maximum	Normal	Minimum	Units
Flow Rate					
All Fluids	Temperature @ Flow				
	Pressure @ Flow				
Gas	Specific Gravity, or Molecular Weight				
Liquid	Specific Gravity				
Steam	Veracalc Program can calculate Density from Temperature and Pressure				

4. Select Model from page 3.

Use the Ordering Information table on page 3 to determine your model number.

5. Flow Calculation

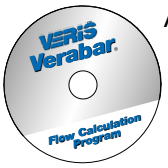

All Verabar applications require a flow calculation to verify the DP, pressure and temperature limits, structural limits and to size the transmitter. The Veracalc PC Program is for use by representatives and end users. It is easy to operate and ***includes steam tables.***

Ordering Information

Model	Regular
V100	Compression Fitting (Single Support)
V110	Compression Fitting (Double Support)

Pipe Size and Schedule or Exact ID and Wall Thickness

Code	Sensor Pipe Size Range
05	2” to 6” (50mm to 150mm)
10	6” to 48” (150mm to 1200mm)

Code	Pipe Orientation
H	Horizontal
V	Vertical

Instrument Connections (Select Remote or Direct Mount)
(Transmitter sold separately; see Field Flow Systems literature)

Remote Mount Transmitter (1/2” NPT)				Direct Mount Transmitter (Flanged 250°F/120°C Max.)			
Parallel	Regular	RTD*	Valve	Transmount	Mass Transmount*		Manifold
		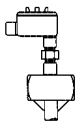 Explsn. Proof	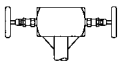 Integral	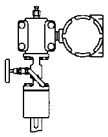	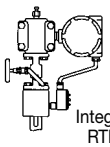 Integral RTD	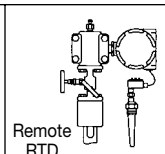 Remote RTD	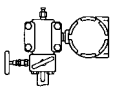 Integral
P	**R**	**D**	**T**	**F**	**G**	**E**	**M**

Instrument Valves (Opt.)		Manifolds (Optional)			
Remote Mount		Direct Mount			
Needle	Gate	3-Valve		5-Valve	
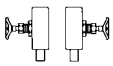 1/2” NPT	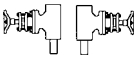 1/2” NPT	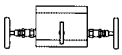 Soft Seat	Hard Seat	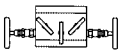 Soft Seat	Hard Seat
C2NC (CS) **C2NS** (SS)	**C2GC** (CS) **C2GS** (SS)	**F3SC** (CS) **F3SS** (SS)	**F3HC** (CS) **F3HS** (SS)	**F5SC** (CS) **F5SS** (SS)	**F5HC**(CS) **F5HS** (SS)

Optional

Code	Options
WNS	For stainless steel pipes. For V100, furnished with one SS weld coupling. For V110, furnished with two SS weld couplings and one SS plug.

V110	**8”sch40**	**10**	**H**	**R**	**C2NC**	**Typical Model Number**

* For high pressure (>500psig) and high temperature (>500°F) remote mount RTD in a thermowell is preferred.

REMOTE MOUNT	PARALLEL	REGULAR	RTD	VALVE	VALVES	NEEDLE	GATE
	1/2" NPT	1/2" NPT	X PROOF	INTEGRAL		1/2" NPT	1/2" NPT
CODE	P	R	D	T		C2NC (CS) C2NS (SS)	C2GC (CS) C2GS (SS)

DIRECT MOUNT	TRANSMOUNT	MASS TRANSMOUNT		MANIFOLD	MANIFOLDS			
					3- VALVES		5-VALVES	
		INT RTD	RMT RTD	INTEGRAL	SOFT SEAT	HARD SEAT	SOFT SEAT	HARD SEAT
CODE	F	G	E	M	F3SC (CS) F3SS (SS)	F3HC (CS) F3HS (SS)	F5SC (CS) F5SS (SS)	F5HC (CS) F5HS (SS)

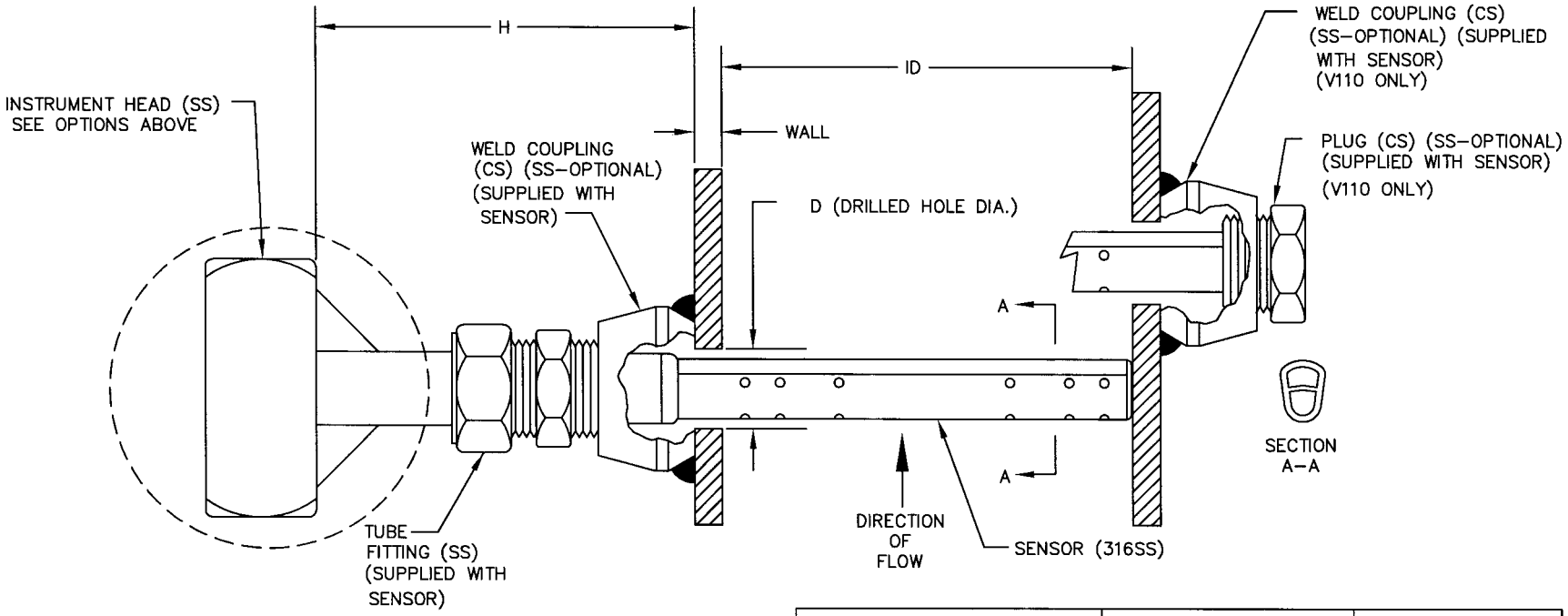

ITEM	SENSOR –05	SENSOR –10
ANSI RATING	CLASS 600#	CLASS 300#
SENSOR DIA.	7/16" (11mm)	7/8" (22mm)
DIM 'D' DRILLED HOLE DIAMETER	1/2" (13mm)	1" (26mm)
FITTING SIZE	5/8" TUBE X 3/4" NPT	1" TUBE X 1" NPT
COUPLING SIZE	3/4" NPT	1" NPT
DIM 'H'	4.0" (102mm)	5.5" (140mm)

CUSTOMER: _____

PROJECT: _____

ORDER NO: _____

TAG NO: _____

PIPE SIZE & SCHEDULE: _____

CATALOG NO: _____

SERIAL NO: _____

CERTIFIED BY: _____ DATE: _____

VERIS, inc.
6315 MONARCH PARK PLACE
NIWOT, CO 80503
PHONE: 303–652–8550
FAX: 303–652–8552

VERABAR MODEL: V100/110
TUBE FITTING, THREADED

DATE 09/20/01	DWG NO. SUB–3934	
SCALE NTS	REV A	PAGE 1 OF 1

ISO 9001:2000
PSS-100 (5/03) Rev.B
Printed in USA

True Performance in DP Flow Measurement

VERIS, inc.
6315 Monarch Park Place • Niwot, CO 80503 USA • Phone: 303-652-8550 • Fax: 303-652-8552
E-Mail: contact@veris-inc.com • Website: www.veris-inc.com

1.0 SCOPE

These instructions provide procedures for installing the V100 Verabar flow sensor. Procedures are given for all industrial flow measurement applications including liquid, steam and gas service for both horizontal and vertical piping configurations.

2.0 RECEIVING INSPECTION

The following tasks should be performed as part of the receiving inspection procedure:

- Check items received against the packing list.
- Check sensor nameplate for proper model number, serial number and customer number.
- Verify that the actual pipe diameter matches the ID stated on the sensor nameplate.
- Check the bullet shaped sensor tube for any signs of damage. Damage to the sensor tube may result in erroneous flow readings.
- Check the round cover tube for any damage, especially axial gouges or scratches. Damage to the cover tube may prevent the ferrule from sealing properly.

3.0 SAFETY PRECAUTIONS

The following tasks should be conducted prior to installing the Verabar flow sensor:

- Check maximum operating conditions on the flow sensor nameplate and verify that they exceed the maximum conditions of the installation. If any pressure, temperature or flow limits will be exceeded, consult the factory before proceeding.
- Check that the pipe is depressurized and drained prior to installation.
- Check that all pressure containing components are properly installed and tightened prior to pressurizing the system.

4.0 INSTALLATION PREPARATIONS

4.1 Location

For the most accurate flow measurement, a minimum straight run of pipe is required. Table 1 shows the minimum straight run requirements. If longer straight runs are available, position the Verabar such that the ratio of upstream straight run to downstream straight run is approximately 4 to 1. If straight run lengths are less than the values stated in Table 1, consult the factory for additional accuracy and location information. For additional piping configurations, see Drawing SUB-4521.

Position straightening vanes such that the end closest to the Verabar is half way between the Verabar and the closest upstream configuration. For elbow installations, mount the Verabar in the same plane as the closest upstream elbow.

4.2 Orientation

Verify the proper sensor orientation by checking for an "-H" (horizontal piping) or a "-V" (vertical piping) in the model number on the Verabar name plate.

Piping Configuration		Dimension –A–		Dimension –B–
		Without Straightening Vanes	With Straightening Vanes	
Elbow	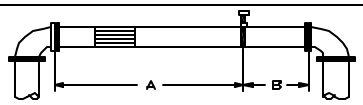	7	7	3
Multiple Elbows in the Same Plane	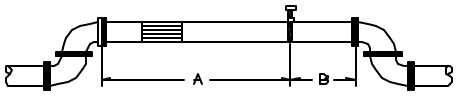	9	9	3
Multiple Elbows in Different Planes	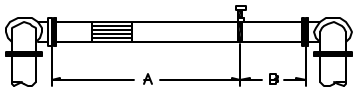	18	9	3
Reduction in Pipe Size	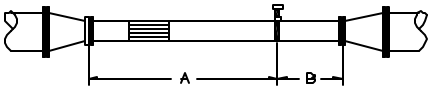	8	8	3
Increase in Pipe Size	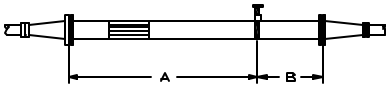	8	8	3
Control Valve	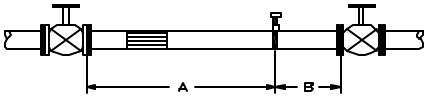	24	9	4

Table 1. Straight Run Requirements

4.2.1 Horizontal Piping

For air or gas installations, mount the Verabar in the upper 160° of the pipe to allow any condensate to drain into the pipe (Figure 1). For liquid or steam installations, mount the Verabar in the lower 160° of the pipe. This allows any entrained air to bleed back into the pipe for liquid applications and allows condensate to collect in the instrument piping for steam applications.

4.2.2 Vertical Piping

The Verabar may be mounted in any location around the circumference of the pipe for any vertical piping applications (Figure 1).

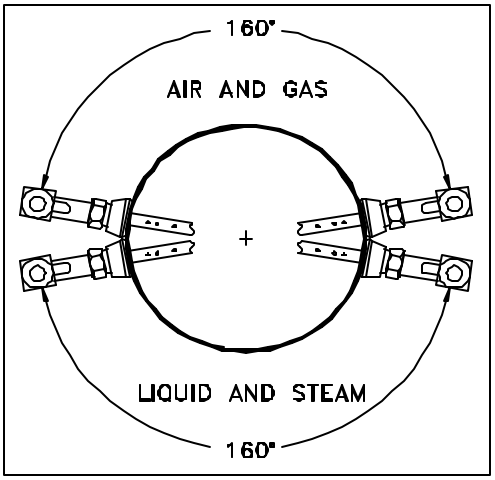

Figure 1. Verabar Orientation in Horizontal Pipe

4.3 DP Transmitter/Local Indicator Location

When choosing a Verabar location, consider the DP transmitter/local indicator location:

- The transmitter must be mounted below the Verabar for liquid and steam applications.
- The transmitter must be mounted above the Verabar for air and gas applications.

4.4 Installation Drawings and Bill of Materials

Additional information is available in the Installation Drawings and Bill of Materials VB-7061 (also on the VeraData CD). It contains standard and alternate transmitter locations and a complete bill of materials based on the fluid type and sensor orientation on the pipe.

5.0 INSTALLATION PROCEDURE

5.1 Drill Hole in Pipe

- Completely depressurize and drain pipe prior to installation of the Verabar.
- Mark the location of the hole through which the Verabar will be mounted. Use a center punch to mark the hole to prevent the drill bit from walking on the pipe.
- Drill the pipe with the proper sized hole per the following table:

Sensor Size	Hole Dia
V100-05	1/2" (13mm)
V100-10	1” (25mm)

- Deburr the hole on the inside of the pipe.

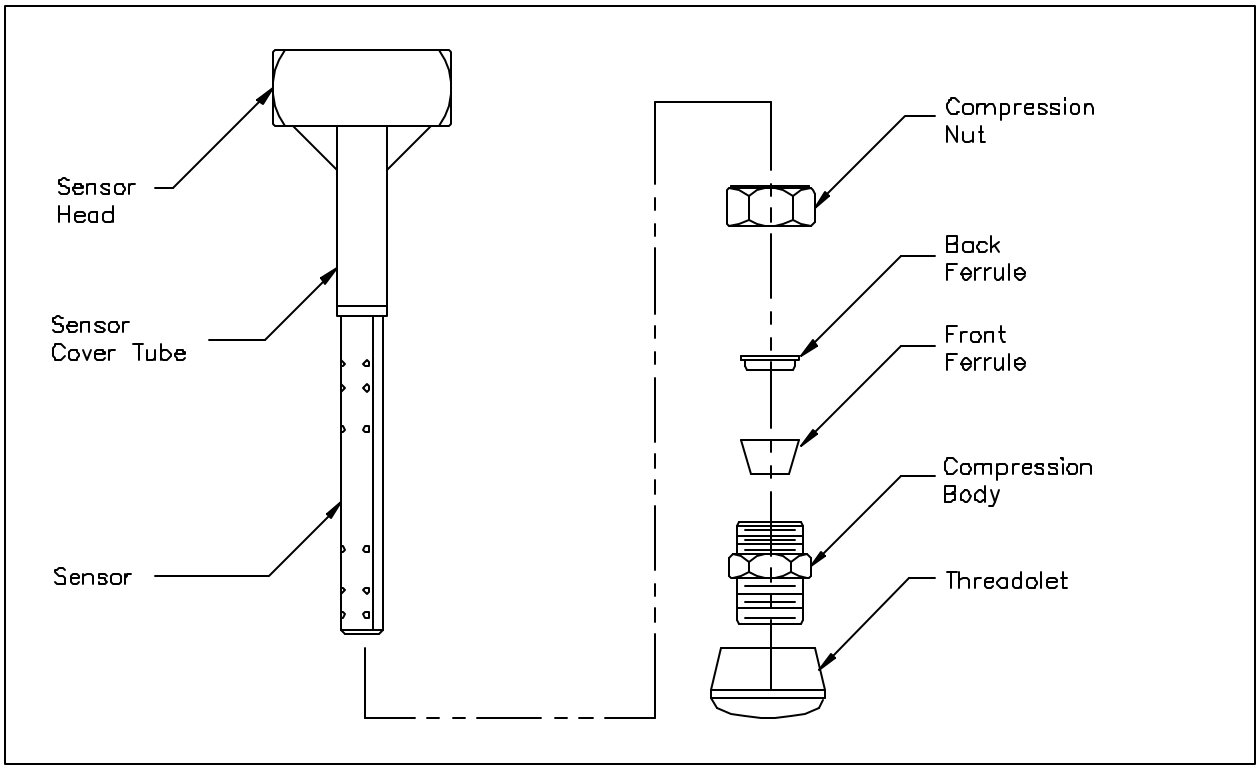

Figure 2. Verabar Model V100

5.2 Weld Threadolet to Pipe

- Loosely assemble the sensor, compression nut, back ferrule, front ferrule and compression body to the threadolet (hand tight) and insert the sensor assembly into the pipe. The back ferrule and front ferrule must be in the proper sequence and orientation as shown in Figure 2.
- Using the appropriate weld gap (1/16" [1.5mm] typical), tack weld the threadolet into position (Figure 3).

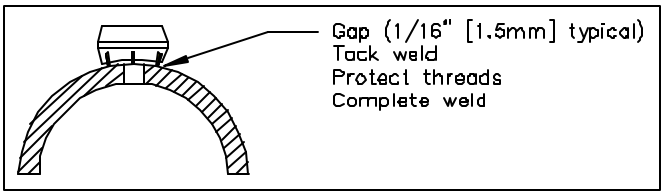

Figure 3. Weld Gap

- Remove the sensor, protect threads on the threadolet and finish welding the threadolet to the pipe per applicable piping codes.

5.3 Insert Sensor

- Using appropriate pipe thread sealant, install (completely tighten) the compression body into the threadolet.
- Slide the compression nut, back ferrule, then front ferrule, onto the sensor cover tube. **The back ferrule and front ferrule must be in the proper sequence and orientation as shown in Figure 2.** The back ferrule must be next to the compression nut with the tapered end pointing toward the front ferrule. The tapered end of the front ferrule must point towards the compression body.
- Slide the sensor, with compression nut and ferrules attached, into the compression body (do not tighten).
- Align the head of the sensor so that the arrow labeled "flow" on the head is in the direction of the flow in the pipe to within 3° (Figure 4). Maintain the head in this position for the remainder of the operations.
- **While pushing the sensor against the opposite wall with a force of at least 50 lbs (22kg), tighten the compression nut 1-1/4 turns past hand tight.** This prevents vibration caused by the end of the probe lifting off the opposite wall of the pipe. A come-along, band clamp or strap wrench may be used for this operation.
- Reverify the alignment of the sensor such that the arrow labeled "flow" on the head is in the direction of the flow in the pipe to within 3° (Figure 4). A crescent wrench or pipe wrench can be applied to the head of the sensor to make alignment adjustments.

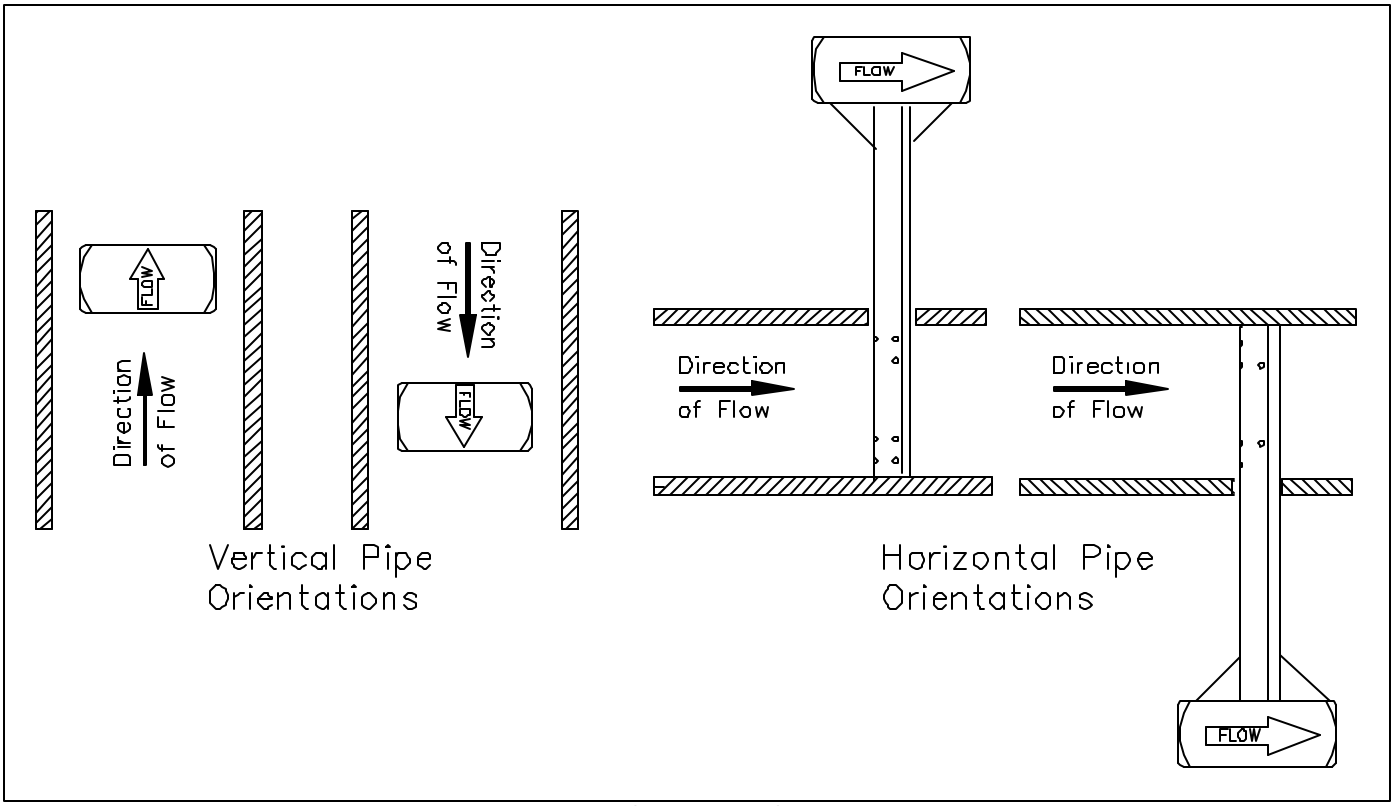

Figure 4. Orientation of Flow Arrow

5.4 Insert Instrument Valves or Manifold

5.4.1 Valves

If the Verabar does not have a valve head, install instrument valves using proper thread sealant. Be sure instrument shut-off valves are installed and shut prior to repressurizing the pipe.

5.4.2 Manifold

If the Verabar has a direct or integral manifold, be sure the high and low pressure block valves are shut off prior to repressurizing the pipe.

The Verabar is now properly installed (Figure 5).

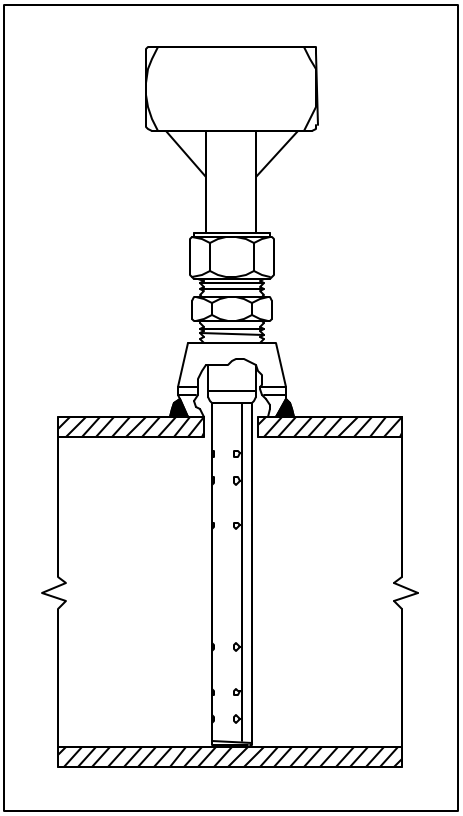

Figure 5. Installed V100

Periodic Maintenance

The assembly should be periodically checked. Verify that no leaks are present.

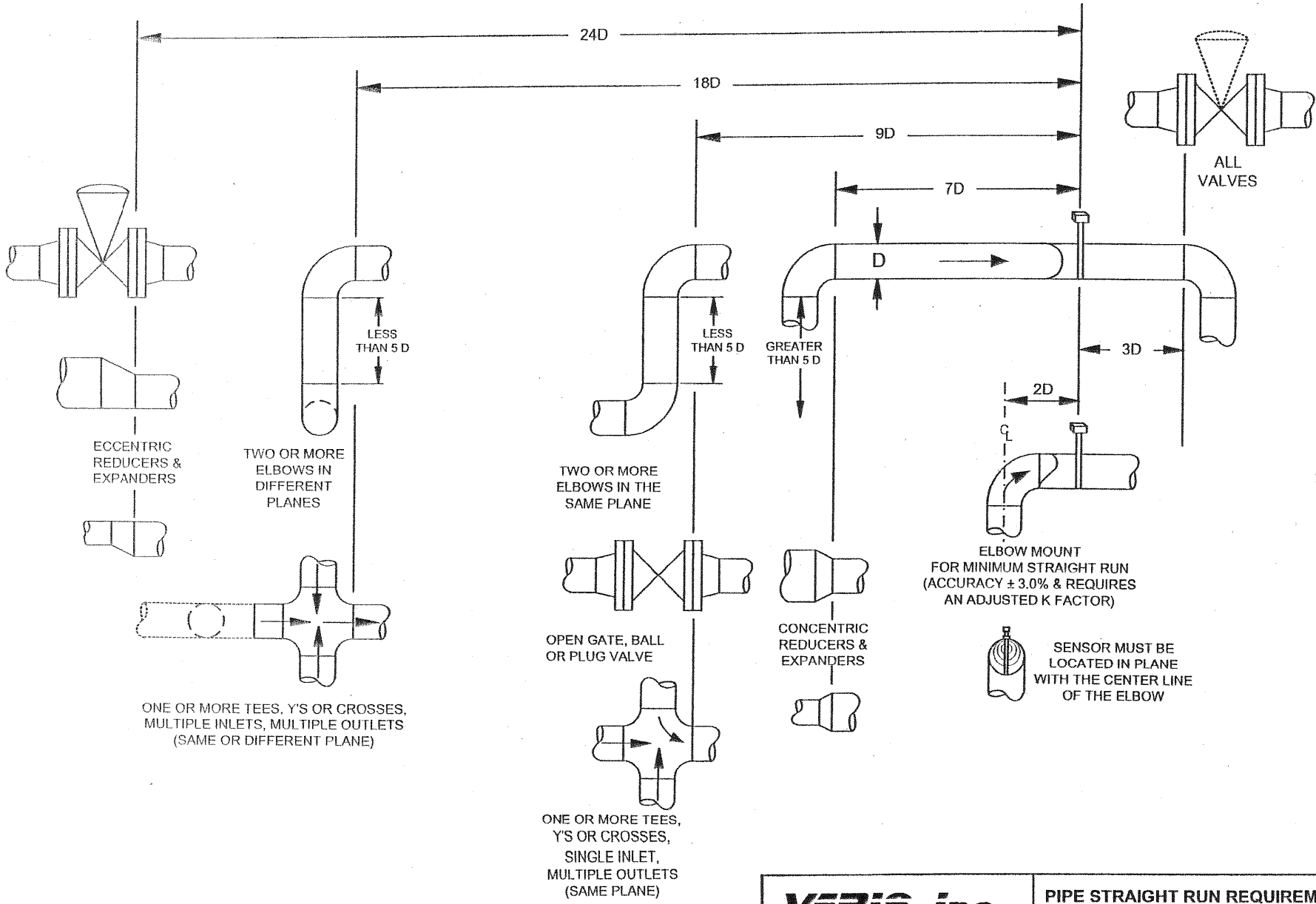

VERIS, inc.
6315 MONARCH PARK PLACE
NIWOT, CO 80503
PH: 303-652-8550
FX: 303-652-8552

PIPE STRAIGHT RUN REQUIREMENTS EXPRESSED IN PIPE DIAMETERS (D)

DATE	12/7/02	DWG NO.	SUB-4521
SCALE	N.T.S.	REV A	PAGE 1 OF 1

FLUID TYPE	TRANSMITTER
GAS	**DIRECT**
PIPE OR DUCT ORIENTATION **HORIZONTAL**	
VERABAR HEAD **M**	SYSTEM CODE(S) **TD, MDS**
INSTALLATION **RECOMMENDED**	

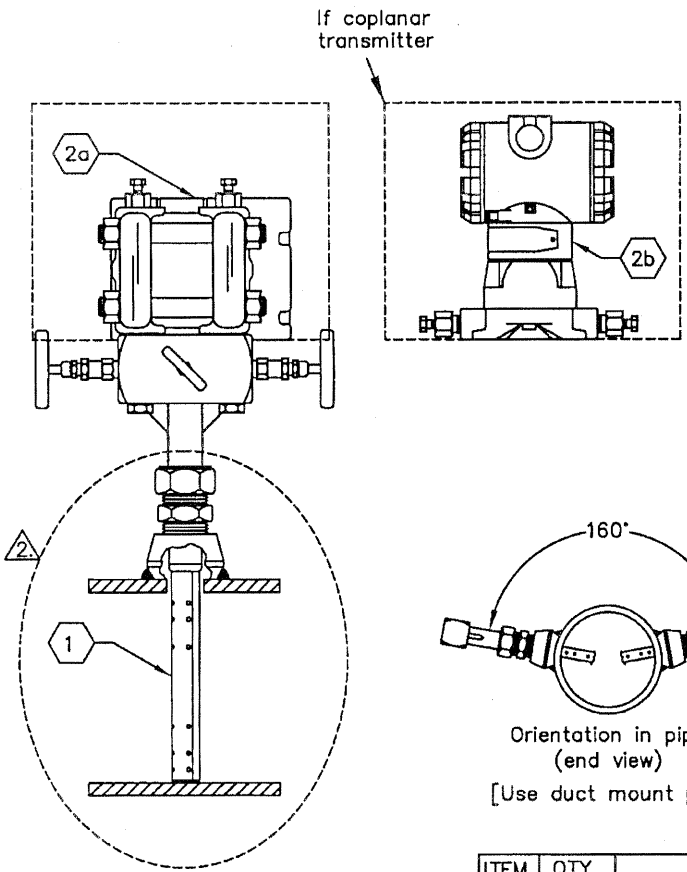

Verabar size	Hole size in pipe/duct
−05	1/2" (13mm)
−10	1" (26mm)
−15	1 1/2" (38mm)

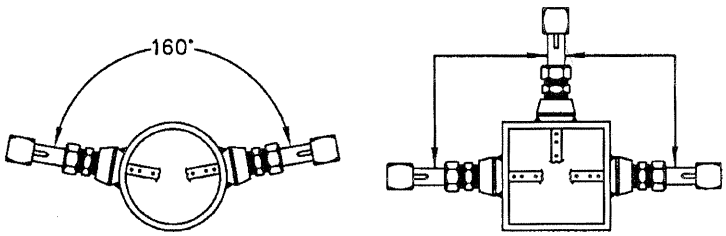

Orientation in pipe (end view)

Orientation in duct (end view)

[Use duct mount plate if duct wall less than .1in. (2.5mm)]

ITEM	QTY	DESCRIPTION
1	1	Verabar sensor with pipe mounting hardware
2a	1	Differential pressure transmitter, traditional style
2b		Differential pressure transmitter, coplanar style

NOTES

1. Mounting on the top of the pipe or duct as shown is recommended. Contact Veris if an alternate installation is required.

2. Verabar model V100 shown, other models available.

VERIS, inc.

6315 Monarch Park Place
Niwot, CO 80503 USA
Phone: (303) 652-8550
Fax: (303) 652-8552
www.veris-inc.com

RECOMMENDED INSTALLATION DRAWING

DATE 10-14-03	DWG NO. FFS-072
SCALE N.T.S.	REV C / PAGE 1 OF 1

ADDITIONAL INSTRUCTIONS ON CALIBRATION OF THE ULTRAMAT 23

General instructions on calibration or Siemens ultramat 23 analyzer utilized on landfill gas

The general setup of the analyzer in the field includes balancing pressures the gasses entering the analyzer are treated in such a way to remove water and particulates' from the sample before analysis by the analyzer. The pressure is reduced to between 2-3 PSI by the inlet regulator (labeled sample in). If the analyzer system if equipped with sample return there will be second gage this second gage and the associated controls labeled (sample out). These controls should be used to adjust the outlet pressure to zero PSI. If the pressure is higher than "zero" the methane and oxygen readings will be higher than Actual. Conversely if the reading on the outlet gage is less than "zero" the methane and oxygen readings will be lower than actual.

Calibration gasses enter the analyzer through any of the 3 ports located on the side of the analyzer cabinet these are labeled "zero", "oxygen" and "methane" It is not necessary to use all of the ports these are supplied for convenience.

The calibration gasses connected to these ports would typically be:

ZERO PORT- Nitrogen (zero grade) regulated to less than 400 PSIG

OXYGEN PORT- bottled oxygen usually 1-2% regulated to less than 400 PSIG

METHANE PORT- a mixture of 50%methane, 50% CO_2 regulated to less than 400PSIG.

There is also an additional port (labeled "VENT") this is utilized when the "CAL" button is pressed, when this button is pressed air is drawn into the analyzer in leu of sample and the methane channel is zeroed on this air as the oxygen channel is calibrated to 20.9%. (be aware that any gasses in the ambent air being drawn into this (VENT) port will be subtracted from your analysis).

Also note that the gasses used to calibrate the analyzer should be introduced into the analyzer at the exact same pressures and flows as the sample gas being analyzed (there is a regulator in the bottom section of the analyzer for the purpose of adjusting these pressures).

NOTE: The next section (autocal Drift) needs to be set if the calibration of the analyzer is blocked:
(I will set this for Quantity 1 and Limit 99%)

5.10.2.2 Configuration: Special Functions: AUTOCAL Drift

You can use this dialog to define the conditions under which the drift of an AUTOCAL procedure triggers a maintenance request. The adjustable parameters are:

S **Quantity:** The number of AUTOCAL procedures up to setting of a new reference value (4 in this case)

S **Limit:** The highest value in % of the smallest measuring range (max. 99%) by which the calibration may deviate from the reference value (6 % in this case. See also Section 5.7.1.3).

This section describes the calibration menus in the analyzer

5.8 Calibration

Using this function it is possible to calibrate the IR channels of the ULTRAMAT 23 using one or more calibration gases, and to reset the sensitivity. In addition, you can calibrate the oxygen sensor and the pressure sensor and also define the AUTOCAL parameters.

Calibration is only possible if you have enabled code level 1. (THE CODEs are "111" and "222")

5.8.1 Calibration: Calibrate IR Channels

In this menu you can:

S Set, in line 2, the setpoints of the calibration gases for the individual ranges or select a total or single calibration.

S Start a calibration procedure in lines 3 and 4.

This function is specific to the component.

5.8.1.1 Calibration: Calibrate IR Channels: Set Span Gas Values

(This is the calibration gas value(s) i.e."span gas value))
(Total calibration will calibrate both IR (methane) ranges (0-20% and 0-100%))

S **Total cal.:** In the first line of this dialog, you can select either a total or single calibration.
-- **ON** means that one range is calibrated and that this calibration is used for the other ranges (total calibration).
-- **OFF** means that each range is calibrated separately (single calibration, e.g. with different calibration gases).

S **With AUTOCAL**: You can define here whether you wish to carry out an AUTOCAL prior to the calibration procedure (**YES** or **NO**). An AUTOCAL is not necessary here if it has already been carried out shortly before the calibration procedure, e.g. a calibration procedure has taken place directly previously.

S **Span1, Span2**: Here you can enter the setpoints (target gas values for calibration gasses) for the individual measuring ranges (these are the concentrations of the components in the respective calibration gas). They should be set to a value which is between 70 and 100 % of the full-scale value. If **Total cal.: ON** has been selected, the analyzer automatically uses the setpoint of range 2 for range 1. With **Total cal.: OFF** any input is possible between the start-of-scale and full-scale values of the respective range.

```
Calibration CH4
Set span gas values
Start with range 1
Start with range 2

581a
Total cal.: OFF CH4
```

```
With AUTOCAL: NO
Span 1 : 50%
Span 2 : 50%
5811
```

5.8.1.2 Calibration: Calibrate IR Channels: Start with Range MR 1/2

The analyzer interrupts the current measurement if you call one of these two dialogs. If the parameter **With AUTOCAL** was set to **OFF,** the analyzer expects an immediate flow of calibration gas; if the value is set to **ON**, an AUTOCAL is carried out prior to the flow of gas. The values of the setpoint and actual-value calibrations are displayed in the first two lines.

If the analyzer recognizes a flow of calibration gas, the display changes as shown. If the measured value in the second line remains constant for more than approx. 10 s or does not change significantly, press the **ENTER** key.

The analyzer then compares the setpoint and actual value (measured value) of the calibration. If the deviation between the values is within the tolerance, the adjacent message is output. (**o.k.**)

If the actual value is approx. 20 % greater or smaller than the setpoint, the message **not o.k.** appears instead (no calibration possible).

5.8.2 Calibration: Calibrate O_2 Sensor

In this menu, you can call dialogs:

S To re-enter the installation date of the O_2 sensor

S To recalibrate the zero of the O_2 sensor.

5.8.2.1 Calibration: Calibrate O_2 Sensor: O_2 Cal. after Install

Following the installation of a new sensor, you must re-enter the installation date.

The entered date is checked for plausibility. A calibration (AUTOCAL) is then carried out with ambient air.

A check is carried out during this procedure to establish whether the sensor voltage is greater than 9 mV. If this is not the case, a fault message ”Sensor voltage too low”.

```
Set span: 50%
Reading: 49.9%
Connect span gas
5812
Set span: 50%
Reading: 49.9%
If the reading is
stable, press ENTER
5812a
Set span: 50%
Reading: 50.0%
Calibration o.k.
Press ESC to return
5812b
Set span: 50%
Reading: 40.9%
Tolerance not o.k.
```

(if tolerance not O.K. displayed see “autocal drift values above”)

```
Press ESC to return
5812c
O2 cal. after install
Start O2 zero cal.
582
O2 cal after install
Date :01.01.2000
5821
```

In order to zero the oxygen sensor you will need Nitrogen (or a blended gas containing CO2 and Methane in the approximate blended percentages expected in the sample gas being analyzed) The CO2 blend method will keep the analyzer from reading **** when the % oxygen nears zero.**

5.8.2.2 Calibration: Calibrate O_2 Sensor: O_2 Zero Cal.

In this dialog you can recalibrate the zero point of the O_2 sensor using nitrogen. Connect a flow of nitrogen and commence the calibration using **ENTER**.
When you call the calibration function, the current oxygen value is displayed in the second line. If this does not deviate by more than 1 % from the set value, it is used as the new zero (this is not the case in the example display, see third line).
If the value is greater than 1 %, a fixed standard value is used instead.

Notice

Please note that the exchange of gas takes place very slowly with low oxygen concentrations. Purge for 30 min, and then use the current value.

The following procedure "calibrate pressure sensor" should only be used where the sample gas (after analysis) is vented to atmosphere.

```
O2 zero ca. with N2
0.18 %
Nitrogen flow please
Calibrate with ENTER
5822
O2 zero cal with N2
1.25 %
>1% => default value
Press ESC to return
```

5.8.3 Calibration: Calibrate Pressure Sensor

In the first line of this dialog, you can re-enter the setpoint of the pressure sensor. Measure a value e.g. using an accurate barometer, and change the setpoint in the first line if necessary.

```
Set value: 1000 mbar
Reading: 1007 mbar
Enter new set value
583
```

Caution the following function "autocal" should be turned OFF when the analyzers oxygen sensor is used as a shutdown device.

5.8.4 Calibration: AUTOCAL

In this dialog you can change the following values of the AUTOCAL parameters:
S **Thermo-AUTOCAL**
-- **OFF:** An automatic AUTOCAL only takes place when the cycle time has expired (see below).
-- **ON:** An automatic AUTOCAL is carried out when the set cycle time has expired, and is also triggered in the case of changes in temperature > 8_C.
S **Cycle time AUTOCAL**
A further dialog is called, and you can set and modify the cycle time (the time between two AUTOCAL procedures triggered by the analyzer) in the second line. Valid cycle times are from 0 to 24

hours. In the display, 6 hours has been set as an example. A cyclic AUTOCAL is not carried out if 0 hours is set. The cycle time must not be set > 6 h if the analyzer is used in German systems subject to TA Luft and 13.BImSchV.
The fourth line indicates when the next AUTOCAL will take place.

S **Purge time**

If you call the menu item ”Purge time”, you can change the purge time (duration of flow with sample gas) in the second line of the displayed dialog. Valid purge times for analyzers with an O_2 sensor are 60 to 300 s, otherwise 0 to 300 s. There are minimum purge times depending on the measured components, and shorter times should not be used. 80 seconds has been selected in our example.

```
Thermo-AUTOCAL: OFF
Cycle time AUTOCAL
Purge time
584
```

(the following should not be used in landfill applications)

```
AUTOCAL
Cycle time: 6 hours
Time left 04:44 h
5841
Purge time
_ 80 seconds
5842
```

GCS-GAC-301

Operating instructions Edition 03/2005

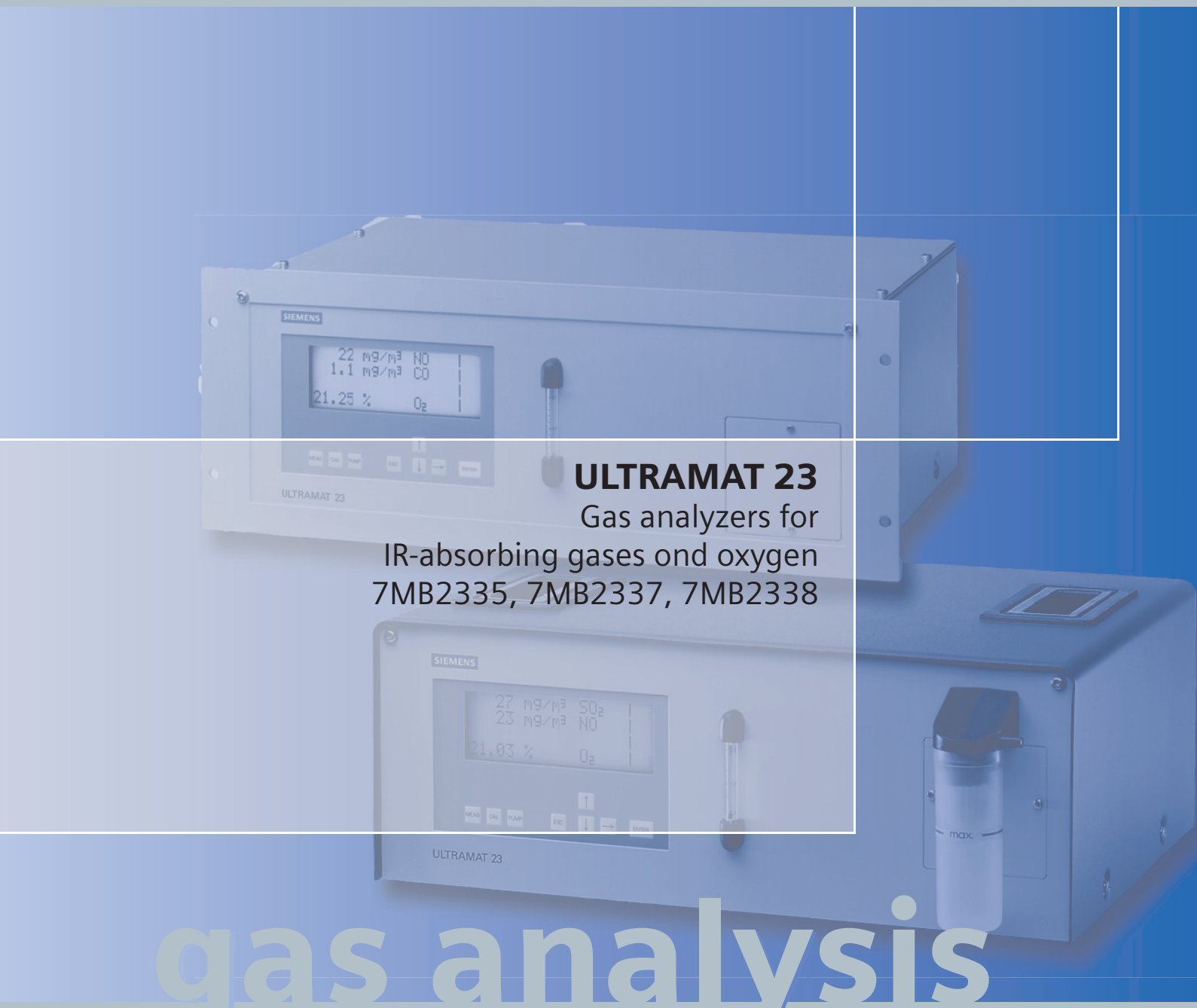

ULTRAMAT 23

Gas analyzers for IR-absorbing gases ond oxygen

7MB2335, 7MB2337, 7MB2338

gas analysis

SIEMENS

SIEMENS

ULTRAMAT 23

Gas Analyzer For IR-absorbing Gases And Oxygen
7MB2335, 7MB2337, 7MB2338
Operating Instructions

Order No.: C79000-B5276-C216
Version 03/2005

The reproduction or transmission of this document or its contents is not permitted without express written authority. Offenders will be liable for damages. All rights created by granting of patents or registration of a design are reserved. Technical data are subject to change without further notice.

Weitergabe sowie Vervielfältigung dieser Unterlage, Verwertung und Mitteilung ihres Inhaltes ist nicht gestattet, soweit nicht ausdrücklich zugestanden. Zuwiderhandlungen verpflichten zu Schadenersatz. Alle Rechte vorbehalten, insbesondere für den Fall der Patenterteilung oder GM-Eintragung. Technische Änderungen vorbehalten.

Toute communication ou reproduction de ce document, toute exploitation ou communication de son contenu sont interdites, sauf autorisation expresse. Tout manquement à cette règle est illicite et expose son auteur au versement de dommages et intérêts. Tours nos droits sont réservés pour le cas de la délivrance d'un brevet ou celui de l'enregistrement d'un modèle d'utilité. Modifications techniques sont réservées

La divulgación y reproducción de este documento así como el aprovechamiento de su contenido, no están autorizados, a no ser que se obtenga el consentimiento expreso, para ello. Los infractores quedan obligados a la indemnización por daños y perjucios. Se reservan todos los derechos, en particular para el caso de concesion de Patente o de Modelo de Utilidad. Salvo modificaciones ténicas

La trasmissione a terzi e la riproduzione di questa documentazione, cosiccome lo sfruttamento del suo contenuto non è permesso, se non autorizzato per iscritto. Le infrazioni comporteranno una richiesta di danni. Tutti i diritti sono riservati, in particolare nel caso di brevetti.Modifiche tecniche possibili.

ULTRAMAT, OXYMAT, SIPAN
are Siemens registered trademarks.
All other product or system names are (registered) trademarks of their respective owners and must be treated accordingly.
According to the German law on units in measuring technology, data in inches only apply to devices for export.

ULTRAMAT, OXYMAT, SIPAN
sind Marken von Siemens.
Die übrigen Bezeichnungen in diesem Handbuch können Marken sein, deren Benutzung durch Dritte für deren Zwecke die Rechte der Inhaber verletzen können.
Die Angaben in Zoll (inch) gelten gemäß dem Gesetz über Einheiten im Messwesen" nur für den Export.

ULTRAMAT, OXYMAT, SIPAN
sont des marques déposées de Siemens.
D'autres dénominations utilisées dans ce document peuvent également être des marques déposées dont l'utilisation par des tiers à leurs propres fins peut enfreindre les droits des propriétaires desdites marques.

ULTRAMAT, OXYMAT, SIPAN
son marcas registradas de Siemens.
Las otras designaciones que figuran en este documento pueden ser marcas cuya utilización por terceros para sus propios fines puede violar los derechos de los propietarios de dichas marcas.
Conforma a la "Ley sobre las unidades de medida", las dimensiones en pulgadas sólo son válidas para la exportación.

ULTRAMAT, OXYMAT, SIPAN
sono marchi registrati Siemens.
Le denominazioni di altri prodotti menzionati in questa documentazione possono essere marchi il cui uso da parte di terzi può violare i diritti di proprietà. Conformemente alla "Legge sulle unità di misura" i dati in pollici valgono soltanto per l'esportazione.

Contents

1 Information for the User 1-1

1.1 General Information 1-2
1.2 Notes on Using this Instructions 1-3
1.3 Danger Information 1-3
1.4 Approved Use 1-4
1.5 Qualified Personnel 1-4
1.6 Warranty Information 1-5
1.7 Supply and Delivery 1-5
1.8 Standards and Regulations 1-6
1.9 Conformity with European Guidelines 1-6

2 Installation Guidelines 2-1

2.1 Safety Information 2-2
2.2 Assembly instructions 2-2
2.3 Gas Connections and Internal Gas Paths 2-3
2.4 Gas Conditioning 2-4
2.5 Electric Connection 2-5
2.5.1 Power Supply Connection 2-5
2.5.2 Connection of Signal Cables 2-5

3 Technical Description 3-1

3.1 General 3-2
3.1.1 Overview 3-2
3.1.2 Benefit 3-2
3.1.3 Applications 3-2
3.2 Design 3-6
3.3 Function 3-9
3.4 Integration 3-10
3.5 Technical Data 3-13
3.6 Ordering Data 3-15
3.7 Dimensional drawings 3-21
3.8 Circuit diagrams (electric and gas connections) 3-23

4 Start-up 4-1

4.1 Safety Information 4-2
4.2 Preparations for Start-up 4-2
4.3 Start-up 4-3
4.3.1 AUTOCAL 4-3
4.3.2 Calibration 4-4
4.3.3 System Setup with Several Analyzers in Parallel 4-5

5 Operation 5-1
5.1 General 5-3
5.2 Display and Input Panel 5-4
5.3 Warm-up Mode 5-7
5.4 Measuring Mode 5-8
5.5 Input Mode 5-8
5.5.1 Code Levels 5-9
5.5.2 Key Operations Step-by-step 5-10
5.5.3 Using the ESC key 5-12
5.6 Recoding the Analyzer 5-13
5.7 Analyzer Status 5-15
5.7.1 Analyzer Status: Status 5-15
5.7.1.1 Analyzer Status: Status: Logbook/Faults 5-15
5.7.1.2 Analyzer Status: Status: Maintenance Request 5-16
5.7.1.3 Analyzer Status: Status: AUTOCAL Deviation 5-16
5.7.1.4 Analyzer Status: Status: O2 Sensor Status 5-16
5.7.2 Analyzer Status: Diagnostic Values 5-17
5.7.2.1 Analyzer Status: Diagnostic Values: IR Diagnostic Values 5-17
5.7.2.2 Analyzer Status: Diagnostic Values: O2 Diagnostic Values 5-18
5.7.2.3 Analyzer Status: Diagnostic Values: Pressure Sensor Diagnosis 5-18
5.7.2.4 Analyzer Status: Diagnostic Values: Other Diagnostic Values 5-18
5.7.3 Analyzer Status: Factory Settings Hardware 5-19
5.7.4 Analyzer Status: Factory Settings Software 5-19
5.8 Calibration 5-21
5.8.1 Calibration: Calibrate IR Channels 5-21
5.8.1.1 Calibration: Calibrate IR Channels: Set Span Gas Values 5-21
5.8.1.2 Calibration: Calibrate IR Channels: Start with Range MR 1/2 5-22
5.8.2 Calibration: Calibrate O2 Sensor 5-22
5.8.2.1 Calibration: Calibrate O2 Sensor: O2 Cal. after Install 5-22
5.8.2.2 Calibration: Calibrate O2 Sensor: O2 Zero Cal. 5-23
5.8.3 Calibration: Calibrate Pressure Sensor 5-23
5.8.4 Calibration: AUTOCAL 5-24
5.9 Parameters 5-26
5.9.1 Parameters: Measuring Ranges 5-26
5.9.1.1 Parameters: Measuring Ranges: Switch Ranges 5-26
5.9.1.2 Parameters: Measuring Ranges: Change Ranges 5-27
5.9.1.3 Parameters: Measuring Ranges: Hysteresis 5-27
5.9.2 Parameters: Limit values 5-28
5.9.3 Parameters: Time Constants 5-29
5.9.4 Parameters: Pump/LCD Contrast 5-29
5.9.4.1 Parameters: Pump/LCD Contrast: Adjust Pump 5-30
5.9.4.2 Parameters: Pump/LCD Contrast: Adjust LCD Contrast 5-30
5.10 Configuration 5-33
5.10.1 Configuration: Inputs/Outputs/Pump 5-33
5.10.1.1 Configuration: Inputs/Outputs/Pump: Analog Outputs 5-33
5.10.1.2 Configuration: Inputs/Outputs/Pump: Assign Relays 5-35
5.10.1.3 Configuration: Inputs/Outputs/Pump: Binary/Sync Inputs 5-38
5.10.1.4 Configuration: Inputs/Outputs/Pump: Pump at CAL/MEAS 5-39

5.10.2 Configuration: Special Functions 5-39
5.10.2.1 Configuration: Special Functions: Codes/Language 5-39
5.10.2.2 Configuration: Special Functions: AUTOCAL Drift 5-40
5.10.2.3 Configuration: Special Functions: ELAN/PROFIBUS 5-41
5.10.2.4 Configuration: Special Functions: Fact. data/Res/Units 5-43
5.10.3 Configuration: Tests 5-44
5.10.3.1 Configuration: Tests: Display/Keys/Flow 5-44
5.10.3.2 Configuration: Tests: Inputs/Outputs 5-44
5.10.3.3 Configuration: Tests: Chopper/IR Source 5-46
5.10.3.4 Configuration: Tests: RAM Monitor 5-46
5.10.4 Configuration: Factory Configuration 5-46
5.11 Other Inputs 5-47
5.11.1 PUMP Key 5-47
5.11.2 CAL Key 5-47

6 Maintenance 6-1
6.1 Messages 6-2
6.1.1 Maintenance Requests 6-2
6.1.2 Fault Messages 6-3
6.2 Maintenance Work 6-6
6.2.1 Replacement of O_2 Sensor 6-7
6.2.2 Replacement of Fuse 6-7
6.2.3 Replacement of Safety Filter 6-8
6.2.4 Emptying the Condensation Trap 6-8
6.2.5 Replacement of Coarse Filter 6-9
6.3 Maintenance of Gas Path 6-8
6.4 Cleaning the Analyzer 6-9

7 Spare Parts List 7-1

8 Appendix 8-1
8.1 Returned Deliveries 8-2
8.2 Explanations 8-5
8.2.1 Abbreviations 8-5
8.2.2 Explanation of Symbols 8-5
8.3 Software Release Versions 8-6
8.4 Certificates 8-11

Information for the User

1

1.1	General Information	1-2
1.2	Notes on Using this Instructions	1-3
1.3	Danger Information	1-3
1.4	Approved Use	1-4
1.5	Qualified Personnel	1-4
1.6	Warranty Information	1-5
1.7	Supply and Delivery	1-5
1.8	Standards and Regulations	1-6
1.9	Conformity with European Guidelines	1-6

Dear Customer,

Please read these instructions before you start work!
It contains important information and data whose observance will guarantee correct functioning of the analyzer and also save you servicing costs. The information will significantly help you when using the equipment and will lead to reliable results.

☞ **Notice**

We recommend that you discuss your application with our specialist department, especially before using the analyzer for new applications, for example in research and development.

1.1 General Information

The product described in this instructions has left the factory in a perfect and tested condition as regards safety. In order to retain this state and to achieve correct and safe operation of this product, it must only be used in the manner described by the manufacturer. In addition, correct and safe operation of this product is dependent on proper transport, storage and installation as well as careful operation and maintenance.

This instructions contains the information required for approved use of the product described in it. The instructions has been prepared for technically qualified personnel who have been specially trained or who possess appropriate knowledge in the field of instrumentation and control, referred to further as automation technology.

Knowledge of the safety information and warnings present in this instructions and their technically correct implementation are prerequisites for danger-free installation and commissioning and for safety during operation and maintenance of the described product. Only a qualified person possesses the required specialist knowledge to correctly interpret the general safety information and warnings present in this instructions and to apply them to the specific case.

This instructions is included in the delivery of the analyzer, even if separate ordering has been made possible for logistic reasons. For clarity reasons this instructions cannot cover all possible details for all versions of the described product and cannot describe every possible case in connection with installation, operation, maintenance or the use in systems. Should you require further information, or should particular problems occur which are not handled in sufficient depth in this instructions, help can be requested through your local Siemens office or representative.

1.2 Notes on Using this Instructions

This instructions describes the applications of the equipment and how you can start it up, operate and service it.

Of particular importance are the **warning and information texts.** These are separated from the remaining text, specially identified by appropriate pictograms (see Section 1.3).

1.3 Danger Information

Safety information and warnings serve to prevent danger to the life and health of users or maintenance personnel or to prevent damage to property and are emphasized in this instructions by the terms defined here. They are additionally identified by warning symbols (pictograms). The terms used in this instructions and the information on the product itself have the following meaning:

Danger
means that death, severe personal injury and/or substantial damage to property **will occur** if the appropriate safety precautions are not observed.

Warning
means that death, severe personal injury and/or substantial damage to property **can occur** if the appropriate safety precautions are not observed.

Caution
with warning triangle means that slight personal injury **can occur** if the appropriate safety precautions are not observed.

Caution
without warning triangle means that damage to property **can occur** if the appropriate safety precautions are not observed.

Attention
means that an undesirable event or state can occur if the appropriate safety precautions are not observed.

Notice

is important information on the product itself, the handling of the product or the respective part of the instructions to which particular attention should be paid.

1.4 Approved Use

Approved use in the sense of this instructions means that this product may only be used for the applications described in the Catalog and in the Technical Description (see also Chapter 3 of this instructions) and only in conjunction with other devices and components which have been recommended or approved of by Siemens.

The product described in this instructions has been developed, manufactured, tested and documented taking into account the appropriate safety standards. No danger therefore exists in the normal case with respect to damage to property or the health of persons if the handling guidelines and safety information described for configuring, assembly, approved use and maintenance are observed. This device has been designed such that safe isolation is guaranteed between the primary and secondary circuits. Low voltages which are connected must also be generated using safe isolation.

Correct and safe operation of this analyzer is additionally dependent on proper transport, storage, installation and assembly, as well as careful operation and maintenance.

Warning

This analyzer is an electrical unit. Following removal of the housing or guard, or after opening the system cabinet, certain parts of the device/system are accessible which may carry dangerous voltages. Therefore only suitably qualified personnel may work on this device. These must be thoroughly acquainted with all sources of danger and the maintenance measures as described in this instructions.

Notice

This analyzer has **not** been tested as a laboratory device according to the DIN EN 61010-2-081 standard (safety directives for electrical measuring, control and laboratory devices).

1.5 Qualified Personnel

Severe personal injury and/or extensive damage to property may occur following unqualified work on the device/system or the failure to observe the warnings described in the instructions or on the device/system cabinet. Therefore only suitably qualified personnel may work on this device/system.

Qualified persons in the sense of the safety information present in this instructions or on the product itself are persons who

- are either familiar as configuring engineers with the safety concepts of automation technology
- or have been trained as operators in the use of automation technology equipment and are acquainted with the contents of this instructions which refer to operation
- or have been appropriately trained as commissioning and/or maintenance personnel for such automation technology equipment or are authorized to energize, ground and tag circuits and devices/systems in accordance with established safety practices.

1.6 Warranty Information

Your attention is drawn to the fact that the contents of this instructions are not part of a previous or existing agreement, commitment or statutory right and do not change these. All commitments on the part of Siemens are contained in the respective sales contract which also contains the complete and solely applicable warranty conditions. These warranty conditions in the contract are neither extended nor limited by the contents of this instructions.

1.7 Supply and Delivery

The respective scope of delivery according to the valid contract is listed on the shipping documents accompanying the delivery.

When opening the packaging, please observe the corresponding information on the packaging material. Check that the delivery is complete and undamaged. In particular, compare the Order Nos. on the rating plates (if present) with the ordering data.

Please retain the packaging material if possible so that you can reuse it if it is necessary to return the device. A form for this purpose can be found in Chapter 8.1.

1.8 Standards and Regulations

The harmonized European standards have been applied as far as possible to the specification and production of this device. If no harmonized European standards have been applied, the standards and regulations for the Federal Republic of Germany apply (see also the technical data in Chapter 3).

When using this product outside the range of applicability of these standards and regulations, the appropriate standards and regulations in the country of use must be observed.

1.9 Conformity with European Guidelines

CE symbol

EMC guideline

The ULTRAMAT 23 gas analyzer complies with the requirements of the EU guideline 89/336/EEC "Electromagnetic compatibility". Observation of this EU guideline has been checked according to DIN EN 61326:2002.

Low voltage guideline

The ULTRAMAT 23 gas analyzer complies with the requirements of the EU guideline 72/23/EEC "Low-voltage guideline". Observation of this EU guideline is checked according to DIN EN 61010-1.

Declaration of conformity

In line with the above-mentioned EU guidelines, the EU declarations of conformity are available at the following address for inspection by appropriate authorities:

Siemens Aktiengesellschaft
Automation and Drives Group
A&D PI 2
Östliche Rheinbrückenstraße 50

D-76187 Karlsruhe
Germany

Installation Guidelines 2

2.1	Safety Information	2-2
2.2	Setting-up	2-2
2.3	Gas Connections and Internal Gas Paths	2-3
2.4	Gas Conditioning	2-3
2.5	Electric Connection	2-4
2.5.1	Power Supply Connection	2-5
2.5.2	Connection of Signal Cables	2-5

2.1 Safety Information

Warning

Certain parts in this analyzer carry dangerous voltages. The housing must be closed and earthed before switching on the analyzer.

Warning

The analyzer must not be used in hazardous areas. Explosive gas mixtures (e.g. flammable gases together with air or oxygen in a potentially explosive ratio) must not be measured.

Warning

if the sample gas could contain flammable components above the lower explosion limit (LEL), the analyzer version 'Gas path as pipe' is required (see chapter 8.4).

Warning

The gas path must be checked for leaks at regular intervals depending on the corrosivity, toxicity and flammability of the sample gas. When measuring toxic or corrosive gases, it may occur that sample gas collects within the analyzer as a result of leaks in the gas path. To prevent the danger of poisoning or the damaging of analyzer components, the analyzer or system must be purged with inert gas (e.g. nitrogen). The gas displaced by purging must be collected using an appropriate assembly and routed for environment-friendly disposal via an exhaust line.

2.2 Assembly instructions

- A location should be selected which is as free as possible from vibration. The permissible ambient temperature must be observed during operation.
- The ULTRAMAT 23 must be placed on supporting rails if it is to be fitted in a cabinet or benchtop housing. Assembly only at the front is insufficient because the weight of the analyzer would place too great a load on the chassis.
- The heat sink on the rear panel must be unrestricted to permit appropriate air circulation.

2.3 Gas Connections and Internal Gas Paths

Sample gas line

A pipe with an outer diameter of 6 mm or 1/4" is present as the gas connection.

Materials to be used: must be suitable for the respective measurement.

If the sample gas is to flow into a collective exhaust line, observe the following points:

- The exhaust line must be free of rapid changes in pressure. If this is not possible, either use a separate exhaust line or
- fit a damping vessel (> 1 l) between the analyzer and the exhaust line.
- The exhaust line should always be routed with a falling gradient since water make condense in it.

Paths for AUTO-CAL/zero gas

The corresponding gases must be sucked in via a fine filter. The amount of the measured gas component must be negligibly small in the AUTOCAL gas (zero gas). In particular when carrying out an AUTOCAL for CO_2 ranges < 3 %, the air must be routed via a CO_2 absorber (e.g. soda lime).

Path for chopper section purging

With certain CO_2 ranges (see Section 3), the chopper section is purged with clean nitrogen or CO_2-free synthetic air at an inlet pressure of 300 to 350 kPa.

Path for pressure sensor

The internal atmospheric pressure sensor is routed to connection 6 in the 19" rack version via a hose. It is therefore possible to connect the pressure sensor (e.g. when using analyzer cabinets or houses) such that it is guaranteed that only changes in atmospheric pressure are recorded.

Gas connections and gas paths

Refer to the Technical Description (Chapter 3) in this Manual.

2.4 Gas Conditioning

The sample gas must be sufficiently conditioned to prevent contamination of the parts through which it flows. The ULTRAMAT 23 is usually preceded by

- a gas sampling device with filter,
- a sample gas cooler,
- an analysis filter (1-2 μm) and
- an external gas suction pump (with sample gas lines > 20 m)

(see Fig. 2.1).

☞ **Notice**

With the analyzer version with pipe 1.4571, there is **no** safety filter and **no** condensation trap in the internal gas path. Therefore correct gas preparation must always be ensured!

Depending on the composition of the sample gas, additional equipment may be necessary such as e.g. a washbottle, additional filters and a pressure reducer.

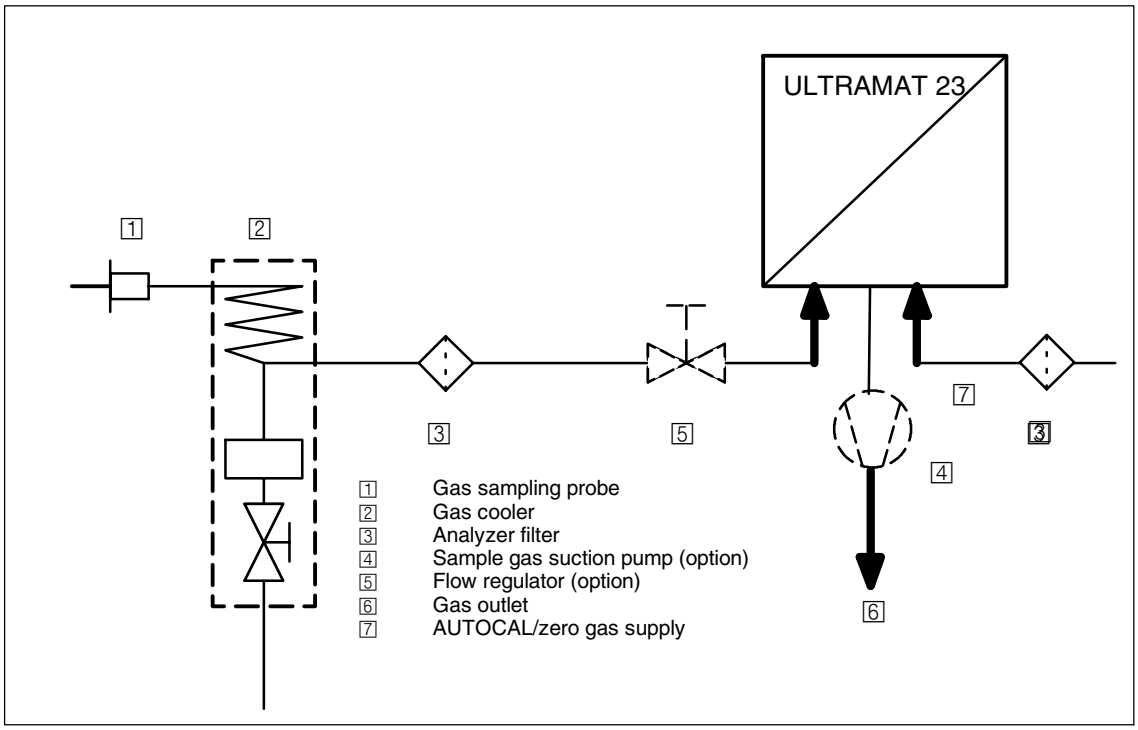

Fig. 2-1 Gas conditioning

2.5 Electric Connection

Warning

The following must be observed during the electric installation:

The country-specific standards for installation of power systems with rated voltages below 1000 V (in Germany: VDE 0100).

The failure to observe the standards may result in death, personal injury and/or damage to property.

2.5.1 Power Supply Connection

The analyzer is supplied with an appliance plug which may only be connected to the power supply by qualified personnel (see Section 1.5). The cross-section of the cable must be ≥ 1 mm^2, where the protective earth conductor must have at least the same cross-section as L and N.

The mains cable must be routed separately from the signal cables if it is not double-insulated.

A mains disconnector which is readily accessible and identified as belonging to the analyzer must be provided in the immediate vicinity of the analyzer.

The benchtop version is already fitted with a mains disconnector on the rear panel which must always remain readily accessible.

Check that the local mains voltage agrees with that specified on the rating plate on the analyzer.

2.5.2 Connection of Signal Cables

RC elements must be connected according to Fig. 2-2 as a measure to suppress the generation of sparks across the relay contacts (e.g. limit relays). Note that the RC element results in a drop-out delay for an inductive component (e.g. solenoid valve). The RC element should therefore be dimensioned according to the following rule-of-thumb:

$R = R_L/2$; $C = 4L/R^2_L$.

The following are usually sufficient: R = 100 Ω and C = 200 nF.

Additionally make sure that you only use a non-polarized capacitor C.

When using direct current, it is possible to fit a spark suppression diode instead of the RC element.

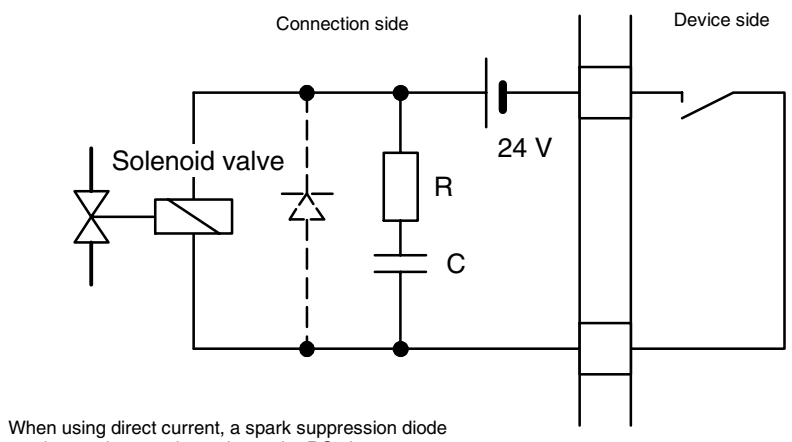

When using direct current, a spark suppression diode can be used as an alternative to the RC element.

Fig. 2-2 Measure to suppress sparks on a relay contact

The reference ground of the analog inputs is the housing potential.

The analog outputs are floating, but have a common negative pole.

The input/output cables must be connected to the corresponding trapezoidal plug (SUB-D plug) according to the pin assignment diagrams (see Chapter 3, Technical Description, pages 3-23 and 3-24). The conductor cross-section should be ≥ 0.5 mm^2. The interface cable must not be longer than 500 m.

☞ **Notice**

The cables (apart from the mains cable) must be screened, and their screen must be screen connected at both ends to ground.

☞ **Notice**

The 24-V power supply must be a protective extra-low voltage with safe electrical isolation.

Technical Description 3

3.1	General	3-2
3.1.1	Overview	3-2
3.1.2	Benefit	3-2
3.1.3	Applications	3-2
3.2	Design	3-6
3.3	Function	3-9
3.4	Integration	3-10
3.5	Technical Data	3-13
3.6	Ordering Data	3-15
3.7	Dimensional drawings	3-21
3.8	Circuit diagrams (electric and gas connections)	3-23

3.1 General

3.1.1 Overview

The ULTRAMAT 23 gas analyzer can measure up to 4 gas components at once: A maximum of three infrared sensitive gases such as CO, CO_2, NO, SO_2, CH_4 or R22 (freon, $CHClF_2$) plus O_2 with an electrochemical oxygen measuring cell.

ULTRAMAT 23 basic versions for:

- 1 infrared gas component with/without oxygen measurement
- 2 infrared gas components with/without oxygen measurement
- 3 infrared gas components with/without oxygen measurement.

ULTRAMAT 23

3.1.2 Benefits

- AUTOCAL with ambient air
  (depends on measured component)
  High efficiency so no calibration gas and accessories required
- High selectivity by multiple layer detectors, small cross sensitivity e.g. to water vapor
- Easy to clean sample cells,
  reduced maintenance cost
- Menu-assisted operation in plain text
  operation control without manual, high operational safety
- Service information and log book,
  preventive maintenance; help for service and maintenance personnel, cost reduction
- Coded operator level against unauthorized access,
  increased safety
- Open interface architecture (RS 485, RS 232; PROFIBUS, SIPROM GA);
  simplified process integration, remote control.

3.1.3 Applications

Application areas

- Optimization of small firing systems
- Monitoring of exhaust gas concentration from firing systems with all types of fuel (oil, gas and coal) as well as operational measurements with thermal incineration plants
- Room air monitoring
- Monitoring of air in fruit stores, greenhouses, fermenting cellars and warehouses
- Monitoring of process control functions
- Atmosphere monitoring during heat treatment of steel
- For use in non-potentially explosive atmospheres.

Further applications

- Environmental protection
- Chemical plants
- Cement industry.

Special applications

The ULTRAMAT 23 with 2 IR components without pump is also available with two separate gas paths. This allows the measurement of two measuring points as used e.g. for the NO_x measurement before and after the NO_x converter.

The ULTRAMAT 23 gas analyzer can be used in emission measuring systems and for process and safety monitoring.

TÜV-approved versions of the ULTRAMAT 23 are available for measurement of CO, NO, SO_2 and O_2 according to 13. BImSchV and TA Luft.

Smallest TÜV-approved and permitted measuring ranges:

- 1- and 2-component analyzer
  - CO: 0 to 150 mg/m^3
  - NO: 0 to 250 mg/m^3
  - SO_2: 0 to 400 mgm^3
- 3-component analyzer
  - CO: 0 to 250 mg/m^3
  - NO: 0 to 400 mg/m^3
  - SO_2: 0 to 400 mg/m^3

All larger measuring ranges are also permitted.

3.2 Design

- 19“ unit with 4 HU for installation
  - in swing frame
  - in cabinets, with or without slide rails
- Flowmeter for sample gas on front panel;
  Option: integrated sample gas pump (standard for bench-top version)
- Gas connections for sample gas input and output as well as combustion gas and combustion air, pipe diameter 6 mm or ¼“
- Gas and electrical connections at the rear (portable version: sample gas inlet at front).

Display and control panel

- Operation according to NAMUR recommendation
- Simple, fast programming and commissioning of analyzer
- Large, backlit LCD for measured values
- Menu-based inputs for programming, test functions and calibration
- Washable membrane keypad
- User help in plain text
- Multi-language operation software.

Inputs and outputs

- Three binary inputs for sample gas pump On/Off, triggering of AUTOCAL and synchronization of several devices
- Eight relay outputs can be freely configured for fault, maintenance request, maintenance switch, limits, range identification and external solenoid valves
- Eight additional relay outputs as an option
- Eight additional binary inputs as an option
- Electrically isolated analog outputs.

Communication

- RS 485 present in basic unit (connection from the rear).

Options

- Converter to RS 232
- Converter to TCP/IP Ethernet
- Incorporation in networks via PROFIBUS DP/PA interface
- SIPROM GA software as service and maintenance tool.

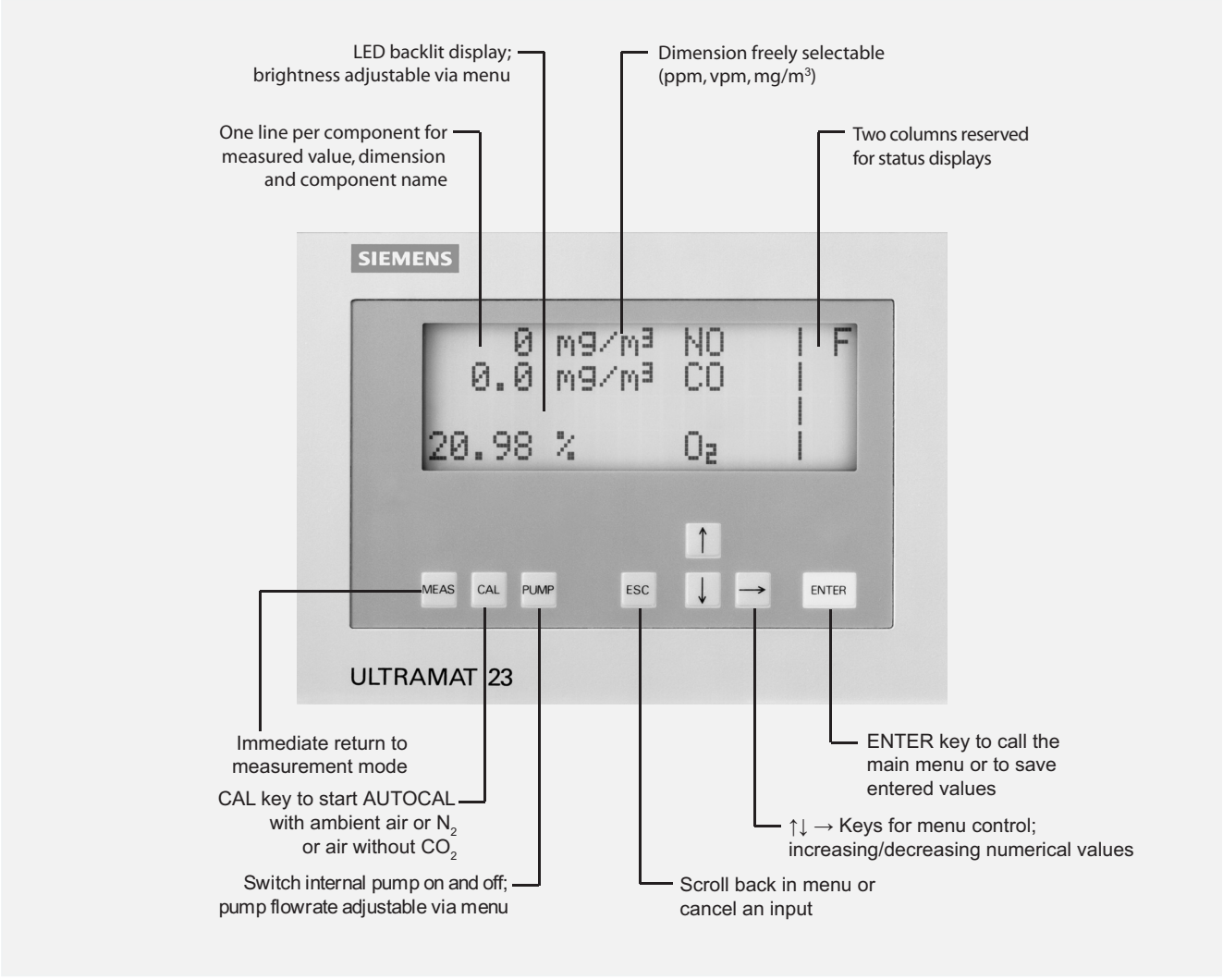

Executions of the wetted parts

Gas path		19“ unit	Desktop unit
With hoses	Condensation trap/gas inlet	-	PA (polyamide)
	Condensation trap	-	PE (polyethylene)
	Gas nipples 6 mm	PA (polyamide)	PA (polyamide)
	Gas nipples ¼“	SS, type No. 1.4571	SS, type No. 1.4571
	Hose	FPM (Viton)	FPM (Viton)
	Pressure switch	FPM (Viton) + PA6-3-T (Trogamide)	FPM (Viton) + PA6-3-T (Trogamide)
	Flowmeter	PDM/Duran glass/X10CrNiTi1810	PDM/Duran glass/X10CrNiTi1810
	Elbows/T-pieces	PA6	PA6
	Internal pump	PVDF/PTFE/EPDM/FPM/Trolene/ SS, type No. 1.4571	PVDF/PTFE/EPDM/FPM/Trolene/ SS, type No. 1.4571
	Solenoid valve	FPM70/Ultramide/1.4310/1.4305	FPM70/Ultramide/1.4310/1.4305
	Safety reservoir	PA66/NBR/PA6	PA66/NBR/PA6
	Sample cell		
	• Body	Aluminium	Aluminium
	• Cell lining	Aluminium	Aluminium
	• Stub	SS, type No. 1.4571	SS, type No. 1.4571
	• Window	CaF2	CaF2
	• Adhesive	E353	E353
	• O-ring	FPM (Viton)	FPM (Viton)
With pipes	Gas nipples (6 mm / ¼ “)	SS, type No. 1.4571	
	Pipes	SS, type No. 1.4571	
	Sample cell		
	• Body	Aluminium	
	• Cell lining	Aluminium	
	• Stub	SS, type No. 1.4571	
	• Window	CaF2	
	• Adhesive	E353	
	• O-ring	FPM (Viton)	

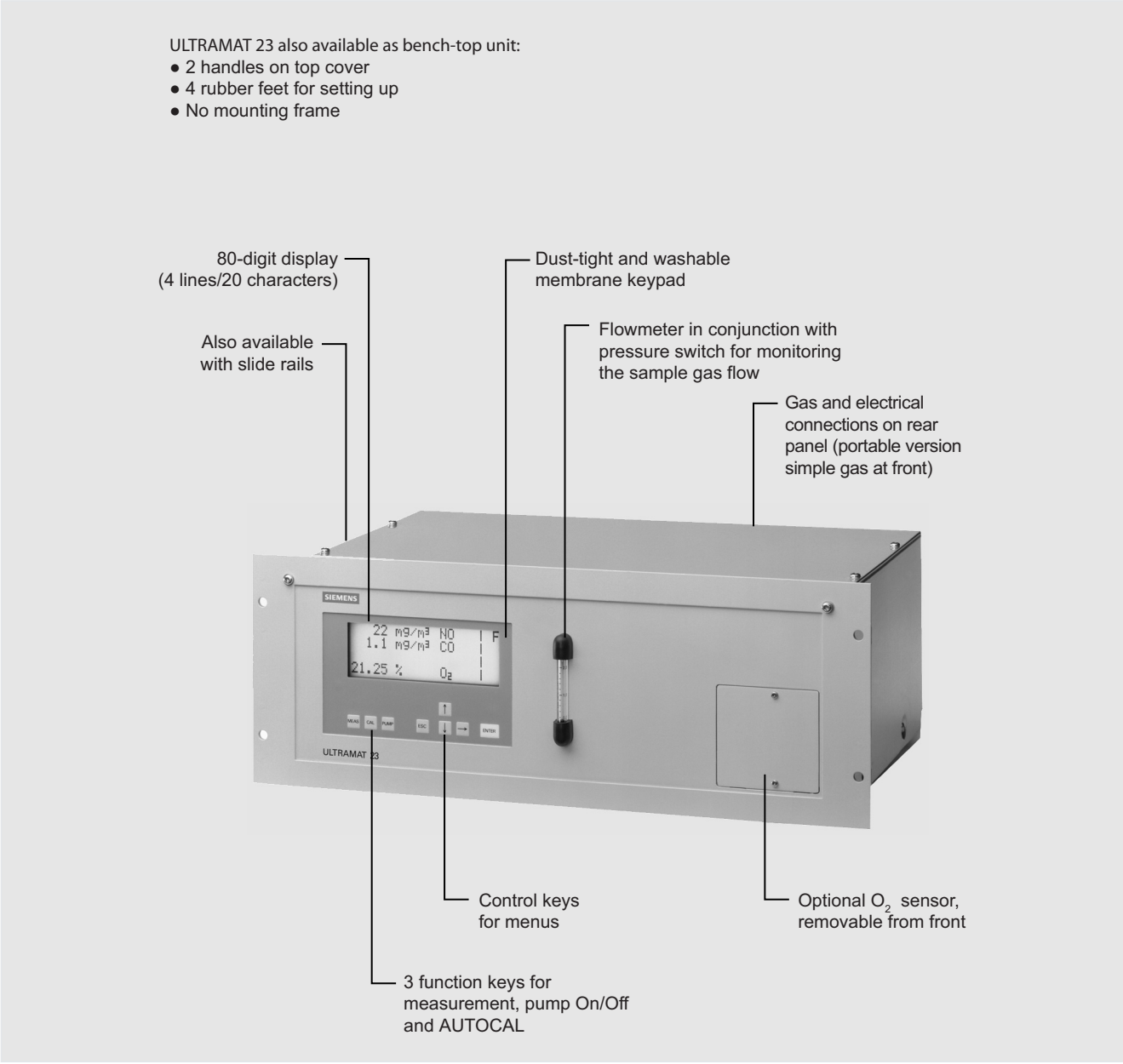

ULTRAMAT 23, design

Gas path

Key to gas path figures

1	Inlet fo sample gas/ calibration gas	9	Safety fine filter
2	Gas outlet	10	Solenoid valve
3	Inlet for AUTOCAL/zero gas or Inlet for sample gas/ adjusting gas (channel 2)	11 12	Sample gas pump Pressure switch
4	Gas outlet (channel 2)	13	Flowmeter
5	Enclosure flushing	14	Infrared measuring cell
6	Atmospheric pressure sensor	15	Safety condensate trap
7	Inlet/chopper compartment flushing	16	Oxygen measuring cell
8	Condensation trap with filter		

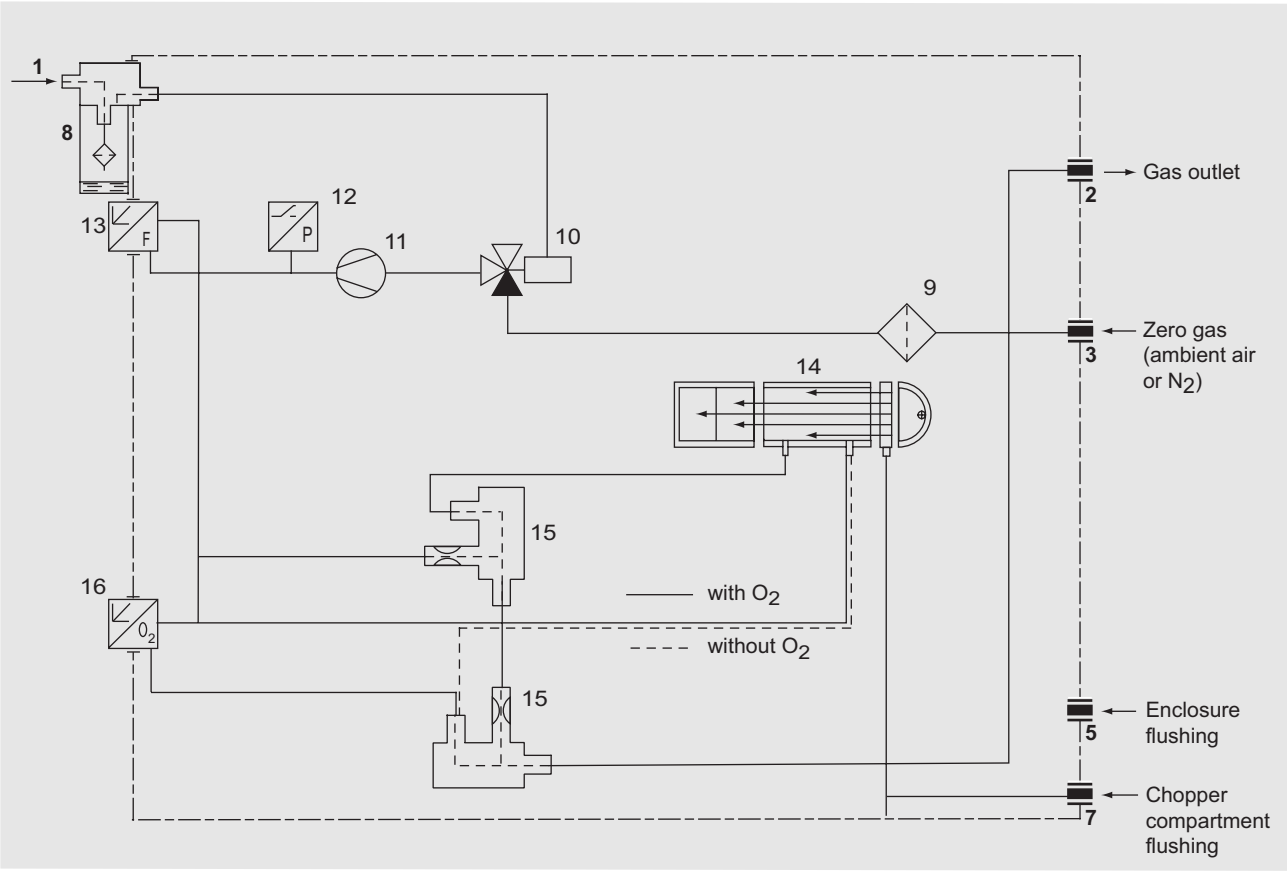

ULTRAMAT 23, portable, in sheet-steel housing with internal sample gas pump, condensation trap with safety filter on front panel, optional oxygen measurement

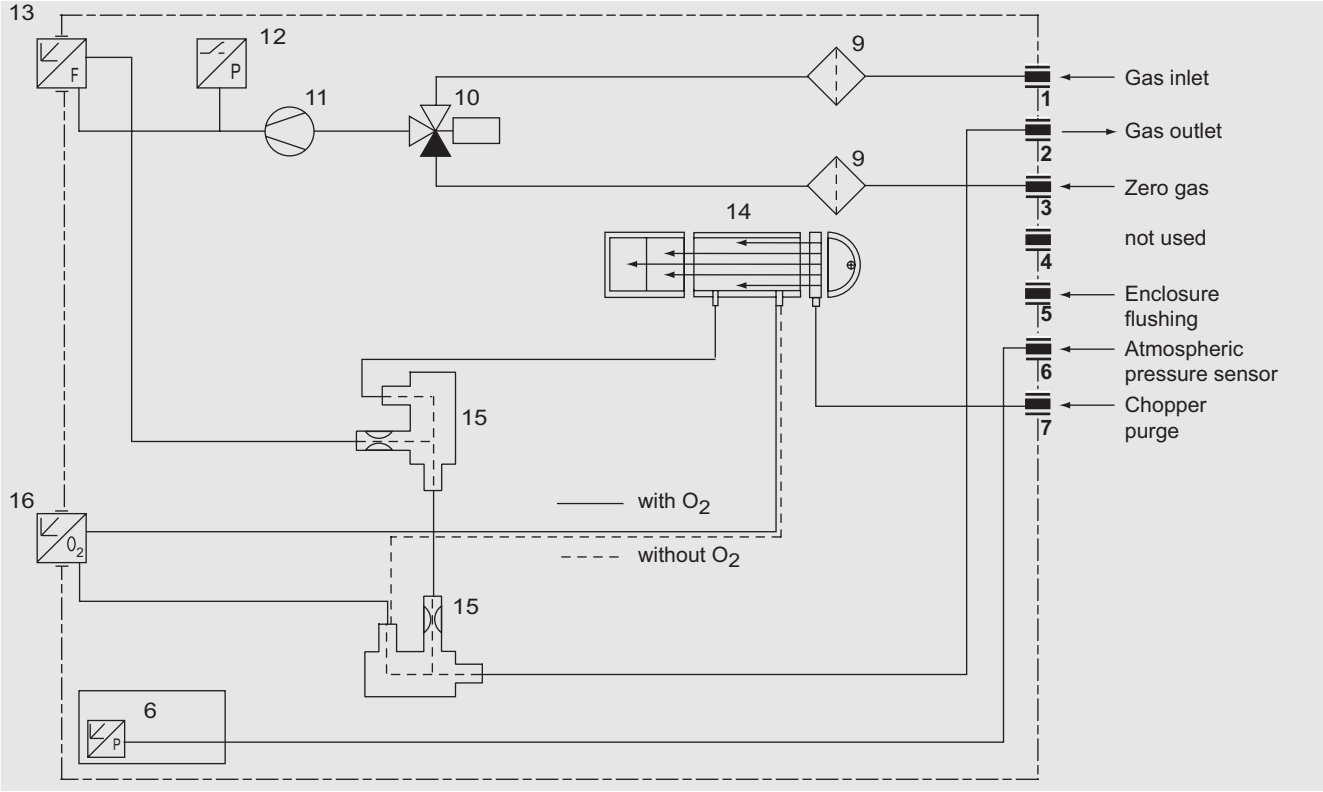

ULTRAMAT 23, 19“ unit with internal sample gas pump, optional oxygen measurement

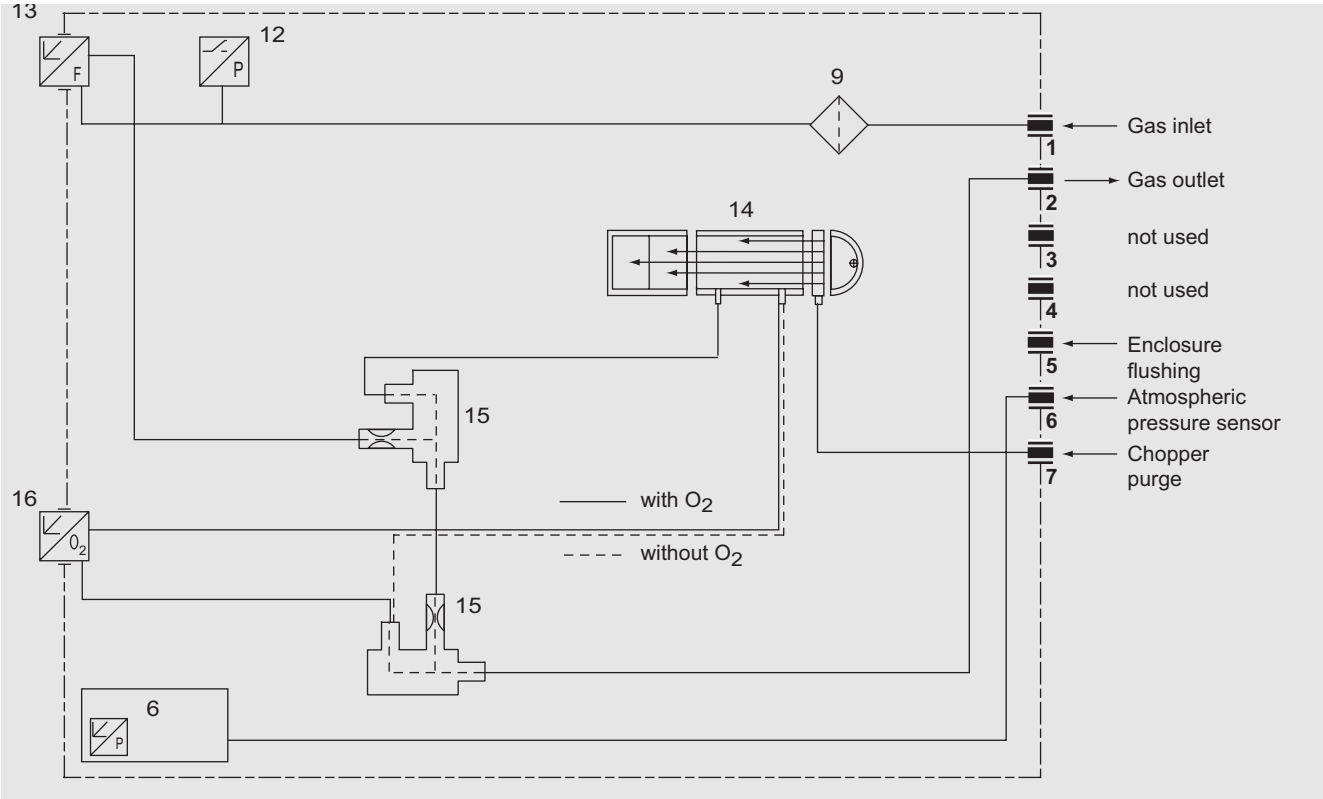

ULTRAMAT 23, 19“ unit without internal sample gas pump, optional oxygen measurement

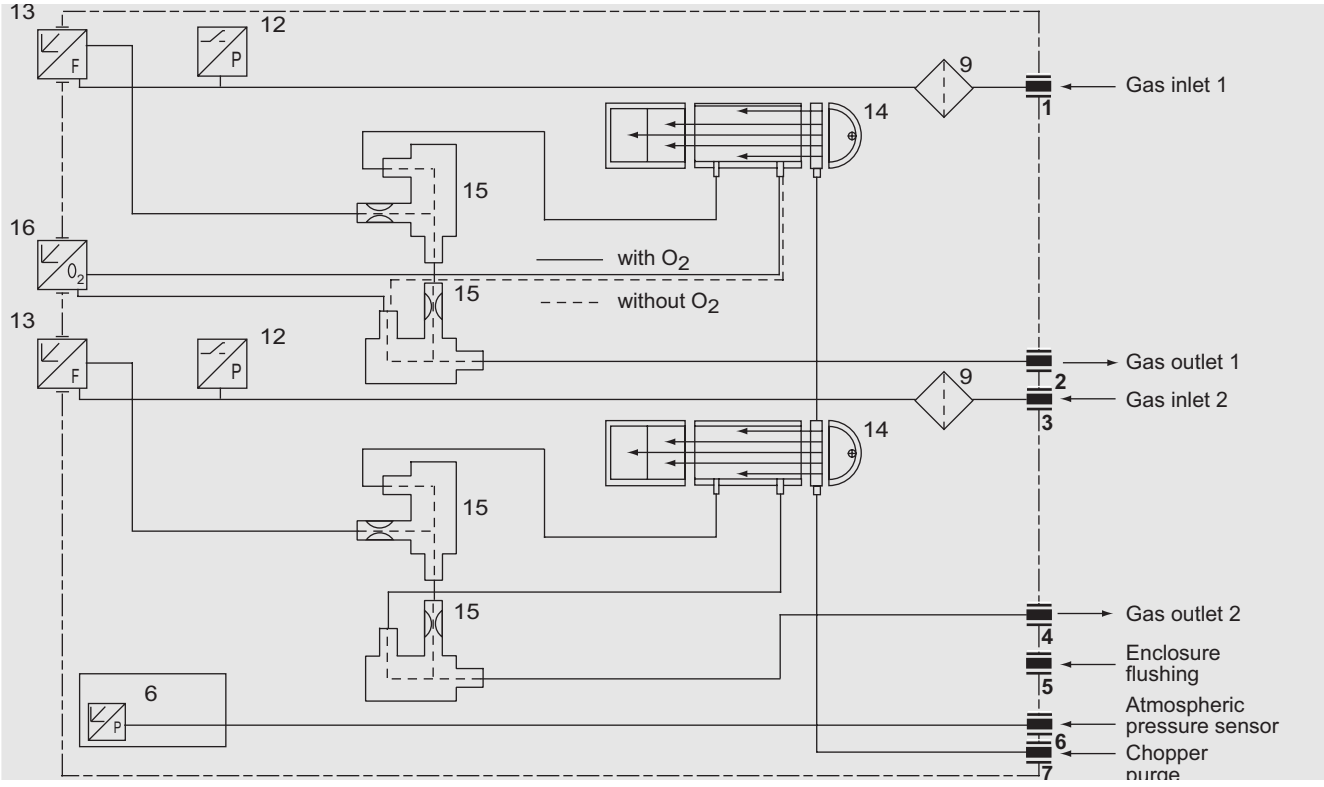

ULTRAMAT 23, 19“ unit without internal sample gas pump, with separate gas path for the second component or for the 2nd and 3rd components, optional oxygen measurement

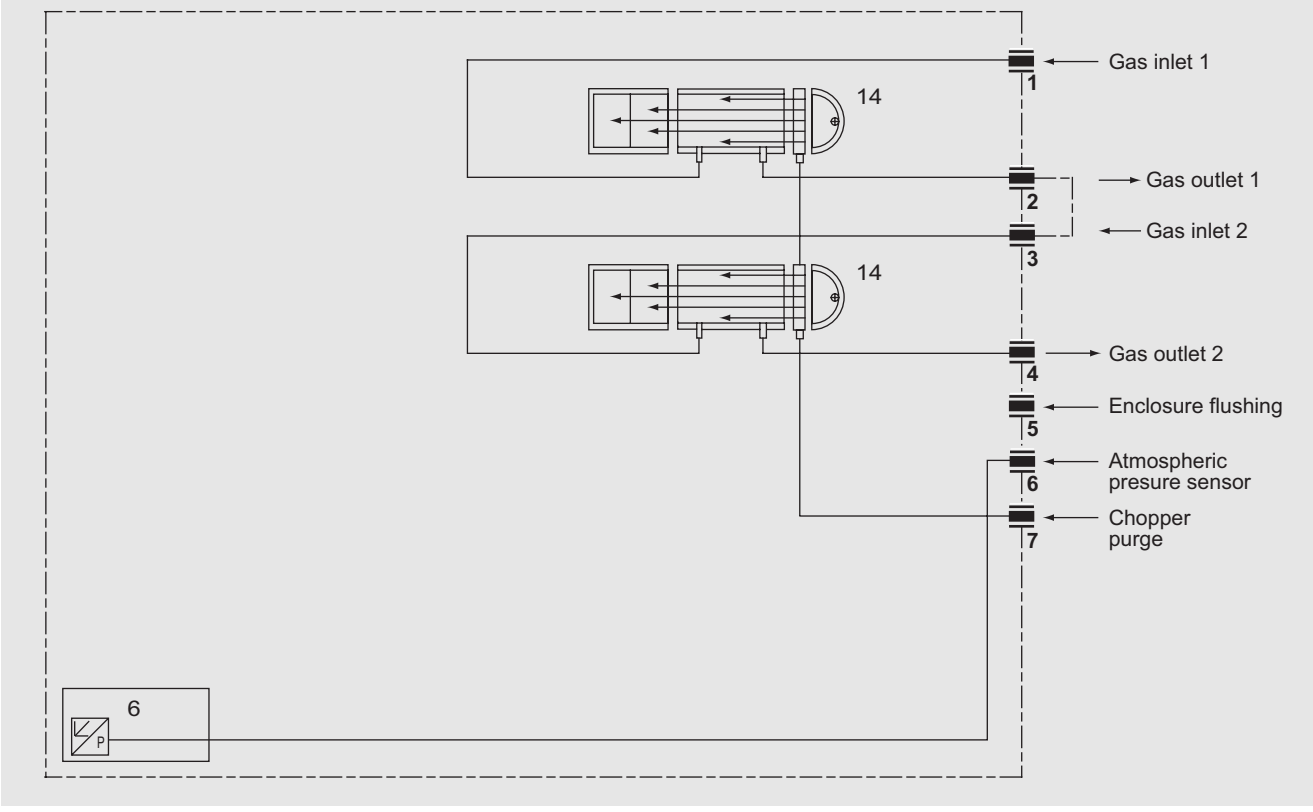

ULTRAMAT 23, 19“ unit, sample gas path version in pipes, optional separate gas path, always without safety filter and without safety trap

3.3 Function

Two independent, selective measuring principles are used in the ULTRAMAT 23.

Infrared measurement

An IR source (7) at 600 °C emits an infrared radiation which is modulated with 8 1/3 Hz by a chopper (5). After passing the sample cell (4), the intensity of the radiation is measured by the detector (11, 12).

The represented detector is composed of layers filled with the component to be analyzed. The energy of the middles of the IR bands of the measured gases is mainly absorbed in the first layer. The second layer absorbs the edge energy which is tuned on high selectivity in the third layer via an aperture.

When passing through the layers the radiation absorption results in different pressure increases and so to a flow via the capillary hole. The microflow sensor there generates a signal which is nearly independent of interferences from components at the band edges.

Note

The sample gases have to enter the analyzer dustfree. Avoid condensate in the sample cells. Therefore an appropriated gas preparation is required depending of the application.

The ambient air of the analyzer should be, in a large extent, free of high concentrations of the component to be measured.

Mode of operation of infrared channel (example with three-layer detector)

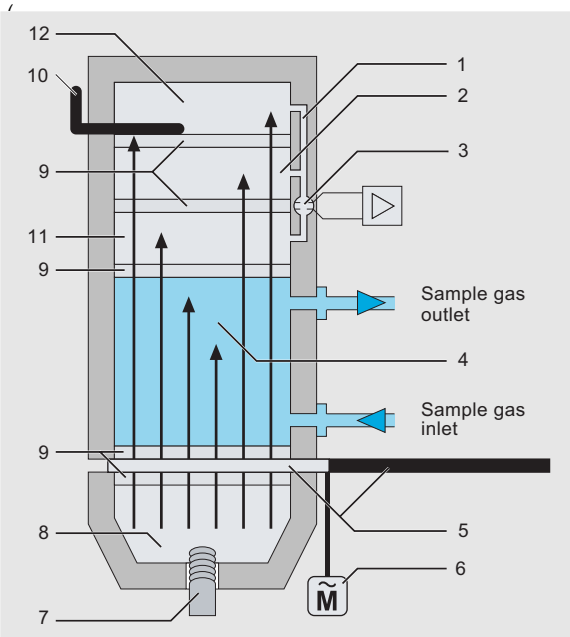

1 Capillary
2 Second detector layer
3 Microflow sensor
4 Sample cell
5 Chopper wheel
6 Chopper motor
7 IR source
8 Reflector
9 Window
10 Aperture
11 First detector layer
12 Third detector layer

Oxygen measurement

The oxygen sensor operates according to the principle of a fuel cell. The oxygen is converted at the boundary layer between cathode and electrolyte; the resulting current is proportional to the concentration of oxygen.

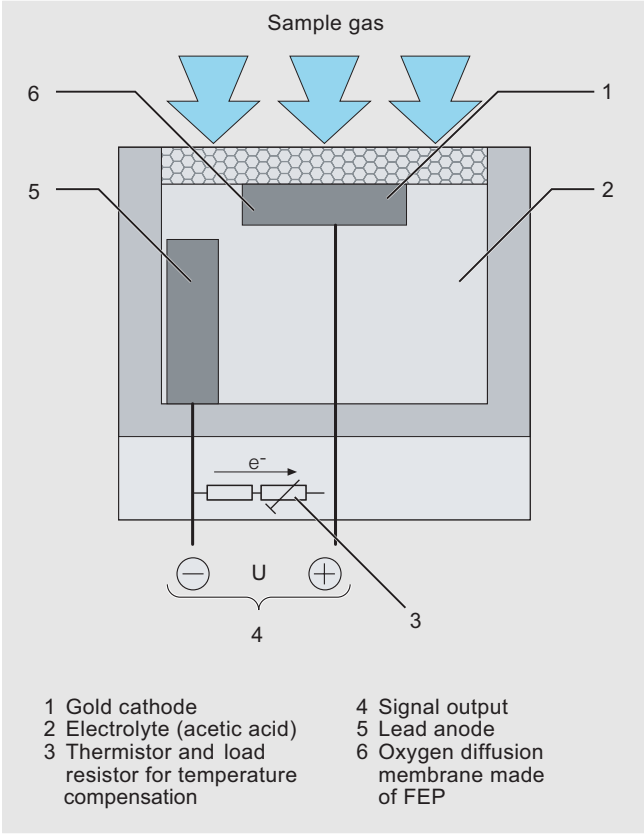

ULTRAMAT 23, mode of operation of oxygen measuring cell

Essential characteristics

- Practically maintenance-free as a result of AUTOCAL with ambient air (or with N_2, devices without oxygen sensor); both the zero and the span are calibrated in the process
- Calibration with calibration gas is only necessary every 12 months, depending on application
- Two measuring ranges can be set per component within defined limits;
  all measuring ranges linearized;
  autoranging with range identification
- Automatic correction of variations in atmospheric pressure
- Gas flow monitoring;
  Low-flow alarm at <1 l/min (with viton sample gas path only)
- Maintenance request alert
- Two limits can be freely configured for each component, for upward or downward violation.

3.4 Integration

Communication

Communications facilities

The gas analyzers of series 6 (ULTRAMAT 6, ULTRAMAT/OXYMAT 6, OXYMAT 6, OXYMAT 61, FIDAMAT 6 and CALOMAT 6), as well as the ULTRAMAT 23 offer the following communications facilities:

- RS 485 interface
- PROFIBUS DP/PA
- AK interface (only OXYMAT 6, ULTRAMAT 6 and ULTRAMAT/OXYMAT 6).

RS 485 interface (ELAN)

The standard integrated series interface permits to communicate between several gas analyzers via the internal bus (ELAN).

Up to 12 gas analyzers with max. four components can be networked.

The operating principle is shown in the following figure.

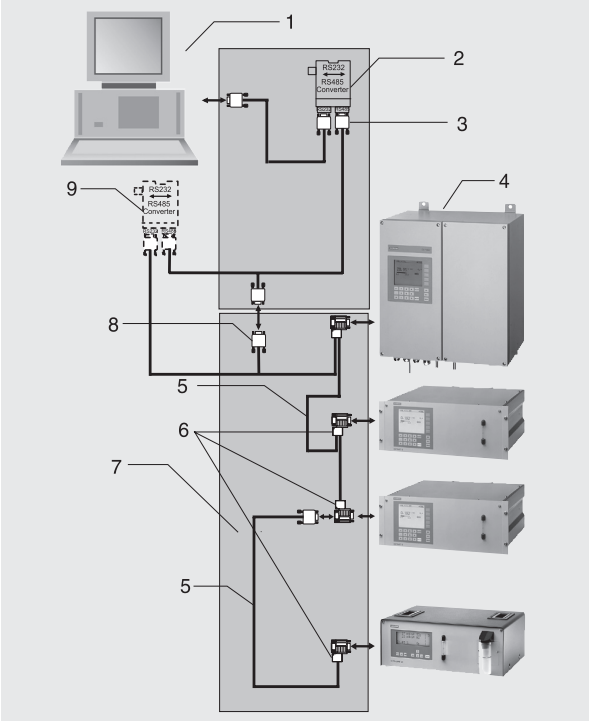

Typical design of an RS 485 network

Item	Designation
1	Computer
2	RS 485/RS 232 converter with RS 485/RS 232 cable
3	RS 485 bus connector with jumper
4	Analyzers
5	RS 485 cable
6	RS 485 bus connector
7	RS 485 network
8	9-pin SUB-D plug
9	Option: RS 485 repeater

.Interface parameters

Level	RS 485
Baud rate	9600
Data bits	8
Stop bit	1
Start bit	1
Parity	None
No echo mode	

Ordering information	Order No.
Interface description	**A5E00054148**
RS 485/RS 232 converter	**C79451-Z1589-U1**
RS 485/Ethernet converter	**C79451-A3364-D61**
Further accessories (e.g. cable, connectors, repeater, etc.)	**see Catalog IK PI**

RS 485 interface (SIPROM GA)

SIPROM GA is a software tool for service and maintenance. All analyzer functions (except factory functions) can be remote-controlled and monitored via RS 485/RS 232 converters.

Up to 12 gas analyzers with max. four components can be networked.

Networking of several gateways is possible when using the RS 485/Ethernet converter (gateway). The number of operatable analyzers is increased correspondingly.

Functions

- Display and saving of all analyzer data
- Remote operation of all analyzer functions
- Parameter and configuration settings
- Comprehensive diagnostics information
- Remote calibration
- Online help
- Cyclic saving of measured values and status on hard disk
- Exporting to commercially available application programs
- Downloading of new software.
- *Hardware requirements:*
- PC/Laptop Pentium 133 MHz, RAM 32 MB, CD-ROM drive
- Free disk capacity min. 10 MB
- Free COM-Port: RS 232 or RS 485:
  - for coupling to ELAN network RS 485/RS 232
  - Linking the RS 485/Ethernet converter requires a 10 MB standard network (RJ 45 connection) with TCP/IP. The distance should not exceed 500 m with an RS 485 network, a repeater should be inserted for a longer distance.

Software requirements:

- Windows 95
- Windows 98
- Windows NT 4.0
- Windows 2000
- Windows XP.

Ordering information	Order No.
SIPROM GA software German/English selectable during installation, comprising 1 CD, with installation instructions, software product certificate and registration form	**S79610-B4014-A1**
Firmware retrofitting sets for older analyzers:	
ULTRAMAT 23 (prior to SW version 4.1) all langages	**C79451-A3494-S501**
ULTRAMAT 6 (prior to SW version 4.1)	
• German	**C79451-A3478-S501**
• English	**C79451-A3478-S502**
• French	**C79451-A3478-S503**
• Spanish	**C79451-A3478-S504**
• Italian	**C79451-A3478-S505**
OXYMAT 6 (prior to SW version 4.1)	
• German	**C79451-A3480-S501**
• English	**C79451-A3480-S502**
• French	**C79451-A3480-S503**
• Spanish	**C79451-A3480-S504**
• Italian	**C79451-A3480-S505**

PROFIBUS DP/PA is the leading field bus on the market. All Siemens gas analyzers are suitable for PROFIBUS when equipped with an optional plug-in card (retrofitting also possible) and satisfy the binding "Device profile for analyzers" defined by the **PNO** (PROFIBUS user organization). Central access to the analyzers in the system is possible using the SIMATIC PDM operator input software.

The term field bus describes a digital communications system with which distributed field devices in a plant are networked together via one single cable, and connected at the same time to programmable controllers or to a process control system. PROFIBUS is the leading field bus on the market. The **PROFIBUS DP** version is widely used for production automation because of its high transmission ratefor relatively small data quantities per device, whereas **PROFIBUS PA** particularly takes into account the features required for process engineering, e.g. large data quantities and application in potentially explosive atmospheres.

User benefits can be found in the extremely high potentials for cost savings in all areas of the plant, covering configuring and commissioning, operation and maintenance, and up to later plant extensions.

Operation of the gas analyzers from a control system or separate PC is possible using the SIMATIC PDM (Process Device Manager) operator input tool which is software executing under Windows and which can also be incorporated into the SIMATIC PCS 7 process control system. This permits clear display of both the incorporation of devices into the system and the complex parameter structure of the analyzers, permitting operation to be carried out simply by clicking.

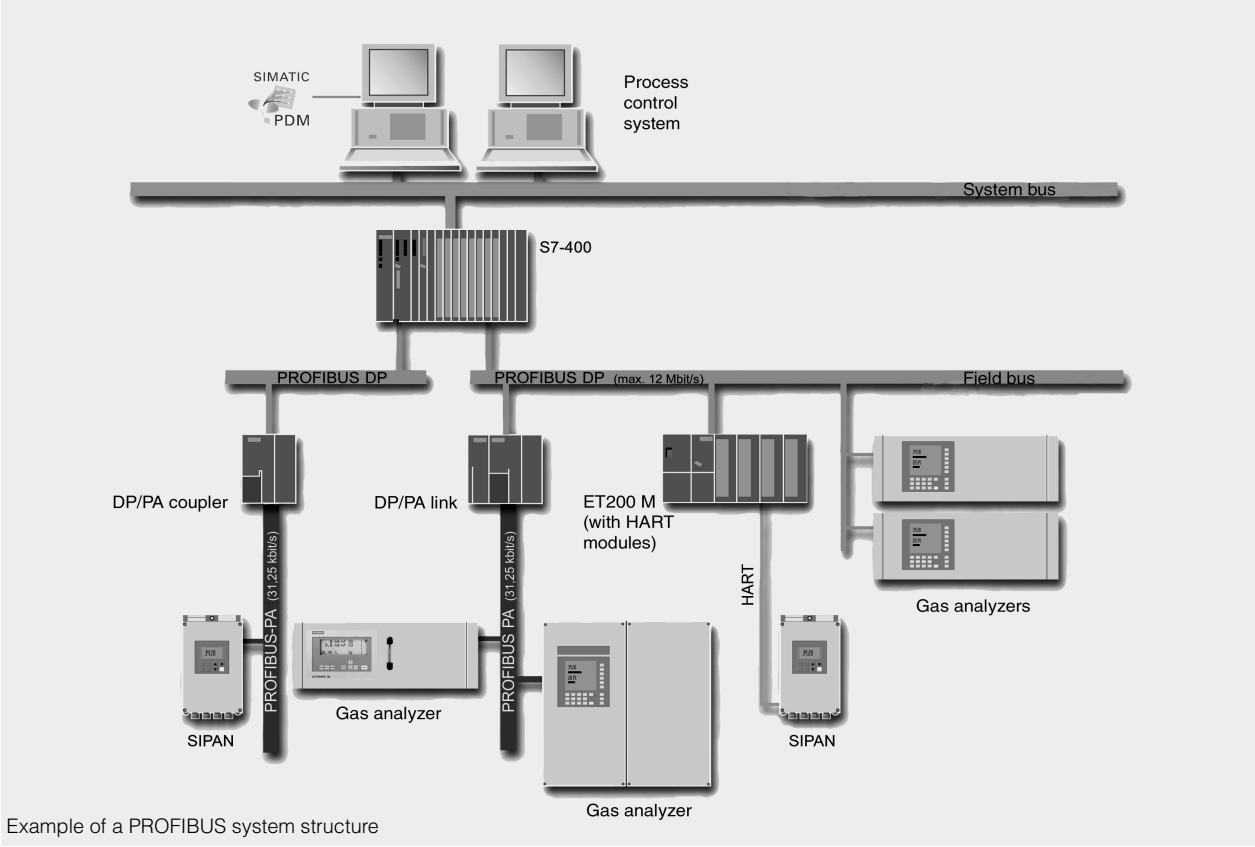

Example of a PROFIBUS system structure

The PROFIBUS user organization (PNO) is an independent international institution, and represents the interests of many vendors and users. In addition to services such as consultation, training and device certification, its prime task is the further development, standardization and promotion of the PROFIBUS technology. The definition of a binding functionality for a device class in a profile is a prerequisite for the uniform response of devices from different vendors, the so-called interoperability.The **profile for analyzers** was defined as binding at the end of 1999, thus guaranteeing the interaction of all PROFIBUS-based devices in a plant.

This profile defines the functionality of the analyzers in a block model: e.g. the **physical block** describes the measuring procedure, analyzer and vendor names, serial number and operating state (operation, maintenance). Various **functional blocks** contain the execution of specific functions such as the processing of measured values or alarms. The **transducer blocks** describe the functionality of the actual measuring procedure and its control, e.g. preprocessing of a measured value, correction of cross-interferences, characteristics, measuring ranges as well as switching and control procedures. Protocols define the data transmission between the stations on the bus.

A differentiation is made between **cyclic and acyclic services**. Cyclic services are used to transmit time-critical data such as measured values and statuses. The acyclic services permit the scanning or modification of device parameters during operation.

All gas analyzers of Series 6, (ULTRAMAT 6, ULTRAMAT/OXYMAT 6, OXYMAT 6, OXYMAT 61, FIDAMAT 6 and CALOMAT 6), as well as the ULTRAMAT 23 are suitable for PROFIBUS when fitted with the optional plug-in card.

AK interface (only OXYMAT 6, ULTRAMAT 6 and ULTRAMAT/OXYMAT 6)

The user benefits of numerous functions especially in the automotive industry, e.g. to operate a re-linearization

Unlike to PROFIBUS and ELAN, communication between only one unit and one PC is possible and operates according to the master-slave principle. The unit only transmits data on request with a command message, but always only command can be processed and answered.

Funktion 88 permits to call the menu and to set the parameters.

3.5 Technical Data

General	
Measured components	Max. 4, of which up to 3 infrared-sensitive gases plus oxygen
Measuring ranges	2 per channel
Characteristics	Linearized
Conformity	CE-identification to EN 61326/A1, EN 61010-1
Display	LCD with LED backlighting and contrast control, function keys 80 characters (4 lines/20 characters)
Position of use	Front panel vertical
Design, enclosure	
Weight	Approx. 10 kg
Degree of protection, 19" unit and desktop unit	IP20 to EN 60529
Electrical characteristics	
EMC interference immunity (Electro-Magnetic Compatibility), safety extra-low voltage (SELV) with safe isolation	According to standard requirements of NAMUR NE21 (08/98) or EN 50081-1, EN 50082-2
Power supply	100 V AC, +10%/-15%, 50 Hz, 120 V AC, +10%/-15%, 50 Hz, 200 V AC, +10%/-15%, 50 Hz, 230 V AC, +10%/-15%, 50 Hz, 100 V AC, +10%/-15%, 60 Hz, 120 V AC, +10%/-15%, 60 Hz, 230 V AC, +10%/-15%, 60 Hz
Power consumption	Approx. 60 VA
Electric inputs and outputs	
Analog output	per component, 0/2/4 to 20 mA, floating, max. load 750 Ω
Relay outputs	8, with changeover contacts, freely selectable, e.g. for range identification, loading capacity, 24 V AC/DC /1 A, floating, non sparking
Binary inputs	3, designed for 24 V, floating • Pump • AUTOCAL • Synchronization
Serial interface	RS 485
AUTOCAL function	Automatic analyzer calibration with ambient air (depending on measured component), cycle time adjustable from 0 (1) to 24 hours
Options	Supplementary electronics with 8 additional binary inputs and relay outputs, e.g. for external automatic calibration and for PROFIBUS PA or PROFIBUS DP

Ambient conditions	
Permissible ambient temperature	
• Operation	+5 to +45 °C
• Storage and transport	-20 to +60 °C
Permissible ambient humidity	< 90% RH (relative humidity) for storage and transport
Permissible pressure variations	700 to 1200 hPa
Sample gas pressure	
Messgasdruck	
• Without pump	unpressurized
• With pump	unpressurized suction mode, factory-adjusted with 2-m hose at sample gas outlet; an upper range value calibration is required in case of other venting conditions
Sample gas flow	72 to120 l/h (1.1 to 2 l/min)
Sample gas temperature	0 to 50 °C
Sample gas humidity	< 90% RH (relative humidity) no condensation

Technical data, infrared channel	
Measuring ranges	See Ordering Data
Smallest measuring range	See Ordering Data
Largest measuring range	See Ordering Data
Time response	
Warm-up period	Approx. 30 min (maximum accuracy is achieved after approx. 2 hours)
Response time (T_{90} time)	Dependent on the length of the sample gas cell, the sample line and the programmable damping
Damping (electronic time constant)	Selectable from 0 to 99.9 s
Measuring response	
Noise of output signal	< 1 % of smallest measuring range (see rating plate)
Display resolution	Max. 4.5 digits, dependent on selected measuring range; the number of digits after the decimal point can be selected
Resolution of output signal	< 0.1% of output signal span
Characteristic	Linearized
Linearity error	In largest measuring range: < 1% of full-scale value; in smallest measuring range: < 2% of full-scale value
Reproducibility	≤ 1% of smallest measuring range
Influencing variables	
Drift	
• With AUTOCAL	Negligible
• Without AUTOCAL	< 2% of smallest measuring range/week
Temperature	Max. 2% of smallest possible measuring range according to rating plate per 10 K with an AUTOCAL cycle time of 6 h
Atmospheric pressure	< 0.2% of measuring range per 1% change in pressure, corrected by internal pressure sensor
Power supply	< 0.1% of output signal span with a variation of ± 10%
Power frequency	± 2% of full-scale value with a frequency variation of ± 5%

Technical data, oxygen channel	
Measuring ranges	0 to 5% or 0 to 25% O_2, parameter can be set
Auxiliary gas	the oxygen sensor must not be used when the auxiliary gas contains the following components: H_2S, chlorine or fluorine compounds, heavy metals, aerosols, mercaptans, alkaline components (as e.g. NH_3 in % range)
Typical combustion exhaust gas	Influence: < 0.05% O_2
Lifetime	Approx. 2 years with 21% O_2; continuous operation < 0.5% O_2 will damage the measuring cell
Time response	
Response time (T_{90} time)	Dependent on dead time and selectable damping < 30 s with a sample gas flow of approx. 1.2 l/min
Measuring response	
Noise of output signal	< 0.5% of full-scale value
Display resolution	< 0.2% of full-scale value
Resolution of output signal	< 0.2% of output signal span
Reproducibility	≤ 0.05% O_2
Influencing variables	
Oxygen content	operation at times < 0.5 % O_2 distorts the measured value
Humidity	H_2O dew point≥ 2 °C; the oxygen sensor must not be used with dry sample gases (no condensation)
Drift	
• with AUTOCAL	Negligible
• without AUTOCAL	1 % O_2/year in air, typical
Temperature	< 0.5% O_2 per 20 K, referred to a measured value at 20 °C
Atmospheric pressure	< 0.2% of measured value per 1% pressure variation

3.6 Ordering data

			Order-No.
ULTRAMAT 23 gas analyzer for measurement of 1 infrared component and oxygen			**7MB2335 - ■■■ 0 - ■ AA ■**
Enclosure, version and gas paths 19“ unit for cabinet mounting			
Gas connections	Gas path	Internal sample gas pump	
6 mm pipe	Viton	without [2])	**0**
¼“ pipe	Viton	without [2])	**1**
6 mm pipe	Viton	with	**2**
¼“ pipe	Viton	with	**3**
6 mm pipe	SS, type No. 1.4571	without [2])	**6**
¼“ pipe	SS, type No. 1.4571	without [2])	**7**
Portable, in sheet-steel enclosure, 6 mm gas connections, gas path made of Viton, with integrated sample gas pump, condensation trap with safety filter on the front panel			**8**
Measured component	Possible with range classification code		
CO	D, E, F, G ... R, U, X		**A**
CO_2 [1])	D[8]), G[8]), H[8]), J[8]), K ... R		**C**
CH_4	H, L, N, P, R		**D**
C_2H_4	K		**F**
C_6H_{14}	K		**M**
SO_2	F ... L, W		**N**
NO	G ... J, V, W		**P**
N_2O[9])	E		**S**
R22	H		**U**
SF_6	H		**V**
Smallest measuring range	Largest measuring range		
0 to 50 vpm	0 to 250 vpm		**D**
0 to 100 vpm	0 to 500 vpm		**E**
0 to 150 vpm	0 to 750 vpm		**F**
0 to 200 vpm	0 to 1000 vpm		**G**
0 to 500 vpm	0 to 2500 vpm		**H**
0 to 1000 vpm	0 to 5000 vpm		**J**
0 to 2000 vpm	0 to 10000 vpm		**K**
0 to 0,5%	0 to 2,5%		**L**
0 to 1%	0 to 5%		**M**
0 to 2%	0 to 10%		**N**
0 to 5%	0 to 25%		**P**
0 to 10%	0 to 50%		**Q**
0 to 20%	0 to 100%		**R**
0 to 150 mg/m^3	0 to 750 mg/m^3		**U**
0 to 250 mg/m^3	0 to 1250 mg/m^3		**V**
0 to 400 mg/m^3	0 to 2000 mg/m^3		**W**
0 to 50 vpm	0 to2500 vpm		**X**
Oxygen measurement			
Without O_2 sensor			**0**
With O_2 sensor, not suitable with the SS type version			**1**
Power supply			
100 V AC, 50 Hz			**0**
120 V AC, 50 Hz			**1**
200 V AC, 50 Hz			**2**
230 V AC, 50 Hz			**3**
100 V AC, 60 Hz			**4**
120 V AC, 60 Hz			**5**
230 V AC, 60 Hz			**6**
Operating software, documentation [3])			
German			**0**
English			**1**
French			**2**
Spanish			**3**
Italian			**4**

Further versions Please add „-**Z**“ to Order No. and specify Order code	Order code
RS 485/RS 232 converter [4])	**A11**
Supplementary electronics with 8 binary inputs/outputs, PROFIBUS PA interface	**A12**
Supplementary electronics with 8 binary inputs/outputs, PROFIBUS DP interface	**A13**
Slide rails (2 rails, only possible for19" unit version)	**A31**
Set of Torx tools, socket spanner	**A32**
TAG labels (labeling to customer specification)	**B03**
Gas path for a short response time	**C01**
Chopper purge for gas connection 6 mm [8])	**C02**
Chopper purge for gas connection ¼" [8])	**C03**
Customer acceptance [5])	**Y01**
Drift recording	**Y03**
Measuring range in plain text [6])	**Y11**
Measurement of CO_2 in forming gas [10]) (only in relation with measuring range 0-20/0-100%) with optimized interference correction	**Y14**
Accessories	Order No.
CO_2 absorber cartridge	**7MB1933-8AA**
Retrofitting sets	
RS 485/Ethernet converter	**C79451-A3364-D61**
RS 485/RS 232 converter	**C79451-Z1589-U1**
Autocal function with 8 binary inputs/outputs and PROFIBUS PA	**A5E00056834**
Autocal function with 8 binary inputs/outputs and PROFIBUS DP	**A5E00057159**

1) For measuring ranges below 1% a CO_2 absorber cartridge can be used for the autocal (see Accessories).
2) Without separate zero gas input and without internal solenoid valve.
3) User language switchable.
4) Supplied separately (including interface description).
5) Customer acceptance: ½ day at factory in presence of customer.
   The following work is carried out: comparison of analyzer with ordering data: linearization check (zero, mid point value and full-scale value);reproducibility check with calibration gas (recording in each case on XT recorder, logging of results)..
6) Specific measuring range within min./max. range.
7) O_2 sensor in gas path of infrared measured component 1.
8) With chopper purge (with N_2 approx. 300 kPa for measuring ranges below 0.1 % CO_2 required), order in addition (see Order code C02 or C03).
9) Not suitable for stack emission.
10) CO_2 measurement in Ar or Ar/He (3:1); forming gas.

.

Ordering data

Order-No.

ULTRAMAT 23 gas analyzer
for measurement of 2 infrared components and oxygen

7MB2337 - ■■■■ 0 - ■■■■

Enclosure, version and gas paths
19“ unit for cabinet mounting

Gas connections	Gas path	Internal sample gas pump	
6 mm pipe	Viton, not separated	without [2])	**0**
¼“ pipe	Viton, not separated	without [2])	**1**
6 mm pipe	Viton, not separated	with	**2**
¼“ pipe	Viton, not separated	with	**3**
6 mm pipe	Viton, separated	without [2])	**4**
¼“ pipe	Viton, separated	without [2])	**5**
6 mm pipe	SS, type No. 1.4571, separated	without [2])	**6**
¼“ pipe	SS, type No. 1.4571, separated	without [2])	**7**
Portable, in sheet-steel enclosure, 6 mm gas connections, gas path made of Viton, with integrated sample gas pump, condensation trap with safety filter on the front panel			**8**

1st infrared component

Measured component	Possible with range classification code	
CO	D, E, F, G ... R, U, X	**A**
CO_2 [1])	D[8]), G[8]), H[8]), J[8]), K ... R	**C**
CH_4	H, L, N, P, R	**D**
C_2H_4	K	**F**
C_6H_{14}	K	**M**
SO_2	F ... L, W	**N**
NO	G ... J, V, W	**P**
N_2O[9])	E	**S**
R22	H	**U**
SF_6	H	**V**

Smallest measuring range	Largest measuring range	
0 to 50 vpm	0 to 250 vpm	**D**
0 to 100 vpm	0 to 500 vpm	**E**
0 to 150 vpm	0 to 750 vpm	**F**
0 to 200 vpm	0 to 1000 vpm	**G**
0 to 500 vpm	0 to 2500 vpm	**H**
0 to 1000 vpm	0 to 5000 vpm	**J**
0 to 2000 vpm	0 to 10000 vpm	**K**
0 to 0,5%	0 to 2,5%	**L**
0 to 1%	0 to 5%	**M**
0 to 2%	0 to 10%	**N**
0 to 5%	0 to 25%	**P**
0 to 10%	0 to 50%	**Q**
0 to 20%	0 to 100%	**R**
0 to 150 mg/m³	0 to 750 mg/m³	**U**
0 to 250 mg/m³	0 to 1250 mg/m³	**V**
0 to 400 mg/m³	0 to 2000 mg/m³	**W**
0 to 50 vpm	0 to 2500 vpm	**X**

Oxygen measurement	
Without O_2 sensor	**0**
With O_2 sensor, not suitable with the SS type version	**1**

Power supply	
100 V AC, 50 Hz	**0**
120 V AC, 50 Hz	**1**
200 V AC, 50 Hz	**2**
230 V AC, 50 Hz	**3**
100 V AC, 60 Hz	**4**
120 V AC, 60 Hz	**5**
230 V AC, 60 Hz	**6**

2nd Infrared component

Measured component	Possible with range classification code	
CO	D, E, F, G ... R, U, X	**A**
CO_2 [1])	D[8]), G[8]), H[8]), J[8]), K ... R	**C**
CH_4	H, L, N, P, R	**D**
C_2H_4	K	**F**
C_6H_{14}	K	**M**
SO_2	F ... L, W	**N**
NO	G ... J, V, W	**P**
N_2O[9])	E	**S**
R22	H	**U**
SF_6	H	**V**

Ordering data		Order-No.
ULTRAMAT 23 gas analyzer for measurement of 2 infrared components and oxygen		**7MB2337-■■■0-■■■**
Smallest measuring range	Largest measuring range	
0 to 50 vpm	0 to 250 vpm	**D**
0 to 100 vpm	0 to 500 vpm	**E**
0 to 150 vpm	0 to 750 vpm	**F**
0 to 200 vpm	0 to 1000 vpm	**G**
0 to 500 vpm	0 to 2500 vpm	**H**
0 to 1000 vpm	0 to 5000 vpm	**J**
0 to 2000 vpm	0 to 10000 vpm	**K**
0 to 0,5%	0 to 2,5%	**L**
0 to 1%	0 to 5%	**M**
0 to 2%	0 to 10%	**N**
0 to 5%	0 to 25%	**P**
0 to 10%	0 to 50%	**Q**
0 to 20%	0 to 100%	**R**
0 to 150 mg/m^3	0 to 750 mg/m^3	**U**
0 to 250 mg/m^3	0 to 1250 mg/m^3	**V**
0 to 400 mg/m^3	0 to 2000 mg/m^3	**W**
0 to 50 vpm	0 to 2500 vpm	**X**
Operating software, documentation [3])		
German		**0**
English		**1**
French		**2**
Spanish		**3**
Italian		**4**

Further versions	Order code
Please add „-**Z**“ to Order No. and specify Order code	
RS 485/RS 232 converter [4])	**A11**
Supplementary electronics with 8 binary inputs/outputs, PROFIBUS PA interface	**A12**
Supplementary electronics with 8 binary inputs/outputs, PROFIBUS DP interface	**A13**
Verbindungsrohr aus Edelstahl (1.4571) 6 mm, komplett mit Verschraubung	**A27**
Connection pipe made of stainless steel (1.4571) ¼“, complete with screwed gland	**A29**
Slide rails (2 rails, only possible for19" unit version)	**A31**
Set of Torx tools, socket spanner	**A32**
TAG labels (labeling to customer specification)	**B03**
Gas path for a short response time	**C01**
Chopper compartment purge for gas connection 6 mm	**C02**
Chopper compartment purge for gas connection ¼"	**C03**
Customer acceptance [5])	**Y01**
Drift recording	**Y03**
Measuring range in plain text [6])	**Y11**
Measurement of CO_2 in forming gas [10]) (only in relation with measuring range 0-20/0-100%)	**Y14**
Accessories	Order No.
CO_2 absorber cartridge	**7MB1933-8AA**
Retrofitting sets	
RS 485/Ethernet converter	**C79451-A3364-D61**
RS 485/RS 232 converter	**C79451-Z1589-U1**
Autocal function with 8 binary inputs/outputs and PROFIBUS PA	**A5E00056834**
Autocal function with 8 binary inputs/outputs and PROFIBUS DP	**A5E00057159**

1) For measuring ranges below 1% a CO_2 absorber cartridge can be used for the autocal (see Accessories).
2) Without separate zero gas input and without internal solenoid valve.
3) User language switchable.
4) Supplied separately (including interface description).
5) Customer acceptance: ½ day at factory in presence of customer.
The following work is carried out: comparison of analyzer with ordering data: linearization check (zero, mid point value and full-scale value);reproducibility check with calibration gas (recording in each case on XT recorder, logging of results)..
6) Specific measuring range within min./max. range.
7) O_2 sensor in gas path of infrared measured component 1.
8) With chopper purge (with N_2 approx. 300 kPa for measuring ranges below 0.1 % CO_2 required), order in addition (see Order code C02 or C03).
9) Not suitable for stack emission.
10) CO_2 measurement in Ar or Ar/He (3:1); forming gas.

Ordering data

Order-No.

ULTRAMAT 23 gas analyzer
for measurement of 3 infrared components and oxygen

7MB2338 - ■■■■ 0 - ■■■■

Enclosure, version and gas paths
19“ unit for cabinet mounting

Gas connections	Gas path	Internal sample gas pump	
6 mm pipe	Viton, not separated	without [2])	0
¼“ pipe	Viton, not separated	without [2])	1
6 mm pipe	Viton, not separated	with	2
¼“ pipe	Viton, not separated	with	3
6 mm pipe	Viton, separated	without [2])	4
¼“ pipe	Viton, separated	without [2])	5
6 mm pipe	Stainless steel, separated	without [2])	6
¼“ pipe	Stainless steel, separated	without [2])	7
Portable, in sheet-steel enclosure, 6 mm gas connections, gas path made of Viton, with integrated sample gas pump, condensation trap with safety filter on the front panel			8

1st and 2nd infrared components

	Smallest measuring range	Largest measuring range	
CO	0 to 500 vpm	0 to 2500 vpm	A A
NO	0 to 500 vpm	0 to 2500 vpm	
CO	0 to 2000 vpm	0 to 10000 vpm	A B
NO	0 to 1000 vpm	0 to 5000 vpm	
CO	0 to 1000 vpm	0 to 5000 vpm	A C
NO	0 to 1000 vpm	0 to 5000 vpm	
CO	0 to 1%	0 to 5%	A D
NO	0 to 1000 vpm	0 to 5000 vpm	
CO	0 to 250 mg/m^3	0 to 1250 mg/m^3	A K
NO	0 to 400 mg/m^3	0 to 2000 mg/m^3	
CO	0 to 10%	0 to 50%	B A
CO_2	0 to 10%	0 to 50%	
CO	0 to 10%	0 to 50%	B B
CO_2	0 to 0,5%	0 to 2,5%	
CO	0 to 20%	0 to 100%	B D
CO_2	0 to 20%	0 to 100%	
CO_2	0 to 5%	0 to 25%	B J
CO	0 to 100 vpm	0 to 500 vpm	
CO_2	0 to 10%	0 to 50%	B K
CO	0 to 0,5%	0 to 2,5%	
CO_2	0 to 5%	0 to 25%	C A
CH_4	0 to 1%	0 to 5%	
CO_2	0 to 5%	0 to 25%	C B
CH_4	0 to 2%	0 to 10%	

Oxygen measurement

Without O_2 sensor	0
With O_2 sensor, not suitable with the SS type version	1

Power supply

100 V AC, 50 Hz	0
120 V AC, 50 Hz	1
200 V AC, 50 Hz	2
230 V AC, 50 Hz	3
100 V AC, 60 Hz	4
120 V AC, 60 Hz	5
230 V AC, 60 Hz	6

3rd infrared component

Measured component	Possible with range classification code	
CO	D, E, F, G ... R, U, X	A
CO_2 [1])	D[8]), G[8]), H[8]), J[8]), K ... R	C
CH_4	H, L, N, P, R	D
C_2H_4	K	F
C_6H_{14}	K	M
SO_2	F ... L, W	N
NO	G ... J, V, W	P
N_2O[9])	E	S
R22	H	U
SF_6	H	V

Smallest measuring range	Largest measuring range	
0 to 50 vpm	0 to 250 vpm	D
0 to 100 vpm	0 to 500 vpm	E
0 to 150 vpm	0 to 750 vpm	F
0 to 200 vpm	0 to 1000 vpm	G
0 to 500 vpm	0 to 2500 vpm	H
0 to 1000 vpm	0 to 5000 vpm	J

Ordering data		Order-No.
ULTRAMAT 23 gas analyzer for measurement of 3 infrared components and oxygen		**7MB2338-■■■0-■■■**
0 to 2000 vpm	0 to 10000 vpm	**K**
0 to 0,5%	0 to 2,5%	**L**
0 to 1%	0 to 5%	**M**
0 to 2%	0 to 10%	**N**
0 to 5%	0 to 25%	**P**
0 to 10%	0 to 50%	**Q**
0 to 20%	0 to 100%	**R**
0 to 150 mg/m^3	0 to 750 mg/m^3	**U**
0 to 250 mg/m^3	0 to 1250 mg/m^3	**V**
0 to 400 mg/m^3	0 to 2000 mg/m^3	**W**
0 to 50 vpm	0 to 2500 vpm	**X**
Operating software, documentation [3])		
German		**0**
English		**1**
French		**2**
Spanish		**3**
Italian		**4**

Further versions	Order code
Please add „-**Z**“ to Order No. and specify Order code	
RS 485/RS 232 converter [4])	**A11**
Supplementary electronics with 8 binary inputs/outputs, PROFIBUS PA interface	**A12**
Supplementary electronics with 8 binary inputs/outputs, PROFIBUS DP interface	**A13**
Connection pipe made of stainless steel (1.4571) 6 mm, complete with screwed gland	**A27**
Connection pipe made of stainless steel (1.4571) ¼“, complete with screwed gland	**A29**
Slide rails (2 rails, only possible for19" unit version)	**A31**
Set of Torx tools, socket spanner	**A32**
TAG labels (labeling to customer specification)	**B03**
Gas path for a short response time	**C01**
Chopper compartment purge for gas connection 6 mm	**C02**
Chopper compartment purge for gas connection ¼"	**C03**
Customer acceptance [5])	**Y01**
Drift recording	**Y03**
Measuring range in plain text [6])	**Y11**
Measurement of CO_2 in forming gas [10]) (only in relation with measuring range 0-20/0-100%)	**Y14**
Accessories	Order-No.
CO_2 absorber cartridge	**7MB1933-8AA**
Retrofitting sets	
RS 485/Ethernet converter	**C79451-A3364-D61**
RS 485/RS 232 converter	**C79451-Z1589-U1**
Autocal function with 8 binary inputs/outputs and PROFIBUS PA	**A5E00056834**
Autocal function with 8 binary inputs/outputs and PROFIBUS DP	**A5E00057159**

1) For measuring ranges below 1% a CO_2 absorber cartridge can be used for the autocal (see Accessories).
2) Without separate zero gas input and without internal solenoid valve.
3) User language switchable.
4) Supplied separately (including interface description).
5) Customer acceptance: ½ day at factory in presence of customer.
The following work is carried out: comparison of analyzer with ordering data: linearization check (zero, mid point value and full-scale value);reproducibility check with calibration gas (recording in each case on XT recorder, logging of results)..
6) Specific measuring range within min./max. range.
7) O_2 sensor in gas path of infrared measured component 1.
8) With chopper purge (with N_2 approx. 300 kPa for measuring ranges below 0.1 % CO_2 required), order in addition (see Order code C02 or C03).
9) Not suitable for stack emission.
10) CO_2 measurement in Ar or Ar/He (3:1); forming gas.

3.7 Dimensional drawings

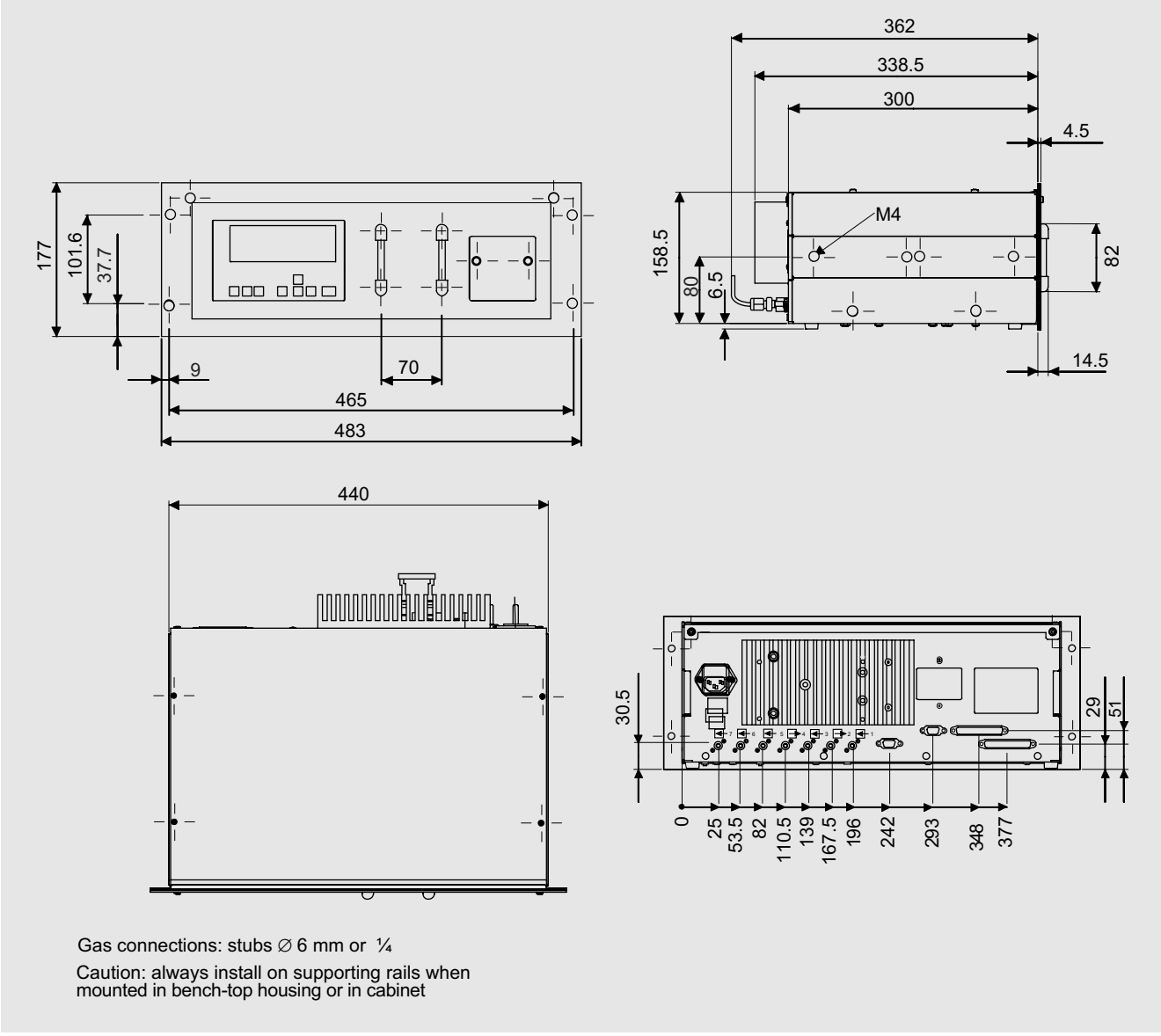

ULTRAMAT 23, 19“ unit, dimensions in mm

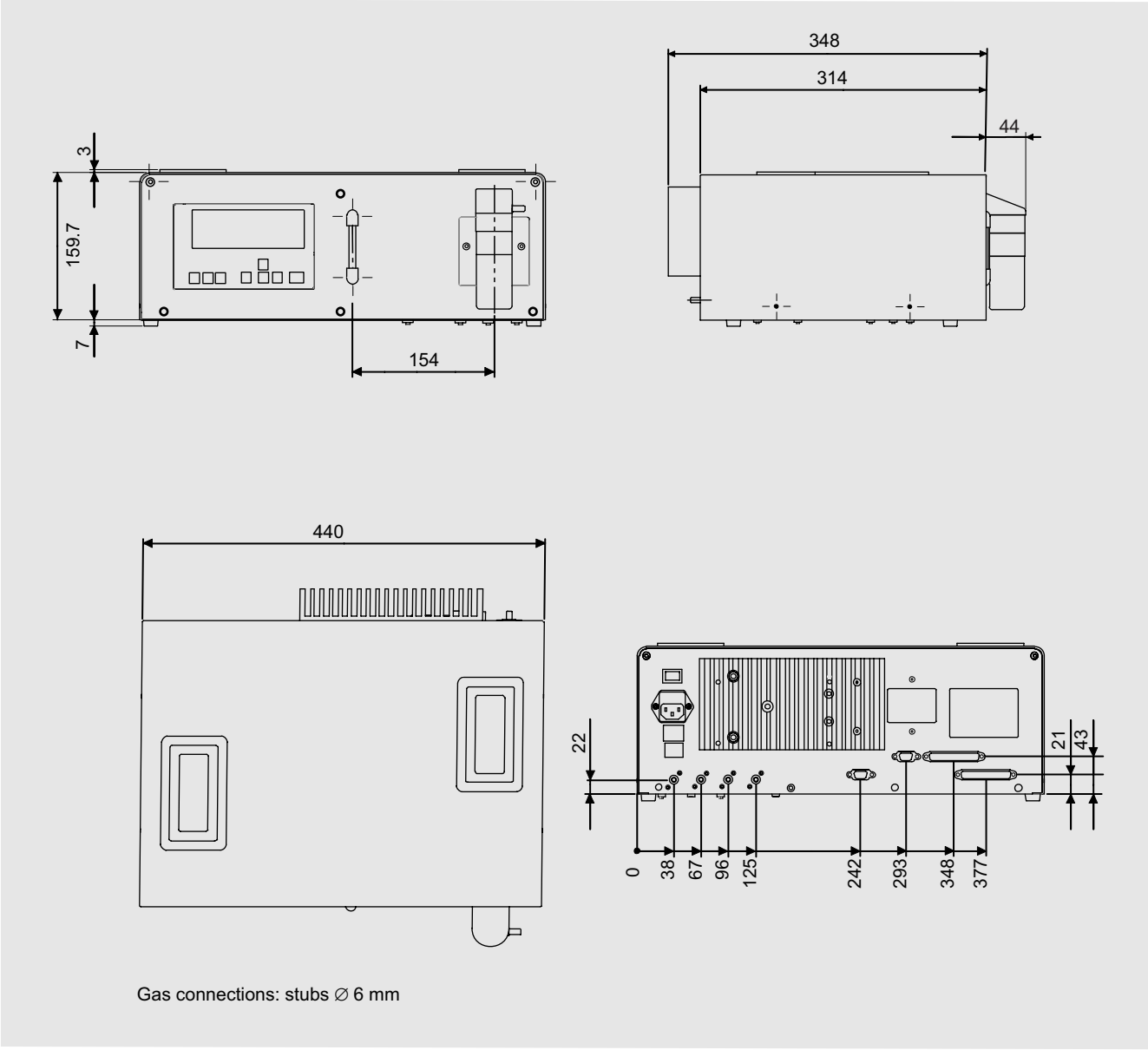

ULTRAMAT 23, desktop unit, dimensions in mm

3.8 Circuit diagrams (electric and gas connections)

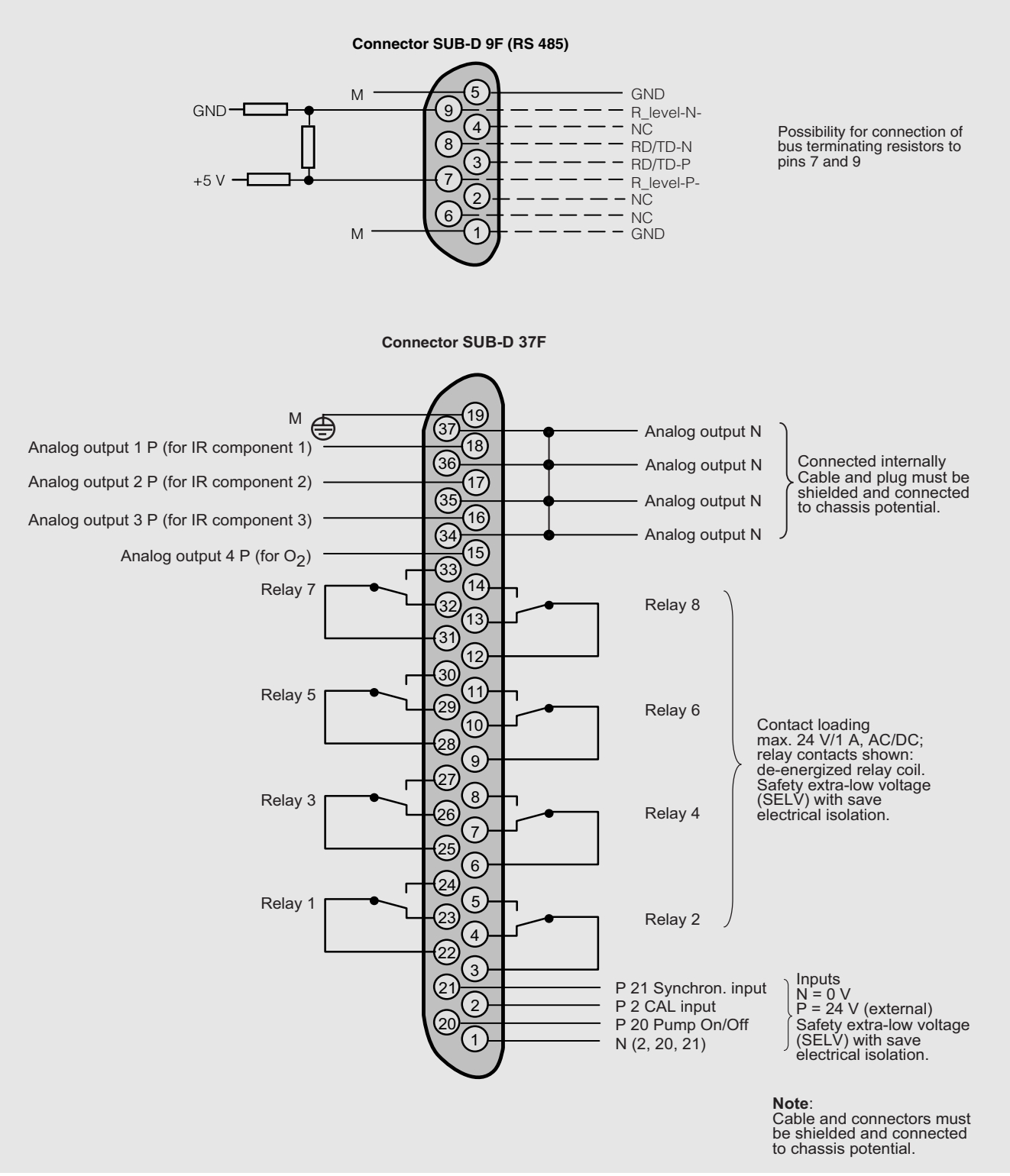

ULTRAMAT 23, pin assignment (standard)

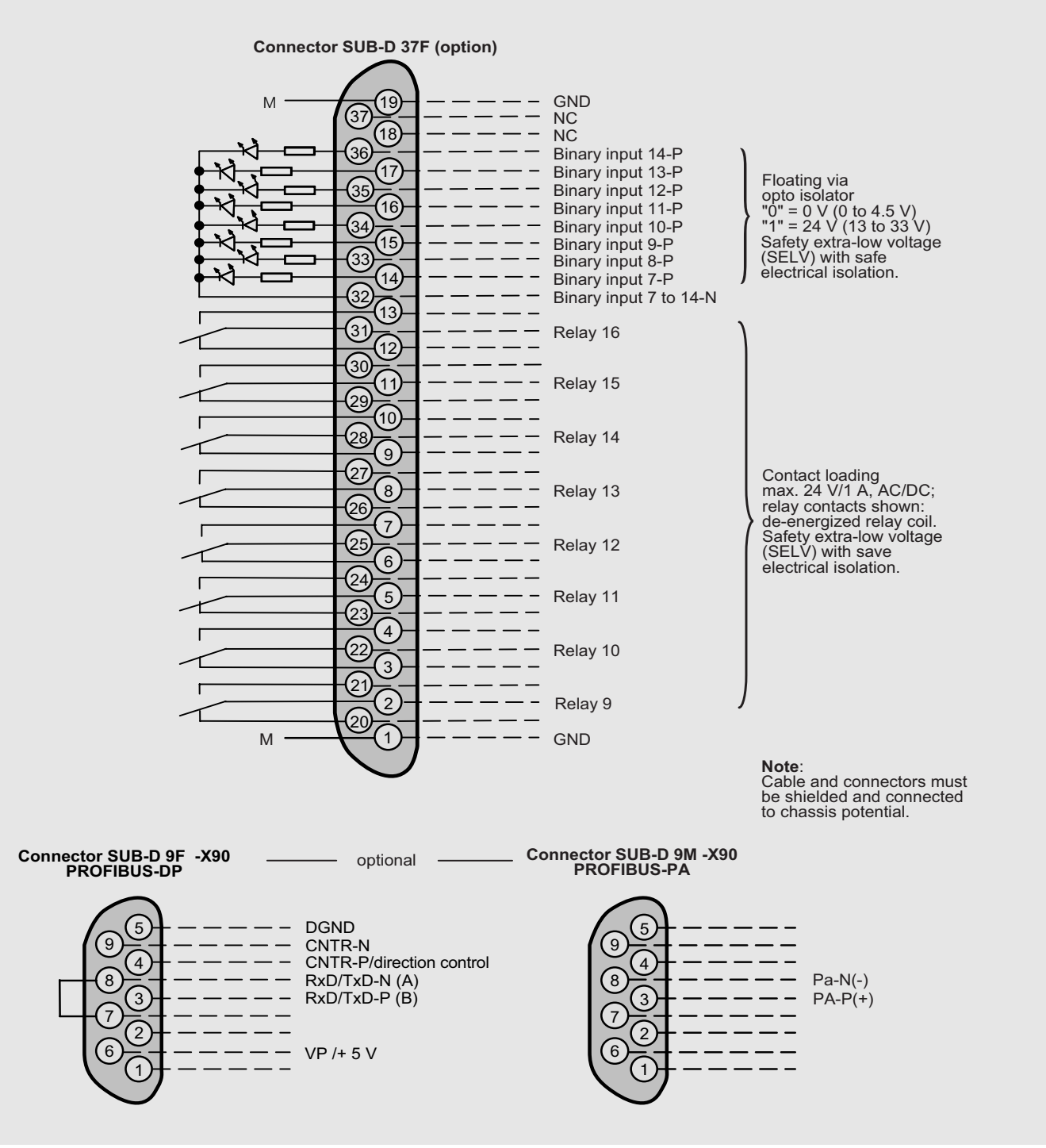

ULTRAMAT 23, pin assignment of the optional PROFIBUS interface board

19“ rack

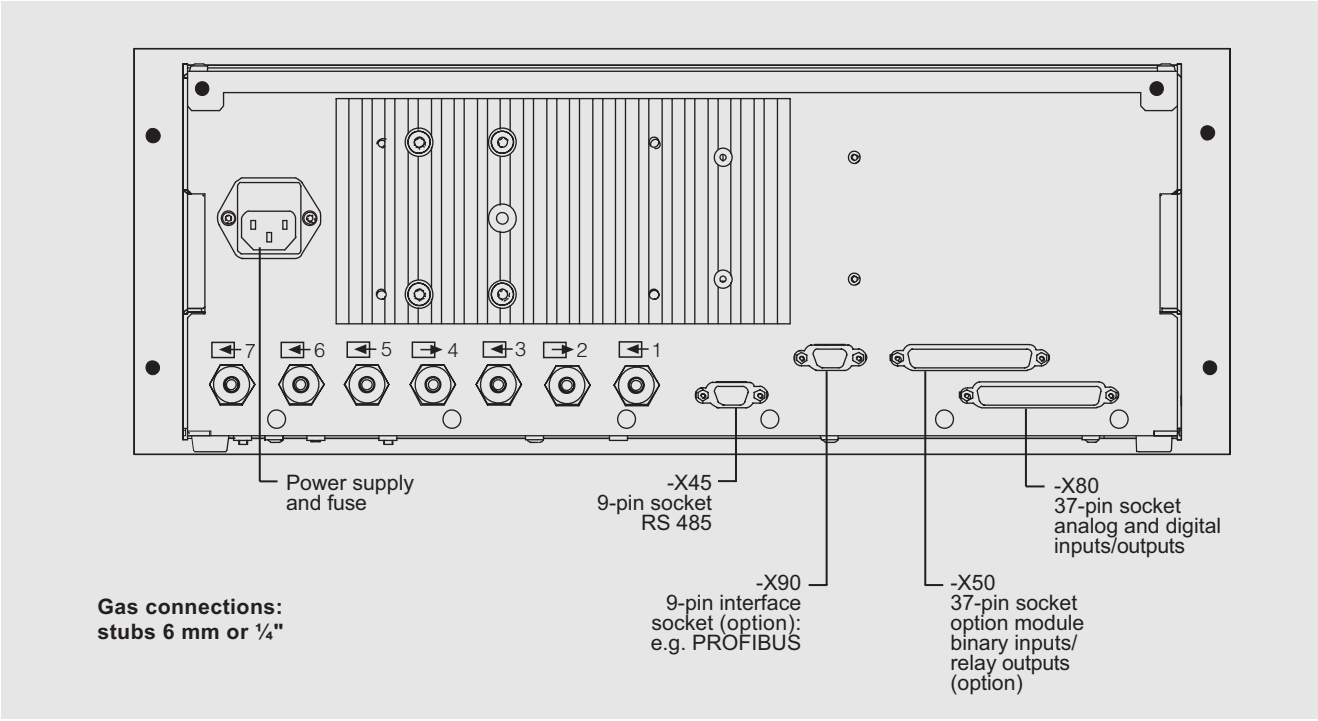

ULTRAMAT 23, 19“rack, e.g. one infrared component with oxygen measurement

Portable unit

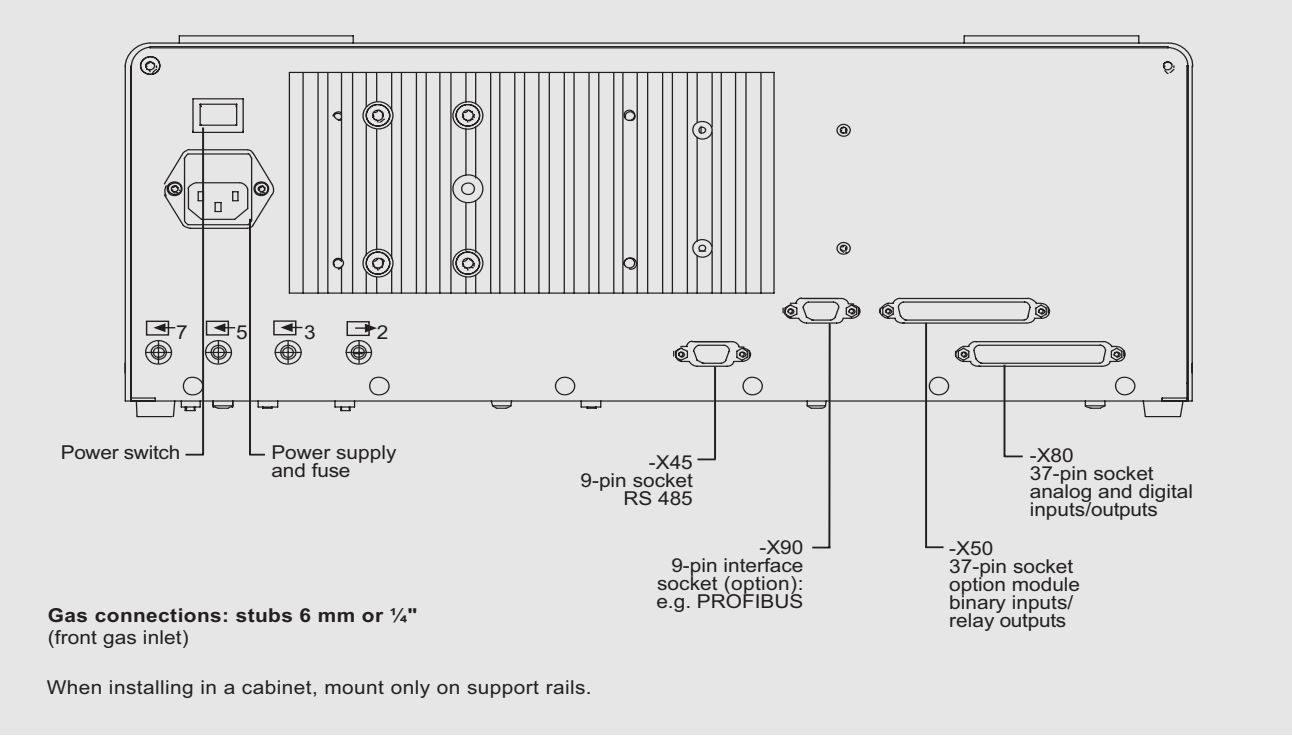

ULTRAMAT 23 portable unit, in sheet-steel housing, gas and electrical connections

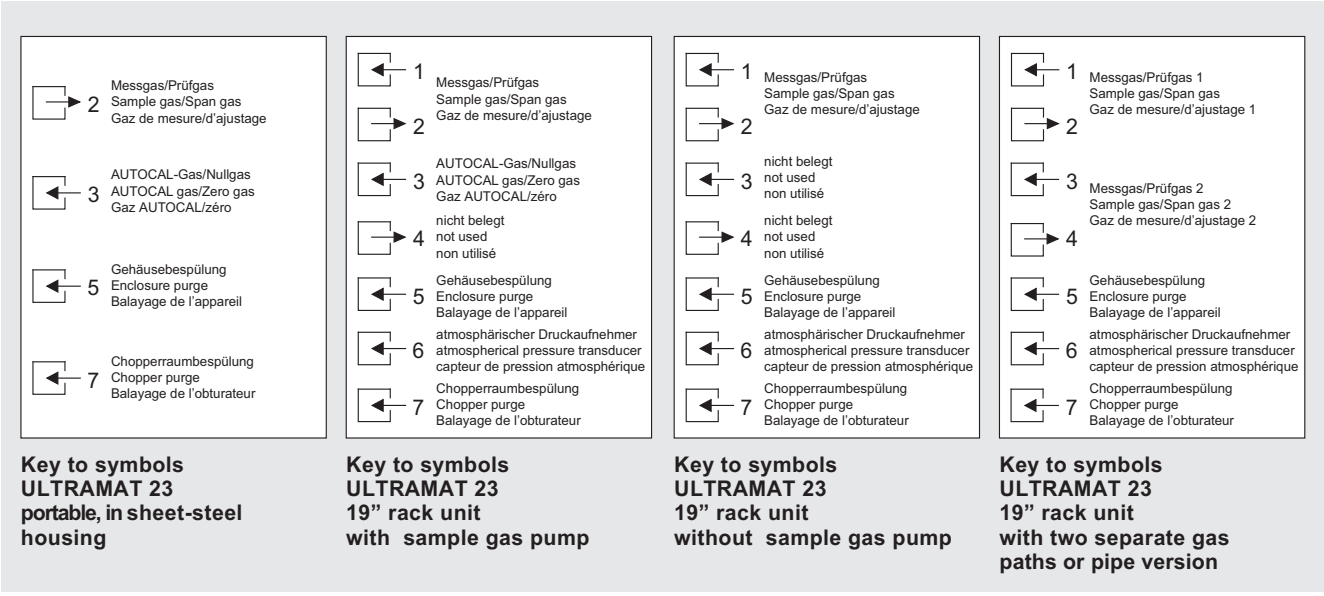

ULTRAMAT 23, designation of the different labels

Start-up 4

4.1	Safety Information	4-2
4.2	Preparations for Start-up	4-2
4.3	Start-up	4-3
4.3.1	AUTOCAL	4-3
4.3.2	Calibration	4-4
4.3.3	System Setup with Several Analyzers in Parallel	4-5

4.1 Safety Information

Warning

Certain parts in this analyzer carry dangerous voltages. The housing must be closed before switching on the analyzer.

Warning

The analyzer must not be used in hazardous areas. Explosive gas mixtures (e.g. flammable gases together with air or oxygen in a potentially explosive ratio) must not be measured.

Warning

if the sample gas could contain flammable components above the lower explosion limit (LEL), the analyzer version 'Gas path as pipe' is required (see chapter 8.4).

4.2 Preparations for Start-up

Checking for leaks

The pressure can be measured easiest using a U-tube manometer. Check for leaks in the sample gas paths as follows:

- Apply approx. 150 hPa (0.1 bar) to the sample gas path
- Wait for approx. 1 min until the temperature of the inflowing gas has stabilized
- Note the pressure
- Wait another 15 minutes, and note the pressure again.

  The sample gas path is sufficiently leak-proof if the pressure has changed by a maximum of 2 hPa (2 mbar) within 15 minutes.

Gas conditioning

Gas sampling devices, gas coolers, condensation traps, filters and any controllers, recorders, or indicators connected should be made ready for operation (refer to respective Instruction Manuals).

Check that the interfaces (see Chapter 3) are correctly assigned and parameterized.

4.3 Start-up

Switching on the power supply

Once you have established that the analyzer is set to the required voltage and that all connections have been made, connect it to the power supply. Switch the analyzer on and permit it to warm up (see Section 5.3).

4.3.1 AUTOCAL

General

The analyzer carries a calibration with the connected medium when switched on. This AUTOCAL calibrates the zero and sensitivity of the IR channels. If an O_2 sensor is present, its sensitivity is calibrated in addition.

☞ **Notice**

In analyzers without an O_2 sensor, the AUTOCAL can be executed with nitrogen, in the case of analyzers with an O_2 sensor, it must be executed with air. The supplied medium is selected depending on the analyzer configuration (gas connections) and cannot be parameterized using the software.

The chopper section purging must be connected in analyzers with certain CO_2 ranges. This can be achieved using nitrogen or synthetic air with an input pressure of 300 to 350 kPa (3 to 3.5 bar), and should be connected at least 30 minutes prior to switching on in order to guarantee good purging of the analyzer section.

You can manually trigger an AUTOCAL during operation by pressing the **CAL** key. The ULTRAMAT 23 can also execute an AUTOCAL cyclically, i.e. at adjustable, regular intervals (see below).

Duration

The duration of the AUTOCAL depends on various factors. It takes approx. 3 min and is comprised as follows:

- Twice the set purge time (see Section 5.8.4)
- Duration of internal electronic adjustment (corresponds to two-and-a-half times the time constant "T90 within"; see Section 5.9.3); if an O_2 sensor is used, the electronic adjustment is at least 60 s.

Cycle time

The cycle time of the AUTOCAL (time between two automatically triggered calibrations) can be set between 0 and 24 h. The cyclic calibration is switched off if you enter "0" as the parameter.

☞ **Notice**

During warm-up mode, however, an AUTOCAL is carried out twice, approx. 5 min and approx. 30 min after switching on.

In order to compensate variations in ambient temperature, you should select cycle times between 3 and 12 h.

4.3.2 Calibration

Use of calibration gas

Following installation of the analyzer, you can calibrate it using calibration gas (see Section 5.8). The calibration should be carried out with a gas containing a sufficient concentration of the measured component (between 70 and 100 % of the full-scale value in N_2 or synthetic air).

Caution

The calibration gas is connected via the sample gas inlet.

Carrying out a calibration

- Make sure that the gas flow is between 1.2 and 2.0 l/min.
- The analyzer must have been in operation for at least 30 minutes before commencing with measurements since a good stability of the analyzer section is only guaranteed after this time (99 % value).

Compensation of temperature influence

The compensation of the temperature influence is stored in the EEPROM in the ULTRAMAT 23. Modifications can only be made in the factory.

Noise suppression

Any noise which may occur can be suppressed by adjusting various time constants (see Section 5.9).

The calibration should be repeated every six to twelve months depending on the ambient conditions.

4.3.3 System Setup with Several Analyzers in Parallel

Example 1 **Both analyzers with internal pump and solenoid valve switching between sample gas and zero gas for AUTOCAL**

The cyclic AUTOCAL of the master device triggers an AUTOCAL in parallel for the slave device via its digital output SYNC and the digital input SYNC of the slave device.

The simultaneous connection between the digital output SYNC of the slave device and the digital input SYNC of the master device guarantees that zero gas is always passed **simultaneously** through both analyzers.

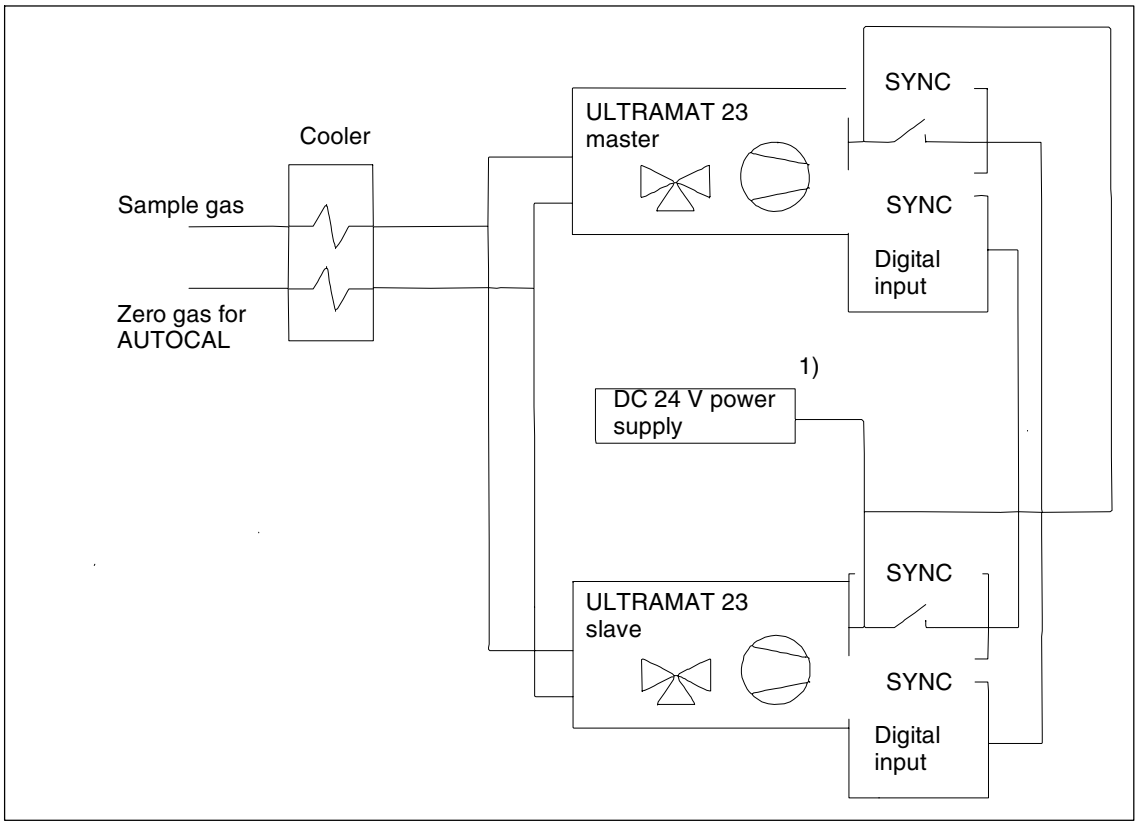

Fig. 4-1 Example with internal pump and solenoid valve switching
1) Protective extra-low voltage with safe electrical isolation (SELV)

Parameter settings

Master:

- Enter the AUTOCAL cycle time, e.g.: 6 hours (see Section 5.8.4).
- Assign the function "Sync." to a relay (see Section 5.10.1.2).
- Assign the function "CAL/MEAS" to the digital input SYNC (see Section 5.10.1.3).

Slave:

- Set the AUTOCAL cycle time to "0" to prevent a cyclic AUTOCAL from being triggered (see Section 5.8.4).
- Assign the function "Sync." to a relay (see Section 5.10.1.2).
- Assign the function "activate CAL relay" to the digital input SYNC (see Section 5.10.1.3).

Example 2

Both analyzers without internal pump and without internal solenoid valve switching between sample gas and zero gas for AUTOCAL

Via a digital output, the master controls a solenoid valve for switching between sample gas and zero gas for the AUTOCAL.

The cyclic AUTOCAL of the master device triggers an AUTOCAL in parallel for the slave device via its digital output SYNC and the digital input SYNC of the slave device.

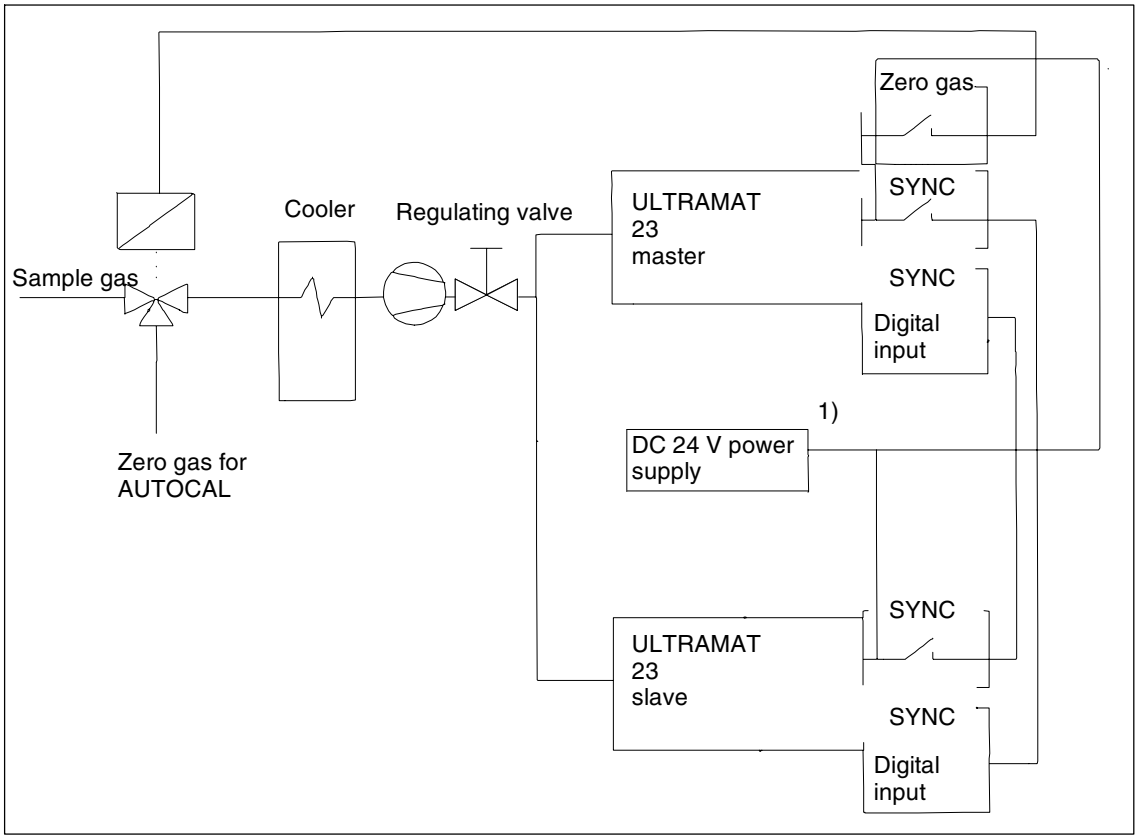

Fig. 4-2 Example without internal pump and solenoid valve switching
1) Protective extra-low voltage with safe electrical isolation (SELV)

Parameter settings

Master:

- Enter the AUTOCAL cycle time, e.g.: 6 hours (see Section 5.8.4).
- Assign the function "Sync." to a relay (see Section 5.10.1.2).
- Assign the function "Zero gas" to a relay (see Section 5.10.1.2).
- Assign the function "activate CAL relay" to the digital input SYNC (see Section 5.10.1.3).

Slave:

- Set the AUTOCAL cycle time to "0" to prevent a cyclic AUTOCAL from being triggered (see Section 5.8.4).
- Assign the function "Sync." to a relay (see Section 5.10.1.2).
- Assign the function "AUTOCAL" to the digital input SYNC (see Section 5.10.1.3).

Operation 5

5.1	General	5-3
5.2	Display and Input Panel	5-4
5.3	Warm-up Mode	5-7
5.4	Measuring Mode	5-8
5.5	Input Mode	5-8
5.5.1	Code Levels	5-9
5.5.2	Key Operations Step-by-step	5-10
5.5.3	Using the ESC key	5-12
5.6	Recoding the Analyzer	5-13
5.7	Analyzer Status	5-15
5.7.1	Analyzer Status: Status	5-15
5.7.1.1	Analyzer Status: Status: Logbook/Faults	5-15
5.7.1.2	Analyzer Status: Status: Maintenance Request	5-16
5.7.1.3	Analyzer Status: Status: AUTOCAL Deviation	5-16
5.7.1.4	Analyzer Status: Status: O2 Sensor Status	5-16
5.7.2	Analyzer Status: Diagnostic Values	5-17
5.7.2.1	Analyzer Status: Diagnostic Values: IR Diagnostic Values	5-17
5.7.2.2	Analyzer Status: Diagnostic Values: O2 Diagnostic Values	5-18
5.7.2.3	Analyzer Status: Diagnostic Values: Pressure Sensor Diagnosis	5-18
5.7.2.4	Analyzer Status: Diagnostic Values: Other Diagnostic Values	5-18
5.7.3	Analyzer Status: Factory Settings Hardware	5-19
5.7.4	Analyzer Status: Factory Settings Software	5-19
5.8	Calibration	5-21
5.8.1	Calibration: Calibrate IR Channels	5-21
5.8.1.1	Calibration: Calibrate IR Channels: Set Span Gas Values	5-21
5.8.1.2	Calibration: Calibrate IR Channels: Start with Range MR 1/2	5-22
5.8.2	Calibration: Calibrate O2 Sensor	5-22
5.8.2.1	Calibration: Calibrate O2 Sensor: O2 Cal. after Install	5-22
5.8.2.2	Calibration: Calibrate O2 Sensor: O2 Zero Cal.	5-23

5.8.3 Calibration: Calibrate Pressure Sensor 5-23
5.8.4 Calibration: AUTOCAL 5-24
5.9 Parameters 5-26
5.9.1 Parameters: Measuring Ranges 5-26
5.9.1.1 Parameters: Measuring Ranges: Switch Ranges 5-26
5.9.1.2 Parameters: Measuring Ranges: Change Ranges 5-27
5.9.1.3 Parameters: Measuring Ranges: Hysteresis 5-27
5.9.2 Parameters: Limit values 5-28
5.9.3 Parameters: Time Constants 5-29
5.9.4 Parameters: Pump/LCD Contrast 5-29
5.9.4.1 Parameters: Pump/LCD Contrast: Adjust Pump 5-30
5.9.4.2 Parameters: Pump/LCD Contrast: Adjust LCD Contrast 5-30
5.10 Configuration 5-33
5.10.1 Configuration: Inputs/Outputs/Pump 5-33
5.10.1.1 Configuration: Inputs/Outputs/Pump: Analog Outputs 5-33
5.10.1.2 Configuration: Inputs/Outputs/Pump: Assign Relays 5-35
5.10.1.3 Configuration: Inputs/Outputs/Pump: Binary/Sync Inputs 5-38
5.10.1.4 Configuration: Inputs/Outputs/Pump: Pump at CAL/MEAS 5-39
5.10.2 Configuration: Special Functions 5-39
5.10.2.1 Configuration: Special Functions: Codes/Language 5-39
5.10.2.2 Configuration: Special Functions: AUTOCAL Drift 5-40
5.10.2.3 Configuration: Special Functions: ELAN/PROFIBUS 5-41
5.10.2.4 Configuration: Special Functions: Fact. data/Res/Units 5-43
5.10.3 Configuration: Tests 5-44
5.10.3.1 Configuration: Tests: Display/Keys/Flow 5-44
5.10.3.2 Configuration: Tests: Inputs/Outputs 5-44
5.10.3.3 Configuration: Tests: Chopper/IR Source 5-46
5.10.3.4 Configuration: Tests: RAM Monitor 5-46
5.10.4 Configuration: Factory Configuration 5-46
5.11 Other Inputs 5-47
5.11.1 PUMP Key 5-47
5.11.2 CAL Key 5-47

5.1 General

The ULTRAMAT 23 has been parameterized and calibrated prior to delivery. However, a large number of parameters can be subsequently adapted to specific requirements using menu-based functions.

The following sections provide you with information on the display and input panel as well as the operating modes. You will learn how to scan analyzer statuses, how to calibrate the analyzer, and how you can enter or modify parameters.

The input sequences are described using the maximum configuration. If your analyzer has a different configuration (different measured components, number of infrared ranges, no oxygen measuring cell, no pump, no serial interface etc.), the explanations can be applied accordingly.

The used numbers must be considered as examples. They therefore probably differ from the values displayed on your analyzer. The corresponding line remains empty if components are not present in your analyzer.

User prompting

In the next sections, operation of the ULTRAMAT 23 is explained according to the following scheme:

Example menu 1: Example menu 2: Example menu 3

```
  ULTRAMAT 23
 Example of a display
```

12345

Example text.

Cross-reference.

The heading of the respective section indicates the complete menu path, starting from the main menu, on which the shown display can be reached (see Section 5.2). The various menu levels are separated from one another by colons.

The display, as it appears on the analyzer, is shown to the left of the text. The accompanying text explains the display, including inputs and instructions if necessary, e.g.:

- You can **start** the function using the **ENTER** key
- You can **terminate** the function using the **ESC** key

You can recognize the position of the cursor in the display in these instructions in that the corresponding character is printed in bold type and underlined (in this display: **E**xample).

The number on the right below the display (12345 in this case) is used as a cross-reference to the summaries of all menus and dialogs which proceed Sections 5.7 to 5.10 in order to facilitate the locating of the described display in these overviews.

A reference may be made that the respective function is protected by a **code level** (see Section 5.5.1) or is **specific to a component**. In the case of functions specific to a component, you must enter the measured components (up to four) for which you wish to call the respective function (see Section 5.5.2).

5.2 Display and Input Panel

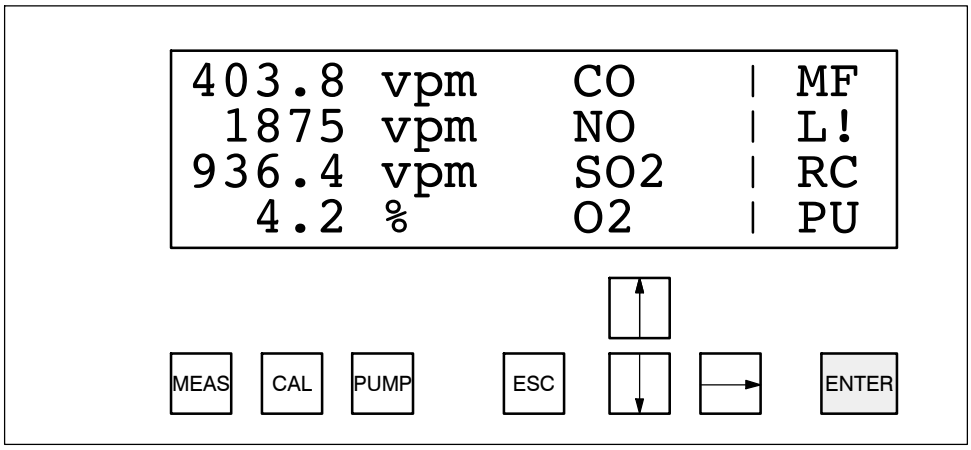

Fig. 5-1 Input panel consisting of display and keypad

The display is a backlit liquid crystal display with four lines with 20 characters each (5 x 8-dot matrix) and is covered by a foil. One line is reserved for each measured component in the display. The line displays from left to right: measured value, dimension and name of component. The last two positions of each line are reserved for displaying certain analyzer statuses. The meanings are as follows:

- M: **M**aintenance request
- F: **F**ault present
- L: **L**imit violated
- !: Fault logged which is no longer present
- R: **R**emote control
- C: Function **C**ontrol (analyzer uncoded, or access via RS485 serial interface, or AUTOCAL, or in approx. 30 min warm-up mode)
- P: **P**ump running
- U: **U**ncoded

User desktop

The ULTRAMAT 23 has a menu-based user desktop. The menu structures can always be represented as follows: MAIN MENU → Submenu 1 → Submenu 2 → Submenu 3 → Submenu 4.
Fig. Fig. 5-2 shows a diagram of the basic configuration of the user desktop.

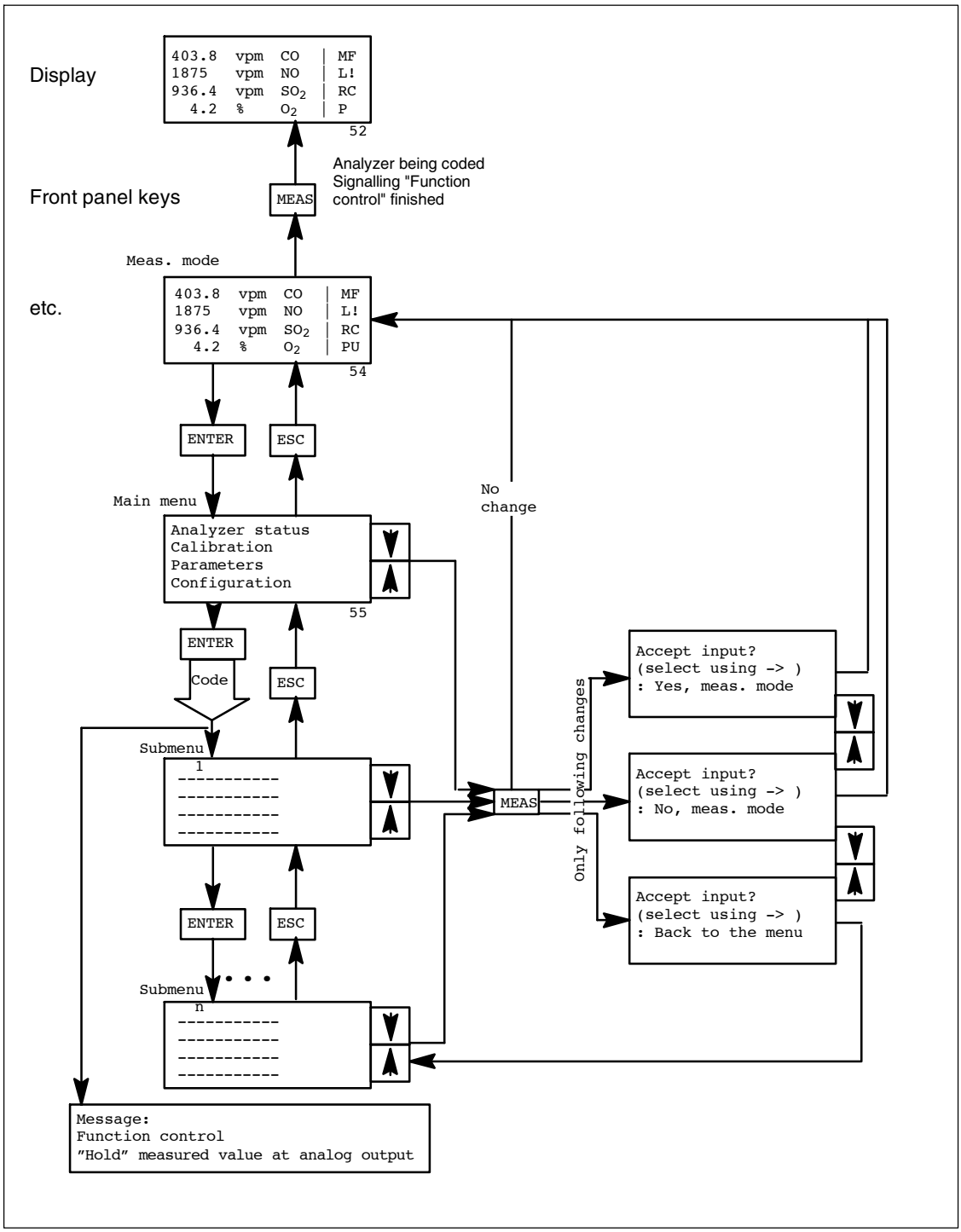

Fig. 5-2 Menu structure of ULTRAMAT 23

Key assignments Eight keys are available for operating the ULTRAMAT 23. These keys have the following meanings:

Table 5-1 Input keys

No.	Designation	Meaning	Function
1*	MEAS	Measure	Measure; abort input operations; leave input mode (from any menu level); switch from input mode to measuring mode and code analyzer again (cf. Section 5.6.1)
2	CAL	AUTOCAL	Automatic calibration; activation of calibration with ambient air or nitrogen
3*	PUMP	Pump	Switch internal sample gas pump on/off
4	ESC	Escape	In input mode: return by one menu level or cancel current input or cancel calibration*
5	↑	Arrow upwards	Increase selected digit; select previous menu item
6	↓	Arrow downwards	Reduce selected digit; select next menu item
7	→	Arrow to right	Move input cursor by one position to right (cyclic, i.e. the cursor is set to the left edge when the right edge has been reached)
8	ENTER	Enter	In measuring mode: switch over to input mode In input mode: import entered parameters or call a menu item

* The input is suppressed if certain conditions are fulfilled. A corresponding message is then output briefly on the display.

You can use the arrow keys to modify numerical values by increasing or decreasing the digit at which the cursor is located. The digits are modified continuously, i.e. 0 and 1 follow again after digit 9, and you can also decrement to 9, 8... following digit 0. The analyzer outputs the value FFF... if incorrect numbers are entered.

Use of the **MEAS**, **ESC** and **ENTER** keys is described using examples in Section 5.5. Use of the **CAL** and **PUMP** keys is described in Section 5.11.

5.3 Warm-up Mode

The analyzer can be in one of three operating modes:

- In the **warm-up mode,**
- in **measuring mode** (Section 5.4),
- or in **input mode** (Section 5.5)**.**

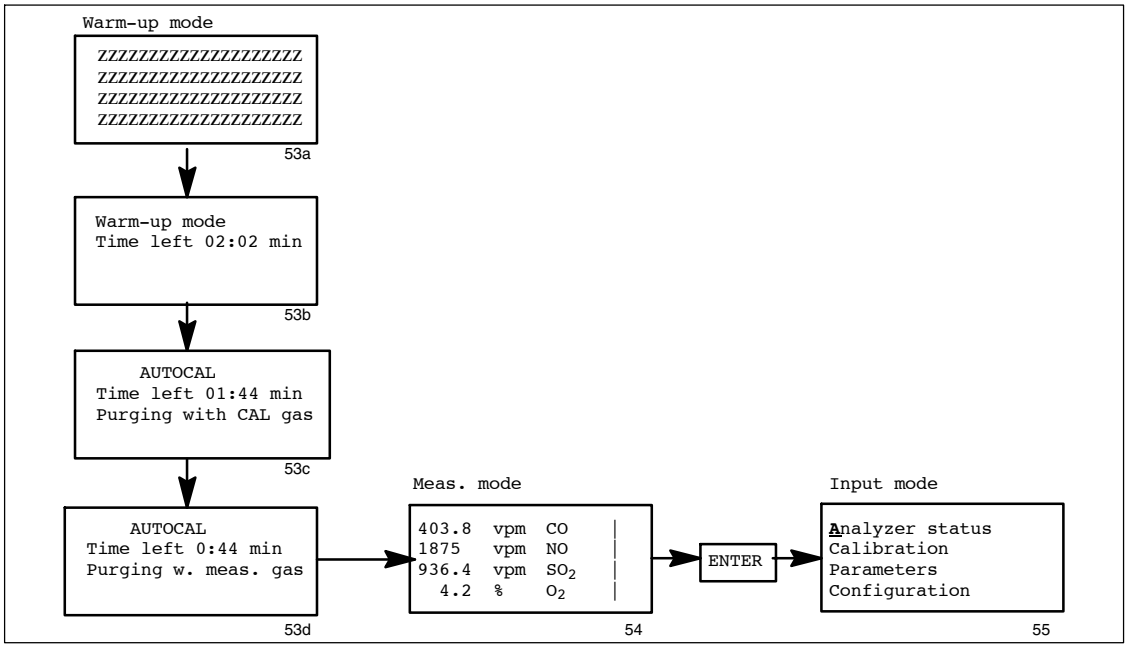

Fig. 5-3 Warm-up mode, measuring mode and input mode

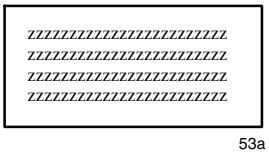

Immediately following switching-on, the ULTRAMAT 23 tests the display elements. During this test, all elements light up simultaneously for approx. five seconds.

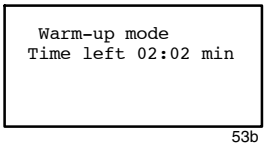

The adjacent display subsequently appears with the remaining warm-up time which is counted down in seconds to 00:00 (minutes : seconds).

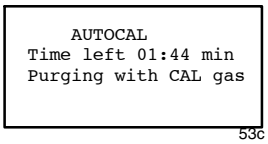

The analyzer initially carries out an AUTOCAL during the warm-up mode (see Section 4.3.1). The flow of AUTOCAL gas (nitrogen or air) is displayed in the bottom line, and the remaining time is shown in the line above this. This calibration cannot be interrupted.

```
     AUTOCAL
Time left 0:44 min
Purging w. meas. gas
```

53d

Following the calibration, the analyzer switches to purging with sample gas.

At the end of the purging phase, the analyzer switches to measuring mode; however, full measuring accuracy is only reached after approx. 30 min if a further AUTOCAL has been automatically carried out by the analyzer. The warm-up mode is then finished.

5.4 Measuring Mode

```
403.8  vpm  CO    |
1875   vpm  NO    |
936.4  vpm  SO2   |
  4.2  %    O2    |P
```

54

The measured components are output on the display together with their values and the units in mg/m^3, vpm or volume percent. With a change in the analyzer status, the corresponding letter appears in the last two columns ("P" in the example; see also Section 5.2). The analyzer remains in measuring mode until an AUTOCAL (automatic, remote-controlled or manual) is carried out or until you manually switch the analyzer to input mode (see Section 5.2).

```
*****  vpm  CO    |
1875   vpm  NO    |
936.4  vpm  SO2   |
 4.2   %    O2    |P
```

54

If '*****' occurs in measuring mode without a fault being present, this means:

- Concentration in sample gas more than 5 % higher than the largest measuring range
- Signal saturation resulting from excessively high sample gas concentrations

5.5 Input Mode

In input mode, you can view instrument parameters or calibrate and parameterize the analyzer.

Caution

The analyzer must only be calibrated and/or parameterized by trained specialists and with reference to this Instruction Manual.

```
Analyzer status
Calibration
Parameters
Configuration
```

55

Once you have selected input mode, the first menu to appear is the **main menu** which displays four menu items. You can use these to select the individual input functions of the ULTRAMAT 23:

Analyzer status

You can call submenus which provide information on the analyzer status, e.g. entries in the logbook, diagnostics data and factory data (see Fig. 5-4 for menu structure).

Calibration You can calibrate the zero and sensitivity of the analyzer using calibration gas (see Fig. 5-5 for menu structure).

Parameters You can match the analyzer functions to your specific application, e.g. by entering limits, measuring ranges and time constants (see Fig. 5-6 for menu structure).

Configuration You can define the assignments of the analyzer interfaces etc., e.g. the assignments of relays and current outputs (see Fig. 5-9 for menu structure).

5.5.1 Code Levels

The ULTRAMAT 23 is provided with two code levels to protect against unauthorized or unintentional inputs. As soon as you call a protected function for the first time, you will be requested to enter the defined three-digit code number.

☞ **Notice**

You should change the codes once you have become acquainted with operation of the ULTRAMAT 23 (see Section 5.10.2.1).

The lowest code level (level 1) is factory-set to "111", and the higher level (level 2) to "222".

The following are protected by code level 1:

- The dialogs "Logbook/faults" and "Maintenance requests" in the menu "Analyzer status", submenu "Status",
- the menu "Calibration" and
- the menu "Parameters".

The following is protected by code level 2:

- The menu "Configuration".

☞ **Notice**

If the analyzer requests you to enter code level 1, you can enter level 2 instead. Level 1 is then enabled simultaneously. Level 1 is automatically enabled as soon as the higher code level 2 has been enabled.

5.5.2 Key Operations Step-by-step

```
403.8  vpm  CO    |
1875   vpm  NO    |
936.4  vpm  SO2   |
 4.2   %    O2    |
```

This section describes operation of the analyzer with the keys using an example. The analyzer is in measuring mode (see Section 5.4).

```
Analyzer status
Calibration
Parameters
Configuration
```

- Change from measuring mode to input mode by pressing the **ENTER** key. You first access the main menu. A cursor flashes on the character "**A**" at the left edge of the first line.
- You can set the cursor to the start of each line using the ↑ and ↓ keys. Cursor movements are cyclic, i.e. if you move above the top edge of the display, the cursor appears again in the bottom line, and vice versa.
- Call the respective menu item by pressing the **ENTER** key.

```
Analyzer status
Calibration
Parameters
Configuration
```

The cursor is located at "**P**" when you have pressed the ↓ key twice.

- Now call the submenu "Parameters" by pressing the **ENTER** key.

```
Level 1 required
Please enter code
: 000
```

The adjacent display appears in which you will be requested to enter the code number for code level 1.

- You can change the value of the code digit to which the cursor is pointing using the ↑ and ↓ keys.
- Move to the next position of the code number using the → key. This function is also cyclic, and the cursor appears at the first position again when you move it beyond the last position

```
Level 1 required
Please enter code
: 111
```

- Close the code input by pressing the **ENTER** key.

```
Measuring ranges
Limit values
Time constants
Pump/LCD contrast
```

- Press the **ENTER** key again to call the submenu "Measuring ranges".

```
Choose component
: NO  1
```

- Now select components 1 to 4 for which the subsequently set ranges are to apply. Up to four components can be present.

```
Choose component
: CO  3
```

- If your analyzer is configured accordingly, you can select another component by pressing one of the ↑ or ↓ keys, e.g. component 3 in this case.

```
Switch ranges CO
Change ranges CO
Hysteresis CO
```

- Press the **ENTER** key. The analyzer offers further menu items which you can select by pressing one of the ↑ and ↓ keys.
- Branch to the selected function by pressing the **ENTER** key.

```
Switch ranges CO
Actual range :1
MR 1:0. 250  mg/m3
MR 2:0.1250  mg/m3
```

In this example, the adjacent display appears following selection of the function "Switch ranges CO". The first line contains the heading, the second line the parameter and its value to be changed; the cursor is positioned in this line. Only supplementary information is present in lines 3 and 4. To switch over the measuring range, proceed as follows:

- Press the **ENTER** key.
- The cursor jumps to the measuring range number which you can change using one of the ↑ and ↓ keys.
- The range definition is imported when you press the **ENTER** key again, and you return to the start of the line.

You cannot carry out any further settings here. To do so, you must leave the menu display again. This is possible:

- By pressing the **ESC** key, you then return by one step in the menu sequence

```
Save changes?
(choose with -> )
: continue
```

- By pressing the **MEAS** key. You then have the following possibilities:
  - To process the previous menu item further using **ENTER,**

```
Save changes?
(choose with -> )
: Yes, go to meas.
```

  - or return to measuring mode using ↑ or → and **ENTER**, where all modifications are imported which you have made since the last decoding operation,

```
Save changes?
(choose with -> )
: No, go to meas.
```

  - or return to measuring mode using ↓ and **ENTER** without importing the modifications.

Once you have carried out the above sequence on the analyzer, you are already acquainted with a number of important points for operation of the ULTRAMAT 23.

5.5.3 Using the ESC key

You can trigger two different functions by pressing the **ESC** key:

Firstly, you can cancel a commenced procedure, e.g.:

- The input of a number
- A calibration procedure with calibration gas
- Any function if a fault occurs, e.g. if the flow of sample gas to the analyzer is missing.

Secondly, you can use the **ESC** key to move one level higher in submenus ("scroll back"). This procedure is the opposite to selection of a submenu using the **ENTER** key ("scroll forwards"). If you repeatedly press the **ESC** key, you return back to the main menu step-by-step. If you press the **ESC** key again in the main menu, the analyzer switches over from input to measuring mode. All inputs are imported at the same time. However, you will not be asked to confirm the inputs.

An example will clarify this:

```
403.8  vpm  CO    |
1875   vpm  NO    |
936.4  vpm  SO2   |
 4.2   %    O2    | U
```

The analyzer is in measuring mode and is uncoded.

```
Analyzer status
Calibration
Parameters
Configuration
```

Switch from measuring mode to input mode using **ENTER**, select the menu item "Parameters" using the ↑ or ↓ key, and press **ENTER**.

```
Measuring ranges
Limit values
Time constants
Pump/LCD contrast
```

In this manner, you enter the first submenu. Press **ESC** and then **ENTER** again. You have returned by one level and then moved forwards by one level again; you are therefore in the same menu again.

```
403.8 vpm  CO    |
1875  vpm  NO    |
936.4 vpm  SO2   |
 4.2   %    O2   | U
```

Press the **ESC** key twice, you are back in measuring mode again.

5.6 Recoding the Analyzer

Following input of the code, inputs are possible until the analyzer is recoded.

☞ **Notice**

In order to code the analyzer again when the input procedures have been finished (to protect against unauthorized and unintentional interventions), press the **MEAS** key in measuring mode.

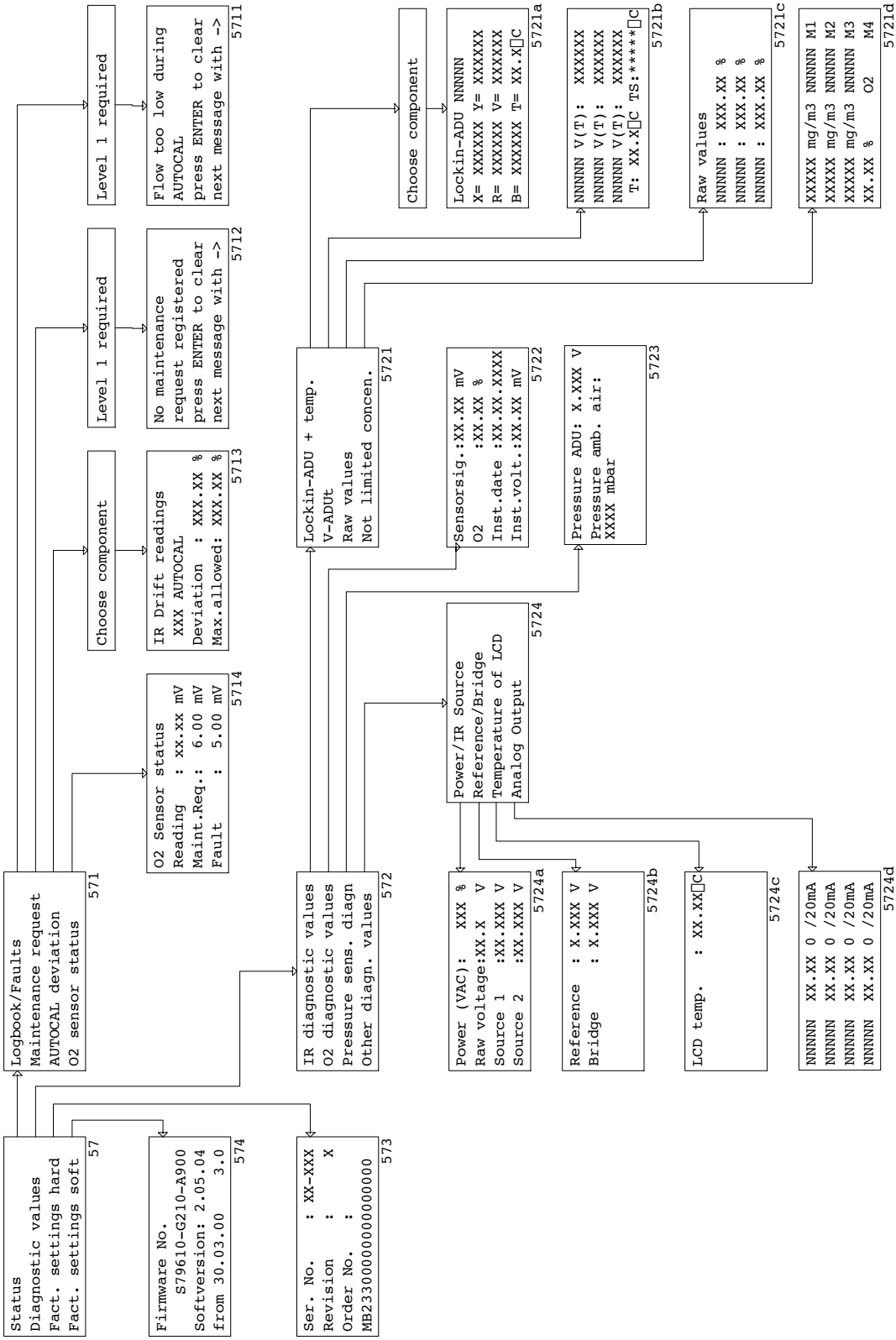

Fig. 5-4 Menu sequence for "Analyzer status"

5.7 Analyzer Status

Here you can view all analyzer data. The menu sequence in Fig. 5-4 shows all submenus which can be accessed from the menu "Analyzer status". The arrows lead by one menu item to the next lower menu/dialog level which is called by this menu item.

5.7.1 Analyzer Status: Status

```
Logbook/faults
Maintenance request
AUTOCAL deviation
O2 sensor status
```

571

In this menu you can call the status messages of the ULTRAMAT 23 via further menu items.

5.7.1.1 Analyzer Status: Status: Logbook/Faults

```
Mains voltage
beyond tolerance
Press ENTER to clear
Next message with ->
```

5711

This dialog displays a logbook of all recorded fault messages. Each type of fault message only appears once in the logbook and is output in alphanumeric text (see Chapter 6 for list of possible fault messages).

Viewing the logbook is protected by code level 1.

You can:

- **Display** all recorded faults in succession using the → key
- **Delete** the currently displayed fault message using the **ENTER** key, whereupon the next fault message appears, if present. You should delete those fault messages whose causes have been eliminated.

☞ **Notice**

By deleting the fault message you do not eliminate the cause of the fault (see Chapter 6)!

- A corresponding text is output when all stored fault messages have been displayed. Terminate display of the logbook using the → key.

☞ **Notice**

If the analyzer is in measuring mode, you can recognize the occurrence of a fault in that an **"F"** appears at the right edge. A **"!"** at the right edge signals that a fault has been logged which is no longer currently present.

5.7.1.2 Analyzer Status: Status: Maintenance Request

```
AUTOCAL drift
beyond tolerance
Press ENTER to clear
Next message with ->
```

5712

This dialog indicates the logged maintenance requests. A maintenance request is set if the values of certain parameters have reached defined limits, but the analyzer is still able to measure (e.g. AUTOCAL deviation or O_2 sensor status; also refer to later in this section). A corresponding message is output in alphanumeric text.

Access is protected by code level 1.

Operations in the maintenance request list (continue, delete) are carried out analogous to operations in the fault logbook.

☞ **Notice**

If the analyzer is in measuring mode, you can recognize the occurrence of a maintenance request in that an **"M"** appears at the right edge.

5.7.1.3 Analyzer Status: Status: AUTOCAL Deviation

```
IR drift readings
1 AUTOCAL
Deviation:  2.25 %
Max. allowed:    6 %
```

5713

This dialog indicates the deviation in setpoint between two AUTOCAL procedures. The parameters has the following meanings:

- The text in the two first lines provides information on the number of AUTOCAL procedures which have been carried out since the reference value for AUTOCAL was last set (see Section 5.10.2.2).
- **Deviation** is the measured deviation of the actual value from the reference value, displayed in % of the set measuring range (with autorange, range 1 is assumed). This deviation must not be above the set maximum value.
- **Max. allowed** is the maximum permissible value for the deviation. Refer to Section 5.10.2.2 to set the maximum value.

This function is specific to the component.

5.7.1.4 Analyzer Status: Status: O_2 Sensor Status

```
O2 sensor status
Reading:    12.02 mV
Maint. req:  6.00 mV
Fault:       5.00 mV
```

5714

The cell voltage of the measuring cell drops during operation as a result of the aging process of the sensor. An exact message is no longer possible if it has reached the minimum value of 5.0 mV (fault message). The O_2 measuring cell should therefore be replaced when below 6.0 mV (maintenance request).

- **Reading** is the current voltage of O_2 measuring cell
- **Maint. req** and **Fault** are the two minimum values which output a maintenance request or a fault message when fallen below.

5.7.2 Analyzer Status: Diagnostic Values

```
IR diagnostic values
O2 diagnostic values
Pressure sens. diagn
Other diagn. values
```

572

The diagnostic values which can be displayed provide important information for troubleshooting and adjustments. You can select four different function groups in this menu:

5.7.2.1 Analyzer Status: Diagnostic Values: IR Diagnostic Values

```
Lock-in ADU + temp.
V-ADUt
Raw values
Not limited concen.
```

5721

In this submenu, you can call the diagnostic values of the infrared measuring ranges:

```
Lock-in ADU SO2
X= 408399   Y= 103444
R= 444912   V= 444912
B= 10016    T= 41.0°C
```

5721a

- **ADU** are voltage and signal values of the analog-to-digital converter prior to temperature compensation. These values are specific to the component.

```
NO     V(T): 440206
CO     V(T): 505577
SO2    V(T): 494135
T: 42.2°C TS: *****°C
```

5721b

- **V-ADUt** are voltage and signal values of the analog-to-digital converter following temperature compensation. T in the bottom line corresponds to the temperature of the analyzer section, TS the temperature of the IR source (**not yet implemented.** "*****" = no measured value).

```
Raw values
NO  :       1.99 %
CO  :       0.27 %
SO2 :  5.08 %
```

5721c

- **Raw values** are the measured values in % of the full-scale value (= 100 %).

```
  18 mg/m3 NO     M1
  2  mg/m3 CO     M1
  14 mg/m3 SO2    M1
20.93 %    O2     M2
```

5721d

- **Not limited concen.** are the values as in measuring mode except that you can approximately display the concentrations here even with an upward or downward violation of the largest range. Negative values are also displayed (live zero). The current measuring range is output on this display in the last two columns.

5.7.2.2 Analyzer Status: Diagnostic Values: O_2 Diagnostic Values

```
Sensorsig:   12.02 mV
O2:           20.94 %
Date: 27.05.1996
Inst.volt.:  12.10 mV
```

5722

This dialog displays the diagnostic values of the optional oxygen sensor.

- **Sensorsig** is the current pessure-compensated voltage of the O_2 sensor in mV
- **O_2** is the current oxygen value (negative values are also possible)
- **Date** is the installation date of the O_2 sensor (see Section 5.8.2)
- **Inst.volt** is the pressure-compensated voltage of the O_2 sensor when it was installed.

5.7.2.3 Analyzer Status: Diagnostic Values: Pressure Sensor Diagnosis

```
Pressure ADU: 3.965 V
Pressure air: 999 mbar
```

5723

This dialog displays the diagnostic values of the pressure sensor (see Section 5.8.3). The displayed values have the following meaning:

- **ADU pressure** is the voltage of the pressure sensor measured at the output of the A/D converter.
- **Pressure air** is the current atmospheric pressure in mbar.

5.7.2.4 Analyzer Status: Diagnostic Values: Other Diagnostic Values

```
Power/IR source
Reference/Bridge
Temperature of LCD
Analog output
```

5724

This menu is used to call further diagnostic functions. You can call the following dialogs:

```
Power (VAC) :   101 %
Raw voltage :    30 V
Source 1    : 7.541 V
Source 2    :15.023 V
```

5724a

- **Power/IR source**
  - **Power:** Data on the mains voltage in % of the nominal value of the respective mains voltage (e.g.: 100 % corresponds to 230 V or 120 V).
  - **Raw voltage:** Raw voltage following the rectification
  - **Source 1, Source 2:** Data on the IR source voltage(s), in Volt provided the IR source is present.

```
Reference   :  2.513 V
Bridge      :  3.755 V
```

5724b

- **Reference/Bridge**
  - **Reference:** The reference voltage for the electronics of the analyzer.
  - **Bridge:** The supply voltage to the measuring bridge.

```
LCD temp.     : 34.9°C
```

5724c

- **LCD temperature**

  The temperature which determines the display contrast. Refer to Section 5.9.4.2 for adjustment of the LCD contrast.

```
NO   3.11 4 /20mA
CO   4.25 4 /20mA
SO2  4.04 4 /20mA
O2  17.82 4 /20mA
```

5724d

- **Analog output**

  The actual value of the output current in mA; (the dimension is not shown for space reasons) as well as the start-of-scale value (either 0, 2 or 4 mA) and the full-scale value (20 mA) of the output current range are displayed for each of the measured components. Refer to Section 5.10.2 for adjustment of the start-of-scale values.

5.7.3 Analyzer Status: Factory Settings Hardware

```
Ser. No. IK-001
Revision:
Order No.:
```

573

Factory settings are parameters which are already set on delivery and which cannot be modified by the user, such as the Serial No., revision and Order No. The hardware configuration and release version can be read here.

5.7.4 Analyzer Status: Factory Settings Software

```
Firmware No.:

Software version:
date
```

574

Factory settings are parameters which are already set on delivery and which cannot be modified by the user, such as the software/firmware release version. The software release version can be read here.

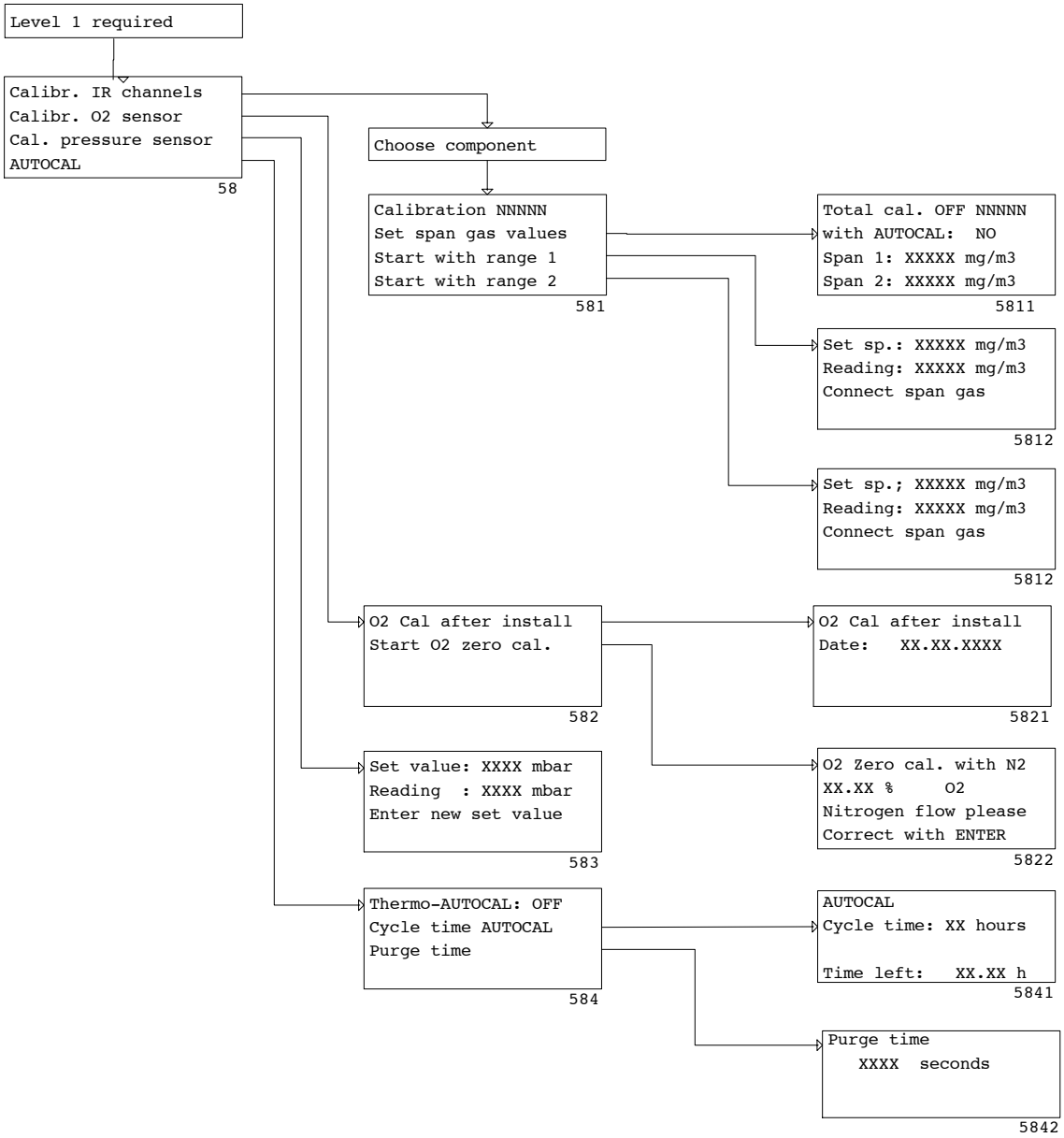

Fig. 5-5 Menu sequence for "Calibration"

5.8 Calibration

Using this function it is possible to calibrate the IR channels of the ULTRAMAT 23 using one or more calibration gases, and to reset the sensitivity. In addition, you can calibrate the oxygen sensor and the pressure sensor and also define the AUTOCAL parameters. Fig. 5-5 shows the associated menu sequence (see Section 5.7 for description of display elements).

Calibration is only possible if you have enabled code level 1.

5.8.1 Calibration: Calibrate IR Channels

```
Calibration SO2
Set span gas values
Start with range 1
Start with range 2
```

581a

In this menu you can:

- Set, in line 2, the setpoints of the calibration gases for the individual ranges or select a total or single calibration.
- Start a calibration procedure in lines 3 and 4.

This function is specific to the component.

5.8.1.1 Calibration: Calibrate IR Channels: Set Span Gas Values

```
Total cal.: OFF SO2
With AUTOCAL: NO
Span 1 :  386 mg/m3
Span 2 : 1920 mg/m3
```

5811

- **Total cal.:** In the first line of this dialog, you can select either a total or single calibration.
  - **ON** means that one range is calibrated and that this calibration is used for the other ranges (total calibration).
  - **OFF** means that each range is calibrated separately (single calibration, e.g. with different calibration gases).
- **With AUTOCAL**: You can define here whether you wish to carry out an AUTOCAL prior to the calibration procedure (**YES** or **NO**). An AUTOCAL is not necessary here if it has already been carried out shortly before the calibration procedure, e.g. a calibration procedure has taken place directly previously.
- **Span1, Span2**: Here you can enter the setpoints for the individual measuring ranges (these are the concentrations of the components in the respective calibration gas). They should be set to a value which is between 70 and 100 % of the full-scale value. If **Total cal.: ON** has been selected, the analyzer automatically uses the setpoint of range 2 for range 1. With **Total cal.: OFF** any input is possible between the start-of-scale and full-scale values of the respective range.

5.8.1.2 Calibration: Calibrate IR Channels: Start with Range MR 1/2

```
Set span:   386 mg/m3
Reading:      1 mg/m3
Connect span gas
```

5812

The analyzer interrupts the current measurement if you call one of these two dialogs. If the parameter **With AUTOCAL** was set to **OFF,** the analyzer expects an immediate flow of calibration gas; if the value is set to **ON**, an AUTOCAL is carried out prior to the flow of gas. The values of the setpoint and actual-value calibrations are displayed in the first two lines.

```
Set span:   386 mg/m3
Reading:      1 mg/m3
If the reading is
stable, press ENTER
```

5812a

If the analyzer recognizes a flow of calibration gas, the display changes as shown. If the measured value in the second line remains constant for more than approx. 10 s or does not change significantly, press the **ENTER** key.

```
Set span:   386 mg/m3
Reading:    380 mg/m3
Calibration o.k.
Press ESC to return
```

5812b

The analyzer then compares the setpoint and actual value (measured value) of the calibration. If the deviation between the values is within the tolerance, the adjacent message is output. (**o.k.**)

```
Set span:   386 mg/m3
Reading:      5 mg/m3
Tolerance not o.k.
Press ESC to return
```

5812c

If the actual value is approx. 20 % greater or smaller than the setpoint determined in the factory, the message **not o.k.** appears instead (no calibration possible).

5.8.2 Calibration: Calibrate O_2 Sensor

```
O2 cal. after install
Start O2 zero cal.
```

582

In this menu, you can call dialogs:

- To re-enter the installation date of the O_2 sensor
- To recalibrate the zero of the O_2 sensor.

5.8.2.1 Calibration: Calibrate O_2 Sensor: O_2 Cal. after Install

```
O2 cal after install
Date :01.01.2000
```

5821

Following the installation of a new sensor, you must re-enter the installation date.

The entered date is checked for plausibility. A calibration (AUTOCAL) is then carried out with ambient air.

A check is carried out during this procedure to establish whether the sensor voltage is greater than 9 mV. If this is not the case, a fault message "Sensor voltage too low".

5.8.2.2 Calibration: Calibrate O_2 Sensor: O_2 Zero Cal.

```
O2 zero ca. with N2
0.18 %
Nitrogen flow please
Calibrate with ENTER
```

5822

In this dialog you can recalibrate the zero point of the O_2 sensor using nitrogen. Connect a flow of nitrogen and commence the calibration using **ENTER**.

```
O2 zero cal with N2
1.25 %
>1% => default value
Press ESC to return
```

5822a

When you call the calibration function, the current oxygen value is displayed in the second line. If this does not deviate by more than 1 % from the set value, it is used as the new zero (this is not the case in the example display, see third line).

If the value is greater than 1 %, a fixed standard value is used instead.

☞

Notice

Please note that the exchange of gas takes place very slowly with low oxygen concentrations. Purge for 30 min, and then use the current value.

5.8.3 Calibration: Calibrate Pressure Sensor

```
Set value: 1000 mbar
Reading: 1007 mbar
Enter new set value
```

583

In the first line of this dialog, you can re-enter the setpoint of the pressure sensor. Measure a value e.g. using an accurate barometer, and change the setpoint in the first line if necessary.

5.8.4 Calibration: AUTOCAL

In this dialog you can change the following values of the AUTOCAL parameters:

```
Thermo-AUTOCAL:  OFF
Cycle time AUTOCAL
Purge time
```

584

- **Thermo-AUTOCAL**
  - **OFF:** An automatic AUTOCAL only takes place when the cycle time has expired (see below).
  - **ON:** An automatic AUTOCAL is carried out when the set cycle time has expired, and is also triggered in the case of changes in temperature > 8°C.

```
AUTOCAL
Cycle time:  6 hours

Time left 04:44 h
```

5841

- **Cycle time AUTOCAL**

  A further dialog is called, and you can set and modify the cycle time (the time between two AUTOCAL procedures triggered by the analyzer) in the second line. Valid cycle times are from 0 to 24 hours. In the display, 6 hours has been set as an example. A cyclic AUTOCAL is not carried out if 0 hours is set. The cycle time must not be set > 6 h if the analyzer is used in German systems subject to TA Luft and 13.BImSchV.

  The fourth line indicates when the next AUTOCAL will take place.

```
Purge time
_   80 seconds
```

5842

- **Purge time**

  If you call the menu item "Purge time", you can change the purge time (duration of flow with sample gas) in the second line of the displayed dialog. Valid purge times for analyzers with an O_2 sensor are 60 to 300 s, otherwise 0 to 300 s. There are minimum purge times depending on the measured components, and shorter times should not be used. 80 seconds has been selected in our example.

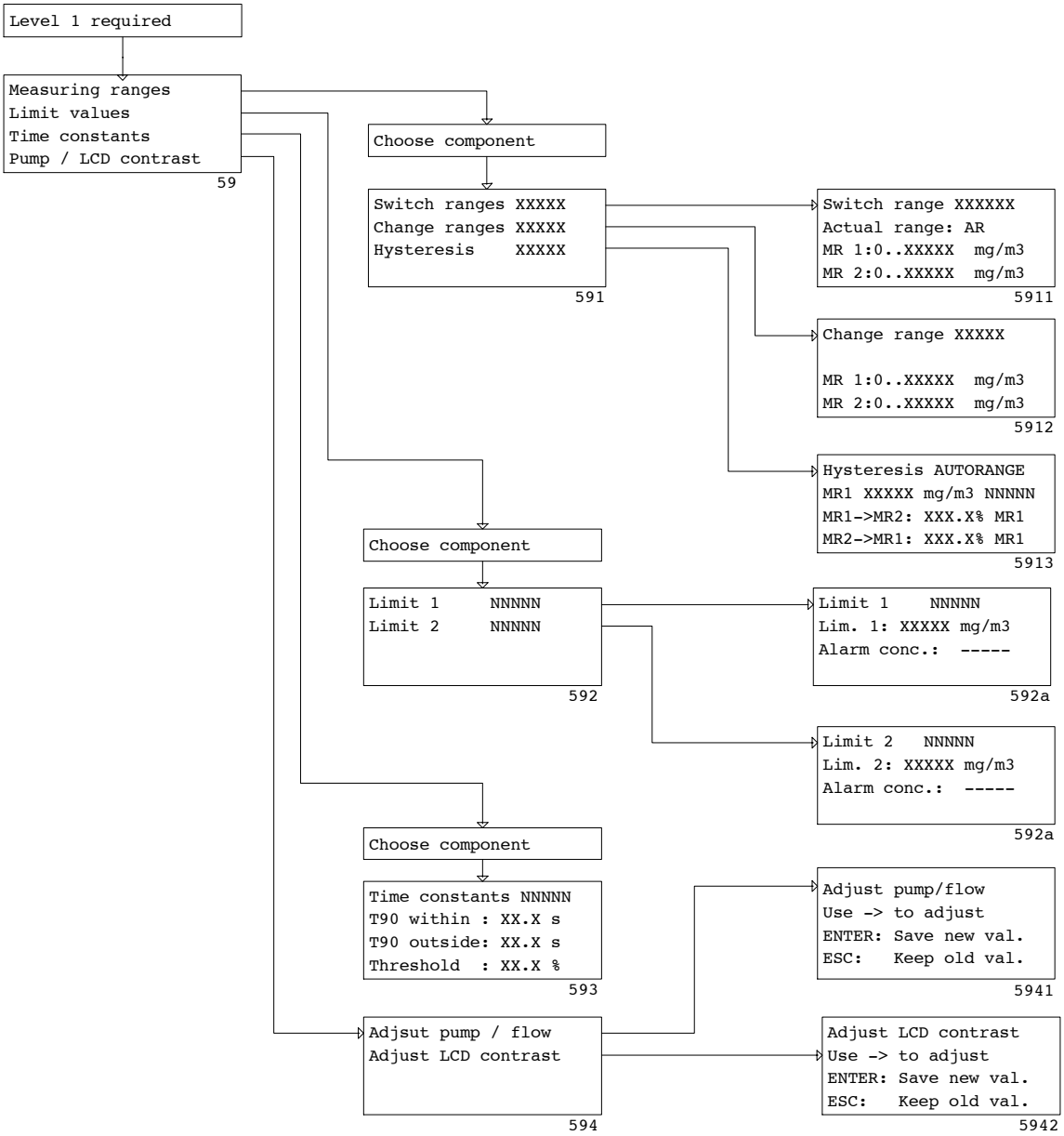

Fig. 5-6 Menu sequence for "Parameters"

5.9 Parameters

It is possible here for you to modify various analyzer parameters. These modifications can only be made within the limits which have been preset for your analyzer. The analyzer checks parameter changes for plausibility and rejects them if applicable. Fig. 5-6 shows the menu sequence (see Section 5.7 for explanation of display elements).

The menu "Parameters" is protected by code level 1.

5.9.1 Parameters: Measuring Ranges

```
Switch ranges SO2
Change ranges SO2
Hysteresis SO2
```

591

You can use this menu to select dialogs in order to permit or cancel the switching over between measuring ranges, to set the full-scale values and to define a hysteresis.

Notice

Please note that the range parameters only refer to the analog outputs (see Section 5.10). The display always shows the complete, physically possible range with the factory-set digital resolution.

5.9.1.1 Parameters: Measuring Ranges: Switch Ranges

```
Switch ranges SO2
Actual range: 1
MR 1:0..   400 mg/m3
MR 2:0..  2000 mg/m3
```

5911

In the second line of this dialog you can set the measuring ranges 1 or 2 or permit autoranging (automatic switching over between these two ranges). The parameter **Actual range** can have the following values:

- **1**: The analyzer is set to the smaller range (**MR 1**) and does not switch over the analog output (see Chapter 3, Pin Assignments) (see Fig.).
- **2**: The analyzer is set to the larger range (**MR 2**) and does not switch over the analog output.
- **AR**: The analyzer switches over automatically from one range to the other (AR = autorange). Refer to Section 5.9.1.3 for how to set the switch over criteria.

5.9.1.2 Parameters: Measuring Ranges: Change Ranges

```
Change ranges SO2

MR 1:0..    400 mg/m3
MR 2:0..   2000 mg/m3
```

5912

The full-scale values of the measuring ranges can be set in the third and fourth lines of this dialog. They must be present within the factory settings, i.e. if an analyzer is factory-set for a total range from 0 to 2000 mg/m^3, modifications are only possible within this range + 3 %, i.e. up to 2060 mg/m^3. In addition, the full-scale value of range 1 must not be smaller than - 3 % of the factory-set minimum permissible range, e.g. not smaller than 388 mg for 400 mg, and not greater than that of range 2.

5.9.1.3 Parameters: Measuring Ranges: Hysteresis

```
Hysteresis AUTORANGE
MR1  400 mg/m3 SO2
MR1->MR2: 100.0% MR1
MR2->MR1:  90.0% MR1
```

5913

In the third and fourth lines of this dialog, you can set the value at which the analyzer switches from one range to the other. The values are specified in % of the full-scale value of range 1 (**MR1**) (see Section 5.9.1.1) .

☞

Notice

The hysteresis is only active if the parameter **Actual range** has been set to the value **AR** (autorange) in the dialog "Switch ranges".

The two switch over points should be as far apart as possible, and the switch over point from MR1 to MR2 must be greater than that from MR2 to MR1. The following conditions have been assumed in the above display:

Your analyzer has two ranges: MR1 from 0 to 400 mg/m^3, MR2 from 0 to 2000 mg/m^3. The hystereses are defined as: **MR1->MR2** at 100 %; **MR2->MR1** at 90 %.

This means:

- If your analyzer is working in the smaller range (MR1), it switches over to the larger range (MR2) when a value greater than 400 mg/m^3 SO_2 is measured.
- If your analyzer is working in the larger range (MR2), it switches over to the smaller range (MR1) when a value less than 360 mg/m^3 SO_2 is measured (= 90 % of 400 mg/m^3).

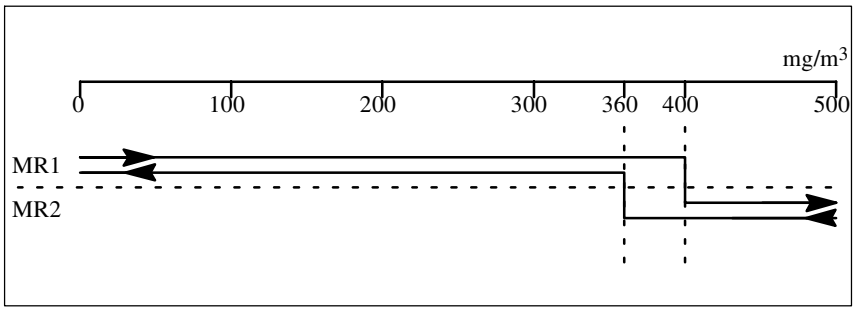

Fig. 5-7 Hysteresis curve

5.9.2 Parameters: Limit values

```
Limit 1 SO2
Limit 2 SO2
```

592

Two limits are assigned to each component, and can be set using this menu. A relay is triggered when the limits are violated (see Section 5.10.1.2). **Limit 1** is the lower limit, **Limit 2** the upper limit.

Notice

A set limit only triggers a relay contact if a relay has been assigned to the corresponding limit signal (see Section 5.10.1.2).

The limits are not updated:

- during the first warm-up phase
- during an AUTOCAL
- during the message: function check and analog output at 'Hold measured value' (see section 5.10.1.1)

```
Limit 1 SO2
Limit 1:  2000 mg/m3
Alarm at conc.:-----
```

592a

If you have selected "Limit 1" or "Limit 2", a dialog appears in which you can enter the lower or upper limit for each component. You can define the value in the second line, and the condition under which a contact is be triggered in the third (**Alarm at conc.:**):

- **High:** with upward violation
- **Low:** with downward violation
- **- - - - -:** no signal; see Fig.

5.9.3 Parameters: Time Constants

```
Time constant SO2
T90 within:
12 s
T90 outside:   3 s
Threshold:     3 %
```
593

You can use this function to set various time constants to suppress noise in the measured signal. During processing of the measured signals, these time constants reduce the noise by delaying the signal.

The time constant "T90 within" is effective within a parameterized interval whose threshold values are defined as a percentage of the smallest measuring range. The time constant dampens small changes in signal (e.g. noise), but becomes immediately ineffective if a fast change in signal exceeds a threshold. When this occurs, the signal is dampened by the time constant "T90 outside" until it falls below the threshold value again, whereupon "T90 within" becomes effective again.

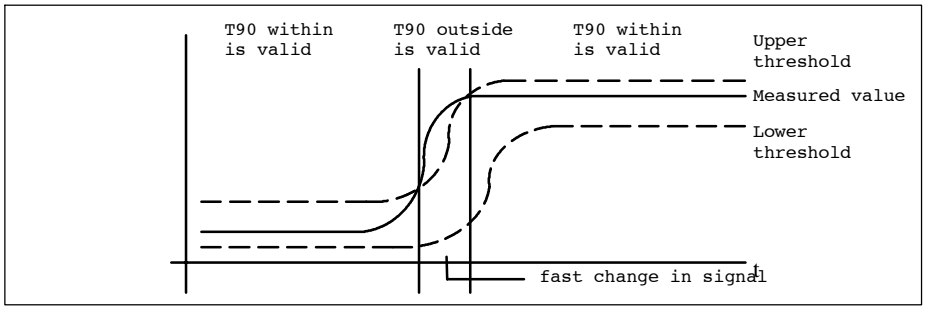

Fig. 5-8 Thresholds and time constants

The following values are possible for the time constants:

- **T90 within, outside**: 0.1 to 99.9 (s)
- **Threshold**: Data in %: 0 to 100 % of smallest range

5.9.4 Parameters: Pump/LCD Contrast

```
Adjust pump/flow
Adjust LCD contrast
```
594

You can use this menu to select two dialogs via which the pump capacity and the contrast of the LCD can be changed.

5.9.4.1 Parameters: Pump/LCD Contrast: Adjust Pump

```
Adjust pump/flow
Use  ->  to adjust
ENTER: save new val.
ESC: keep old value
```

5941

Here you can:

- **Increase** the pump capacity using the → or ↑ key
- **Decrease** the pump capacity using the ↓ key
- Store the set pump capacity using the **ENTER** key
- Cancel the input using the **ESC** key.

Changes to the pump capacity are shown on the flowmeter and directly in the menu display by the message OK or NOK.

5.9.4.2 Parameters: Pump/LCD Contrast: Adjust LCD Contrast

```
Adjust LCD contrast
Use -> to adjust
ENTER: save new value
ESC : keep old value
```

5942

Here you can:

- **Increase** the contrast using the → or ↑ key (darken the characters)
- **Decrease** the contrast using the ↓ key (brighten the characters)
- Store the set contrast using the **ENTER** key
- Cancel the input using the **ESC** key.

☞

Notice

Press the three keys ↑ , ↓ and → simultaneously to set an average contrast again.

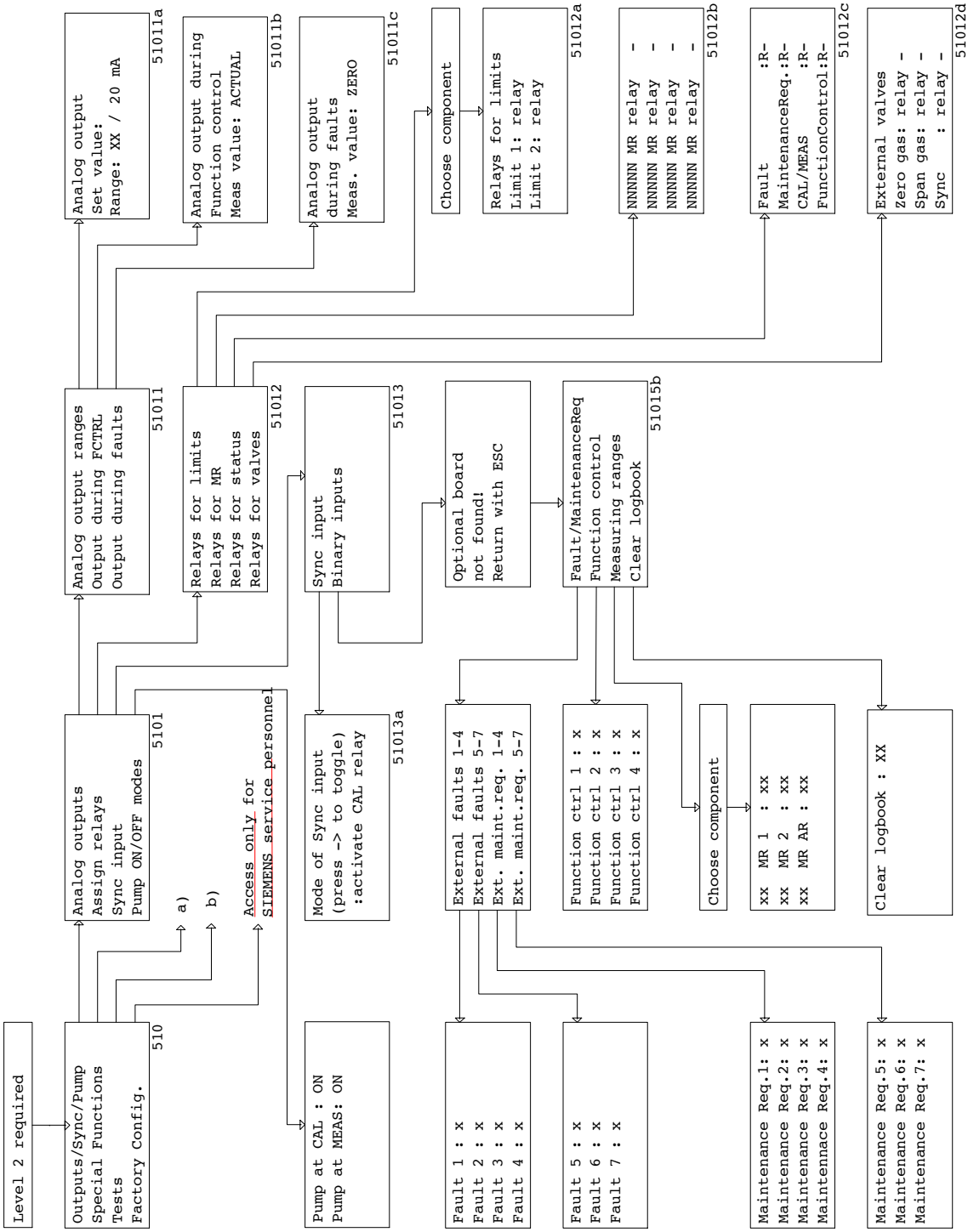

Fig. 5-9 Menu sequence for "Configuration"

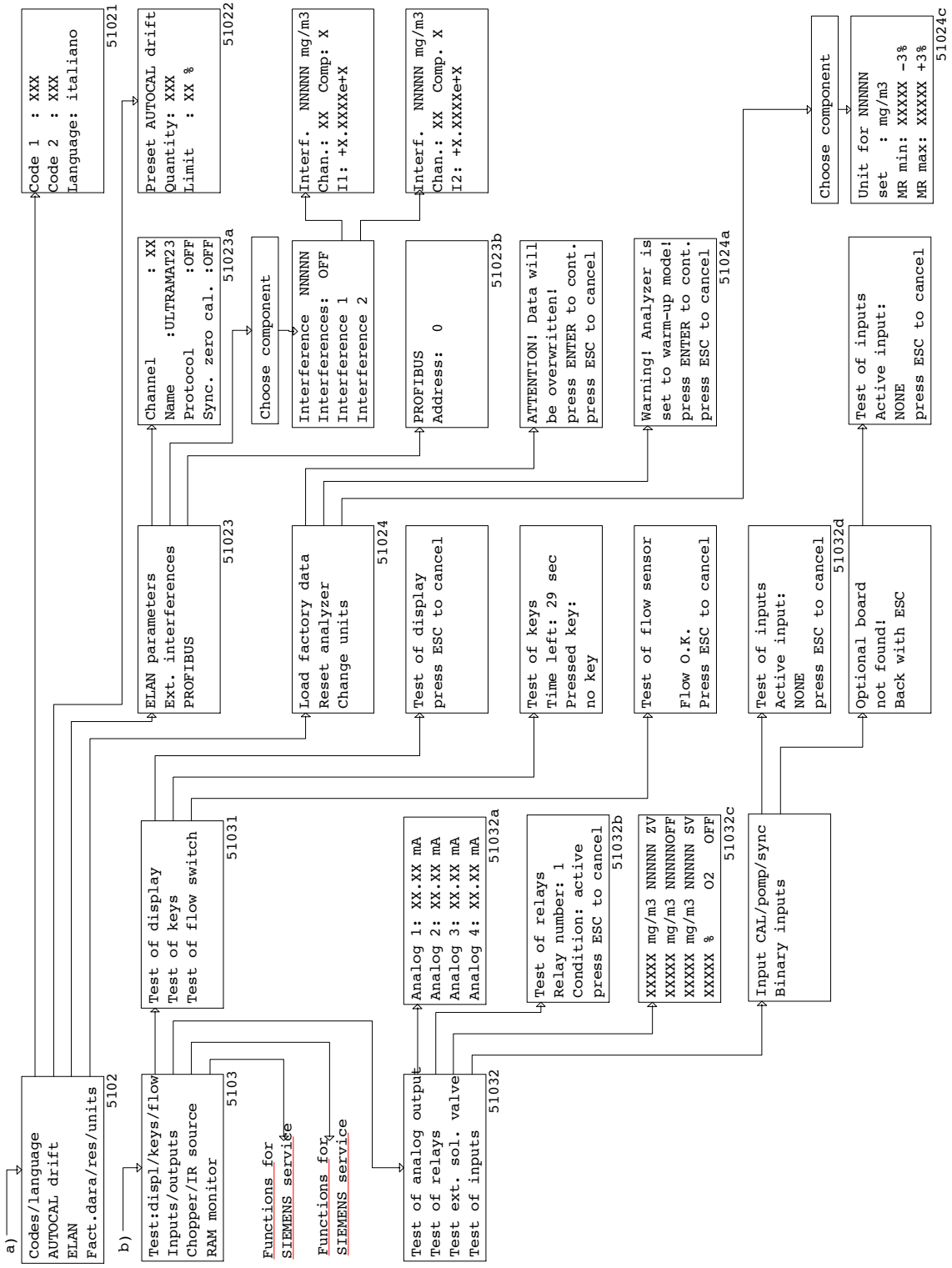

Fig. 5-10 Menu sequence for "Configuration" (continued)

5.10 Configuration

Here you can assign relays and inputs/outputs and use special functions and test functions. Fig. 5-9 shows the associated menu sequence (see Section 5.7 for explanation of elements).

This menu is protected by code level 2.

5.10.1 Configuration: Inputs/Outputs/Pump

```
Analog outputs
Assign relays
Binary-/Sync-Inputs
Pump ON/OFF modes
```

5101

This menu provides functions in order to define relays, inputs and outputs, the synchronization and the pump response during calibration and in measuring mode:

5.10.1.1 Configuration: Inputs/Outputs/Pump: Analog Outputs

```
Analog output ranges
Output during FCTRL
Output during faults
```

51011

You can use this menu to parameterize the analog outputs. This input always refers equally to all components.

```
Analog output
Set value :
Range  4 / 20 mA
```

51011a

- **Analog output ranges (start-of-scale value of analog output)**

  0, 2 , 4 mA or **NAM** can be set in the third line as the start-of-scale value of the analog current range; other values are not possible. If 2 or 4 mA are set, measured values below that are also output and appear in these cases as negative values (live zero).

  In the adjacent display, the start-of-scale value of the analog current range is set to 4 mA.

  The following tables represent the correlation between analog current outputs and measuring range limits.

Table 5-2 Analog current output for start-of-scale values

selectable	analog current
0 - 20 mA	0 mA
2 - 20 mA	2 mA
4 - 20 mA	4 mA
NAMUR - 20 mA	4 mA

Table 5-3 Analog output current for downward limiting of measured value

selectable	analog current
0 - 20 mA	0.0 mA
2 - 20 mA	0.0 mA
4 - 20 mA	0.0 mA
NAMUR - 20 mA	3.8 mA

Table 5-4 Analog output current for upward limiting of measured value

selectable	analog current
0 - 20 mA	21.0 mA
2 - 20 mA	21.0 mA 1)
4 - 20 mA	21.0 mA 1)
NAMUR - 20 mA	20.5 mA

1) if measuring range 2 is set to the maximum possible value, the limiting value of range 2 ... 20 mA is at 20.9 mA and of range 4 ... 20 mA at 20.8 mA.

```
Analog output during
function control
Meas. value: hold
```

51011b

- **Analog output during FCTRL (analog output during function control)**

The following measured value outputs are possible with the AUTOCAL procedure, in warm-up mode and in the uncoded state:

- **Hold:** The value measured directly prior to commencement is output unchanged. This also applies to the limits which are output (see section 5.9.2)
- **Actual:** The measured value is continuously updated.
- **Zero:** see following table:

selectable	analog current
0 - 20 mA	0 mA
2 - 20 mA	2 mA
4 - 20 mA	4 mA
NAMUR - 20 mA	3 mA

- **21 mA:** see following table:

selectable	analog current
0 - 20 mA	21.0 mA
2 - 20 mA	21.0 mA 1)
4 - 20 mA	21.0 mA 1)
NAMUR - 20 mA	21.5 mA

1) If measuring range 2 is set to the maximum possible value, the limiting value of range 2 ... 20 mA is at 20.9 mA and of range 4 ... 20 mA at 20.8 mA.

```
Analog output
during fault
Meas. value: hold
```

51011c

- **Output during faults (analog output during a fault)**

  It is possible for you to define the type of measured value output during a fault. The following are possible:

  - **Hold:** The last value measured prior to the fault is output for the duration of the fault.
  - **Actual:** The measured value is continuously updated during the fault.
  - **Zero:** see following table:

selectable	analog current
0 - 20 mA	0 mA
2 - 20 mA	2 mA
4 - 20 mA	4 mA
NAMUR - 20 mA	3 mA

  - **21 mA:** see following table:

selectable	analog current
0 - 20 mA	21.0 mA
2 - 20 mA	21.0 mA [1)]
4 - 20 mA	21.0 mA [1)]
NAMUR - 20 mA	21.5 mA

1) If measuring range 2 is set to the maximum possible value, the limiting value of range 2 ... 20 mA is at 20.9 mA and of range 4 ... 20 mA at 20.8 mA.

5.10.1.2 Configuration: Inputs/Outputs/Pump: Assign Relays

```
Relays for limits
Relays for MR
Relays for status
Relays for valves
```

51012

You can use this menu to assign different functions to up to eight relays which are installed in the analyzer. These functions can be signals for limits or ranges, status signals, and the functions of the external solenoid valves. If an option module is present, eight additional relays, i. e. a total of 16 relays, can be assigned to the corresponding functions.

Each function may only be assigned to one single relay. The analyzer outputs an error message if you attempt a double assignment for a relay which has already been assigned. A relay to which a function has not been assigned is shown on the display by a dash.

Table 5-5 Summary of relay assignments

Function	Relay de-energized	Relay energized	Signalling
Limit	Limit has been triggered		Limit, see Section 5.9.2
Measuring range	Range 2	Range 1	
Fault	Fault present		
Maintenance request	Maintenance request		
CAL/MEAS	Measure	AUTOCAL	AUTOCAL
Function control	Function control present		With warm-up mode (approx. 30 min), AUTOCAL, uncoded
Zero gas	Zero gas flowing		Ext. solenoid valve open
Calibration gas (Sample gas inlet)		Calibration gas flowing	Ext. solenoid valve open
Sync.		Synchronization signal is output	AUTOCAL only "Zero gas flow" and adjustment not during sample gas purge phase

The pin assignments of the relays in the de-energized state are described in Chapter 3.

```
Relays/limits SO2
Limit 1: Relay 1
Limit 2: Relay 2
```

51012a

- **Relays for limits**

  The upper and lower limits can be defined as events for triggering relays. Select the desired relay number in the second and third lines.

  This function is specific to the component.

```
NO    MR relay 3
CO    MR relay -
SO2   MR relay 4
O2    MR relay -
```

51012b

- **Relays for MR**

  A relay can be assigned to the range switchover of each component. This guarantees reliable assignment of the analog signal to the currently active range, especially in autorange mode (see Section 5.9.1).

```
Fault            :R-
Mainten. req.    :R5
CAL/MEAS         :R6
Service sw.      :R-
```

51012c

- **Relays for status**

  You can use this dialog to apply the signalling of various operating states of the device as an event for relay control (R= Relay). The following signals are possible (see also Table 5-5):

  - **Fault:** The occurrence of a fault message
  - **Maintenance request:** The occurrence of maintenance request (applied to relay 5 in Fig.)
  - **CAL/MEAS:** Switching over from measurement to AUTOCAL (applied to relay 6 in Fig.)
  - **Service switch:** The occurrence of a function control.

```
External valves
Zero gas  :Relay -
Span gas  :Relay 7
Sync      :Relay 8
```

51012d

- **External valves**

  You can use this to trigger external solenoid valves via relay contacts:

  - **Zero gas:** The zero gas supply which is also triggered with AUTOCAL
  - **Span gas:** The calibration gas supply (assigned to relay 7 in Fig.; see Section 5.10.3.2)
  - **Sync:** The synchronization of an AUTOCAL with other devices within a system (assigned to relay 8 in Fig.; see Section 4.3.3).

5.10.1.3 Configuration: Inputs/Outputs/Pump: Binary/Sync Inputs

```
Sync inputs
Binary inputs
```

51013

You can use this dialog to set the response of the synchronization input and the binary intputs. Select an option.

```
Modes of sync input
(press -> to toggle)
_:activate CAL relay
```

51013a

- **Sync Input**
  You can use this dialog to set the response of the synchronization input. An AUTOCAL can then be triggered simultaneously for several analyzers within a system. The following settings are possible in the third line (see also section 4.3.3)**:**
  - **AUTOCAL:** The analyzer carries out an AUTOCAL and activates its sync output up to the end of the electronic adjustment.
  - **only CAL contact** (set in Fig.)**:** The analyzer enters the CAL status, but does not carry out an AUTOCAL. The analyzer waits until the Sync input becomes inactive. It then enters the status 'Purge sample gas' and subsequently returns to measuring mode again.

```
Fault/MaintenanceReq
function control
meaasuring ranges
Clear logbook
```

51015b

- **Binary Inputs:**
  You can use this dialog to freely configure 8 floating binary inputs ["0" = 0 V (0...4,5 V); "1" = 24 V (13...33 V)] in analyzers with an option module. The pin assignments of the 37-contact plug are described in Chapter 3. No inputs are preset on delivery.

  Using a submenu for the 8 inputs, you can
  - switch over 7 different messages for faults/maintenance requests or
  - switch over 4 different messages for function check or
  - switch over measuring ranges or
  - delete the logbook.

  The following table explains the functions:

Table 5-6 Summary of binary inputs

Function	Control with		Effect
	0 V	24 V	
- (vacant)			
External fault 1-7		x	e.g. signalling of a fault in gas conditioning (cooler, flow, condensation trap, ...)
External maintenance request		x	e.g. signalling of a maintenance request in gas conditioning (filter, flow, ...)
Function check		x	e.g. signalling of maintenance
Measuring range 1, 2		x	The corresponding range is selected (autorange OFF)
Autorange		x	Autorange is switched on
Delete logbook		x	Delete all fault and maintenance request entries

5.10.1.4 Configuration: Inputs/Outputs/Pump: Pump at CAL/MEAS

```
Pump at CAL:  ON
Pump at MEAS: ON
```

51014

You can use this dialog to define the response of the pump. The following parameters and values are possible:

- **Pump at CAL:** Pump **ON** or **OFF** during a calibration procedure (AUTOCAL)
- **Pump at MEAS:** Pump **ON** or **OFF** during measuring mode.

5.10.2 Configuration: Special Functions

```
Codes/Language
AUTOCAL drift
ELAN/PROFIBUS
Fact.data/Res/Units
```

5102

You can use this menu to call dialogs in order to modify the access code, to set the AUTOCAL drift, to parameterize the interfaces and to change the physical units in which the measured values are output.

5.10.2.1 Configuration: Special Functions: Codes/Language

```
Code 1: 111
Code 2: 222
Language: English
```

51021

In the first two lines of this dialog, you can change the codes of the two code levels 1 and 2 (see also Section 5.5.1). The factory settings are:

- **Code 1:** 111;
- **Code 2:** 222.

You can also reduce the number of code levels by assigning the same code to both levels. The new values are saved when you subsequently switch off the ULTRAMAT 23; you should therefore make a note of the changed code numbers and keep this at a safe place.

You should note the code numbers before you leave the menu.

In third line of this dialog you can change the language of the display dialogs:

- deutsch
- English
- español
- français
- italiano
- polski

A change is immediately effective when you leave the dialog.

5.10.2.2 Configuration: Special Functions: AUTOCAL Drift

```
Preset AUTOCAL drift
Quantity: 004
Limit: 6 %
```

51022

You can use this dialog to define the conditions under which the drift of an AUTOCAL procedure triggers a maintenance request. The adjustable parameters are:

- **Quantity:** The number of AUTOCAL procedures up to setting of a new reference value (4 in this case)
- **Limit:** The highest value in % of the set measuring range (max. 99%) by which the calibration may deviate from the reference value (6 % in this case. See also Section 5.7.1.3). If Autorange is set, measuring range 1 is assumed.

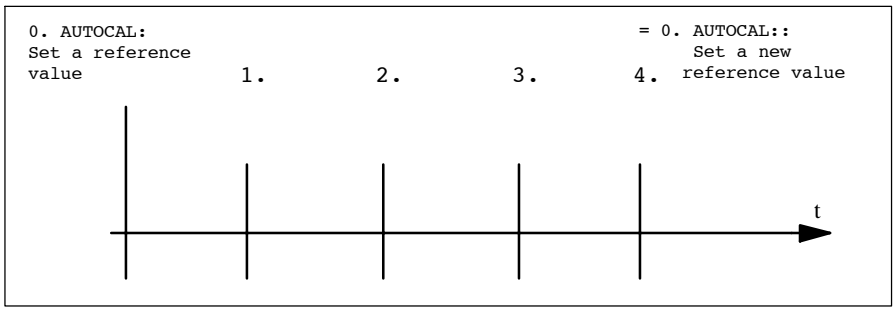

Fig. 5-11 Number of AUTOCAL procedures until a reference is set again (set number: 4)

The deviation is still displayed with the 4th AUTOCAL; at the same time the value of the 4th AUTOCAL is used as the new reference value. If an error message 'AUTOCAL deviation too large' is acknowledged, the values are reset during the next AUTOCAL, and counting commences at 1 again.

5.10.2.3 Configuration: Special Functions: ELAN/PROFIBUS

```
ELAN Parameters
ELAN ext.Interfer.
PROFIBUS Parameters
```

51023

```
Channel           : 1
Name: ULTRAMAT 23
Protocol         :OFF
Sync. zero cal.  :OFF
```

51023a

You can use this dialog to set the parameters for an ELAN or PROFIBUS network (see Chapter 3).

- **ELAN Parameters**
  You can use this dialog to set the parameters for an ELAN network (see Chapter 3).
  - **Channel**
    Here you can set the channel address for this analyzer. Addresses from 1 to 12 can be set. Each address may only be used once in an ELAN network.
  - **Name**
    You can set an analyzer name here. During communication with ELAN, it can be used for the plain text identification of the analyzers.
  - **Protocol (ON/OFF)**
    The cyclic, automatic transmission of measured values every 500 ms can be switched on/off.
  - **Sync. zero cal. (ON/OFF)**
    This function is not yet available. It must be set to OFF.

☞ **Notice**

For further details on the ELAN, please refer to the ELAN interface description (C79000-B5274-C176 German/English)

- **ELAN ext. Interfer.**

  Parameterization with two analyzers is used as an example.

  Analyzer 1 delivers measured values, analyzer 2 uses these values for a correction calculation.

1. Connect two analyzers to the ELAN interface using a cable (see ELAN interface description (C79000-B5274-C176 Chapter 2)).
2. Access the ELAN menu, and select components.

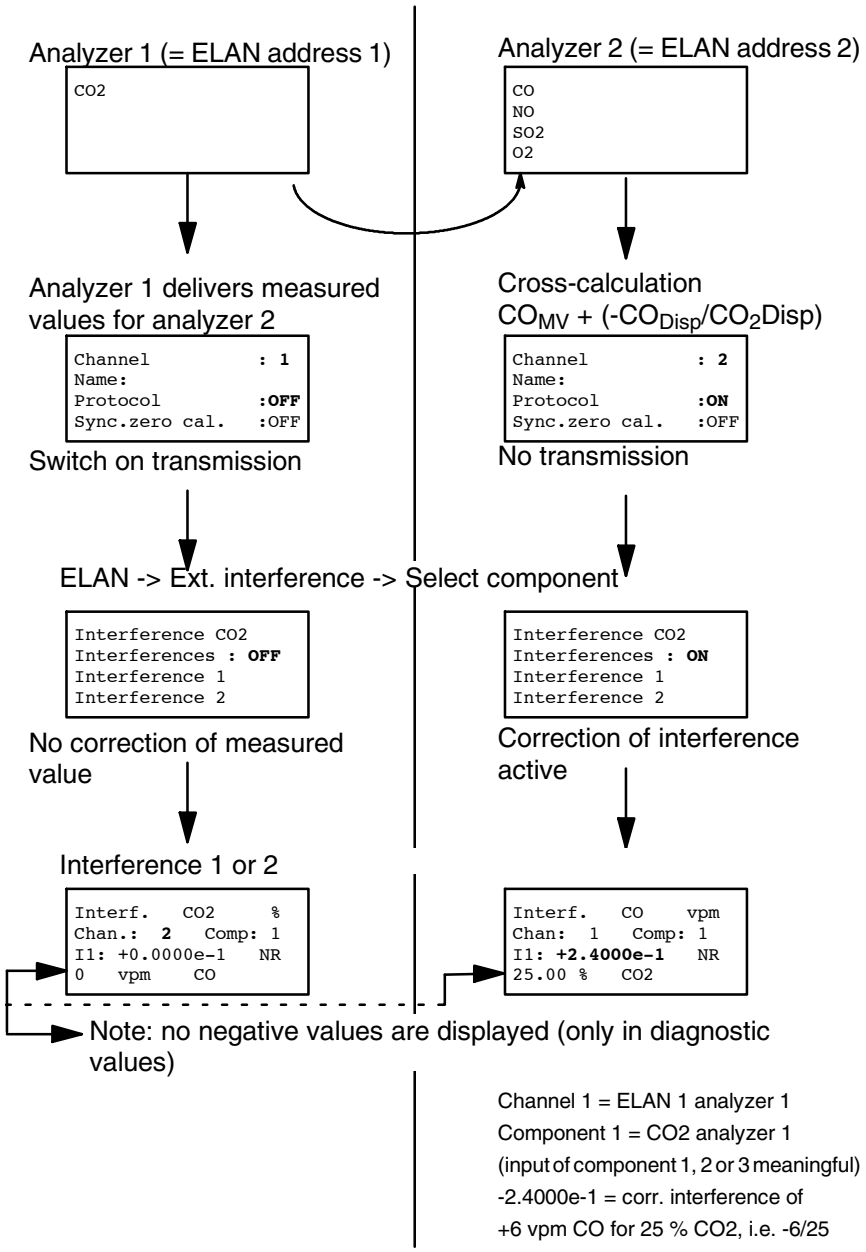

5. Neither analyzer is capable of measurements during the AUTOCAL process -> Evaluate function check (see Section 5.10.1.2)!

Fig. 5-1 ELAN external interferences

```
PROFIBUS
Number   :  XXX
```

51023b

- **PROFIBUS parameters**

  If the analyzer has a PROFIBUS-PA/DP option module, you can set the station address here as a decimal number.

Notice

For further details on PROFIBUS, please refer to the PROFIBUS-PA/DP interface description (A5E00054148).

5.10.2.4 Configuration: Special Functions: Fact. data/Res/Units

```
Load factory data
Reset analyzer
Change units
```

51024

You can use this menu to select a number of items with which e.g. faulty configurations and analyzer settings can be cancelled:

- **Load factory data**

  You can use this to reestablish the original parameters present when the analyzer was delivered. All modifications made since then are deleted.

```
Warning! Analyzer is
set to warm-up mode
Press ENTER to cont.
Press ESC to cancel
```

51024a

- **Reset analyzer**

  You can use this function to restart the analyzer. You will be warned (see Fig.) that the analyzer runs through a warm-up mode following the restart and is thus unavailable for measurements for a certain time. The **ENTER** key starts the warm-up mode. A restart can be cancelled here if necessary using the **ESC** key.

```
Unit for SO2
Set: mg/m3
MR min:  400 -3%
MR max: 2000 +3%
```

51024c

- **Change units**

  The second line of this dialog permits you to change the factory-set units of the measured components.

```
Unit for SO2
Set: vpm
MR min:  321 -3%
MR max: 1603 +3%
```

After changing the unit, the display of the parameters **MR min** and **MR max** is adapted accordingly.

This dialog is specific to the components.

Notice

The full-scale values may assume unusual values as a result of the component-specific conversion factors. Adaptations can be carried out as described in Section 5.9.1.2. Please also check the setpoints of the calibration gases (Section 5.8.1) and the settings for the limits (Section 5.9.2).

5.10.3 Configuration: Tests

```
Test:Displ/Keys/Flow
Inputs/Outputs
Chopper/IR source
RAM monitor
```

5103

You can use this test to check the selected components of the analyzer. These include the front panel keys, the LCD, inputs and outputs and a number of internal analyzer components.

5.10.3.1 Configuration: Tests: Display/Keys/Flow

```
Test of display
Test of keys
Test of flow switch
```

51031

You can select the following three tests in this menu:

- **Test of display**

  All characters in the character set of this analyzer are output in succession at every position of the display. The display remains empty if characters are output which cannot be displayed. This is a cyclic test, i.e. once the complete character set has been processed, the test is repeated until terminated by pressing the **ESC** key (a message on the display will remind you of this before the test is started).

- **Test of keys**

  This test takes 30 s, and the time remaining up to the end of the test is output on the display. You can press all input keys in succession during this test; the analyzer recognizes that a key has been pressed and indicates this. This test cannot be cancelled before the 30 s have expired.

- **Test of flow switch**

  This indicates whether the flow is correct or not. The flow can be switched on and off by pressing the **PUMP** key.

5.10.3.2 Configuration: Tests: Inputs/Outputs

```
Test analog outputs
Test of relays
Test ext. sol. valve
Test of inputs
```

51032

The electric inputs and outputs of the analyzer are tested here. You require the following equipment to carry out these tests:

- Ammeter,
- Ohmmeter,
- Power supply and/or
- Test plugs.

You can carry out the following tests:

```
Analog 1: 0.20 mA
Analog 2: 0.40 mA
Analog 3: 1.55 mA
Analog 4: 2.60 mA
```

51032a

- **Test analog outputs**

  You can use this dialog to set any value of the output current between 0 and 20 mA. There are four analog outputs (0/4 to 20 mA). To test these outputs, connect an ammeter to the corresponding analog outputs on plug X80 and measure the output current.

  Please refer to Chapter 3 for the pin assignments of plug X80.

```
Test of relays
Relay number 1
Condition: inactive
Press ESC to cancel
```

51032b

- **Test of relays**

  You can use this dialog to select a relay for testing. There are eight relays whose contacts you can test. Connect a ohmmeter to the corresponding relay outputs on plug X80. You can process the following parameters:

  - **Relay number:** One of the relays 1 to 8 (for analyzers with option module: relays 1 to 16) or "-" (no relay)
  - **Condition:** The current state of the selected relay (**active** or **inactive**; inactive in the Fig.).

  Please refer to Chapter 3 for the pin assignments of plug X80/X50.

```
 130 mg/m3 NO    ZV
  89 mg/m3 CO    OFF
 249 mg/m3 SO2   SV
20.77 %    O2    OFF
```

51032c

- **External solenoid valve**

  You can use this dialog to trigger external solenoid valves for the zero and calibration gas supplies via the relay contacts. Use the arrows keys ↑ and ↓ to select either the zero gas valve (**ZV**) in the first line and the calibration (span) gas valve (**SV**) in the third line. Call the selected valve using the **ENTER** key. Switch the previously assigned relay using any arrow key in the second or fourth line (the value on the right toggles between **OFF** and **ON**). The measured values output on the display during this test usually change following the switching operation.

```
Test of inputs
Press ESC to cancel
Active input:
None
```

51032d

- **Test of inputs (binary test)**

  After calling this dialog, apply a voltage of 24 V to one of the three inputs "Pump ON/OFF", "CAL" or "SYNC". The result is displayed in the fourth line (no input in this case).

  The external binary inputs of analyzers with option module can be tested in the menu "Binary inputs" (see Section 5.10.1.3).

5.10.3.3 Configuration: Tests: Chopper/IR Source

You can use this function to switch the chopper and IR source off.

Warning

Important! Essential!
The analyzer is not ready for measurements if the IR source or chopper has been switched off! Depending on the switch-off period, you must therefore provide a sufficiently long warm-up mode (e.g. by restarting the analyzer).

Notice

This function must only be carried out by qualified servicing engineers.

5.10.3.4 Configuration: Tests: RAM Monitor

Servicing engineers can use this function to view the contents of certain memory areas.

5.10.4 Configuration: Factory Configuration

```
Factory config. !
Please enter special
code: 0000
```

5104

These are factory settings made especially for your analyzer. Since modifications to these parameters may influence the functions of your analyzer, access to these factory settings is only possible by servicing engineers using a special access code.

5.11 Other Inputs

5.11.1 PUMP Key

This key switches the internal, sample gas pump (if present) on and off. If the pump is switched off whilst the analyzer is in input mode, it is also switched on again by pressing the **MEAS** key if parameterized accordingly (see Section 5.10.1.4).

The pump can also be switched on and off via the binary input (see Chapter 3). The binary input has priority over the button.

5.11.2 CAL Key

If the analyzer is in measuring mode, pressing the **CAL** key triggers a single, automatic calibration with ambient air or nitrogen (AUTOCAL). The **CAL** key cannot be used during the warm-up mode.

In addition to the CAL key, an AUTOCAL can also be triggered via the binary input. The binary input has priority ober the key.

Maintenance 6

6.1	Messages	6-2
6.1.1	Maintenance Requests	6-2
6.1.2	Fault Messages	6-3
6.2	Maintenance Work	6-6
6.2.1	Replacement of O_2 Sensor	6-7
6.2.2	Replacement of Fuse	6-7
6.2.3	Replacement of Safety Filter	6-8
6.2.4	Emptying the Condensation Trap	6-8
6.2.5	Replacement of Coarse Filter	6-8
6.3	Maintenance of Gas Path	6-9
6.4	Cleaning the Analyzer	6-9

6.1 Messages

The ULTRAMAT 23 can detect and display various fault statuses. The fault statuses are divided into maintenance requests and fault messages.

6.1.1 Maintenance Requests

Maintenance requests are references to certain changes in the analyzer which - at the time they are made - have no influence on the analyzer measurements. However, remedial measures are recommended to guarantee that measurements remain possible.

If the analyzer is in measuring mode, the occurrence of a maintenance request is indicated by an "**M**" at the right edge of the display.

```
AUTOCAL-drift beyond
tolerance
press ENTER to clear
next message with ->
```

Maintenance requests are logged and can be called in input mode using the menu path "Analyzer status - Status - Maintenance requests" (see Section 5.7.1.2). The corresponding message texts are stored. You can delete the messages by pressing the **ENTER** key. However, they appear again if the cause has not been eliminated.

The analyzer outputs a maintenance request in the following three cases:

AUTOCAL drift beyond tolerance

Message "AUTOCAL drift beyond tolerance"
The zero drift of a component is too large during the AUTOCAL procedure. The calibration parameters can be entered as described in Section 5.8.4. The actual deviation from the maximum permissible value can be read using the AUTOCAL deviation (see Section 5.10.2.2). It may be meaningful to set a shorter interval between two AUTOCAL procedures, otherwise contact the servicing department.

O_2 Sensor

Message "O_2 sensor"
The measuring voltage of the O_2 sensor has dropped as a result of aging, but is still within the permissible range. This means that it is not necessary to replace the O_2 sensor immediately, but this will soon be used up. Order a new O_2 sensor if necessary.

LCD temperature beyond tolerance

Message "LCD temperature beyond tolerance"
The contrast control is no longer guaranteed if the LCD temperature is outside the permissible tolerance. It may then be difficult to read the display.

The ambient temperature is too high, provide sufficient ventilation or air conditioning. If the fault still occurs, contact the servicing department.

External maintenance request

Signaling via binary inputs (only with option module).

6.1.2 Fault Messages

Fault messages are references to certain changes in the analyzer which influence its ability to measure correctly.

If the analyzer is in measuring mode, the occurrence of a fault is indicated by an "**F**" at the right edge of the display.

```
Mains voltage beyond
tolerance
press ENTER to clear
next message with ->
```

Fault messages are logged and can be called in input mode using the menu path "Analyzer status - Status - Logbook/faults" (see Section 5.7.1.1). The corresponding message texts are stored as alphanumeric text in the logbook. You can delete the messages by pressing the **ENTER** key. However, they appear again if the cause has not been eliminated.

Table 6-1 provides a summary of fault messages, their causes, and measures to eliminate the faults. If a remedy is not listed, you must contact the servicing department when this fault message occurs.

Table 6-1 Fault messages

Fault message	Possible causes	Remedy
Meas. value channel 1 beyond tolerance Meas.value display: *****	Analyzer section of first component is faulty	
Meas. value channel 2 beyond tolerance Meas.value display: *****	Analyzer section of second component is faulty	
Meas. value channel 3 beyond tolerance Meas.value display: *****	Analyzer section of third component is faulty	
Meas. value O_2 beyond tolerance Meas. value display: *****	O_2 sensor faulty or old	Replace the O_2 sensor as described in Section 6.2.1.
	Motherboard faulty	
Mains voltage beyond tolerance	Mains voltage varies	Correct such that the mains voltage is within the tolerance values permissible for the analyzer.
	Power supply unit faulty	
Temp. of analyzer beyond tolerance	Ambient temperature too high or too low	Provide sufficient ventilation or air conditioning.
	Temperature sensor of a detector faulty	
Pressure of amb. air beyond tolerance	Pressure sensor faulty	

Table 6-1 Fault messages

Fault message	Possible causes	Remedy
Flow too low during measuring	Sample gas path blocked or leaky	Clean or replace the blocked parts (hose, filter etc.). If the problem is still present:
	Pump not running	Switch the pump on.
	Pump capacity too low	Increase the pump capacity as described in Section 5.9.4.1.
	Pump faulty	
No data for temperature compensation	Temperature compensation not completed successfully	
	New components have been loaded	
	EEPROM has been initialized	
Flow too low during AUTOCAL	CAL gas path blocked or leaky	Clean or replace the blocked parts (hose, filter etc.). If the problem is still present:
	Pump not running	Switch the pump on.
	Pump capacity too low	Increase the pump capacity as described in Section 5.9.4.1.
	Pump faulty	
Conc. of O_2 too low during AUTOCAL Meas. value display: *****	O_2 sensor faulty or old	Replace the O_2 sensor as described in Section 6.2.1.
	O_2 sensor zero not calibrated	Calibrate the zero of the O_2 sensor as described in Section 5.8.2.2.
Fault at analog output	Component could not be initialized when switching on	
	Limits were violated when calibrating the analog section	
General fault of all IR channels MV-C1/2/3 beyond tolerance	Chopper faulty	
	IR source faulty	
Fault of addresses for IR channels	Plug-in jumper on detector for detection of components not OK	
	The cable of the detector has no contact	Check that the plug is correctly connected to the detector (the plug must latch in twice).
	Cable of detector faulty	

Table 6-1 Fault messages

Fault message	Possible causes	Remedy
AUTOCAL drift beyond tolerance	Sample cell contaminated	
	Detector faulty	
	IR source power too low	
Fault at EEPROM	Checksum not OK	
	Read character ≠ written character	
IR channel 1 not calibrated	Calibration of full-scale value/sag missing	
IR channel 2 not calibrated	Calibration of full-scale value/sag missing	
IR channel 3 not calibrated	Calibration of full-scale value/sag missing	
Voltage for IR source beyond tolerance	IR source not OK	
	Motherboard faulty	
Supply of bridge beyond tolerance	Channel amplifier faulty	
	Motherboard faulty	
Half-bridge voltage beyond tolerance	Channel amplifier faulty	
	Motherboard faulty	
Lock-in fault	Channel amplifier faulty	
	Motherboard faulty	
Sensitivity of O_2 sensor too low	O_2 sensor faulty or old	Replace the O_2 sensor as described in Section 6.2.1 .
Overflow of AD converter	Electronics faulty	
External fault	Signaling of an external fault	

6.2 Maintenance Work

Warning

Certain parts in this electrical device contain dangerous voltage during operation.

Severe personal injury and/or damage to property may occur if the power supply is connected incorrectly, if maintenance work is carried out incorrectly, or if the warnings are not observed.

Correct and safe operation of this device is dependent on proper transport, storage and installation as well as careful operation and maintenance.

Warning

When working with toxic gases, ensure that no concentrations dan• gerous to health can occur at the position of work. If the gas connec• tions are made incorrectly, accidents may occur as a result of toxic, flammable or explosive gases.

Caution

The electronic components and modules fitted in this device must be protected against electrostatic charges and discharging. Comprehen• sive measures must therefore be made to protect them wherever they are manufactured, tested, transported and installed.

Warning

Before opening the analyzer, disconnect all poles from the mains supply.

6.2.1 Replacement of O_2 Sensor

Warning

Danger of burns

The O_2 sensor contains acetic acid which can burn unprotected skin. The sensor housing must not be damaged when the sensor is replaced.

If you nevertheless come into contact with the acid, immediately rinse affected skin with plenteous amounts of water.

Please also note that old or faulty O_2 sensors are toxic waste and must be packed and disposed of accordingly!

Removal

- Unscrew the two screws of the front cover and remove the cover.
- Unlock the plug of the sensor connection, and remove.
- Unscrew the O_2 sensor.
- Remove the gasket of the O_2 sensor.

Installation

- Insert the new gasket.
- Screw in the new O_2 sensor and tighten hand-tight.
- Reconnect the plug.
- Enter the date of installation in the menu item "O_2 cal. after install" as described in Section 5.8.2.1.
- Calibrate the O_2 zero as described in Section 5.8.2.2.

6.2.2 Replacement of Fuse

- Remove the fuse holder underneath the appliance plug (see Section 3, Technical Description). Use a small screwdriver to do this.
- Remove the blown fuse from the holder.
- Insert a new fuse.

☞ **Note**

Only fuses of the type printed on the rear of the analyzer may be used.

- Insert the fuse holder into the compartment again.

6.2.3 Replacement of Safety Filter

Preparation

- Unscrew the four screws of the top housing cover, and remove the cover to the rear.
- Find the contaminated filter according to its type (see Section 7, spare parts list, page 7-18, pos. 14 and 15).
- Remove the hoses from the filter.
- Replace the contaminated filter.

☞ **Note**

When installing the filter, make sure that the arrow on the filter points in the gas flow direction.

- Push the cover back onto the housing and screw tight.

6.2.4 Emptying the Condensation Trap (Benchtop Unit Only)

- Switch of the pump by pressing the **PUMP** key.
- Loosen the condensation trap on the front of the analyzer by tilting it slightly, and pull downwards carefully.
- Empty the trap and dispose of the condensation according to the composition of the sample gas.
- Push the condensation trap on again from below.

6.2.5 Replacement of Coarse Filter (Benchtop Unit Only)

- Switch of the pump by pressing the **PUMP** key.
- Loosen the condensation trap on the front of the analyzer as described in Section 6.2.4.
- Remove the contaminated filter.
- Insert the new filter.
- Push the condensation trap on again from below.

6.3 Maintenance of Gas Path

Depending on the corrosivity of the sample gas, check the state of the gas path at regular intervals.

Servicing may be necessary.

6.4 Cleaning the Analyzer

Wipe the outer surfaces of the analyzer using a soft cloth dampened with a solution of mild cleaning agent.

Spare Parts List

7

Wir haben den Inhalt der Druckschrift auf die Übereinstimmung mit der beschriebenen Hard- und Software geprüft. Dennoch können Abweichungen nicht ausgeschlossen werden, so daß wir für die vollständige Übereinstimmung keine Gewähr übernehmen. Die Angaben in dieser Druckschrift werden jedoch regelmäßig überprüft, und notwendige Korrekturen sind in den nachfolgenden Auflagen enthalten. Für Verbesserungsvorschläge sind wir dankbar.

We have checked the contents of this manual for agreement with the hardware and software described. Since deviations cannot be excluded entirely, we cannot guarantee full agreement. However, the data in this manual are reviewed regularly and any necessary corrections are included in subsequent editions. Suggestions for improvement are welcomed.

Nous avons vérifié la concordance du contenu de ce document avec les caractéristiques du matériel et du logiciel. Toutefois des divergences ne sont pas à exclure ce qui ne nous permet pas de garantir une conformité intégrale. Les informations contenues dans ce document sont régulièrement vérifiées, et les indispensables corrections apportées dans les éditions suivantes. Nous vous remercions pour toutes propositions visant à améliorer la qualité de ce document.

© Copyright Siemens AG - 2005 - All Rights reserved

Technische Änderungen vorbehalten

Technical data subject to change

Sous réserve de modifications techniques

Weitergabe sowie Vervielfältigung dieser Unterlage, Verwertung und Mitteilung ihres Inhalts nicht gestattet, soweit nicht ausdrücklich zugestanden. Zuwiderhandlungen verpflichten zu Schadenersatz. Alle Rechte vorbehalten, insbesondere für den Fall der Patenterteilung oder GM-Erteilung.

The reproduction, transmission or use of this document or its contents is not permitted without express written authority. Offenders will be liable for damages. All rights, including rights created by patent grant or registration of a utility model or design, are reserved.

Une diffusion ou une reproduction de ce document ainsi qu`une publication ou une exploitation de son contenu ne sont pas autorisés. Toute infraction conduit à des dommages et intérets. Tous droits réservés, en particulier pour le cas des brevets d`invention délivrés ou des modèles déposés.

Diese Ersatzteilliste entspricht dem technischen Stand Januar 2005.
This Parts List corresponds to the technical state of January 2005.
Cette liste de pièces de rechange correspond au niveau technique de Janvier 2005.

Am Typenschild ist das Baujahr des Gasanalysengerätes (verschlüsselt) aufgeführt.
The rating plate shows the year of construction (coded) of the gas analyzer.
La plaque signalétique de l`analyseur indique l`année de fabrication (codifiée) de l`appareil.

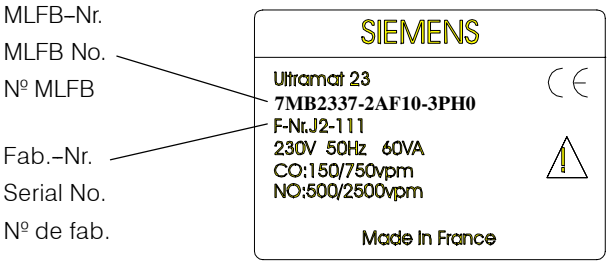

Hinweis für die Bestellung

Die Ersatzteilbestellung muß enthalten:
1. Menge
2. Bezeichnung
3. Bestell-Nr.
4. Gerätename, MLFB- und Fab.-Nr. des Gasanalysengerätes, zu dem das Ersatzteil gehört.

Bestelladresse: Siemens AG
CSC (Centre Service Client)
1, chemin de la Sandlach
F-67506 Haguenau/Frankreich
Tel.: +33 3 88 90 66 77
Fax: +33 3 88 90 66 88

Ordering instructions

All orders should specify the following:
1. Quantity
2. Designation
3. Order No.
4. Name of gas analyzer, MLFB No. and Serial No. of the instrument to which the spare part belongs.

Ordering address: Siemens AG
CSC (Centre Service Client)
1, chemin de la Sandlach
F-67506 Haguenau/France
Tel.: +33 3 88 90 66 77
Fax: +33 3 88 90 66 88.

Indications lors de la commande

La commande de pièces de rechange doit comporter:
1. Quantité
2. Désignation
3. Nº de réferénce
4. Nom, Nº MLFB et Nº de fabrication de l`analyseur de gaz pour lequel est destiné la pièce de rechange.

L'adresse de commande: Siemens AG
CSC (Centre Service Client)
1, chemin de la Sandlach
67506 Haguenau
Tel.: +33 3 88 90 66 77
Fax: +33 3 88 90 66 88.

Bestellbeispiel:

1 Sauerstoffsensor

C79451-A3458-B55

für ULTRAMAT 23

Typ 7MB2337-2AF10-3PH0

Fab.-Nr. J2-111

Example for ordering:

1 oxygen sensor

C79451-A3458-B55

for ULTRAMAT 23

type 7MB2337-2AF10-3PH1

Serial No. J2-111

Exemple de commande:

1 capteur d'oxygène

C79451-A3458-B55

pour ULTRAMAT 23

type 7MB2337-2AF10-3PH2

Nº de fab. J2-111

Vorsicht!

Für den Austausch von Teilen besonders am Analysierteil sind spezielle Arbeiten notwendig, die nur im CSC Haguenau oder von qualifiziertem, geschultem Personal durchgeführt werden können. Ein unsachgemäßer Eingriff kann zu einer Einschränkung der Messgenauigkeit oder zu einer Funktionsunfähigkeit des Gerätes führen.

Caution!

Special work is required to change parts on the analyzer section which can only be carried out by the CSC in Haguenau or by qualified and trained personnel. Improper handling may reduce the measuring accuracy or lead to a malfunction of the device.

Attention!

Le remplacement de pièces, en particulier au bloc d'analyse ne peut être effectué qu'au CSC de Haguenau ou par du personnel qualifié. Une intervention inappropriée peut réduire la précicion de mesure ou entraver le bon fonctionnement de l'appareil.

Hinweis zur Messgenauigkeit

Um die Messgenauigkeit des ULTRAMAT 23 zu erhalten, kann es nach dem Austausch von Teilen notwendig werden, eine Temperaturkompensation durchzuführen. Entsprechende Teile sind mit einem *) gekennzeichnet.

Dies ist besonders dann der Fall, wenn am Aufstellungsort kurzzeitige Temperaturschwankungen >5 °C auftreten. Durch einen zyklischen Nullpunktabgleich "AUTOCAL" von zum Beispiel 3 Stunden wird diese Temperaturabhängigkeit nicht in Erscheinung treten.

Wir empfehlen, eine Temperaturkompensation im CSC in Haguenau durchführen zu lassen.

Note of the measuring accuracy

To maintain the measuring accuracy of the ULTRAMAT 23 it may be necessary to perform temperature compensation after changing parts. The appropriate parts are marked by *).

This is particularly the case when brief temperature fluctuations >5 °C occur at the erection site. This temperature dependence will not occur for example after a cyclic zero point adjustment "AUTOCAL" of 3 hours.

We recommend having temperature compensation performed at CSC Haguenau.

Remarque concernant l'exactitude des mesures

Il peut s'avérer nécessaire après le remplacement des pièces de procéder à une compensation de la température afin de conserver l'exactitude des mesures de l'ULTRAMAT 23. Les pièces correspondantes sont mises en évidence par un astérisque *).

Ceci est particulièrement le cas si de courtes variations de température supérieures à 5 °C surgissent sur le lieu d'implantation. Cette dépendance de la température n'apparaît pas grâce à un réglage cyclique du point zéro "AUTOCAL" de 3 heures par exemple.

Nous recommandons de faire exécuter une compensation de température dans le CSC à Haguenau.

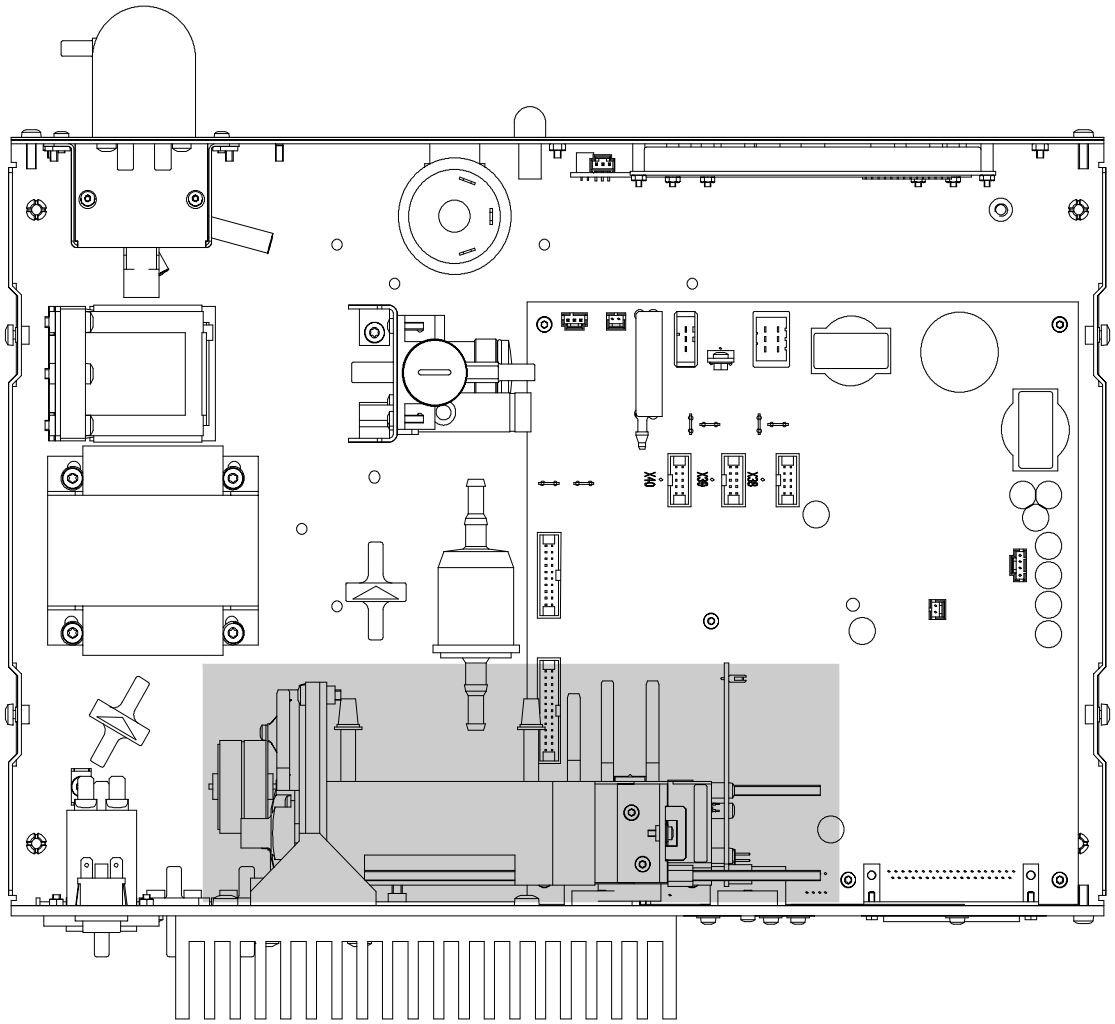

Grau: Analysierteil
Weiß: Elektronikteil

Gray: Analyzer section
White: Electronics section

Gris:. Partie analyse
Blanc: Partie électronique

GASWEG/HOSING SYSTEM FOR GAS/CIRCUIT DE GAZ

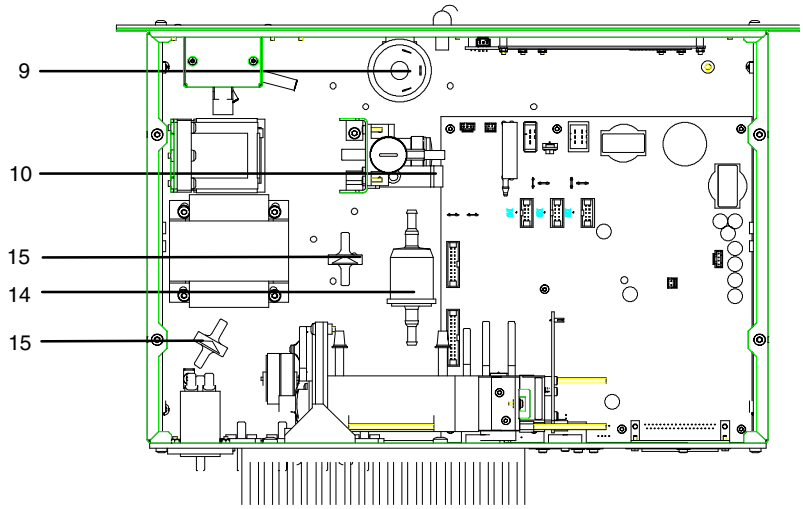

19-Zoll-Ausführung
19" rack version
Variante rack 19"

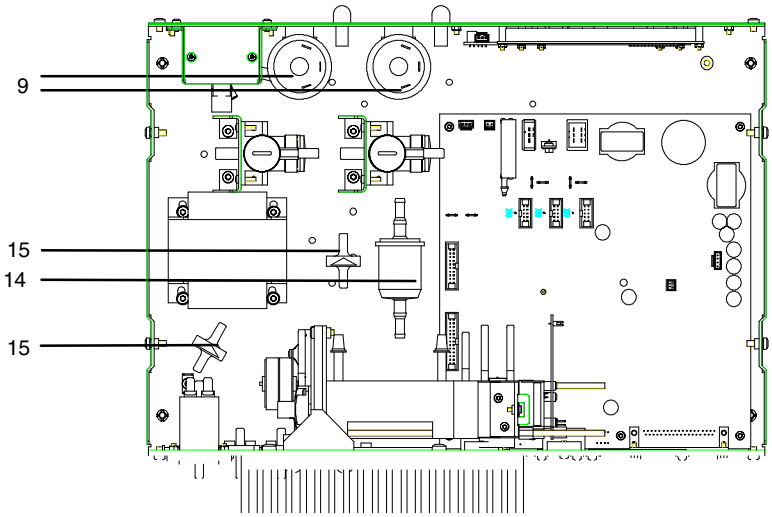

19-Zoll-Ausführung
mit getrennten Gaswegen
19" rack version
with separate gas paths
Variante rack 19" avec des
circuits de gaz séparés

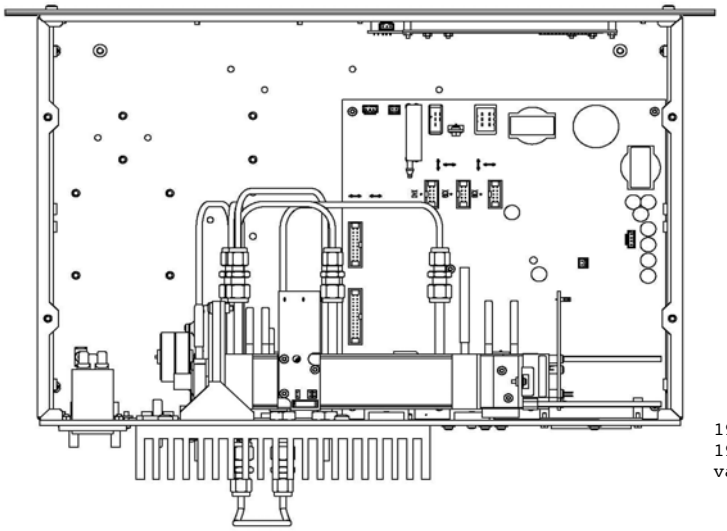

19-Zoll-Ausführung in Rohr
19" rack version, pipe
variante rack 19", tube

Bezeichnungen s. Seite 7-10 Designations see page 7-10 Désignations voir page 7-10

GASWEG/HOSING SYSTEM FOR GAS/CIRCUIT DE GAZ

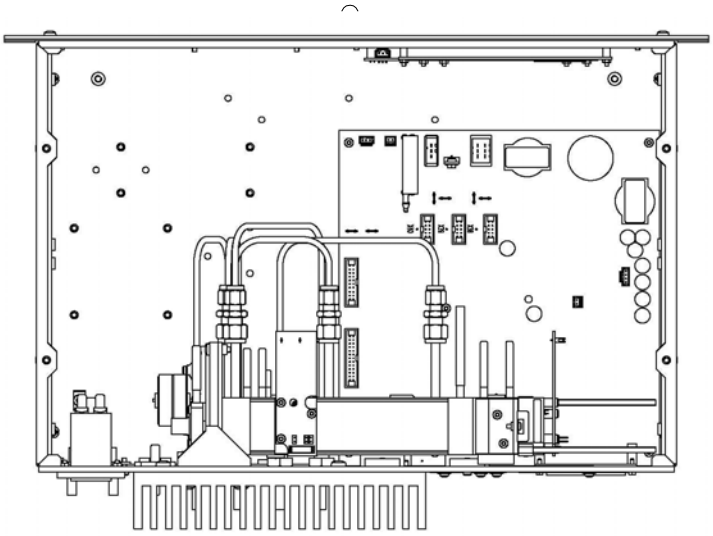

19-Zoll-Ausführung, Rohr mit getrennten Gaswegen
19" rack version, pipe with separate gas paths
Variante rack 19", tube avec des circuits de gaz séparés

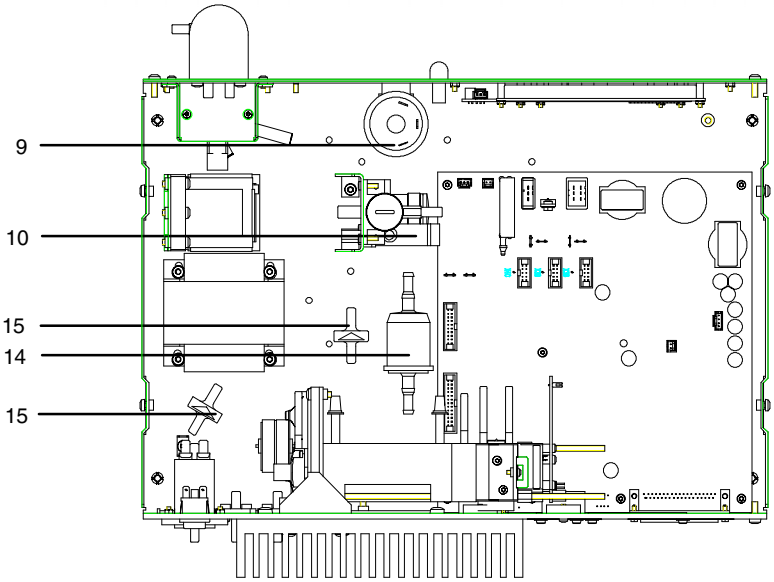

Tischausführung
Bench-top version
Variante portable

Teil-Nr. Part No. N° Pièce	Bezeichnung Designation Désignation	Bestell-Nr. Order No. N° de référence	Bemerkungen Remarks Remarques
9	Druckschalter Pressure switch Pressostat	C79302–Z1210–A2	
10	Magnetventil Solenoid valve Electrovanne	C79451–A3494–B33	
14	Sicherheitsfilter Meßgas Safety filter sample gas Filtre de sécurité pour gaz de mesure	C79127–Z400–A1	innenliegend inside à l'intérieur
15	Sicherheitsfilter Nullgas/ Chopperraumbespülung Safety filter zero gas/ chopper purge Filtre de sécurité pour gaz de zéro/ balayage de l'obturateur	A5E00059149	innenliegend inside à l'intérieur

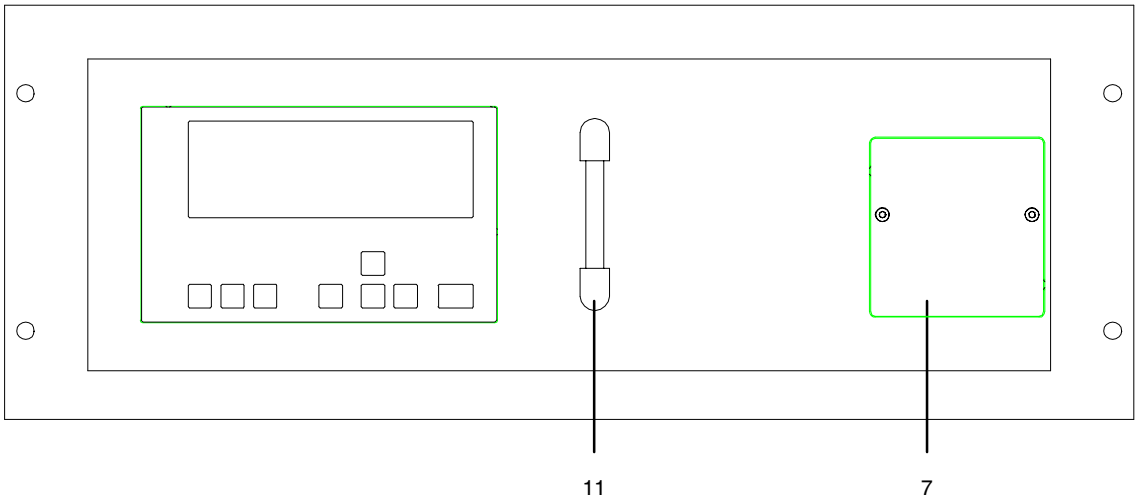

19-Zoll-Ausführung
19" rack version
Variante rack 19"

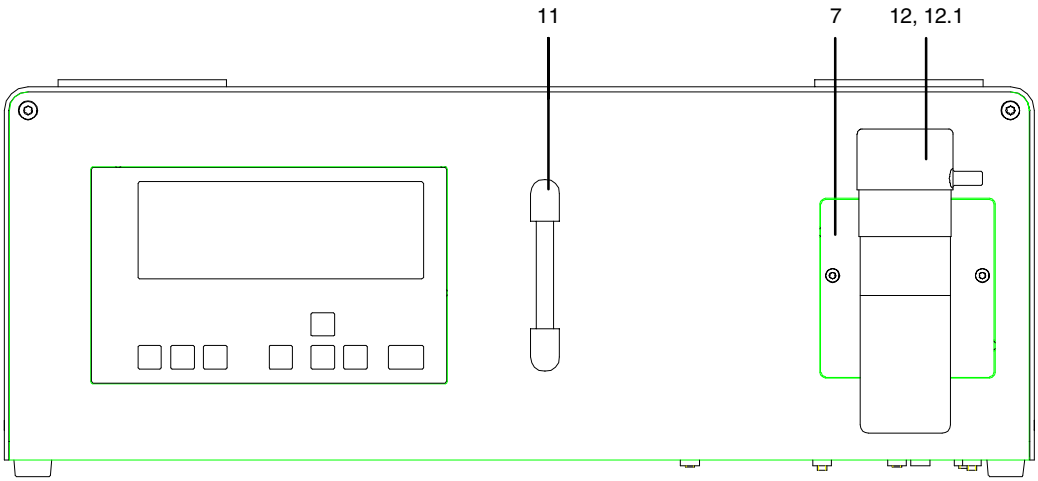

Tischausführung
Bench-top version
Variante portable

Bezeichnungen s. Seite 7-12 Designations see page 7-12 Désignations voir page 7-12

Teil-Nr. Part No. Pièce N°	Bezeichnung Designation Désignation	Bestell-Nr. Order No. N° de référence	Bemerkungen Remarks Remarques
7	Sauerstoffsensor Oxygen sensor Capteur d'oxygène	C79451–A3458–B55	
11	Strömungsmesser Flowmeter Débitmètre	C79402–Z560–T1	
12	Kondensatbehälter Condensation trap Pot de condensation	C79451–A3008–B43	Frontseite front face avant
12.1	Filter Filter Filtre	C74127–Z1211–A1	im Kondensatbehälter in the condensation trap dans le pot de condensation

ELEKTRONIK/ELECTRONICS/ELECTRONIQUE

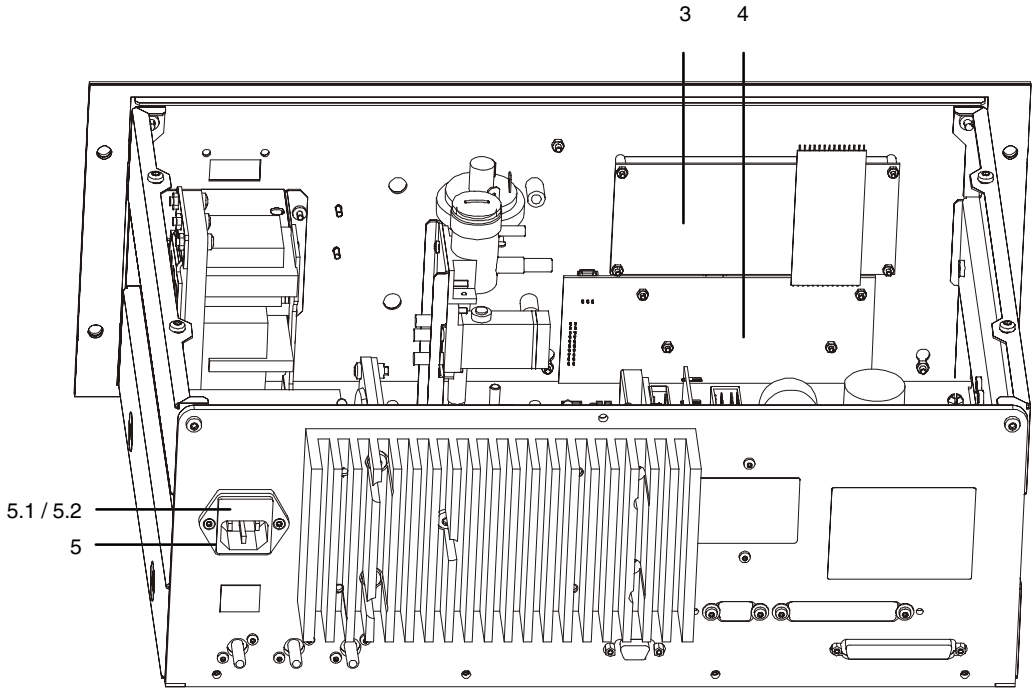

19-Zoll-Ausführung
19" rack version
Variante rack 19"

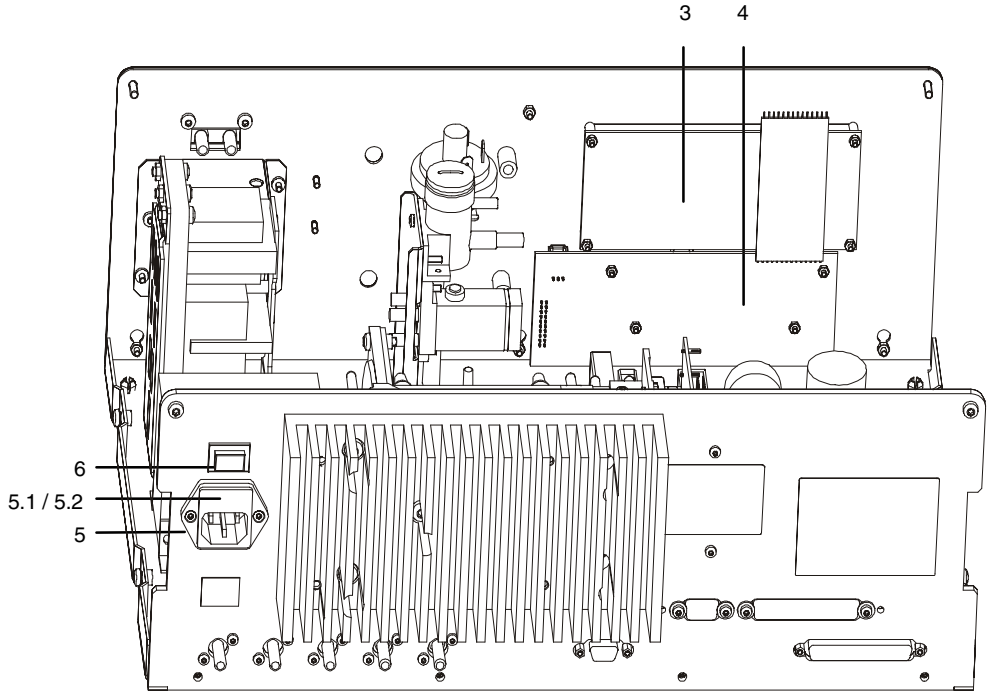

Tischausführung
Bench-top version
Variante portable

Bezeichnungen s. Seite 7-14 Designations see page 7-14 Désignations voir page 7-14

Teil-Nr. Part No. Nº Pièce	Bezeichnung Designation Désignation	Bestell-Nr. Order No. Nº de référence	Bemerkungen Remarks Remarques
3	LCD–Modul LCD module Module LCD	C79451–A3494–B16	
4	Tastenplatte Keyboard Panneau de touches	C79451–A3492–B605	
5	Steckerfilter Plug filter Connecteur secteur avec filtre	W75041–E5602–K2	
5.1	Schmelzeinsatz Fuse Fusible	W79054–L1010–T630	200 V/230 V; T 0,63/250 V s. Aufschrift Geräterückseite/see rear of device/voir au dos de l'appareil
5.2	Schmelzeinsatz Fuse Fusible	W79054–L1011–T125	100 V/120 V; T 1,25/250 V s. Aufschrift Geräterückseite/see rear of device/voir au dos de l'appareil
6	Netzschalter Power switch Interrupteur de mise sous tension	W75050–T1201–U101	

PUMPE/PUMP/POMPE

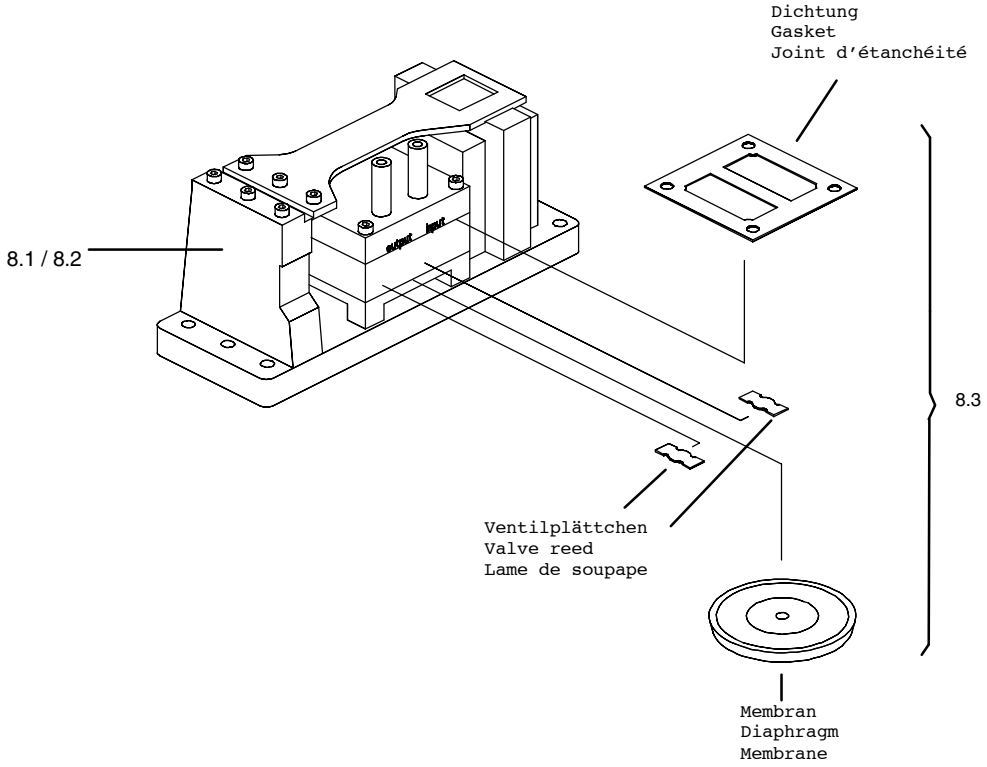

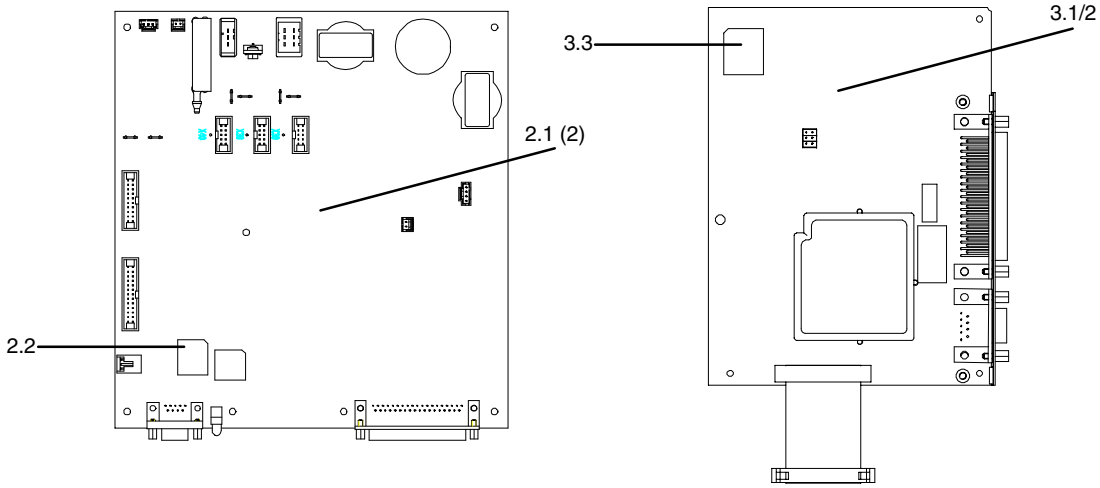

Bezeichnungen s. Seite 7-16 Designations see page 7-16 Désignations voir page 7-16

Teil-Nr. Part No. Nº Pièce	Bezeichnung Designation Désignation	Bestell-Nr. Order No. Nº de référence	Bemerkungen Remarks Remarques
8.1	Meßgaspumpe Sample gas pump Pompe de gaz de mesure	C79451–A3494–B10	50 Hz
8.2	Meßgaspumpe Sample gas pump Pompe de gaz de mesure	C79451–A3494–B11	60 Hz
8.3	Dichtungssatz Set of gaskets Jeu de joints d'étanchéité	C79402–Z666–E20	für Meßgaspumpe lfd. Nr. 8.1 und 8.2 for sample gas pump Nos. 8.1 and 8.2 pour pompe de gaz de mesure Nº 8.1 et 8.2

Teil-Nr. Part No. Nº Pièce	Bezeichnung Designation Désignation	Bestell-Nr. Order No. Nº de référence	Bemerkungen Remarks Remarques
2 *)	Grundplatte Motherboard Carte mère	C79451–A3494–D501	Grundplatte und Firmware; deutsch/englisch/französisch/spanisch/ italienisch Motherboard and firmware; German/English/French/Spanish/Italian Carte mère et firmware; allemand/anglais/français/espagnol/italien
2.1 *)	Grundplatte Motherboard Carte mère	C79451–A3492–B601	Grundplatte ohne Firmware Motherboard without firmware Carte mère sans firmware
2.2	Firmware (FlashPROM)	C79451–A3494–S501	deutsch/englisch/französisch/spanisch/ italienisch German/English/French/Spanish/Italian allemand/anglais/français/espagnol/italien
3.1	Optionsbaugruppe DP Additional electronics DP Eléctronique additionelle DP	A5E00057159	PROFIBUS DP
3.2	Optionsbaugruppe PA Additional electronics PA Eléctronique additionelle PA	A5E00056834	PROFIBUS PA
3.3	Firmware (PROFIBUS)	A5E00057164	deutsch/englisch/französisch/spanisch/ italienisch German/English/French/Spanish/Italian allemand/anglais/français/espagnol/italien

*) Nach dem Austausch werden spezielle Arbeiten notwendig, die nur von qualifiziertem, geschultem Fachpersonal durchgeführt werden können wie z. B. Temperaturkompensation, elektrischer Grundabgleich etc.

Following replacement, special work is required which can only be carried out by qualified and trained personnel, for example temperature compensation, basic electronic adjustment etc.

Des travaux particuliers comme p. ex. la compensation de température, le réglage de base électrique etc., ne pouvant être exécutés que par du personnel qualifié sont à effectuer après un remplacement de pièces.

Analysierteil/Analyzer section/Partie analytique - Übersicht/summary/sommaire

Gas	Measuring range (MR)		Order no. comp	Order no. MR	IR source C79451-A3468-	Chopper C79451-A3468	Plate w. threaded bolts and windows C79451-A3468-	Opt. Filter	Sample cell 1		Gas filter 1 C79451-	Detector 1		Sample cell 2		Gas filter 2 C79451-	opt. filter C79451-A3458-	Detector 2	
	min	max							length [mm]	C79451-A3468-		type	C79451-A3468-	length [mm]	C79452-A3468-			type	C79451-A3468
CO	50 vpm	250 vpm	A	D	B206	B515/516	B513/514	-	180	B231	A3458-B500	2 layer HC	B525						
CO	100 vpm	500 vpm	A	E															
CO	150 vpm	750 mg/m3	A	U															
CO	150 vpm	750 vpm	A	F															
CO	200 vpm	1000 vpm	A	G															
CO	500 vpm	2500 vpm	A	H															
CO	50 vpm	2500 vpm	A	X															
CO	1000 vpm	5000 vpm	A	J					90	B232									
CO	2000 vpm	10000 vpm	A	K					60	B233									
CO	0,5 %	2,5 %	A	L					20	B234									
CO	1 %	5 %	A	M					6	B235									
CO	2 %	10 %	A	N					2	B236									
CO	5 %	25 %	A	P					6	B235			B528						
CO	10 %	50 %	A	Q					2	B236									
CO	20 %	100 %	A	R															
CO2	50 vpm	250 vpm	C	D	B206	B515/516 purged	B513/514	-	180	B231	A3468-B541	2 layer HC	B536						
CO2	200 vpm	1000 vpm	C	G															
CO2	500 vpm	2500 vpm	C	H					90	B232									
CO2	1000 vpm	5000 vpm	C	J					20	B234									
CO2	2000 vpm	10000 vpm	C	K		B515/516			90	B232			B526						
CO2	0,5 %	2,5 %	C	L					60	B233									
CO2	1 %	5 %	C	M					20	B234									
CO2	2 %	10 %	C	N															
CO2	5 %	25 %	C	P					6	B235	-								
CO2	10 %	50 %	C	Q					2	B236									
CO2	20 %	100 %	C	R															
NO	200 vpm	1000 vpm	P	G	B206	B515/516	B513/514	C75285-Z1491-C5	180	B231	-	3 layer	B520 ch. 1 B522 ch. 2						
NO	250 mg/m3	1250 mg/m3	P	V															
NO	400 mg/m3	2000 mg/m3	P	W															
NO	500 vpm	2500 vpm	P	H															
NO	1000 vpm	5000 vpm	P	J					90	B232									
SO2	150 vpm	750 vpm	N	F	B206	B515/516	B513/514	C79285-Z1302-A4	180	B231	A3458-B508	3 layer	B521 ch. 1 B523 ch. 2						
SO2	400 mg/m3	2000 mg/m3	N	W															
SO2	200 vpm	1000 vpm	N	G															
SO2	500 vpm	2500 vpm	N	H															
SO2	1000 vpm	5000 vpm	N	J					60	B233									
SO2	2000 vpm	10000 vpm	N	K					20	B234									
SO2	0,5 %	2,5 %	N	L															
CH4	500 vpm	2500 vpm	D	H	B206	B515/516	B513/514	-	180	B231	A3468-B542	2 layer HC	B527						
CH4	0,5 %	2,5 %	D	L					20	B234									
CH4	2 %	10 %	D	N					6	B235									
CH4	5 %	25 %	D	P					2	B236									
CH4	20 %	100 %	D	R									B529						
R22	500 vpm	2500 vpm	U	H	B206	B515/516	B513/514	-	180	B231	-	2 layer HC	B535						
N2O	100 vpm	500 vpm	S	E	B206	B515/516	B513/514	-	90	B232	-	2 layer HC	B581						
C2H4	2000 vpm	10000 vpm	F	K	B206	B515/516	B513/514	C79285-Z1491-C2	180	B231	-	2 layer HC	B537						
C6H14	2000 vpm	10000 vpm	M	K	B206	B515/516	B513/514	A5E00069310	20	B234	A3468-B543	2 layer spec.	B538						
SF6	500 vpm	2500 vpm	V	H	B206	B515/516	B513/514	C79451-A3182-C161	90	B232	-	2 layer HC	B539						
CO2/CO	5 %/100 vpm	25 %/500 vpm		BJ	B206	B516	B514	-	6	B235	-	as top detector	B531	180	B231	A3458-B500	-	2 layer HC	B525
CO2/CO	10/0,5 %	50/2,5 %		BK					2	B236				20	B234				B528
CO2/CH4	5/1 %	25/5 %	-	CA	B206	B516	B514	-	6	B235	-	as top detector	B531	6	B235	-	-	2 layer HC	B527
CO2/CH4	5/2 %	25/10 %	-	CB										-	-				
CO/CO2	10/0,5 %	50/2,5 %	-	BB	B206	B516	B514	-	2	B236	-	as top detector	B532	20	B234	-	-	2 layer HC	B526
CO/CO2	10/10 %	50/50 %		BA										-	-				
CO/CO2	20/20 %	100/100 %		BD															
CO/NO	250/400 mg/m3	1250/2000 mg/m3	-	AK	B206	B516	B514	-	180	B231	A3458-B500	as top detector	B530	-	-	-	B103	3 layer	B520 ch. 1
CO/NO	500/500 vpm	2500/2500 vpm	-	AA															
CO/NO	2000/1000 vpm	10000/5000 vpm	-	AB					60	B233									
CO/NO	1000/1000 vpm	5000/5000 vpm	-	AC					90	B232									
CO/NO	1 %/1000 vpm	5 %/5000 vpm	-	AD					6	B235				60	B233	A3468-B542			

ANALYSIERTEIL/ANALYZER SECTION/PARTIE ANALYSE

Analysierteil **7MB2335-**
Analyzer Section **7MB2335-**
Partie analyse **7MB2335-**

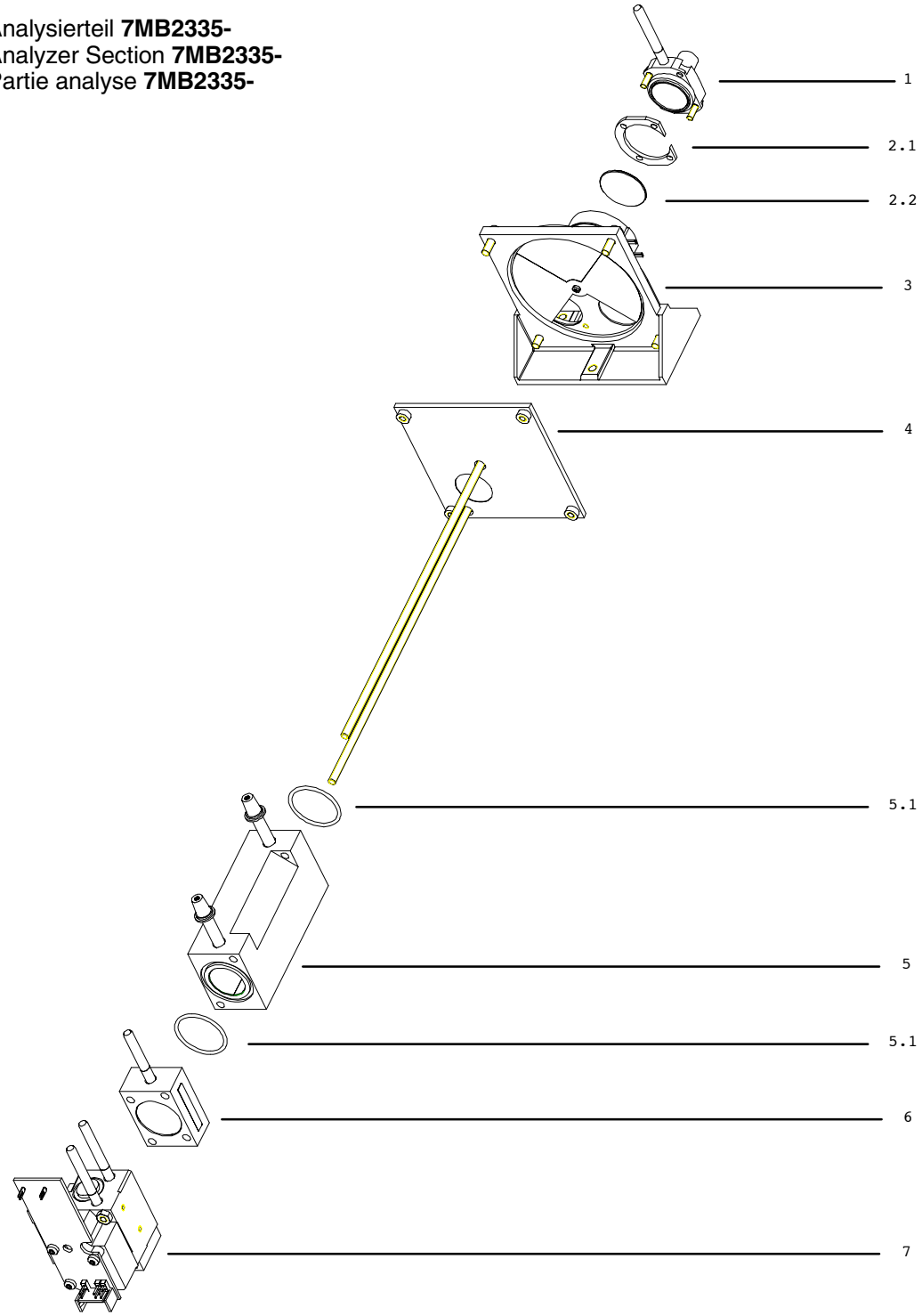

Bezeichnungen s. Seite 7-19, 7-20 Designations see page 7-19, 7-20
Désignations voir page 7-19, 7-20

7MB2335-

Teil-Nr. Part No. Nº Pièce	Bezeichnung Designation Désignation	Bestell-Nr. Order No. Nº de référence	Bemerkungen Remarks Remarques
1 *)	Strahler IR source Source de rayonnement	C79451–A3468–B206	
2.1	Distanzstück Spacer Entretoise	C79451–A3468–C20	
2.2	Optisches Filter Optical filter Filtre optique	C75285–Z1491–C5	für NO **) for NO **) pour NO **)
2.2	Optisches Filter Optical filter Filtre optique	C79285–Z1302–A4	für SO_2 **) for SO_2 **) pour SO_2 **)
2.2	Optisches Filter Optical filter Filtre optique	C79285–Z1491–C2	für C_2H_4 for C_2H_4 pour C_2H_4
2.2	Optisches Filter Optical filter Filtre optique	A5E00069310	für C_6H_{14} for C_6H_{14} pour C_6H_{14}
2.2	Optisches Filter Optical filter Filtre optique	C79451–A3182–C161	für SF_6 for SF_6 pour SF_6
3 *)	Chopper Chopper Obturateur tournant	C79451–A3468–B515	
4	Platte mit Gewindebolzen und Fenster Plate with threaded bolts and windows Plaque avec tiges filetées et fenêtres	C79451–A3468–B513	
5.1	O–Ring O–ring Joint torique	C71121–Z100–A99	
5	Analysenkammer mit O–Ring Sample cell with O–ring Cellule d'analyse avec joint torique	C79451–A3468–B231	Analysenkammer 180 mm Sample cell 180 mm Cellule d'analyse 180 mm
5	Analysenkammer mit O–Ring Sample cell with O–ring Cellule d'analyse avec joint torique	C79451–A3468–B232	Analysenkammer 90 mm Sample cell 90 mm Cellule d'analyse 90 mm
5	Analysenkammer mit O–Ring Sample cell with O–ring Cellule d'analyse avec joint torique	C79451–A3468–B233	Analysenkammer 60 mm Sample cell 60 mm Cellule d'analyse 60 mm
5	Analysenkammer mit O–Ring Sample cell with O–ring Cellule d'analyse avec joint torique	C79451–A3468–B234	Analysenkammer 20 mm Sample cell 20 mm Cellule d'analyse 20 mm
5	Analysenkammer Sample cell Cellule d'analyse	C79451–A3468–B235	Analysenkammer 6 mm Sample cell 6 mm Cellule d'analyse 6 mm
5	Analysenkammer Sample cell Cellule d'analyse	C79451–A3468–B236	Analysenkammer 2 mm Sample cell 2 mm Cellule d'analyse 2 mm
6	Gasfilter Gas filter Filtre de gaz	C79451–A3458–B500	für CO for CO pour CO
6	Gasfilter Gas filter Filtre de gaz	C79451–A3458–B508	für SO_2 for SO_2 pour SO_2
6	Gasfilter Gas filter Filtre de gaz	C79451–A3458–B541	für CO_2, kleinster MB < 5 % for CO_2, smallest meas. range < 5 % pour CO_2, étendue min. < 5 %
6	Gasfilter Gas filter Filtre de gaz	C79451–A3458–B542	für CH_4, kleinster MB< 2 % for CH_4, smallest meas. range < 2 % pour CH_4, étendue min. < 2 %
6	Gasfilter Gas filter Filtre de gaz	C79451–A3468–B543	für C_6,H_{14} for C_6,H_{14} pour C_6,H_{14}

*), **) siehe Folgeseite, see following page, voir page suivante

7MB2335-

Teil-Nr. Part No. Nº Pièce	Bezeichnung Designation Désignation	Bestell-Nr. Order No. Nº de référence	Bemerkungen Remarks Remarques
7 *)	Empfängerkammer Detector Cellule de détection	C79451–A3468–B525	für CO, kleinster MB < 5 % for CO, smallest meas. range < 5 % pour CO, étendue min. < 5 %
7 *)	Empfängerkammer Detector Cellule de détection	C79451–A3468–B528	für CO, kleinster MB ≥ 5 % for CO, smallest meas. range ≥ 5 % pour CO, étendue min. ≥ 5 %
7 *)	Empfängerkammer Detector Cellule de détection	C79451–A3468–B536	für CO_2, kleinster MB < 1000 vpm for CO_2, smallest meas.range < 1000 vpm pour CO_2, étendue min. < 1000 vpm
7 *)	Empfängerkammer Detector Cellule de détection	C79451–A3468–B526	für CO_2, kleinster MB ≥ 1000 vpm for CO_2, smallest meas.range ≥1000 vpm pour CO_2, étendue min. ≥ 1000 vpm
7 *)	Empfängerkammer Detector Cellule de détection	C79451–A3468–B527	für CH_4, kleinster MB < 20 % for CH_4, smallest meas. range < 20 % pour CH_4, étendue min. < 20 %
7 *)	Empfängerkammer Detector Cellule de détection	C79451–A3468–B529	für CH_4, kleinster MB ≥ 20 % for CH_4, smallest meas. range ≥ 20 % pour CH_4, étendue min. ≥ 20 %
7 *)	Empfängerkammer Detector Cellule de détection	C79451–A3468–B537	für C_2H_4 for C_2H_4 pour C_2H_4
7 *)	Empfängerkammer Detector Cellule de détection	C79451–A3468–B520	für NO for NO pour NO
7 *)	Empfängerkammer Detector Cellule de détection	C79451–A3468–B521	für SO_2 for SO_2 pour SO_2
7 *)	Empfängerkammer Detector Cellule de détection	C79451–A3468–B535	für R22 for R22 pour R22
7 *)	Empfängerkammer Detector Cellule de détection	C79451–A3468–B581	für N_2O for N_2O pour N_2O
7 *)	Empfängerkammer Detector Cellule de détection	C79451–A3468–B539	für SF_6 for SF_6 pour SF_6
7 *)	Empfängerkammer Detector Cellule de détection	C79451–A3468–B538	für C_6H_{14} for C_6H_{14} pour C_6H_{14}

*) Nach dem Austausch werden spezielle Arbeiten notwendig, die nur von qualifiziertem, geschultem Fachpersonal durchgeführt werden können wie z. B. Temperaturkompensation, elektrischer Grundabgleich etc.

Following replacement, special work is required which can only be carried out by qualified and trained personnel, for example temperature compensation, basic electronic adjustment etc.

Des travaux particuliers comme p. ex. la compensation de température, le réglage de base électrique etc., ne pouvant être exécutés que par du personnel qualifié sont à effectuer après un remplacement de pièces.

**) Bitte nach Austausch die Wasserdampfquerempfindlichkeiten überprüfen.

Following replacement, please check the water vapor interference.

Après le remplacement, veuillez contrôler l'influence de la vapeur d'eau.

ANALYSIERTEIL/ANALYZER SECTION/PARTIE ANALYSE

Analysierteil **7MB2337-**
Analyzer Section **7MB2337-**
Partie analyse **7MB2337-**

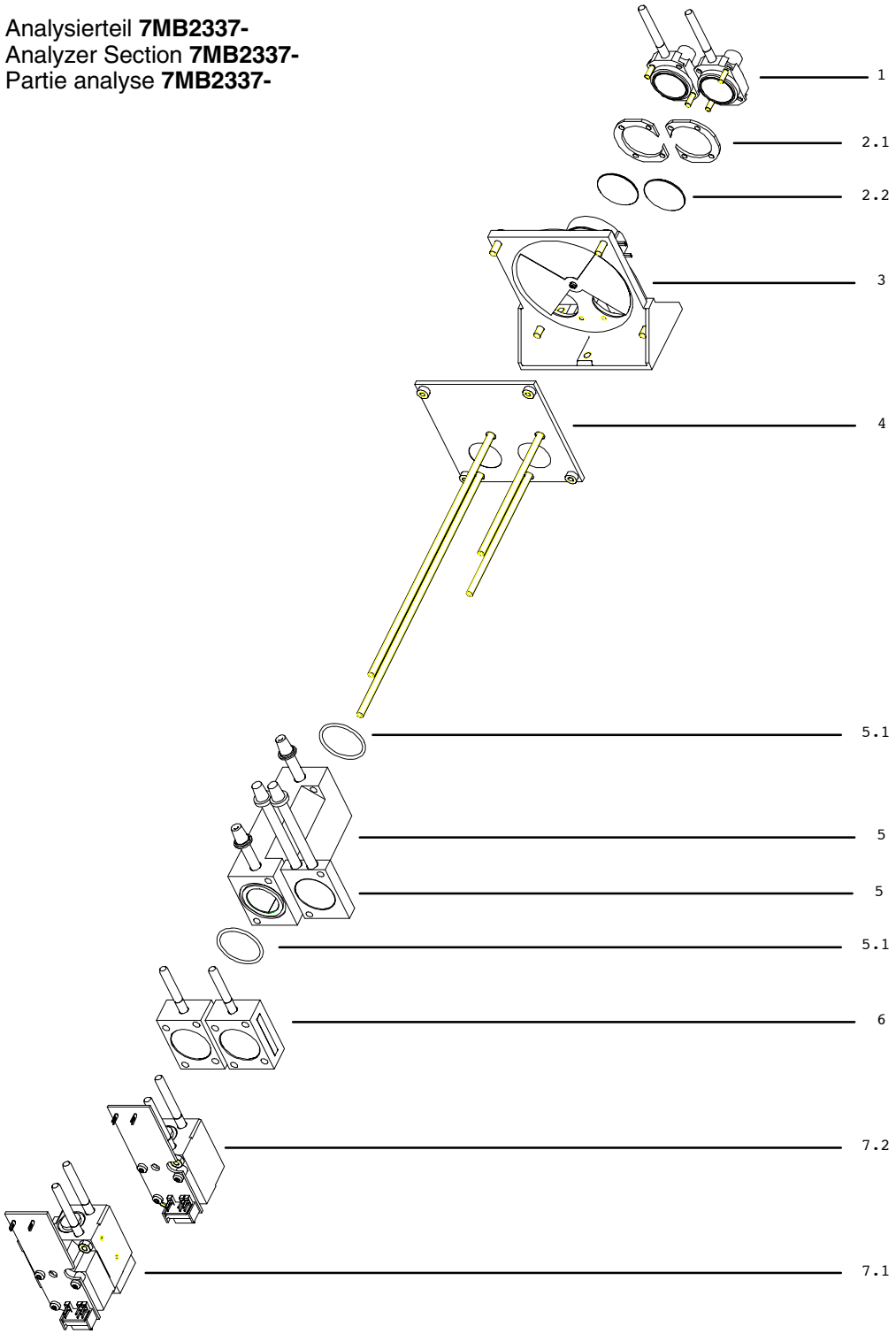

Bezeichnungen s. Seite 7-23 Designations see page 7-23 Désignations voir page 7-23

7MB2337-

Teil-Nr. Part No. Nº Pièce	Bezeichnung Designation Désignation	Bestell-Nr. Order No. Nº de référence	Bemerkungen Remarks Remarques
1 *)	Strahler IR source Source de rayonnement	C79451–A3468–B206	
2.1	Distanzstück Spacer Entretoise	C79451–A3468–C20	
2.2	Optisches Filter Optical filter Filtre optique	C75285–Z1491–C5	für NO **) for NO **) pour NO **)
2.2	Optisches Filter Optical filter Filtre optique	C79285–Z1302–A4	für SO_2 **) for SO_2 **) pour SO_2 **)
2.2	Optisches Filter Optical filter Filtre optique	C79285–Z1491–C2	für C_2H_4 for C_2H_4 pour C_2H_4
2.2	Optisches Filter Optical filter Filtre optique	A5E00069310	für C_6H_{14} for C_6H_{14} pour C_6H_{14}
2.2	Optisches Filter Optical filter Filtre optique	C79451–A3182–C161	für SF_6 for SF_6 pour SF_6
3 *)	Chopper Chopper Obturateur tournant	C79451–A3468–B516	
4	Platte mit Gewindebolzen und Fenstern Plate with threaded bolts and windows Plaque avec tiges filetées et fenêtres	C79451–A3468–B514	
5.1	O–Ring O–ring Joint torique	C71121–Z100–A99	
5	Analysenkammer mit O–Ring Sample cell with O–ring Cellule d'analyse avec joint torique	C79451–A3468–B231	Analysenkammer 180 mm Sample cell 180 mm Cellule d'analyse 180 mm
5	Analysenkammer mit O–Ring Sample cell with O–ring Cellule d'analyse avec joint torique	C79451–A3468–B232	Analysenkammer 90 mm Sample cell 90 mm Cellule d'analyse 90 mm
5	Analysenkammer mit O–Ring Sample cell with O–ring Cellule d'analyse avec joint torique	C79451–A3468–B233	Analysenkammer 60 mm Sample cell 60 mm Cellule d'analyse 60 mm
5	Analysenkammer mit O–Ring Sample cell with O–ring Cellule d'analyse avec joint torique	C79451–A3468–B234	Analysenkammer 20 mm Sample cell 20 mm Cellule d'analyse 20 mm
5	Analysenkammer Sample cell Cellule d'analyse	C79451–A3468–B235	Analysenkammer 6 mm Sample cell 6 mm Cellule d'analyse 6 mm
5	Analysenkammer Sample cell Cellule d'analyse	C79451–A3468–B236	Analysenkammer 2 mm Sample cell 2 mm Cellule d'analyse 2 mm
6	Gasfilter Gas filter Filtre de gaz	C79451–A3458–B500	für CO for CO pour CO
6	Gasfilter Gas filter Filtre de gaz	C79451–A3458–B508	für SO_2 for SO_2 pour SO_2
6	Gasfilter Gas filter Filtre de gaz	C79451–A3468–B541	für CO_2, kleinster MB < 5 % for CO_2, smallest meas. range < 5 % pour CO_2, étendue min. < 5 %
6	Gasfilter Gas filter Filtre de gaz	C79451–A3468–B542	für CH_4, kleinster MB < 2 % for CH_4, smallest meas. range < 2 % pour CH_4, étendue min. < 2 %
6	Gasfilter Gas filter Filtre de gaz	C79451–A3468–B543	für C_6,H_{14} for C_6,H_{14} pour C_6,H_{14}

*), **) siehe Folgeseite, see following page, voir page suivante

7MB2337-

Teil-Nr. Part No. Nº Pièce	Bezeichnung Designation Désignation	Bestell-Nr. Order No. Nº de référence	Bemerkungen Remarks Remarques
7.1/7.2 *)	Empfängerkammer Detector Cellule de détection	C79451–A3468–B525	für CO, kleinster MB < 5 % for CO, smallest meas. range < 5 % pour CO, étendue min. < 5 %
7.1/7.2 *)	Empfängerkammer Detector Cellule de détection	C79451–A3468–B528	für CO, kleinster MB $\geq$ 5 % for CO, smallest meas. range $\geq$ 5 % pour CO, étendue min. $\geq$ 5 %
7,1/7.2 *)	Empfängerkammer Detector Cellule de détection	C79451–A3468–B536	für CO_2, kleinster MB < 1000 vpm for CO_2, smallest meas. range < 1000 vpm pour CO_2, étendue min. < 1000 vpm
7.1/7.2 *)	Empfängerkammer Detector Cellule de détection	C79451–A3468–B526	für CO_2, kleinster MB $\geq$ 1000 vpm for CO_2, MBmin $\geq$ 1000 vpm pour CO_2, MBmin $\geq$ 1000 vpm
7.1/7.2 *)	Empfängerkammer Detector Cellule de détection	C79451–A3468–B527	für CH_4, kleinster MB < 20 % for CH_4, smallest meas. range < 20 % pour CH_4, étendue min. < 20 %
7.1/7.2 *)	Empfängerkammer Detector Cellule de détection	C79451–A3468–B529	für CH_4, kleinster MB $\geq$ 20 % for CH_4, smallest meas. range $\geq$ 20 % pour CH_4, étendue min. $\geq$ 20 %
7.1/7.2 *)	Empfängerkammer Detector Cellule de détection	C79451–A3468–B537	für C_2H_4 for C_2H_4 pour C_2H_4
7.1 *)	Empfängerkammer Detector Cellule de détection	C79451–A3468–B520	für NO (Kanal 1) for NO (channel 1) pour NO (canal 1)
7.2 *)	Empfängerkammer Detector Cellule de détection	C79451–A3468–B522	für NO (Kanal 2) for NO (channel 2) pour NO (canal 2)
7.1 *)	Empfängerkammer Detector Cellule de détection	C79451–A3468–B521	für SO_2 (Kanal 1) for SO_2 (channel 1) pour SO_2 (canal 1)
7.2 *)	Empfängerkammer Detector Cellule de détection	C79451–A3468–B523	für SO_2 (Kanal 2) for SO_2 (channel 2) pour SO_2 (canal 2)
7 *)	Empfängerkammer Detector Cellule de détection	C79451–A3468–B581	für N_2O for N_2O pour N_2O
7 *)	Empfängerkammer Detector Cellule de détection	C79451–A3468–B539	für SF_6 for SF_6 pour SF_6
7 *)	Empfängerkammer Detector Cellule de détection	C79451–A3468–B538	für C_6H_{14} for C_6H_{14} pour C_6H_{14}

*) Nach dem Austausch werden spezielle Arbeiten notwendig, die nur von qualifiziertem, geschultem Fachpersonal durchgeführt werden können wie z. B. Temperaturkompensation, elektrischer Grundabgleich etc.

Following replacement, special work is required which can only be carried out by qualified and trained personnel, for example temperature compensation, basic electronic adjustment etc.

Des travaux particuliers comme p. ex. la compensation de température, le réglage de base électrique etc., ne pouvant être exécutés que par du personnel qualifié sont à effectuer après un remplacement de pièces.

**) Bitte nach Austausch die Wasserdampfquerempfindlichkeiten überprüfen.

Following replacement, please check the water vapor interference.

Après le remplacement, veuillez contrôler l'influence de la vapeur d'eau.

ANALYSIERTEIL 1/ANALYZER SECTION 1/PARTIE ANALYSE 1 CO/NO

Analysierteil **7MB2338-.AA..-, -.AK..-**
Teil 1: Konfiguration für CO/NO

Analyzer Section **7MB2338-.AA..-, -.AK..-**
part 1: configuration for CO/NO

Partie analyse **7MB2338-.AA..-, -.AK..-**
partie 1: configuration pour CO/NO

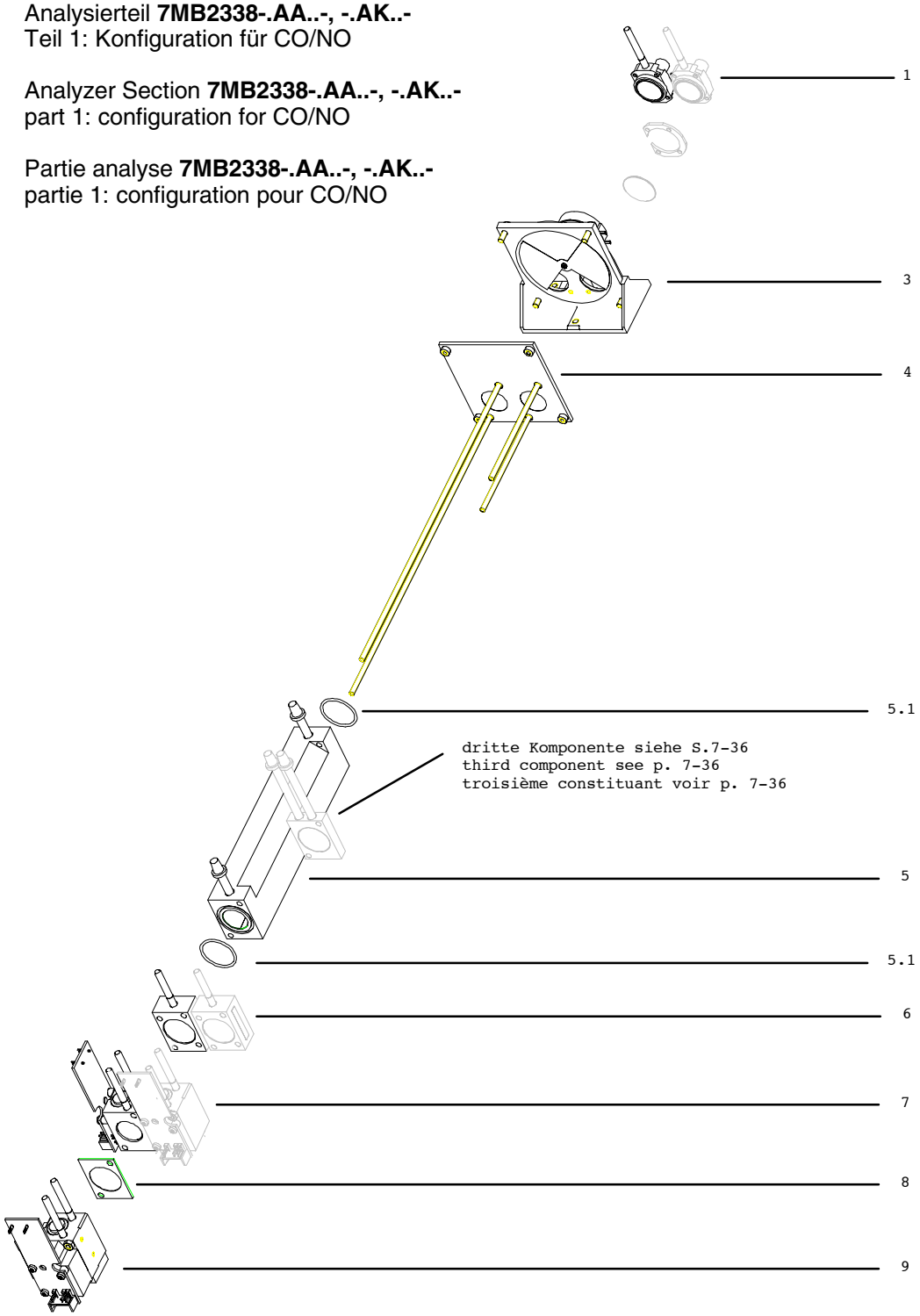

Bezeichnungen s. Seite 7-27 Designations see page 7-27 Désignations voir page 7-27

7MB2338-.AA..-, -.AK..-

Teil-Nr. Part No. Nº Pièce	Bezeichnung Designation Désignation	Bestell-Nr. Order No. Nº de référence	Bemerkungen Remarks Remarques
1 *)	Strahler IR source Source de rayonnement	C79451–A3468–B206	
3 *)	Chopper Chopper Obturateur tournant	C79451–A3468–B516	
4	Platte mit Gewindebolzen und Fenstern Plate with threaded bolts and windows Plaque avec tiges filetées et fenêtres	C79451–A3468–B514	
5.1	O–Ring O–ring Joint torique	C71121–Z100–A99	
5	Analysenkammer mit O–Ring Sample cell with O–ring Cellule d'analyse avec joint torique	C79451–A3468–B231	Analysenkammer 180 mm Sample cell 180 mm Cellule d'analyse 180 mm
6	Gasfilter Gas filter Filtre de gaz	C79451–A3458–B500	für CO for CO pour CO
7 *)	Empfängerkammer Detector Cellule de détection	C79451–A3468–B530	für CO for CO pour CO
8	Optisches Filter Optical filter Filtre optique	C79451–A3458–B103	für NO **) for NO **) pour NO **)
9 *)	Empfängerkammer Detector Cellule de détection	C79451–A3468–B520	für NO (Kanal 1) for NO (channel 1) pour NO (canal 1)

*) Nach dem Austausch werden spezielle Arbeiten notwendig, die nur von qualifiziertem, geschultem Fachpersonal durchgeführt werden können wie z. B. Temperaturkompensation, elektrischer Grundabgleich etc.

Following replacement, special work is required which can only be carried out by qualified and trained personnel, for example temperature compensation, basic electronic adjustment etc.

Des travaux particuliers comme p. ex. la compensation de température, le réglage de base électrique etc., ne pouvant être exécutés que par du personnel qualifié sont à effectuer après un remplacement de pièces.

**) Bitte nach Austausch die Wasserdampfquerempfindlichkeiten überprüfen.

Following replacement, please check the water vapor interference.

Après le remplacement, veuillez contrôler l'influence de la vapeur d'eau.

ANALYSIERTEIL 1/ANALYZER SECTION 1/PARTIE ANALYSE 1 CO/NO

Analysierteil **7MB2338-.AB..-**
Teil 1: Konfiguration für CO/NO

Analyzer Section **7MB2338-.AB..-**
part 1: configuration for CO/NO

Partie analyse **7MB2338-.AB..-**
partie 1: configuration pour CO/NO

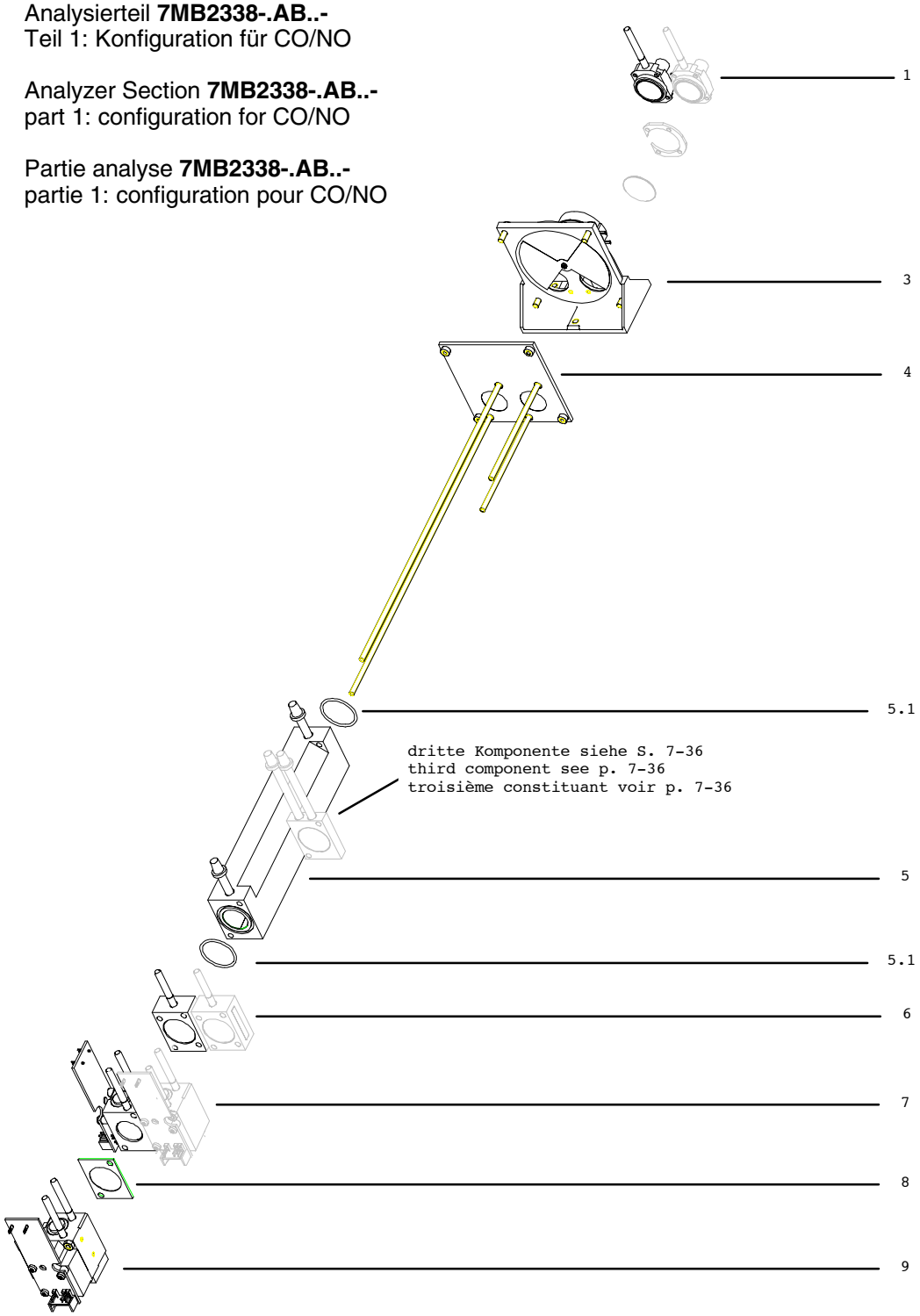

Bezeichnungen s. Seite 7-29 Designations see page 7-29 Désignations voir page 7-29

7MB2338-.AB..-

Teil-Nr. Part No. Nº Pièce	Bezeichnung Designation Désignation	Bestell-Nr. Order No. Nº de référence	Bemerkungen Remarks Remarques
1 *)	Strahler IR source Source de rayonnement	C79451–A3468–B206	
3 *)	Chopper Chopper Obturateur tournant	C79451–A3468–B516	
4	Platte mit Gewindebolzen und Fenstern Plate with threaded bolts and windows Plaque avec tiges filetées et fenêtres	C79451–A3468–B514	
5.1	O–Ring O–ring Joint torique	C71121–Z100–A99	
5	Analysenkammer mit O–Ring Sample cell with O–ring Cellule d'analyse avec joint torique	C79451–A3468–B233	Analysenkammer 60 mm Sample cell 60 mm Cellule d'analyse 60 mm
6	Gasfilter Gas filter Filtre de gaz	C79451–A3458–B500	für CO for CO pour CO
7 *)	Empfängerkammer Detector Cellule de détection	C79451–A3468–B530	für CO for CO pour CO
8	Optisches Filter Optical filter Filtre optique	C79451–A3458–B103	für NO **) for NO **) pour NO **)
9 *)	Empfängerkammer Detector Cellule de détection	C79451–A3468–B520	für NO (Kanal 1) for NO (channel 1) pour NO (canal 1)

*) Nach dem Austausch werden spezielle Arbeiten notwendig, die nur von qualifiziertem, geschultem Fachpersonal durchgeführt werden können wie z. B. Temperaturkompensation, elektrischer Grundabgleich etc.

Following replacement, special work is required which can only be carried out by qualified and trained personnel, for example temperature compensation, basic electronic adjustment etc.

Des travaux particuliers comme p. ex. la compensation de température, le réglage de base électrique etc., ne pouvant être exécutés que par du personnel qualifié sont à effectuer après un remplacement de pièces.

**) Bitte nach Austausch die Wasserdampfquerempfindlichkeiten überprüfen.

Following replacement, please check the water vapor interference.

Après le remplacement, veuillez contrôler l'influence de la vapeur d'eau.

ANALYSIERTEIL 1/ANALYZER SECTION 1/PARTIE ANALYSE 1 CO/NO

Analysierteil **7MB2338-.AC..-**
Teil 1: Konfiguration für CO/NO

Analyzer Section **7MB2338-.AC..-**
part 1: configuration for CO/NO

Partie analyse **7MB2338-.AC..-**
partie 1: configuration pour CO/NO

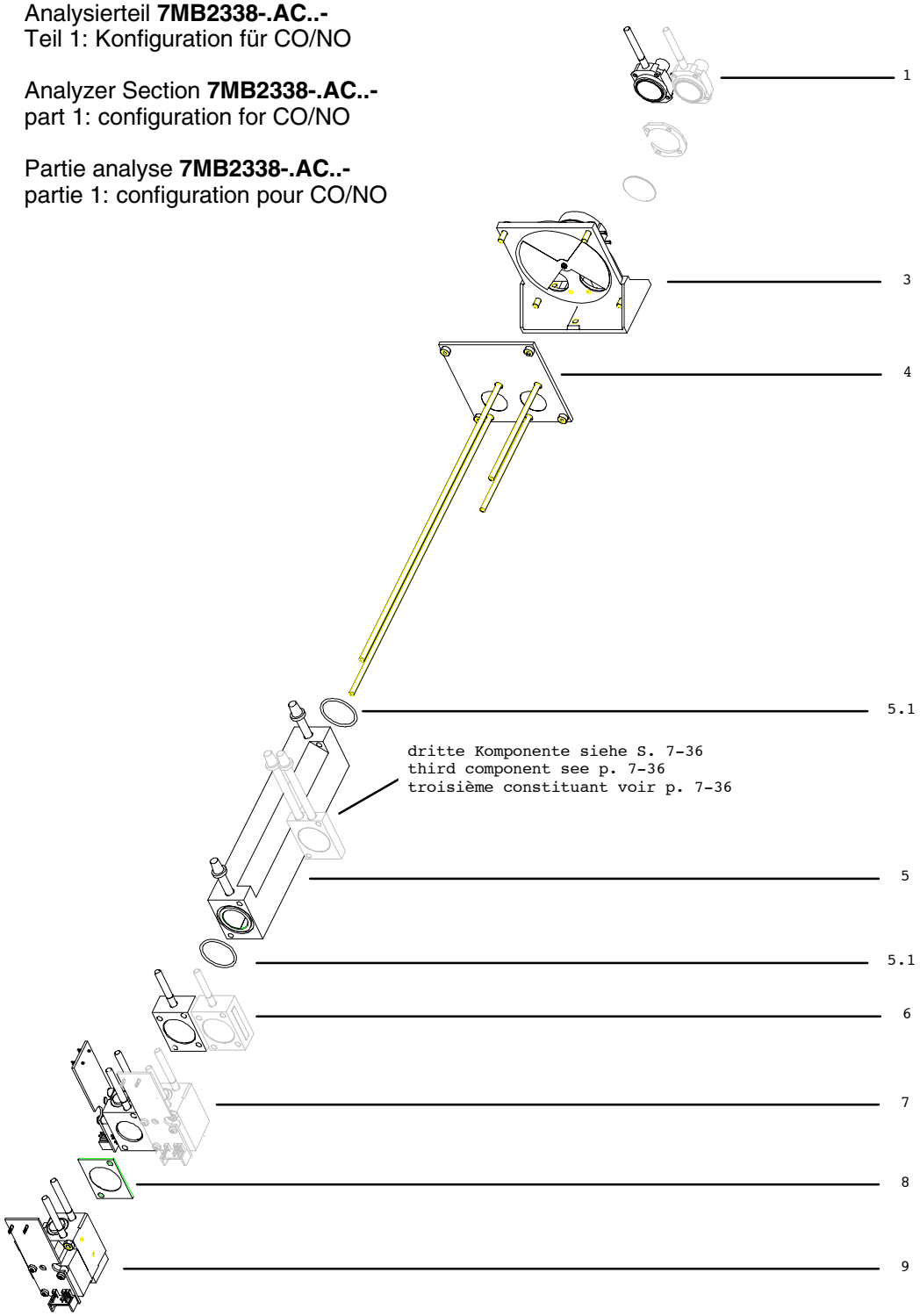

Bezeichnungen s. Seite 7-31 Designations see page 7-31 Désignations voir page 7-31

7MB2338-.AC..-

Teil-Nr. Part No. Nº Pièce	Bezeichnung Designation Désignation	Bestell-Nr. Order No. Nº de référence	Bemerkungen Remarks Remarques
1 *)	Strahler IR source Source de rayonnement	C79451–A3468–B206	
3 *)	Chopper Chopper Obturateur tournant	C79451–A3468–B516	
4	Platte mit Gewindebolzen und Fenstern Plate with threaded bolts and windows Plaque avec tiges filetées et fenêtres	C79451–A3468–B514	
5.1	O–Ring O–ring Joint torique	C71121–Z100–A99	
5	Analysenkammer mit O–Ring Sample cell with O–ring Cellule d'analyse avec joint torique	C79451–A3468–B232	Analysenkammer 90 mm Sample cell 90 mm Cellule d'analyse 90 mm
6	Gasfilter Gas filter Filtre de gaz	C79451–A3458–B500	für CO for CO pour CO
7 *)	Empfängerkammer Detector Cellule de détection	C79451–A3468–B530	für CO for CO pour CO
8	Optisches Filter Optical filter Filtre optique	C79451–A3458–B103	für NO **) for NO **) pour NO **)
9 *)	Empfängerkammer Detector Cellule de détection	C79451–A3468–B520	für NO (Kanal 1) for NO (channel 1) pour NO (canal 1)

*) Nach dem Austausch werden spezielle Arbeiten notwendig, die nur von qualifiziertem, geschultem Fachpersonal durchgeführt werden können wie z. B. Temperaturkompensation, elektrischer Grundabgleich etc.

Following replacement, special work is required which can only be carried out by qualified and trained personnel, for example temperature compensation, basic electronic adjustment etc.

Des travaux particuliers comme p. ex. la compensation de température, le réglage de base électrique etc., ne pouvant être exécutés que par du personnel qualifié sont à effectuer après un remplacement de pièces.

**) Bitte nach Austausch die Wasserdampfquerempfindlichkeiten überprüfen.

Following replacement, please check the water vapor interference.

Après le remplacement, veuillez contrôler l'influence de la vapeur d'eau.

ANALYSIERTEIL 1/ANALYZER SECTION 1/PARTIE ANALYSE 1 CO/NO

Analysierteil **7MB2338-.AD...-...-**
Teil 1: Konfiguration für CO/NO

Analyzer Section **7MB2338-.AD..,-...-**
part 1: configuration for CO/NO

Partie analyse **7MB2338-.AD..-...-**
partie 1: configuration pour CO/NO

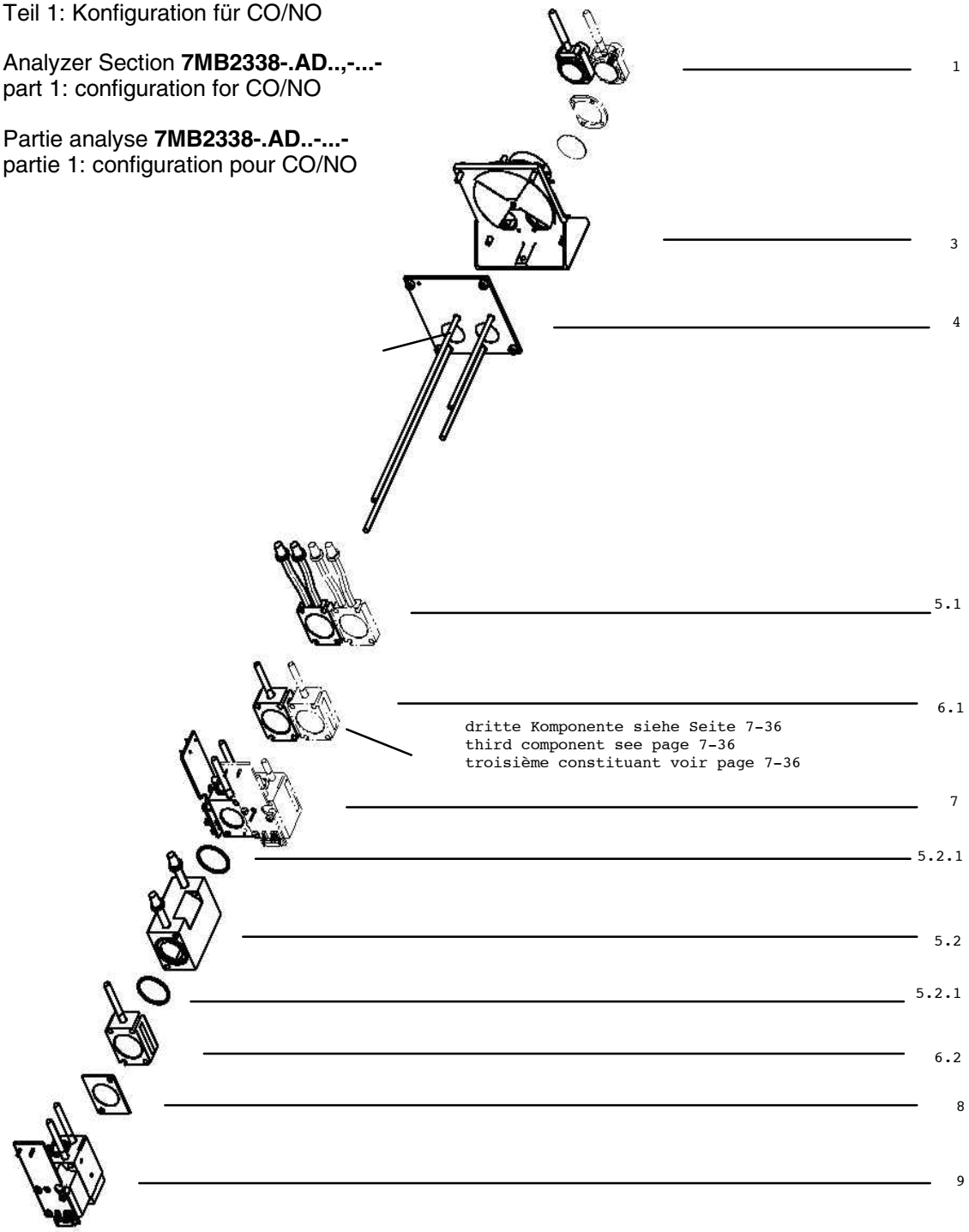

Bezeichnungen s. Seite 7-33 Designations see page 7-33 Désignations voir page 7-33

7MB2338-.AD..-

Teil-Nr. Part No. Nº Pièce	Bezeichnung Designation Désignation	Bestell-Nr. Order No. Nº de référence	Bemerkungen Remarks Remarques
1 *)	Strahler IR source Source de rayonnement	C79451–A3468–B206	
3 *)	Chopper Chopper Obturateur tournant	C79451–A3468–B516	
4	Platte mit Gewindebolzen und Fenstern Plate with threaded bolts and windows Plaque avec tiges filetées et fenêtres	C79451–A3468–B514	
5.1	Analysenkammer Sample cell Cellule d'analyse	C79451–A3468–B235	Analysenkammer 6 mm Sample cell 6 mm Cellule d'analyse 6 mm
6.1	Gasfilter Gas filter Filtre de gaz	C79451–A3458–B500	für CO for CO pour CO
7 *)	Empfängerkammer Detector Cellule de détection	C79451–A3468–B530	für CO for CO pour CO
5.2	Analysenkammer mit O–Ring Sample cell with o–ring Cellule d'analyse avec joint torique	C79451–A3468–B233	Analysenkammer 60 mm Sample cell 60 mm Cellule d'analyse 60 mm
5.2.1	O–Ring O–ring Joint torique	C71121–Z100–A99	
6.2	Gasfilter Gas filter Filtre de gaz	C79451–A3468–B542	für NO for NO pour NO
8	Optisches Filter Optical filter Filtre optique	C79451–A3458–B103	für NO **) for NO **) pour NO **)
9 *)	Empfängerkammer Detector Cellule de détection	C79451–A3468–B520	für NO (Kanal 1) for NO (channel 1) pour NO (canal 1)

*) Nach dem Austausch werden spezielle Arbeiten notwendig, die nur von qualifiziertem, geschultem Fachpersonal durchgeführt werden können wie z. B. Temperaturkompensation, elektrischer Grundabgleich etc.

Following replacement, special work is required which can only be carried out by qualified and trained personnel, for example temperature compensation, basic electronic adjustment etc.

Des travaux particuliers comme p. ex. la compensation de température, le réglage de base électrique etc., ne pouvant être exécutés que par du personnel qualifié sont à effectuer après un remplacement de pièces.

**) Bitte nach Austausch die Wasserdampfquerempfindlichkeiten überprüfen.

Following replacement, please check the water vapor interference.

Après le remplacement, veuillez contrôler l'influence de la vapeur d'eau.

ANALYSIERTEIL 1/ANALYZER SECTION 1/PARTIE ANALYSE 1 $CO/CO_2 + CO_2/CH_4$

Analysierteil **7MB2338-.BA.., -BD, -.CB..-**
Teil 1: Konfiguration für CO/CO_2, CO_2/CH_4

Analyzer Section **7MB2338-.BA.., -BD, -.CB..-**
part 1: configuration for CO/CO_2, CO_2/CH_4

Partie analyse **7MB2338-.BA.., BD, -.CB..-**
partie 1: configuration pour CO/CO_2, CO_2/CH_4

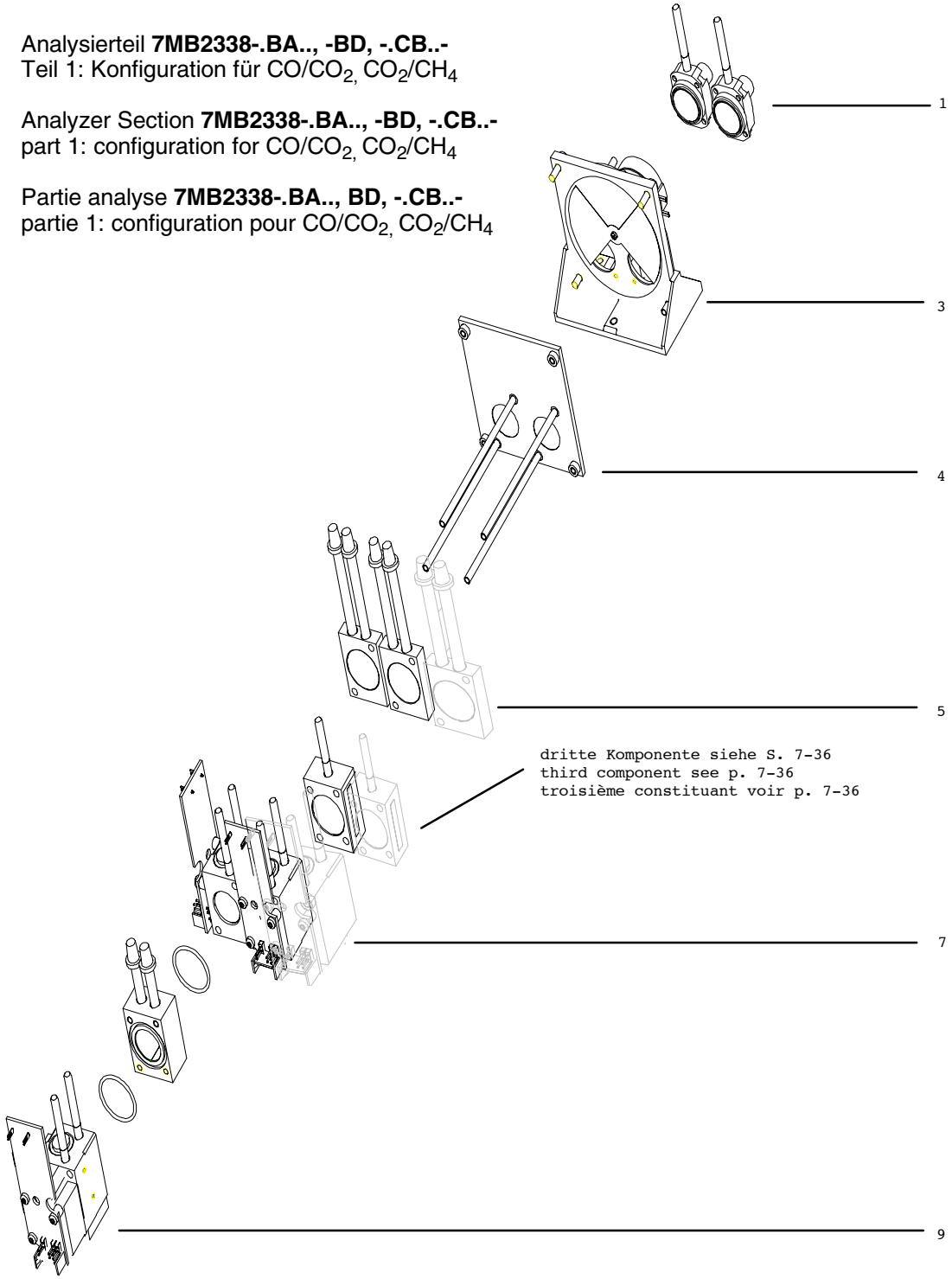

Bezeichnungen s. Seite 7-35 Designations see page 7-35 Désignations voir page 7-35

7MB2338-

Teil-Nr. Part No. Nº Pièce	Bezeichnung Designation Désignation	Bestell-Nr. Order No. Nº de référence	Bemerkungen Remarks Remarques
1 *)	Strahler IR source Source de rayonnement	C79451–A3468–B206	
3 *)	Chopper Chopper Obturateur tournant	C79451–A3468–B516	
4	Platte mit Gewindebolzen und Fenstern Plate with threaded bolts and windows Plaque avec tiges filetées et fenêtres	C79451–A3468–B514	

7MB2338-.BA..-, -.BD..-

5	Analysenkammer Sample cell Cellule d'analyse	C79451–A3468–B236	Analysenkammer 2 mm Sample cell 2 mm Cellule d'analyse 2 mm
7 *)	Empfängerkammer Detector Cellule de détection	C79451–A3468–B532	für CO for CO pour CO
9 *)	Empfängerkammer Detector Cellule de détection	C79451–A3468–B526	für CO_2 for CO_2 pour CO_2

7MB2338-.CB..-

5	Analysenkammer Sample cell Cellule d'analyse	C79451–A3468–B235	Analysenkammer 6 mm Sample cell 6 mm Cellule d'analyse 6 mm
7 *)	Empfängerkammer Detector Cellule de détection	C79451–A3468–B531	für CO_2 for CO_2 pour CO_2
9 *)	Empfängerkammer Detector Cellule de détection	C79451–A3468–B527	für CH_4 for CH_4 pour CH_4

*) Nach dem Austausch werden spezielle Arbeiten notwendig, die nur von qualifiziertem, geschultem Fachpersonal durchgeführt werden können wie z. B. Temperaturkompensation, elektrischer Grundabgleich etc.

Following replacement, special work is required which can only be carried out by qualified and trained personnel, for example temperature compensation, basic electronic adjustment etc.

Des travaux particuliers comme p. ex. la compensation de température, le réglage de base électrique etc., ne pouvant être exécutés que par du personnel qualifié sont à effectuer après un remplacement de pièces.

ANALYSIERTEIL 1/ANALYZER SECTION 1/PARTIE ANALYSE 1 CO/CO_2 + CO_2/CH_4

Analysierteil **7MB2338-.BB..-, -.CA..-**
Teil 1: Konfiguration für CO/CO_2, CO_2/CH_4

Analyzer Section **7MB2338-.BB..-, -.CA..-**
part 1: configuration for CO/CO_2, CO_2/CH_4

Partie analyse **7MB2338-.BB..-, -.CA..-**
partie 1: configuration pour CO/CO_2, CO_2/CH_4

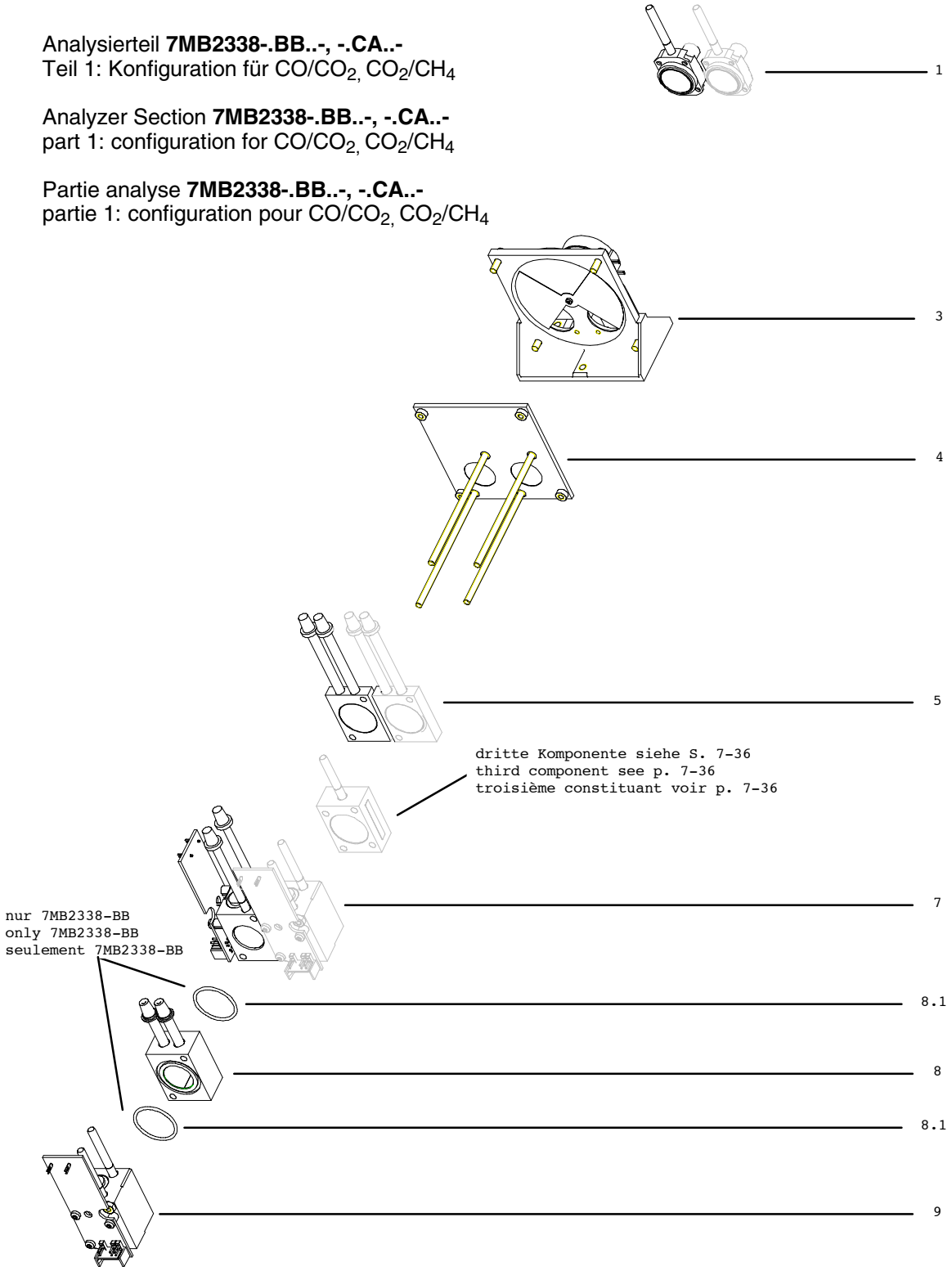

Bezeichnungen s. Seite 7-37 Designations see page 7-37 Désignations voir page 7-37

7MB2338-

Teil-Nr. Part No. Nº Pièce	Bezeichnung Designation Désignation	Bestell-Nr. Order No. Nº de référence	Bemerkungen Remarks Remarques
1 *)	Strahler IR source Source de rayonnement	C79451–A3468–B206	
3 *)	Chopper Chopper Obturateur tournant	C79451–A3468–B516	
4	Platte mit Gewindebolzen und Fenstern Plate with threaded bolts and windows Plaque avec tiges filetées et fenêtres	C79451–A3468–B514	

7MB2338-.BB..-

5	Analysenkammer Sample cell Cellule d'analyse	C79451–A3468–B236	Analysenkammer 2 mm Sample cell 2 mm Cellule d'analyse 2 mm
7 *)	Empfängerkammer Detector Cellule de détection	C79451–A3468–B532	für CO for CO pour CO
8.1	O–Ring O–ring Joint torique	C71121–Z100–A99	
8	Analysenkammer mit O–Ring Sample cell with O–ring Cellule d'analyse avec joint torique	C79451–A3468–B234	Analysenkammer 20 mm Sample cell 20 mm Cellule d'analyse 20 mm
9 *)	Empfängerkammer Detector Cellule de détection	C79451–A3468–B526	für CO_2 for CO_2 pour CO_2

7MB2338-.CA..-

5	Analysenkammer Sample cell Cellule d'analyse	C79451–A3468–B235	Analysenkammer 6 mm Sample cell 6 mm Cellule d'analyse 6 mm
7 *)	Empfängerkammer Detector Cellule de détection	C79451–A3468–B531	für CO_2 for CO_2 pour CO_2
8	Analysenkammer Sample cell Cellule d'analyse	C79451–A3468–B235	Analysenkammer 6 mm Sample cell 6 mm Cellule d'analyse 6 mm
9 *)	Empfängerkammer Detector Cellule de détection	C79451–A3468–B527	für CH_4 for CH_4 pour CH_4

*) Nach dem Austausch werden spezielle Arbeiten notwendig, die nur von qualifiziertem, geschultem Fachpersonal durchgeführt werden können wie z. B. Temperaturkompensation, elektrischer Grundabgleich etc.

Following replacement, special work is required which can only be carried out by qualified and trained personnel, for example temperature compensation, basic electronic adjustment etc.

Des travaux particuliers comme p. ex. la compensation de température, le réglage de base électrique etc., ne pouvant être exécutés que par du personnel qualifié sont à effectuer après un remplacement de pièces.

ANALYSIERTEIL 1/ANALYZER SECTION 1/PARTIE ANALYSE 1 CO_2/CO

Analysierteile **7MB2338-.BJ..-, -.BK..-**
Teil 1: Konfiguration für CO_2/CO

Analyzer Section **7MB2338-.BJ..-, -.BK..-**
part 1: configuration for CO_2/CO

Partie analyse **7MB2338-.BJ..-, -.BK..-**
partie 1: configuration pour CO_2/CO

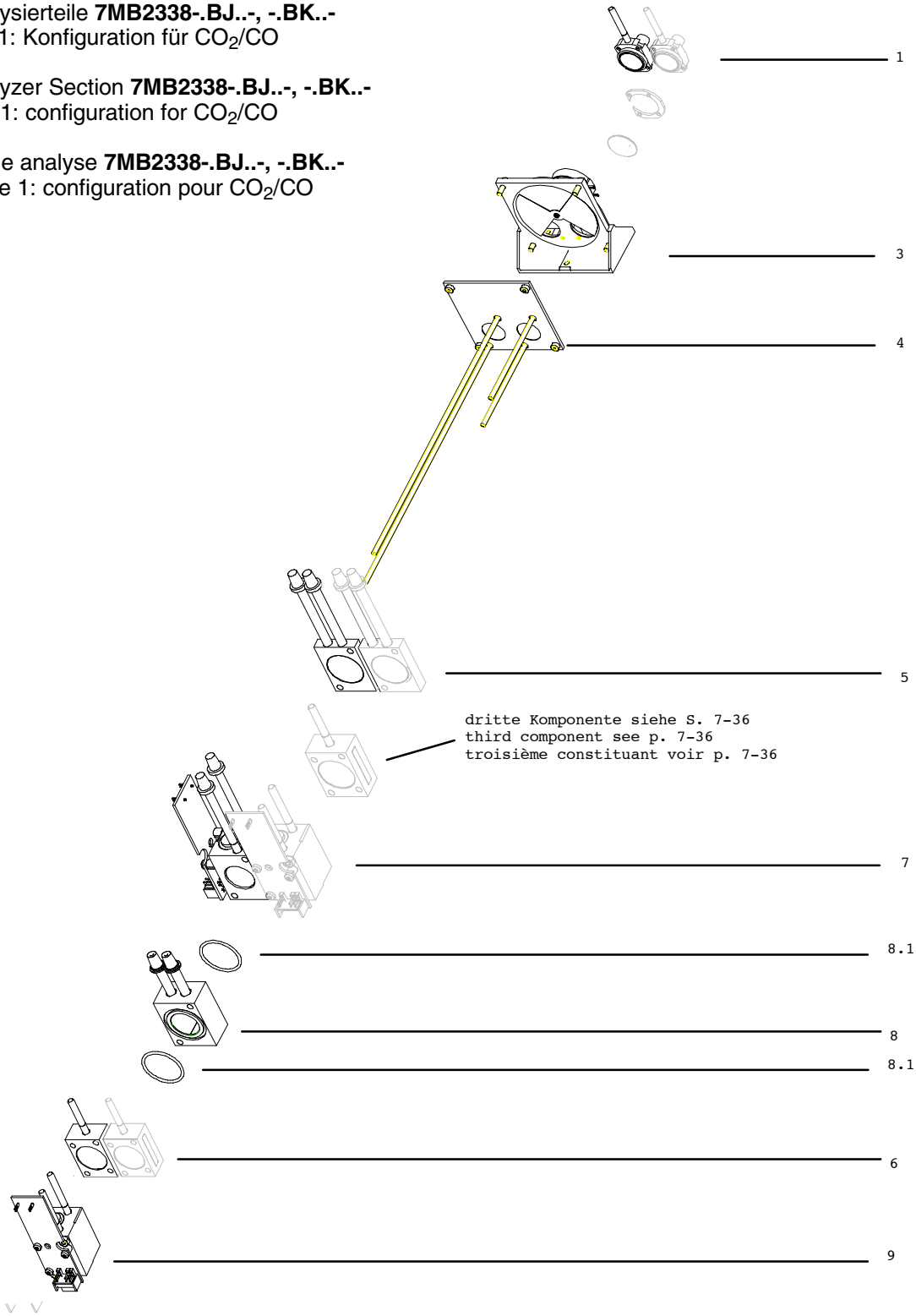

Bezeichnungen s. Seite 7-39 Designations see page 7-39 Désignations voir page 7-39

7MB2338-

Teil-Nr. Part No. Nº Pièce	Bezeichnung Designation Désignation	Bestell-Nr. Order No. Nº de référence	Bemerkungen Remarks Remarques
1 *)	Strahler IR source Source de rayonnement	C79451–A3468–B206	
3 *)	Chopper Chopper Obturateur tournant	C79451–A3468–B516	
4	Platte mit Gewindebolzen und Fenstern Plate with threaded bolts and windows Plaque avec tiges filetées et fenêtres	C79451–A3468–B514	

7MB2338-.BK..-

5	Analysenkammer Sample cell Cellule d'analyse	C79451–A3468–B236	Analysenkammer 2 mm Sample cell 2 mm Cellule d'analyse 2 mm
7 *)	Empfängerkammer Detector Cellule de détection	C79451–A3468–B531	für CO_2 for CO_2 pour CO_2
8.1	O–Ring O–ring Joint torique	C71121–Z100–A99	
8	Analysenkammer mit O–Ring Sample cell with O–ring Cellule d'analyse avec joint torique	C79451–A3468–B234	Analysenkammer 20 mm Sample cell 20 mm Cellule d'analyse 20 mm
6	Gasfilter Gas filter Filtre de gaz	C79451–A3458–B500	für CO for CO pour CO
9 *)	Empfängerkammer Detector Cellule de détection	C79451–A3468–B528	für CO for CO pour CO

7MB2338-.BJ..-

5	Analysenkammer Sample cell Cellule d'analyse	C79451–A3468–B235	Analysenkammer 6 mm Sample cell 6 mm Cellule d'analyse 6 mm
7 *)	Empfängerkammer Detector Cellule de détection	C79451–A3468–B531	für CO_2 for CO_2 pour CO_2
8.1	O–Ring O–ring Joint torique	C71121–Z100–A99	
8	Analysenkammer mit O–Ring Sample cell with O–ring Cellule d'analyse avec joint torique	C79451–A3468–B231	Analysenkammer 180 mm Sample cell 180 mm Cellule d'analyse 180 mm
6	Gasfilter Gas filter Filtre de gaz	C79451–A3458–B500	für CO for CO pour CO
9 *)	Empfängerkammer Detector Cellule de détection	C79451–A3468–B525	für CO for CO pour CO

*) s. Fußnote Seite 7-37

*) see footnote page 7-37

*) voir page 7-37

ANALYSIERTEIL 2/ANALYZER SECTION 2/PARTIE ANALYSE 2

Analysierteile **7MB2338-....0-.□□.**
Teil 2: dritte Komponente

Analyzer Sections **7MB2338-....0-.□□.**
part 2: third component

Parties analyse **7MB2338-....0-.□□.**
partie 2: troisième constituant
Graue Bauteile: Teil 1 (Beispiel)
Gray parts: part 1 (example)
Pièces grises: partie 1 (exemple)

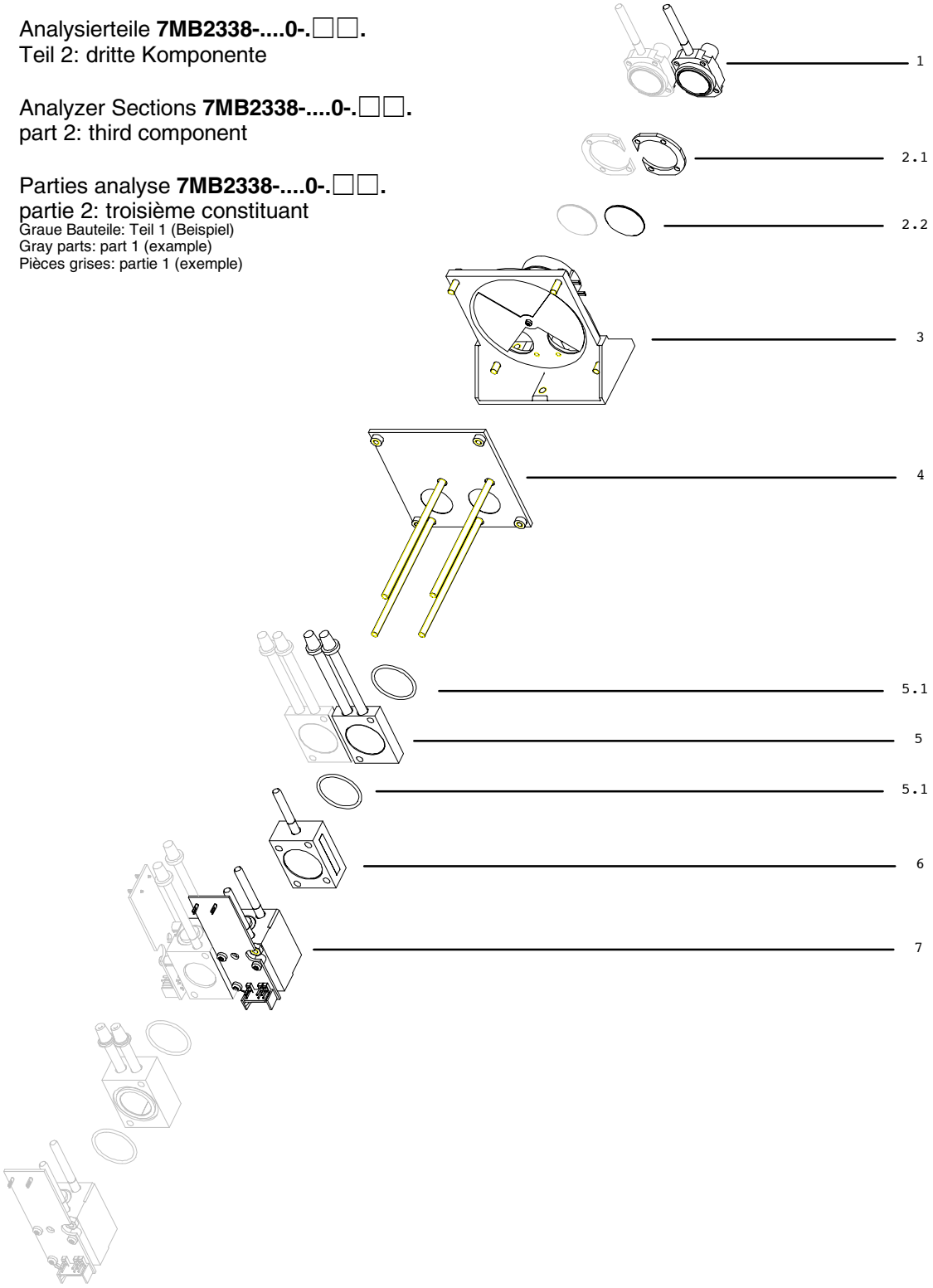

Bezeichnungen s. Seite 7-41/7-42 Designations see page 7-41/7-42
Désignations voir page 7-41/7-42

7MB2338-....0-.□□.

Teil-Nr. Part No. Nº Pièce	Bezeichnung Designation Désignation	Bestell-Nr. Order No. Nº de référence	Bemerkungen Remarks Remarques
1 *)	Strahler IR source Source de rayonnement	C79451–A3468–B206	
2.1	Distanzstück Spacer Entretoise	C79451–A3468–C20	
2.2	Optisches Filter Optical filter Filtre optique	C75285–Z1491–C5	für NO **) for NO **) pour NO **)
2.2	Optisches Filter Optical filter Filtre optique	C79285–Z1302–A4	für SO_2 **) for SO_2 **) pour SO_2 **)
2.2	Optisches Filter Optical filter Filtre optique	C79285–Z1491–C2	für C_2H_4 for C_2H_4 pour C_2H_4
2.2	Optisches Filter Optical filter Filtre optique	A5E00069310	für C_6H_{14} for C_6H_{14} pour C_6H_{14}
2.2	Optisches Filter Optical filter Filtre optique	C79451–A3182–C161	für SF_6 for SF_6 pour SF_6
3 *)	Chopper Chopper Obturateur tournant	C79451–A3468–B516	
4	Platte mit Gewindebolzen und Fenstern Plate with threaded bolts and windows Plaque avec tiges filetées et fenêtres	C79451–A3468–B514	
5.1	O–Ring O–ring Joint torique	C71121–Z100–A99	
5	Analysenkammer mit O–Ring Sample cell with O–ring Cellule d'analyse avec joint torique	C79451–A3468–B231	Analysenkammer 180 mm Sample cell 180 mm Cellule d'analyse 180 mm
5	Analysenkammer mit O–Ring Sample cell with O–ring Cellule d'analyse avec joint torique	C79451–A3468–B232	Analysenkammer 90 mm Sample cell 90 mm Cellule d'analyse 90 mm
5	Analysenkammer mit O–Ring Sample cell with O–ring Cellule d'analyse avec joint torique	C79451–A3468–B233	Analysenkammer 60 mm Sample cell 60 mm Cellule d'analyse 60 mm
5	Analysenkammer mit O–Ring Sample cell with O–ring Cellule d'analyse avec joint torique	C79451–A3468–B234	Analysenkammer 20 mm Sample cell 20 mm Cellule d'analyse 20 mm
5	Analysenkammer Sample cell Cellule d'analyse	C79451–A3468–B235	Analysenkammer 6 mm Sample cell 6 mm Cellule d'analyse 6 mm
5	Analysenkammer Sample cell Cellule d'analyse	C79451–A3468–B236	Analysenkammer 2 mm Sample cell 2 mm Cellule d'analyse 2 mm

*) siehe Folgeseite, see following page, voir page suivante

**) Bitte nach Austausch die Wasserdampfquerempfindlichkeiten überprüfen.
Following replacement, please check the water vapor interference.
Après le remplacement, veuillez contrôler l'influence de la vapeur d'eau.

7MB2338-....0-.□□.

Teil-Nr. Part No. Nº Pièce	Bezeichnung Designation Désignation	Bestell-Nr. Order No. Nº de référence	Bemerkungen Remarks Remarques
6	Gasfilter Gas filter Filtre de gaz	C79451–A3458–B500	für CO for CO pour CO
6	Gasfilter Gas filter Filtre de gaz	C79451–A3458–B508	für SO_2 for SO_2 pour SO_2
6	Gasfilter Gas filter Filtre de gaz	C79451–A3468–B541	für CO_2, kleinster MB < 5 % for CO_2, smallest meas. range < 5 % pour CO_2, étendue min. < 5 %
6	Gasfilter Gas filter Filtre de gaz	C79451–A3468–B542	für CH_4, kleinster MB < 2 % for CH_4, smallest meas. range < 2 % pour CH_4, étendue min. < 2 %
6	Gasfilter Gas filter Filtre de gaz	C79451–A3468–B543	für C_6H_{14} for C_6H_{14} pour C_6H_{14}
7 *)	Empfängerkammer Detector Cellule de détection	C79451–A3468–B525	für CO, kleinster MB < 5 % for CO, smallest meas. range < 5 % pour CO, étendue min. < 5 %
7 *)	Empfängerkammer Detector Cellule de détection	C79451–A3468–B528	für CO, kleinster MB $\geq$ 5 % for CO, smallest meas. range $\geq$ 5 % pour CO, étendue min. $\geq$ 5 %
7 *)	Empfängerkammer Detector Cellule de détection	C79451–A3468–B536	für CO_2, kleinster MB < 1000 vpm for CO_2, smallest meas. range < 1000 vpm pour CO_2, étendue min. < 1000 vpm
7 *)	Empfängerkammer Detector Cellule de détection	C79451–A3468–B526	für CO_2, kleinster MB $\geq$ 1000 vpm for CO_2, smallest meas. range $\geq$ 1000 vpm pour CO_2, étendue min. $\geq$ 1000 vpm
7 *)	Empfängerkammer Detector Cellule de détection	C79451–A3468–B527	für CH_4, kleinster MB < 20 % for CH_4, smallest meas. range < 20 % pour CH_4, étendue min. < 20 %
7 *)	Empfängerkammer Detector Cellule de détection	C79451–A3468–B529	für CH_4, kleinster MB $\geq$ 20 % for CH_4, smallest meas. range $\geq$ 20 % pour CH_4, étendue min. $\geq$ 20 %
7 *)	Empfängerkammer Detector Cellule de détection	C79451–A3468–B537	für C_2H_4 for C_2H_4 pour C_2H_4
7 *)	Empfängerkammer Detector Cellule de détection	C79451–A3468–B522	für NO (Kanal 1) for NO (channel 1) pour NO (canal 1)
7 *)	Empfängerkammer Detector Cellule de détection	C79451–A3468–B523	für SO_2 (Kanal 2) for SO_2 (channel 2) pour SO_2 (canal 2)
7 *)	Empfängerkammer Detector Cellule de détection	C79451–A3468–B581	für N_2O for N_2O pour N_2O
7 *)	Empfängerkammer Detector Cellule de détection	C79451–A3468–B539	für SF_6 for SF_6 pour SF_6
7 *)	Empfängerkammer Detector Cellule de détection	C79451–A3468–B538	für C_6H_{14} for C_6H_{14} pour C_6H_{14}

*) Nach dem Austausch werden spezielle Arbeiten notwendig, die nur von qualifiziertem, geschultem Fachpersonal durchgeführt werden können wie z. B. Temperaturkompensation, elektrischer Grundabgleich etc.

Following replacement, special work is required which can only be carried out by qualified and trained personnel, for example temperature compensation, basic electronic adjustment etc.

Des travaux particuliers comme p. ex. la compensation de température, le réglage de base électrique etc., ne pouvant être exécutés que par du personnel qualifié sont à effectuer après un remplacement de pièces.

Appendix 8

8.1	Returned Deliveries	8-2
8.2	Explanations	8-5
8.2.1	Abbreviations	8-5
8.2.2	Explanation of Symbols	8-5
8.3	Software Release Versions	8-6
8.4	Certificates	8-11

8.1 Returned Deliveries

The gas analyzer or spare parts should be returned in the original packing material. If the original packing material is no longer available, wrap the analyzer in plastic foil and pack in a sufficiently large box lined with padding material (wood shavings or similar). When using wood shavings, the stuffing should be at least 15 cm thick on all sides.

When shipping overseas, the analyzers must be additionally sealed air-tight in a 0.2 mm thick polyethylene foil with the addition of a drying agent (e.g. silica gel). In addition, the transport container should be lined internally with a layer of union paper.

Please photocopy the form printed overleaf, fill in, and enclose with the returned device.

In the case of a guarantee claim, please enclose your guarantee card.

Addresses for Returned Deliveries

Technical support

- For technical support, please contact our service helpline:
  Tel.: + 33 3 88 90 66 77
  Fax: + 33 3 88 90 66 88

Spare parts service

Please send your orders for spare parts to the following address:
- SIEMENS CSC (Centre Service Client)
  Tel.: + 33 3 88 90 66 77
  Fax: + 33 3 88 90 66 88
  1, chemin de la Sandlach
  F-67506 Haguenau

Repairs

To enable fast detection and elimination of faults, please return the analyzers to the following address:
- SIEMENS CSC (Centre Service Client)
  Hr. Criquy
  Tel.: +33 3 88 90 55 35
  Fax: +33 3 88 90 66 88
  1, chemin de la Sandlach
  F-67506 Haguenau

Returned deliveries form

( ) Repair **( ) Guarantee**

Name of customer	
Address	
Person responsible	
Delivery address	
Telephone Fax e-Mail	
Address for returned delivery (if different from above)	
Customer (original) Order No.	
Siemens (original) Order confirmation No.	
Device name	
MLFB No.	
Serial No.	
Designation of returned part	
Fault description	
Process data at point of measurement	
Operating temperature	
Operating pressure	
Composition of sample gas	
Duration of use/ date put into service	

Repair report			
RH No.:	Incoming date:	Outgoing date:	Technician:

Do not fill in this block; for internal use

Your comments please

8.2 Explanations

8.2.1 Abbreviations

Table 8-1 List of abbreviations used

Abbreviation	Meaning
ADC	Voltage on the analog-to-digital converter (A/D converter)
AR	Autorange
AUTOCAL	Automatic calibration of analyzer
CAL	Calibration
CAL-Gas	Calibration gas
ELAN	Economical Local Area Network
ERR	Faulty operation of analyzer
IR	Infrared
LEL	lower explosion limit
LCD	Liquid Crystal Display
MEAS	Measure
MR	Measuring range
MV	Measured value
NAM	NAMUR **N**ormen**A**rbeitsgemeinschaft für **M**ess- **U**nd **R**egelungstechnik in der chemischen Industrie (standards committee for measuring and control technology in the chemical industry)
PUMP	Pump on/off
R	Relay or computer mode (remote)
SV	Span (calibration) gas valve
Sync	Synchronization (with other devices in the system)
V-ADCt	
ZV	Zero gas valve

8.2.2 Explanation of Symbols

To avoid danger to the life or health of users or service engineers, and to avoid damage to property, certain sections of text in this Manual are identified by warning symbols (pictograms).

General indication of danger
It is essential to observe the operating instructions

8.3 Software Release Versions

This Manual refers to the software release version 2.11 (see Section 5.7.4). The most important modifications are listed below.

If analyzers are to be upgraded to the software version 2.11._, please observe the listed measures.

Table 8-2 Measures for upgrading to version 2.11

Software version	Manufac-turing period starting	Most important innovations	Measures for upgrading to version 2.11: Replace ROM package C79451-A3494-S501 and ...
0.24 ... 0.94	Up to approx. 12/96	• Functionality completed (pre-production analyzers)	• **Only possible in service center!** Replace ROM package (flash PROM) C79451-A3494-S501, GAL • New temperature adjustment necessary
1.0	1/97	• Complete functionality with German dialogs	
1.1	1/97	• Internal correction	
1.2	2/97	• Complete functionality with German dialogs	
1.3	2/97	• Internal corrections	
1.4	2/97	• Complete functionality with German, English, French, Spanish Italian dialogs	
1.5	3/97	• Signalling "Function control" introduced • Analyzer status displays: "Function control" instead of "Maintenance" (see Section 5.2)	
1.6	6/97	• Error correction in display "O_2 cal after install date" (see Section 5.8.2.1) • In dialog "Parameters: Time constants" T90 instead of Tau (T63) (see Section 5.9.3) • Company name "SIEMENS" removed • Internal corrections	• Check time constant

Table 8-2 Measures for upgrading to version 2.11, continued

Software version	Manufac-turing period starting	Most important innovations	Measures for upgrading to version 2.11: Replace ROM package C79451-A3494-S501 and ...
2.0._	11/97	• Variable chopper frequency (factory setting) • Language selection introduced (see Section 5.10.2.1) • Error eliminated: With AUTOCAL time = 0 h, analyzer remains in warm-up mode • Response of analog current output with function control can now be parameterized (see Section 5.10.1.1) • The dialogs "Analyzer status: factory settings hardware" and "Analyzer status: factory settings software" revised • In dialog "Analyzer status: Diagnostic values: O_2 diagnostic values", the sensor voltage is displayed in mV • Error eliminated: relay signalling measuring range 1/2 • Maintenance switch omitted. Instead signalling "Function control" if the analyzer is uncoded (see Fig. Fig. 5-2) • Limits with fixed hysteresis of 2 % of measuring range (see Section 5.9.2) • Display of current measuring ranges in "Analyzer status: Diagnostic values: IR diagnostic values: Not corrected conc." (see Section 5.7.2.1)	• Check corresponding parameters
2.01_	3/98	• Error correction: texts in menu "O2 zero calibration" in English, French, Spanish, Italian	

Table 8-2 Measures for upgrading to version 2.11, continued

Software version	Manufac-turing period starting	Most important innovations	Measures for upgrading to version 2.11: Replace ROM package C79451-A3494-S501 and ...
2.02_	5/98	• The automatic determination of the synchronous rectifier phase has been improved (error message "Phase not found")	
2.03_	9/98	• RS485 interface (ELAN) completed	• Check ELAN parameters
2.04_	11/98	• Error correction: sporadic measured-value spikes with ambient temperatures > 40 °C.	
2.05_	3/99	• Error correction: display of parameters following acknowledgment of "Accept modifications" by NO not always updated.	

Table 8-2 Measures for upgrading to version 2.11, continued

Software version	Manufac-turing period starting	Most important innovations	Measures for upgrading to version 2.11: Replace ROM package C79451-A3494-S501 and ...
2.06_	2/00	• The option module "PROFIBUS-DP" or "-PA" including 8 additional relay outputs and 8 binary inputs is supported. • Error correction: measured values at analog output are not always stored during faults if the measured value changes range. • Set LCD contrast to basic state: press the three arrow keys simultaneously. • The command "Remote" via the RS485 interface (ELAN) results in signalling of "Function check" to identify an intervention on the analyzer. • The number of digits following the decimal point (resolution) dependent on the measuring range has been optimized. • The factory status can be generated again by using the function "Load factory data". • The current status is now always displayed in the menu "IR source ON/OFF". • Pressure sensor can measure up to 600 mbar without error message (previously 700 mbar).	• Set PROFIBUS address. Parameterization of additional relay outputs and binary inputs. • No factory data are stored in the analyzer when upgrading from versions <= 2.05.

Table 8-2 Measures for upgrading to version 2.11, continued

Software version	Manufac-turing period starting	Most important innovations	Measures for upgrading to version 2.11: Replace ROM package C79451-A3494-S501 and ...
2.07_	7/00	• Extension of communication via RS485/ELAN • Saving/reloading factory data in/from EEPROM.	
2.08_	8/00	• Internal correction	
2.09_	12/00	• Larger range of adjustment for LCD contrast	
2.10_	06/02	• Lockin (signal recording) improved • Chopper control modified • ON/OFF functions • Flow switch	
2.11_	12/03	• Parameter set transfer via ELAN supplemented • Detection of phase jumps with very high concentration values without triggering of an error message	

8.4 Certificates

TÜV Test certificate BB-EG1 - KAR Gr01 X for measurement of flammable gases

TÜV
SÜDDEUTSCHLAND

Test Certificate
BB-EG1- KAR Gr01X

Containment System of
Gas analyser Type ULTRAMAT 23

Bau und Betrieb

Region Baden-Württemberg
Niederlassung Karlsruhe

TÜV Bayern Hessen
Sachsen Südwest e.V.

Durmersheimer Str. 145
D-76189 Karlsruhe
Phone (07 21) 57 06-2 51
Telefax (07 21) 57 06-2 89
www.tuev-sued.de

Karlsruhe, September 15, 2003
BB-EG1-KAR/Greß
Test Certificate ULTRAMAT 23

This document consists of
2 pages

Certificate Holder	Siemens AG A&D PI 2 CA D-76181 Karlsruhe Germany
Test unit	Gas analyser ULTRAMAT 23 Manufacturer Siemens
Test Basis	EN 50016 and EN 60079 -14 (current revisions); ExRL; Guidelines for explosion protection of BG Chemie (BGR 104)
Scope of the Test	Evalution of the tightness of the containment system without external purging in non explosive areas
Documents	- Technical Description of the ULTRAMAT 23; - leakage test of the containment system; - calculations; - technical manual; - Decay of He and CO_2 concentration in the housing with no moving ambient air
Date of examination	August 27, 2003
Test Results	see page 2

Certified

K.-D. Greß

Technische Überwachung
TÜ SW
Bezirk SW

TÜV

TÜV SÜDDEUTSCHLAND

1. Results

1.1 Containment System

The following gases or gas mixtures are allowed to be measured with the containment system (gas path) of ULTRAMAT 23:

- non flammable gas/air mixtures or
- flammable gas/air mixtures but the gas concentration is always below the lower explosion limit (LEL) or
- gas mixtures according to definition of zone 2 (rarely flammable gas mixtures) or
- gas mixtures according to definition of zone 1 (occasionally flammable gas mixtures).

1.2 Purging of housing

The 19" rack housing of the ULTRAMAT 23 does not need to be purged as

- the released amount of gases from the containment can be regarded as limited and
- the gas exchange rate of the housing is sufficiently high enough, so that
- any enrichment of the released gases above the LEL is not possible.

2. Special conditions

Connection of flammable gases or gas mixtures above the LEL is only allowed when the containment system of the analyser is equipped with pipes.

Connection of occasionally flammable gas mixtures is only allowed when a flame barrier is used.

Maximum temperature class for the analyser type ULTRAMAT 23 is T4.

If the 19" rack housing is mounted in a rack a sufficient air exchange with the ambient must be guaranteed.

For closed cabinets sufficient purging with protective gas is absolutely necessary. Flow rate depends on free internal volume of the cabinet and has to be choosen in accordance with the requirements of BGR 104 or other respective international standards.

To guarantee continuous tightness of the containment system a leakage test must be performed regularly according to the specifications in the manual. The user is responsible for the frequency of this test; however, potentially negative effects of the sample gases to the containment system must be taken into account.

3. Other

Detailed explanations to this test report and certificate BB-EG1/KAR Gr01X are available on request.

Karlsruhe, September 15, 2003

BB-EG1-KAR/Greß

TÜV

C79000-B5276-C216

C79000-B5276-C216-02

Siemens Aktiengesellschaft

Automation and Drives
Process Instrumentation and Analytics
76181 KARLSRUHE
GERMANY

www.siemens.com/processanalytics

Series 4000 Capsuhelic® Differential Pressure Gage

Specifications - Installation and Operating Instructions

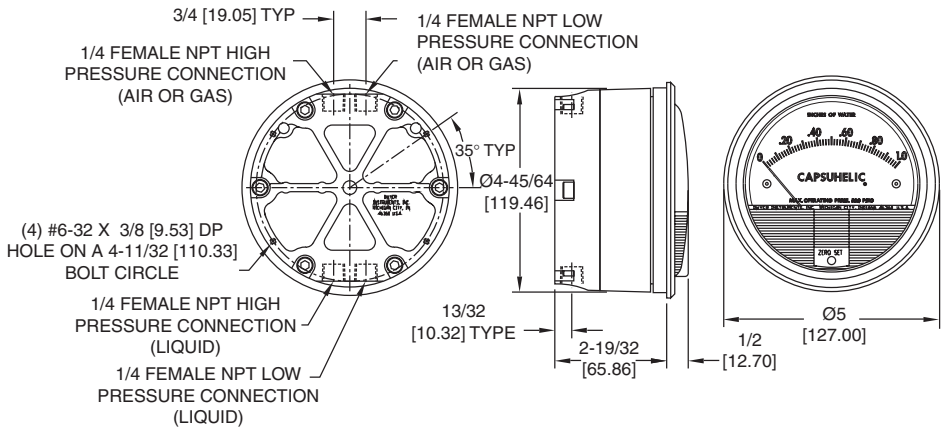

CAUTION: Use of a line filter (Dwyer model A-391 or equivalent) is recommended to prevent entry of liquid borne particles into gage. Dwyer Instruments cannot assume responsibility for failure of gages due to clogging of internal passages.

NOTE: DO NOT use with hydrogen gas. Toxic and/or explosive gas may form due to reaction with rare earth magnet.

CAPSUHELIC® INSTALLATION

1. Select a location free from excessive vibration and where the ambient temperature will not exceed 200°F. Sensing lines may be run any necessary distance. For example, 250 foot lines will not affect accuracy but will damp the reading slightly. Do not restrict lines. If pulsating pressures or vibration cause excessive pointer oscillation, consult factory for means of providing additional damping.

2. All standard models are calibrated for use with the diaphragm and scale in a vertical position. Special factory calibration is necessary for operation in an inclined or horizontal position. The exceptions are ranges under 5 in. w.c., (or metric equivalents) which can only be calibrated for vertical operation.

SPECIFICATIONS

Service: Aluminum Case: Air and compatible gases and oil based liquids. Brass Case: Air and compatible gases and water based liquids.
Wetted Materials: Consult factory.
Housing: Die cast aluminum with impregnated hard coating, standard. Optional forged brass housing is required for water or water based fluids. Special material diaphragms available, contact factory.
Accuracy: ±3% of full scale at 70°F (21.1°C). (±2% on 4000S models, ±4% on 4200, 4210, 4215, 4220, 4300, 4400, and 4500).
Pressure Limits: -20″ Hg to 500 psig. (-0.677 bar to 34.4 bar).
Temperature Limits: 20 to 200°F. (-6.67 to 93.3°C).
Size: 4″ (101.6 mm) diameter dial face.
Mounting Orientation: Diaphragm in vertical position. Consult factory for other position orientations.
Process Connections: 1/4″ female NPT high and low pressure taps, duplicated -one pair top for air and gas, and one pair bottom for liquids.
Weight: 3 lb, 3 oz (1.45 kg) aluminum case; 7 lb, 13 oz (3.54 kg) brass case.
Standard Accessories: Two 1/4″ NPT plugs for duplicate pressure taps, four flush mounting adapters with screws and four surface mounting screws.

DWYER INSTRUMENTS, INC.
P.O. Box 373 • Michigan City, IN 46361, U.S.A.
Phone: 219/879-8000 www.dwyer-inst.com
Fax: 219/872-9057 e-mail: info@dwyer-inst.com

3. Surface Mounting

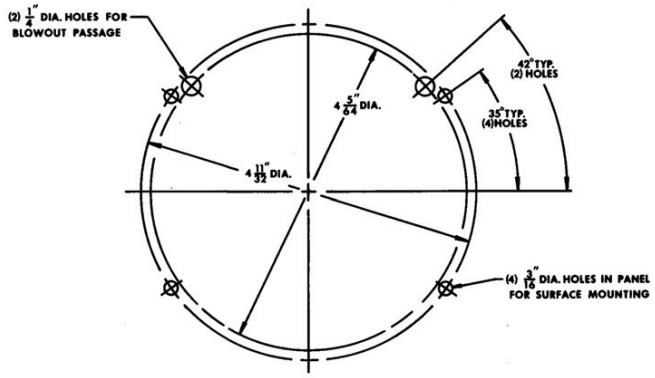

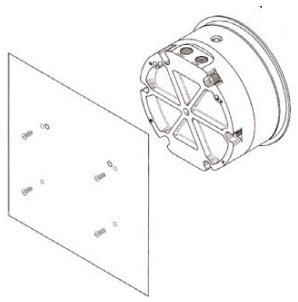

Locate 4 mounting holes, 35° from horizontal centerline on a 4-11/32″ dia. circle. Use No. 6-32 machine screws of appropriate length. Be sure to drill 1/4″ holes for blowout protection as shown in the diagram.

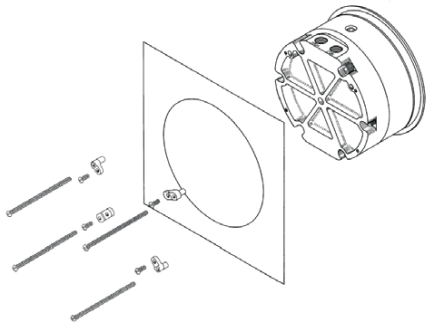

4. Flush Mounting
Provide a 4-13/16″ dia. opening in panel. Insert gage and secure in place with No. 6-32 machine screws of appropriate length, with mounting lugs firmly secured in place.

5. To zero the gage after Installation
Set the indicating pointer exactly on the zero mark, using the external zero adjust screw on the cover at the bottom. Note that the zero check or adjustment can only be made with the high and low pressure taps both open to atmosphere.

CAUTION
Note location of blowout or vent holes in the surface mounting diagram. Do not block these holes as their function is to vent overpressure failure out the back of the gage rather than blowing off the front cover.

Important Notes:
Two pairs of high and low pressure taps are provided, one pair on the top and a duplicate pair on the bottom. These fittings may be utilized according to the type of service for which the gage will be used. For gas or vapor service the gage should be connected from the pressure source to the top pressure fittings so that any accumulation of condensate may be drained or bled out the bottom fittings. For liquid service the pressure source should bee connected to the bottom taps so that any trapped gas may be vented out the top fittings. Optional bleed fittings may be obtained to replace the standard 1/4 NPT plugs for installations requiring frequent draining or venting of the gage. Note that the unused pair of pressure taps must be plugged in order for the gage to operate. For straight pressure or vacuum applications where only one of a pair of high and low pressure taps are being utilized, the other tap must be open to atmosphere.

For portable use or temporary installation use 1/4 male NPT to male flare fitting and connect to pressure source with high pressure hose or tubing will flare nut connectors.
For permanent installation 1/4″ OD copper or stainless steel tubing is recommended.

Proper installation of fittings and plugs is important. Sparingly apply pipe thread sealant to threads. Excessive amounts can fall into pressure passages and cause blockage. we recommend Loctite® 69-31 Hydraulic Sealant. Install using torque wrench. Tighten only to 20 ft/lbs. Overtightening can damage case.

CAPSUHELIC® MAINTENANCE
Note: Capsuhelic® differential pressure gages are high precision instruments assembled and calibrated in a modern factory. If trained instrument mechanics are not available, we recommend that any instruments requiring repair be returned to the factory.

1. No lubrication or periodic servicing is required. If the interior is protected from dust, dirt, corrosive gases and fluids, years of trouble free service may be expected.

2. For service requiring a high degree of continued accuracy, periodic calibration checks are recommended. Send back to the factory for re-calibration.

©Copyright 2003 Dwyer Instruments, Inc.
Printed in U.S.A. 10/03 FR# 440306-00 Rev. 10

DWYER INSTRUMENTS, INC.
P.O. Box 373 • Michigan City, IN 46361, U.S.A.
Phone: 219/879-8000 **www.dwyer-inst.com**
Fax: 219/872-9057 **e-mail: info@dwyer-inst.com**

GCS-TI-301

Since 1953

We're There.

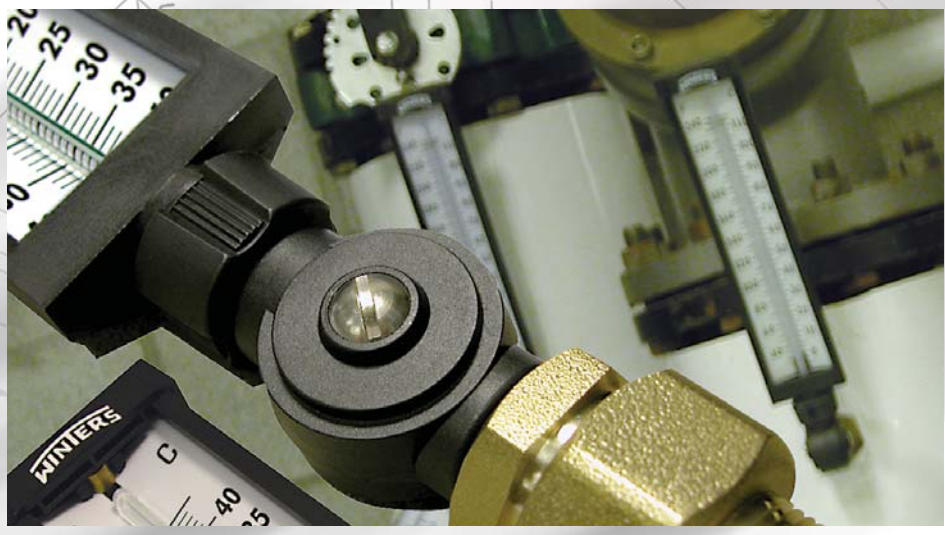

THERMOMETER INSTALLATION, OPERATION AND MAINTENANCE

www.winters.com

WINTERS INSTRUMENTS
MANUFACTURER OF INDUSTRIAL INSTRUMENTATION

Bi-Metal Thermometers

Winters' bi-metal thermometers are direct sensing instruments that are hermetically sealed and thus completely waterproof and dustproof. For accurate temperature readings, the stem should be immersed past the groove on the lower portion of the stem. All bi-metallic thermometers are of 304 stainless steel construction to protect against corrosive conditions. An external adjustment screw is conveniently located on the bottom of each case for easy field recalibration of thermometers, which may have shifted out of accuracy.

Installation of Bi-Metal Thermometers

Location

Vibration and extreme ambient temperatures can affect the dial reading. These areas should be avoided as much as possible. Vibration effects can be minimized by the use of a dampening liquid such as glycerin or silicone. If vibration is extreme, then a Remote Reading Filled Thermometer should be considered.

Mounting

A suitable thread sealant is required for NPT threads such as pipe dope or Teflon® tape. Never use any part of the thermometer other than the hex nut that is on the stem of the thermometer just above the NPT threads for installation. Always tighten with a wrench on the hex nut. Failure to do so will severely damage the thermometer. Typically, bi-metal thermometers are connected to the process through a thermowell. This allows for the removal and testing, calibration or replacement of the instrument without affecting the process operations. The selection of thermowell material and stem lengths is critical in order to properly monitor the temperature of the process.

Operation and Maintenance of Bi-Metal Thermometers

Disassembly and Assembly / Spare Parts

It is not recommended to disassemble the thermometer for any reason. If the thermometer is not functioning properly or if the lens is broken, the thermometer should be replaced. Please contact Winters for this.

Inspection Frequency

These thermometers are ruggedly constructed to give a reliable process temperature reading. The frequency of inspection is dependent on how critical the reading is at that point in the process. The inspection frequency can range from monthly to annual basis.

Over Range Protection

Over range protection allows the thermometer to function within its designed parameters even when the media temperature may intermittently exceed the thermometer range. The over range protection is 50% for ranges up to 500°F (260°C) and 10% above ranges of 500°F (260°C).

Recalibration

A master thermometer with a high degree of accuracy should be used for calibration. Immerse the bi-metal thermometer along side the master thermometer into an agitated liquid for at least three minutes and compare temperature readout. Note that both thermometers must be immersed at the same level. An external adjustment screw is conveniently located on the bottom of the case for easy field calibration. Winters can recalibrate and provide test certification. Please contact us for more details.

Storage

Store in a dry area at ambient temperatures not exceeding the indicator range. For example, if the indicator range is 0°C to 300°C, then the storage temperature should not exceed 300°C.

Teflon® is a registered trademark of DuPont Corporation

Head Rotation

NOTE: The bi-metal thermometer head can be rotated as illustrated only when in back connection position. Never rotate the thermometer head when it is in the angled position.

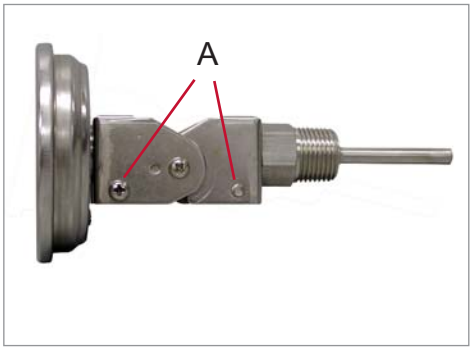

To rotate thermometer head up to 360°, make certain thermometer is in back connected position. Loosen two screws on both sides (A) until harness revolves freely.

Now hold thermometer head and adjustable harness and rotate head to desired position. Retighten screws (A).

Angle Positioning

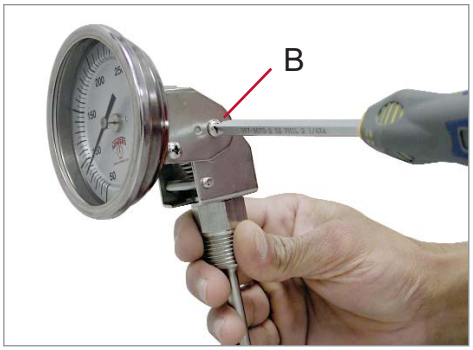

To tilt thermometer head up to a 90° angle or straighten it, loosen single screw (B) by ½ turn only.

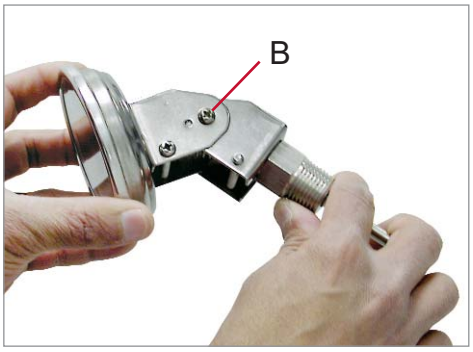

Tilt to desired angle or straighten. Retighten screw (B).

A Pentair Company

Electric Heaters
Elektrisches Heizgerät
Réchauffeur Élétrique
Eléctrico Calentador

© 2003 Hoffman Enclosures Inc.
P/N 28359001 87565511

English

INTRODUCTION

1. Before installing the electric heater, read these instructions carefully. Failure to follow these instructions could damage the product or cause a hazardous condition.

2. Check the ratings on the heater label to assure the product is suitable for your application.

⚠ WARNING

To avoid electric shock and equipment damage, disconnect any power supplies to the enclosure before installing the electric heater.

GENERAL SAFETY INFORMATION

1. Protect the lead wires from coming in contact with sharp objects, hot surfaces, and/or chemicals.

2. If continuous operation of the heater is essential to the safe functioning of any other equipment, adequate warning devices must be installed to assure safe operation at all times.

⚠ CAUTION

These electric heaters are not designed for use in dusty, dirty, corrosive, or hazardous locations.

Portions of the heater can get hot. Adequate protection must be taken to protect people from potential burns, and to protect other components from this heat.

This heater can only be installed in a totally enclosed metal enclosure.

© 2003 Hoffman Enclosures Inc.

English

LOCATION AND MOUNTING

1. Hoffman electric heaters should be centered as low as possible in the enclosure for optimum heat distribution.

2. It is recommended that the heater be installed on a panel for optimum performance. It may, however, be mounted on any metal surface.

3. The heater should be mounted in a vertical position with the terminal block at the bottom and the air outlet openings at the top as shown.

4. Heaters should not be installed on wood or other combustible surfaces.

5. Heat sensitive components should not be placed above the heater discharge area.

6. The recommended clearances shown by the shadowed area indicate the space that should be kept free of components for safe operation of the heater.

7. Four 10-32 UNF, self-tapping screws are included for installation.

Vertical Surface Mounting

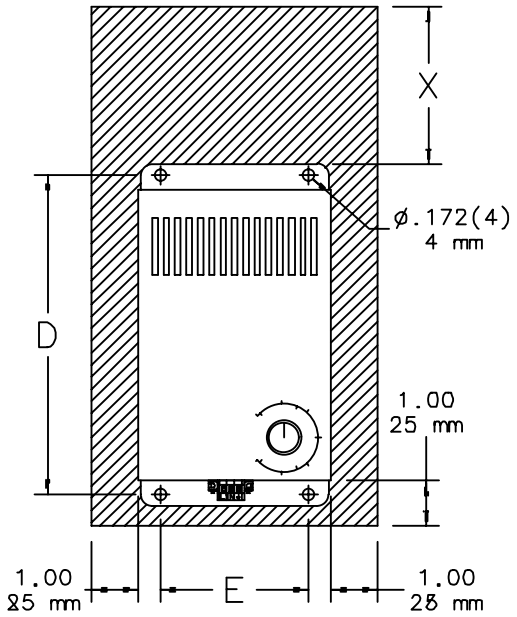

⚠ CAUTION

Thermal sensitive devices or materials may need to be located further from the heater than the minimum recommended distance.

Optional Horizontal Surface Mounting

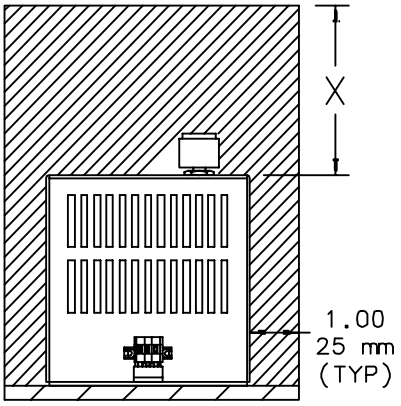

	Watts	X	D	E
D-AH1001A D-AH1002A	100	4	5.00 127 mm	3.25 83 mm
D-AH2001A D-AH2002A	200	6		
D-AH4001B D-AH4002B	400	6	7.00 178 mm	3.50 89 mm
D-AH8001B D-AH80002B	800	8		

Temperature Rise Vs Distance Above Heater

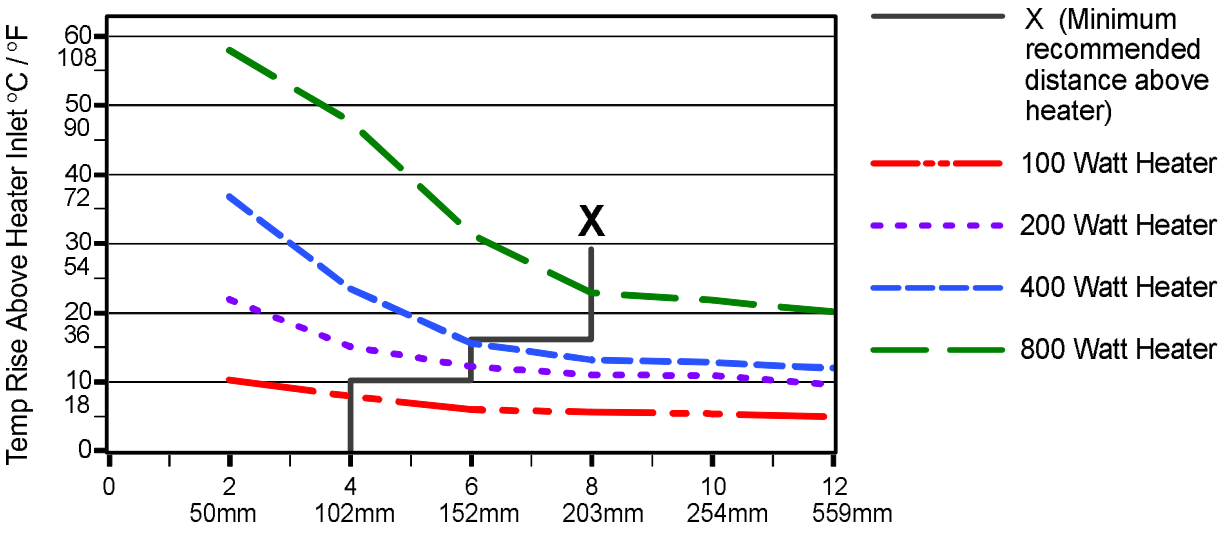

Vertical Distance Above Heater, inches/mm

Temperature measurements reflect unrestricted air flow.

© 2003 Hoffman Enclosures Inc.

English

WIRING (Reference Page 14)

1. All wiring must comply with applicable local codes and ordinances.
2. Connect the heater leadwires to the proper A.C. power source. Power source for 800 watt heaters should be continuous.
3. The heater must be properly grounded.

NOTE: Exposed wires should not come in contact with the heater housing.

MAINTENANCE

1. Always disconnect power supply before inspecting or working on the heater.

2. Generally the unit requires no maintenance since the fan bearings are permanently lubricated and sealed.

⚠ WARNING

To avoid electric shock, do not energize any circuits before all internal and external electrical and mechanical clearances are checked to assure that all assembled equipment functions safely and properly.

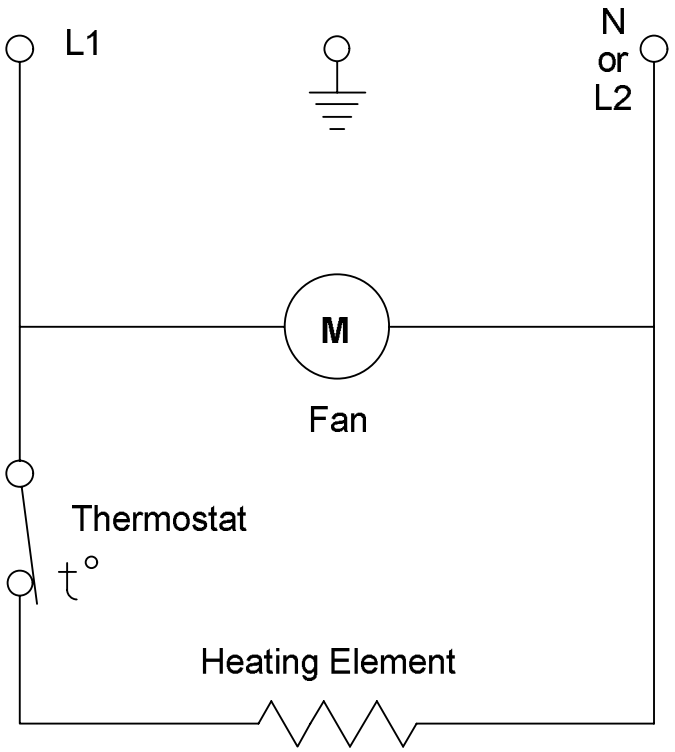

Wiring Schematic

© 2003 Hoffman Enclosures Inc.

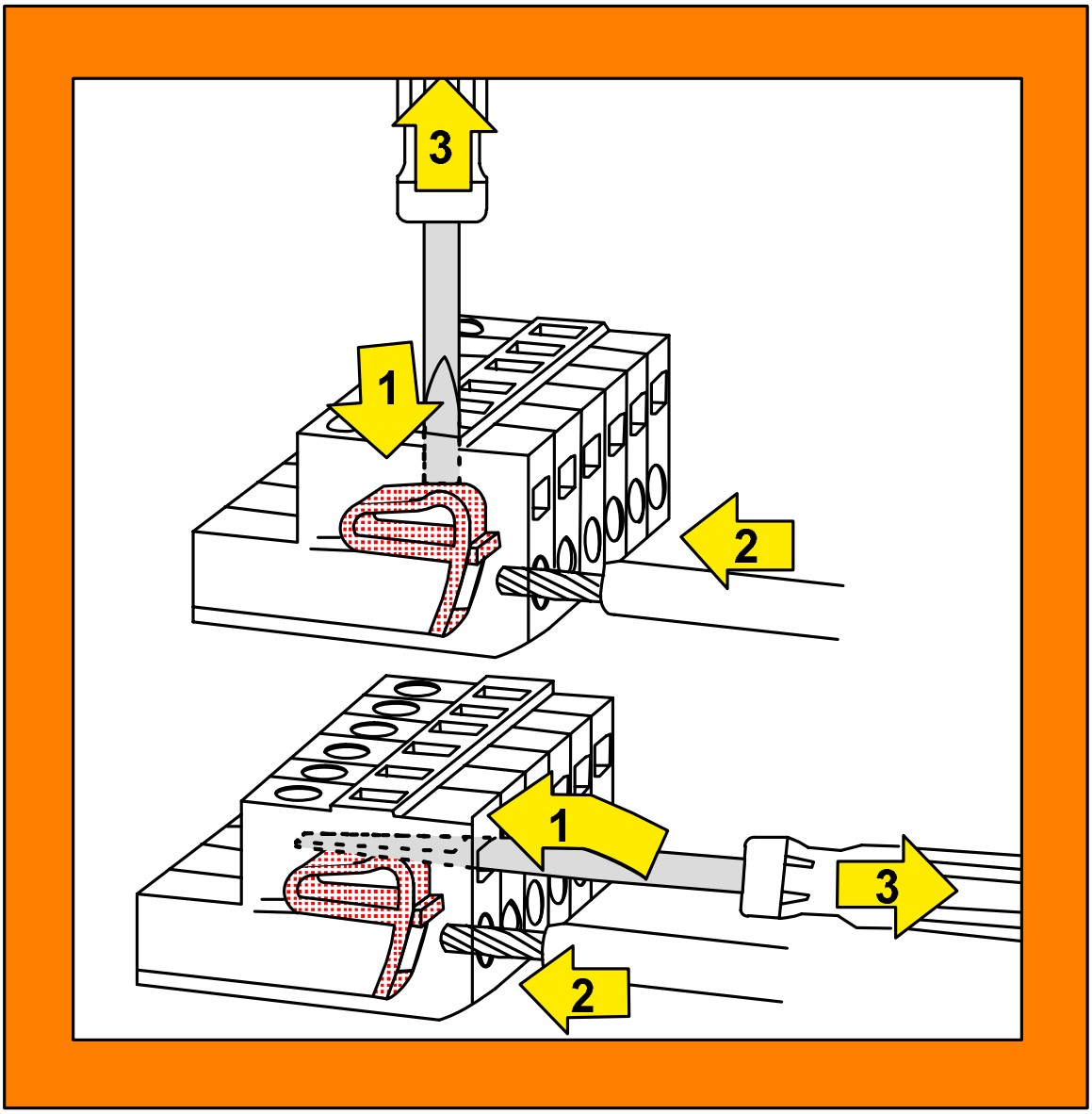

Wiring Illustration
Verdrahtung Abbildung
Illustration d'enfilement
Ilustración Del Cableado

© 2003 Hoffman Enclosures Inc.

© 2003 Hoffman Enclosures Inc.

A Pentair Company

Hoffman Enclosures Inc.
2100 Hoffman Way
Anoka, MN 55303–1745
(763) 422–2211
www.hoffmanonline.com

Pentair Electronic Packaging
170 Commerce Drive
Warwick, RI 02886
(401) 732–3770
www.pentair–ep.com

Mexico
Pentair Enclosures, S. de R.L. de C.V.
Federico T. de la Chica No. 8 Piso 4 A
Circuito Comercial Plaza Satélite
Ciudad Satélite,
Naucalpan, México C.P. 53100
011–52–55–5393–8263

Canada
Hoffman–Schroff
111 Grangeway Avenue, Suite 504
Scarborough, Ontario M1H 3E9
(416) 289–2770
1–800–668–2500 (Canada only)

Germany
Schroff GmbH
Langenalber Str. 96–100
75334 Straubenhardt
49 (07082) 794–0 www.schroff.de

Great Britain
Schroff UK Ltd.
Maylands Avenue
Hemel Hempstead, Herts HP2 7DE
44 (01442) 240471 www.schroff.co.uk

Sweden
Schroff Scandinavia AB
Box 2003
12821 Skarpnäck
46 08683 61 00 www.schroff.se

France
Schroff Sas
Z.I., 4 rue du Marais
67660 Betschdorf
33 03 88 90 64 90 www.schroff.fr

Italy
Schroff srl
Viale Milano, 119
21013 Gallarate (Varese)
39 0331 79 40 03

Singapore
Hoffman–Schroff Pte. Ltd.
#01–68/71 German Centre
25 International Business Park
Singapore 609916
65 5 62–78 90

Japan
Schroff K.K.
Nisso No. 13 Bldg. 4F
2–5–1 Shinyokohama
Kohoku–Ku, Yokohama shi
Kanagawa 222–0033
81 (045) 476–02 81

Finland
Schroff Scandinavia AB
Peräsimentie 8
03100 Nummela
358 09 222 68 00

Norway
Schroff Scandinavia AB
Bjoernerudveien 24
1266 Oslo
47 022 76 33 60

© 2003 Hoffman Enclosures Inc.

Heat Exchanger Specification Sheet

1	Company:														
2	Location:														
3	Service of Unit:			Our Reference:											
4	Item No.:			Your Reference:											
5	Date: 7/19/10		Rev No.: 1		Job No.:145351										
6	Size	C200	8 /	36 in	Type	BEM	Hor Connected in		1	parallel	1	series			
7	Surf/unit(eff.)	19	ft2	Shells/unit	1		Surf/shell (eff.)		19	ft2					
8	PERFORMANCE OF ONE UNIT														
9	Fluid allocation						Shell Side		Tube Side						
10	Fluid name						Cold Landfill gas		Hot Landfill gas						
11	Fluid quantity, Total					lb/h	2373		2373						
12	Vapor (In/Out)					lb/h	2373	2373	2373	2373					
13	Liquid					lb/h	0	0	0	0					
14	Noncondensable					lb/h	0		0						
15															
16	Temperature (In/Out)					F	98	104	211	205.42					
17	Dew / Bubble point					F									
18	Density (Vap / Liq)					lb/ft3	0.081 /	0.078 /	0.072 /	0.072 /					
19	Viscosity					cp	0.0137 /	0.0139 /	0.016 /	0.0159 /					
20	Molecular wt, Vap						23.51	23.51	23.51	23.51					
21	Molecular wt, NC														
22	Specific heat					BTU/(lb*F)	0.3732 /	0.3746 /	0.4028 /	0.4013 /					
23	Thermal conductivity					BTU/(ft*h*F)	0.018 /	0.018 /	0.022 /	0.022 /					
24	Latent heat					BTU/lb									
25	Pressure					psi	20.69	20.025	21.94	21.833					
26	Velocity					ft/s	133.08		79.74						
27	Pressure drop, allow./calc.					psi	2.069	0.665	2.194	0.107					
28	Fouling resist. (min)					ft2*h*F/BTU	0.001		0.0011						
29	Heat exchanged		5324	BTU/h					MTD corrected	107.21	F				
30	Transfer rate, Service		2.61		Dirty	12.07		Clean	12.39	BTU/(h*ft2*F)					
31	CONSTRUCTION OF ONE SHELL								Sketch						
32					Shell Side		Tube Side								
33	Design/Test pressure				psi		75 / Code		75 / Code						
34	Design temperature				F		300		300						
35	Number passes per shell						1		1						
36	Corrosion allowance				in		0		0						
37	Connections		In		in		6 / 150 ANSI		6 / 150 ANSI						
38	Size/rating		Out				6 / 150 ANSI		6 / 150 ANSI						
39	Nominal		Intermediate				/		/						
40	Tube No.	26	OD	1	Tks- Avg	0.049	in	Length	3	ft	Pitch	1.25	in		
41	Tube type	Plain			Material		SS 304L				Tube pattern	30			
42	Shell	SS 304L		ID	8.329	OD	8.625	in	Shell cover		-				
43	Channel or bonnet			SS 304L					Channel cover		-				
44	Tubesheet-stationary			SS 304L					Tubesheet-floating		-				
45	Floating head cover			-					Impingement protection		None				
46	Baffle-crossing		SS 304L		Type			Cut(%d)		Spacing: c/c			in		
47	Baffle-long		-			Seal type					Inlet		in		
48	Supports-tube					U-bend			Type						
49	Bypass seal						Tube-tubesheet joint			Exp.					
50	Expansion joint		-			Type									
51	RhoV2-Inlet nozzle		133	Bundle entrance		75			Bundle exit	78	lb/(ft*s				
52	Gaskets - Shell side					Tube Side		CF							
53	Floating head		-												
54	Code requirements		ASME Code Sec VIII Div 1					TEMA class			C - general service				
55	Weight/Shell		425.8		Filled with water		538				Bundle 87.8		lb		
56	Remarks	Customer to confirm properties and conditions.													
57															
58															

AXH air-coolers

MAIN MENU – TABLE OF CONTENTS

Customer: Perennial Energy, Inc.	AXH Job: 108301
Ref: 231624	Model: 48VVF
Tag: 1641	End User: Buncombe County

- Installation and Operation Manual

Drawings
  - As-Built G/A Certified Drawing

- Parts List

- Cooler Specification (Data) Sheet

Q.A. Documentation
  - U-1A Data Reports
  - Nameplate Scans
  - Inspection Checklists
  - Dye Penetrate/Magnetic Particle Test Reports
  - Hydrostatic Test Certification Reports

Standard Component Information
  - Louvers / Shutters
  - Fans
  - Electric Motor with Data Sheets

- Photos at Completion and Shipment

- Literature - AXH Brochure

TA□LE O□ CONTENTS

□ENERAL □In□rod□c□ion and O□era□ion 2

E□UIPMENT DELI□ERY AND SITIN□ 2

UNLOADIN□ □ □ANDLIN□ 3

PRIOR TO RUN□IN □ START UP 4
- *HYDROSTATIC TEST* 4
- *BEARINGS* 4
  - *LUBRICATION GUIDE* 4
- *FANS* 4
- *LOUVERS/SHUTTERS* 5
- *V-BELTS* 5
- *GEAR BOX* 5
- *VIBRATION SWITCH* 5
- *PROCESS START UP* 5
- *HEADER ACCESS PLUGS* 5

LON□ TERM MAINTENANCE 6
- *FIN CLEANING* 6
- *TUBE CLEANING* 6
- *LEAKING TUBES* 6

INSTALLATION O□ TAPER TU□E SEALIN□ PINS 7

INSPECTION 8

RECOMMENDED SPARE PARTS 8

WARRANTY 9

AXH air-coolers

401 East Lowry Road, Claremore, Oklahoma 74017
(918) 283-9200 Fax (918) 283-9229
www.axh.com

INTRODUCTION

This manual has been prepared for the purpose of providing general information and recommendations for the operation and maintenance of your air-cooled heat exchanger in order to insure that it will continue to provide you maximum performance in future years under a variety of operating conditions.

Normal maintenance items and light repairs as outlined can be achieved with basic mechanics tools. These include adjusting v-belt tension, checking and adjusting fan blade pitch angle, lubrication of bearings, setting of vibration switches and the periodic cleaning of fin tubes, both externally and internally. For more specific and detailed information please refer to the individual manufacturer's maintenance instructions for the specific item or component in questions (i.e. motors, fans, bearings, and controls). The Table of Contents indicates the appropriate section where this information is contained.

Naturally, prudent judgment should always be exercised when repairing, replacing or particularly modifying any original parts to make certain that they are equivalent to the original design. ***A air cooler*** stocks most standard parts and components and are available within a 24 hour emergency basis if necessary.

RECEIPT OF EQUIPMENT & SITING

Upon arrival at site, the cooler should be inspected thoroughly by receiving personnel. Damage in transit could be the result of dropping or being struck by heavy objects or equipment. Observe the sub-skid, flanges, plenum side panels and coil sections for any apparent physical damage. Dents, bent flanges, crushed fins, damaged controls are among other items that should be described on the bill of lading document and presented by the carrier. Prompt reporting will expedite filing of claims and will expedite resolution and compensation from the responsible party.

Installation of the cooler(s) is the responsibility of the purchaser or contractor who must insure that the cooler intake areas are free from obstructions and provide adequate airflow. Spacing of air coolers should be adequate to avoid hot air re-circulation (and the affects of other coolers). The impact of grouping coolers closely together may be compensated for by either elevating and/or separating them.

The cooler is normally completely shop assembled and no field assembly at the job-site is required. However, occasionally optional or special accessories may require disassembly to meet transportation height or width limitations. In the event some assembly of the unit is required, the appropriate assembly instructions will accompany the shipment. The packing list should be checked carefully to see that all parts shipped with the cooler are on hand. These parts may be shipped separately, secured to the skid base (if so designed) or inside the plenum area.

UNLOADING & HANDLING COOLERS

Spreader bars should be used for lifting when the cooler width is over eight (8) feet. The cooler is normally supplied with multiple lifting points to be used for off loading from carrier. Lifting by any other point may cause damage to the cooler. Following are some recommended ways of lifting. Please refer to the illustration below that resembles the type of ***A air cooler*** cooler to be handled and use it as a guide on how to unload and handle the cooler properly. (See unit name plate for unit type i.e. EF, VI, FF, ZF, etc.)

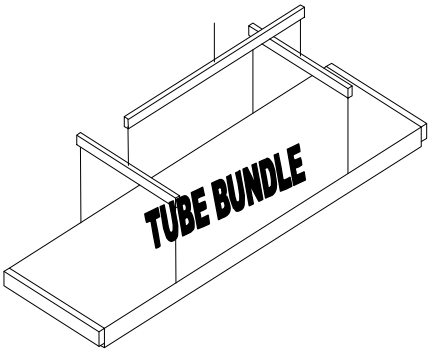

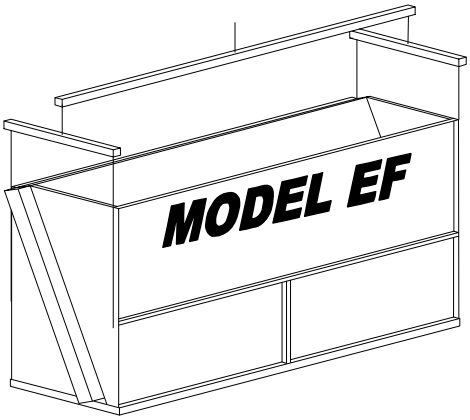

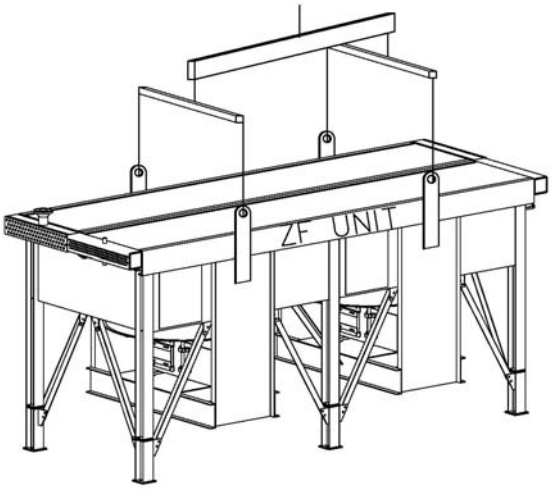

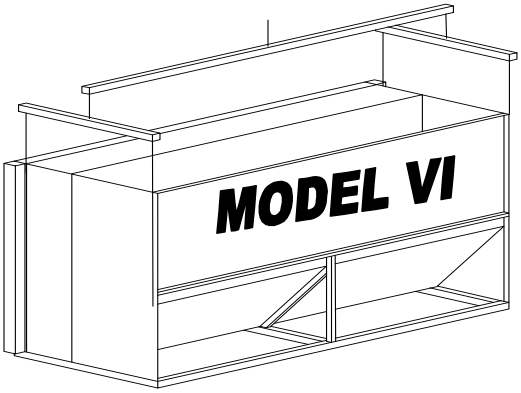

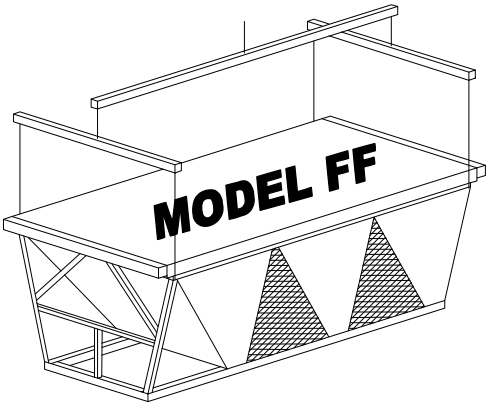

PRIOR TO RUN-IN & START UP

HYDROSTATIC TEST

A air cooler tube bundles (sections) are hydrostatically tested to 1.3 times the design pressure as required by ASME before being released for shipment. To ensure that no damage has been done during shipment and/or installation, it is good practice to hydro test the entire system, including piping, heat exchangers, pumps, etc., prior to start up.

BEARINGS

Check bearings for lubrication. **Caution: DO NOT OVER GREASE**. The manufacturer has greased the bearings and no additional grease is necessary at start up. Remote lubrication lines, when provided, should be loosened at the bearing end, and checked to be sure they are filled with grease from the fitting end. This will ensure that the lube lines are full of grease and free of air and any debris. During high-speed operation too much grease will cause over-heating. When dust and water are present bearings should contain as much grease as the operating speed will permit since a full bearing with very slight leakage is the best protection against the entrance of foreign material. Under normal conditions refer to the following table as a general guideline, although certain conditions may require a change of lubrication periods other than those described. Bearing mounting bolts and set screws should be checked for tightness. See bearing manufacturer recommended lubrication chart for recommended maintenance schedule and type of grease.

FANS

Check fan blade bolts and hub bushing set screws for tightness. Rotate fan by hand to insure that shaft, speed reducer, and driver turn freely. The fan blades should be checked for adequate tip clearance and blade pitch angle. To measure this, first move all blades past a fixed point on the inside of the fan ring and observe which blade has the least amount of clearance at that point. Then move the blade selected 360 degrees to the point of minimum clearance. Refer to the section on fans. If the fan is found not to be centered in the fan ring, slight adjustment of the tip clearance can be made by loosening the fan shaft bearing bolts and moving the complete fan and fan shaft assembly until it is centered in the fan ring. To check the fan blade angle, use a level bubble protractor (this can be obtained from ***A air cooler***). Loosen the nuts on the bolts and place the protractor on the angle setting mark or the clevis. Refer to fan manufactures information for proper location and air-x-hemphill parts list for design angle. Using a mallet, tap on the shank end of the blade to adjust the angle. Tighten fan blade bolts to the proper torque (refer to manufactures maintenance instructions) making sure to tighten evenly. Recheck blade angle. Occasionally coolers may be equipped with an auto-variable type fan. These fans have blade angles controlled by varying the air supply pressure. Air pressure should be applied to the fan before starting to check for proper operation. **Before starting, any electric motor should be "bumped" to check for proper direction of fan rotation and air flow. This will also insure that the motor is in proper working order.**

LOUVERS/SHUTTERS

Check all mounting brackets and bolts for tightness. To insure that the linkage is adjusted properly on manually operated louvers, operate blades from a fully open to a fully closed position. On automatic louvers with air motors (optional) air should be applied to actuator to check for proper linkage adjustment, free operation, and sufficient air supply. For further information on air motors see attached manufacture maintenance instructions.

CAUTION: DO NOT WALK ON LOUVERS OR USE THEM AS A LADDER

V-BELT DRIVES

Check V-Belt tension in accordance with V-Belt tensioning section of this manual.

GEAR BOX

When supplied, check gearbox for oil. Gears are shipped without oil and must be filled and serviced in accordance with the instructions contained later in this operating manual.

VIBRATION SWITCH (OPTIONAL)

For Murphy switches, after the switch has been installed, adjust it by turning the adjustment screw in a clockwise direction until the starting torque does not trip the vibration switch. For other brands see the specific manufacture's information.

PROCESS START-UP

The process start-up should be conducted in a manner that will minimize thermal shock of the tube bundles. Over cooling of fluids during periods of low ambient temperature and/or low heat load duty should also be avoided, especially during start up.

HEADER ACCESS PLUGS

Header plugs opposite each tube are installed at room temperature. To correct any minor leaking, it may be necessary to tighten the plugs when the bundle is at operating temperature. WARNING: DO NOT tighten plugs while bundle is under pressure. If any plugs are removed, the soft iron gasket (shoulder plugs only) should always be replaced. Replacement gaskets are in stock and may be ordered from ***A air cooler***. When installing the plugs, a thread lubricant and/or anti-galling compound should be used.

LONG TERM MAINTENANCE

FIN CLEANING

Fins should be kept free of dirt and lint. Bug and lint screens are an available option that will greatly assist in keeping tube bundles clean. Fin tubes can be cleaned by directing compressed air perpendicular to the tubes in a direction OPPOSITE to the normal airflow. Caution should be when using steam or chemicals to clean fins. DO NOT clean or spray water when the section/bundle is hot.

TUBE CLEANING

The internal cleaning of tubes can be done in several different ways:

1. **Mechanical Cleaning -** This consists of using a drill, (or wire brushes), on long rods, and rotating them with air or electric motors. This is normally followed by a treated water or chemical wash or air purge.

2. **Chemical Cleaning** - This consists of circulating chemical solutions through the tubes. The solution should contain inhibitors to avoid corrosion of the tube walls.

3. **High Pressure Water Sprays** - This consists of placing a high-pressure water jet head at the end of hollow rods and pushing through the individual tubes.

NOTE: The last two processes will not work on tubes that have been “plugged” with sealing pins.

LEAKING TUBES

Tube leaks are generally of two types: 1) leaks through the tube wall itself, and more commonly 2) leaks in the tube end attachment in the header (tube sheet). In the first case it is desirable to plug both ends of the tube. Only a limited number of tubes can be sealed off in this manner before performance is adversely affected and will vary with each specific application. When cooling performance falls below acceptable limits, the tube bundle may be re-tubed. If leaks develop in the tube end attachment at the tube sheet, re-rolling of the tube may be necessary. Care must be taken in selecting the proper tube expander for the tube size (diameter) and gauge of tube to be rolled. When rolling a tube, excess or “over-rolling” must be avoided. Consult the factory for further information on taper sealing pins to plug the tubes and tube roller sizes.

INSTRUCTIONS FOR USING TAPER PINS FOR SEALING TUBES

1.) Remove header access plug from one end of leaking tube (do not switch plugs in holes) and replace with new gaskets whenever possible.
2.) Insert taper sealing pin through plug hole into tube and tap lightly with hammer until seated firmly, but not too tight to be removed.
3.) Measure plug to determine the depth it was originally screwed into header plug sheet. (Dimension A)
4.) Measure the distance that the taper pin protrudes from the header plug sheet in “seated” position. (Dimension B)
3.) Add the distance measured in Steps 3 and 4 and subtract 1/8". This will be the length which should be cut off the large end of the taper sealing pin. (A+B-1/8” = Dimension C)
4.) Remove the taper pin from the end of the tube.
5.) Cut the end off the large end of the taper pin to the length calculated in Step 5. CAUTION: Do not cut the pin too short.
6.) Re-insert the taper sealing pin in the tube and drive securely into place.
7.) Lubricate the access plug and replace it in plug sheet and run in tightly. The plug should now seat tightly and hold taper pin in place.
8.) Repeat operation on other end of tube.
9.) Hydro-test section to insure proper pressure seal without leaks.

NOTE: If the access plug that was removed does not seal properly, replace it along with the gasket if it is a shoulder type plug.

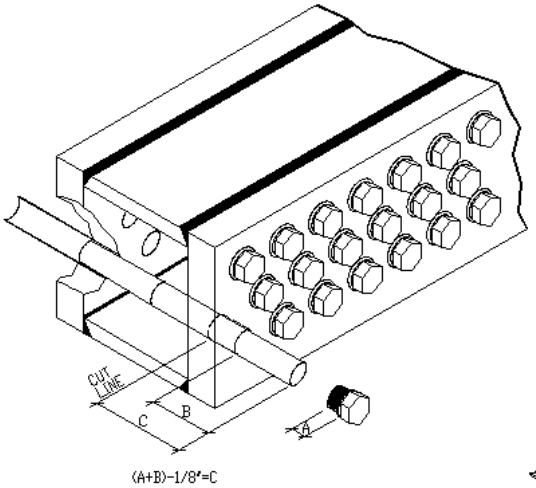

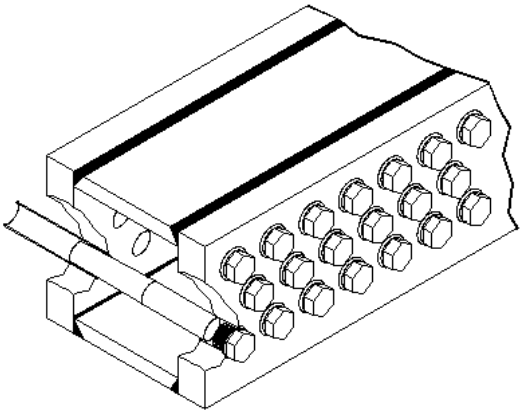

INSPECTION

TUBES

Tubes should be inspected for internal and external corrosion and/or erosion periodically. This depends on the severity and type of service and atmosphere that the tubes are operating in. Inspection of the tubes should be performed every six months to one year intervals. Tube wall thickness can be checked externally using an ultrasonic technique.

FANS

Fans should be inspected for wear or loose bolts (cracks, pitting and corrosion) on all surfaces. These inspections should be performed every six months. In addition to surface inspections, all bolts and nuts must be checked for proper torque. (See the fan section of the manual).

BEARINGS

In addition to checking bearings as recommended by the manufacture, the mounting bolts should be checked for proper torque and alignment. These checks should be done at least every six months.

STRUCTURE

A general inspection of the structure should be performed every six months to a year. This inspection should include checks for corrosion, damaged members, sheeting guards and for loose bolts.

HEADERS

Headers should be inspected for corrosion periodically. This corrosion should not be allowed to proceed past the stated corrosion allowance as stated on the individual job specification data sheet.

RECOMMENDED SPARE PARTS

We suggest that one each of the parts that are identified as recommended spare parts on the Table of Contents page, be kept in stock or be readily available. The down time caused by waiting for delivery of a replacement part may cost far more in lost production or service than the cost of the item itself.

Spare parts orders should be specified in accordance with the parts list description and always include the corresponding *A*□□ *air*□*cooler*□□model and job number.

WARRANTY

A□□ air□cooler□ warrants that the equipment it *manufactures* is free of defects in material and workmanship, when operated in accordance with conditions stated, for a period of one (1) year after start-up not to exceed fifteen (15) months from shipment. Such warranty shall not apply to any equipment that has been altered or repaired by other than the Company's personnel. The Company's obligation under this warranty is limited, however, to repairing or, if in the Company's judgment it seems more appropriate, to furnishing without charge, F.O.B. the Company's factory, a similar part to replace any part which after examination shall, to its own satisfaction be determined to have been defective at the time it was shipped. This warranty applies only if the Company received an immediate written notice upon discovery of such defect. The Company makes no warranties covering deterioration or failure due to corrosion, erosion or fouling or due to improper installation or operation. EXCEPT AS SPECIFICALLY STATED ABOVE, AXH AIR-COOLERS HEREBY DISCLAIMS ANY AND ALL WARRANTIES, EXPRESS OR IMPLIED, WHETHER OF MERCHANTABILITY, FITNESS FOR A PARTICULAR PURPOSE, OR OTHERWISE.

LIMITATION O□ LIA□ILITY

The remedies set forth herein are exclusive. AXH air-coolers shall not be liable, in excess of the purchase price of the equipment, for any damages, whether in contract, in tort or on any other basis, sustained by the customer or any other person arising from or related to the delivery, use or failure of the equipment or for any delay, special, incidental, consequential, indirect or commercial damages whether due to lost profits or otherwise resulting from the delivery, use or failure of the equipment. If it is ever necessary to contact our plant for service or replacement parts, it is essential that our job number and other identifying data be obtained from the metal nameplate attached to the cooler, or the nameplate attached to the tube bundle header box, which also contains the design pressure, temperature, and serial number.

AXH air-coolers
401 East Lowry Road, Claremore, Oklahoma 74017
(918) 283-9200 Fax (918) 283-9229
www.axh.com

ITEM	SERVICE	MAWP	CODE	NOZZLES		COUPLINGS	REFERENCE DIMENSIONS		LOUVERS	BUG SCREEN	DRIVE	FAN	FINISH
				INLET	OUTLET	TEMP	B	C					
1	AC	100 PSI @ 300/-20°F	ASME	6-150 RFWN	6-150 RFWN	(2) 1-6000#	N/A	N/A	MANUAL	NONE	DIRECT DRIVE BY 3 HP, 900 RPM, 3 P, 60 HZ, 460V, TEFC, VFD MOTOR (CSA)	48"ø MULTI-WING 6WL PAG 4-BLADE, 21° PITCH ANGLE LEFT HAND ROTATION 870 RPM @ 2.3 H.P. REQ'D ø1.625 BORE WITH .375 x .1875 KWY.	STRUCTURE STD PRIMER W/ WARM GRAY ENAMEL TOP COAT FAN GUARD GALVANIZED

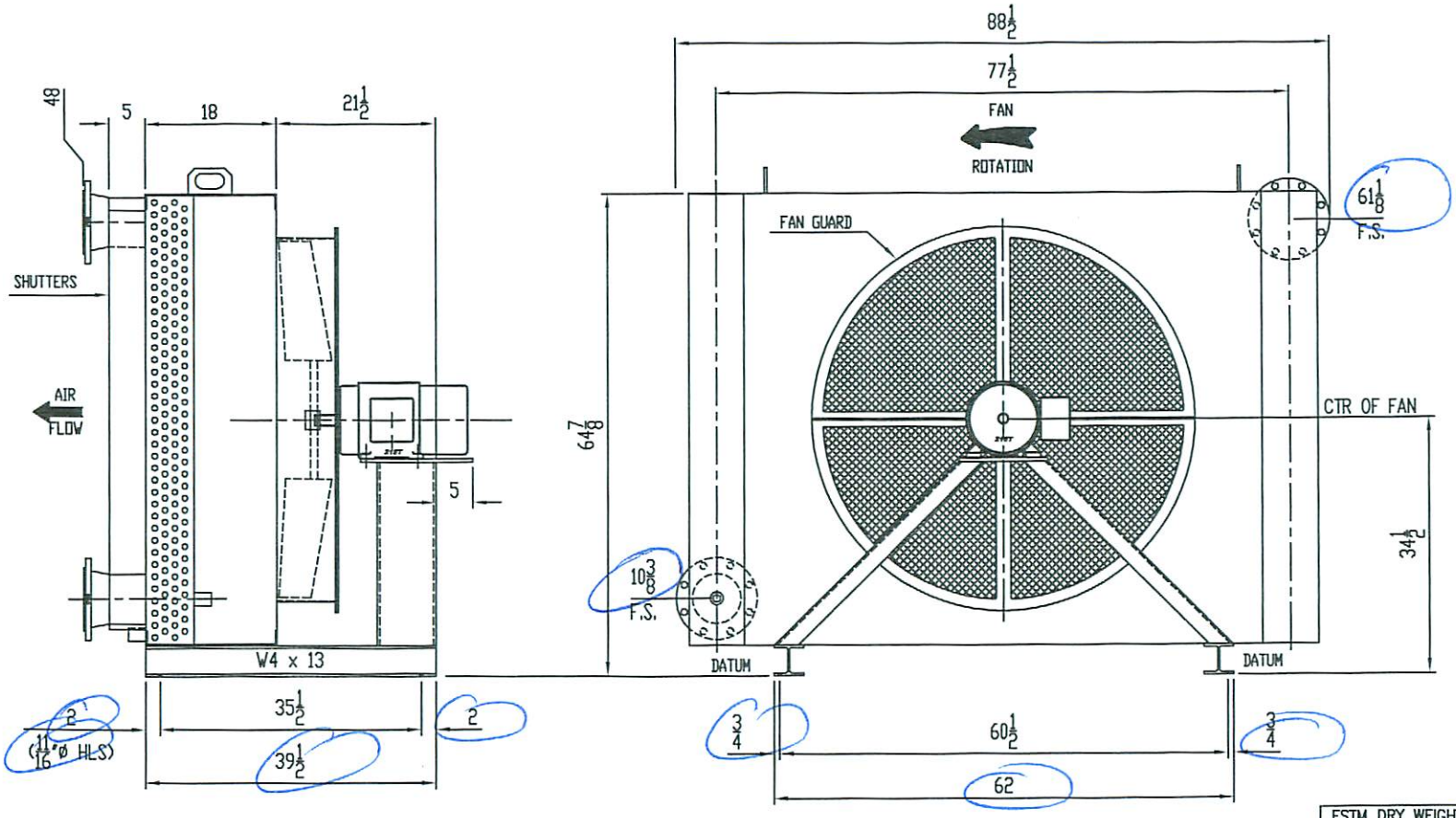

ESTM DRY WEIGHT = 2,100#

RELEASED
FABRICATION OF THIS ORDER HAS BEGUN

REV	REVISION DESCRIPTION	BY	CK	APP	DATE

FOR: PERENNIAL ENERGY
P.O. NO: 231624
CUST. TAG #: 1641
USER: BUNCOMBE COUNTY
JOBSITE: ASHEVILLE, NC
JOB NO: 108301
WORK ORDER NO: –
DR: RG DATE: 8/5/10
CK: MIKE DATE: 8/5/10
APPD: DATE:

AXH air-coolers

CERTIFIED DRAWING
MODEL 48WF QTY. 1
CERTIFIED DATE: 8/5/10
DRAWING NUMBER 108301-CRT
SCALE: FULL
REV 0

3-18-11

AXH air-coolers
401 E. Lowry Road, Claremore, Oklahoma 74017
(918) 283-9200 Fax (918) 283- 9229
www.axh.com

Job number: 108301A
Customer: PERENNIAL ENERGY
Quantity: 1.00
Model: 48-VV

Parts List

Note: Quantity Shown is for One Unit Only

Revision	Engineer	Date	Description
0	DW	08/31/2010	Initiated Parts List

	QUANTITY	DESCRIPTION OF PARTS		
**	1.00	Electric-Motor	EA	Item for Attatched Notes

Make: TECO Westinghouse
Model: E0038
Horsepower: 3
RPM: 900
V/P/HZ: 460/3/60
Frame: 215T
Enclosure: TEFC
Shaft: Horizontal
Mounting: F-1
Special Notes: Single winding, variable torque, VFD compatable.

	1.00	LOUVERS	EA

Manual over the AC section

**	1.00	FAN	EA

Make: Multi Wing
Model: 48/4-8/21/PAG/6WR/Taper Lok/1.375/AR
Diameter: 48"
No. Blades: 4
Rotation: Right Hand
Angle: 21
Bore: 1-3/8"
Keyway: 5/16"

** = RECOMMENDED SPARE PART

AXH air-coolers air-x-limited	401 E. Lowry Road Claremore, OK 74017 info@axh.com	Phone (918) 283-9200 Fax (918) 283-9229 www.axh.com	**Proposal / Job No.** 108301B *Date* 8/30/2010 *Page* 1 OF 1

1	*Purchaser*	PERENNIAL ENERGY			*Ultimate User*	BUNCOMBE COUNTY	
2	*Inquiry / PO#*	PO 231624			*Destination*	ASHEVILLE, NC	
3	*# Units*	1	*Model*	48VVF	*Reference*	LANDFILL GAS COOLER	
4	*Assembly*	PACKAGED	*Draft*	FORCED	*Overall Size (WxL), Ft*		*Est Wt* 2,250 LBS

THERMAL & MECHANICAL DESIGN

5	***Service***	AC*
6	*Flow*	.72MMSCFD
7	*Fluid*	1.04SPGR
8	*Temp. In / Out, °F*	210.0 / 98.0
9	*Pressure, PSI*	20.2 PSIA
10	*Pressure Drop, PSI*	.6
11	*Heat Load, BTU/HR*	98611
12	*True LMTD*	38.3
13	*Overall Rate, U*	15.8
14	*Fouling Factor*	.0020
15	*Surface, Tube / Total, Sq Ft*	165 / 2456
16	***Section, □***	(1)
17	*Design Temp, °F Max / Min*	300 / -20
18	*MWP / Test Press, PSIG*	100 / 138
19	*Pass Arrangement*	CROSSFLOW
20	*# Tube Rows*	4
21	*# Tube Passes*	3
22	***Tube, OD □ □W□***	3/4X18
23	*Material*	A249TP304SS
24	*# Per Section / Length, Ft*	146 / 6
25	*Turbulators*	
26	*Accelerators*	
27	***□in□, Type***	HI-EFF
28	*Material*	AL
29	***Nozzle, Rating □Type***	150RF
30	*Material*	SA182F304
31	*#-Inlets / Size In*	(1) 6
32	*#-Oulets / Size In*	(1) 6
33	***□eader□, Type***	BOX
34	*Material*	SA240-304
35	*Corrosion Allow, In*	
36	*Grooved Tubesheet*	DBL
37	*Plugs, Type*	SHOULDER
38	*Plugs Material*	316SS
39	*PWHT*	
40	*ASME Code & Nat'l Board*	YES
41	*CRN*	
42	***Add'l Sec□ □ O□ion□***	
43	*API*	
44	*Louvers / Hail Screen*	MAN /
45	***Inspection □NDT***	

□□□ 100% X-Ray of all header seam, attachment & nozzle butt welds. ***S□□*** *Spot X-Ray of 1 long seam & 1 end closure, per header*
□□□ 100% X-Ray of all nozzle butt welds. ***UT □*** *100% UT of all header seam, attachment & nozzle butt welds. □ = Hardness testing.*

	AIR-SIDE PERFORMANCE		FAN DATA		DRIVER DATA	STRUCTURAL	
46	*Ambient Air Temp, In °F*	90	*Fan(s)*	(1) MULTI-WING 6W	*Type*	*Guards*	FAN / DRIVE
47	*Elevation, Ft*	2020	*Blade Material*	PAG	DIRECT DRIVE BY (1) 3HP,		
48	*Air Flow, SCFM*	13,942	*HP / Fan*	2.3	900RPM, 460/60/3, TEFC, VFD		
49	*Outlet Air Temp, °F*	96.5	*Dia, In / # Blades*	48 / 4	COMP. MOTOR		
50	*Min Air Temp, °F*	-20	*RPM*	870			
51			*Tipspeed, FPM*	10932			
52	***E□. Noise Data□***	83 dBA @ 1m, 58 dBA @ 15m	*Pitch, Deg*	21			

53 ***Additional Info.***
54 * - AC SERVICE INCLUDES 15#/HR WATER CONDENSING
55
56
57
58

FORM U-1A MANUFACTURER'S DATA REPORT FOR PRESSURE VESSELS

(ALTERNATIVE FORM FOR SINGLE CHAMBER, COMPLETELY SHOP OR FIELD FABRICATED VESSELS ONLY)

AS REQUIRED BY THE PROVISIONS OF THE ASME CODE RULES, SECTION VIII, DIVISION 1

1. Manufactured and certified by : AXH air-coolers, LLC - 401 EAST LOWRY ROAD - CLAREMORE, OKLAHOMA 74017 (Name and address of manufacturer)

2. Manufactured for: PERENNIAL ENERGY,INC. 1375 COUNTY ROAD 8690, WEST PLAINS, MISSOURI 65775

3. Location of installation: UNKNOWN (Name and address)

4. Type HORZ. H. EXCHANGER (Horiz. Or vert., tank) | 108301.1 (Mfgr's serial No.) | NONE (CRN) | 108301 AC R0 (Drawing No.) | 17167 (Nat'l Bd. No.) | 2011 (Year built)

CODE. The design, construction and workmanship conform to ASME Rules, Section VIII, Division 1. 2010 EDITION (Year)

to: NO ADDENDA (Addenda (Date)) | - (Code Case Nos) | - (Special Service per UG-120 (d))

6. Shell: TUBE/PLUG: SA-240-304SS (Mat'l (Spec. No., Grade)) | FR & BK 7/8" (Nom. Thk. (in.)) | N/A (Corr. Allow. (in.)) | FR & BK 0' 6 3/4" (Inner diameter) | 5' 0 3/4" (Length (overall))

7. Seams: CORNER JOINT [Long. (welded, dbl. Sngl., Lap, Butt)] | N/A (R.T. (Spot or Full)) | 1.0 (Eff. (%)) | N/A (H.T. Temp. (F)) | N/A (Time (hr.)) | - (Girth (Welded, Dbl., Sngl., Lap, Butt)) | - (R.T. (Spot, Partial, of Full)) | - (Eff. (%)) | *2 (No. of Courses)

8. Heads: (a) Material WRAPPERS: SA-240-304SS (Spec. No., Grade) (b) Material ENDS: SA-240-304SS (Spec. No., Grade)

	Location (Top, Bottom, Ends)	Minimum Thickness	Corrosion Allowance	Crown Radius	Knuckle Radius	Elliptical Ratio	Conical Apex Angle	Hemispherical Radius	Flat Diameter	Side to Pressure (Convex or Concave)
a	WRAPPERS	3/8'	N/A	-	-	-	-	-	**	FLAT
b	ENDS	3/8'	N/A	-	-	-	-	-	***	FLAT

If removable, bolts used (describe other fastenings) (Matial Spec. No., Gr., Size, No.)

9. MAWP 100 psi. (Internal) | N/A (External) | at max. temp 300 °F (Internal) | N/A (External)

Min. design metal temp. -20 °F at 100 psi. Hydro., ~~pneu. Or comb.~~ test pressure 138 psi.

Proof Test NONE

10. Nozzles, inspection, and safety valve openings:

Purpose (Inlet,Outlet,Drain)	No.	Diam or Size	Type	Material	Nom. Thk.	Reinforcement Material	How Attached	Location (Header)
INLET/OUTLET	2	6'-150#	PIPE / RFWN	****	S/80	NONE	UW-16(a)	HEADER
INSTRUMENT	2	1"	CPLG	SA-182-304	6000#	NONE	UW-16(a)	HEADER
PLUGS	292	7/8'-14	UNF	SA-479-316	-	-	-	HEADER

11. Supports: Skirts NO (Yes or no) LUGS N/A (No.) LEGS N/A (No.) OTHER STRUCTURE (Describe) Attached: BOLTED (Where and How)

12. Remarks: Manufacturer's Partial Data Reports properly identified and signed by Commissioned Inspectors have been furnished for the following items of the report: (Name of part, item number, Mfgr's. name, and identifying stamp)

*2 HEADERS, ONE AT EACH END. **WRAPPERS FLAT DIA. 5 3/4" X 5' 3/4" ***ENDS FLAT DIA. 5 3/4" X 6" ****SA-312-304 SMLS / SA-182-304

146 TUBES SA-249 -304 3/4" O.D. X .0441 MW 6' 0"

IMPACTS EXEMPT PER UHA-51(d) PRESSURE RELIEF DEVICE BY OTHERS. CONSTRUCTED IN ACCORDANCE WITH APPENDIX 28.

CERTIFICATE OF SHOP / FIELD COMPLIANCE

We certify that the statements made in this report are correct and that all details of design, material, construction, and workmanship of this vessel conform to the ASME BOILER AND PRESSURE VESSEL CODE, Section V111, Division 1. "U"Certificate of Authorization No. 34, 950 expires 02/07/2014

Date: 3-22-11 Co. name: AXH air-coolers, LLC. (Manufacturer) Signed [signature] (Representative)

CERTIFICATE OF SHOP / FIELD INSPECTION

Vessel constructed by AXH air-coolers LLC. at 401 E. LOWRY ROAD - CLAREMORE, OKLAHOMA 74017

I, the undersigned, holding a valid commission issued by the National Board of Boiler and Pressure Vessel Inspectors and/or the State or Province of OKLAHOMA and employed by SENECA INSURANCE COMPANY OF TEXAS

have inspected the component described in this Manufacturer's Data Report on 3-17-11 and state that, to the best of my knowledge and belief, the Manufacturer has constructed this pressure vessel in accordance with ASME Code, Section VIII, Division 1. By signing this certificate neither the Inspector nor his employer makes any warranty, expressed or implied, concerning the pressure vessel described in this Manufacturer's Data Report. Furthermore, neither the inspector nor his employer shall be liable in any manner for any personal injury or property damage or a loss of any kind arising from or connected with this inspection.

Date: 3-22-11 Signed: [signature] (Authorized Inspector) Commissions NB12461A OK883 (Nat'l Board (incl. endorsements,) State, Prov. and No.)

NB 17167

U

W

CERTIFIED BY **AXH air-coolers, LLC**

CLAREMORE, OKLAHOMA

AC

MAX. ALLOWABLE WORKING PRESSURE 100 PSI @ 300 °F

MIN. DESIGN METAL TEMP. -20 °F @ 100 PSI

SER. NO. 108301.1 CRN. -

YEAR 2011 HYDRO. 138 PSIG SERVICE

ax

AXH AIR COOLERS QC CERTIFIED

RA
3-2-11

FINAL IN PROCESS

INSPECTION CHECKLIST

AXH air-coolers

CUSTOMER:	JOB / MODEL NUMBER:	UNIT:	DATE:
PERENNIAL ENERGY	108301 / 48VVF		2/17/2011

ASSEMBLY	CHECK	Q.C.		CUST.			ASSEMBLY	CHECK	Q.C.		CUST.	
FLANGE ARRANGEMENT AND FACING	BC 3-18-11	RB 3-18	X				~~MANUAL~~ AND/OR AIR MOTORS	JL 3-18-11	RB 3-18	X		
RUST PREVENTION OF NOZZLES / HEADERS	JL 3-18-11	RB 3-18	X				SHUTTERS OPERATE CORRECTLY	JL 3-18-11	RB 3-18	X		
RUST PREVENTION OF SHAFTS	JL 3-18-11	RB 3-18	X				CUT IN PAINT	RB 3-14-11	RB 3-14	X		
DIMENSIONAL INSPECTION OF SUB COLUMNS							FINAL FINISH AVG. MIL. 5	RB 3-18-11	RB 3-18	X		
DIMENSIONAL INSPECTION OF BASE HOLES	BC 3-18-11	RB 3-18	X				GALVANIZED PARTS CLEAN GALVANIZING	JL 3-18-11	RB 3-18	X		
FAN BLADE CLEARANCE & TORQUEING OF FAN/SHAFT	JL 3-18-11	RB 3-18	X				HAIL GUARD, ~~FAN GUARD~~ AND/OR BUG SCREENS	JL 3-18-11	RB 3-18	X		
FAN BLADE PITCH 21° CHECKED ~~Fixed Pitch~~	JL 3-18-11	RB 3-18	X				UNIT NAME PLATE INSP. AND ATTACHMENT	JL 3-18-11	RB 3-18	X		
CPLG, BUSHING, AND BEARING SECURED	JL 3-18-11	RB 3-18	X				PARTS SHIPPING LOOSE		N/A	X		
BEARINGS AND/OR UNIVERSAL GREASED		N/A	X									
IDLER ALIGNMENT												
ELECTIC MOTOR	JL 3-18-11	RB 3-18	X									
LIFTING LUG ATTACHMENT	BC 3-18-11	RB 3-18	X				**QUALITY CONTROL**	**CHECK**	**Q.C.**		**CUST.**	
							VIBRATION SWITCH					
							RUN TEST AND/OR VIBRATION CHECK	Ok'd 3-18	RB 3-18	X		

Q.C. REVIEW: RB 3-22-11

Q.C. RELEASE FOR SHIPMENT: RB 3-18-11

COMMENTS: Pictures taken of Shutters RB 3-18-11

AXH air-coolers

REPORT OF NONDESTRUCTIVE TESTING
LIQUID PENETRANT EXAMINATION RECORD

REFERENCE STANDARD: ASME SECT.V, ASME SECT. VIII DIV.1, APPENDIX 8
AXH AIR-COOLERS STANDARD MS-21.0 REVISION: 0

EXAMINATION EQUIPMENT & METHOD

LIQUID PENETRANT TYPE: DUBL CHECK DP-50 OTHER: Chemetall Oakite/Ardrox 906

CLEANER / REMOVER: DUBL CHECK DR-60 OTHER: Chemetall Oakite/Ardrox 9PR50

DEVELOPER: DUBL CHECK D-100 OTHER: Chemetall Oakite/Ardrox 9D1B

LIGHTING EQUIPMENT: [X] FLOURESCENT LIGHT
[ ] FLASHLIGHT [ ] # OF BATTERIES TYPE: ____ CELL ____
MAXIMUM DISTANCE FROM OBJECT: ____ FEET
[ ] OTHER ____

MINIMUM LIGHT INTENSITY ON SURFACE TO BE EXAMINED: 100 FOOT CANDLES

EXAMINATION RESULTS

IDENTIFICATION:

CUSTOMER: PERENNIAL ENERGY DATE: 3-11-11

JOB #: 108301 ITEM #: .1 FR/BK (EXAMPLE: .1, .2, .3)

MATERIAL TYPE: SA240-304 SS MATERIAL THICKNESS: ____

EXAMINATION PERFORMED:

[X] PLATE EDGES BEFORE WELDING (WRAPPERS, END PLATES, TUBE AND PLUG SHEETS WHICH HAVE BEEN BEVELED) AND AFTER WELDING (PERIPHERAL EDGE OF TUBE AND PLUG SHEETS) PER ASME SECTION VIII, DIV. 1, UG-93
BEFORE 3-10-11 AFTER 3-11-11
[X] ALL WELDED SEAMS WHERE ACCESSIBLE
[X] ALL FINAL WELD SEAMS, NOZZLES, & COUPLINGS WHERE ACCESSIBLE
[X] ALL NOZZLE & COUPLING ROOT PASSES WHERE ACCESSIBLE
[X] ALL NOZZLE AND COUPLING HOLE OPENINGS FOR LAMINATION
[ ] OTHER ____

EXAMINATION RESULTS:

[X] ACCEPT [ ] REJECT

DESCRIPTION AND/OR MAP OF INDICATIONS FOUND

AXH AIR COOLERS QC CERTIFIED

EXAMINER QUALIFICATION LEVEL

AXH air-coolers

HYDROSTATIC TEST REPORT

MANUFACTURED FOR **PERENNIAL ENERGY**

AXH JOB NUMBER **108301**

VESSEL TESTED **108301.1 AC**

TEST PRESSURE **138** PSI

HYDRO TEST HELD FOR **1** HR.

THIS REPORT IS TO CERTIFY THAT THE AFOREMENTIONED VESSEL (OR) VESSELS WERE HYDROSTATIC TESTED IN ACCORDANCE WITH ASME SECTION VIII DIV 1.

CUSTOMER WITNESS _____

DATE 3-17-11 BY R. Gambrea

QUALITY CONTROL DEPARTMENT

AIRTECH Products, Inc.

Duraflow Industrial Louvers

- Aluminum or Galvanized Steel Construction
- Built to Heavy Duty Airtech Standards
- Optional API 661 Compliance
- Bolted or Welded Construction
- Internal Mechanism / Actuation

- Bug Screens & Hail Guards
  - Wire Cloth
  - Expanded Metal
  - Vinyl
- Fan Guards
- Recirc Doors with Frames

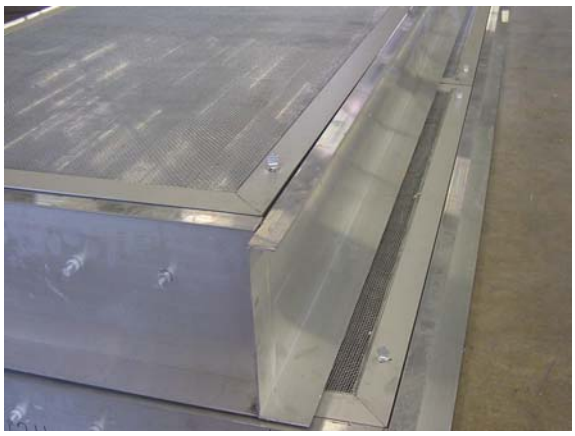

- Short Lead Times
- Built to Customer Specifications
- Competitive Pricing
- Domestic or Export Crating

AIRTECH Products, Inc.
P.O. Box 790
Sand Springs, OK 74063
Phone: 918-241-0264
Fax: 918-241-0270
Email: info@airtechinc.biz

Technical Information / Standard Configurations

Aluminum Frame (extrusion):	6063-T5
Aluminum Frame (folded sheet):	3003-H14
Galvanized Steel Frame:	A653-G90 Carbon Steel (Mechanical Galvanized Finish)
Blades:	6063-T6 Aluminum
Blade Pins:	
Aluminum:	6061-T6 Aluminum
Stainless Steel:	303 Stainless Steel
Torque Tube:	6063-T6 Aluminum
Actuator Rod:	6063-T6 Aluminum
Actuator Lever Arm:	6061-T6 Aluminum
Clevis:	1018 Carbon Steel
Clevis to Arm Connecting Link:	6061-T6 Aluminum

Assembly Hardware:

Cap Screws:	ANSI/ASME 18.2.1 Grade 5, Zinc Plate
Nuts:	Locking nut, Performance Spec IFI/100, MIL/N/25027, Light Hex, Standard Height, Zinc Plate
Bearings:	Glass Filled Nylatron, (Per API Specification 661)

Series 300
- **3 ¾" Frame**
- **4" Blade**

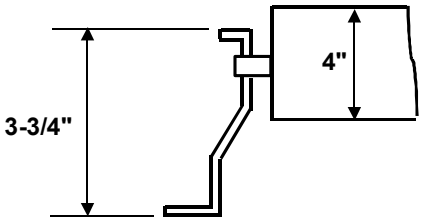

Series 400
- **4" Frame**
- **4" Blade**

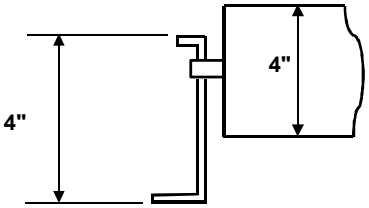

Series 700
- **7 ½" Frame**
- **6 ½" Blade**

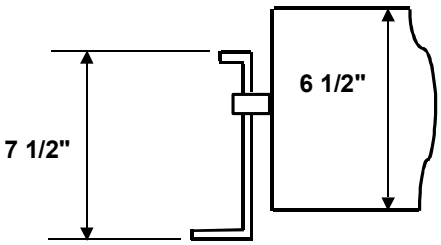

Series 740
- **7 ½" Frame**
- **4" Blade**

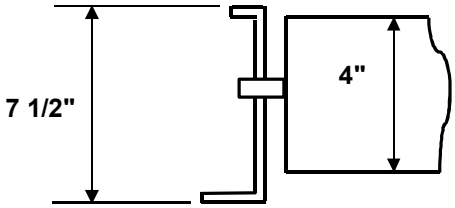

Series 1000
- **10 ½" Frame**
- **6 ½" Blade**

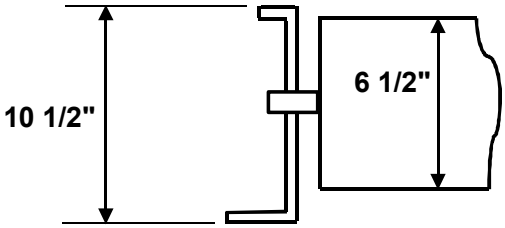

Airtech Products, Inc., P.O. Box 790, Sand Springs, OK 74063
Phone: 918-241-0264, Fax: 918-241-0270
Email: info@airtechinc.biz

AIRTECH PRODUCTS, INC.

P.O. Box 790 **918-241-0264 (Phone)**
8101 West 16th Street **918-241-0270 (Fax)**
Sand Springs, OK 74063
Email: info@airtechinc.biz

Duraflow Industrial Louvers

Installation and Maintenance Instructions

PRE-INSTALLATION ACTIVITIES:

1. With the louver crate resting firmly on either saw horses or a smooth and level area at grade, remove packing crate top and sides.
2. Make a visual inspection of the louver frame, blades and all linkages/drive mechanisms to ensure there was no shipping damage.
3. Various small parts needed to connect the drive linkages are shipped in a separate and smaller cardboard box. Keep this box at hand but out of the way and in a safe place.
4. Inspect the mounting surface of the cooler giving particular attention to ensure it provides uniform support of the louver perimeter and that it is structurally adequate to support all static and dynamic loadings.
    a. If the louver is to be mounted in a horizontal configuration, it is CRITICALLY IMPORTANT to ensure the mounting surface is uniform and level to +/- .25" over 20'. Airtech louvers are manufactured to precise tolerances and bolting to an off-level surface will cause binding in the moving parts. This will result in inconsistent operation, shorten product life and can cause permanent damage that voids the manufacturers warranty.
    b. If the louver is to be mounted in a vertical configuration, the installer must confirm there will be uniform support / attachment to the mounting surface at spacing not greater than 18" centers on the louver perimeter flange. Failure to do so may result in bending of the louver frame and inconsistent operation, a shortened product life and can cause damage that voids the manufacturers warranty.
5. Take a moment to visualize the installation and plan the placement of individual louver sub-assemblies. Although all louver installations involve essentially the same procedure, any given application will have some unique characteristics. Some projects will require louver sections to link together at the side via torque tube connectors while others may link together at the ends via end links on the actuator rod. Small projects may require neither type of connection while large projects will require both.
6. Open the cardboard box of small parts and confirm all the necessary pieces are at hand. Depending on the application, this could be torque tube couplings, actuator rod end links, grade level operator components, clevises, etc. Please note, unless the louvers are to be attached via angle clips, the actual attachment hardware won't be included in the louver shipment.
7. Most of the time, louver installation is easiest done using self-drilling speed screws, ¼" x 1¼" long, fine thread. Ensure a screw is in place on all corners and not greater than 18" centers around the louver perimeter. Simply drill through the louver flange into the host structure making sure the screw is completely pulled down tight. If retaining clips is your preferred method of attachment, please review to "Reference A" for instructions on use and installation.

MOUNTING & ATTACHMENT

1. Hoist the louver (or first louver sub-section) into place making sure the lift is well supported around the perimeter. DO NOT ALLOW THE LOUVER TO RACK or excessively bend during the lifting process.
    a. **For horizontal applications,** set the louver onto the mounting surface and visually confirm 100% of the perimeter is supported and resting flat upon the top of the cooler. Make sure the operating mechanism travels freely through the entire range of motion and there is no interference from complete shut to complete open. If the louver is supplied in multiple sections, install the section with the operator first and perform the motion/operation test noted above. Square the louver to the cooler as best you can but above all, be sure the louver remains square – do not force to the louver out of square to accommodate the cooler. THE LOUVER MUST BE SQUARE to operate properly. After confirming the louver is properly placed relative to the mounting surface (and to other subsequent sections, if applicable), install a self-drilling screw at each corner and at no greater than 18" centers along all flanges. If applicable, hoist subsequent sections into place and following the above instructions, attach each to the host structure. DO NOT STEP ON LOUVER BLADES AT ANY TIME. If you must step out onto the louver, use dimension lumber or plywood as a walking surface.
    b. **For vertical applications**, hoist the louver (or first louver section) into place and after checking for clearance on moving parts, attach to the cooler with a self drilling screw at each corner and at no greater than 18" spaces along all flanges. Install all attachment screws before releasing hoist cables or hoisting device to ensure the louver is fully attached and there is no deflection in the louver frame. If applicable, hoist subsequent sections into place and following the above instructions, attach each to the host structure.
2. If the louver is supplied in multiple sections, remove the connecting links / couplers from the shipping box and install them as required at the ends of actuator rods and torque tubes. End link installation instructions are detailed as attached "Reference B" and Torque Tube coupling installation instructions are detailed as attached "Reference C".
3. When all sections are installed and connected, test the drive mechanism to ensure it moves freely, without binding or interference. On very large louvers with multiple sections, this may require use of a lever. Small to average size louvers should easily operate by hand strength on the torque tube.
4. Complete the installation by attaching any remaining components such as pneumatic actuator or grade level operators. Detailed installation instructions for actuator can be found in its shipping carton. For instructions on grade level operators, see attached "Reference D".
5. After installing any remaining operators, complete the installation process by cycling the louver several times to ensure it moves freely, without interference and isn't binding at any location. Some adjustment of end links may be required to ensure all louver blades open and shut consistently down the entire length of the louver.
6. Check all attachment fasteners to ensure all are properly tightened and completely engaged to the louver flange.
7. If applicable, check all end link connections and torque tube couplers to ensure they are properly tightened and fasteners are completely engaged.

MAINTENANCE INSTRUCTIONS (Annual)

1. Visually inspect all blade pins to ensure the pin bearings are in place and do not have unacceptable wear.
2. Visually inspect all connections between blade horns and actuator rod to confirm all connecting bearing, bolts and nuts are in place and not showing unacceptable wear.
3. Visually inspect all attachment screws to ensure none have backed off or are missing.
4. If dirt or grease buildup is excessive, clean louver blades and operating mechanisms with high pressure clear water wash.
5. Operate any manual levers or grade level operators to confirm all are in good working order and move freely without binding or interference.
6. If actuators are installed, visually inspect the mounting bolts to ensure all are tight and in place. Visually inspect the condition of all connecting links, the clevis and clevis pin.
7. Visually inspect all actuator rod end links and torque tube connectors to confirm all are in place and properly engaged.
8. Remove any leaves or other debris that may have collected in corners or between the louver blades and integral hailguards.

RECOMMENDED SPARE PARTS LIST

Item Description	Suggested Quantity
1. Blade horn bearing, bolt and nut kit	1 per 5 Ft^2 louver area
2. Actuator rod end link kit	1 per 2 connections
3. Torque Tube couplings	1 per 2 torque tube connections
4. Blade Pin and Pin Bearing kits	5 per 10 Ft^2 louver area
5. Manual handle kits	1

AIRTECH Products Inc.

Reference A

MOUNTING CLIP DETAIL

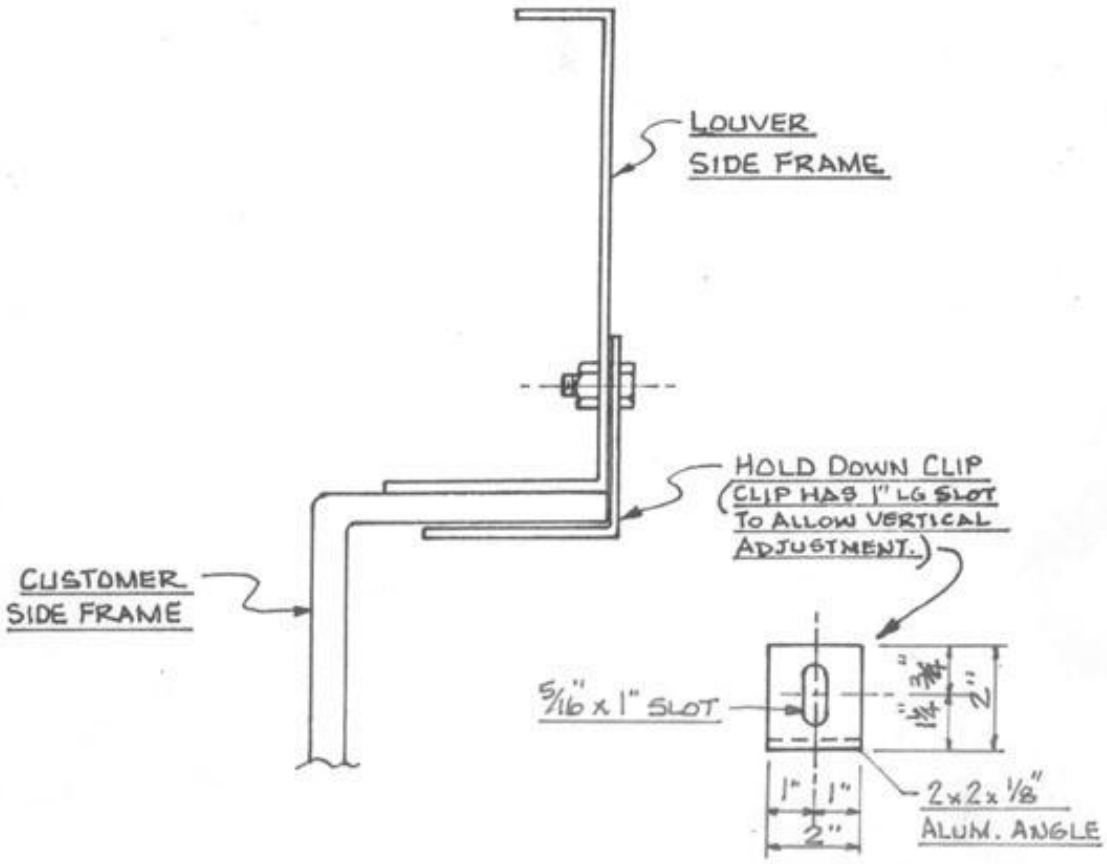

P.O. BOX 790

SAND SPRINGS, OK 74063

(918) 241-0264

Reference B

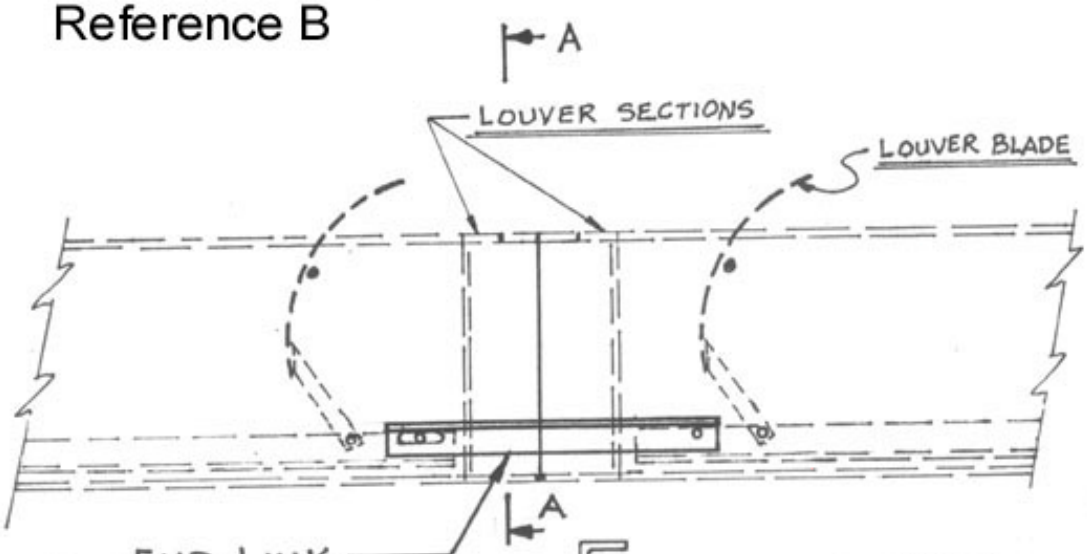

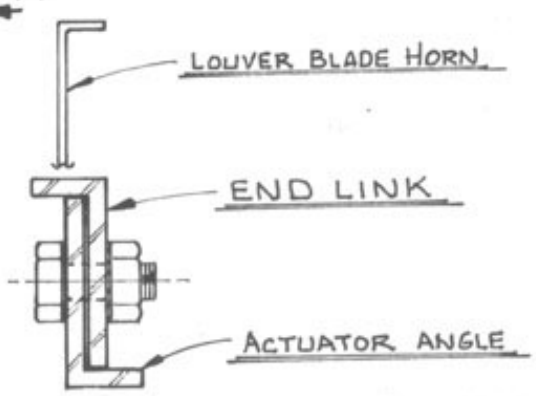

SECTION: A-A

INSTALLATION

1. Position blades in each louver section to same percent of opening.
2. Insert End Link through slots in louver section end frames.
3. Install End Link by attaching to louver actuator rods using the 1/4" bolts and locknuts provided.

END LINKS ARE $3.25 each including bolts & nuts.

AIRTECH

INDUSTRIAL SHUTTERS

END LINK INSTALLATION

Cust.	
Date	Dwg. 700-4

Reference C

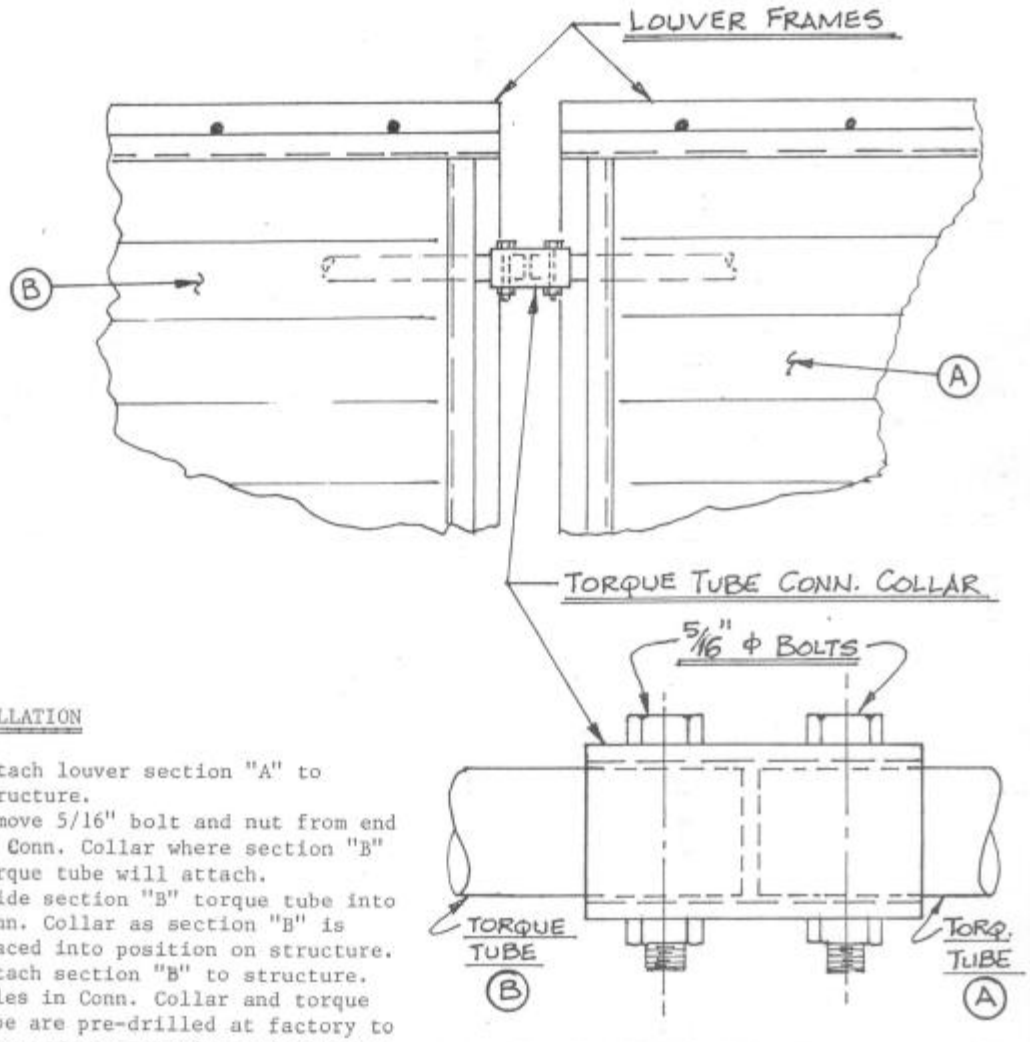

INSTALLATION

1. Attach louver section "A" to structure.
2. Remove 5/16" bolt and nut from end of Conn. Collar where section "B" torque tube will attach.
3. Slide section "B" torque tube into Conn. Collar as section "B" is placed into position on structure.
4. Attach section "B" to structure.
5, Holes in Conn. Collar and torque tube are pre-drilled at factory to assure proper opening and closing of louver blades. Be sure all louver blades are in same percent of opening before replacing 5/16" bolt and nut to Conn. Collar and section "B" torque tube.

AIRTECH

INDUSTRIAL SHUTTERS

Connecting Collar Installation

Cust.	
Date	DWG. 700-4

Reference D

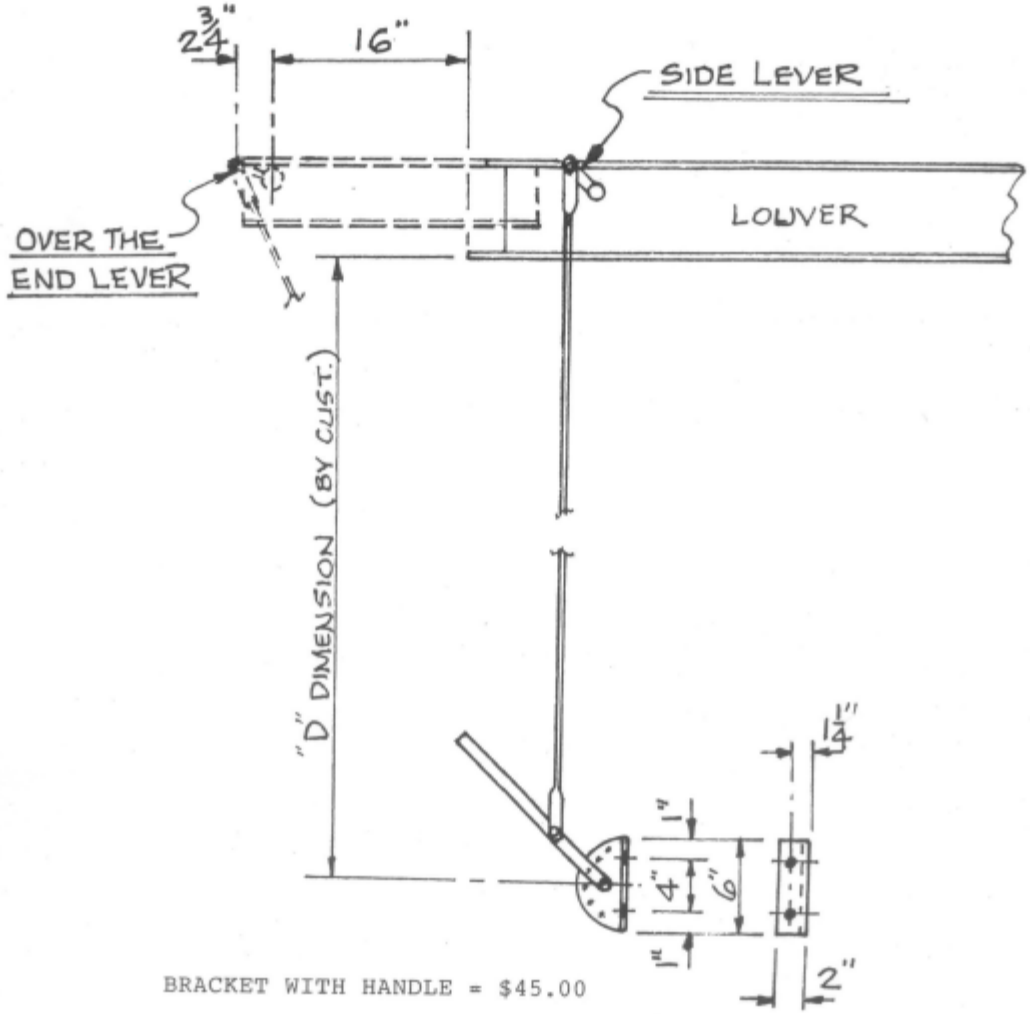

BRACKET WITH HANDLE = $45.00

AIRTECH
INDUSTRIAL SHUTTERS

MANUAL GRADE LEVEL OPERATOR

Cust.	
Date	Dwg. 700-5

Reference E

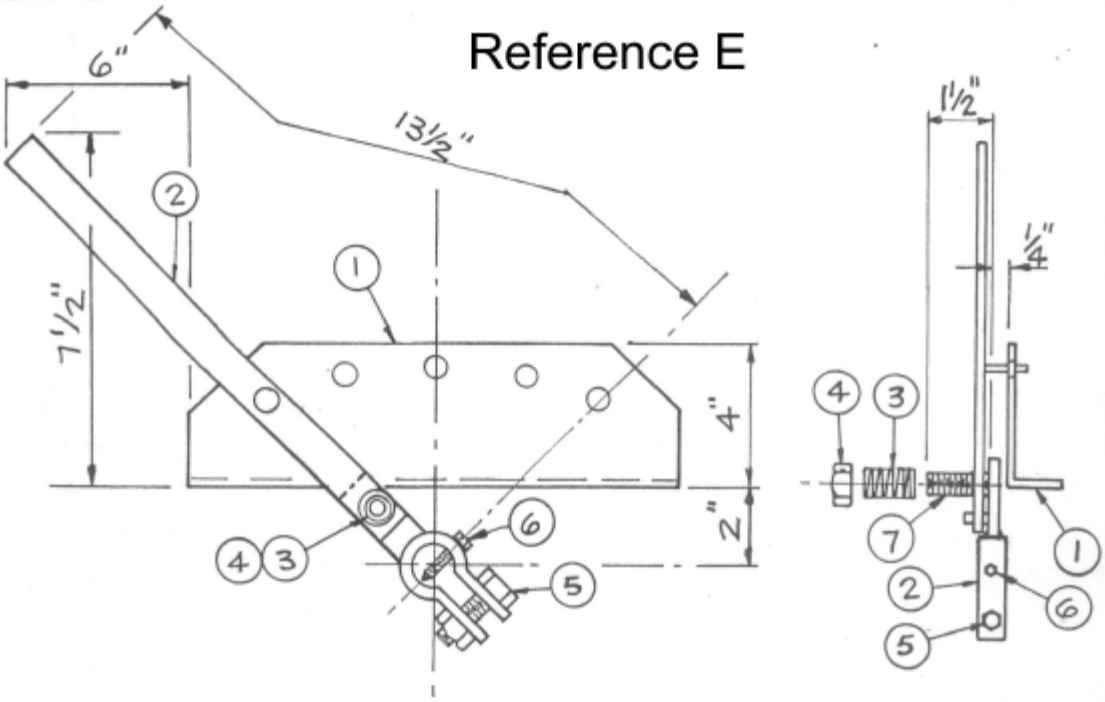

MANUAL OPERATOR DETAIL

(1) = Manual Operator Bracket.
(2) = Manual Operator Handle.
(3) = Manual Operator Handle Spring.
(4) = Manual Handle Nut.
(5) = Manual Handle Clamp Bolt & Nut.
(6) = Set Screw
(7) = 3/8" dia. all-thread.

AIRTECH
INDUSTRIAL SHUTTERS

MANUAL OPERATOR PARTS

Cust.	
Date	Dwg. 700 - 3

Reference F

AIRTECH PRODUCTS, INC.

P.O. Box 790
8101 West 16th Street
Sand Springs, OK 74063

918-241-0264 (Phone)
918-241-0270 (Fax)

Louver Materials of Construction

Aluminum Frame (extrusion):	6063 T5
Aluminum Frame (folded sheet):	3003 H14
Galvanized Steel Frame:	A653-G90 10 Ga. Carbon Steel (Mechanical Galvanized Finish)
Blades:	6063-T6 Aluminum
Blade Pins:	
Aluminum:	6061-T6 Aluminum
Stainless Steel:	303 Stainless Steel
Torque Tube:	6063-T6 Aluminum
Actuator Rod:	6063-T6 Aluminum
Actuator Lever Arm:	6061-T6 Aluminum
Clevis:	1018 Carbon Steel
Clevis to Arm Connecting Link:	6061-T6 Aluminum

Assembly Hardware:

Cap Screws:	ANSI/ASME 18.2.1 ¼-20, Grade 5, Zinc Plate
Nuts:	Nylon Insert lock nut, Performance Spec IFI/100, MIL/N/25027, Light Hex, Standard Height, Zinc Plate
Bearings:	Glass Filled Nylatron, (Per API Specification 661)

Airtech Products, Inc.
P.O. Box 790
8101 West 16th Street
Sand Springs, OK 74063

918-241-0264 Phone
918-241-0270 Fax

Reference G

LOUVER PRESSURE DROP CURVE

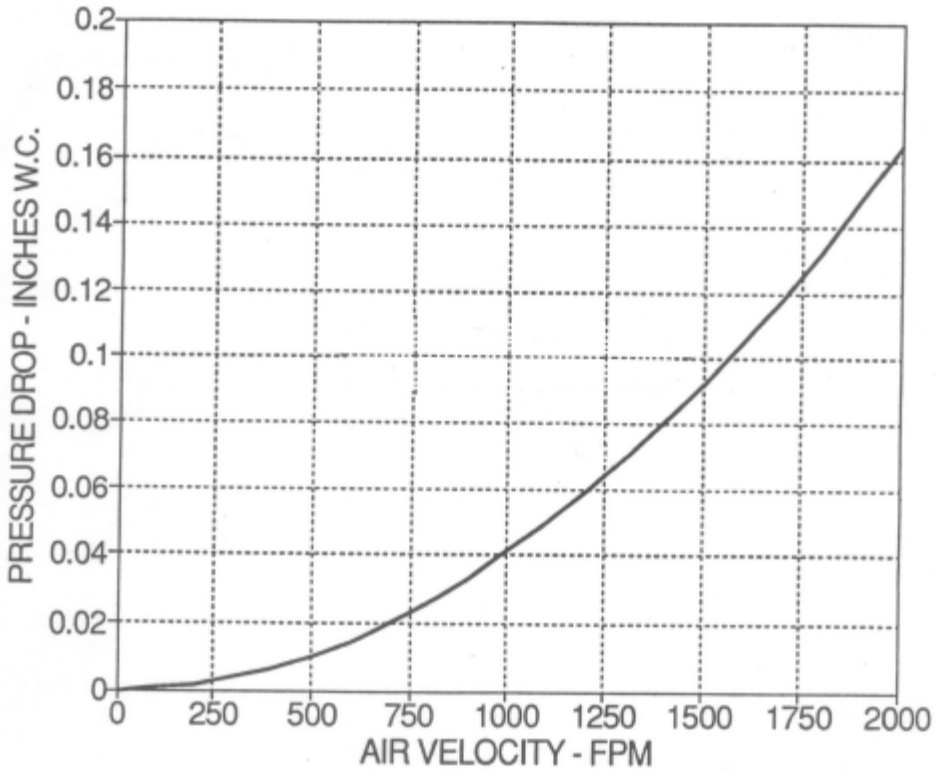

DENSITY RATIO = 1.0

Corrected Pressure Drop Across The Louvers As A Function of Air Speed Within The Wind Tunnel.

Airtech PRODUCTS, INC.

Pressure Drop vs Degree of Opening

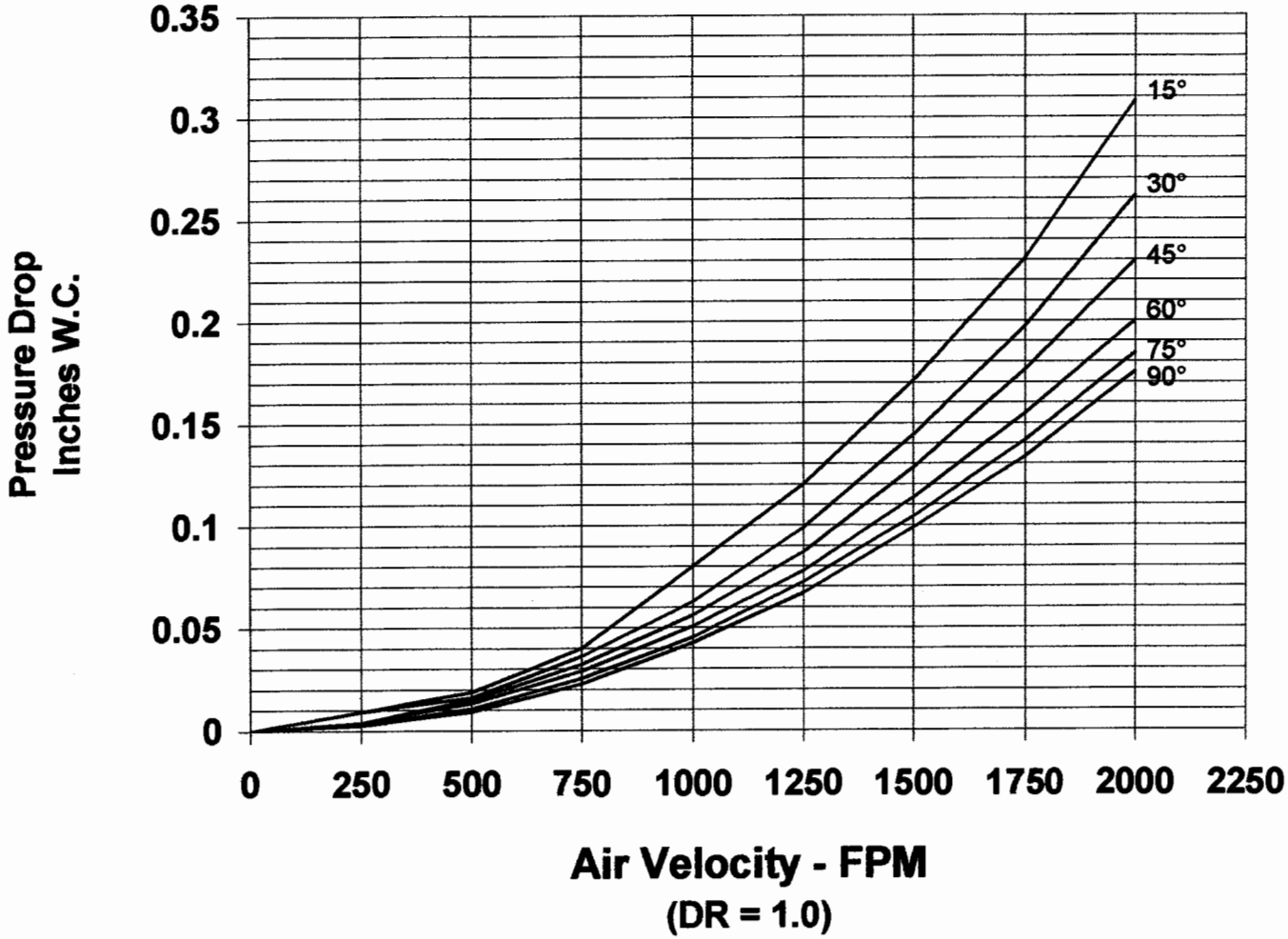

Airtech
PRODUCTS, INC.

Percent of Volume Per Degree Open

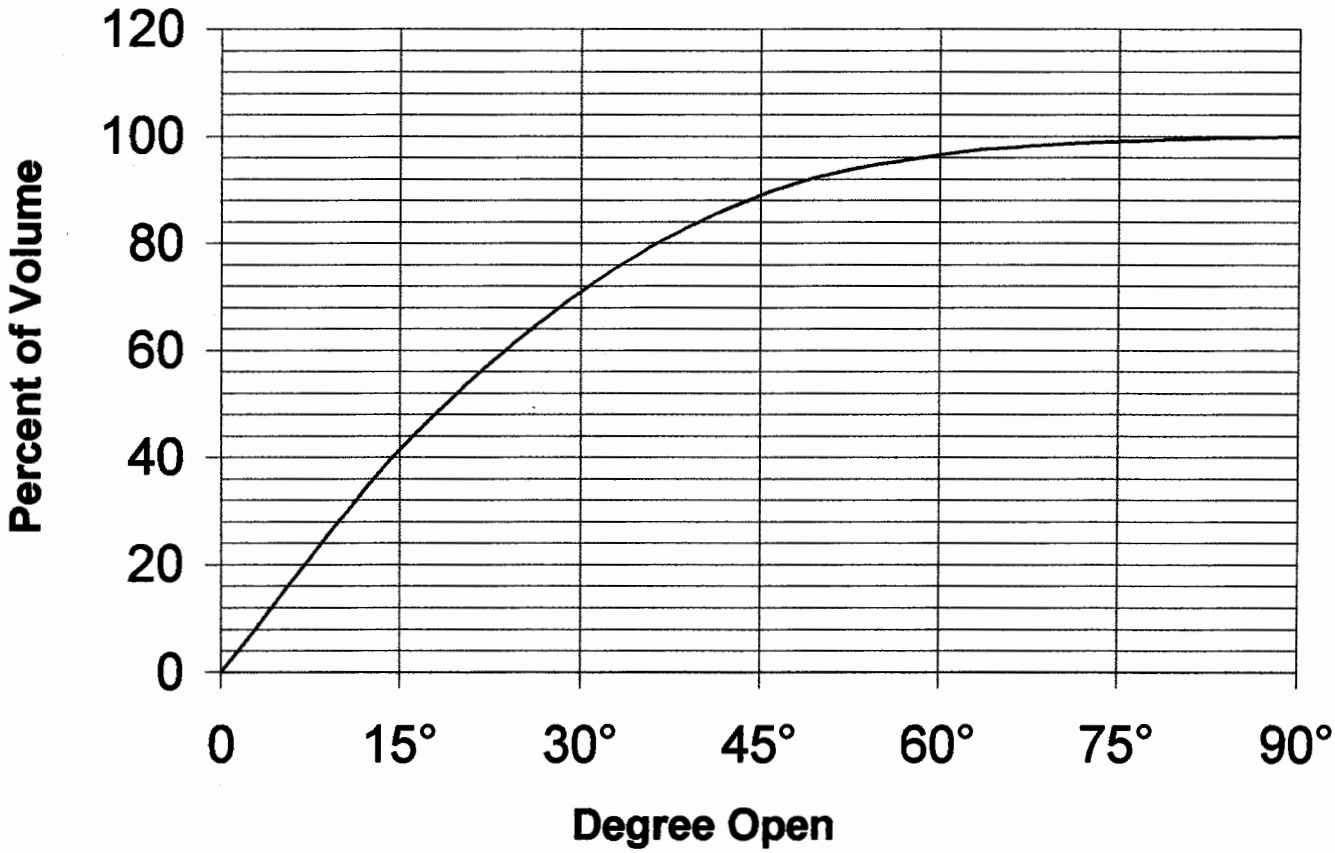

MULTI-WING™

DATASHEET

ENGLISH

OUR W SERIES

The W series is a very comprehensive series covering diameters from 504mm up to 2141mm. With nine different blade profiles it is incredibly versatile. Consequently, it is possible to select the right impeller for almost any air moving application.

The W series offers light but broad blades designed for coil applications with low speed motors and moderate power consumptions. The W series is also well suited for high performance air moving units such as mobile radiators and wood dryers.

MULTI-WING™

Max diameter

Blade type									Pos. in hub
1W	2W	3W	5W	6W	7W	8W	9W	TR11W	No.
905-911	-	-	-	1158	-	1226	-	-	3-5 (LP)
968-985	1240-1251	1785	1120	1232	1536	1300	1785	1250	6
-	-	-	1120	1250	-	-	1600	1250	6 HP
1065-1082	1335-1355	1878-1890	1226	1338	1642	1406	1891	1356	8
-	-	-	1226	1356	-	-	1706	1356	8 HP
1149-1165	1417-1444	1960-1981	1316	1428	1732	1496	1981	1446	10
-	-	-	1316	1446	-	-	1796	1446	10 HP
1298-1311	1559-1592	2097-2144	1476	1588	1892	1656	2141	1606	13

All dimensions are in mm.
The max. diameter may vary depending on the blade material.
LP = Light duty die cast hub,
HP = Heavy pressure die cast hub.

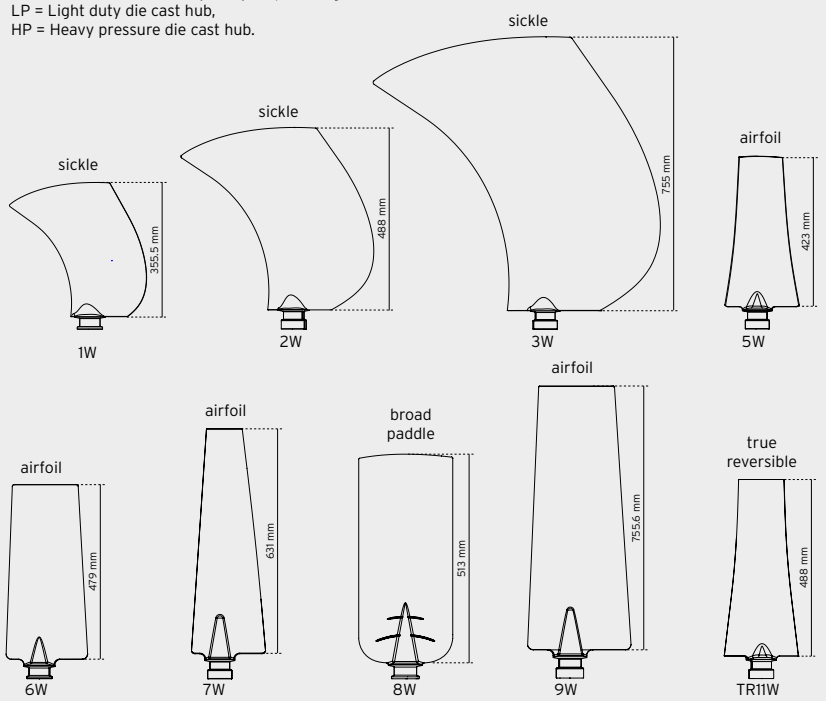

Design Features

- 9 fan blades of different designs and sizes with adjustable pitch setting.
- Unique pitch setting system ranging from 20° to 50°, allowing the impeller range to be fully adjustable with 1° increment.
- Most fan blades are available for both clockwise and counter-clockwise rotation.
- 7 hub sizes (3, 4, 5, 6, 8, 10 & 13 blades all symmetrically arranged), each available in a range of bore/fixing configurations.
- Special heavy-duty die cast aluminium hub (HP) for high temperature and high stress applications.

Materials

The hub parts are as standard manufactured in a pressure die cast silumin alloy EN AC-Al Si12 Cu1 (Fe). The fan blades are available in the following 5 materials to suit applications with different speeds and ambient temperatures.

PPG Glass reinforced polypropylene
Temperature range: -10°C to +80°C

PAG Glass reinforced polyamide
Temperature range: -40°C to +120°C

PAGAS Antistatic glass reinforced polyamide
For explosion proof working conditions
Temperature range: -40°C to +110°C

PAGST Vibration stabilised glass reinforced polyamide
Temperature range: -40°C to +110°C

AL Aluminium
Temperature range: -60°C to +245°C
Standard alloy for the fan blades is EN AC-Al Si12 Cu1 (Fe).

Please observe penalty factors for operation above listed max temperatures. For further information on high temperature operation please refer to Multi-Wing's Optimiser programme.

We reserve the right to change the materials of manufacture.
The values for the mechanical properties are mean values and can be subject to variations due to the use of different suppliers.

E902003500I 0309

Selection guide

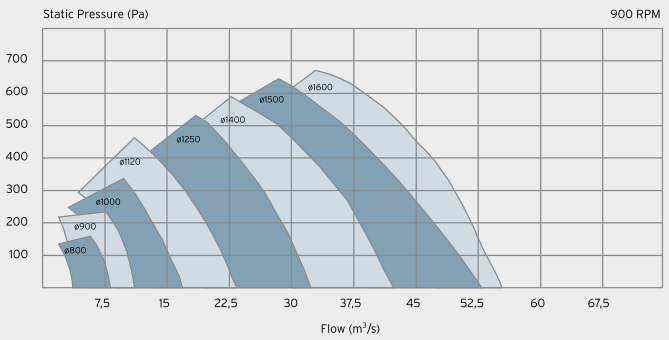

Selection guide

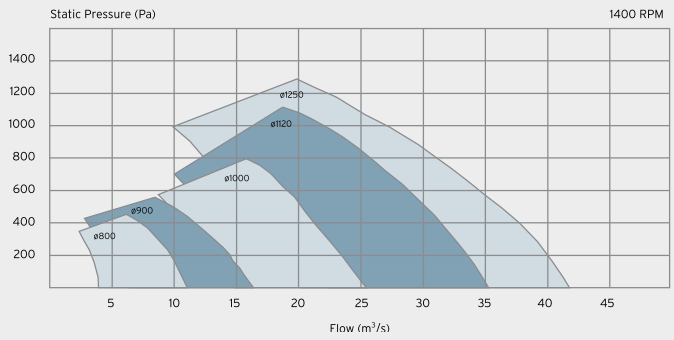

DATASHEET

ENGLISH

TAPER LOCK MOUNTING H, Z AND W SERIES

Flexibility is a key word for Multi-Wing – not only when matching the right impeller with the duty point, but also when it comes to mounting the impeller. Regardless if it is a straight bore for electrical motors, a conical bore for hydraulic pumps, a flange drive on the diesel engine or the taper lock for Nema type motors you will find the right hub in the Multi-Wing range.

Please contact us if you want information on other mounting options, or visit www.multi-wing.com

MULTI-WING™

Dimensions

Pos in Hub			ø Bores		QD	Mounting torque	Hub		
No			mm	Inches	Type	Nm	d2	d3	d4
H	Z	W							
10, 12, 14			11, 12, 14, 16	5/8 (15,88), 3/4 (19,05), 13/16 (20,64), 7/8 (22,23)	JA	7	73	75	90
10, 12, 14			24	-	SH	10	82	75	90
10, 12, 14			24, 28, 30, 38, 40, 42	1/2 (12,7), 1 (25,4), 1 1/8 (28,58), 1 3/16 (30,16), 1 1/4 (31,75), 1 3/8 (34,93)	SD	10	82	75	90
10, 12, 14			28, 38	1 1/8 (28,58), 1 3/8 (34,93)	P1	17	82	75	90
	6, 7, 8, 9, 12, 16		11, 12, 14, 16	5/8 (15,88), 3/4 (19,05), 13/16 (20,64), 7/8 (22,23)	JA	7	73	75	90
	9, 12, 16		38, 42, 48, 50, 55	1/2 (12,7)	SK	20	130	90	110
	9, 12, 16		48, 50, 55, 60	1/2 (12,7)	SF	31	130	90	110
	6, 7, 8, 9, 12, 16		24	-	SH	10	82	75	90
	6, 7, 8, 9, 12, 16		24, 28, 30, 38, 40, 42	1/2 (12,7), 1 (25,4), 1 1/8 (28,58), 1 3/16 (30,16), 1 1/4 (31,75), 1 3/8 (34,93)	SD	10	82	75	90
	6, 7, 8, 9, 12, 16		28, 38	1 1/8 (28,58), 1 3/8 (34,93)	P1	17	82	75	90
		3LP, 4LP, 5LP	11, 12, 14, 16	5/8 (15,88), 3/4 (19,05), 13/16 (20,64), 7/8 (22,23)	JA	7	73	75	90
		5, 5HP, 6, 6HP, 8, 8HP, 10, 10HP	38, 42, 48, 50, 55	1/2 (12,7)	SK	20	130	90	110
		5, 5HP, 6, 6HP, 8, 8HP, 10, 10HP	48, 50, 55, 60	1/2 (12,7)	SF	31	130	90	110
		3LP, 4LP, 5LP, 5, 6, 8, 10	24	-	SH	10	82	75	90
		3LP, 4LP, 5LP, 5, 6, 8, 10	24, 28, 30, 38, 40, 42	1/2 (12,7), 1 (25,4), 1 1/8 (28,58), 1 3/16 (30,16), 1 1/4 (31,75), 1 3/8 (34,93)	SD	10	82	75	90
		3LP, 4LP, 5LP, 5, 6, 8, 10	28, 38	1 1/8 (28,58), 1 3/8 (34,93)	P1	17	82	75	90

Bores mentioned above are the ones in stock, others are available. SK and SF can only be mounted in AR and BR.
If the diameter of your desired aluminium impeller exceeds ø750mm and your desired bore exceeds ø38, we use bosses from the W-series as standard.
If you need longer bosses than the ones mentioned above, boss extensions in three different lengths – 10mm, 20mm and 30mm – are available.
Different sizes of boss extensions can be combined to obtain a given length.

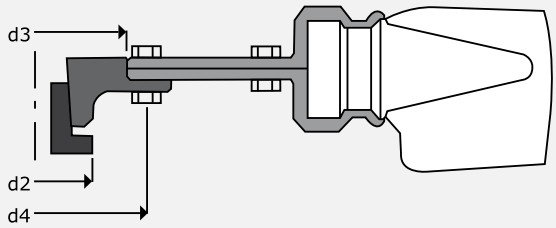

Type H

Type Z

Type W

E902028200I 1007-500

DATE: May 12, 2005	CONNECTION DIAGRAM	CATALOG NO.: E0038

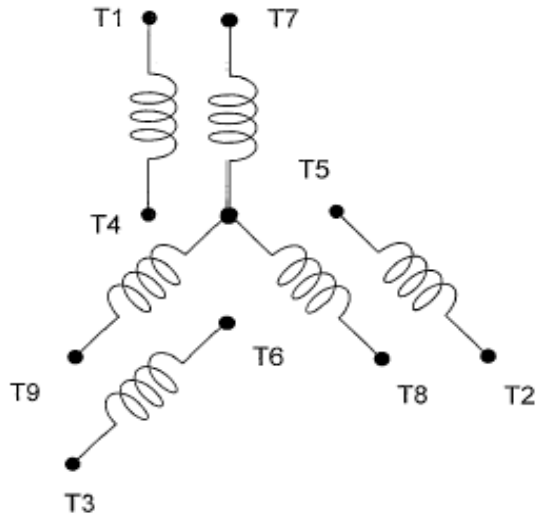

SCHEMATIC - 2Y/Y CONNECTION

ACROSS THE LINE CONNECTION

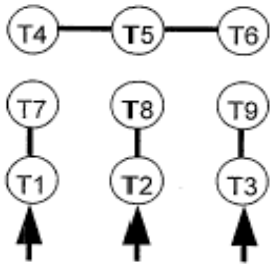

LINE
230 VOLT CONNECTION

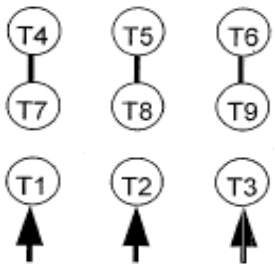

LINE
460 VOLT CONNECTION

TECO Westinghouse	DWG NO. DAC-1566-2

OPERA□ ION

□

MAIN□ ENANCE MANUAL FOR □ □ REE P□ ASE INDUC□ ION MO□ ORS

□ECO□W□□□□□□□□□□□ M□□□r C□□ □□□□
□□□□ N□r□□ I□ □□□
R□□□d R□□□, □□. □□□□□

INDE PAGE

1. INTRODUCTION…… 1
2. ACCEPTING, INSPECTION, STORAGE, TRANSPORTATION…… 2
3. INSTALLATION…….. 4
   3.1 Site and environment for motor installation…….. 4
   3.2 Foundation…….. 4
   3.3 Installation of shaft coupling…….. 6
   3.4 Installation of belt drive…… 9
   3.5 Conveyance with chain or gear…….. 10
   3.6 Electrical connections…… 11
4. OPERATION…… 12
   4.1 Examination before starting…… 12
   4.2 Starting operation…….. 15
5. MAINTENANCE…….. 17
   5.1 Major points in regular inspection and maintenance…….. 17
   5.2 Motor windings……... 18
   5.3 Cleaning of the interior of the motor…… 18
   5.4 Cleaning of the exterior of the motor……... 19
   5.5 Maintenance of anti-friction bearings…….. 19
      5.5.1 Frequency of re-lubrication…….. 19
      5.5.2 Kinds of grease…… 20
      5.5.3 Grease quantity…… 20
      5.5.4 Re-greasing…….. 20
      5.5.5 Oil re-lubrication…… 22
      5.5.6 Cleaning and installation of bearings…… 23
   5.6 Maintenance of sleeve bearings…… 24
      5.6.1 Daily inspection……... 24
      5.6.2 Regular examination…….. 24
      5.6.3 Disassembly…… 25
      5.6.4 Re-assembly…… 26
   5.7 Maintenance of slip rings (for Wound Rotor only)…… 27
   5.8 Maintenance of non-reverse ratchet mechanism (Vertical Motors only) 29
6. FAULT FINDING AND RECOGNITION…….. 31

1. INTRODUCTION

This and the following instruction address the more common situations encountered in motor installation, operation and maintenance. For the TWMC motor warranty to be and to remain in effect, the motor must be installed and operated in strict accordance with the outline drawing, motor nameplates and these instructions and must not be altered or modified in any unauthorized manner.

During the installation and operation of motors in heavy industrial applications there is a danger of live electrical parts and rotating parts. Therefore to prevent injury and/or damage the basic planning work for installation, transportation, assembly, operation, etc... needs to be done and checked by authorized and competent personnel only.

Since these instructions cannot cover every eventuality of installation, operation and maintenance, the following points should be considered and checked.

- The technical data and information on permissible use such as assembly, connection, ambient and operating conditions given in the related catalogue, operating instructions, nameplates and other production documentation.
- The general erection and safety regulations.
- The local and plant-specific specifications and requirements.
- The proper use of transport, lifting devices and tools.
- The use of personal protective equipment.

Following indications should be observed when reading these instructions.

Safety instructions are marked as follows:

Warning of electric hazards for personnel.

Warning of dangers for personnel.

ATTENTION!
Warning of damage for the motor or installation.

2. ACCEPTING, INSPECTION, STORAGE, TRANSPORTATION

Inspection upon receipt
Check to following points upon receipt:

- Are the nameplate ratings identical with what you ordered?
- Are dimensions and color in compliance with your specifications?
- Are the nameplate ratings for space heater, thermal protector, temperature detector, etc. identical with what you ordered?
- Is there any damage?
- Are all accessories and accompanying instruction manuals in good order?
- Please ensure that the arrow head indicator really indicates direction of rotation.
- If there are any specific requirements, please ensure they are in conformity with your specifications.

2.1 Storage
When motors are not in operation, the following precautionary measures should be undertaken to assure best performance.

2.2 Place
(a) High and dry, well ventilated without direct sun, dust or corrosive gas.
(b) Not located near to a boiler or freezer.
(c) Entirely free form vibration and easy for movements.
(d) Motors should be put on pallets to prevent moisture.

2.3 Moisture prevention
Since moisture can be very detrimental to electrical components, the motor temperature should be maintained about 3ºC above the dew point temperature by providing either external or internal heat. If the motor is equipped with space heaters, they should be energized at the voltage shown by the space heater nameplate attached to the motor. Incandescent light bulbs can be placed within the motor to provide heat. However, if used, they must not be allowed to come in contact with any parts of the motor because of the concentrated hot spot that could result.

2.4
Even during storage, the insulation resistance should be kept above the specified values.
(a) For measurement of insulation resistance and acceptable standard values, please refer to measures stated in 3.1.2 “Measurement of insulation resistance”.
(b) Insulation resistance test should be performed once every three months.

2.5

If the motor is not in operation for a long period (one week and above) after installation or has been in operation but stopped for a period of time, the following precautions must be taken.

(a) Protect the motor as measures stated in 2.2.3.
(b) Insulation resistance test should be performed as stated in 2.2.4.

2.6 Bearing protection

(a) If the motor has been provided with a shaft shipping brace to prevent shaft movement during transit, it must be removed before operating the motor. It is very important that this brace be re-installed exactly as it was originally, before the motor is moved form storage or any time when the motor is being transported. This prevents axial rotor movement that might damage the bearings.
(b) Motors equipped with sleeve bearings are shipped from the factory with the bearing oil reservoirs drained. In storage, the oil reservoirs should be properly filled to the center of the oil level gauge with a good grade of rust inhibiting oil. To keep the bearing journals well oiled and to prevent rusting, the motor shaft should be rotated several revolutions about every month ensuring the shaft does not come to rest in its original position. While the shaft is rotating, it should be pushed to both extremes of the endplay.
(c) Motors with anti-friction bearings are properly lubricated with the correct grade of grease at the factory and no further greasing is required in storage. The shaft should be rotated several revolutions about every month to maintain proper distribution of the grease within the bearings.
(d) Tilt-pad bearings are a type of sleeve bearing used in special design applications. Due to the nature of this bearing, a loose oil ring for delivering lubricant cannot be provided. Therefore, during the storage internal, oil must be periodically manually introduced into the pads and housing to prevent the occurrence of oxidation of the precision machined components.
    (1) Remove the pipe plug from the bearing cap located above the tilt-bearing shell.
    (2) Pour in approximately one cup of oil every month and rotate the shaft a few revolutions about every two (2) weeks.
    (3) For long periods of storage, the oil that accumulates in the housing should be removed.

ATTENTION!
Care should be taken to keep parts such as fitting surfaces, key, shaft extension and axial central hole from any collision with foreign matter. Grease should also be generously applied to prevent rusting.

2.7 Transportation

To keep the rotating parts of motors from moving, thus preventing damage and scratching during transportation, they should be held securely with a locking device. Remove all transit clamps before operating the motor. It is very important that this device be reinstalled exactly as it was originally, before the motor is moved from storage or any time when the motor is being transported. The vertical mounting type motors should be transported in the vertical position.

Do not use the hoisting hook/eyebolts to lift more that the motor itself. They are designed to support the motor only. Make sure the hoisting hook is correctly attached to the eyebolt(s)/lug(s) are fully screwed in before hoisting. Also note such parts as fan cover, ventilation box, bracket, slip-ring, etc. may have their own hoisting lugs which can only carry their own weight. Nothing extra should be attached while hoisting.
Do not twist the steel wires and make sure the eyebolts have been firmly screwed and the sling angle is correct.

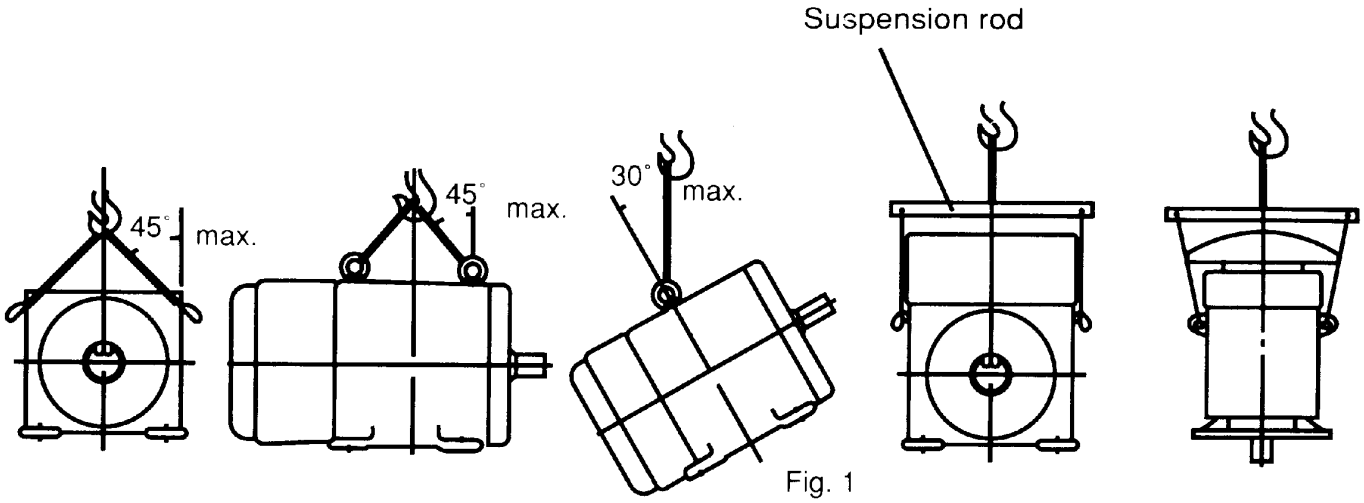

Fig. 1

3 INSTALLATION

Site and environment for motor installation

3.1.1

Standard environment and site conditions for the installation of motors are usually set as follows:

(a) Ambient temperature: -10~40ºC
(b) Humidity: Relative humidity below 90%RH for totally enclosed types, and below 80%RH for semi-enclosed types.
(c) Elevation: below 1000 meters or 3300 feet.
(d) Harmful gases, liquids, dusts, high moisture should be absent.
(e) Foundations should be strong and free of vibration.

If there are any special environmental conditions, please inform TWMC prior o ordering.

3.1.2 Ventilation and space

(a) Installation area should be well ventilated.
(b) The installation space should be large enough to facilitate heat dissipation and maintenance.

3.2 Foundation

3.2.1

Use rigid and solid sole plate or common bed as foundation.
For best motor performance, it is advisable to use a sole plate or common bed, particularly when using a shaft coupling.

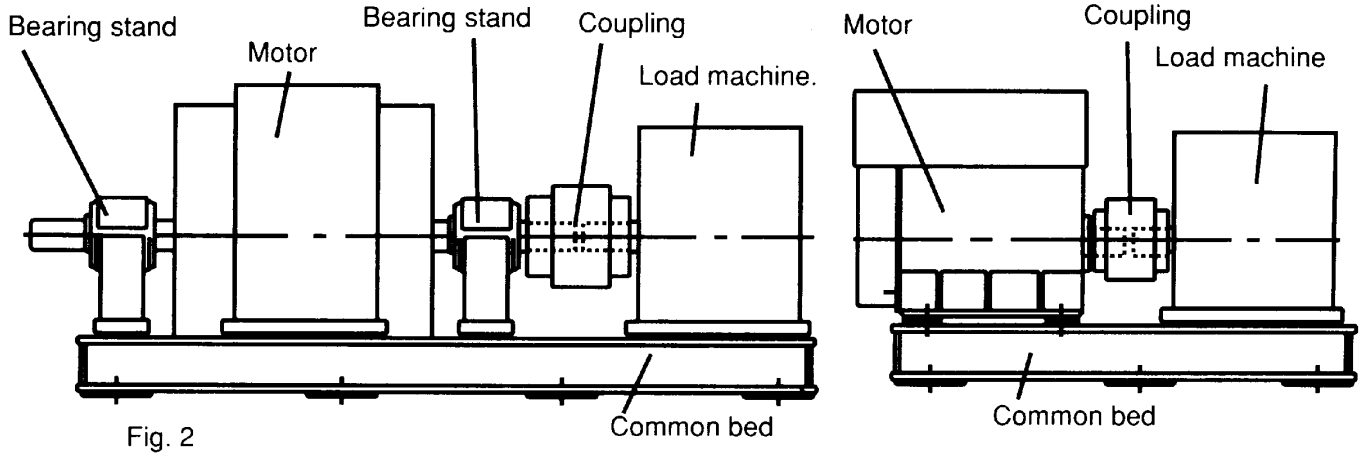

Fig. 2

3.2.2 Installation

(a) Select an appropriate foundation surface for the sole plate or common bed, which will be, considered the ultimate level.
(b) Align the position of the common bed with reference to that level.
(c) Align the level accuracy at least at four points such as bearing mounting, shaft extension etc. The accuracy should be within 0.04mm or .0015 inches
(d) Sole plate or common bed should be embedded in concrete foundation as illustrated in Fig. 3. Stiff pads should also be installed beneath the wedges, which are welded together at various spots about 400-500mm (15.75-19.70 inches) apart etc., to enable the foundation to carry evenly the weight of the whole motor.
(e) The base should be sturdy and rigid to keep it flat and level.
(f) Make sure the mortar and concrete are completely dry, and the precision of the level is acceptable, and then set the motor on the mounting foundation.
(g) Accurately install shaft couplings, belt sheaves etc., then weld the wedges solid to prevent untoward change in position.

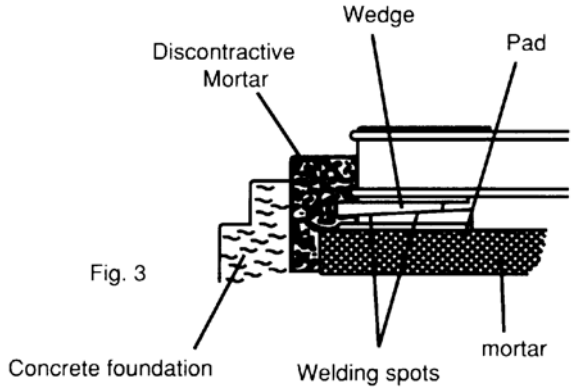

Fig. 3

3.2.3 The foundation of vertical induction motors: (Also the foundation of pump)

(a) Foundation of motor/pump must be rigid and secure to provide adequate support. There must be no vibration, twisting, misalignment etc. due to inadequate foundations.
(b) A massive concrete foundation is preferred in order to minimize vibration. Rigidity and stability are enhanced by prop plate and foundation bolt. As shown in Fig. 4.

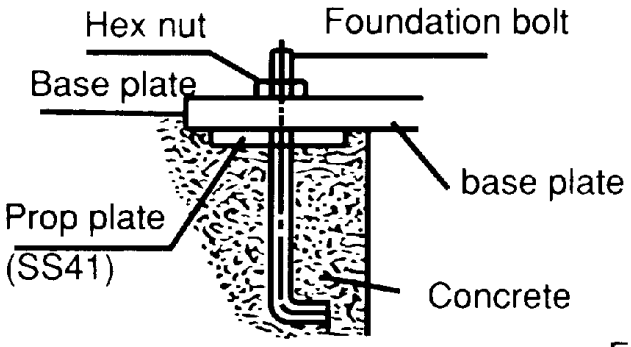

Fig. 4

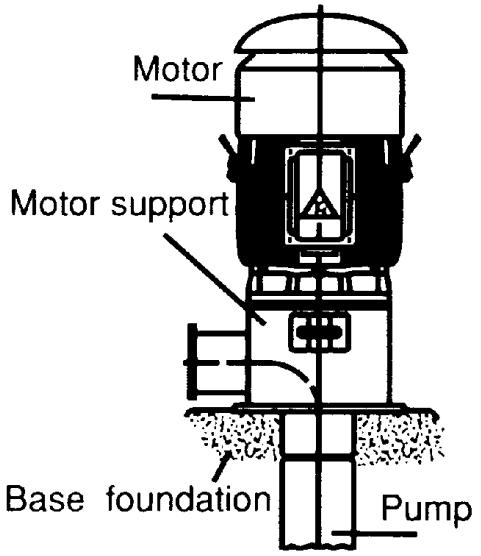

Fig. 5

3.2.4 Installation of vertical motors:

(a) All mounting surfaces must be clean and level.
(b) Foundation must be leveled at least at 4 points and guaranteed to be below 0.04mm (.0015 in.) flat and level.
(c) Make sure the mortar and concrete are completely dry, and the precision of the level is acceptable, and then set the motor on the mounting foundation.
(d) Accurately install shaft couplings.

3.3 Installation of shaft coupling

ATTENTION!
Motors must always be accurately aligned, and this applies especially where they are directly coupled.
Incorrect alignment can lead to bearing failure, vibration and even shaft fracture. As soon as bearing failure or vibration is detected, the alignment should be checked.

3.3.1
Field application of a coupling to the motor shaft should follow the procedures recommended by the coupling manufacturer. The motor shaft extension must not be subjected to either extreme heat or cold during coupling installation.

ATTENTION!
Basically, the coupling should be heated and pushed onto the shaft extension with slight axial force. Do not hammer coupling to prevent bearing damage.

3.3.2
Although the sleeve bearings are equipped with thrust faces, these are intended only to provide momentary axial restraint of rotor movement either during start-up or when operating the motor disconnected from the driven equipment. They must not be operated under a constant thrust load unless they were originally designed for this condition.

Motors with either sleeve or anti-friction bearings are suitable for connection to the driven load through a flexible coupling. Coupling solidly to the load is not acceptable. With sleeve bearings, the flexible coupling should be of the limited end float type to prevent the possibility of any end thrust from load being transmitted to the motor bearings, which could cause bearing damage. The recommended limits of end float are as follows:

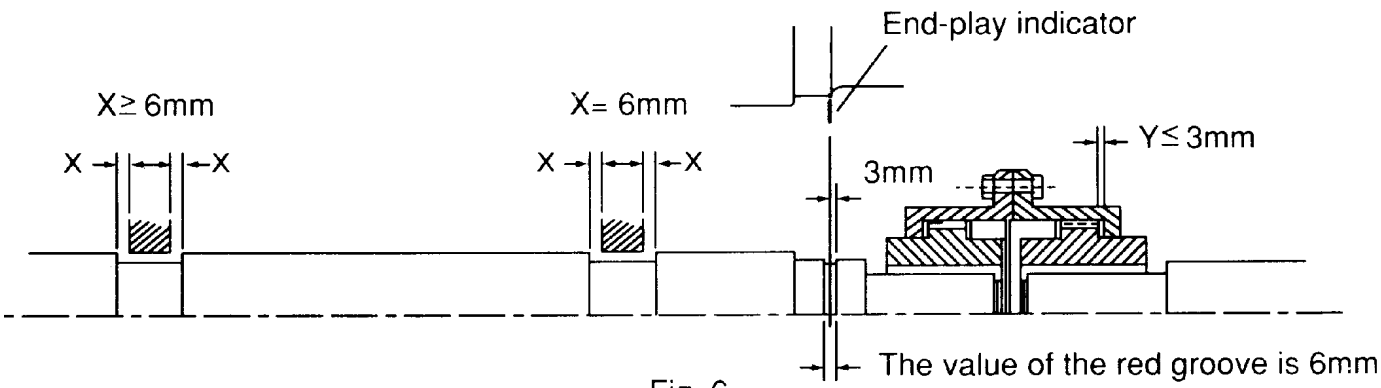

Fig. 6

(a) When the motor is in operation after installation, be sure that the end-play indicator is within the 6mm (.236 in.) of the groove on the shaft or aligned to the shaft shoulder immediately outboard of the drive-end bearing to assure there is low friction between shaft and bearing.

(b) Unless otherwise specified, the designed end-play value X of the groove for TWMC motors in general is within 6mm (.236 in.) as illustrated in Fig. 6. In essence, the endplay indicator is adjusted to point at the center of the groove or the drive-end shaft shoulder; thus X equals to 6±1mm or so, and the endplay value (Y) of the couplings should equal or be smaller than 3mm (.118 in.).

(c) If the desired value Y is grater than 3mmm (.118 in.) caused for instance by a thrust load and/or load machine with large end-play, please inform TWMC prior to entering an order.

3.3.3

In aligning the motor (and rotor) axially with the driven equipment, consideration should be given not only to the endplay indicator position but also to axial shaft expansion and increase in shaft centerline height due to thermal effects. In general, the axial shaft growth for motors can be disregarded since neither bearing is fixed and any shaft growth due to temperature increase will produce an elongation away from the coupling.

Shaft height growth (change in shaft centerline elevation) for TEFC machines can be calculated as follows:

$$\Delta = (0.0005") \times (\text{motor foot to shaft £ dimension})$$

For non-TEFC machines, divide the number by 2.

3.3.4

It is desirable, in normal operation that the motor operates on its magnetic center, so that no axial force is exerted on the coupling.

The motor shaft and the driven shaft should be aligned within the following tolerances in both angular and parallel alignment:

Unit: mm

TIR	Range of rotating speed	Solid coupling	Flexible coupling
C	2500 rpm and above	0.03	0.03
	Below 2500 rpm	0.04	0.05
A	2500 rpm and above	0.03	0.03
	Below 2500 rpm	0.03	0.04

Angular misalignment is the amount by which the centerlines of driver and driven shafts are skewed. It can be measured using a dial indicator set up as shown in Fig. 7. The couplings are rotated together through 360 degrees so that the indicator does not measure runout of the coupling hub face. The shafts should be forced against either the in or out extreme of their end float while being rotated.

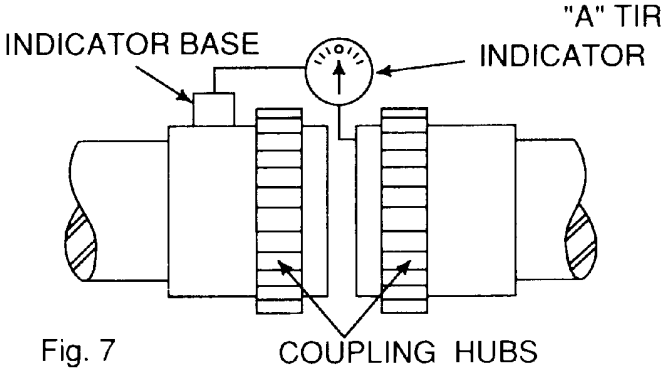

Fig. 7
TIR=Total indicator reading (by dial indicator)

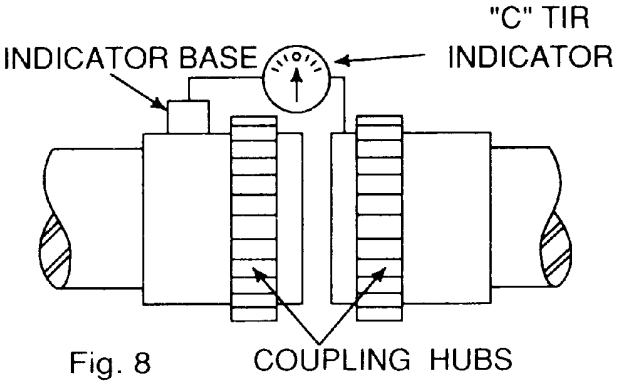

Fig. 8

Parallel misalignment is the amount by which the centerlines of the driver and driven shafts are out of parallel. It can be measured using a dial indicator set up as shown in Fig. 8. Again, the couplings are rotated together through 360 degrees so that the indicator does not measure runout of the coupling hub outside diameter.

3.3.5

After the motor has been properly aligned with the driven equipment and the hold-down bolts have been installed and tightened, for motors with fabricated frames, at least two dowel pins should be installed in two diagonally opposite motor feet.

3.3.6 Installation of shaft coupling: (Vertical hollow shaft motor only)

Bolted Coupling as shown in Fig. 9

(a) Bearings are provided to absorb some upward shaft thrust when the coupling is fitted.
(b) The coupling is fastened with bolts.
(c) This coupling type is not auto-release type.

Note: Standard high thrust motors can absorb momentary up-thrust load up to 30% of the standard down thrust load. If the up-thrust is long in duration (over 10 Seconds) and/or exceeds 30% of the standard high thrust rating, special design arrangements are required and standard motor is not suitable.

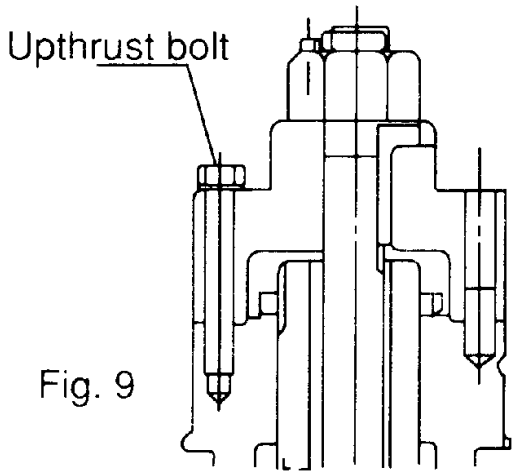

Fig. 9

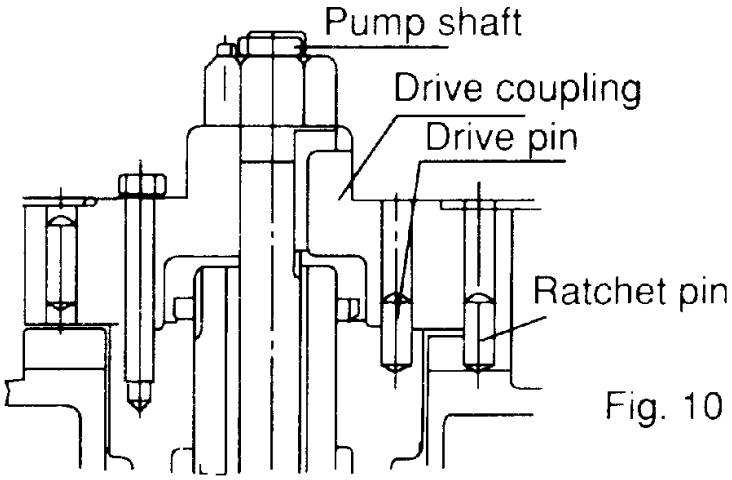

Fig. 10

3.3.7 Non-reverse ratchet/coupling, as Fig. 10 (If necessary)

The non-reverse coupling is also a bolted type and,

(a) It prevents the pump and motor from rotating in the reverse direction.
(b) It also prevents damage form over speeding and damage to pump shaft and bearings.
(c) The ratchet pins are lifted by the ratchet teeth and are held clear by centrifugal force and friction as the motor comes up to speed.
(d) When power is removed, speed decreases, and the pins fall. At the instant of reversal, a pin will catch in a ratchet tooth and prevent backward rotation.
(e) When installing the non-reverse coupling, do not use lubricant. Lubricant will interfere with proper operation. The top half of the coupling should seat solidly on the lower half and the pins should touch the bottom of the pockets between the teeth in the plate.
(f) As with the bolted coupling, the up-thrust capabilities are 30% of the standard high thrust rating for down thrust.

ATTENTION!
Do not apply non-reverse ratchets on applications in which the pump reversal time from shutdown (the instant the stop button is pressed) to zero speed is less than one second.

3.4 Installation for belt drive

In general, power transmission though direct flexible coupling is appropriate for large motors. Such motors are not suitable for belt, chain or gear connection unless specially designed for such service. However, for small and medium motors of which outputs within the ranges shown on table below, it is acceptable to use belt transmission as indicated. Beyond these ranges, do not apply belt sheaves unless specially designed.

3.4.1

The diameter ratio between conveyance sheaves should not be greater than 5 to 1 for flat belts, and 8 to 1 for V-belts. It is also advisable to limit the belt velocity to under 35m/sec (115 ft/sec) to limit belt abrasion and vibration. The smaller the outer diameter of the V-belt sheave, the greater the shaft bending stress will be. If the bending stress is in excess of the shaft fatigue stress, the shaft may break. Therefore, please inform TWMC when you have decided the size of the sheaves and the length of the belts upon ordering.

ATTENTION!
Place the sheave and belt as close as possible to the motor body (it is advisable to make x as shown in Fig. 11 equal to 0) to reduce the bending moment and improve shaft life.

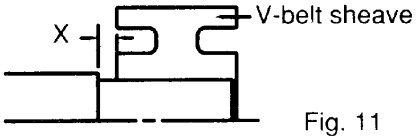

Fig. 11

3.4.2 Table of belt-sheave application for general electric motors

Output (KW/HP)			V-Belt Sheave							
			Conventional V-Belts				Narrow V-Belts			
4P	6P	8P	V-Belt Type	Number Of Belts	Min. PCD (mm)	Max Width (mm)	V-Belt Type	Number Of Belts	Min. PCD (mm)	Max Width (mm)
11/15	-	-	B	4	160	82	3V	4	125	48
-	11/15	-	B	5	170	101	3V	5	140	59
-	-	11/15	B	5	190	101	3V	6	160	69
15/20	-	-	B	5	170	101	3V	6	125	69
-	15/20	-	B	5	224	101	3V	6	160	69
-	-	15/20	C	4	224	111	5V	3	180	60
18.5/25	-	-	B	5	200	101	3V	6	140	69
-	18.5/25	-	C	4	224	111	5V	3	180	60
-	-	18.5/25	C	5	224	136	5V	4	180	78
22/30	-	-	B	5	224	101	5V	6	160	69
-	22/30	-	C	5	224	136	3V	4	180	78
-	-	22/30	C	5	250	136	5V	4	200	78
30/40	-	-	C	5	224	136	5V	4	180	78
-	30/40	-	C	5	265	136	5V	4	224	78
-	-	30/40	C	6	265	162	5V	5	224	95
37/50	-	-	C	6	224	162	5V	4	200	78
-	37/50	-	C	6	265	162	5V	4	224	78
-	-	37/50	C	7	280	187	5V	5	250	95
45/60	-	-	C	6	265	162	5V	4	224	78
-	45/60	-	C	7	280	187	5V	5	224	95
-	-	45/60	C	7	315	187	5V	6	250	113
55/75	-	-	C	7	265	187	5V	5	224	95
-	55/75	-	C	8	300	213	5V	6	250	113
-	-	55/75	D	5	355	196	5V	6	280	113
75/100	-	-	C	8	315	213	5V	6	250	113
-	75/100	-	D	6	355	233	5V	6	315	113
-	-	75/100	D	6	400	233	5V	6	355	113
-	90/120	-	D	6	400	233	5V	6	355	113
-	-	90/120	D	6	425	233	8V	4	355	124
-	110/150	-	D	7	400	270	8V	4	355	124
-	132/175	110/150	D	7	450	270	8V	4	400	124
-	160/200	132/175	D	9	450	344	8V	4	450	124

3.5 Conveyance with chain or gear

3.5.1

Make sure the loading capacity of shaft and bearings is appropriate for the size and installation position (overhung) of chain and gear. If necessary, please contact us to ensure the shaft and bearings will meet your requirements.

3.5.2
Pay close attention to ensure the parallelism of shafts.

3.5.3
The teeth of couplings should be correctly and precisely matched; the force conveyance centers should lie on the same line.

3.5.4
There should be no skip, jumping, vibration or unusual noises.

ATTENTION!
Do not hammer the conveyance devices such as couplings, belt sheaves, chain wheels, gears etc. onto the shaft. Those shaft fitments should be fitted and removed only by means of suitable devices. Heat shrinking may be a better alternative to avoid damaging bearings and components.

The exposed rotating parts should be covered to prevent accidents.

3.6 Electrical connections
All interconnecting wiring for controls and grounding should be in strict accordance with local requirements such as the USA National Electrical Code and UK IEE wiring regulations. Wiring of motor and control, overload protection and grounding should follow the instructions of connection diagrams attached to the motor.

3.6.1 Power
The rated conditions of operation for the motor are as shown on the nameplate. Within the limits, given below, of voltage and frequency variation from the nameplate values, the motor will continue to operate but with performance characteristics that may differ from those at rated conditions:

±10% of rated voltage
±5% of rated frequency
±10% combined voltage and frequency variation so long as frequency variation is no more than ±5% of rated.

Operating the motor at voltages and frequencies outside of the above limits can result in both unsatisfactory motor performance and damage to or failure of the motor.

3.6.2
The main lead box furnished with the motor has been sized to provide adequate space for the make-up of the connections between the motor lead cables and the incoming power cables.

The bolted joints between the motor lead and the power cables must be made and insulated in a workman-like manner following the best trade practices.

3.6.3
Either fabricated motors or fan cooled cast frame, motors are all provided with grounding pads or bolts.

The motor must be grounded by proper connection to the electrical system ground.

3.6.4
The rotation direction of the motor will be as shown by either a nameplate on the motor or the outline drawing. The required phase rotation of the incoming power for this motor rotation may also be stated. If either is unknown, the correct sequence can be determined in the following manner: While the motor is uncoupled from the load, start the motor and observe the direction of rotation. Allow the motor to achieve full speed before disconnecting it from the power source. Refer to the operation section of these instructions for information concerning initial start-up. If resulting rotation is incorrect, it can be reversed by interchanging any two (2) incoming cables.

3.6.5 Auxiliary devices
Auxiliary devices such as resistance temperature detectors, thermocouples, thermoguards, etc., will generally terminate on terminal blocks located in the auxiliary terminal box on the motor. Other devices may terminate in their own enclosures elsewhere on the motor. Such information can be obtained by referring to the outline drawing. Information regarding terminal designation and the connection of auxiliary devices can be obtained from auxiliary drawings or attached nameplates.
If the motor is provided with internal space heaters, the incoming voltage supplied to them must be exactly as shown by either a nameplate on the motor or the outline drawing for proper heater operation.

Caution must be exercised anytime contact is made with the incoming space heater circuit as space heater voltage is often automatically applied when the motor is shutdown.

4. OPERATION

4.1 Examination before start

4.1.1
When motors are installed in good manner, ensure the wiring is according to the diagram. Also, the following points should be noted:

(a) Make sure all wiring is correct.
(b) Ensure the sizes of cable wires are appropriate and all connections are well made for the currents they will carry.
(c) Ensure all connections are properly insulated for the voltage and temperature they will experience.
(d) Ensure the capacity of fuses, switches, magnetic switches and thermo relays etc. are appropriate and the contactors are in good condition.
(e) Make sure the frame and terminal box are grounded.
(f) Make sure that the starting method is correct.
(g) Make sure switches and starters are set at their right positions.
(h) Motor heaters must be switched off when the motor is running.

4.1.2 Measurement of insulation resistance

During and immediately after measuring, the terminals must not be touched as they may carry residual dangerous voltages. Furthermore, if power cables are connected, make sure that the power supplies are clearly disconnected and there are no moving parts.

(a) For rated voltage below 1000V, measured with a 500VDC megger.
(b) For rated voltage above 1000V, measured with a 1000VDC megger.
(c) In accordance with IEEE 43, clause 9.3, the following formula should be applied:

$$R \geq \left(\frac{\text{Rated voltage (v)}}{1000} + 1 \right) \times 10 (M\Omega)$$

(d) On a new winding, where the contaminant causing low insulation resistance is generally moisture, drying the winding through the proper application of heat will normally increase the insulation resistance to an acceptable level. The following are several accepted methods for applying heat to the winding:
   (1) If the motor is equipped with space heaters, they can be energized to heat the winding.
   (2) Direct current (as from a welder) can be passed through the winding. The total current should not exceed approximately 50% of rated full load current. If the motor has only three leads, two must be connected together to form one circuit through the winding. In this case, one phase will carry the fully applied current and each of the others, one-half each. If the motor has six leads (3 mains and 3 neutrals), the three phases should be connected into one series circuit.

Ensure there is adequate guarding so live parts cannot be touched.

   (3) Heated air can either blown directly into the motor or into a temporary enclosure surrounding the motor. The source of heated air should preferably be electrical as opposed to fueled (such as kerosene) where a malfunction of the fuel burner could result in carbon entering the motor.

ATTENTION!
Caution must be exercised, when heating the motor with any source of heat other than self contained space heaters, to raise the winding temperature at a gradual rate to allow any entrapped moisture to vaporize and escape without rupturing the insulation. The entire heating cycle should extend over 15-20 hours.

Insulation resistance measurements can be made while the winding is being heated. However, they must be corrected to 40ºC for evaluation since the actual insulation resistance will decrease with increasing temperature. As an approximation for a new winding, the insulation resistance will approximately halve for each 10ºC increase in insulation temperature above the dew point temperature.

(e) Should the resistance fail to attain the specified value even after drying, careful examination should be undertaken to eliminate all other possible causes, if any.

4.1.3 Power Source

(a) Ensure the capacity of the power source is sufficient.
(b) Ensure the supply voltage and frequency ratings are identical to those on the nameplate.
(c) Voltage variation should be confined to within ±10% of the rated value and the phase to phase voltages should be balanced.

4.1.4 Bearing lubrication

(a) For sleeve bearing motors, the oil reservoir must be filled with oil to the correct level. On self-lubricated bearings, the standstill oil level will be at the center of the oil gauge. The proper oil is a rust and oxidation inhibited, turbine grade oil. Refer to the lubrication nameplate for the recommended viscosity.

(b) Motors, which are supplied with provision for flood lubrication, have an inlet orifice to meter the oil flow to the bearing. Refer to the outline drawing for these values. If the supply pressure does not match that stated on the outline, the orifice size must be adjusted to produce the specified flow rate. The drain adapter (also provided) has a weir plate fixed to the inside of the pipe to permit the establishment of the proper oil level. This weir plate must be located at the bottom of the pipe and must be parallel to the plane of the motor feet. To ensure optimum flow, the drain line should be vented to the atmosphere.

Oil inlet temperature:	Normal below 50ºC
	Alarm 60ºC
	Trip 65ºC

(c) If the motor is in storage for over three (3) months, refilling of some new oil should be undertaken before operation to prevent bearing damage due to dry friction. The oil level should be kept at the center of the oil gauge. If necessary, drain some oil after refilling.

(d) Motors that have been designed with anti-friction bearings for use with an oil mist lubrication system have been packed at the factory with a small amount of grease for short test runs. Continuous running should not be considered unless the oil mist system is installed and operating.

(e) Grease lubricant type

(1) The bearings have been well greased at the factory before delivery. However, regreasing is required if a significant period has elapsed between manufacture and use or in storage

(2) All motors with ZZ bearings will have SHELL Alvania R3 (*Lithium base grease*). All motors with open bearings will have Polyrex EM (polyurea base grease).

4.1.5 Cooling water for the cooler on water-cooled motors

Make sure the quality, volume and inlet temperature of cooling water for the motors are normal before the machine is in operation.

Water:	General tower water or industrial water.
Volume:	Please see outline drawing
Inlet temperature:	Normal below 30ºC
	Alarm 35ºC
	Trip 40ºC

ATTENTION!
Make sure all locks, which fasten the movable parts of the motors during transportation, are dismantled and the shaft can rotate freely.

ATTENTION!
Ensure there is no foreign matter or tools inside the motors before starting motors.

4.1.6
Make sure the transmission system, including belts, screws, bolts, nuts and set pins are in good condition.

The keys fitted to the shaft extensions are held by plastic tape only to prevent them from falling out during transportation or handling. The shaft key shall be removed to avoid flying out, when the motor is operated prior to the couplings etc. being fitted to the shaft extension.

4.1.7
Make sure the items above are examined. Test the motor running with or without load. Record and check according to "Maintenance" at 15-minute intervals during the first three hours of operation. Then regular examinations should take place at longer intervals. If all goes well the motor can be classified as "in good order".

4.2 Starting operation

4.2.1 Starting load
Initially run the motor unloaded prior to coupling to other machines. Unless otherwise specified, a motor usually starts with light load, which is then gradually increased, proportional to the square of the speed and at last reaches 100% load at full load speed.

4.2.2 Starting
Too frequent starts can be harmful to the motors. The following restrictions should be observed:

(a) Motor can be restarted should the initial start fail. Two starts are generally permissible when the motor is cold.
(b) Motor can be started only once when it is at normal running temperature.
(c) Should additional starts be necessary beyond the conditions stated above, the following restrictions should be noted:
    (1) Let the motor cool down for 60 minutes before restarting, fully loaded.
    (2) Let the motor cool down for 30 minutes before restarting, unloaded.
    (3) Two inching starts can be regarded as one normal start.

ATTENTION!
If the motor rotor fails to start turning within one or two seconds, shut off the power supply immediately.
Investigate thoroughly and take corrective action before attempting a restart.

Possible reasons for not starting are:
(1) Too low a voltage at the motor terminals.
(2) The load is too much for the rotor to accelerate.
(3) The load is frozen up mechanically.
(4) All electrical connections have not been made.
(5) Single-phase power has been applied.
(6) Any combination of the above.

4.2.3 Rotating direction

(a) Most TWMC motors are bi-directional. However, when some special types, such as high speed 2-Pole, certain large capacity motors, those with a non-reversing ratchet etc., should rotate in one direction, please ensure the rotation is in conformity with the directional arrow-mark shown on the attached nameplate.

(b) To reverse a bi-directional motor, cut the power and wait until the motor stops. Then interchange any two of the three phases.

4.2.4 Power source, Voltage, Current

(a) Ensure the voltage and frequency of the power source are identical to the ratings shown on the nameplate.

(b) Voltage variation should be confined to within ±10% of the rating and the three phase voltages should be in full balance

(c) Ensure the motor phase currents, when without load, are within ±5% of the average values.

4.2.5

Frequency variation should be confined to within ±5% of the rating. The aggregate variation of voltage and frequency should be confined to within ±10% of the absolute value of the ratings.

Starting time and unusual noises

ATTENTION!
Starting time is longer for the motors with large inertia. However, if starting time is longer than usual or if there is difficulty in starting, or there is abnormal noise, do not run the motor and refer to TWMC Service representative.

4.2.6 Sleeve bearing oil rings (sleeve bearing types only)

As the oil ring is used to carry lubricant to sleeve bearings, frequently check to ensure the oil ring is in motion.

4.2.7 Bearing temperature rise

Following the initial start-up, the bearing temperatures should be closely monitored. The rate of rise in bearing temperature is more indicative of impending trouble than is the actual temperature.

ATTENTION!
If the rate of rise in temperature is excessive or if the motor exhibits excessive vibration or noise, it should be shut down immediately and a thorough investigation made as to the cause before it is operated again.

If the bearing temperature rise and motor operation appear to be normal, operation should continue until the bearing temperature stabilizes.

Recommended limits on bearing temperature are as follows:

Sleeve Bearings	**Total measured temperature**
● By permanently installed detector	90ºC
● By temporary detector on top of the bearing sleeve near the oil ring	85ºC

Anti-Friction Bearings	Total measured temperature
● By permanently installed detector	100ºC
● By temporary detector measuring the outside of the bearing housing	95ºC

ATTENTION! (For sleeve bearing)

(1) It must be noted that when operating flood lubricated sleeve bearings without outside lubrication supplied, the bearing temperature must not be allowed to exceed 85ºC total temperature

(2) Under normal condition, for the self-lube bearing, the rate of temperature rise should be from 11 to 14ºC for the first ten (10) minutes after starting up and approximately 22ºC at thirty (30) minutes. The rate of bearing temperature rise is a function of the natural ventilation and operating conditions.

(3) When the rate of bearing temperature rise is less than 1ºC per half-hour, the bearing temperature is considered to be stabilized.

(4) If the total bearing temperature exceeds 95ºC, the motor should be shut down immediately.

Noise and Vibration

ATTENTION!
Any abnormal noise or vibration should be immediately investigated and corrected. Increased vibration can be indicative of a change in balance due to mechanical failure of a rotor part, a stator winding problem or a change in motor alignment.

5. MAINTENANCE

5.1 Major points in regular inspections and maintenance.

For safety, maintenance and repairs must only be carried out by properly trained personnel.

Some testing, such as insulation resistance, usually requires the motor to be stopped and isolated from power supplie(s).

Routine inspection and maintenance are usually performed by looking, listening, smelling and simple meters.

High temperature may arise under operating conditions on the motor surfaces, so that touching should be prevented or avoided. Keep away from moving and live parts. Unless deemed necessary, do not remove guards whilst assessing the motor.

Timely replacement of worn parts can assure longevity and prevent breakdown.

Routine inspection and regular inspection and maintenance are important in preventing breakdown and lengthening service life.

Owing to the varied time and circumstances, motors are used, it is difficult to set the items and periods for regular inspection and maintenance. However, as a guide it is recommended to be performed periodically according to factory maintenance program. Generally, the inspection scope determined by the following factors:

(a) Ambient temperature.
(b) Starting and stopping frequency.
(c) Troublesome parts usually affecting motor functions.
(d) Easily abraded parts.
(e) The important position of motor in the operational system of a factory should be duly recognized. Therefore, its health and wellbeing should be fully protected especially when it is operating in severe conditions.

5.2 Motor windings:

(a) Measurement of insulation resistance and standards to determine quality of insulation resistance, please refer to measures stated in 3.1.2 “Measurement of insulation resistance”.
(b) Inspection of coil-ends:
  (1) Grease and dust accumulated on coils may cause insulation deterioration and poor cooling effect.
  (2) Moisture must not accumulate. Keep coils warm when motor is not in use if moisture can be seen.
  (3) Discoloring. This is mainly caused by overheating.
(c) Ensure no untoward change of wedges from original position.
(d) Ensure the binding at the coil end is in its normal position.

5.3 Clean the interior of the motor:

(a) After a motor is in operation for some time, accumulation of dust, carbon powder and grease etc., on the inside is unavoidable, and may cause damage. Regular cleaning and examination is necessary to assure top performance.
(b) Points to note during cleaning:
  (1) If using compressed air or blower:
    (a) Compressed air should be free of moisture.
    (b) Maintain air pressure at 4 kg/cm², since high pressure can cause damage to coils.
  (2) Vacuum
    Vacuum cleaning can be used, both before and after other methods of cleaning, to remove loose dirt and debris. It is a very effective way to remove loose surface contamination from the winding without scattering. Vacuum cleaning tools should be non-metallic to avoid any damage to thee winding insulation
  (3) Wiping
    Surface contamination on the winding can be removed by wiping using a soft, lint-free wiping material. If the contamination is oily, the wiping material can be moistened (not dripping wet) with a safety type petroleum solvent. In hazardous locations, a solvent such as inhibited methyl chloroform may be used, but must be used sparingly and immediately removed. While this solvent is non-flammable under ordinary conditions, it is toxic and proper health and safety precautions should be followed while using it.

ATTENTION!
Solvents of nay type should never be used on windings provided with abrasion protection. Abrasion protection is a gray, rubber-like coating applied to the winding end-turns.

Adequate ventilation must always be provided in any area where solvents are being used to avoid the danger of fire, explosion or health hazards. In confined areas (such as pits) each operator should be provided with an airline respirator, a hose mask or a self-contained breathing apparatus. Operators should wear goggles, aprons and suitable gloves. Solvents and their vapors should never be exposed to open flames or sparks and should always be stored in approved safety containers.

(4) Keep core ducts completely clean. The difference in temperature rise could be around 10°C before and after cleaning

5.4 Clean the exterior of the motor:

(a) On open ventilated motors, screens and louvers over the inlet air openings should not be allowed to accumulate any build-up of dirt, lint, etc. that could restrict free air movement.

ATTENTION!
Screens and louvers should never be cleaned or disturbed while the motor is in operation because any dislodged dirt or debris can be drawn directly into the motor.

(b) If the motor is equipped with air filters, they should be replaced (disposable type) or cleaned and reconditioned (permanent type) at a frequency that is dictated by conditions. It is better to replace or recondition filters too often than not often enough.

(c) Totally enclosed air to air cooled and totally enclosed fan cooled motors require special cleaning considerations. The external fan must be cleaned thoroughly since any dirt build-up not removed can lead to unbalance and vibration. All of the tubes of the air-to-air heat exchanger should be cleaned using a suitable tube brush having synthetic fiber bristles (not wire of any type).

5.5 Maintenance of anti-friction bearings

5.5.1 Frequency of re-lubrication:

The life of grease varies greatly as a result of types of model, revolution speed, temperature, operational conditions etc. It is, therefore, impossible to be precise about replenishment intervals. However, for normal direct coupling transmission, the periods shown as Table 1 may be used as a guide.

Remarks:

(a) The periods shown in Table 1 should be halved where bearings are used for belt drive and/or in dirty or high ambient temperature or high humidity environments.

(b) Please refer to the lubrication nameplate, if attached to the motor.

(c) For bearing numbers outside the range of Table 1, please contact TWMC

(d) If the periods referred to in Table 1 for drive-end bearing and opposite drive-end are different, for the convenience of maintenance operation, please take the shorter one the required grease replenishment period of these bearings.

5.5.1 Kinds of grease:

All motors with ZZ bearings will have SHELL Alvania R3 (lithium base grease). All motors with open bearings will have Polyrex EM (polyurea base grease).
Certain T-frame models will utilize special grease and will be noted on the lubrication nameplate. Please us identical grease or its equivalents when maintaining lubrication schedule.

ATTENTION!
Do not mix different kinds of grease.
Mixing grease with different type of thickeners may destroy its composition and physical properties. Even if the thickeners are of the same type, possible differences in the additive may cause detrimental effects.

5.5.2 Grease quantity

The amount of grease per replenishment depends on the type, size and construction of the bearings. The maximum amount of one replenishment for each bearing is shown in Table 2.

5.5.3 Re-greasing

If re-lubrication is to be performed when the motor is running, stay clear of rotating parts.

It is advisable to re-grease when the motor is running to allow the new grease to be evenly distributed inside the bearing.
Before re-greasing, the inlet fitting should be thoroughly cleaned to prevent any accumulated dirt from being carried into the bearing with the new grease. The outlet of grease drainage should be opened to allow the proper venting of old grease.

Use a grease gun to pump grease through grease nipple into the bearings. After re-greasing, operate the motor for 10-30 minutes to allow any excess grease to vent out.

TABLE 1.

Bearing Number		600 RPM	720 RPM	750 RPM	900 RPM	1000 RPM	1200 RPM	1500 RPM	1800 RPM	3000 RPM	3600 RPM
62XX 63XX 72XX 73XX	6210										
	12									2000 Hrs.	
	13										
	14									1000 Hrs.	
	15										
	16									720 Hrs.	
	17							2000 Hrs.			
	18			3000 Hrs.							
	20										
	22										
	24							1500 Hrs.			
	26										
	28					2000 Hrs.		1000 Hrs.			
	30										
	32							500 Hrs.			
	34					1500 Hrs.					
	36										
	38			2000 Hrs.		1000 Hrs.					

Bearing Number		600 RPM	720 RPM	750 RPM	900 RPM	1000 RPM	1200 RPM	1500 RPM	1800 RPM
NU2XX NU3XX	NU214								
	15							2000 Hrs.	
	16								
	17								
	18			3000 Hrs.				1500 Hrs.	
	20								
	22							1000 Hrs.	
	24								
	26					2000 Hrs.			
	28							500 Hrs.	
	30								
	32								
	34			2000 Hrs.		1000 Hrs.			
	36								
	38	2000 Hrs.							
	40								
	44			1000 Hrs.					
	48	1000 Hrs.							

Bearing Number		600 RPM	720 RPM	750 RPM	900 RPM	1000 RPM	1200 RPM	1500 RPM	1800 RPM
222XX 223XX	22220							300 Hrs.	
	22								
	24		1000 Hrs.			500 Hrs.			
	26								
	28								
	30					300 Hrs.			
	32			500 Hrs.					
	34								
	36								
	38	500 Hrs.							
	40			300 Hrs.					
	44								
	48	300 Hrs.							

TABLE 2.

Bearing No.		Amount of replenishment
62XX 72XX NU2XX 2222XX	6210	30 g
	6212	40
	6213	50
	6214	50
	6215	60
	6216	60
	6217	80
	6218	80
	6220	100
	6222	120
	6224	120
	6226	140
	6228	160
	6230	180
	6232	200
	6234	250
	6236	300
	6238	350
	6240	400
	6244	450
	6248	500

Bearing No.		Amount of replenishment
63XX 73XX NU223XX 223XX	6310	40 g
	6312	60
	6313	80
	6314	80
	6315	100
	6316	100
	6317	120
	6318	120
	6320	160
	6322	220
	6324	270
	6326	300
	6328	400
	6330	450
	6332	500
	6334	600
	6336	700
	6338	800
	6340	900
	6344	900
	6348	900

*Fill new grease until it overflows and the old grease is entirely replaced.

5.5.4 Oil re-lubrication (For oil lubrication types only)

Maintain proper lubrication by checking the oil level periodically and adding oil when necessary. Because of the initial clearing action of the bearing and the expansion of the oil as it comes up to operating temperature, the oil level will be higher after the motor has been in operation for a while than it is with the motor at standstill.

Overfilling should be avoided not only because of the possibility that expansion may force the oil over the oil sleeve and on to the rotor, but also because too high an operating oil level prevents the bearing form clearing itself of excess oil. The resultant churning can cause extra loss, high temperatures, and oxidized oil. If, during operation, the oil level goes above the maximum shown on the sight gauge, drain enough oil to bring the level back within the recommended operating range. **Do not permit the operating level to fall below the minimum shown on the gauge.**

ATTENTION!
Should it ever become necessary to add excessive amount of make-up oil, investigate immediately for oil leaks.

Change the oil at regular intervals. The time between oil changes depends upon the severity of operating conditions and, hence, must be determined by the motor user. Two or three changes a year is typical, but special conditions, such as high ambient temperature, may require more frequent changes. Avoid operating the motor with oxidized oil.

Use only good grade, oxidation-corrosion-inhibited turbine oils produced by reputable oil companies.

The viscosity of the oil to be used depends upon the type and size of the bearings, its load and speed, the ambient temperature, and the amount and temperature of the cooling water (if used)). The lubrication nameplate or instructions with each motor specifies the viscosity range of oil suitable for average conditions. The usual oil viscosity range of oil suitable for average conditions. The usual oil viscosity recommendations are summarized in Table 3. Operation in ambient temperatures that are near or below freezing may require preheating the oil or the use of special oil. Whenever the motor is disassembled for general cleaning and reconditioning, the bearing housing may be washed out with a suitable cleaning solvent. Be sure that the oil-metering hole is clear, and then dry the housing thoroughly before re-assembly, and ensure all traces of cleaning solvent have been removed.

TABLE 3 Oil Viscosity**

Bearing function and location	Bearing Type	Oil Viscosity - SSU	
		@ 100°F	@ 200°F
Thrust Bearing	72XX, 73XX Angular contact ball And/or (62XX, 63XX)	150	45
	Spherical roller	300	53
	Plate (Kingsbury Type)	300	53

**Remark: When a lubrication nameplate attached to the motor, use lubrication oil it stipulates.

5.5.5 Cleaning and installation of bearings

(a) Apply the proper amount of grease to the disassembled parts of the bearing after they have been thoroughly cleaned with high quality cleaning oil. Then protect them from contamination before and during assembly.

(b) Bearing installation

ATTENTION!
Before installing the bearings, make sure that the shaft mounted parts inside the bearings are in place before installation.

Since the bearing is a high precision component, it is important to avoid ingression of dust and foreign matter, and hammering during cleaning and installation. Use extreme care and insure clean conditions during installation and assembly.

ATTENTION!
The best way for bearing installation is heat shrinking. Knocking and hammering during installation should be avoided absolutely.

The bearing should be heated in a bath of clean oil at a temperature of approximately 80°C. After warming, slide the bearings in place quickly and nimbly so that it has not shrunk before being fully in position.
Grease the bearing after the temperature returns to normal, and then reassemble the motor.

5.6 Maintenance of sleeve bearings

5.6.1 Daily inspections

(a) Ensure the volume and quality of lubrication oil are in compliance with specifications.

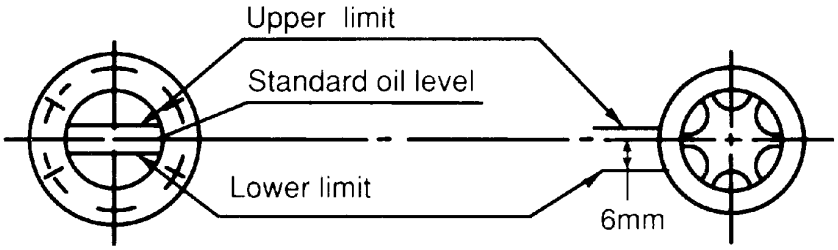

Fig. 12

(b) Ensure there is motion of the oil ring and it is not clamped.

(c) The indicator of the shaft endplay should be restricted within the specified range of the red groove of the shaft or the ±3mm (.118 in.) range of the drive-end shaft shoulder, or the bearing may be damaged.

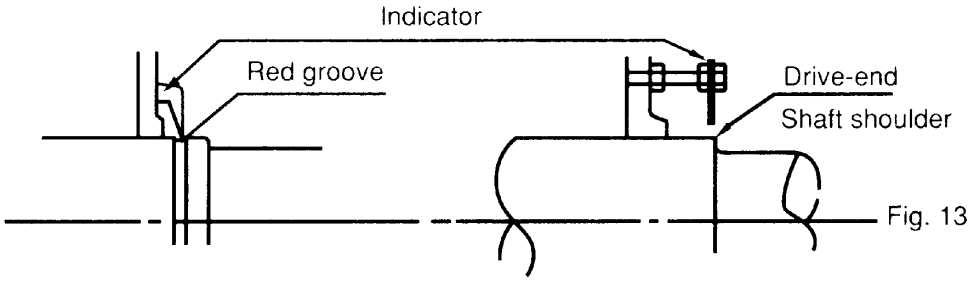

Fig. 13

5.6.2 Regular examination

(a) Periodical change of oil

The oil reservoirs of self (not flood) lubricated bearings should be drained and refilled about every six (6) months. More frequent changes may be needed on high speed (3600 rpm) motors or if severe oil discoloration or contamination occurs. In conditions where contamination does occur, it may be advisable to flush the reservoir with kerosene to remove any sediment before new oil is added. Proper care must be taken to thoroughly drain the reservoir of the flushing material before refilling with the new oil.

Refill the reservoir to the center of oil sight glass with a rust and oxidation inhibited turbine grade oil. Refer to the outline and lubrication nameplate for the correct viscosity.

(b) Quantity of lubrication oil

Please refer to the lubrication nameplate for oil quantity.

(c) Oil viscosity

(d)

ISO	Equivalents	Viscosity (SUS/100°F)
VG32	Esso Teresso 32	150
VG46	Esso Teresso 46	200
VG68	Esso Teresso 68	300

5.6.3 Disassembly

Prior to disassembling, ensure the power supplies are disconnected and there are no moving parts.

The bearing sleeve is of the spherically seated, self-aligning type. The opposite drive end bearing is normally insulated for larger motors (or when specified). On some motors, the insulation is bonded to the spherical seat of the bearing housing.

ATTENTION!
Extreme care must be exercised in removing the bearing sleeve from the insulated support to avoid damaging this insulation.

The following is the recommended procedure for removing the bearing sleeve:

(a) Remove the oil drain plug in the housing bottom and drain the oil sump.

(b) Remove all instrumentation sensors that are in contact with the bearing sleeve. These would include resistance temperature detectors, thermocouples, thermometers, etc..

(c) Remove the socket head bolts holding the bearing cap and the inner air seal. The end cover plate must also be removed if the non-drive end bearing is being disassembled. Remove the bearing cap and top half of the inner air seal. Place them on a clean, dry surface to avoid damage to the parting surfaces.

(d) Remove the top half of the bearing sleeve using suitable eyebolts in the tapped holes provided. Lift the bearing top straight up and avoid any contact with the shoulders of the shaft journals that might damage the thrust faces of the bearing. Place on a clean, dry surface taking care to prevent damage to either the parting surfaces or the locating pins that are captive n the top bearing half.

(e) Remove the screws at the partings in the oil ring and dismantle the ring by gently tapping the dowel pin ends with a soft face mallet. Remove the ring halves and immediately reassemble them to avoid any mix up I parts or damage to the surfaces at the partings.

(f) Pull up on the garter spring surrounding the floating labyrinth seal and carefully slip out the top half. Rotate the garter spring until the lock is visible. Twist counter-clockwise to disengage the lock, remove the garter spring then rotate the lower half of the seal out of the groove in the bearing housing. Note the condition of these floating labyrinth seals. If they are cracked or chipped, they must be replaced. Do not attempt to reuse a damaged seal.

(g) To remove the bottom bearing half, the shaft must be raised a slight amount to relieve pressure on the bearing. On the drive end, this can be done by jacking or lifting on the shaft extension. Protect the shaft. On the non-drive, jacing or lifting can be done using bolts threaded into the tapped holes provided in the shaft end.

(h) Roll the bottom bearing half to the top of the shaft journal and then lift it using suitable eyebolts threaded into the holes provided. Again avoid any contact with the shaft shoulders that could damage the bearing thrust faces. Place the lower bearing half on a clean, dry surface to protect the parting surfaces.

Use extreme care when rolling out the lower bearing half. Keep the hands and fingers well clear of any position where they might be caught by the bearing half if it were accidentally released and rotated back to its bottom position. Serious personal injury could result.

(i) Protect the shaft journal by wrapping it with clean, heavy paper or cardboard.

5.6.4 Re-assembly

Bearing re-assembly is basically a reverse of the disassembly procedures outlined above, with the following suggestions:

(a) The interior of the bearing housing should be cleaned and then flushed with clean oil or kerosene.

(b) The bearing halves and the shaft journal should be wiped clean using lint-free cloth soaked with clean oil.

(c) All parts should be carefully inspected for nicks, scratches, etc., in any contract surfaces. Such imperfections should be removed by an appropriate method such as stoning, scraping, filling, etc., followed by thorough cleaning.

(d) Before installing the floating labyrinth seal halves, observe their condition. Do not attempt to use a cracked or chipped seal. The bottom half seal has a set of drilled holes in its side face. These must be place at the bottom toward the inside of the bearing so that accumulating oil may drain back into the housing.

(e) Put a bead of Curil-T around the seal half O.D.'s on both sides adjacent to the garter spring groove. This will prevent oil by-passing the seal around its outside.

(f) Place the bottom seal half on top of the shaft and roll it into position. Install the top half and insert the garter spring pulling up on both ends to permit engaging the lock. Run a bead of Curil-T around the O.D's on both sides adjacent to the garter spring groove on this half also.

(g) Carefully reassemble the two oil ring halves. Inspect the dowel pins for burrs and straightness and make any corrections required. Do not force the ring halves together. Excessive force may alter the roundness or flatness of the oil ring which can change its oil delivery performance.

(h) Some of the pipe plugs in the housing are metric thread type. These are identified as those, which have a copper, lead, or similar material washer. If these plugs are removed,

be careful not to lose the washers. Before re-assembly, inspect the washers and replace them as required.

(i) Before installing the bearing cap, observe the position of the floating labyrinth seal. The "tab" must be on top to engage the pocket. Failure to position the seal properly will result in damage when the cap is assembled.

ATTENTION!
(1) Curil-T is the only approved compound for use in the assembly of the bearings on this motor. Other products may harden and impede the operation.
(2) During the re-assembly of the bearing parts, a thin layer of Curil-T should be applied to all gaskets and machined interface surfaces. This suggestion does not apply to the machined surfaces of the bearing liner halves.
(3) When seating the bearing shell, apply a thin layer of lube oil at the spherical surface of the liner. Slowly roll the lower bearing liner into the bearing housing making sure that the splinted surface of the liner and the housing are flush. Gradually lower the shaft onto the bearing. The weight of he shaft will help rotate the bearing liner so that the babbitt surface of the liner will match the slope of the journal. Sometimes it is required to use a rubber mallet to tap lightly on the bearing housing while slowly rolling the shaft to help this seating operation.

5.7 Maintenance of slip ring (For Wound Rotor Motors only)

Ensure motor is disconnected from power supplies and there are no accessible moving parts before maintenance operation.

5.7.1 Adjustment of carbon brush

(a) Brush pressure for normal operation:
- Electro-graphite brush…..0.2~0.25 kg/cm²
  When frequent vibrations are evident or the brush is small (area below 0.5 cm²), the pressure should be greater than as shown.

(b) Adjustment of brush pressure:
The brush pressure should be adjusted to keep normal operation as it wears.
- The brush pressure may be reduced after use, so it is necessary to re-adjust. For adjustment, please turn adjusting screw, pressure adjusting pin or pressure adjusting plate as shown in Fig. 14 to obtain the correct tension (=0.23 x brush cross sectional area in cm²) ±10% kg.

(c) Brush pressure need not be adjusted if constant force spring is used as shown in Fig. 15 and Fig. 16.

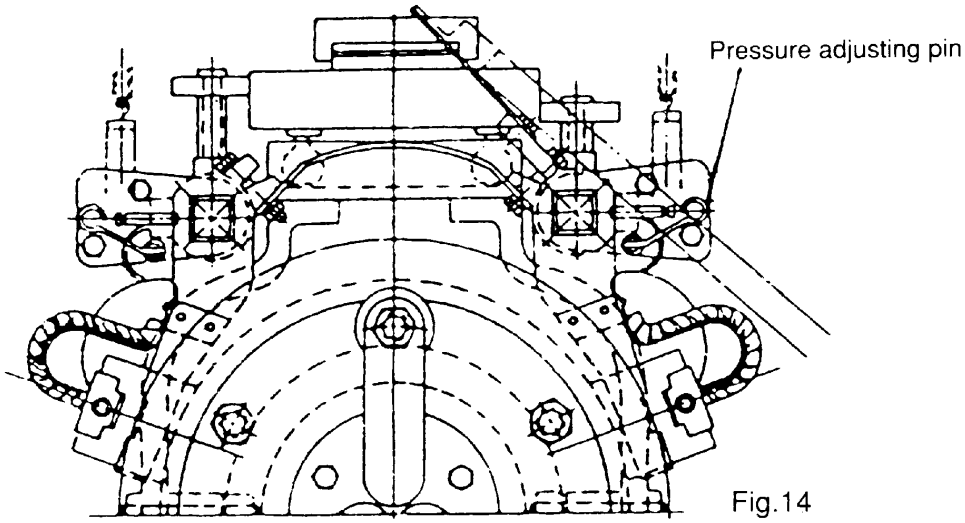

Fig.14

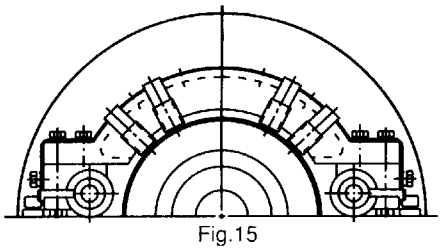

Fig.15

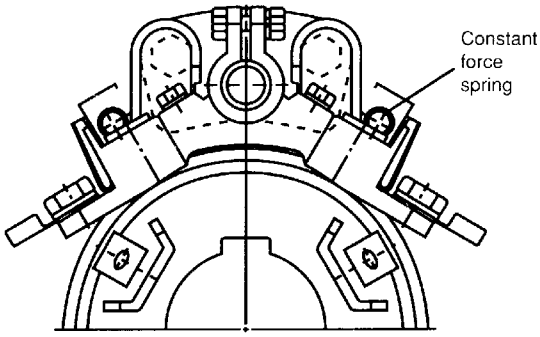

Fig.16

5.7.2 Brush replacement

The carbon brush is a part of the equipment which is easily worn away, replace it after it is worn to ½ ~ ¾ of original size.

(a) Brush material

The brush material is important to the performance of the motor. Only the most appropriate materials are chosen by TWMC, and are listed on the nameplate of the motor. It is important to know this when you replace the brush, so a recommended type is used.

(b) Dimensions

Brush, holder and gap between them, please refer to CNS 2322 C4051 or JIS C2802.

ATTENTION!
The gap between a brush and it holder is important for good performance and safety of the motor.

(c) Adjustment of new brushes (Shown in Fig. 17)

(1) Polish the new brush with a file until is assumes the appropriate contour of the slip ring which it touches.

(2) Place sand-paper (JIS R6252 No. 40…50) on the slip ring with the abrasive face of the paper against the brush to induce a closer contact by rubbing against each other.
(3) Repeat item 2 with fine sand –paper (JIS R6252 No. 100 to 200) until the contact surface between brush and slip ring exceeds 80%.
(4) Finally, clean the contaminated slip ring and brush with clean cloth or compressed air.

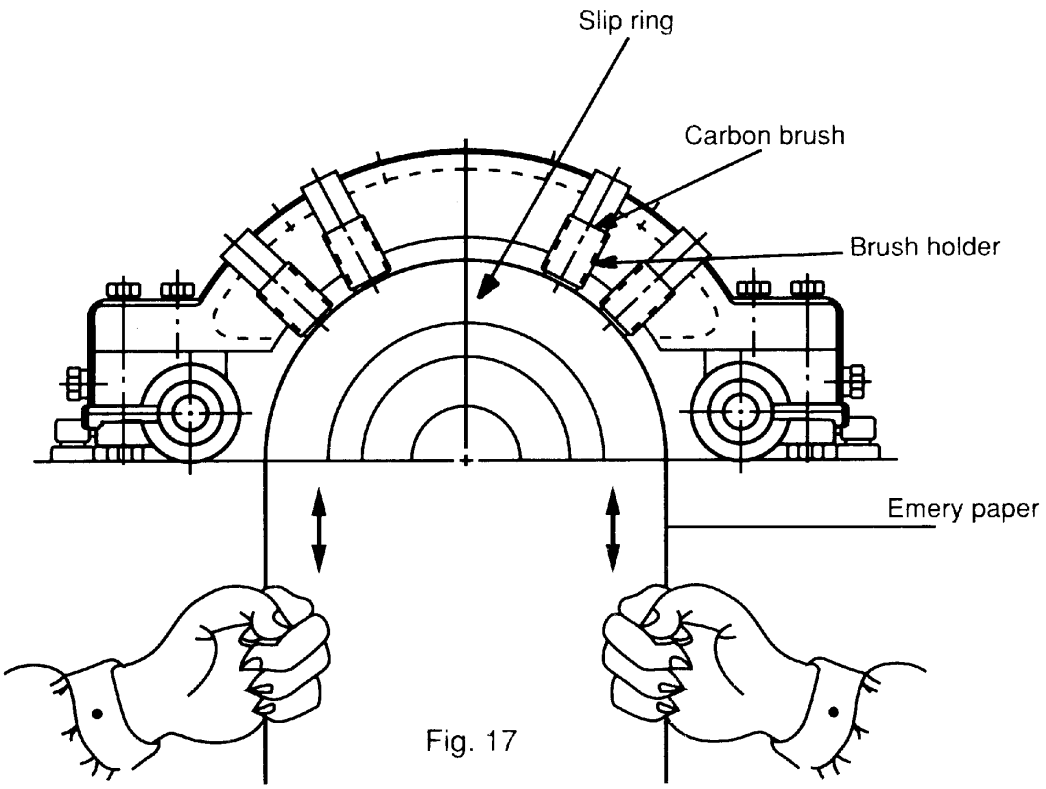

Fig. 17

5.8 Maintenance of non-reverse ratchet mechanism (For Vertical high Thrust Motor only)

5.8.1
In the pump piping system, a check valve and a stop valve should be installed in the discharge line. The check valve, placed between the pump and the stop valve, is to protect the pump from reverse flow and excessive backpressure. The stop valve is used in priming, starting and when shutting down the pump. It is advisable to close the stop valve before stopping the pump. This is especially important when the pump is operated against a high static head.

TWMC vertical high thrust motors are equipped with non-reverse ratchet (N.R.R.) mechanism only when requested by the pump manufacturer. Typical construction of the N.R.R. mechanism is shown as Fig 18 below.

The N.R.R. mechanism keeps the pump and motor from rotating in the reverse direction. Thus prevents damage from over-speeding and damage to water-lubricated pump shaft bearings

when, on shutdown, the falling water column tends to drive the pump in the reverse direction. In normal operation, the ratchet pins are lifted by the ratchet teeth and are held clear by centrifugal force and friction as the motor comes up to speed. When power is removed, the speed decreases and the pins fall. At the instant of reversal, a pin will catch in a ratchet tooth and prevent backward rotation.

5.8.2

The service life of ratchet pins depends not only on the reverse shock load between the pin and ratchet tooth when pump stopped but also the frequency of pump starting and stopping while in service. Provided that the pins are deformed due to this reverse shock load, then the up and down motion of the ratchet pins could be sluggish or jammed and that unusual noises shall arise.

The recommended replacement period for these ratchet pins is every three (3) years. If the reverse shock load is greater than 30% of motor rated torque or the starting frequency is more than twice per day, then the replacement period should be halved.

ATTENTION!
The check valve and stop valve in the discharge line should be regularly inspected and maintained to assure the normal function of these valves. This is important to protect the pump and motor from damage and increase the service life of the N.R.R. mechanism.

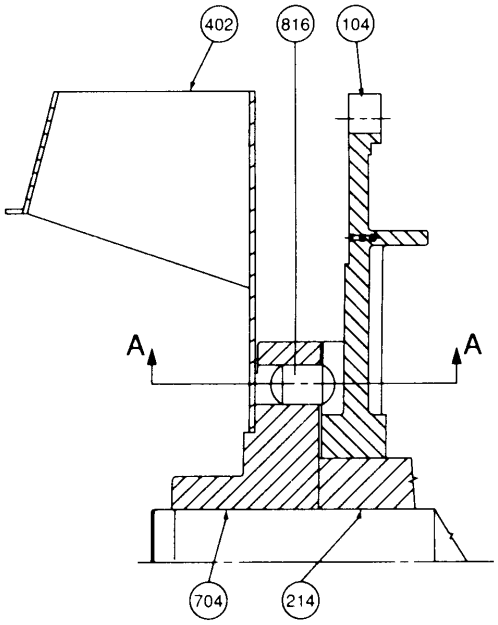

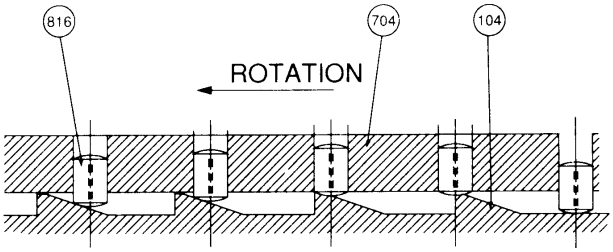

SECTION A-A

ITEM	NAME
104	RATCHET
214	BEARING SEAT
402	EXTERNAL FAN
704	RATCHET PIN CARRIER
816	RATCHET PIN

Fig. 18

6. FAULT FINDING AND RECOGNITION

Kinds of Breakdown	Symptoms	Possible Causes	Remedies
Fail to start without load	Motionless and soundless	Power-off	Consult power company
		Switch-off	Switch-on
		No fuse	Install fuse
		Broken wiring	Check wiring and repair
		Broken lead	Check wiring and repair
		Broken windings	Check windings and repair
	Fuse blowing. (Automatic switch trips off, slow start with electromagnetic noise)	Short circuit of circuit switches	Check circuit switches and replace
		Incorrect wiring	Check wiring according to nameplate
		Poor contact at terminal	Lock tightly
		Windings grounded	Factory repair
		Broken windings	Factory repair
		Poor contact of circuit switches	Check and repair
		Broken wiring	Check and repair
		Poor contact of starting switches	Check and repair
		Short circuit of starting switches	Check and repair
		Incorrect connections of starting switches	Connect according to nameplate
Loading after start	Fuse blowing. Fail to restart due to trip-off of automatic switch	Insufficient capacity of fuse	Replace fuse if wiring permits
		Overload	Lighten load
		High load at low voltage	Check circuit capacity and reduce load
	Overheating motor	Overload or intermittent overload	Lighten load
		Under-voltage	Check circuit capacity and power source
		Over-voltage	Check power source
		Ventilation duct clogged	Remove the foreign matter in the duct
		Ambient temperature exceeds 40°C	Correct insulation class to B or F, or lower ambient temperature
		Friction between rotor and stator	Factory repair
		Fuse blown (Single-phase rotating)	Install the specified fuse
		Poor contact of circuit switches	Check and repair
		Poor contact of circuit starting switches	Check and repair
		Unbalance three-phase voltage	Check circuit or consult power company

Kinds of Breakdown	Symptoms	Possible Causes	Remedies
Loading after start	Speed falls sharply	Voltage drop	Check circuit and powers source
		Sudden overload	Check machine
		Single-phase rotating	Check circuit and repair
	Switch overheat	Insufficient capacity of switch	Replace switch
		High load	Lighten load
	Bearing over-heating	High belt tension	Adjust belt tension
		Slack belt tension	Adjust belt tension
		Misalignment between motor and machine shafts	Re-align
		Over speed of bearing outer-ring	Adjust bracket
		High bearing noise	Replace the damaged bearing
Noise	Electromagnetic noise induced by electricity	Occurrence from its first operation	May be normal
		Sudden sharp noise and smoking	Short circuit of windings should be repaired at the factory
	Bearing noise	Noise of low shishi or Thru-Thru	May be normal
		Kala-Kala as a result of poor lubrication	Grease
		Kulo-Kulo as a result of poor lubrication	Clean bearing and grease
		Sa-Sa or larger noise	Replace the damaged bearing
	Mechanical noise caused by machinery	Loose belt sheave	Adjust key and lock the screw
		Loose coupling or skip	Adjust the position of couplings, lock key and screw
		Loose screw on fan cover	Lock fan cover screw tightly
		Fan rubbing	Adjust fan position
		Rubbing as a result of ingression of foreign matter	Clean motor interior and ventilation ducts
		Wind noise	Noise induced by air flowing through ventilation ducts
		Induced by conveyance machine	Repair machine
Vibration	Electromagnetic vibration	Short circuit of winding	Factory repair
		Open circuit of rotor	Factory repair
	Mechanical vibration	Unbalanced rotor	Factory repair
		Unbalanced fan	Factory repair
		Broken fan blade	Replace fan
		Unsymmetric centers between belt sheaves	Align central points
		Central points of couplings do not lie on the same level	Adjust the central points of couplings to the same level
		Improper mounting installation	Lock the mounting screws
		Motor mounting bed is not strong enough	Reinforce mounting bed

Remarks:

(1) Circuit switches: These include knife switches, electromagnetic switches, fuse and other connection switches etc.

(2) Starting switches: These include Delta-Star starters, compensate starters, reactance starters, resistor starters, starting controller's etc.

DATE Sept. 8, 2005	OUTLINE DIMENSIONS 3-PHASE INNDUCTION MOTOR	MOTOR TYPE: AEHE
CAT. #: E0038		FRAME NO. 215T

Pole	HP	kW	Hz	VOLT	Syn. Speed r/min(rpm)
8	3	2.24	60	230/460	900

Ins	Rating	Dimension in	Approx Weight	Bearings
F	CONT.	inches	190 lbs.	DE: 6308ZZ NDE: 6306ZZ

Totally Enclosed Fan Cooled Squirrel Cage Rotor.

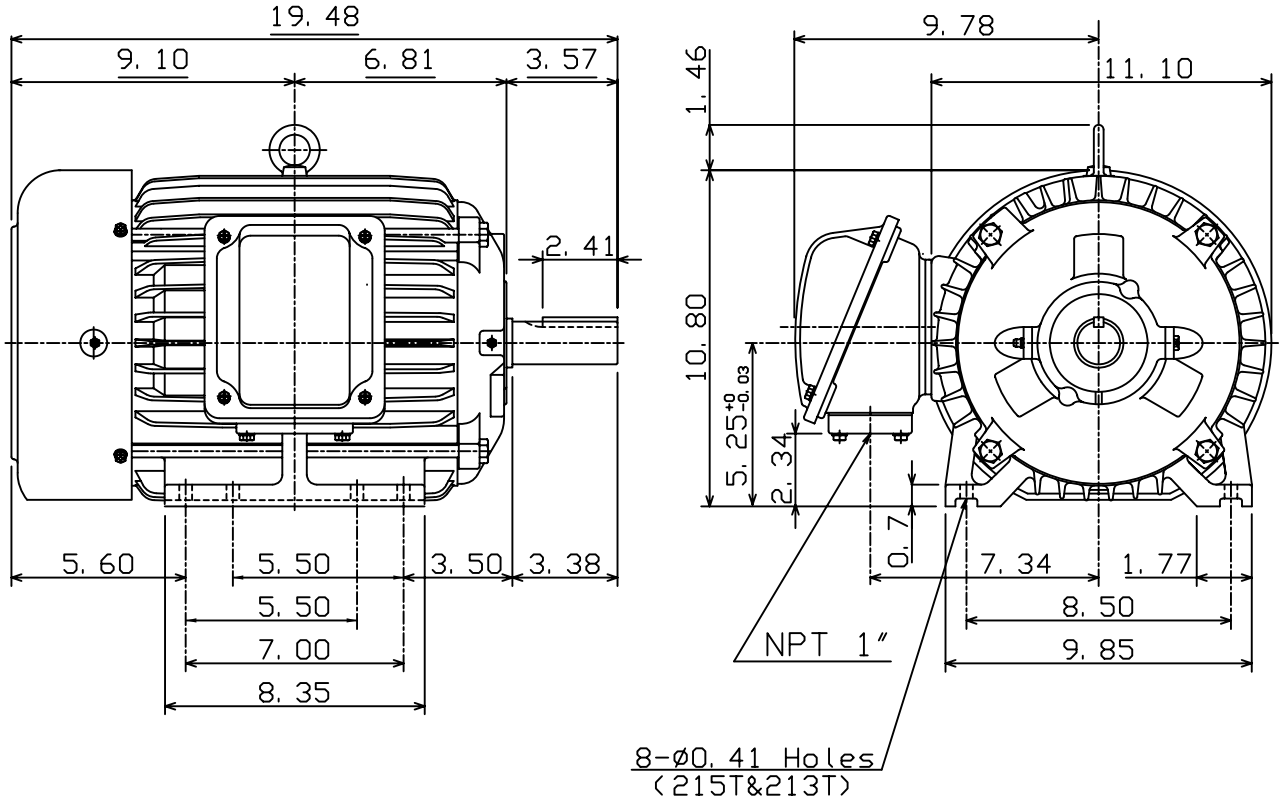

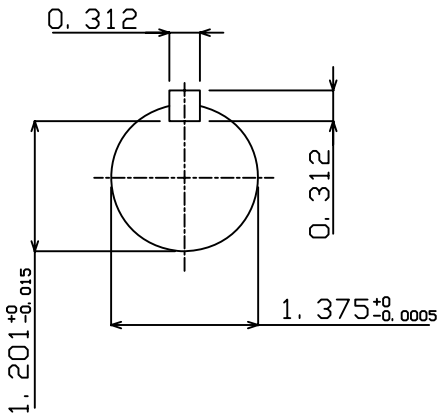

DWN.	C. S. LO	12·22·04	TECO Westinghouse	DWG NO. 31057H356100
CHKD.	C. S. LO	12·27·04		
APPD.	M. C. TSAI	12·27·04		

TECO Westinghouse

ISSUED	PERFORMANCE DATA	ENCLOSURE
March 11, 2005	3-PHASE INDUCTION MOTOR	TEFC
TYPE		CATALOG#
AEHE		E0038

NAMEPLATE INFORMATION

OUTPUT HP	OUTPUT KW	POLE	FRAME SIZE	VOLTAGE	HZ	RATED AMBIENT	INS. CLASS	NEMA DESIGN	TIME RATING	SERVICE FACTOR
3	2.2	8	215T	230/460	60	40°C	F	C	CONT.	1.15

TYPICAL PERFORMANCE

FULL LOAD RPM	EFFICIENCY FULL LOAD MIN. %	EFFICIENCY FULL LOAD NOM. %	EFFICIENCY 3/4 LOAD %	EFFICIENCY 1/2 LOAD %	POWER FACTOR F. L. %	POWER FACTOR 3/4 LOAD %	POWER FACTOR 1/2 LOAD %	MAXIMUM POWER FACTOR CORRECTION
865	82.5	85.5	84	82.5	66	57	44.5	3 KVAR

CURRENTS NO LOAD AT 208 VOLT	NO LOAD AT 230 VOLT	NO LOAD AT 460 VOLT	FULL LOAD AT 208 VOLT	FULL LOAD AT 230 VOLT	FULL LOAD AT 460 VOLT	LOCKED ROTOR AT 208 VOLT	LOCKED ROTOR AT 230 VOLT	LOCKED ROTOR AT 460 VOLT	NEMA KVA CODE LETTER
7.67	6.94	3.47	11.01	9.96	4.98	70.77	64.00	32.00	K

TORQUE FULL LOAD lb-ft	TORQUE LOCKED ROTOR %FLT	TORQUE PULL UP %FLT	TORQUE BREAK DOWN %FLT	INERTIA ROTOR WR^2 $lb\text{-}ft^2$	INERTIA NEMA LOAD WK^2 $lb\text{-}ft^2$	INERTIA MAX ALLOWABLE WK^2 $lb\text{-}ft^2$	ACCEL TIME NEMA LOAD WK^2 Sec	ACCEL TIME MAX ALLOWABLE WK^2 Sec
18.21	240	230	305	0.821	87	303	5.44	18.81

SAFE STALL TIME IN SECONDS COLD	SAFE STALL TIME IN SECONDS HOT	ALLOWABLE STARTS PER HOUR COLD	ALLOWABLE STARTS PER HOUR HOT	SOUND PRESSURE LEVEL @ 3 FT dB(A)
46	32	2	1	53

APPROVED:	M. PRATER	DRAWING NO.	31057E0038	REVISION 0

AXH air-coolers
401 East Lowery Rd. - Claremore, Ok. 74017
918-283-9200 - fax: 918-283-9229
www.axh.com

JOB NUMBER(S):	108301
CUSTOMER:	PERENNIAL ENERGY
QUANTITY:	1 MOTOR
MODEL:	48VVF
Date	2/17/2011

RUN-IN & NOISE TESTING

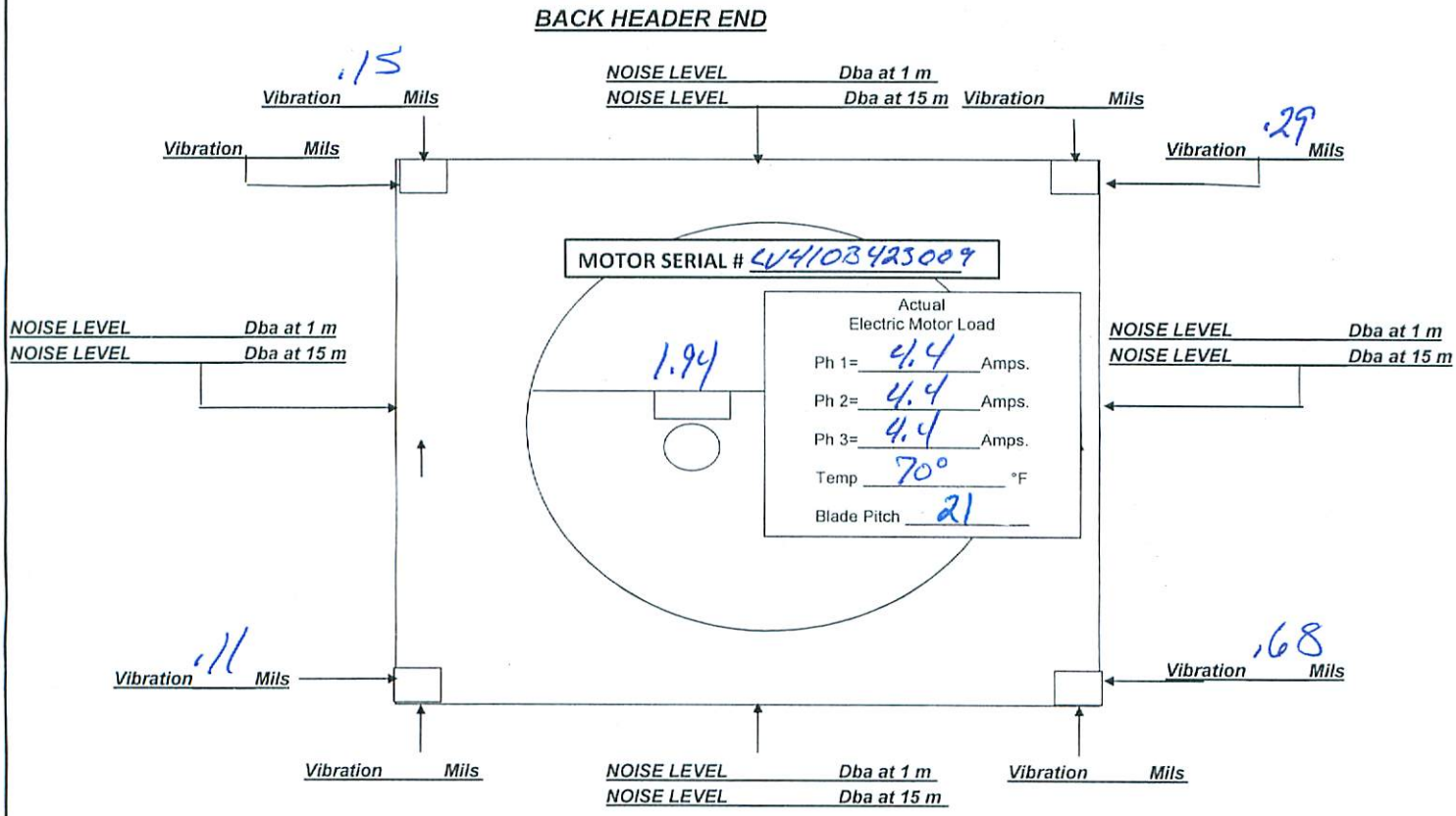

TESTING PERFORMED

1. Vibration Displacement in Mils. Peak to peak
2. Vibration Meter: Balmac Model 205
3. Noise Meter: Extech Model 407764

ANSI S1.4-1983 Type 2, IEC 651

AXH air-coolers

Tested By: Russell Bell

Date Tested: 3-18-11

Time Tested: 1:45 am / pm

03/23/2011 16:00

AXH air-coolers
MODEL 48VVF
JOB NO. 108301
TAG NO. 1641
REF NO. 231624
03/23/2011 15:59

03/23/2011 16:00

DANGER
LOCK OUT
EQUIPMENT
BEFORE ENTERING
LUBRICATION OF ELECTRIC MOTOR BEARINGS
See motor manufacturer's operation and maintenance manual for recommended grease type and frequency of lubrication.
03/23/2011 15:59

DANGER
LOCK OUT
EQUIPMENT
BEFORE ENTERING
03/30/2011 09:42

AXH air-coolers

Only the name is new... AXH air-coolers

...combines 40 years of leadership experience in the air-cooled heat exchanger industry that encompasses the entire spectrum of air-coolers from initial thermal application and mechanical engineering, though design drafting, project management and after market support. To meet the growing market demands and customer expectations Air-x-hemphill was merged into AXH air-coolers in early 2005 in conjunction with a major expansion of both physical facilities and personnel.

Capabilities

AXH air-coolers' offers an unparalleled level of experience and technical expertise throughout the entire organization, coupled with the largest manufacturing facility in the industry. A complete range of air-cooler models, types and sizes can be provided to fit any standard or custom application. Importantly we have the capability to design, supply and duplicate virtually any replacement cooler or section as well as support the reapplication of existing coolers.

Reliability

We have manufactured thousands of air-coolers for the natural gas compression and process industries and have an established reputation for meeting delivery requirements. Foremost we are committed to quality assurance and on time shipment.

Integrity

AXH air-coolers' objective and commitment is to consistently provide customers with the highest quality air-coolers and support at a competitive price.

Corporate and sales office

Facilities

A new 161,000 square feet plant is located on 12 acres outside Tulsa and adjacent to Route 66 in Claremore, Oklahoma.

Capabilities

Finning area in 750 foot long East bay

5,000 sq. ft. parts warehouse

400 ton, 3/4" X 22' press brake

Larger of two paint booths - 1,900 sq. ft.

East bay final assembly area

(46) ASME code welding stations providing Stick, MIG, TIG & sub-arc procedures

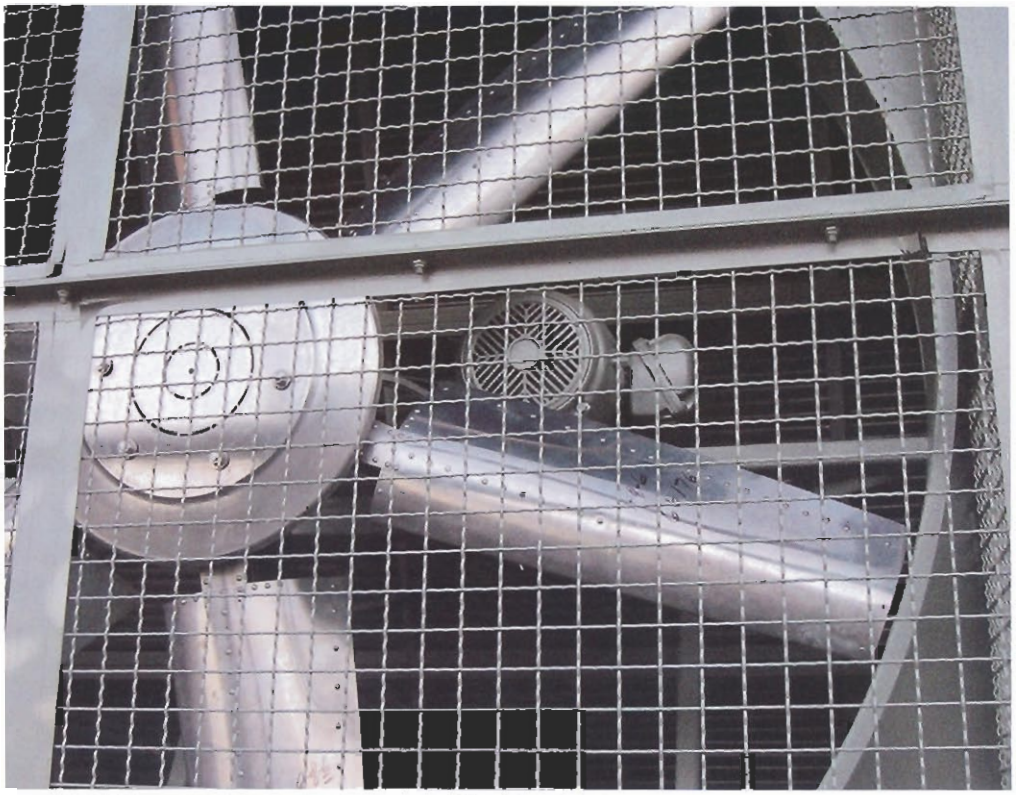

Model 120EF with internal electric motor drive

Type HF incorporating evaporative inlet cooling

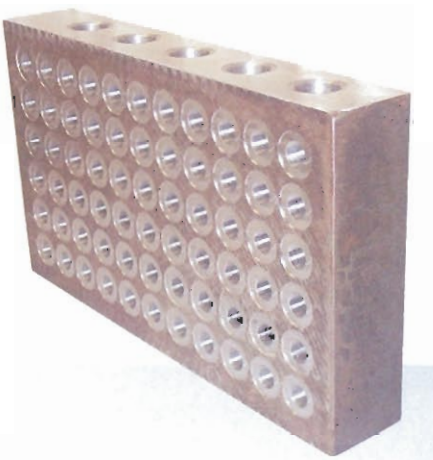

EF Models departing with warm air recirculation

Reliability

EF coolers ready for shipment

Type EF fan guard and "soft" bug screen frame

Induced Draft - Type VI's

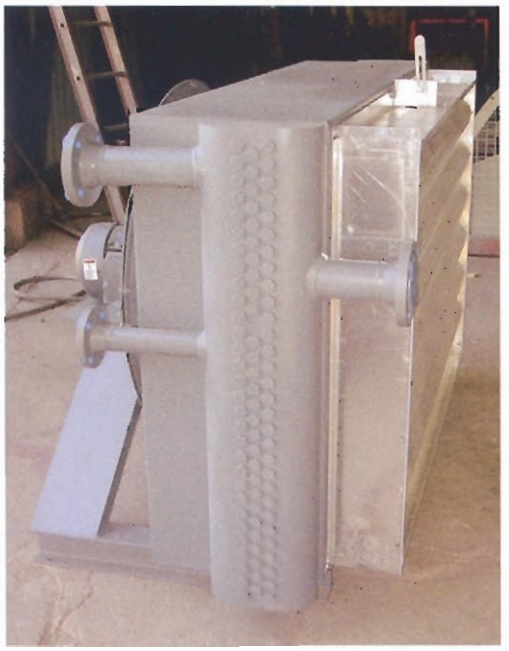

Model VV with Obround headers

Model 180-2ZF destined for overseas

Direct Drive Model 36VVF's

Model 60HF

Packaged two-fan, Model 120FF2

Galvanized Model 108FF2

Integrity

Air Cooled Heat Exchangers

Fully equipped for field service

AXH air-coolers

401 East Lowry, Claremore, Oklahoma 74017

(918) 283-9200 Fax (918) 283-9229

www.axh.com

Raychem®

Industrial Heat-Tracing Installation and Maintenance Manual

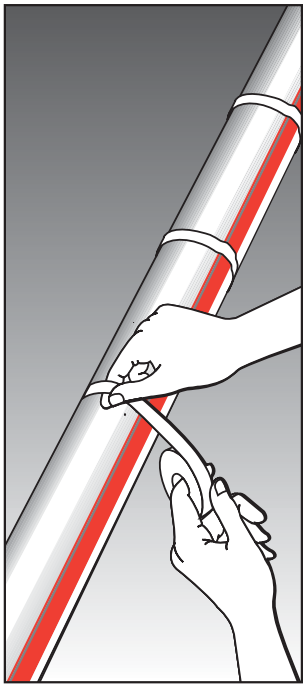

Self-Regulating and Power-Limiting Heating Cable Systems

Tyco Thermal Controls

⚠ **WARNING: Fire and shock hazard.**

Raychem® heat-tracing systems must be installed correctly to ensure proper operation and to prevent shock and fire. Read these important warnings and carefully follow all the installation instructions.

- **To minimize the danger of fire from sustained electrical arcing if the heating cable is damaged or improperly installed, and to comply with Tyco Thermal Controls requirements, agency certifications, and the national electrical codes, ground-fault equipment protection must be used on each heating-cable branch circuit. Arcing may not be stopped by conventional circuit breakers.**
- **Approvals and performance of the heat-tracing systems are based on the use of Tyco Thermal Controls specified parts only. Do not substitute parts or use vinyl electrical tape.**
- **Bus wires will short if they contact each other. Keep bus wires separated.**
- **Components and cable ends must be kept dry before and during installation.**
- **The black heating-cable core and fibers are conductive and can short. They must be properly insulated and kept dry.**
- **Damaged bus wires can overheat or short. Do not break bus wire strands when preparing the cable for connection.**
- **Damaged heating cable can cause electrical arcing or fire. Do not use metal attachments such as pipe straps or tie wire. Use only Raychem approved tapes and cable ties to secure the cable to the pipe.**
- **Do not attempt to repair or energize damaged cable. Remove damaged cable at once and replace with a new length using the appropriate Raychem splice kit. Replace damaged components.**
- **Re-use of the grommets, or use of the wrong grommet, can cause leaks, cracked components, shock, or fire. Be sure the type of grommet is correct for the heating cable being installed. Use a new grommet whenever the cable has been pulled out of the component.**
- **Use only fire-resistant insulation which is compatible with the application and the maximum exposure temperature of the system to be traced.**
- **To prevent fire or explosion in hazardous locations, verify that the maximum sheath temperature of the heating cable is below the auto-ignition temperature of the gases in the area. For further information, see the design documentation.**
- **Material Safety Data Sheets (MSDSs) are available from the Tyco Thermal Controls Customer Service Center.**

Table of Contents

1	General Information	1
2	Heating Cable Selection	3
3	Heating Cable Installation	4
4	Heating Cable Components	16
5	Control and Monitoring	18
6	Thermal Insulation	19
7	Power Supply and Electrical Protection	20
8	Commissioning and Preventive Maintenance	21
9	Test Procedures	23
10	Troubleshooting Guide	32
11	Installation and Inspection Records	36

1 General Information

1.1 Use of the Manual

This installation and maintenance manual is for Raychem Self-Regulating and Power-Limiting heat-tracing systems on thermally insulated pipes and vessels only. This includes Raychem BTV, QTVR, XTV, and VPL heating cables and the appropriate Raychem components.

For information regarding other applications, design assistance or technical support, contact your Tyco Thermal Controls representative or Tyco Thermal Controls directly.

Tyco Thermal Controls
300 Constitution Drive
Menlo Park, CA 94025-1164
USA
Tel (800) 545-6258
Fax (800) 527-5703
Technical Support (650) 474-7709
info@tycothermal.com
www.tycothermal.com

Important: For the Tyco Thermal Controls warranty and agency approvals to apply, the instructions that are included in this manual and product packages must be followed.

1.2 Safety Guidelines

The safety and reliability of any heat-tracing system depends on proper design, installation and maintenance. Incorrect handling, installation, or maintenance of any of the system components can cause underheating or overheating of the pipe or damage to the heating-cable system and may result in system failure, electric shock or fire.

1.3 Electrical Codes

Sections 427 (pipelines and vessels) and 500 (classified locations) of the National Electrical Code (NEC), and Part 1 of the Canadian Electrical Code, Sections 18 (hazardous locations) and 62 (Fixed Electric Space and Surface Heating), govern the installation of electrical heat-tracing systems. All heat-tracing-system installations must be in compliance with these and any other applicable national or local codes.

1 General Information

1.4 Warranty and Approvals

Raychem heating cables and components are approved for use in hazardous and non-hazardous locations. Refer to the specific product data sheets for details.

1.5 General Installation Notes

These notes are provided to assist the installer throughout the installation process and should be reviewed before the installation begins.

- Read all instruction sheets to familiarize yourself with the products.
- Select the heating-cable type and rating in accordance with the Industrial Product Selection and Design Guide (Tyco Thermal Controls literature #H56550), or TraceCalc® Pro software, or the website design software.
- Ensure all pipes, tanks, etc., have been released by the client for tracing prior to installation of the heating cables.
- Typically, heating cables are installed at the 4 and 8 o'clock positions on a pipe.
- All heat-traced pipes, tanks, vessels and equipment must be thermally insulated.
- Do not install heating cables on equipment operating above the heating cable's maximum rated temperature.
- The minimum bending radius for VPL Power-Limiting cables is 3/4 inch (19 mm). The minimum bending radius for Self-Regulating cables is 1/2 inch (13 mm).
- Never install heating cables over expansion joints without leaving slack in the cable.
- Do not energize cable when it is coiled or on the reel.
- Never use tie wire or pipe straps to secure heating cables.
- The minimum installation temperature for heating cables is –40°F (–40°C).

2 Heating Cable Selection

Check the design specification to make sure the proper heating cable is installed on each pipe or vessel. Refer to the Industrial Product Selection and Design Guide, TraceCalc Pro or the Tyco Thermal Controls web site, www.tycothermal.com, to select the proper heating cable for your application.

3 Heating Cable Installation

3.1 Heating Cable Storage

- Store the heating cable in a clean, dry place. Temperature range: –40°F (–40°C) to 140°F (60°C).
- Protect the heating cable from mechanical damage.

3.2 Pre-Installation Checks

Check materials received:

- Review the heating cable design and compare the list of materials to the catalog numbers of heating cables and components received to confirm that proper materials are on site. The heating cable type and voltage is printed on its jacket.
- Ensure that the heating cable voltage rating is suitable for the service voltage available.
- Inspect the heating cable and components for in-transit damage.
- Verify that there are no holes in the heating cable jackets by conducting the insulation resistance test (refer to Section 9) on each reel of cable.

Check piping to be traced:

- Make sure all mechanical pipe testing (i.e. hydrostatic testing/purging) is complete and the system has been cleared by the client for tracing.
- Walk the system and plan the routing of the heating cable on the pipe.
- Inspect the piping for burrs, rough surfaces or sharp edges. Remove if necessary.
- Verify that any surface coatings are dry to the touch.

3.3 Installation

Paying out the cable

Pay out the heating cable, loosely stringing it along the pipe, making sure that the cable is always next to the pipe when crossing obstacles. If the cable is on the wrong side of an obstacle such as a crossing pipe or I-beam, you will need to reinstall it or cut and splice it.

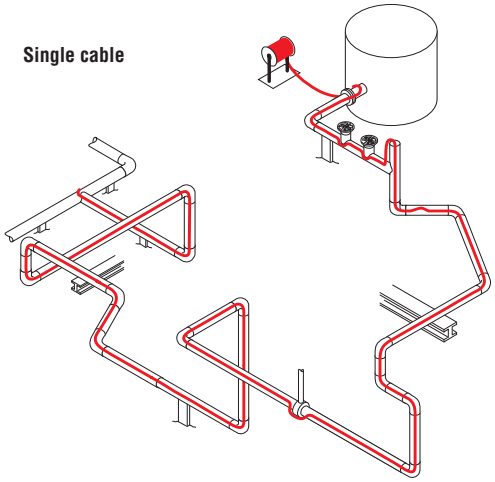

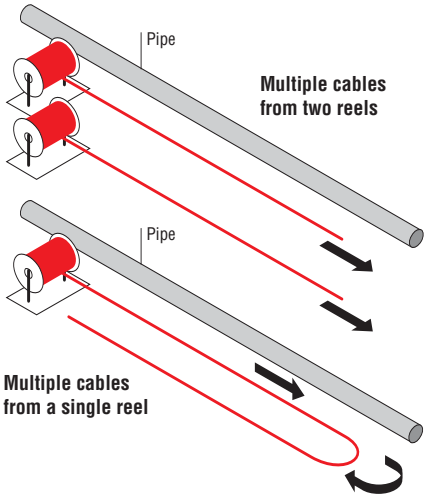

3 Heating Cable Installation

Heating cable paying out tips:

- Use a reel holder that pays out smoothly with little tension. If heating cable snags, stop pulling.
- Keep the heating cable strung loosely but close to the pipe being traced to avoid interference with supports and equipment.
- Meter marks on the heating cable can be used to determine heater length.
- Protect all heating cable ends from moisture, contamination and mechanical damage.

When paying out the heating cable, AVOID:

- Sharp edges
- Excessive pulling force or jerking
- Kinking and crushing
- Walking on it, or running over it with equipment

⚠ WARNING: Fire and shock hazard. Do not install damaged cable. Components and cable ends must be kept dry before and during installation.

Positioning heating cables

If possible, position the heating cable on the lower section of the pipe, at the 4 and 8 o'clock positions, as shown below, to protect it from damage.

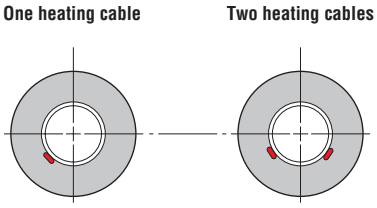

3 Heating Cable Installation

Attachment tapes

Use one of the following Raychem attachment tapes to secure the heating cable on the the pipe: GT-66 or GS-54 fiberglass tape, or AT-180 aluminum tape.

GT-66 fiberglass tape

- General purpose tape for installation at 40°F (5°C) and above.
- Use in applications below 266°F (130°C).

GS-54 fiberglass tape

- Special application tape for stainless steel pipes.
- For installations at –40°F (–40°C) and above.
- Use in applications below 356°F (180°C).

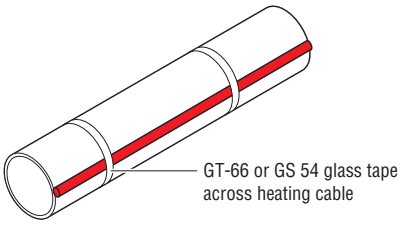

AT-180 aluminum tape

- Heat-transfer tape for plastic pipes, pump bodies, and odd-shaped equipment.
- Install above 32°F (0°C).
- Use in applications below 300°F (150°C).
- Tape lengthwise over the heating cable as required by the design.

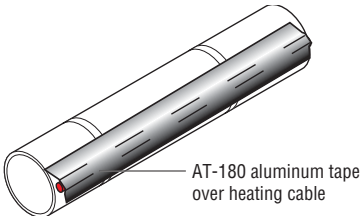

⚠ WARNING: Do not use metal attachments such as pipe straps or tie wire. Do not use vinyl-based electrical or duct tape. Use only Raychem approved tapes.

Attaching the heating cable

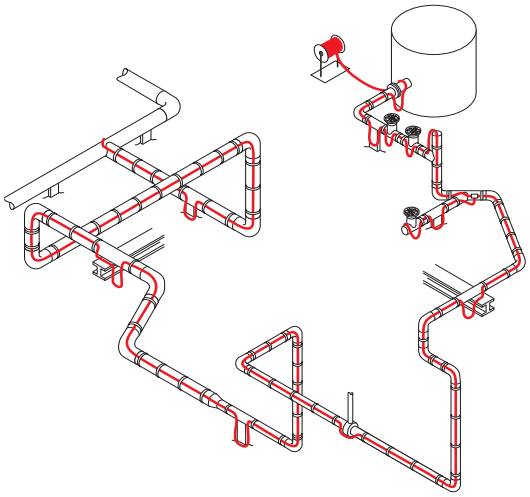

Starting from the end opposite the reel, tape the heating cable on the pipe at every foot, as shown in the figure above. If aluminum tape is used, apply it over the entire length of the heating cable after the cable has been secured with glass tape. Work back to the reel. Leave extra heating cable at the power connection, at all sides of splices and tees and at the end seal to allow for future servicing.

Allow a loop of extra cable for each heat sink, such as pipe supports, valves, flanges, and instruments, as detailed by the design. Refer to “Typical Installation Examples” for attaching heating cable to heat sinks.

- Install heating cable components immediately after attaching the heating cable. If immediate installation is not possible, protect the heating cable ends from moisture.

Multiple cables and spiraling

There are two situations where multiple heating cable runs may be required:

- **Redundant heat-tracing runs** are used in situations where a backup is required. Each run should be installed per the design specifications.
- **Double or multiple heat-tracing runs** are used when a single heat-tracing run alone cannot compensate for larger heat losses. Double heat-tracing runs should have extra heating cable installed at heat sinks, as called out in the design. It is recommended to supply the extra heating cable at heat sinks alternately from both runs in order to balance out both circuit lengths.

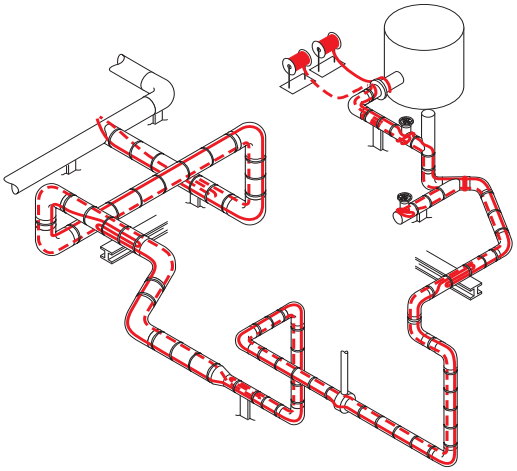

3 Heating Cable Installation

Spiral tracing

When the design calls for spiralling, begin by suspending a loop at every 10-foot pipe section. To determine the loop length, obtain a spiral factor from the design and multiply by 10. For example if the spiral factor of 1.3 is called for, leave a 13-foot loop of heating cable at every 10-foot section of pipe. Attach the loop to the pipe at each interval using the appropriate Raychem attachment tape.

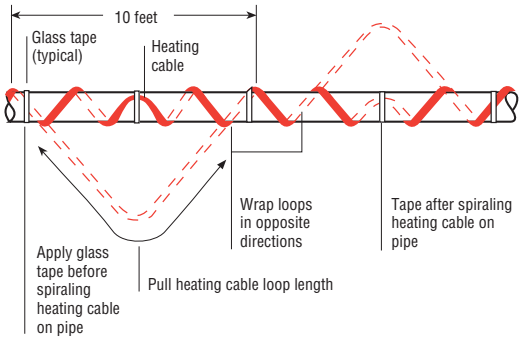

Bending the cable

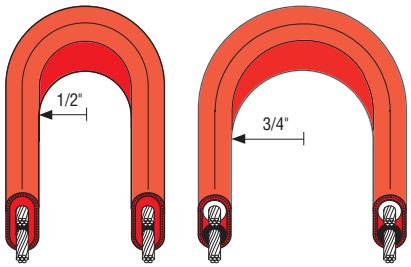

Self-Regulating minimum bend radius **Power-Limiting minimum bend radius**

When positioning the heating cable on the pipe, do not bend tighter than 1/2" for Self-Regulating cables and 3/4" for Power-Limiting cables.

3 Heating Cable Installation

The heating cable does not bend easily in the flat plane. Do not force such a bend, as the heating cable may be damaged.

Crossing the cable

Self-Regulating cables, BTV, QTVR, XTV, allow for multiple overlapping of the heating cable.

Power-Limiting cable, VPL, allows for a single overlap of the heating cable per zone.

For VPL heating cable only:

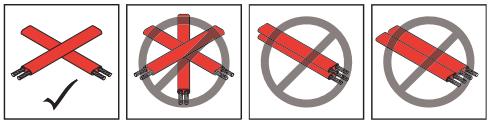

Cutting the cable

Cut the heating cable to length after it is attached to the pipe.

Heating cable can be cut to length without affecting the heat output per foot.

Typical installation examples

Wrap pipe fittings, equipment, and supports as shown in the following examples to properly compensate for higher heat-loss at heat sinks and to allow easy access for maintenance. The exact amount of heating cable needed is determined in the design.

Valve

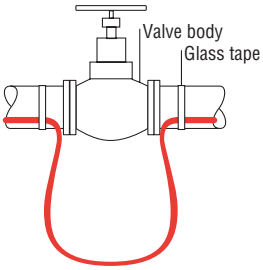

Note: Cable loop length varies depending on heat loss.

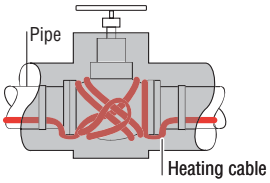

Multiple cross-overs allowed for Self-Regulating cables

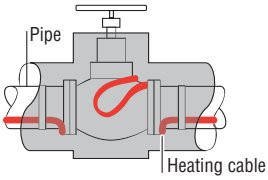

Single cross-over only, allowed for Power-Limiting cables

Flange

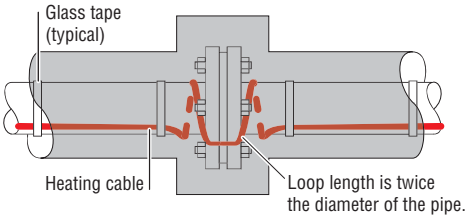

3 Heating Cable Installation

Pipe support shoe

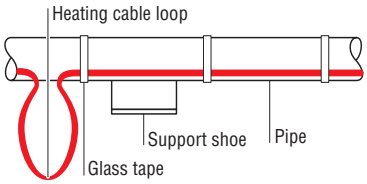

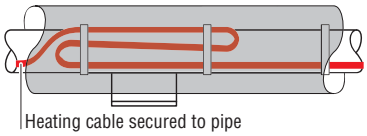

Elbow

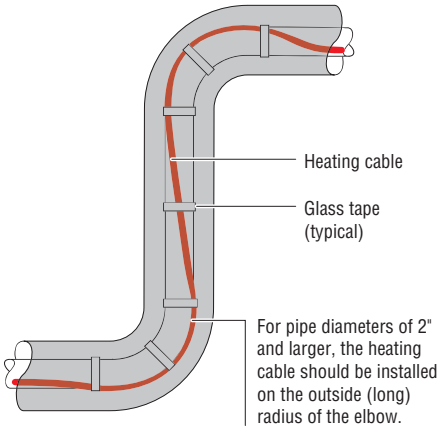

3 Heating Cable Installation

Pressure gauge

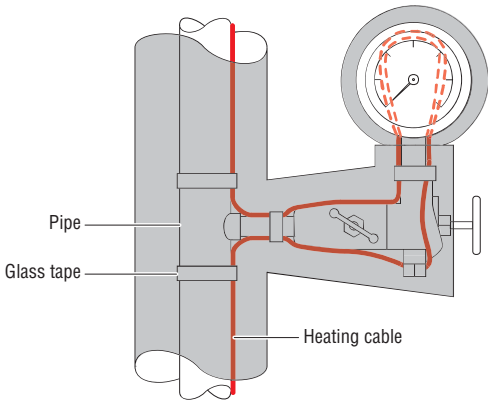

Split case centrifugal pump

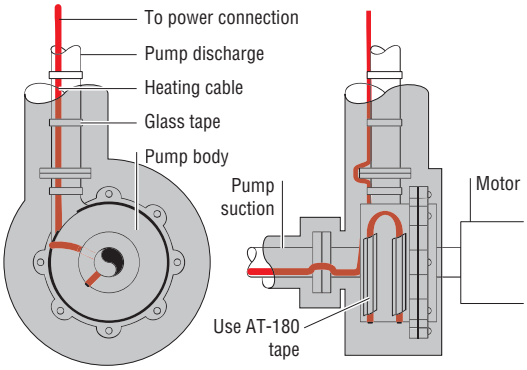

3 Heating Cable Installation

Pipe hanger

No additional heating cable is required for pipe hangers unless called for in the design specification, then use loop length specified.

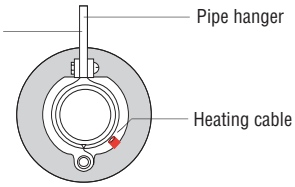

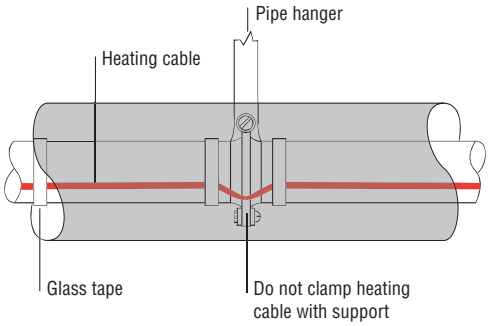

4 Heating Cable Components

4.1 General Component Information

Raychem components must be used with Raychem Self-Regulating and Power-Limiting heating cables. A complete circuit requires a power connection and an end seal. Splices and tees are used as needed.

Use the Industrial Product Selection and Design Guide or TraceCalc Pro to select appropriate components.

Installation instructions are included with the component kit. Steps for preparing the heating cable and connecting to components must be followed.

Raychem Self-Regulating and Power-Limiting heating cables are parallel circuit design. Do not twist the conductors together as this will result in a short circuit.

Component Installation Tips

- Connection kits should be mounted on top of the pipe when practical. Electrical conduit leading to power connection kits should have low-point drains to keep condensation from accumulating in the conduit. All heating cable connections must be mounted above grade level.
- Special adapters are available for mounting on small pipes. Be sure to use these adapters if installing cables on pipes of 1 inch O.D. or less.
- Be sure to leave a service loop at all components for future maintenance, except when temperature-sensitive fluids are involved or when the pipe is smaller than 1 inch.
- Locate junction boxes for easy access but not where they may be exposed to mechanical abuse.
- Heating cables must be installed over, not under, pipe straps used to secure components.
- For VPL, cut cable 12" (30 cm) from last active node (indentation) to be sure an inactive zone is used to enter the component. Refer to component installation instructions.
- All power connections, splices, tees, and end seals in a Division 1 location must use the HAK-C-100 connection kit and an HAK-JB3-100 or a Division 1 Nationally Recognized Testing Lab (NRTL) approved junction box.

⚠ WARNING: The black heating-cable core and fibers are electrically conductive and can short. They must be properly insulated and kept dry.

Damaged bus wires can overheat or short. Do not break bus wire strands when stripping the heating cable

Raychem components for Nonhazardous and CID2, CIZ1, & CIZ2 Hazardous Locations.

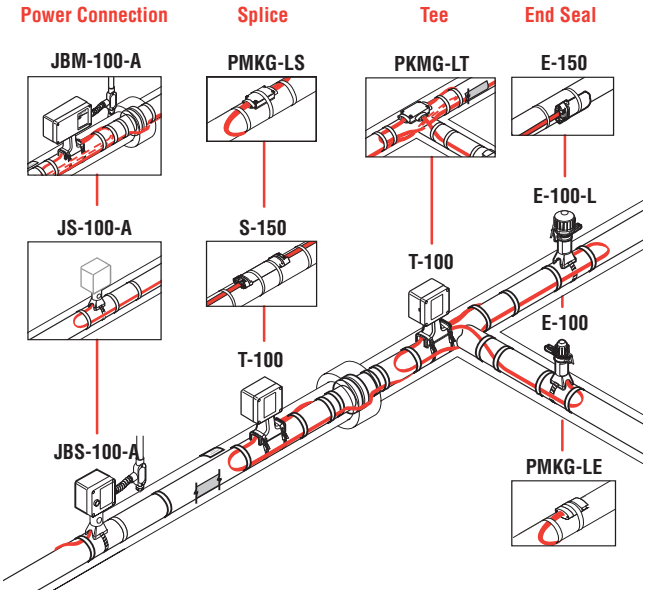

Raychem Components for CID1 Hazardous Locations.

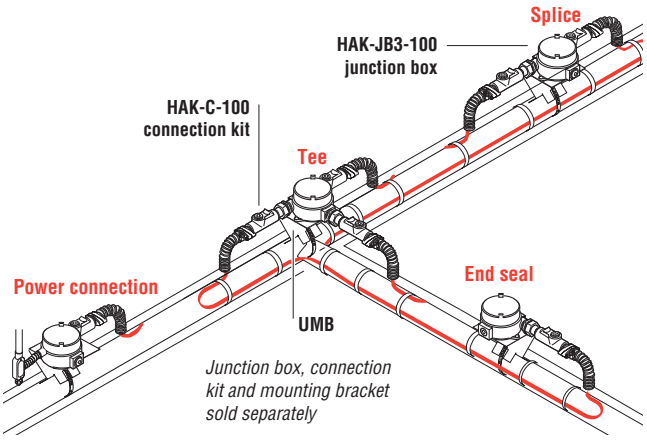

⚠ WARNING: Fire and shock hazard. Raychem brand specified components must be used. Do not substitute parts or use vinyl electrical tape.

5 Control and Monitoring

Tyco Thermal Controls DigiTrace® control and monitoring products are designed for use with Self-Regulating and Power-Limiting heat-tracing systems. Thermostats, controllers and control and monitoring systems are available. Compare features of these products in the table below. For additional information on each product, refer to the Industrial Product Selection and Design Guide or contact your Tyco Thermal Controls representative.

Refer to the installation instructions supplied with control and monitoring products. Control and Monitoring systems may require installation by a certified electrician.

Tyco Thermal Controls Control and Monitoring Products

	Thermostats		Controllers			
			DigiTrace Series*			
	AMC-F5 AMC-1A AMC-1H	AMC-F5 AMC-1B AMC-2B-2 E507S-LS E507S-2LS-2 Raystat-EX03-A	910	920	200N	T2000
Control						
Ambient-sensing	■		●	●	●	●
Line-sensing		■	●	●	●	●
PASC			●	●	●	●
Monitoring						
Ambient temperature			●	●	●	●
Pipe temperature			●	●	●	●
Ground fault			●	●	●	●
Continuity					●	
Current			●	●	●	●
Location						
Local	■	■	●	●		●
Remote			●	●	●	●
Hazardous	AMC-1H	E507S	●	●		●
Communication						
Local display			●	●	●	●
Remote display			●	●	●	●
Network to DCS			●	●	●	●

*DigiTrace controllers used in CID1 areas require the use of appropriate hazardous area enclosures or Z-purge systems.

6 Thermal Insulation

6.1 Pre-Insulation Checks

Visually inspect the heating cable and components for correct installation and damage. Damaged cable must be replaced.

Perform insulation resistance testing known as a Megger™ test, (refer to Section 9) prior to covering the pipe with thermal insulation.

6.2 Insulation Installation Hints

- Insulation must be properly installed and kept dry.
- Check insulation type and thickness against the design specification.
- To minimize potential heating cable damage, insulate as soon as possible after tracing.
- Check that pipe fittings, wall penetrations and other irregular areas, have been completely insulated.
- When installing cladding, be sure drills, screws and sharp edges do not damage the heating cable.
- To weatherproof the insulation, seal around all fixtures that extend through the cladding. Check around valve stems, support brackets, and thermostat capillaries.

6.3 Marking

Apply "Electric Traced" labels on outside of the cladding at 10-foot intervals on alternate sides to indicate presence of electric cables.

Other labels, which identify the location of splices, tees and end connections installed beneath the thermal insulation, are supplied with those components and must also be used.

6.4 Post-Insulation Testing

After the insulation is complete, perform an insulation resistance test on each circuit to confirm that the cable has not been damaged (refer to Section 9).

⚠ WARNING: Use only fire-resistant insulation, such as fiberglass, mineral wool or calcium silicate.

7 Power Supply and Electrical Protection

7.1 Voltage Rating

Verify that the source voltage corresponds to the heating-cable rating printed on the cable jacket and specified by the design.

7.2 Electrical Loading

Overcurrent devices are selected according to the heating-cable type, source voltage, and circuit length to allow start-up at the designed ambient temperatures. The design specifies the size and type of overcurrent device.

7.3 Ground-Fault Protection

If the heating cable is improperly installed, or physically damaged to the point that water contacts the bus wires, sustained arcing or fire could result. If arcing does occur, the fault current may be too low to trip conventional circuit breakers.

Tyco Thermal Controls, the U.S. National Electrical Code, and the Canadian Electrical Code require both ground-fault protection of equipment and a grounded metallic covering on all heating cables. All Raychem products meet the metallic covering requirement. Following are some of the ground fault breakers that satisfy this equipment protection requirement: Square D Type GFPD EHB-EPD (277 Vac); Cutler Hammer (Westinghouse) Type QBGFEP.

⚠ WARNING: To minimize the danger of fire from sustained electrical arcing if the heating cable is damaged or improperly installed, and to comply with Tyco Thermal Controls requirements, agency certifications, and national electrical codes, ground-fault equipment protection must be used on each heating-cable branch circuit. Arcing may not be stopped by conventional circuit breakers.

⚠ WARNING: Disconnect all power before making connections to the heating cable.

8 Commissioning and Preventative Maintenance

Tyco Thermal Controls requires a series of tests be performed on the heat-tracing system upon commissioning. These tests are also recommended at regular intervals for preventive maintenance. Results must be recorded and maintained for the life of the system, utilizing the "Installation and Inspection Record" (refer to Section 11).

8.1 Tests

A brief description of each test is found below. Detailed test procedures are found in Section 9.

Visual inspection

Visually inspect the pipe, insulation, and connections to the heating cable for physical damage. Check that no moisture is present, electrical connections are tight and grounded, insulation is dry and sealed, and control and monitoring systems are operational and properly set. Damaged heating cable must be replaced.

Insulation Resistance

Insulation Resistance (IR) testing is used to verify the integrity of the heating-cable inner and outer jackets. IR testing is analogous to pressure testing a pipe and detects if a hole exists in the jacket. IR testing can also be used to isolate the damage to a single run of heating cable. Fault location can be used to further locate damage.

Power check

The heating-cable power per foot (meter) is calculated by dividing the total wattage by the total length of a circuit. The current, voltage, operation temperature and length must be known. Circuit length can be determined from "as built" drawings, meter marks on cable or the capacitance test.

$$\text{Power (w/ft or m)} = \frac{\text{Volts (Vac) x Current (Amps)}}{\text{Length (ft or m)}}$$

The watts per foot (meter) can be compared to the heaing-cable output indicated on the product data sheet at the temperature of operation. This gives a good indication of heating-cable performance.

Ground-fault test

Test all ground-fault breakers per manufacturer's instructions.

8 Commissioning and Preventative Maintenance

8.2 Preventative Maintenance

Recommended maintenance for Tyco Thermal Controls heat-tracing systems consists of performing the commissioning tests on a regular basis. Procedures for these tests are described in Section 9. Systems should be checked before each winter.

If the heat-tracing system fails any of the tests, refer to Section 10 for trouble shooting assistance. Make the necessary repairs and replace any damaged cable immediately.

De-energize all circuits that may be affected by maintenance.

Protect the heating cable from mechanical or thermal damage during maintenance work.

The recommended cable installation methods allow for extra cable at all pipe fixtures (such as valves, pumps, and pressure gauges) that are likely to incur maintenance work.

Maintenance records

The "Installation and Inspection Record," (refer to Section 11), should be filled out during all maintenance and repair work, and kept for future reference.

Repairs

Use only Raychem cable, and components when replacing any damaged heating cable. Replace the thermal insulation to original condition or replace with new insulation, if damaged.

Retest the system after repairs.

⚠ WARNING: Damage to cables or components can cause sustained electrical arcing or fire. Do not attempt to repair damaged heating cable. Do not energize cables that have been damaged by fire. Replace damaged cable at once by removing the entire damaged section and splicing in a new length using the appropriate Raychem splice kits. Do not reuse grommets. Use new grommets whenever the heating cable has been pulled out of the components.

9 Test Procedures

9.1 Visual Inspection

- Check inside heating cable components for proper installation, overheating, corrosion, moisture, and loose connections.
- Check the electrical connections to ensure that ground and bus wires are insulated over their full length.
- Check for damaged or wet thermal insulation; damaged, missing or cracked lagging and weather-proofing.
- Check that end seals, splices, and tees are properly labeled on insulation cladding.
- Check Control and Monitoring system for moisture, corrosion, set point, switch operation and capillary damage.

9.2 Insulation Resistance (Megger™) Test

Frequency

Insulation resistance testing is recommended at five stages during the installation process and as part of regularly scheduled maintenance.

- Before installing the cable
- Before installing components
- Before installing the thermal insulation
- After installing the thermal insulation
- Prior to initial start-up (commissioning)
- As part of the regular system inspection
- After any maintenance or repair work

Procedure

Insulation resistance testing (using a megohmmeter) should be conducted at three voltages; 500, 1000, and 2500 Vdc. Significant problems may not be detected if testing is done only at 500 and 1000 volts.

First measure the resistance between the heating cable bus wires and the braid (Test A) then measure the insulation resistance between the braid and the metal pipe (Test B). Do not allow test leads to touch junction box, which can cause inaccurate readings.

1. De-e nergize the circuit.
2. Disconnect the thermostat or controller if installed.
3. Disconnect bus wires from terminal block, if installed.
4. Set test voltage at 0 Vdc.
5. Connect the negative (–) lead to the heating-cable metallic braid.
6. Connect the positive (+) lead to both heating-cable bus wires simultaneously.
7. Turn on the megohmmeter and set the voltage to 500 Vdc; apply the voltage for 1 minute. Meter needle should stop moving. Rapid deflection indicates a short. Record the insulation resistance value in the Inspection Record.
8. Repeat Steps 4-7 at 1000 and 2500 Vdc.
9. Turn off the megohmmeter.
10. If the megohmmeter does not self-discharge, discharge phase connection to ground with a suitable grounding rod. Disconnect the megohmmeter.
11. Repeat this test between braid and pipe.
12. Reconnect bus wires to terminal block.
13. Reconnect the thermostat.

Note: *System checkout and regular maintenance procedures require that Megger™ testing be performed from the distribution panel unless a control and monitoring system is in use. If no control system is being used, remove both power feed wires from the breaker and proceed as if testing heating-cable bus wires. If a control and monitoring system is being used, remove the control equipment from the circuit and conduct the test directly from the heating cable.*

⚠ WARNING: Fire hazard in hazardous locations. Megger™ test can produce sparks. Be sure there are no flammable vapors in the area before performing this test.

Insulation resistance criteria

A clean, dry, properly installed circuit should measure thousands of megohms, regardless of the heating-cable length or measuring voltage (0–2500 Vdc). The following criteria are provided to assist in determining the acceptability of an installation where optimum conditions may not apply.

- All insulation resistance values should be greater than 1000 megohms. If the reading is lower, consult Section 10, Troubleshooting Guide.

Note: *Insulation resistance values for Test A and B; for any particular circuit, should not vary more than 25 percent as a function of measuring voltage. Greater variances may indicate a problem with your heat-tracing system, confirm proper installation and/or contact Tyco Thermal Controls for assistance.*

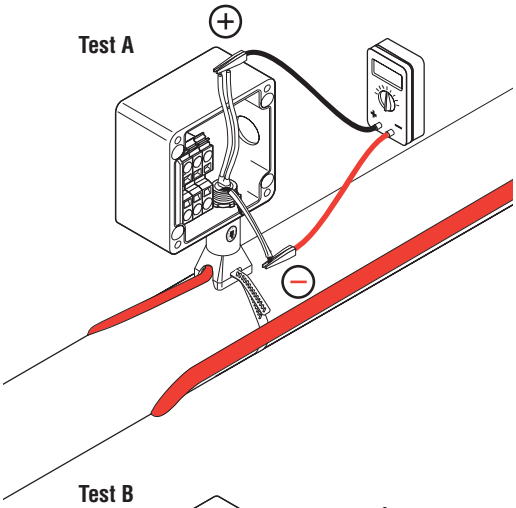

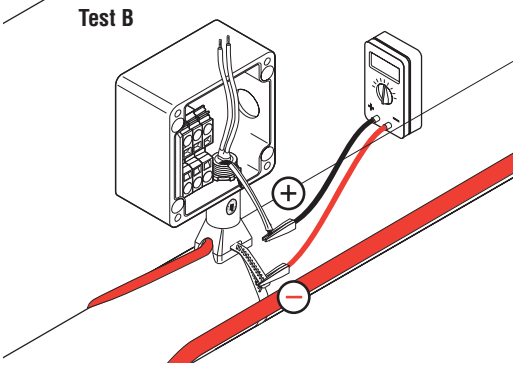

9.3 Power Check

The power output of Self-Regulating and Power-Limiting cable is temperature-sensitive and requires the following special procedure to determine its value:

1. Power the heating cable and allow it to stabilize for 10 minutes, then measure current and voltage at the junction box. If a thermostat or controller is used, refer to details below.
2. Check the pipe temperature under the thermal insulation at several locations.
3. Calculate the power (watts/ft) of the heating cable by multiplying the current by the input voltage and dividing by the actual circuit length.

$$\text{Power (w/ft or m)} = \frac{\text{Volts (Vac) x Current (Amps)}}{\text{Length (ft or m)}}$$

Ambient-sensing controlled systems

If the actual ambient temperature is higher than the desired thermostat setting, turn the thermostat setting up high enough to turn on the system, or (with some models) manually set the selector switch to the ON position.

- Turn on the main circuit breaker.
- Turn on the branch circuit breakers.
- After a minimum of ten minutes, measure the voltage, amperage, ambient temperature, and pipe temperature for each circuit and record the values in the “Installation and Inspection Record” (refer to Section 11). This information is needed for future maintenance and troubleshooting.
- When the system is completely checked out, reset the thermostat to the proper temperature.

Line-sensing controlled systems

Set the thermostat to the desired control temperature, or to a setting high enough to turn the circuit on if the pipe temperature is above the control temperature.

- Turn on the main circuit breaker.
- Turn on the branch circuit breakers.
- Allow the system to reach the control point. This may take up to four hours for most circuits. Large, liquid-filled pipes may take longer.

- Measure the voltage, amperage, and pipe temperature for each circuit and record the values in the “Installation and Inspection Record” (refer to Section 11). This information is needed for future maintenance and troubleshooting.
- When the system is completely checked out, reset the thermostat to the proper temperature.

Control and monitoring systems

Refer to the installation instructions supplied with the product for commissioning tests and records.

9.4 Fault Location Tests

Fault location

There are three methods used for finding a fault within a section of heating cable: the ratio method, 1/R method and the capacitance method. The capacitance method can also be used to determine total heating-cable length.

Ratio test method

The ratio method uses resistance measurements taken at each end of the heating cable to approximate the location of a **bus wire short**. A shorted heating cable could result in a tripped circuit breaker or a cold section of pipe. If the resistance can be read on a standard ohm meter this method can also be used to find a fault from a bus wire to the ground braid. This type of short would trip a GFPD and show a failed Megger™ reading.

Measure the bus-to-bus heating-cable resistance from the front end (measurement A) and the back end (measurement B) of the suspected section.

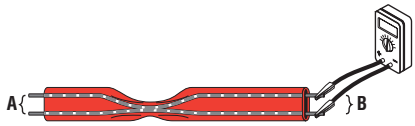

The approximate location of the bus wire short, expressed as a percentage of the heating-cable length from the front end is:

Fault location: $D = \frac{A}{(A + B)} \times 100$

Example: A = 1.2 ohms
B = 1.8 ohms

Fault location: D = 1.2 / (1.2 + 1.8) x 100
= 40%

The fault is located 40% into the circuit as measured from the front end.

To locate a low resistance ground fault, measure between bus and braid.

The approximate location of the fault, expressed as a percentage of the heating-cable length from the front end is:

Fault location: $D = \frac{A}{(A + B)} \times 100$

Example: A = 1.2 ohms
B = 1.8 ohms

Fault location: D = 1.2 / (1.2 + 1.8) x 100
= 40%

The fault is located 40% into the circuit as measured from the front end.

1/R method

The I/R method uses the core resistance of the heating cable to approximate the location of a fault when the heating cable has been severed and the bus wires have not been shorted together. A severed cable may result in a cold section of pipe and many not trip the circuit breaker.

Measure the bus-to-bus heating cable resistance from the front end (measurement A) and the back end (measurement B) of the suspect section. Since self-regulating cables are a parallel resistance, the ratio calculations must be made using the conductance (1/R) of the cable

The approximate location of the fault, expressed as a percentage of the heating cable length from the front end, is:

Fault location: $D = \frac{1/A}{(1/A + 1/B)} \times 100$

Example: A = 100 ohms
B = 25 ohms

Fault location: D = (1/100) / (1/100 + 1/25) x 100
= 20%

The fault is located 20% from the front end of the cicruit.

Capacitance test method

This method uses capacitance measurement (nF) to approximate the location of a fault where the **heating cable has been severed**. It also gives an estimate of total heating-cable length in a non-severed circuit. This reading must be taken at the power connection and will only work when the heating cable has passed IR testing. This information is used to calculate the heating-cable output per linear foot or to determine if the maximum length has been exceeded.

Record the capacitance reading from one end of the heating cable. The capacitance reading should be measured between both bus wires twisted together (positive lead) and the braid (negative lead).

Multiply the measured capacitance with the heating-cable's capacitance factor as listed in the following table.

Example:

20XTV2-CT

Recorded capacitance	= 16.2 nF
Capacitance factor	= 10.1 ft/nF
Fault location	= 16.2 x 10.1 nF
	= 164 ft (50 m) from reading location

As an alternative, capacitance values from both the front and back end can be used. The ratio of one capacitance value taken from one end (A) divided by the sum of both A and B (A + B) and then multiplied by 100 yields the distance from the first end, expressed as a percentage of the heating circuit length.

Heating-cable capacitance factors

Cable Catalog No.	Capacitance Factor
3BTV1-CR	7.5
3BTV2-CT	
3BTV1-CR	
3BTV2-CT	
5BTV1-CR	7.5
5BTV2-CT	
5BTV1-CR	
5BTV2-CT	
8BTV1-CR	5.5
8TV2-CT	
8BTV1-CR	
8BTV2-CT	
10BTV1-CR	5.5
10BTV2-CT	
10BTV1-CR	
10BTV2-CT	
10QTVR1-CT	4.7
10QTVR2-CT	
15QTVR2-CT	

Cable Catalog No.	Capacitance Factor
15QTVR1-CT	3.3
20QTVR1-CT	
20QTVR2-CT	
5XTV1-CT-T3	10.8
5XTV2-CT-T3	11.1
10XTV1-CT-T3	10.3
10XTV2-CT-T3	10.7
15XTV1-CT-T3	9.7
15XTV2-CT-T3	9.9
20XTV1-CT-T2	9.3
20XTV2-CT-T2	10.1
5VPL1-CT	9.4
10VPL1-CT	
15VPL1-CT	
20VPL1-CT	
5VPL2-CT	
10VPL2-CT	
15VPL2-CT	
20VPL2-CT	

10 Troubleshooting Guide

Symptom	Probable Causes	Corrective Action
Low or inconsistent insulation resistance	Nicks or cuts in the heating cable. Short between the braid and heating-cable core or the braid and pipe.	Check power, splice, tee, and end connections for cuts, improper stripping distances, and signs of moisture. If heating cable is not yet insulated, visually inspect the entire length for damage, especially at elbows and flanges and around valves. If the system is insulated, disconnect heating cable section between power kits, splices, etc., and test again to isolate damaged section.
	Arcing due to damaged heating-cable insulation.	Replace damaged heating-cable sections and restrip any improper or damaged connections.
	Moisture present in the components.	If moisture is present, dry out the connections and retest. Be sure all conduit entries are sealed, and that condensate in conduit cannot enter power connection boxes. If heating-cable core or bus wires are exposed to large quantities of water, replace the heating cable. (Drying the heating cable is not sufficient, as the power output of the heating cable can be significantly reduced.)
	Test leads touching the junction box.	Clear the test leads from junction box and restart.
	High pipe temperature may cause low IR reading.	Retest at ambient, if necessary.
	Reference tests:	**Insulation Resistance Test, Visual Inspection**

Symptom	Probable Causes	Corrective Action
Circuit breaker trips	Circuit breaker is undersized. Start-up at too low a temperature. Connections and/or splices are shorting out.	Recheck the design for startup temperature and current loads. Do not exceed the maximum circuit length for heating cable used. Check to see if existing power wire sizing is compatible with circuit breaker. Replace the circuit breaker, if defective or improperly sized. Visually inspect the power connections, splices, and end seals for proper installation; correct as necessary.
	Physical damage to heating cable is causing a direct short.	Check for visual indications of damage around the valves, pump, and any area where there may have been maintenance work. Look for crushed or damaged insulation lagging along the pipe. Replace damaged sections of heating cable.
	Bus wires are connected at the end.	Check the end seal to ensure that bus wires are properly terminated per installation instructions. If a dead short is found, the heating cable may have been permanently damaged by excessive current and may need to be replaced.
	Nick or cut exists in heating cable or power feed wire with moisture present or moisture in connections.	Replace the heating cable, as necessary. Dry out and reseal the connections and splices. Using a megohmmeter, retest insulation resistance.
	GFPD is undersized (5mA used instead of 30mA) or miswired.	Replace undersized GFPD with 30mA GFPD. Check the GFPD wiring instructions.
	Reference tests:	**Insulation Resistance Test, Fault Location Test, Visual Inspection**

10 Troubleshooting Guide

Symptom	Probable Causes	Corrective Action
Low pipe temperature	Insulation is wet, or missing.	Remove wet insulation and replace with dry insulation, and secure it with proper weatherproofing.
	Insufficient heating cable was used on valves, supports, and other heat sinks.	Splice in additional heating cable but do not exceed maximum circuit length.
	Thermostat was set incorrectly.	Reset the thermostat.
	Improper thermal design used. Improper voltage applied.	Contact your Tyco Thermal Controls representative to confirm the design and modify as recommended.
	Thermocouple is not in contact with pipe.	Reinstall the thermocouple on the pipe.
	Reference tests:	**Power Check, Visual Inspection**

Symptom	Probable Causes	Corrective Action
Low or no power output	Low or no input voltage applied.	Repair the electrical supply lines and equipment.
	The circuit is shorter than the design shows, due to splices or tees not being connected, or the heating cable having been severed.	Check the routing and length of heating cable (use “as built” drawings to reference actual pipe layout). Connect all splices or tees. Locate and replace any damaged heating cables. Then recheck the power output.
	Improper component connection causing a high-resistance connection.	Check for loose wiring connections and rewire if necessary.
	Control thermostat is wired in normally open position.	Rewire the thermostat in the normally closed position.
	Pipe is at an elevated temperature.	Check the pipe temperature. Verify heater selection. Check the power output of the heating cable per the design vs. actual. Reduce pipe temperature if possible or contact your Tyco Thermal Controls representative to confirm design.
	The heating cable has been exposed to excessive temperature, moisture or chemicals.	Replace damaged heating cable. Check the pipe temperature. Check the power output of heating cable.
	Reference tests:	**Power Check, Fault Location, Visual Inspection**

11 Installation and Inspection Records

Tyco Thermal Controls Industrial Heat-Tracing

Installation and Inspection Record

Facility: _____

Circuit number: _____

Heating-cable type: _____

Circuit length: _____

		Commission				
Inspection date:						
Visual Inspection						
Visual inspection inside connection boxes for signs of overheating, corrosion, moisture, loose connections and other problems.						
Proper electrical connection, ground, and bus wires insulated over full length.						
Damaged or wet thermal insulation; damaged, missing, cracked lagging or weather-proofing; gaps in caulking.						
Covered end seals, splices, and tees properly labeled on insulation cladding.						
Control and Monitoring system checked for moisture, corrosion, set point, switch operation, capillary damage, and protection.						
Insulation resistance (Megger™) test		**Ohms**	**Ohms**	**Ohms**	**Ohms**	**Ohms**
Test A	500 Vdc					
(bus to braid)	1000 Vdc					
	2500 Vdc					
Test B	500 Vdc					
(braid to pipe)	1000 Vdc					
	2500 Vdc					
Power check						
Circuit voltage						
Panel	(Vac)					
Circuit end*	(Vac)					
Circuit amps after 10 min.	(Amps)					
Pipe temperature	(°F)					
Power = Volts x amps/ft	(watts/ft)					

* Commissioning only

FM Required Installation Record for Class I, Division 1, Hazardous Locations

To complete the FM approval process, this complete form must be returned to the Tyco Thermal Controls Customer Service Center (fax number (800) 527-5703).

Company name _____ **Purchase order no.** _____

Circuit ID no. _____ **Ref drawing(s)** _____

Area

Autoignition temp. (AIT): _____ Group classification: _____

Heater circuit

Heater type: _____
Supply voltage: _____ Circuit length: _____
Maximum pipe temp: _____ Temp ID (T-rating): _____

Components

Power connection: _____ Splice: _____
Tee: _____ End seal: _____

Ground-fault equipment

Make and model: _____ Device trip level: _____

Installation Instructions

Correct components per manufacturer's specification: _____
Seal fittings opened and inspected (properly poured): _____
Ground-leakage device tested: _____

Insulation resistance testing

Use 2500 Vdc for Self-Regulating and Power-Limiting cables

Instrument used: _____ Calibration date: _____

As measured on the pipe before insulation installed*	**Test value**	**Date**	**Initials**
Insulation resistance between conductor and braid (Test A)			
Insulation resistance between braid and pipe (Test B)			

As measured after insulation installed*	**Test value**	**Date**	**Initials**
Insulation resistance between conductor and braid (Test A)			
Insulation resistance between braid and pipe (Test B)			

* minimum insulation resistance must be 1000MΩ

Circuit ready to commission

Prepared by _____ Company _____ Date _____

Approved by _____ Company _____ Date _____

Tyco Thermal Controls

Tyco, DigiTrace, Raychem and TraceCalc Pro are trademarks of
Tyco Thermal Controls LLC or its affiliates.
Megger is a trademark of Megger Limited

Important: *All information, including illustrations, is believed to be reliable. Users, however, should independently evaluate the suitability of each product for their particular application. Tyco Thermal Controls makes no warranties as to the accuracy or completeness of the information, and disclaims any liability regarding its use. Tyco Thermal Controls' only obligations are those in the Tyco Thermal Controls Standard Terms and Conditions of Sale for this product, and in no case will Tyco Thermal Controls or its distributors be liable for any incidental, indirect, or consequential damages arising from the sale, resale, use, or misuse of the product. Specifications are subject to change without notice. In addition, Tyco Thermal Controls reserves the right to make changes—without notification to Buyer—to processing or materials that do not affect compliance with any applicable specification.*

tyco

Flow Control

Worldwide Headquarters
Tyco Thermal Controls
300 Constitution Drive
Menlo Park, CA 94025-1164
USA
Tel (800) 545-6258
Fax (800) 527-5703
info@tycothermal.com
www.tycothermal.com

Canada
Tyco Thermal Controls
250 West St.
Trenton, Ontario
Canada K8V 5S2
Tel (800) 545-6258
Fax (800) 527-5703

© 2002, 2003 Tyco Thermal Controls LLC Printed in USA H57274 04/03

Raychem®

Accessories

D100
0AT0
011A

Visit www.tycothermal.com for more information on our ten-year extended warranty.

Attachment Products

Catalog number	Part number	Description
GT-66 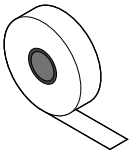	C77220-000	66 ft (20 m) roll of glass tape for attaching heating cable to pipe. Not for stainless steel pipes or for installation temperatures below 40°F (5°C).
GS-54 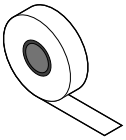	C77221-000	54 ft (16.5 m) roll of glass tape for attaching heating cable to pipe. For stainless steel pipes or for any installation below 40°F (5°C).
AT-180 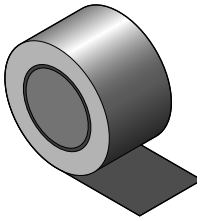	158139-000	180 ft (55 m) roll of aluminum tape for attaching heating cables and thermostat sensors to pipes and tanks. Minimum installation temperature: 32°F (0°C).
Pipe straps 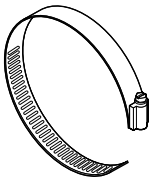	PS-01 C77211-000	For conduit ≤ 1"
	PS-03 C77212-000	For components on pipes with dimensions 1" – 2"
	PS-10 C77213-000	For components on pipes with dimensions 2" – 10"
	PS-20 C77216-000	For components on pipes with dimensions 10" – 19.5"
		Used to secure connection components and brackets to pipes. Order by pipe diameter, as shown above.

Labels

Catalog number	Part number	Description
ETL	C77203-000	"Electric Traced" label for identifying traced pipes and tanks.

Gland Entry Kit

Catalog number	Part number	Description	Kit Contents Quantity	Kit Contents Description
C75-100-A	000539-000	A NEMA 4X-rated gland kit used to transition heating cables into a junction box when making connections off of a pipe or tank. It may be used for power, splice, or tee connections. For use with Raychem® brand BTV, QTVR, XTV, KTV(1), VPL, and LBTV2-CT(2) heating cables. The kit does not include the junction box, flexible tubing, or tape that are required to make a complete connection. (1) For KTV only, order PMK-GP-10 grommet (P/N 700823) (2) For LBTV2-CT only, order HCS-100-A heat-shrink core sealer (P/N 257649) and PMK-GK-10 grommet (P/N 222724)	1	Red grommet
			1	Gland with threaded inserts
			1	Gland with screws
			1	Gland gasket
			1	Locknut
			1	Green/yellow tube
			1	CS-100 core sealer
			1	Terminal block

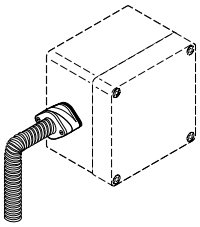

Single-Entry Transition Kit

Catalog number	Part number	Description	Kit Contents Quantity	Kit Contents Description
JS-100-A	166639-000	Junction box stand for use with Raychem brand BTV, QTVR, XTV, KTV, and VPL heating cables. A separate customer-supplied NEMA 4X junction box is required.	1	Stand assembly
			1	Lubricant
			1	Adapter for small pipes
			1	Cable tie
			1	Green/yellow tube
			1	CS-100 cold-applied core sealer
			1	JS-100 transition
			1	1-inch locknut

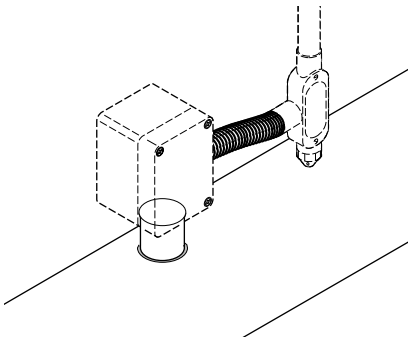

Cold-Applied Core Sealer

Catalog number	Part number	Description
CS-100-A	232949-000	Replacement cold-applied core sealer for Raychem brand BTV, QTVR, XTV, KTV, and VPL heating cables.

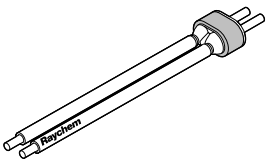

Conduit Drain

Catalog number	Part number	Description
JB-DRAIN-PLUG-3/4IN	278621-000	Tyco Thermal Controls recommends the use of this 3/4-in conduit drain with each JBS-100 and JBM-100, and other enclosures with associated conduits, to prevent condensate from collecting in the box.

Brackets, Adapters

Catalog number	Part number	Description
JBS-SPA 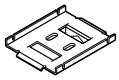	E90515-000	Adapter for mounting E-100, JBS-100, and JS-100 to small pipe.
JBM-SPA 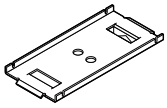	D55673-000	Adapter for mounting JBM-100 and T-100 to small pipe.
SB-100-T 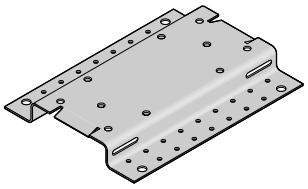	279613-000	Adapter for mounting E-100, E-100-L, and JBS-100 connection components on a tank surface.
UMB 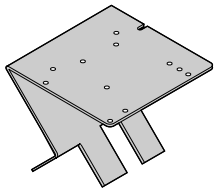	263757-000	Universal mounting bracket for mounting thermostats and other equipment on a pipe.
JB-SB-25 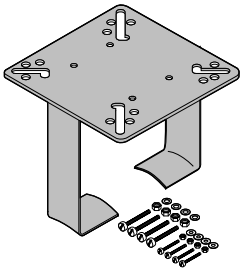	471139-000	Stainless-steel mounting bracket for RAYSTAT-EX-03-A thermostat.

Raychem

JBM-100-A

Power Connection, Powered Splice, Powered Tee, Dual Power Connection, Splice or Tee with Junction Box

Installation Instructions

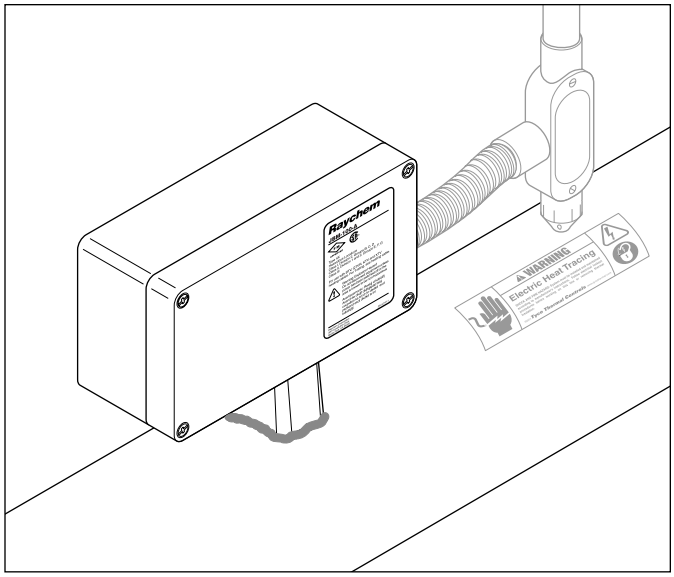

Description

The JBM-100-A is a NEMA 4X-rated connection kit. It is designed for use with Raychem® BTV-CR, BTV-CT, QTVR-CT, XTV-CT, KTV-CT and VPL-CT industrial parallel heating cables. The kit can be used to connect one, two, or three heating cables to power, to connect two separate heat-trace circuits, or to splice or tee up to three heating cables.
Note: For two or more heating cables powered by one circuit, the total length of all heating cables entering the box must not exceed the maximum circuit length published in the applicable heating cable data sheet.

This kit may be installed at temperatures as low as –40°F (–40°C). For easier installation store above freezing until just before installation.

For technical support call Tyco Thermal Controls at (800) 545-6258.

Tools Required

- Wire cutters
- Utility knife
- Needle nose pliers
- 3/8" hex key (required for splice and tee connections)
- Marking pen
- 1/4" or smaller slotted screwdriver
- Large slotted screwdriver
- Adjustable pliers
- Wire stripper (for VPL-CT)

Additional Materials Required

- Pipe strap
- GT-66 or GS-54 glass cloth tape

Optional Materials

- Recommended conduit drain: JB-DRAIN-PLUG-3/4IN P/N 278621-000
- Small pipe adapter for 1" (25 mm) and smaller pipes: Catalog number JBM-SPA P/N D55673-000

Approvals

Hazardous Locations

CLI, ZN1, AEx e II* [1]	FM APPROVED	Class I, Div. 2, Groups A, B, C, D
		Class II, Div. 1 and 2, Groups E, F, G
Ex e II T*	CSA	Class III
		Temp Code*

[1] Except VPL
*For system Temperature Code, see heating cable or design documentation.

Kit Contents

Item	Qty	Description
A	1	Stand assembly
B	2	Grommet plugs
C	1	Box plug, o-ring, and locknut
D	1	Cable lubricant
E	3	Core sealers
F	3	Green/yellow tubes
G	1	Box with terminals (max: 3/4" conduit & 8 AWG wire)
H	1	Lid
I	1	Spanner
J	1	Strain relief

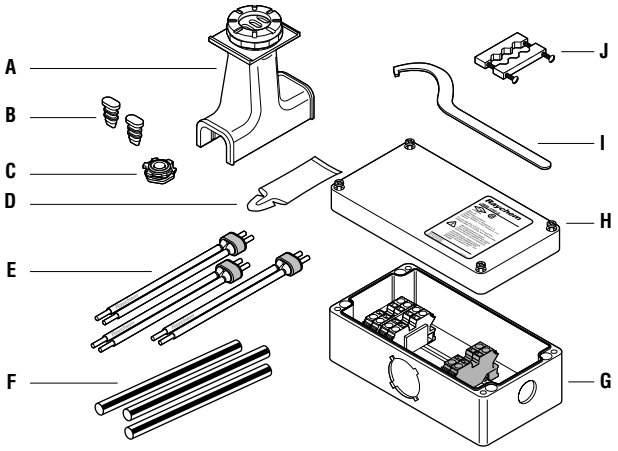

⚠ WARNING:

This component is an electrical device that must be installed correctly to ensure proper operation and to prevent shock or fire. Read these important warnings and carefully follow all of the installation instructions.

- To minimize the danger of fire from sustained electrical arcing if the heating cable is damaged or improperly installed, and to comply with the requirements of Tyco Thermal Controls, agency certifications, and national electrical codes, ground-fault equipment protection must be used. Arcing may not be stopped by conventional circuit breakers.
- The power connection may be powered by more than one circuit. Be sure all power sources are de-energized before opening box.
- Component approvals and performance are based on the use of Tyco Thermal Controls-specified parts only. Do not use substitute parts or vinyl electrical tape.
- The black heating cable core and fibers are conductive and can short. They must be properly insulated and kept dry.
- Damaged bus wires can overheat or short. Do not break bus wire strands when scoring the jacket or core.
- Keep components and heating cable ends dry before and during installation.
- Use only fire-resistant insulation materials, such as fiberglass wrap or flame-retardant foam.

⚠ CAUTION:

Health Hazard: Prolonged or repeated contact with the sealant in the core sealer may cause skin irritation. Wash hands thoroughly. Overheating or burning the sealant will produce fumes that may cause polymer fume fever. Avoid contamination of cigarettes or tobacco. Consult MSDS RAY5510 for further information.

CHEMTREC 24-hour emergency telephone: (800) 424-9300.

Non-emergency health and safety information: (800) 545-6258.

Heating cable types

- Determine heating cable type and continue as shown.

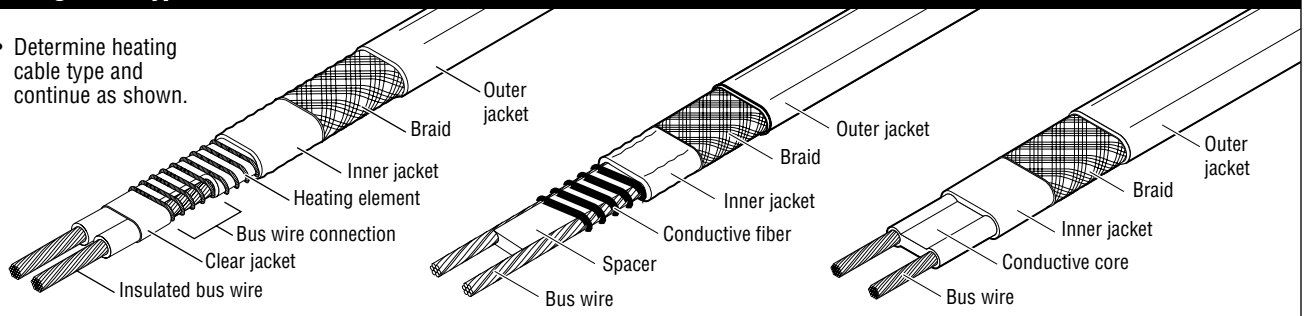

VPL
Go to Step 1a

XTV-CT, KTV-CT
Go to Step 1b

BTV-CR, BTV-CT, QTVR-CT
Go to Step 1b

1a

- Cut each heating cable 12" (30 cm) from the center of the first indentation, cut at a 45° angle.

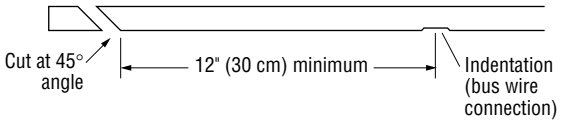

- After heating cable has been cut, align indentations. Allow approximately 24" (60 cm) of heating cable for installation.

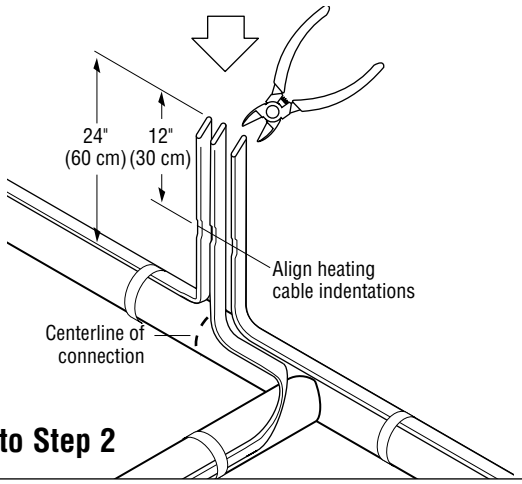

Go to Step 2

1b

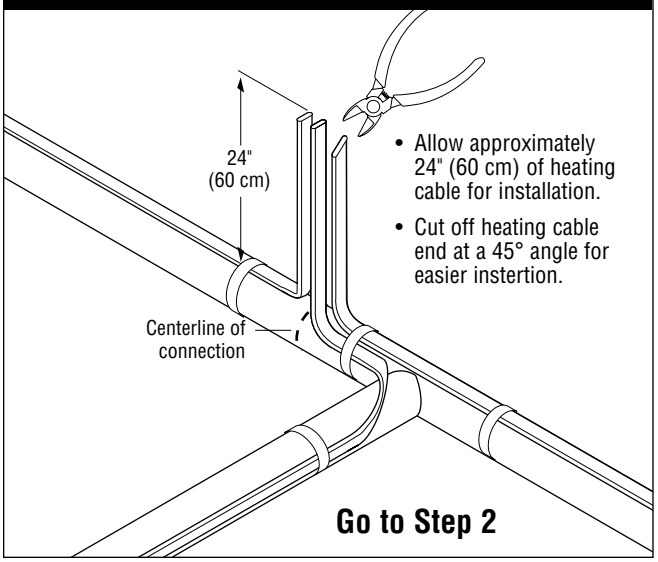

- Allow approximately 24" (60 cm) of heating cable for installation.
- Cut off heating cable end at a 45° angle for easier instertion.

Go to Step 2

2

Complete steps 2 through 6 for each heating cable before going on to the next length of heating cable.

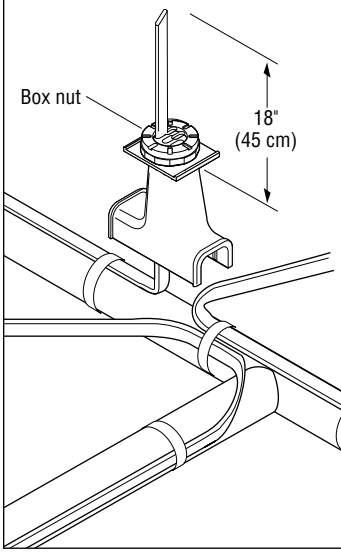

- **Do not remove box nut from stand.** Push heating cable through stand and nut as shown. Use cable lubricant if needed.
- Square off cable end with 90° angle cut.

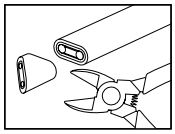

- Do not attach stand to pipe until step 8.

3

- Lightly score outer jacket around and down as shown.
- Bend heating cable to break jacket at score, then peel off jacket.

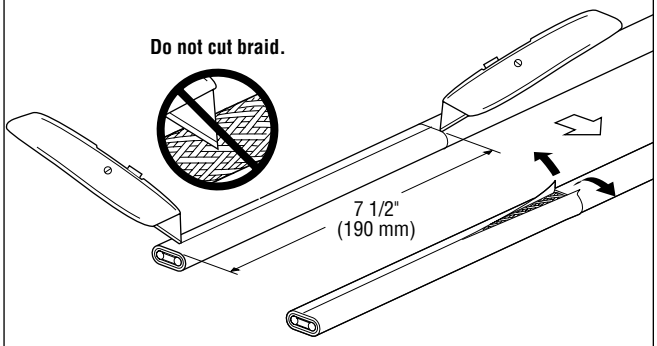

4

- Determine heating cable type and continue as shown.

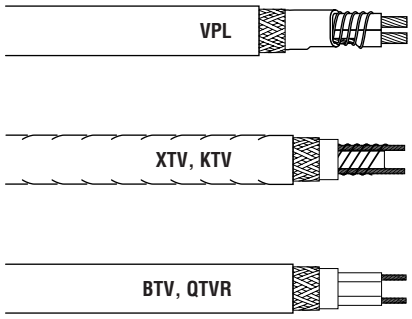

Go to Step 5a

Go to Step 5b

Go to Step 5c

5a

- Push braid back and bunch as tight as possible.
- Lightly score inner jacket around and down as shown.
- Peel off inner jacket.
- Unwind heating element, cut and remove as shown.
- Lightly score clear jacket around and down as shown.
- Bend heating cable to break jacket at the score then peel off jacket.
- Push braid forward. Use a screwdriver to open braid.
- Bend heating cable and work it through opening in braid.
- Remove insulation from ends of bus wires.
- Pull braid tight to make pigtail.

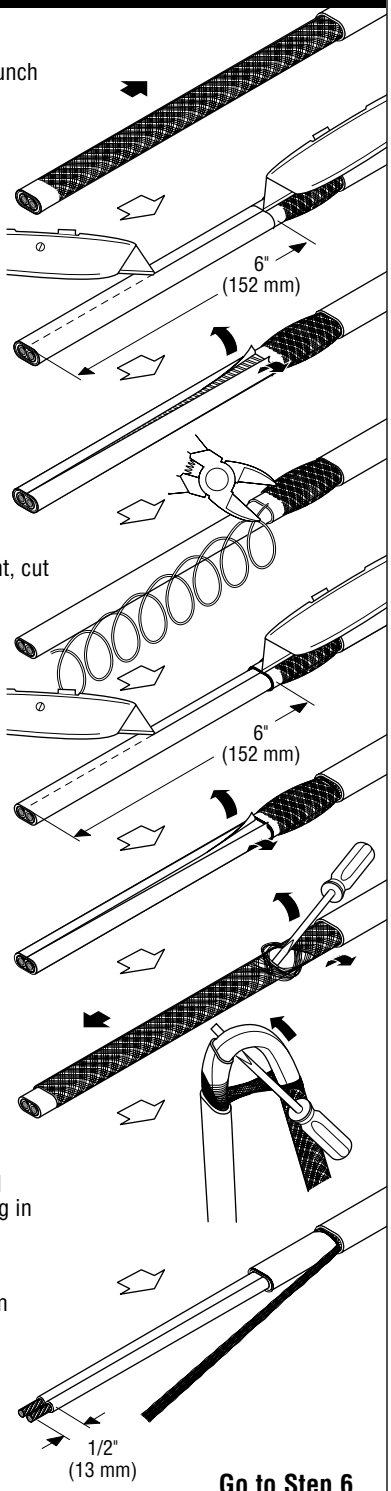

Go to Step 6

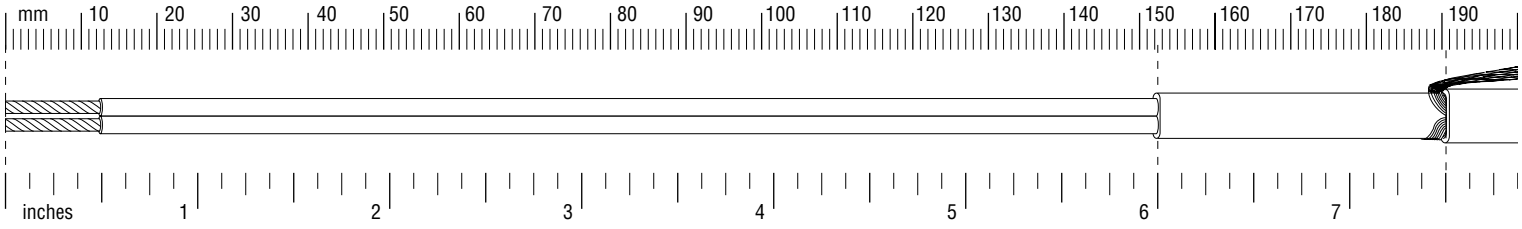

5b

XTV, KTV

- Push braid back to create a pucker.
- At pucker use a screwdriver to open braid.
- Bend heating cable and work it through opening in braid.
- Lightly score inner jacket around and down as shown.
- Peel off inner jacket.
- Cut and remove all fiber strands.
- Score and remove center spacer.
- Remove any remaining fiber material from bus wires.
- Pull braid tight to make pigtail.

6 1/2" (165 mm)

Go to Step 6

5c

BTV, QTVR

- Push braid back to create a pucker.
- At pucker use a screwdriver to open braid.
- Bend heating cable and work it through opening in braid.
- Lightly score inner jacket around and down as shown.
- Peel off inner jacket.
- Notch core.
- Peel bus wire from core.
- Score core between bus wires at inner jacket.
- Bend and snap core.
- Peel core from bus wire.
- Remove any remaining core material from bus wires.
- Pull braid tight to make pigtail.

6 1/2" (165 mm)

1/4" (5 mm)

Go to Step 6

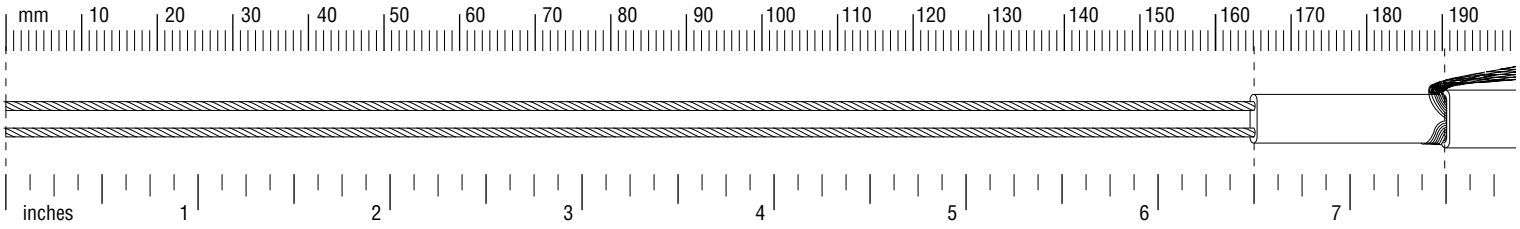

6

- Mark the jacket as shown.

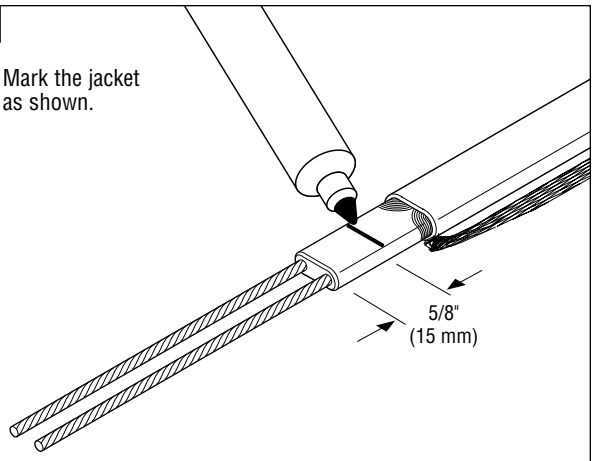

7

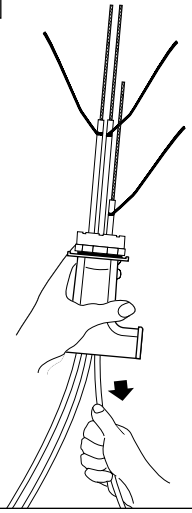

- Pull heating cable back into stand as shown. Use cable lubricant if needed.

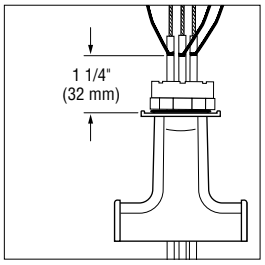

- Repeat steps 2 through 7 for other heating cables before continuing to step 8.

8

- Fasten stand to pipe. Do not pinch heating cables.
- Loop and tape extra heating cable to pipe.

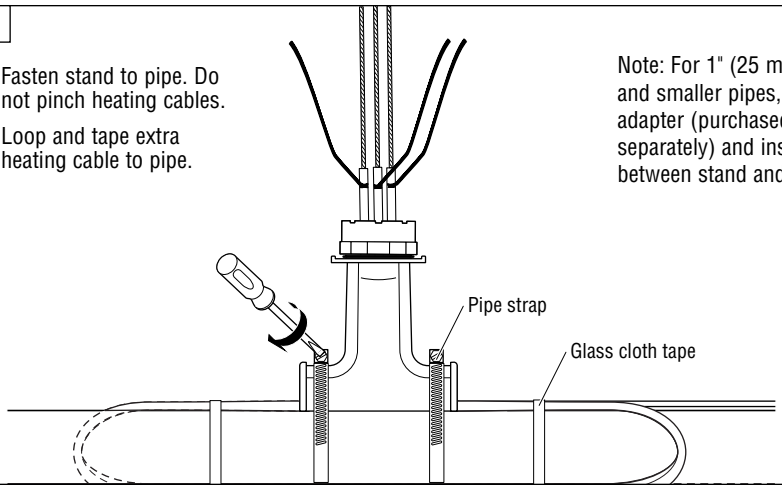

Note: For 1" (25 mm) and smaller pipes, use adapter (purchased separately) and install between stand and pipe.

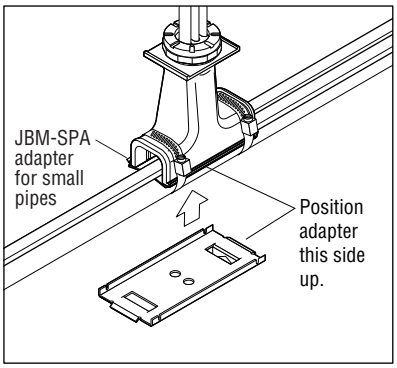

9

- Remove box nut.

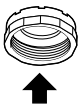

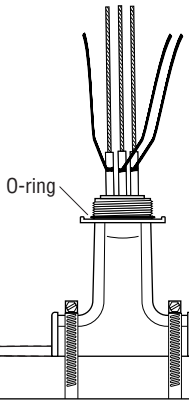

- Install grommet plugs in unused openings.

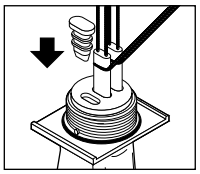

10

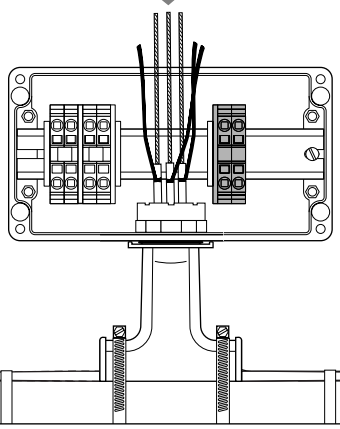

- Place junction box onto stand. Align key ways in large box hole with alignment feature on stand.
- Put box nut back onto stand.
- Tighten box nut with spanner.

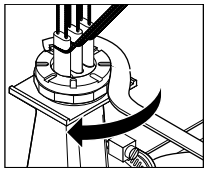

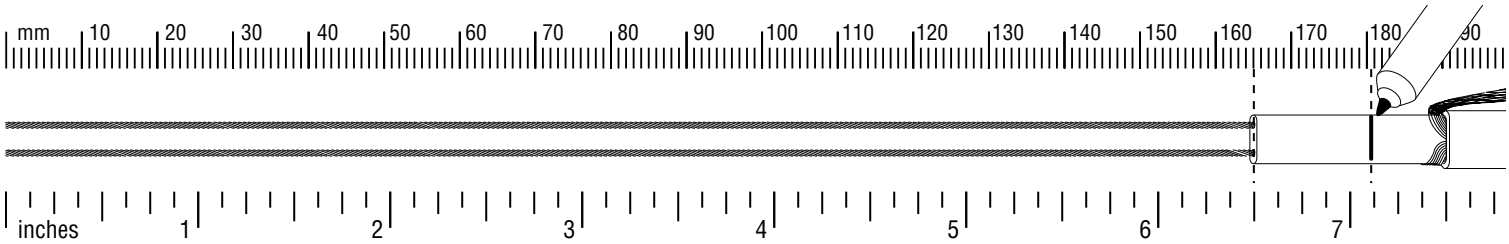

11

- Slide strain relief over heating cables, down onto box nut.
- Secure strain relief by tightening screws.

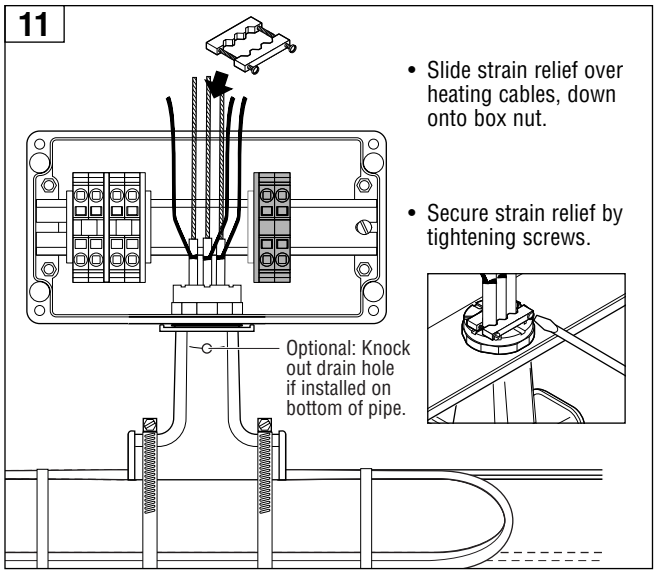

12

⚠ **CAUTION: Health Hazard.**

Wash hands after contact with sealant. Consult material safety data sheet RAY5510.

- If needed, re-twist and straighten bus wires, then insert bus wires into guide tubes as shown.

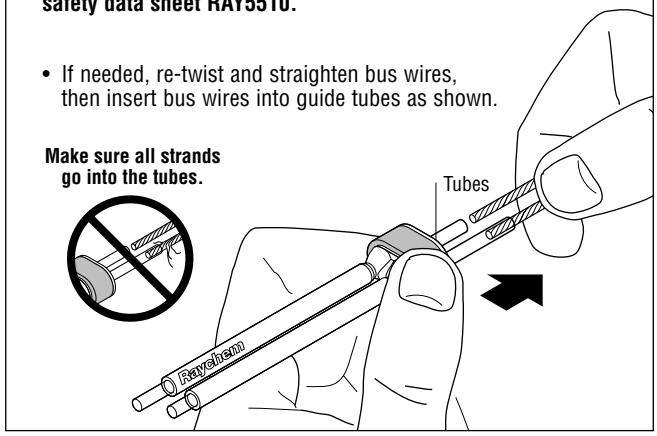

13

- Push core sealer onto the heating cable to the mark made in step 6.

Note: Extra force may be required for larger cables or at lower temperatures.

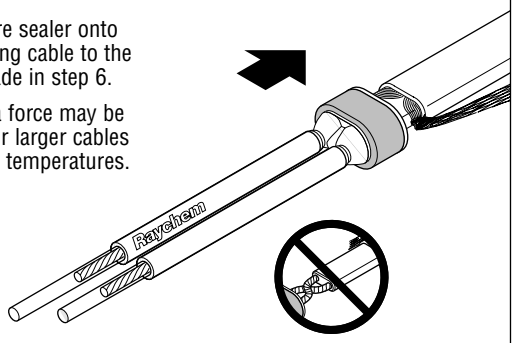

Make sure the bus wires do not kink, bunch, or crossover.

14

- Remove the guide tubes and dispose of them in a plastic bag.
- Slip the green/yellow tube onto the braid.

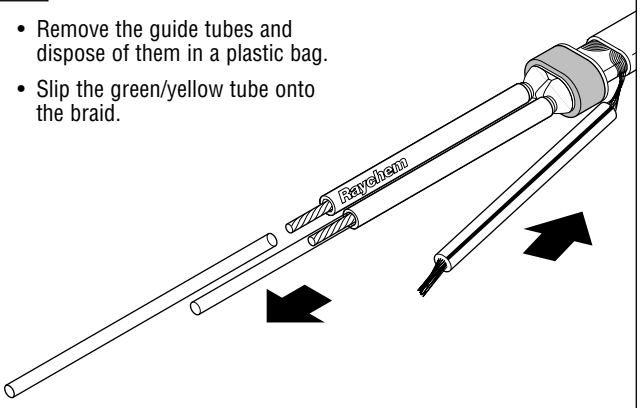

15

- Trim bus wires and braid.
- Repeat steps 12 through 15 for all heating cables.

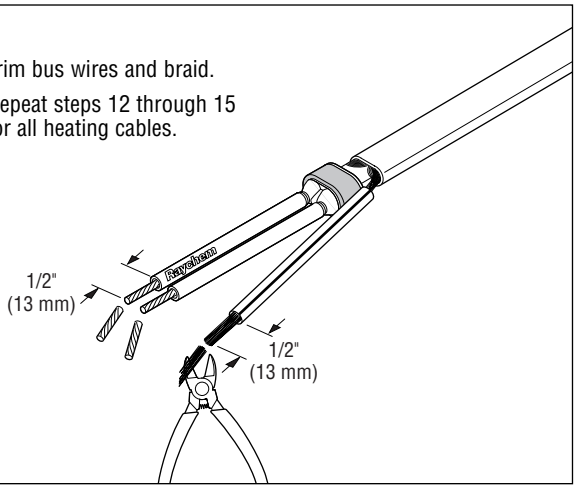

16

Finished view of installed core sealers.

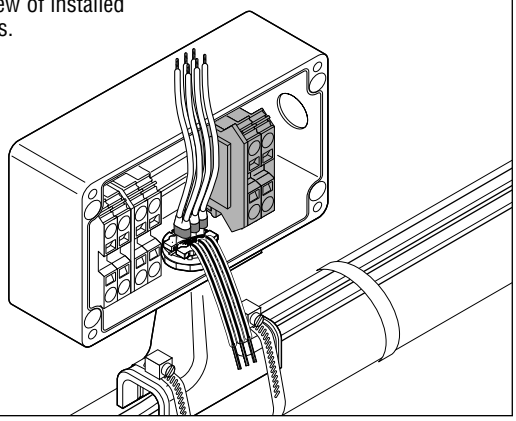

17

This kit uses spring clamp style terminals.

Terminals use a steel spring to clamp the wire to provide improved vibration resistance, reduced maintenance and faster installation.

To connect wires, firmly insert a slotted screwdriver into the square hole (①) to open the spring. When fully inserted, the screwdriver will lock into place, allowing you to remove your hand and insert the wire into the round hole (②). Remove the screwdriver to clamp the wire. The wire is held securely against the bus bar for low contact resistance over time without the need to periodically retighten screws.

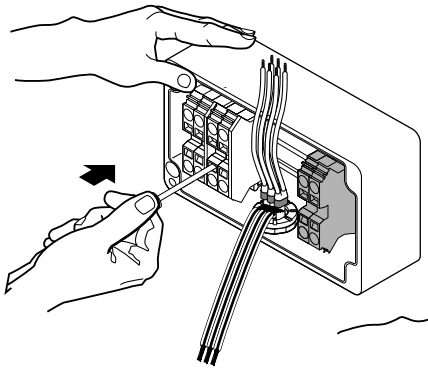

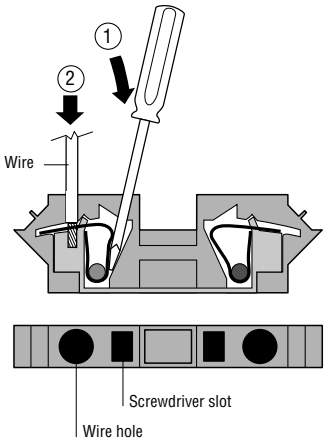

- Refer to wiring diagram, step 18a, 18b, or 18c.
- Push screwdriver FIRMLY into square hole.

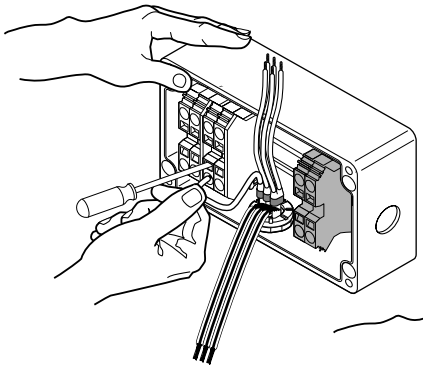

- Insert wire into round hole.
- Use green terminal for braid and ground wires.

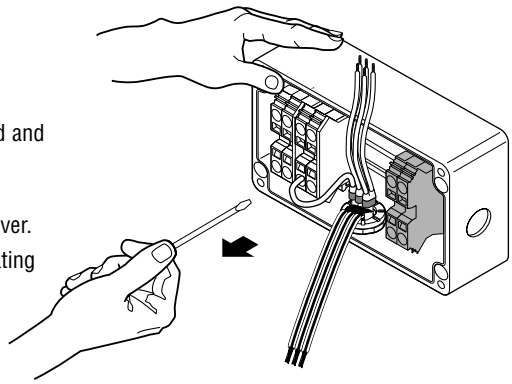

- Remove screwdriver.
- Repeat for all heating cables.

18a Splice Wiring

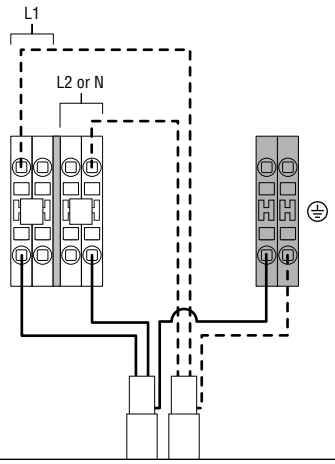

18b Tee Wiring

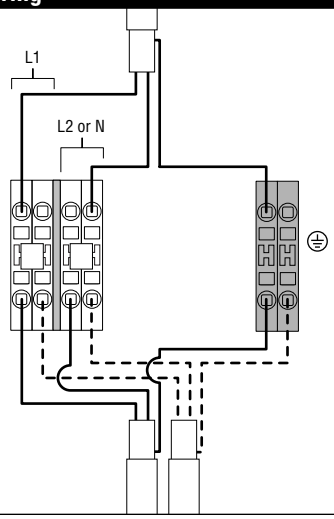

18c Power Connection Wiring

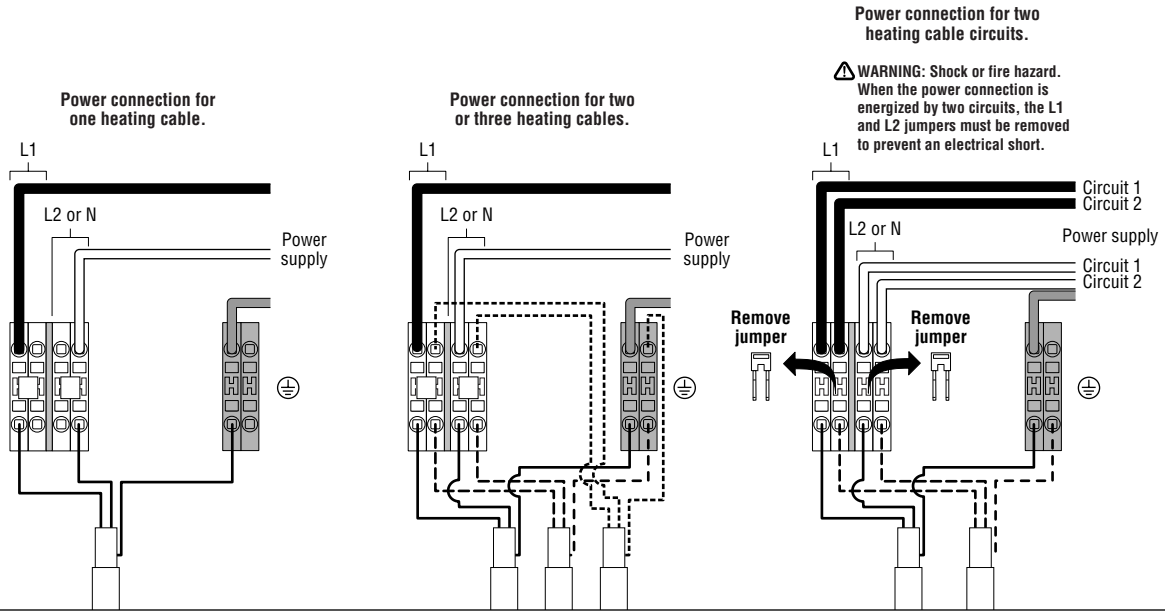

19a If used as a power connection

- Install conduit and fittings as shown. To minimize loosening due to vibration, use flexible conduit.
- Pull in power and ground wires, strip off insulation, and terminate.

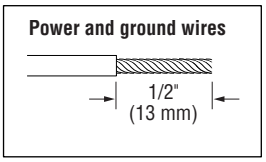

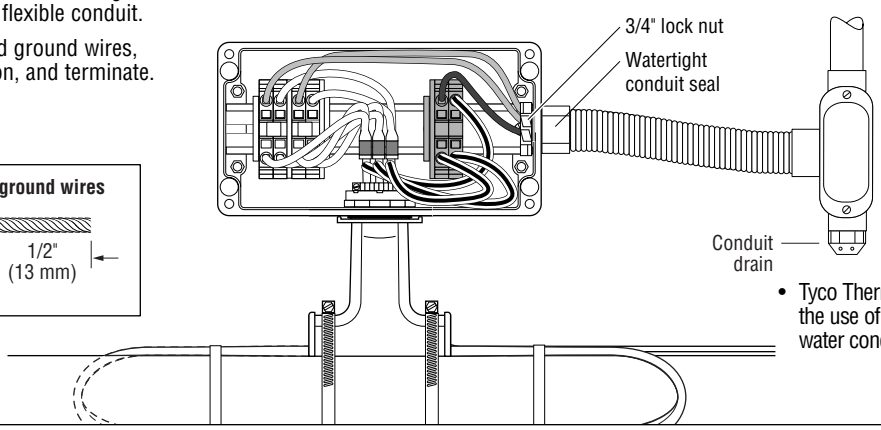

Make sure conductors are not exposed.

- Tyco Thermal Controls recommends the use of a conduit drain to prevent water condensation build-up.

19b If used as a splice or tee connection

- Install box plug.

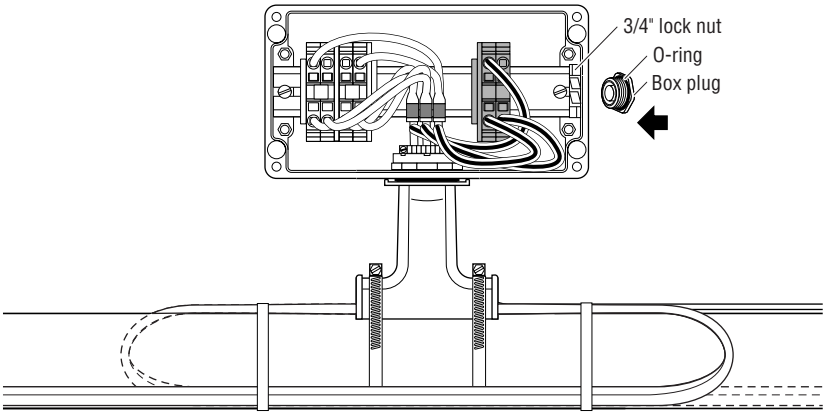

20

- Install lid.
- Apply insulation and cladding.
- Weather-seal the stand entry.
- Leave these instructions with the end user for future reference.

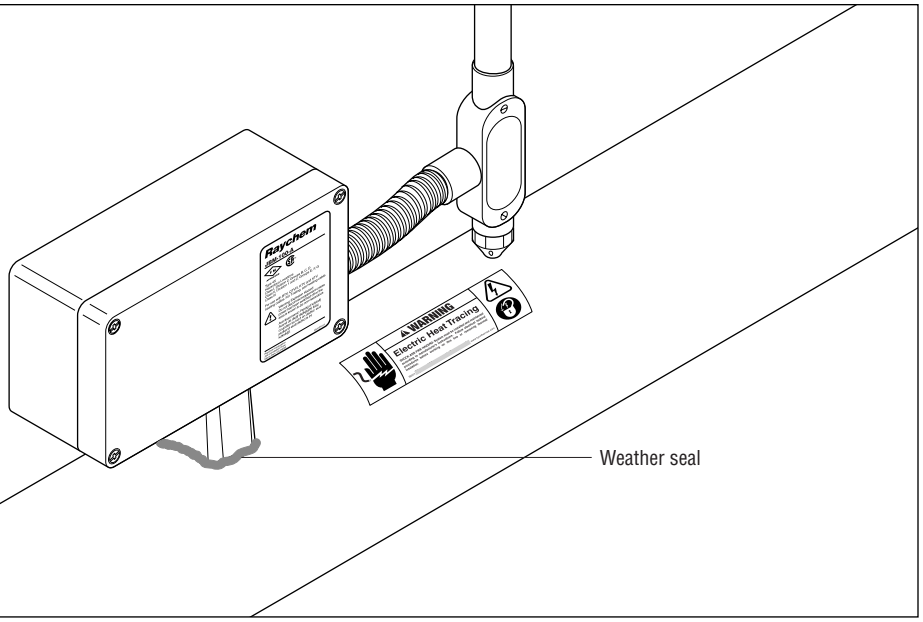

Tyco and Raychem are trademarks of Tyco Thermal Controls LLC or its affiliates.

Worldwide Headquarters
Tyco Thermal Controls
300 Constitution Drive
Menlo Park, CA 94025-1164
USA
Tel (800) 545-6258
Fax (800) 527-5703
info@tycothermal.com
www.tycothermal.com

Important: *All information, including illustrations, is believed to be reliable. Users, however, should independently evaluate the suitability of each product for their particular application. Tyco Thermal Controls makes no warranties as to the accuracy or completeness of the information, and disclaims any liability regarding its use. Tyco Thermal Controls' only obligations are those in the Tyco Thermal Controls Standard Terms and Conditions of Sale for this product, and in no case will Tyco Thermal Controls or its distributors be liable for any incidental, indirect, or consequential damages arising from the sale, resale, use, or misuse of the product. Specifications are subject to change without notice. In addition, Tyco Thermal Controls reserves the right to make changes—without notification to Buyer—to processing or materials that do not affect compliance with any applicable specification.*

©1999, 2000, 2002 Tyco Thermal Controls LLC Printed in USA PN 377773-000 H56344 11/02

Childers®

Mastics, Coatings, Adhesives, Sealants

VI-CRYL®
CP-10 (Trowel Grade)
CP-11 (Spray/Brush)
Weather Barrier Coatings

DURABLE WATER BASED VINYL-ACRYLIC MASTIC COATING FOR ALL THERMAL INSULATIONS

DESCRIPTION
VI-CRYL® CP-10/11 weather barrier coating is a tough, durable, and fire-resistive water based mastic for all types of thermal insulation and masonry surfaces. It is very thixotropic - it looks heavy but spreads easily. It is available in a variety of standard and special fade-resistant colors. It is outdoor rated and U.V. resistant.

USES
VI-CRYL CP-10/11 weather barrier coating is unsurpassed for the mechanical protection and weatherproofing of thermal insulations both outdoors and indoors, in hot, cold, and dual-temperature service. However, since it is a 'breathing' coating (vapors under pressure will pass through it) it should only be used over insulations in low-temperature, or dual-temperature service when the insulations themselves are vapor barriers. VI-CRYL CP-10/11 has also found use throughout the thermal insulation industry as a coating used over closed cell polyethylene and polyurethane foam insulations. Industry experience has demonstrated that all weather barrier coatings may blister when applied over polystyrene board. This effect may be limited by the use of white colored coatings. VI-CRYL CP-10/11 weather barrier coating in its Metallic Gray color is the ideal companion product to Aluminum and Stainless Steel Jacketing. VI-CRYL CP-10/11 gives superior mechanical and chemical protection to any irregular shape or surface where the application of Childers Metal Jacketing Systems is impractical.

ADVANTAGES
In the wet state, VI-CRYL CP-10/11 weather barrier coatings is non-flammable. It contains no solvents that will attack insulations or facings. It is surprisingly easy to apply. The cured film is tough, flexible, and resists most common chemicals and many solvents. It is fire-resistive: its flame spread index being within the range of acceptance of government and industrial agencies.

APPLICATION
VI-CRYL CP-10/11 weather barrier coating is easy to apply by Trowel, Brush or Spray. Its thixotropic consistency yields a smooth, attractive finish even over rough substrates; it readily fills gaps and imperfections. VI-CRYL CP-10/11 coating is normally applied with glass fiber reinforcing mesh.

CERTIFIED
That this product meets the requirements of NFPA STandard 90-A and 90-B. Qualifies under Coast Guard Specification 164.012. This product has been testing according to ASTM E-84 (Surface Burning Characteristics of Building Materials).

CP-10/11 contains no asbestos, lead, mercury, or mercury compounds.

Visit us on the web at www.fosterproducts.com

REGISTERED COMPANY ISO 9001 SGS

COLORS	TROWEL	SPRAY/BRUSH
White	*10*	*11*
Metallic Gray	*10-1*	*11-1*
Black	*10-2*	*11-2*

(Other colors are available on special order)

WET WEIGHT
11.4 lbs./U.S. gal. (1.37 kg/liter)

AVERAGE NON-VOLATILE
60% to 64% by volume (64% by weight)

SERVICE TEMPERATURE RANGE
(Temperature to which dry coating is subjected.)
-40ºF to 180ºF
(-40ºC to 83ºC)

APPLICATION TEMPERATURE RANGE
40ºF to 100ºF
(4ºC to 38ºC)

DRYING TIME
Touch - 2-4 hours
Through - 24-36 hours
(Drying time will vary depending upon film thickness, temperature and humidity.)

COVERAGE
6 U.S. gal./100 sq. ft. (2.4 l/sq.m)
(Varies with substrate and membrane.)

CLEAN-UP
Warm, soapy water (wet) xylol (dry)

WATER VAPOR PERMEANCE ASTM E-96
Greater than 1.0 perm for 1/16 inch (0.16cm) dry film. (Procedure B)

CLASSIFIED UL

Underwriter's Laboratories Inc.®
CLASSIFIED
282U
General Purpose Coating
Surface Burning Characteristics
R3593

Surface:	Applied to inorganic reinforced cement board
Flame Spread:	10
Smoke Developed:	40
Number of Coats:	1
Coverage:	16.6 sq. ft/gal.
Flash Point of Liquid Coating, Closed Cup:	No flash to boiling.

8502
11/02

Specialty Construction Brands, Inc.

Customer Service
800-231-9541

315 South Hicks Road
Palatine, IL 60067-6972

Fax
800-942-6856

Suggested Specifications

VI-CRYL® CP-10 CP-11

MASTIC FINISH over insulation shall be VI-CRYL CP-10/11 weather barrier coating. It shall be applied in two coats. A tack coat is to be applied at a rate of two gallons per 100 sq. ft. (.81 l/sq. m.). Apply top coat while tack coat is still wet. There shall be no voids or holidays and the mastic shall be trowelled, sprayed or wet-brushed to a smooth even finish.

All adjoining insulated or uninsulated surfaces must be completely waterproofed and flashed. To effectively seal those locations where the VI-CRYL CP-10/11 coating meets adjoining insulated or uninsulated surfaces, or dissimilar weather proofing materials, CP-76 sealant shall be applied as the sealing/flashing material. CP-76 shall be trowelled at 1/8" thickness a minimum of 1" in both directions back onto and over the complete joint interface of the VI-CRYL CP-10/11 coating and the adjoining surface. CHIL-GLAS #10 glass fiber reinforcing mesh is recommended to provide thickness control and strength at the join interface.

NOTES TO SPECIFYING ENGINEER

1. Synthetic fabrics may be substituted for #10 open weave glass cloth without affecting the application.

2. If Chicken Wire, Hardware Cloth, or other metal reinforcements are to be used in lieu of fabric membranes, contact your representative for suggested procedures.

3. The above specification is for weather proofing and protection of insulation in HOT SERVICE: or for COLD or DUAL TEMPERATURE SERVICE where the insulation and/or the insulation system forms an adequate vapor barrier prior to the application of the VI-CRYL CP-10/11 coating.

Application Guide and Suggested Procedures

1. USE OF MATERIAL

VI-CRYL CP-10/11 weather barrier coating looks much heavier than it is . It is thixotropic. DO NOT THIN. Keep from freezing. Keep stored over long periods of time in a heated area. For spray application VI-CRYL CP-10/11 coating must be kept at minimum 50ºF (10ºC) just prior to spraying to achieve optimum results.

2. THE CONDITION OF THE INSULATION TO BE COATED

VI-CRYL CP-10/11 is a "breathing coating", which means that it will allow reasonable amounts of water (in the form of vapor - a gas) to pass through it in a reasonable period of time. However, excessively wet insulation on equipment operating at elevated temperatures will cause excessive water vapor pressure, and therefore blistering of the finish. Make certain the insulation is dry prior to the application of any coating.
To obtain proper bonding, dusty surfaces shall first be primed with Chil-Lag CP-52 diluted 50% with water.
When applying VI-CRYL CP-10/11 coating over hygroscopic alkaline cements, first prime the surface of the cement with Chil-Lag CP-52 diluted 50% with water and allow to dry completely before applying the finish coat.
The presence of moisture in systems operating in Cold Service can completely destroy the effectiveness of not only the finish, but the entire insulation system. The MUST BE DRY.
All exterior horizontal surfaces must be sloped at least 1/2 inch per foot (4cm/m) to prevent ponding water.

3. HAND APPLICATION

Large flat areas are best covered by application with trowel or stiff brush. Smaller, irregular surfaces such as fitting are more readily covered by brushing. Airless spray may also be used.

4. SPRAY APPLICATION

VI-CRYL CP-11 coating may be sprayed with many types of equipment, including airless spray. It may also be sprayed with conventional Mastic spray equipment using an external atomizing spray gun. Many manufacturers of spray equipment can make detailed recommendations for any number of types of equipment. The spray equipment and techniques would be similar to those used for applying block sealers or heavy Latex Paints. For best results, we suggest the following airless spray equipment.

PUMP	Graco Bulldog Hydramastic, 40:1 ratio (model 204-925) air regulator with inductor plate (207-039).
COMPRESSOR	Capable of 75 CFM and maintaining 100 PSIG.
FLUID HOSE	High pressure capable of 4,000 PSI One inch up to 150 feet. 3/4 inch after the first 150 feet. Use 8' (2.4 m) 1/2" I.D. hose for coupling to the gun.
GUN	Graco Hydra-Mastic #207-300 with Reverse-A-Clean 205-614.
TIP SIZES	635 to 655.

5. DRYING AND RECOATING

A finish coat of VI-CRYL CP-10/11 weather barrier coating should be applied immediately after the tack coat and membrane application for maximum bond.

CUSTOMER SERVICE—800-231-9541 OR 800-338-2975

IMPORTANT: Specialty Construction Brands, Inc. warrants that each of its products will be manufactured in accordance with the specifications in effect on the date of manufacture. WE MAKE NO OTHER WARRANTIES AND EXPRESSLY DISCLAIM ANY WARRANTIES OF MERCHANTIBILITY OR FITNESS FOR A PARTICULAR PURPOSE. If a product fails to meet this limited warranty, purchaser's sole and exclusive remedy is replacement of the product or, at our option, refund of the purchase price. OUR ACCEPTANCE OF ANY ORDERS FOR THE PRODUCT IS EXPRESSLY CONDITIONAL UPON PURCHASER'S ASSENT TO THE TERMS ON THE APPLICABLE INVOICE.

ADEQUATE TESTS: The information contained herein we believe is correct to the best of our knowledge and tests. The recommendations and suggestions herein are made without guarantee or representation as to results. We recommend that adequate tests be performed by you to determine if this product meets all of your requirements. The warranted shelf life of our products is six months from date of shipment to the original purchaser.

For industrial use only. Keep out of reach of children.

Consult Material Safety Data Sheet and container label for further information.

MATERIAL SAFETY DATA SHEET

REVISION DATE: 11-24-2003 SUPERSEDES: 06-23-2003

SECTION 1: CHEMICAL PRODUCT AND COMPANY IDENTIFICATION

COMPANY INFORMATION
Specialty Construction Brands, Inc.
(formerly Foster Products Corporation
an H.B. Fuller Company Subsidiary)
315 South Hicks Road
Palatine, IL 60067
Phone: 847-358-9500

Medical Emergency Phone Number (24 Hours): 1-888-853-1758
Transport Emergency Phone Number (CHEMTREC): 1-800-424-9300

PRODUCT INFORMATION

PRODUCT IDENTIFIER:	801800PM
PRODUCT NUMBER:	CP0110
PRODUCT DESCRIPTION:	Coating

SECTION 2: COMPOSITION/INFORMATION ON INGREDIENTS

Unlisted ingredients are not 'hazardous' per the Occupational Safety and Health Administration Hazard Communication Standard (29 CFR 1910.1200) and/or are not found on the Canadian Workplace Hazardous Materials Information System ingredient disclosure list. See Section 8 for any additional exposure limit guidelines.

Chemical Name	CAS #	PERCENT	OSHA PEL
Crystalline silica	14808-60-7	10 - 30	TWA (Respirable dust) 0.1 MG/M3
Aluminum hydroxide	21645-51-2	10 - 30	TWA (as Al) Soluble 2 MG/M3
Titanium dioxide	13463-67-7	1 - 5	TWA (Total dust) 10 MG/M3
Cellulose	9004-34-6	1 - 5	TWA (Respirable dust) 5 MG/M3 TWA (Total dust) 15 MG/M3
Vinyl acetate	108-05-4	0.1 - 1	TWA 10 ppm STEL 20 ppm

SECTION 3: HAZARDS IDENTIFICATION

EMERGENCY OVERVIEW

Cancer hazard.

MATERIAL SAFETY DATA SHEET

HMIS RATING: HEALTH -- 0 FLAMMABILITY -- 0 REACTIVITY -- 0
See SECTION 8: EXPOSURE CONTROLS/PERSONAL PROTECTION for personal protective equipment recommendations.

POTENTIAL HEALTH EFFECTS BY ROUTE OF ENTRY
EYE: Can cause minor irritation, tearing and reddening.

SKIN: Can cause minor skin irritation, defatting, and dermatitis.

INHALATION: Can cause minor respiratory irritation. Inhalation of dusts produced during cutting, grinding or sanding of this product may cause irritation of the respiratory tract.
Overexposure to crystalline silica may cause silicosis.

INGESTION: Ingestion is not an anticipated route of exposure. No hazard in normal industrial use.

LONG-TERM (CHRONIC) HEALTH EFFECTS
TARGET ORGAN(S): Lungs

REGULATED CARCINOGEN STATUS:
Unless noted below, this product does not contain regulated levels of NTP, IARC, ACGIH, or OSHA listed carcinogens.

Crystalline silica

Vinyl acetate

EXISTING HEALTH CONDITIONS AFFECTED BY EXPOSURE: Lung disease

SECTION 4: FIRST AID MEASURES

IF IN EYES: Use an eye wash to remove a chemical from your eye regardless of the level of hazard. Flush the affected eye for at least twenty minutes. Tilt the head to prevent chemical from transferring to the uncontaminated eye. Seek medical advice after flushing.

IF ON SKIN: Wash with soap and water. Get medical attention if irritation develops or persists.

IF VAPORS INHALED: Remove to fresh air. Call a physician if symptoms persist.

IF SWALLOWED: Do not induce vomiting. Seek medical attention if symptoms develop. Provide medical care provider with this MSDS. Induced vomiting may lead to aspiration of the material into the lungs potentially causing chemical pneumonitis that may be fatal.

SECTION 5: FIRE FIGHTING MEASURES

FLASH POINT:	Non flammable
AUTOIGNITION TEMPERATURE:	Not established
LOWER EXPLOSIVE LIMIT (% in air):	Not established
UPPER EXPLOSIVE LIMIT (% in air):	Not established
EXTINGUISHING MEDIA:	Use water spray, foam, dry chemical or carbon dioxide.
UNUSUAL FIRE AND EXPLOSION HAZARDS:	There is a possibility of pressure buildup in closed containers when heated. Water spray may be used to cool the containers.
SPECIAL FIRE FIGHTING INSTRUCTIONS:	Persons exposed to products of combustion should wear self-contained breathing apparatus and full protective equipment.
HAZARDOUS COMBUSTION PRODUCTS:	Carbon dioxide, Carbon monoxide

MATERIAL SAFETY DATA SHEET

SECTION 6: ACCIDENTAL RELEASE MEASURES

SPECIAL PROTECTION:	No adverse health effects expected from the clean-up of spilled material. Follow personal protective equipment recommendations found in Section 8 of this MSDS.
CLEAN-UP:	Dike if necessary, contain spill with inert absorbent and transfer to containers for disposal. Keep spilled product out of sewers, watersheds, or water systems. Avoid creating dusts. Cover material with absorbent and moisten and collect for disposal.

Transport Emergency Phone Number (CHEMTREC): 1-800-424-9300

SECTION 7: HANDLING AND STORAGE

Handling: No special handling instructions due to toxicity. Avoid breathing material.

Storage: Store in a cool, dry place.

Consult the Technical Data Sheet for specific storage instructions.

SECTION 8: EXPOSURE CONTROLS/PERSONAL PROTECTION

EYE PROTECTION:	Wear safety glasses when handling this product.
SKIN PROTECTION:	Avoid skin contact by wearing chemically resistant gloves.
GLOVES:	Not normally required. Use nitrile gloves if conditions warrant.
RESPIRATORY PROTECTION:	Respiratory protection may be required to avoid overexposure when handling this product. Use a respirator if general room ventilation is not available or sufficient to eliminate symptoms. NIOSH approved air purifying respirator with dust/mist filter. Respirators should be selected by and used following requirements found in OSHA's respirator standard (29 CFR 1910.134).
VENTILATION:	Use local exhaust ventilation or other engineering controls to minimize exposures.

EXPOSURE LIMITS:

Chemical Name	ACGIH EXPOSURE LIMITS	AIHA WEEL
Crystalline silica	TWA (Respirable dust) 0.05 MG/M3	Not established
Aluminum hydroxide	TWA (as Al) Soluble 2 MG/M3	Not established
Titanium dioxide	TWA (Total dust) 10 MG/M3	Not established
Cellulose	TWA (Total dust) 10 MG/M3	Not established
Vinyl acetate	TWA 10 ppm STEL 15 ppm	Not established

MATERIAL SAFETY DATA SHEET

SECTION 9: PHYSICAL AND CHEMICAL PROPERTIES

PHYSICAL STATE:	Liquid
COLOR:	White
ODOR:	Sweet
ODOR THRESHOLD:	Not established
WEIGHT PER GALLON (lbs.):	11.1
SPECIFIC GRAVITY:	1.33
SOLIDS (% by weight):	66.0
pH:	Not established
BOILING POINT (deg. C):	Not established
FREEZING/MELTING POINT (deg. C):	Not established
VAPOR PRESSURE (mm Hg):	Not established
VAPOR DENSITY:	Not established
EVAPORATION RATE:	Not established
OCTANOL/WATER COEFFICIENT:	Not established

SECTION 10: STABILITY AND REACTIVITY

STABILITY:	Stable under normal conditions.
CHEMICAL INCOMPATIBILITY:	Not established
HAZARDOUS POLYMERIZATION:	Will not occur.
HAZARDOUS DECOMPOSITION PRODUCTS:	Carbon monoxide, carbon dioxide

SECTION 11: TOXICOLOGICAL INFORMATION

CHEMICAL NAME	LD50/LC50
Crystalline silica	Not established
Aluminum hydroxide	Not established
Titanium dioxide	Not established
Cellulose	Oral LD50 Rat > 5 g/kg Inhalation LC50 Rat > 5800 mg/cu m/4H Dermal LD50 Rabbit > 2 g/kg
Vinyl acetate	Oral LD50 Rat = 2920 mg/kg Inhalation LC50 Rat =11400 ml/cu m Dermal LD50 Rabbit = 2335 mg/kg

TOXICOLOGY SUMMARY: No additional health information available.

SECTION 12: ECOLOGICAL INFORMATION

OVERVIEW: No ecological information available

MATERIAL SAFETY DATA SHEET

SECTION 13: DISPOSAL CONSIDERATIONS

To the best of our knowledge, this product does not meet the definition of hazardous waste under the U.S. EPA Hazardous Waste Regulations 40 CFR 261. Solidify and dispose of in an approved landfill. Consult state, local or provincial authorities for more restrictive requirements.

SECTION 14: TRANSPORTATION INFORMATION

Consult Bill of Lading for transportation information.
DOT: NOT REGULATED
IATA: NOT REGULATED

SECTION 15: REGULATORY INFORMATION

INVENTORY STATUS

U.S. EPA TSCA: This product is in compliance with the Toxic Substances Control Act's Inventory requirements.

CANADIAN CEPA DSL: This product is in compliance with the Canadian Domestic Substance List requirements.

If you need more information about the inventory status of this product call 651-236-5858.

TSCA Section 12(b) - Export Notice Requirements
This product contains a chemical substance that is currently on the EPA's Section 12(b) Export List. Contact the company Global Regulatory Group at 651/236-5858 for the identity of the Section 12(b) chemical(s).

FEDERAL REPORTING
EPA SARA Title III Section 313
Unless listed below, this product does not contain toxic chemical(s) subject to the reporting requirements of section 313 of Title III of the Superfund Amendments and Reauthorization Act of 1986 (SARA) and 40 CFR part 72. EPA has advised that when a percentage range is listed the midpoint may be used to fulfill reporting obligations.

Chemical Name	CAS#	%
Vinyl acetate	108-05-4	0.1 - 1

WHMIS STATUS: Unless listed below, this product is not controlled under the Canadian Workplace Hazardous Materials Information System.

D2A D2B

STATE REPORTING
This MSDS is not prepared for distribution in California.

SECTION 16: ADDITIONAL INFORMATION

This Material Safety Data Sheet is prepared to comply with the United States Occupational Safety and Health Administration (OSHA) Hazard Communication Standard (29 CFR 1910.1200) and the Canadian Workplace Hazardous Materials Information System (WHMIS).

Prepared by: The Global Regulatory Department
Phone: 651-236-5842

MATERIAL SAFETY DATA SHEET

The information and recommendations set forth herein are believed to be accurate. Because some of the information is derived from information provided to Specialty Construction Brands, Inc. from its suppliers, and because Specialty Construction Brands, Inc. has no control over the conditions of handling and use, Specialty Construction Brands, Inc. makes no warranty, expressed or implied, regarding the accuracy of the data or the results to be obtained from the use thereof. The information is supplied solely for your information and consideration, and Specialty Construction Brands, Inc. assumes no responsibility for use or reliance thereon. It is the responsibility of the user of Specialty Construction Brands, Inc. products to comply with all applicable federal, state and local laws and regulations.

DigiTrace

AMC-1H

Ambient-Sensing Thermostat for Hazardous Locations

Installation Instructions

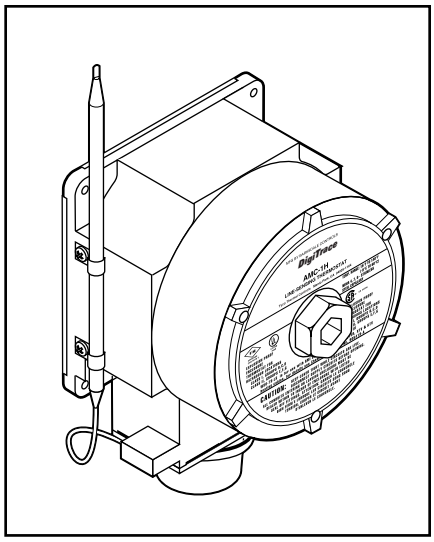

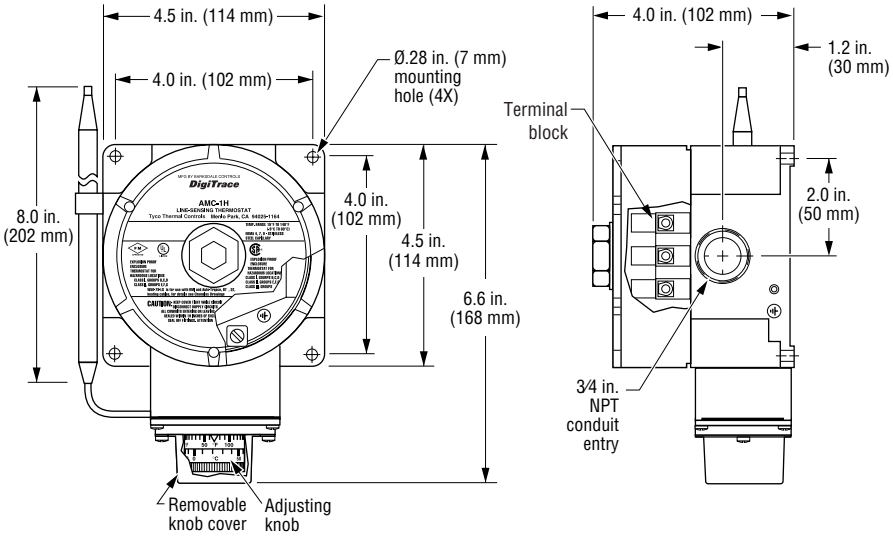

Description

The AMC-1H thermostat is designed for controlling freeze-protection heat-tracing circuits in hazardous locations. The thermostat responds to ambient temperature changes. The AMC-1H can be used to control a heat-tracing circuit directly (see Figure 1 on back page) or it can be used to control a contactor coil (see Figure 2).

Specifications

Enclosure	NEMA 4, 7, 9, lacquer-coated cast-aluminum housing, stainless-steel hardware
Entries	One 3/4" NPT conduit hub
Setpoint range	15°F to 140°F (–9°C to 60°C)
Sensor exposure limits	–40°F to 160°F (–40°C to 71°C)
Housing exposure limits	–40°F to 140°F (–40°C to 60°C)
Switch	SPDT
Electrical rating	22 A at 125/250/480 Vac
Accuracy	±6°F (±3.3°C)
Deadband	2°F to 12°F (1.1°C to 6.7°C) above actuation temperature
Setpoint repeatability	±3°F (±1.7°C)
Sensor type	Fluid-filled (silicone) bulb and 9 ft (2.7 m) capillary
Sensor material	300 series stainless steel
Connection terminals	Screw terminals, 10–14 AWG (2–5 mm^2)

Approvals

Hazardous locations

UL LISTED — FM APPROVED — CSA

Class I, Div. 1 and 2, Groups B, C, D
Class II, Div. 1 and 2, Groups E, F, G
Class III

⚠ WARNING:

This component is an electrical device. It must be installed correctly to ensure proper operation and to prevent shock or fire. Read these important warnings and carefully follow all the installation instructions.
Component approvals and performance are based on the use of specified parts only. Do not use substitute parts or vinyl electrical tape to make connections.

Installing the Thermostat

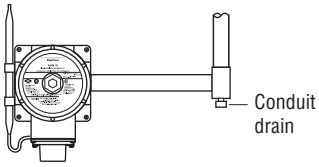

1. Verify that the thermostat is suitable for the area where it is to be installed.
2. Check the line voltage and the heat-tracing load to ensure that the thermostat ratings are not exceeded.
3. Mount the unit in a position that prevents condensation from draining into the enclosure from the connecting conduit (see diagram at left).

Positioning

4. Mount ambient-sensing units in the area exposed to the coldest temperature and the most wind. **Do not mount on the side of a warm building or in a location that is exposed to warm air currents or direct sunlight.**

Setting and Adjusting

5. Set the thermostat dial to the desired temperature and finish wiring.

Wiring

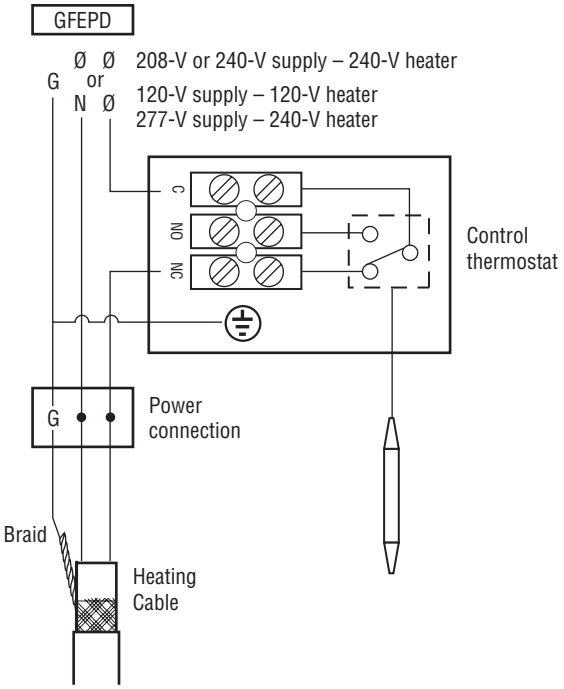

Figure 1. Heat-tracing control

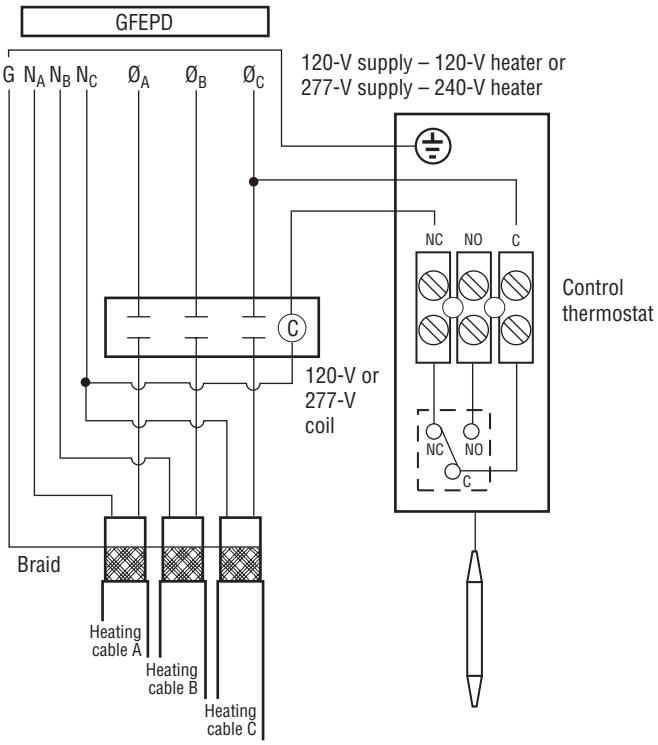

Figure 2. Controlling a contactor

For switching heat-tracing loads greater than 22 A or switching multiple heat-tracing circuits.

Worldwide Headquarters
Tyco Thermal Controls
300 Constitution Drive
Menlo Park, CA 94025-1164
USA
Tel (800) 545-6258
Fax (650) 474-7517
Fax-on-Demand (800) 329-4494
info@tycothermal.com
www.tycothermal.com

Important: *All information, including illustrations, is believed to be reliable. Users, however, should independently evaluate the suitability of each product for their particular application. Tyco Thermal Controls makes no warranties as to the accuracy or completeness of the information, and disclaims any liability regarding its use. Tyco Thermal Controls' only obligations are those in the Tyco Thermal Controls Standard Terms and Conditions of Sale for this product, and in no case will Tyco Thermal Controls or its distributors be liable for any incidental, indirect, or consequential damages arising from the sale, resale, use, or misuse of the product. Specifications are subject to change without notice. In addition, Tyco Thermal Controls reserves the right to make changes—without notification to Buyer—to processing or materials that do not affect compliance with any applicable specification.*

© 1995, 2001 Tyco Thermal Controls LLC Printed in USA PN 174517 H56911 10/01

Warranty, Service & Repair

To register your product with the manufacturer, fill out the enclosed warranty card and return it immediately to:

Flowline Inc.
10500 Humbolt Street
Los Alamitos, CA 90720.

If for some reason your product must be returned for factory service, contact Flowline Inc. to receive a Material Return Authorization number (MRA) first, providing the following information:

1. Part Number, Serial Number
2. Name and telephone number of someone who can answer technical questions related to the product and its application.
3. Return Shipping Address
4. Brief Description of the Symptom
5. Brief Description of the Application

Once you have received a Material Return Authorization number, ship the product prepaid in its original packing to:

Flowline Factory Service
MRA _____
10500 Humbolt Street
Los Alamitos, CA 90720

To avoid delays in processing your repair, write the MRA on the shipping label. Please include the information about the malfunction with your product. This information enables our service technicians to process your repair order as quickly as possible.

FLOWLINE®

Switch-Tek™ Powered Level Switches LZ12, LU10, LP15, LP10, and LO10 Series Owner's Manual

NRTL/C

Version 1.5A
© 2005 FLOWLINE Inc.
All rights reserved.
Manual # LO900002 - 0508-PS1M1_5A

WARRANTY

Flowline warrants to the original purchaser of its products that such products will be free from defects in material and workmanship under normal use and service for a period which is equal to the shorter of one year from the date of purchase of such products or two years from the date of manufacture of such products.

This warranty covers only those components of the products which are non-moving and not subject to normal wear. Moreover, products which are modified or altered, and electrical cables which are cut to length during installation are not covered by this warranty.

Flowline's obligation under this warranty is solely and exclusively limited to the repair or replacement, at Flowline's option, of the products (or components thereof) which Flowline's examination proves to its satisfaction to be defective. FLOWLINE SHALL HAVE NO OBLIGATION FOR CONSEQUENTIAL DAMAGES TO PERSONAL OR REAL PROPERTY, OR FOR INJURY TO ANY PERSON.

This warranty does not apply to products which have been subject to electrical or chemical damage due to improper use, accident, negligence, abuse or misuse. Abuse shall be assumed when indicated by electrical damage to relays, reed switches or other components. The warranty does not apply to products which are damaged during shipment back to Flowline's factory or designated service center or are returned without the original casing on the products. Moreover, this warranty becomes immediately null and void if anyone other than service personnel authorized by Flowline attempts to repair the defective products.

Products which are thought to be defective must be shipped prepaid and insured to Flowline's factory or a designated service center (the identity and address of which will be provided upon request) within 30 days of the discovery of the defect. Such defective products must be accompanied by proof of the date of purchase.

Flowline further reserves the right to unilaterally wave this warranty and to dispose of any product returned to Flowline where:

a. There is evidence of a potentially hazardous material present with product.
b. The product has remained unclaimed at Flowline for longer than 30 days after dutifully requesting disposition of the product.

THERE ARE NO WARRANTIES WHICH EXTEND BEYOND THE DESCRIPTION ON THE FACE OF THIS WARRANTY. This warranty and the obligations and liabilities of Flowline under it are exclusive and instead of, and the original purchaser hereby waives, all other remedies, warranties, guarantees or liabilities, express or implied. EXCLUDED FROM THIS WARRANTY IS THE IMPLIED WARRANTY OF FITNESS OF THE PRODUCTS FOR A PARTICULAR PURPOSE OR USE AND THE IMPLIED WARRANTY OF MERCHANT ABILITY OF THE PRODUCTS.

This warranty may not be extended, altered or varied except by a written instrument signed by a duly-authorized officer of Flowline, Inc.

SPECIFICATIONS

Step One

Common Specifications:

Orientation:	*Universal*
Accuracy:	*± 1 mm in water*
Repeatability:	*± 0.5 mm in water*
Supply voltage:	*12-36 VDC* *12-30 VDC (LZ12 Only)*
Consumption:	*25 mA maximum*
Contact type:	*(1) SPST relay*
Contact rating:	*60VA*
Contact output:	*Selectable NO/NC*
Process temp.:	*F: -40˚ to 176˚* *C: -40˚ to 80˚*
Pressure:	*150 psi (10 bar) @ 25˚ C., derated @ 1.667 psi (.113 bar) per ˚C. above 25˚ C.*
Sensor rating:	*NEMA 6 (IP68)*
Cable type:	*4-conductor, #22 AWG (shielded)*
Cable length:	*Standard: 10' (3m)* *Special order: 25' (7.6m) or 50' (15.2m)*
Process mount:	*3/4" NPT (3/4" G / Rp)*
Mount. gasket:	*Viton® (G version only)*
Classification:	*General purpose*
CE compliance:	*EN 61326 EMC* *EN 61010-1 safety*

LP15 Specifications:

Dielectric range:	*> 20 constants*
Conductive range:	*> 100 micromhos*
Sensor material:	*PP*
Cable jacket mat.:	*PP*

LO10 Specifications:

Sensor material:	*1__5: PP* *2__5: PFA*
Cable jacket mat.:	*1__5: PP* *2__5: PFA*

LZ12 Specifications:

Maint. alarm:	*NPN transistor* *10 mA max.*
Sensor material:	*Ryton® (glass fill)* *Viton® cable grommet*
Process teamp.:	*F: -40˚ to 176˚* *C: -40˚ to 80˚*
Cable jacket mat.:	*PP*
Cable type:	*5-conductor, #24 AWG (shielded)*

LU10 Specifications:

Sensor material:	*1__5: PP* *2__5: PFA*
Cable jacket mat.:	*1__5: PP* *2__5: PFA*
Classification:	*Intrinsically safe*
Approvals:	*CSA: Class I, Groups A, B, C & D; Class II, Groups E, F and G; Class III* *EEx: Class 1, Division 1, Groups A, B, C, D; EEx ib IIC T6*
Parameters:	*CSA: Vmax = 32V, Imax = 300 mA, Pmax = 1.3 W* *Ci = 0 µF, Li = 0 µH* *EEx: Ui = 32V; Ii = 300 mA; Pi = 1.3 W;* *Ci = 0 µF; Li = 0 µH*
Certificates:	*CSA: LR 79326* *EEx: LCIE 01.E6048 X*

LP10 Specifications:

Dielectric range:	*> 20 constants*
Conductive range:	*> 100 micromhos*
Sensor material:	*1__5: PP* *2__5: PFA*
Cable jacket mat.:	*1__5: PP* *2__5: PFA*

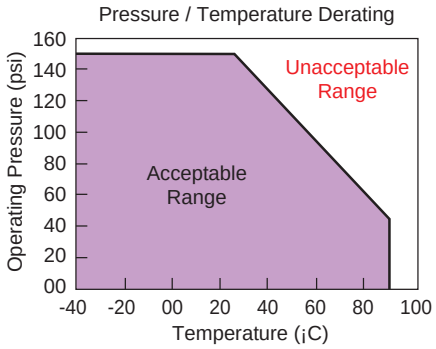

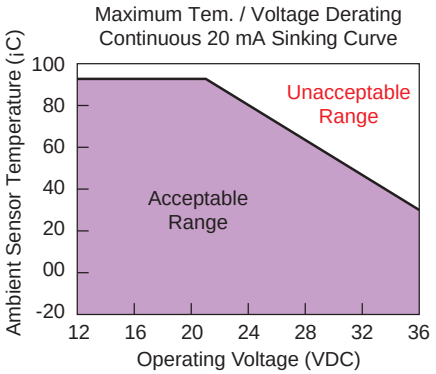

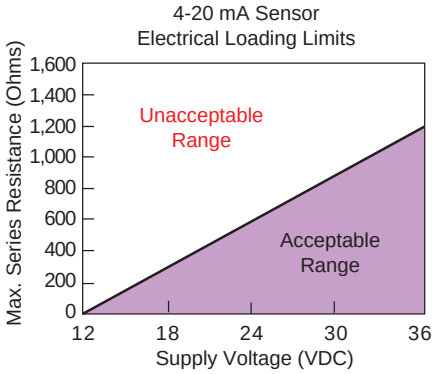

Table of Common Dielectric Constants

NOTE: Liquids with a dielectric constant less than 20 will not be detected by an LP15 or LP10 series level switch, as factory calibrated.

Acetone	21
Acetoaldehyde	22.2
Acetyl methyl hexyl ketone	28
Alcohol	16 to 31
Ammonia	15 to 25
Acetic acid	4.1 to 6.2
Butyl chloride	9.6
Barium chloride	9 to 11
Benzene	2.3
Benzine	2.3
Barium nitrate	5.6
Bromine	3.1
Chlorobenzene	4.7 to 6
Chlorotoluene	4.7
Chloroform	4.5 to 5.0
Chlorine, liquid	2.0
Carbon tetrachloride	2.2
Cyan	2.6
Cyclohexane methanol	3.7
D.I. Water	20
Ethyl toluene	2.2
Ethyl alcohol	23
Ethylene glycol	37
Ethylene oxide	14
Ethylene dichloride	11 to 17
Ethylene chloride	10.5
Ethyl acetate	6.4
Ethyl salicylate	8.6
Ethyl stearate	2.9
Ethyl silicote	4.1
Formic acid	59
Ferric oleate	2.6
Freon	2.2
Glycerine	47
Glycol	30
Glycol nitrite	27
Gasoline	2 to 2.2
Hydrochloric acid	4.6
Isobutyric acid	2.7
Isobutyl methyl ketone	13
Jet fuel	1.7
Lead carbonate	18
Lead nitrate	38
Methyl salicylate	9.0
Methanol	33
Methyl alcohol	33 to 38
Margarine, liquid	2.8 to 3.2
Methyl acetate	7.3
N-butyl formate	2.4
Nitrobenzene	26 to 35
Nitrotoluene	25
Naphthalene	2.3 to 2.5
Oils, vegetable	2.5 to 3.5
Oils, mineral	2.3 to 2.4
Oils, petroleum	1.8 to 2.2
Oleic acid	2.5
Propane, liquid	1.8 to 1.9
Potassium nitrate	5.0 to 5.9
Potassium chloride	5.0
Stearic acid	2.3
Toluene	2.4
Trichloroethylene	3.4
Trichloroacetic acid	4.5
Terephthalic acid	1.5 to 1.7
Thinner	3.7
Urea	3.5
Vinyl chloride	2.8 to 6
Vinyl alcohol	1.8 to 2.0
Water, 20°C	80
Water, 100°C	48

DIMENSIONS

Step Two

Switch-Tek™ Vibration Level Switch, LZ12 Series

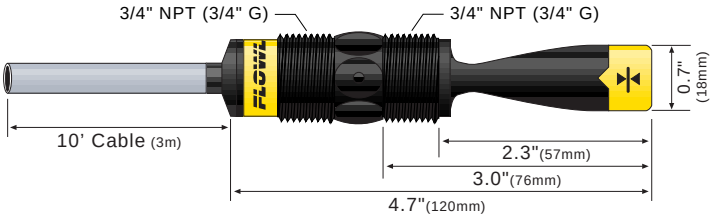

Switch-Tek™ Ultrasonic Level Switch, LU10 Series

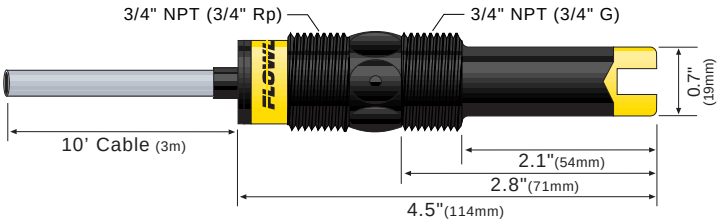

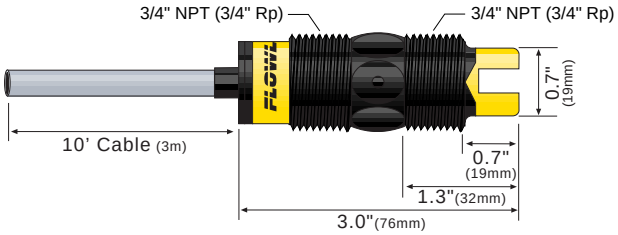

Switch-Tek™ SuperGuard RF Capacitance Level Switch, LP15 Series

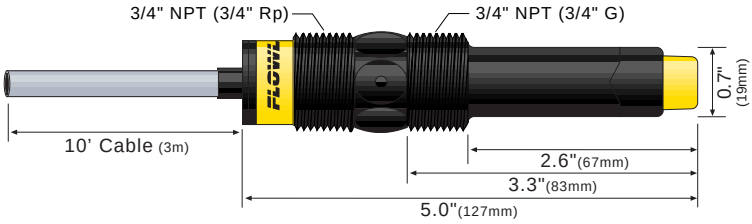

Switch-Tek™ Intrusive RF Capacitance Level Switch, LP10 Series

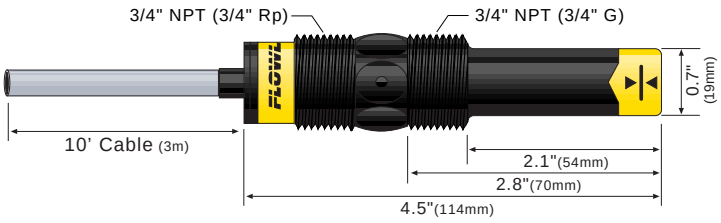

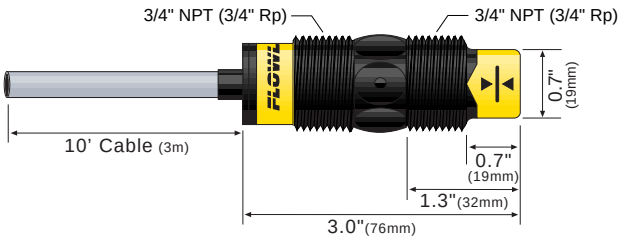

Switch-Tek™ Optic Leak Detection Switch, LO10 Series

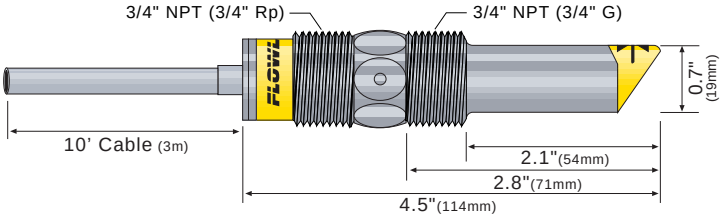

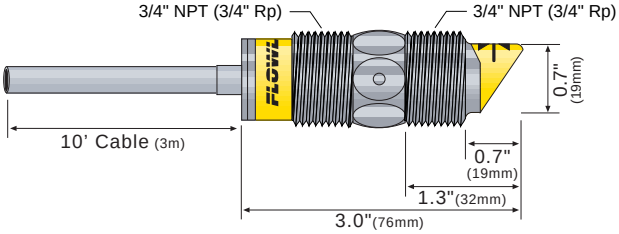

** all dimensions are Nominal*

SAFETY PRECAUTIONS

Step Three

⚠ About this Manual:

PLEASE READ THE ENTIRE MANUAL PRIOR TO INSTALLING OR USING THIS PRODUCT. This manual includes information on all models of Flowline Switch-Tek™ Powered Level Switches: LZ12, LU10, LP15, LP10 and LO10 series. Please refer to the part number located on the switch label to verify the exact model which you have purchased.

⚠ User's Responsibility for Safety:

Flowline manufactures a wide range of liquid level sensors and technologies. While each of these sensors is designed to operate in a wide variety of applications, it is the user's responsibility to select a sensor model that is appropriate for the application, install it properly, perform tests of the installed system, and maintain all components. The failure to do so could result in property damage or serious injury.

⚠ Proper Installation and Handling:

Because this is an electrically operated device, only properly-trained staff should install and/or repair this product. Use a proper sealant with all installations. *Note: Always install the 3/4" Viton gasket with all versions of Switch-Tek™ with metric threads. The G threaded version will not seal unless the gasket is properly installed.* Never overtighten the sensor within the fitting, beyond a maximum of 80 inch-pounds torque. Always check for leaks prior to system start-up.

⚠ Material Compatibility:

The LU10, LP10 and LO10 series sensors are available in two different wetted materials. Models L_10-1__5 are made of Polypropylene(PP). Models L_10-2__5 are made of Perfluoroalkoxy(PFA). The LZ12 series is made of made of Ryton® (40% glass filled) and the LP15 series is made of PP. Make sure that the model you have selected is compatible with the application liquid. To determine the chemical compatibility between the sensor and its application liquids, refer to an industry reference such as the Compass Corrosion Guide (available from Compass Publications, phone 858-589-9636).

⚠ Wiring and Electrical:

The supply voltage used to power the sensor should never exceed a maximum of 36 volts DC *(30 VDC for LZ12 series)*. Electrical wiring of the sensor should be performed in accordance with all applicable national, state, and local codes.

⚠ Flammable, Explosive and Hazardous Applications:

Only the LU10-___5 series switch is rated for use in hazardous locations. Refer to the Certificate of Compliance for all applicable intrinsically safe ratings and entity parameters. Refer to the National Electric Code (NEC) for all applicable installation requirements in hazardous locations. DO NOT USE THE LZ12, LP15, LP10 OR LO10 SERIES GENERAL PURPOSE SWITCH IN HAZARDOUS LOCATIONS.

⚠ WARNING ⚠

The rating for the relay is 60 VA.

Flowline's Switch-Tek™ level switches are not recommended for use with electrically charged application liquids. For most reliable operation, the liquid being measured may need to be electrically grounded.

Always install the 3/4" Viton gasket with all versions of the powered sensors with metric threads. The G threaded version will not seal unless the gasket is installed properly.

INTRODUCTION

Step Four

Vibration Switch:

The Tuning Fork vibration switch operates at a nominal frequency of 400 Hz. As the switch becomes immersed in a liquid or slurry, a corresponding frequency shift occurs. When the measured frequency shift reaches the set point value, the switch changes state indicating the presence of a liquid or slurry medium. For optimum performance and proactive maintenance, the sensor automatically adjusts for coating, and if necessary, outputs a preventative maintenance alarm.

⚠ ***Do not squeeze the forks together. Doing so could damage or break the sensor and void the warranty.***

When powering up the LZ12, the start-up procedure requires the switch to cycle through a wet condition for 1/2 second in order to determine an initial resonance.

Ultrasonic Switch:

The Ultrasonic level switch generates a 1.5 MHz ultrasonic wave from a miniature piezoelectric transducer located on one side of the gap in its sensing tip. Another piezo transducer located on the other side of the gap acts as a microphone, picking up the sound. When liquid enters the gap in the sensing tip, the audio level changes.

⚠ ***The sensor should be installed so that the liquid will drip out of the gap when the sensor becomes dry.***

Optic Switch:

The Optic Leak Detector use principles of optical refraction to detect the presence or absence of fluid. A pulsed infrared light beam is internally generated by a light emitting diode and aimed at the slanted optical tip of the sensor. If the tip is dry, the light beam bounces at a 90 degree angle to a receiving photo transistor, indicating a dry condition. If the tip is immersed in liquid, the light beam will refract out into the liquid instead of being reflected to the photo transistor, indicating a wet condition.

⚠ ***The Optic Leak Detector can not detect the presence or absence of specular application liquids that reflect light (such as milk), or viscous liquids (such as paint) that form a coating on the sensor tip.***

SuperGuard Capacitance Switch:

The SuperGuard level switch generates a pulse-wave radio frequency signal from the capacitance electrode located in the sensing tip of each sensor. When liquid comes into contact with the sensing tip, the capacitance as measured by the sensor changes based on the dielectric constant of the liquid. The guard circuit rejects the negative effects of coating buildup on the probe by eliminating the coating signal path between the active and reference electrodes.

Intrusive RF Capacitance Switch:

The Intrusive RF Capacitance level switch generates a 300 kHz pulse-wave radio frequency signal from the capacitance electrode located in the sensing tip of each sensor. When liquid comes into contact with the sensing tip, the capacitance as measured by the sensor changes based on the dielectric constant of the liquid.

⚠ ***The sensor's operation may vary based on the dielectric properties of various application liquids. The LP15 & LP10 series sensor is factory-calibrated to be used with liquids with a dielectric value between 20 and 80. Liquids with a dielectric constant less than 20 will not be detected by an LP15 & LP10 series sensor, as factory calibrated.***

INSTALLATION

Step Five

Through Wall Installation:

Flowline's Switch-Tek™ level switches may be installed through the top, side or bottom of a tank wall. The sensor has male 3/4" NPT threads on either side of a 15/16" wrench flat. This enables the user to select the sensor's mounting orientation, installed outside of the tank in, or inside of the tank out.

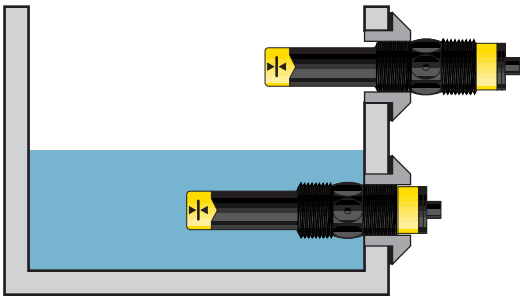

⚠ ***Always install the 3/4" Viton gasket with the metric (long sensor length) versions of the L___-__2_. The G threaded version of the Switch-Tek™ will not seal unless the gasket is installed properly.***

Smart Trak™ Installation:

Flowline's Smart Trak LM10 series mounting system is an in-tank fitting which enables users to install up to four FLOWLINE sensors of any technology, to any depth, along the entire length of track. Smart Trak may be installed through the top wall of any tank using a standard 2" NPT tank adapter. If no tank top installation is available, Flowline's side mount bracket, LM50-1001, enables Smart Trak to be installed directly to the side wall of a tank.

Switch Pak™ Installation:

Flowline's Switch Pak LM45 series mounting system is an in-tank fitting which enables users to install one FLOWLINE sensor, of any technology, to a specific depth. The Flowline sensor may be installed onto the 3/4" NPT adapter at the end of the Switch Pak. Switch Pak may be installed through the top wall of any tank using a standard 2" NPT tank adapter. Flowline's side mount bracket, model LM50-1001, may also be used if top wall installation is not available.

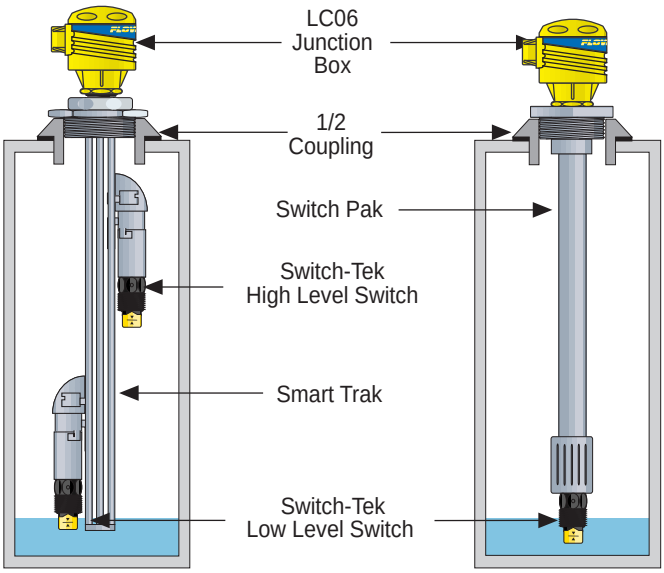

ELECTRICAL

Step Six

Supply Voltage:

The supply voltage to the Switch-Tek™ level switch should never exceed a maximum of 36 VDC. Flowline controllers have a built-in 13.5 VDC power supply which provides power to all of Flowline's electrically powered sensors. Alternative controllers and power supplies, with a minimum output of 12 VDC up to a maximum output of 36 VDC, may also be used with the Switch-Tek™ level switch.

Required Cable Length:

Determine the length of cable required between the Switch-Tek™ level switch and its point of termination. Allow enough slack to ensure the easy installation, removal and/or maintenance of the sensor. The cable length may be extended up to a maximum of 1000 feet, using a well-insulated, 14 to 20 gauge shielded four conductor cable.

Wire Stripping:

Using a 10 gauge wire stripper, carefully remove the outer layer of insulation from the last 1-1/4" of the sensor's cable. Unwrap and discard the exposed foil shield from around the signal wires, leaving the drain wire attached if desired. With a 20 gauge wire stripper, remove the last 1/4" of the colored insulation from the signal wires.

Signal Outputs (Current sensing):

The standard method used by Flowline controllers; this technology uses only two wires (Red and Black). The sensor draws 5 mA when it is dry, and 19 mA when wet. NC/NO status must be set by the controller. The White and Green wires are not used.

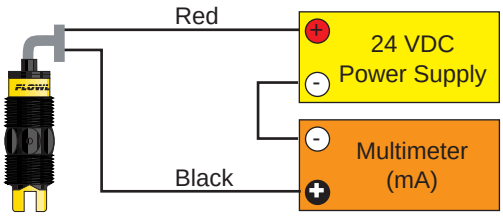

Signal Output (Relay switching):

Allows the sensor to switch a small load on or off directly, using an internal 1A relay (60 VAC/60 VDC). Only model LU10-___5 uses the relay and features 4 wires (red, black, white and green) and a shield wire. The NO/NC status is set by the polarity of the voltage feeding the red and black wires. The green wire is the common for the relay and the white wire is the NO or NC, depending on the polarity of red and black.

Normally Open Wiring:

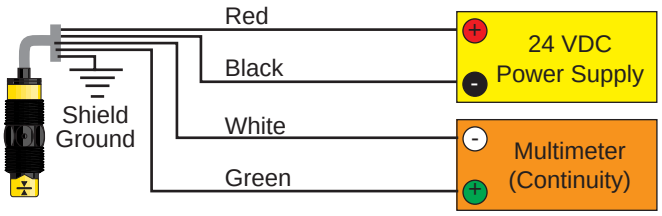

Normally Closed Wiring:

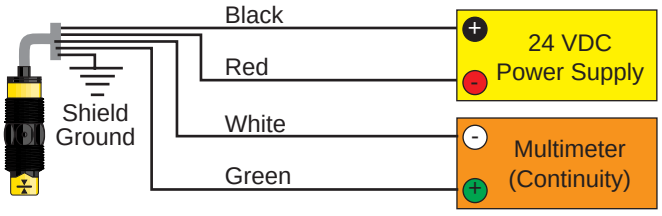

WIRING

Step Seven

Wiring to a Flowline Controller:

LC10 Series Controller
(4 or 20 mA signal output)

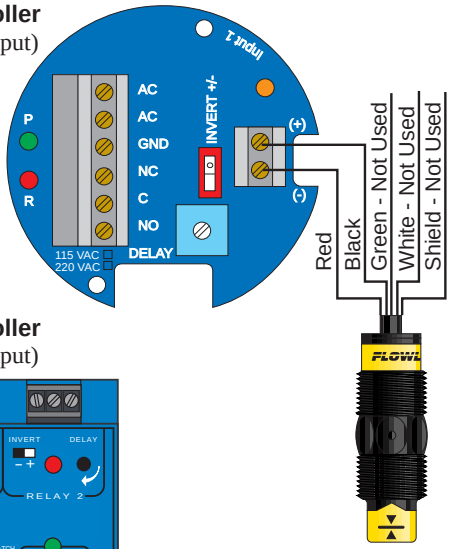

LC40 Series Controller
(4 or 20 mA signal output)

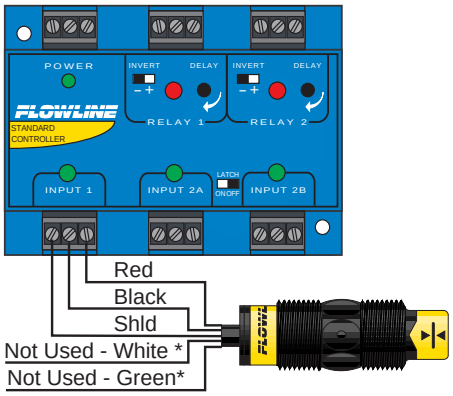

Maintenance Alarm (LZ12 Vibration only):

For optimum performance and proactive maintenance, the sensor automatically adjusts for coating, and if necessary, outputs a preventative maintenance alarm. The Yellow wire is a NPN transistor designed to switch when a build-up of material prevents the vibration switch from operating at its operational frequency. Use the Yellow wire to identify when the Vibration switch requires cleaning.

To wire the maintenance output wire to an LED, follow the wiring diagram below. The Yellow wire is connected to the LED and a 2.2kΩ resister in series and referenced back to the (+) of the power supply.

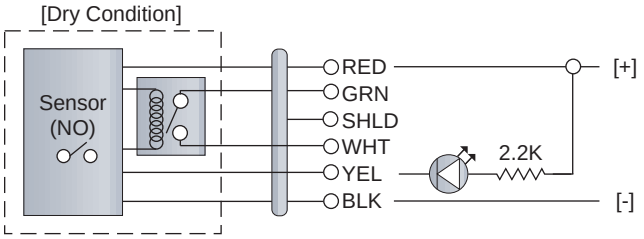

To wire the maintenance output wire to an PLC, follow the wiring diagram below. The Yellow wire is connected to the PLC input with a 10 kΩ resister parallel to the PLC input and the (+) of the power supply.

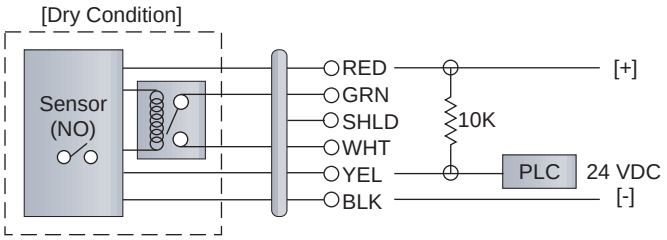

WIRING

Step Eight

Wiring the Relay Output:

The Switch-Tek™ relay output can be wired as a dry contact to a VDC or VAC power source. Switch-Tek™ does require 12 - 36 VDC power to operate the sensor and switch the relay. All illustrations below identify a Dry switch state as the normal position of the relay.

Switching a Normally Open DC Load:
The Red wire connects to Positive (+) of the power supply and the Black wire connects to Negative (-). The LOAD can be attached to either the Green or White wires. Complete the circuit by either connecting the Green to (+) VDC power or White to (-) VDC power (see illustration below).

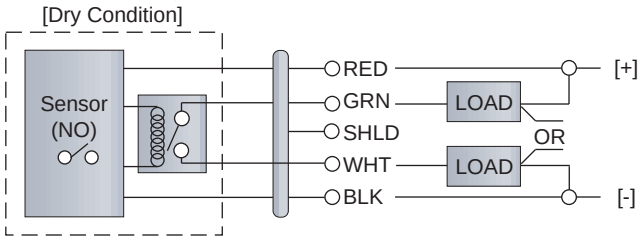

Switching a Normally Closed DC Load:
The Black wire connects to Positive (+) of the power supply and the Red wire connects to Negative (-). The LOAD can be attached to either the Green or White wires. Complete the circuit by either connecting the Green to (+) VDC power or White to (-) VDC power (see illustration below).

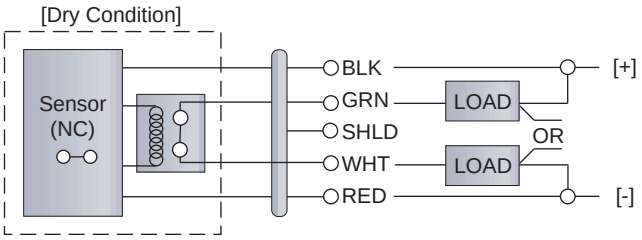

Switching a Normally Open AC Load:
The Red wire connects to Positive (+) of the DC power supply and the Black wire connects to Negative (-). The LOAD can be attached to the Green wire and the Hot of the VAC power. Connect the White to the Neutral of the VAC power (see illustration below).

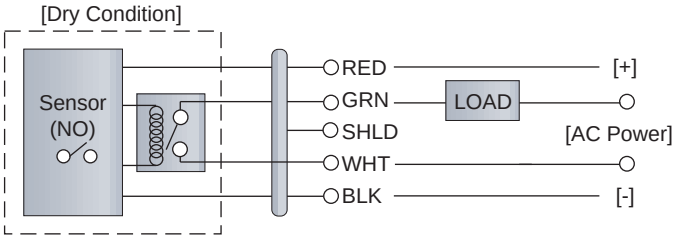

Switching a Normally Closed AC Load:
The Black wire connects to Positive (+) of the DC power supply and the Red wire connects to Negative (-). The LOAD can be attached to the Green wire and the Hot of the VAC power. Connect the White to the Neutral of the VAC power (see illustration below).

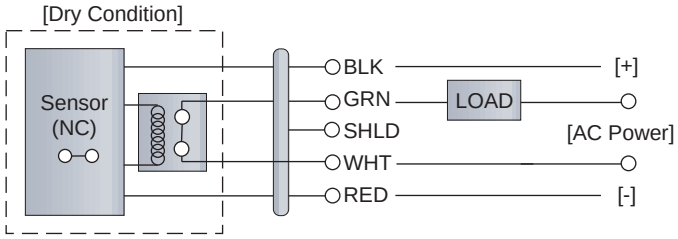

WIRING

Step Nine

Models LU10-___5 Only:

The LU10-___5 level switch has been approved for use in Class I, Groups A, B, C & D; UNDER CERTIFICATE NUMBER LR 79326-4. DO NOT USE THE LZ12, LP15, LP10 or LO10 SERIES IN INTRINSICALLY SAFE APPLICATIONS. The Entity parameter for the LU10-___5 are:

Vmax = 32 VDC
Imax = 0.5 A
Ci = 0 µF
Li = 0 mH

Intrinsically Safe Control Drawing:

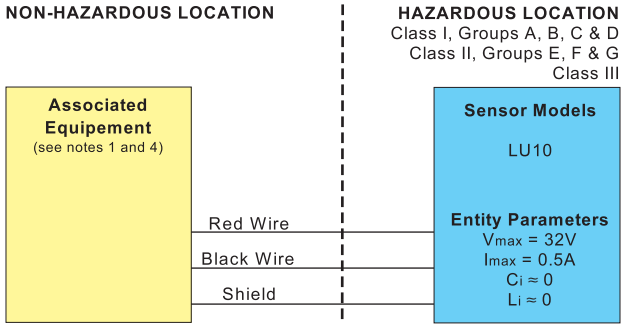

Notes:
1. CSA certified associated equipment with entity parameters.
2. $V_{max} \geq V_{oc}$, $I_{max} \geq I_{sc}$, $C_i + C_{cable} \leq C_a$., $L_i + L_{cable} \leq L_a$.
3. Installation should be in accordance with CEC Part I, or NFPA 70.
4. Associated equipment must be installed per manufacturers instructions

Sensor Drawing: LSD1
Rev. B 10-01-02

Wiring to a Flowline Controller:

LC90 Series Controller
4 or 20 mA Signal Output

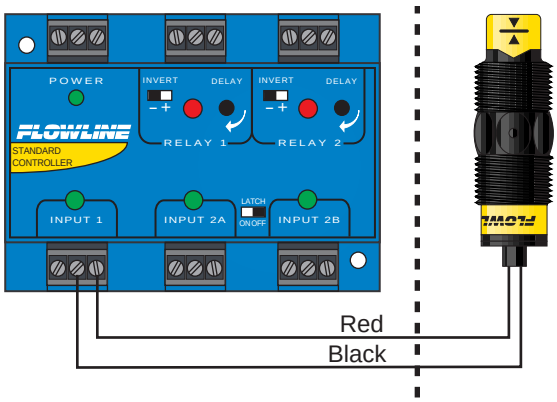

Voc	= 17.47 VDC	Vmax	= 32 VDC
Isc	= 0.4597 A	Imax	= 0.5 A
Ca	= 0.494 µF	Ci	= 0 µF
La	= 0.119 µH	Li	= 0 µH

WIRING

Step Ten

Models LU10-___5 Only:

The LU10-___5 level switch has been approved for use in Class I, Division 1, Groups A, B, C & D; EEx ib IIC T6; UNDER CERTIFICATE NUMBER LCIE 01.E6048X. DO NOT USE THE LZ12, LP15, LP10 or LO10 SERIES IN INTRINSICALLY SAFE APPLICATIONS. The Entity parameter for the LU10-___5 are:

North America	Europe
Vmax = 32 VDC	Ui = 32 VDC
Imax = 0.5 A	Ii = 0.5 A
Pmax = 1.3 W	Pi = 1.3 W
Ci = 0 µF	Ci = 0 µF
Li = 0 µH	Li = 0 µH

Intrinsically Safe Control Drawing:

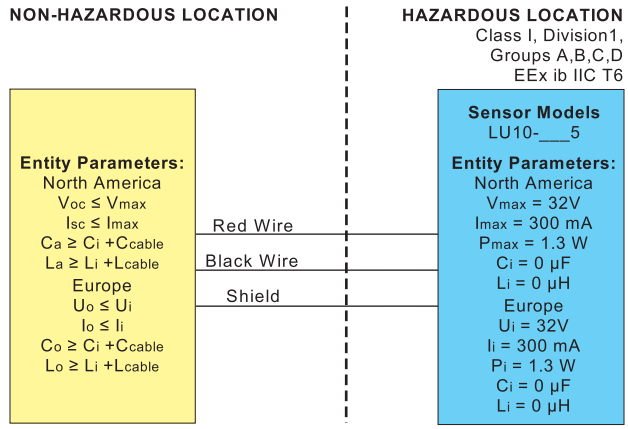

Sensor Drawing: U10900
Sheet 1 of 2
Rev. B 4-02-01

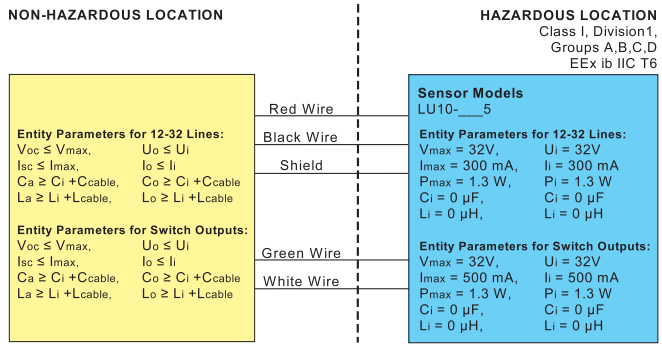

Notes: PARAMETERS DEPEND ON OUTPUT TYPE
1. Installation should be in accordance with CEC Part 1, or NFPA 70.
2. Associated Equipment shall be CSA certified with entity parameters connected in accordance with manufacturers instructions.

Sensor Drawing: U10900
Sheet 2 of 2
Rev. B 4-02-01

WIRING

Step Eleven

Wiring as a P-Channel or N-Channel output:

The Switch-Tek™ can be substituted for either a P-Channel (PNP, sourcing) output or a N-Channel (NPN, sinking) output.

Normally Open DC Load as a P-Channel Output:

To wire as a NO P-Channel output, follow the directions below. The Red wire connects to Positive (+) of the power supply and the Black wire connects to Negative (-). The Green wire is jumpered to the Red wire while the White wire is connected to the LOAD. Jumper the LOAD back to the Negative (-) to complete the circuit.

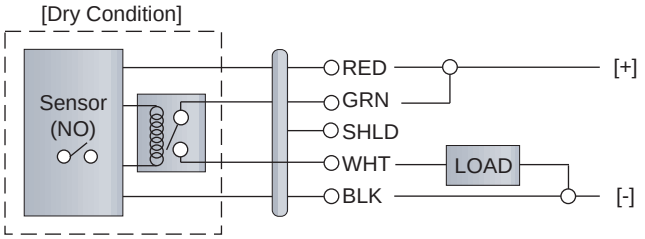

Normally Closed DC Load as a P-Channel Output:

To wire as a NC P-Channel output, follow the directions below. The Black wire connects to Positive (+) of the power supply and the Red wire connects to Negative (-). The Green wire is jumpered to the Black wire while the White wire is connected to the LOAD. Jumper the LOAD back to the Negative (-) to complete the circuit.

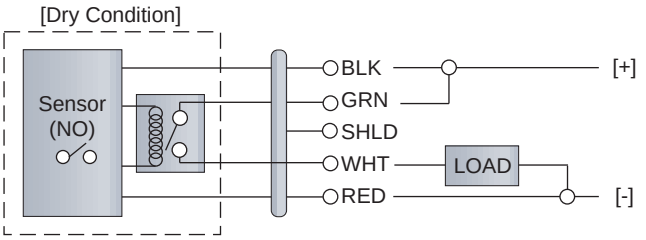

Normally Open DC Load as a N-Channel Output:

To wire as a NO N-Channel output, follow the directions below. The Red wire connects to Positive (+) of the power supply and the Black wire connects to Negative (-). The White wire is jumpered to the Black wire while the Green wire is connected to the LOAD. Jumper the LOAD back to the Positive (+) to complete the circuit.

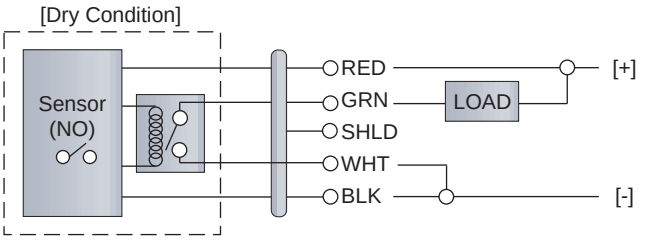

Normally Closed DC Load as a N-Channel Output:

To wire as a NC N-Channel output, follow the directions below. The Black wire connects to Positive (+) of the power supply and the Red wire connects to Negative (-). The White wire is jumpered to the Red wire while the White wire is connected to the LOAD. Jumper the LOAD back to the Positive (+) to complete the circuit.

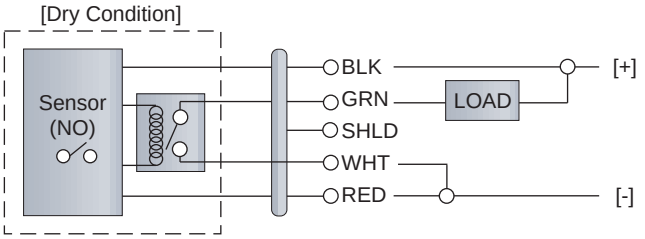

MAINTENANCE

Step Twelve

General:

The Switch-Tek™ level switch requires no periodic maintenance except cleaning as required. It is the responsibility of the user to determine the appropriate maintenance schedule, based on the specific characteristics of the application liquids.

Cleaning Procedure:

1. **Power:** Make Sure that all power to the sensor, controller and/or power supply is completely disconnected.
2. **Sensor Removal:** In all through-wall installations, make sure that the tank is drained well below the sensor prior to removal. Carefully, remove the sensor from the installation.
3. **Cleaning the Sensor:** Use a soft bristle brush and mild detergent, carefully wash the Switch-Tek™ level switch. Do not use harsh abrasives such as steel wool or sandpaper, which might damage the surface sensor. Do not use incompatible solvents which may damage the sensor's PP, PFA, PVDF or Ryton plastic body.
4. **Sensor Installation:** Follow the appropriate steps of installation as outlined in the installation section of this manual.

Testing the installation:

1. **Power:** Turn on power to the controller and/or power supply.
2. **Immersing the switch:** Immerse the sensing tip in its application liquid, by filling the tank up to the switches point of actuation. An alternate method of immersing the switch during preliminary testing is to hold a cup filled with application liquid up to the switch's tip.
3. **Test:** With the switch being fluctuated between wet and dry states, the switch indicator light in the controller should turn on and off. If the controller doesn't have an input indicator, use a voltmeter or ammeter to ensure that the switch produces the correct signal.
4. **Point of actuation:** Observe the point at which the rising or falling fluid level causes the switch to change state, and adjust the installation of the switch if necessary.

Maintenance Output to LED (LZ12 Only):

To wire the maintenance output wire to an LED, follow the wiring diagram below. The Yellow wire is connected to the LED and a 2.2kΩ resister in series and referenced back to the (+) of the power supply.

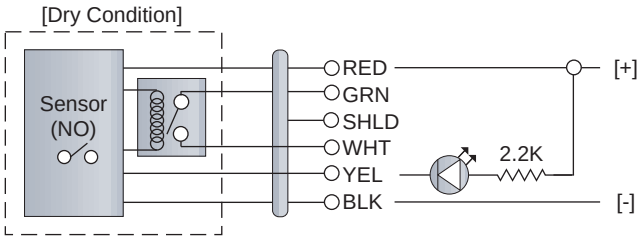

Maintenance Output to PLC (LZ12 Only):

To wire the maintenance output wire to an PLC, follow the wiring diagram below. The Yellow wire is connected to the PLC input with a 10 kΩ resister parallel to the PLC input and the (+) of the power supply.

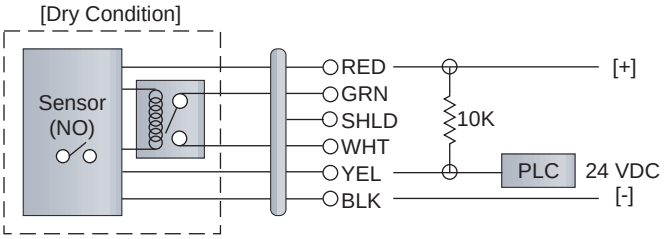

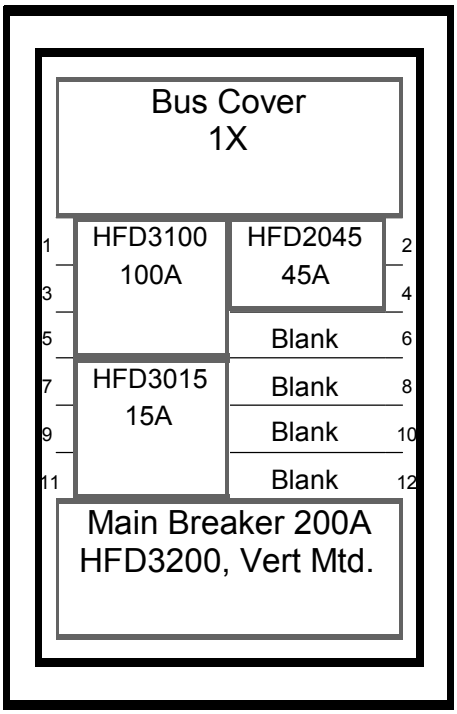

General Information **(Section 1 of 1)**

Service Voltage: 480V 3Ph 3W
Bus Rating & Type: 250A Copper
Enclosure: Type 3R
Neutral Rating: None
Ground Bar: Std. Bolted Copper, Cu cable only
S.C. Rating: 65k A.I.C.Fully Rated

Main Device Type: Main Breaker - Bottom Cable Entry
Main Terminals: Mechanical - (1) #14-4/0 (Cu/Al)
Neutral Terminals: None
Box Catalog No.: LWPQ2036
Trim: Complete Enclosure (Includes Trim)

Surface Mounted

Box Dimensions: 36" [914.4mm]H x 20" [508.0mm]W x 6.5" [165.1mm]D
Min. Gutter Size: Top = 5.5" [139.7mm] Bottom = 5.5" [139.7mm]
Left = 4" [101.6mm] Right = 4" [101.6mm]

Panel ID Nameplate: **(1) 1641**
Type: Plastic, adhesive-backed **(2) 480V 3Ph 3W**
Color: White with Black Letters **(3)**

UL
Service Entrance Label

Trim Lock:T-Handle Lock Assembly
Circuit Directory:Plastic Sleeve with Card
Painted Box:ANSI 61
Main Circuit Breaker Trip Type: Thermal-Magnetic

Device Modifications:

Ref #	**Description**
PLK1	Padlockable Hasp Lockoff
Ckt # 1, 7	
PHL1	Padlockable Hasp Lockoff
Ckt # 2	
Main Device Mods:	
PLK1	Padlockable Hasp Lockoff

Branch Devices

Qty	Poles	Trip	Frame	Amps	KAIC
1	3	100	HFD	100	65
1	3	15	HFD	100	65
1	2	45	HFD	100	65

Notes:

The information on this document is created by Eaton Corporation. It is disclosed in confidence and it is only to be used for the purpose in which it is supplied.

PREPARED BY	DATE	**Eaton Corporation**	
L754	**07/22/10**		
APPROVED BY	DATE	JOB NAME **1641**	
	07/22/10	DESIGNATION **1641**	
VERSION		TYPE	DRAWING TYPE
7.2		**PRL3a**	**Customer Approval**

NEG-ALT NUMBER	REVISION	DWG SIZE	G.O.	ITEM	SHEET
L7540722G001-0000		**A**			**1 OF 1**

Neg# L7540722G001 Alt# 0000 07/22/10
08:43:50

Customer Bill of Material

1 Pow-R-Line3a
Designations: 1641

All orders must be released for manufacture within 90 days of date of order entry. If approval drawings are required, drawings must be returned approved for release within 60 days of mailing. If drawings are not returned accordingly, and/or if shipment is delayed for any reason, the price of the order will increase by 1.0% per month or fraction there of for the time the shipment is delayed.

Neg# L7540722G001 Alt# 0000 07/22/10
08:43:50

Price Sheet for Panelboards

Description	Item	Qty
Designation	1641	
Product Version	7.2	
Quantity	1	1
200A, HFD 3P Main Breaker	1	1
Padlockable Hasp Lockoff Device	4	4
45A, 2P HFD Branch Breaker	1	1
15A, 3P HFD Branch Breaker	1	1
100A, 3P HFD Branch Breaker	1	1
Copper Main Bus, 250 Amps	1	1
Std. Bolted Cu Ground Bar (Cu Cable Only)	1	1
Type 3R Enclosure	1	1
Panel Nameplate - White with Black Letters	1	1
Service Entrance Label	1	1
Rated	Fully	
KAIC Rating	65	
Totals:		13

Neg# L7540722G001 Alt# 0000

07/22/10
08:43:50

Item List - Price Report

Product Name

Pow-R-Line3a (1641)

Totals:

AutomationDirect.com

User Manual

MDM-TEL

CONTACT INITIALIZED

Industrial Telephone Modem

Contents at a Glance

Section 1	Overview	4
Section 2	Performance Specifications	6
Section 3	Industrial Modem Mounting	7
Section 4	Electrical Connections	8
Section 5	Modem Configuration	11
Section 6	AT Command Summary	15
Section 7	S-Register Summary	19
Section 8	Maintenance Information	21
Section 9	Product Support and Additional Documents	22

c UL us LISTED

CE

Class I, Division 2,
Groups A, B, C, and D
Hazardous Locations

WARNING

Thank you for purchasing automation equipment from ***Automationdirect.com***™. We want your new automation equipment to operate safely. Anyone who installs or uses this equipment should read this publication (and any other relevant publications) before installing or operating the equipment.

To minimize the risk of potential safety problems, you should follow all applicable local and national codes that regulate the installation and operation of your equipment. These codes vary from area to area and usually change with time. It is your responsibility to determine which codes should be followed, and to verify that the equipment, installation, and operation are in compliance with the latest revision of these codes.

At a minimum, you should follow all applicable sections of the National Fire Code, National Electrical Code, and the codes of the National Electrical Manufacturer's Association (NEMA). There may be local regulatory or government offices that can also help determine which codes and standards are necessary for safe installation and operation.

Equipment damage or serious injury to personnel can result from the failure to follow all applicable codes and standards. We do not guarantee the products described in this publication are suitable for your particular application, nor do we assume any responsibility for your product design, installation, or operation.

Our products are not fault-tolerant and are not designed, manufactured or intended for use or resale as on-line control equipment in hazardous environments requiring fail-safe performance, such as in the operation of nuclear facilities, aircraft navigation or communication systems, air traffic control, direct life support machines, or weapons systems, in which the failure of the product could lead directly to death, personal injury, or severe physical or environmental damage ("High Risk Activities"). ***Automationdirect.com***™ specifically disclaims any expressed or implied warranty of fitness for High Risk Activities.

For additional warranty and safety information, see the Terms and Conditions section of our Desk Reference. If you have any questions concerning the installation or operation of this equipment, or if you need additional information, please call us at 770-844-4200.

This publication is based on information that was available at the time it was printed. At **Automationdirect.com**™ we constantly strive to improve our products and services, so we reserve the right to make changes to the products and/or publications at any time without notice and without any obligation. This publication may also discuss features that may not be available in certain revisions of the product.

TRADEMARKS

This publication may contain references to products produced and/or offered by other companies. The product and company names may be trademarked and are the sole property of their respective owners. ***Automationdirect.com***™ disclaims any proprietary interest in the marks and names of others.

Copyright 2001, *Automationdirect.com*™ Incorporated

All Rights Reserved

No part of this manual shall be copied, reproduced, or transmitted in any way without the prior, written consent of ***Automationdirect.com***™ Incorporated. ***Automationdirect.com***™ retains the exclusive rights to all information included in this document.

AVERTISSEMENT

Nous vous remercions d'avoir acheté l'équipement d'automatisation de ***Automationdirect.com***^{MC}. Nous tenons à ce que votre nouvel équipement d'automatisation fonctionne en toute sécurité. Toute personne qui installe ou utilise cet équipement doit lire la présente publication (et toutes les autres publications pertinentes) avant de l'installer ou de l'utiliser.

Afin de réduire au minimum le risque d'éventuels problèmes de sécurité, vous devez respecter tous les codes locaux et nationaux applicables régissant l'installation et le fonctionnement de votre équipement. Ces codes diffèrent d'une région à l'autre et, habituellement, évoluent au fil du temps. Il vous incombe de déterminer les codes à respecter et de vous assurer que l'équipement, l'installation et le fonctionnement sont conformes aux exigences de la version la plus récente de ces codes.

Vous devez, à tout le moins, respecter toutes les sections applicables du Code national de prévention des incendies, du Code national de l'électricité et des codes de la National Electrical Manufacturer's Association (NEMA). Des organismes de réglementation ou des services gouvernementaux locaux peuvent également vous aider à déterminer les codes ainsi que les normes à respecter pour assurer une installation et un fonctionnement sûrs.

L'omission de respecter la totalité des codes et des normes applicables peut entraîner des dommages à l'équipement ou causer de graves blessures au personnel. Nous ne garantissons pas que les produits décrits dans cette publication conviennent à votre application particulière et nous n'assumons aucune responsabilité à l'égard de la conception, de l'installation ou du fonctionnement de votre produit.

Nos produits ne sont pas insensibles aux défaillances et ne sont ni conçus ni fabriqués pour l'utilisation ou la revente en tant qu'équipement de commande en ligne dans des environnements dangereux nécessitant une sécurité absolue, par exemple, l'exploitation d'installations nucléaires, les systèmes de navigation aérienne ou de communication, le contrôle de la circulation aérienne, les équipements de survie ou les systèmes d'armes, pour lesquels la défaillance du produit peut provoquer la mort, des blessures corporelles ou de graves dommages matériels ou environnementaux («activités à risque élevé»). La société ***Automationdirect.com***^{MC} nie toute garantie expresse ou implicite d'aptitude à l'emploi en ce qui a trait aux activités à risque élevé.

Pour des renseignements additionnels touchant la garantie et la sécurité, veuillez consulter la section Modalités et conditions de notre documentation. Si vous avez des questions au sujet de l'installation ou du fonctionnement de cet équipement, ou encore si vous avez besoin de renseignements supplémentaires, n'hésitez pas à nous téléphoner au 770-844-4200.

Cette publication s'appuie sur l'information qui était disponible au moment de l'impression. À la société ***Automationdirect.com***^{MC}, nous nous efforçons constamment d'améliorer nos produits et services. C'est pourquoi nous nous réservons le droit d'apporter des modifications aux produits ou aux publications en tout temps, sans préavis ni quelque obligation que ce soit. La présente publication peut aussi porter sur des caractéristiques susceptibles de ne pas être offertes dans certaines versions révisées du produit.

MARQUES DE COMMERCE

La présente publication peut contenir des références à des produits fabriqués ou offerts par d'autres entreprises. Les désignations des produits et des entreprises peuvent être des marques de commerce et appartiennent exclusivement à leurs propriétaires respectifs. ***Automationdirect.com***^{MC} nie tout intérêt dans les autres marques et désignations.

Copyright 2001, *Automationdirect.com*^{MC} Incorporated

Tous droits réservés

Nulle partie de ce manuel ne doit être copiée, reproduite ou transmise de quelque façon que ce soit sans le consentement préalable écrit de la société ***Automationdirect.com***^{MC} Incorporated. ***Automationdirect.com***^{MC} conserve les droits exclusifs à l'égard de tous les renseignements contenus dans le présent document.

Section 1 Overview

This rugged industrial telephone modem has been designed for operation in electrical enclosures installed in harsh environments. This industrial modem supports all standard Hayes AT commands, Fax Class 1 and Class 2 commands and S-registers, and therefore can be set-up as an external modem on any PC. The industrial modem is compatible with any telecommunications or dial-up networking software.

The industrial modem allows easy access to PLCs, RTUs, I/O equipment, industrial computers, remote weather stations, pagers, and many other devices via standard analog PSTN-provided dial-up telephone connections. The modem may be DIN-rail or panel mounted, adjacent to other DIN-rail components, inside of new or existing enclosures. Most Windows software can communicate through the industrial modem, to perform file transfers, diagnostics, program debugging and many other operations.

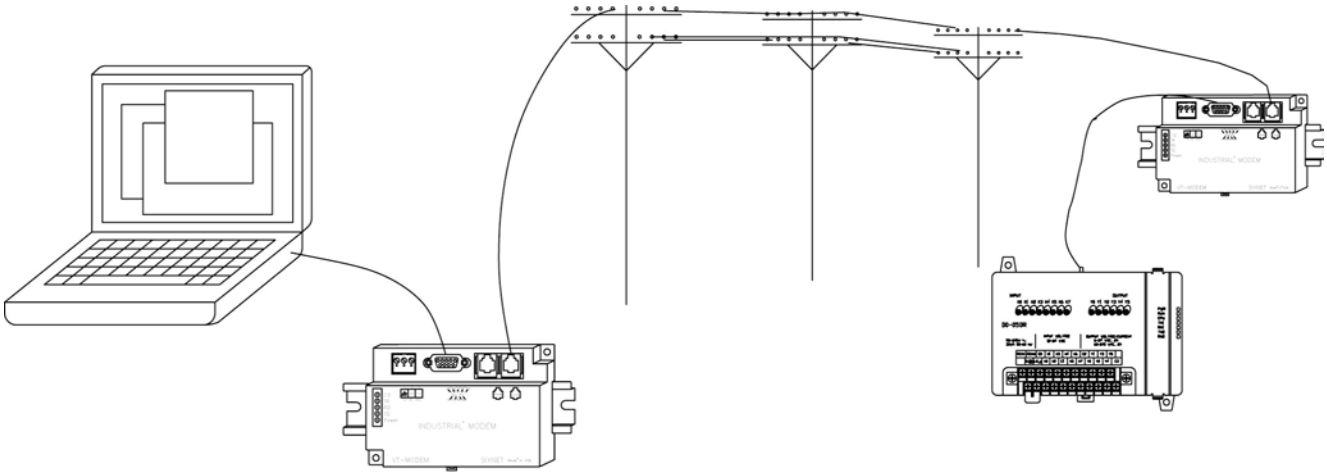

The industrial modem allows communication to remote sites for data retrieval or diagnostics.

Note: The industrial modem communicates over analog phone lines only.

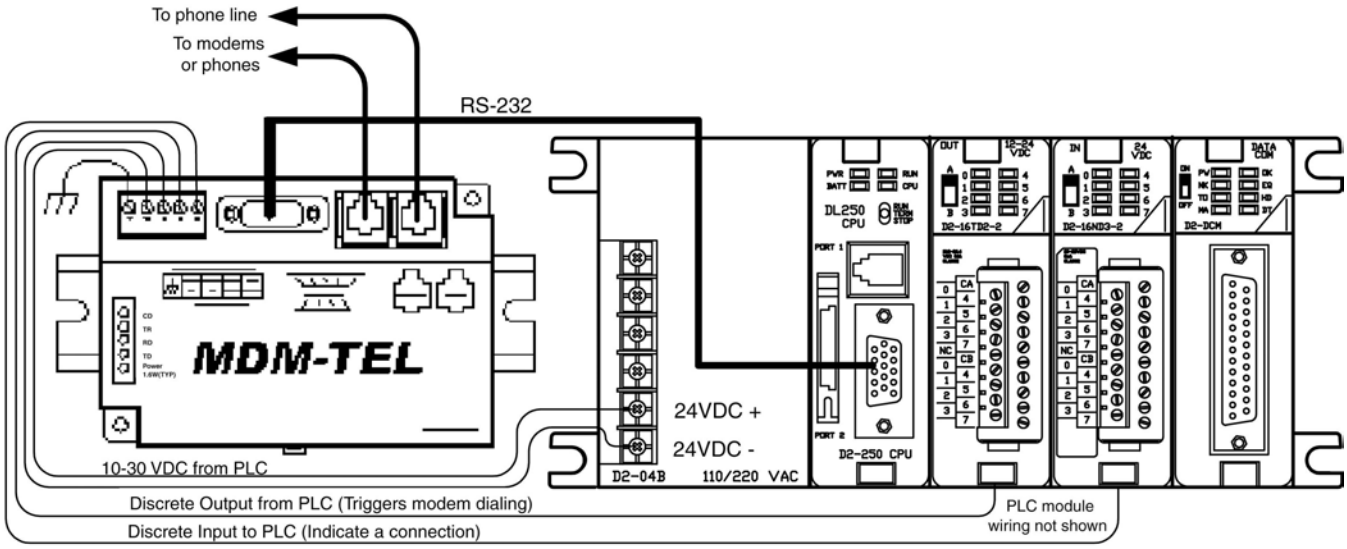

The industrial PLC Contact Initialized Modem has the ability to dial out based on an alarm contact closure or PLC discrete output.

Industrial Contact Initialized Modem

The contact initialized action is triggered by a switch closure or PLC output signal. When the self-dial input is energized, the modem dials a pre-stored phone number and optionally identifies itself by way of a pre-stored ASCII message. Flexible features allow this modem to perform retries or even connect to an alternate number until it has verified that a connection has been established. The call will terminate when either:

- The computer completes its polling and hangs up
- The self-dialing discrete input is turned off
- A telephone line problem disrupts the call.

The contact initialized feature enables field-installed equipment to establish a telephone link based upon a simple switch closure. This modem adds "dial upon alarm" intelligence to any remote site. This modem is ideal for:

DIALING UPON ALARM FROM ANY PLC

This modem establishes a connection based upon a coil output from any PLC. Once a connection has been established, the PLC's system (programming) port is connected to the computer at the other end of the phone link and may be polled by that computer as if the computer had initiated the call. When the modem connects to the central computer, it identifies itself so the computer can download the appropriate I/O driver and interrogate the PLC.

SENDING A MESSAGE BASED UPON A SWITCH CONTACT

Locations that do not have PLCs (or other intelligence) can originate calls to alert you to low tank levels, over temperature conditions, or other alarms. Simply connect the appropriate alarm contact to the modem's input. The modem will dial the pre-stored phone number and deliver a stored ID message to the computer at the receiving end; this ID message can be up to 32 characters long.

SETUP WIZARD

A modem setup utility is provided on the Industrial Modem CD to help you quickly configure the modem. In most applications, no knowledge of modem AT commands or S register contents is necessary. Pre-configured profiles, for common situations, are provided for your convenience.

Section 2 Performance Specifications

Telephone Port	
Max. Data Rate	33.6 kbps (V.34)
Compatibility	V.34, V.32 bis, V.32, V.22, V.22A/B, V.23, V.21, Bell 212A
Data Compression	V.42bis/MNP 5
Error Correction	V.42/MNP 2-4
Max Fax Modem Rate	14.4 kbps (V.33)
Fax Modem Compatibility	Group 3 (V.33, V.17, V.29, V.27ter, V.21 ch. 2)
Ringer Equivalent	0.3
Line Jack	RJ11
Phone Jack	RJ11
RS232 Port	
Max. RS232 Rate	115.2 kbps (Kilobaud)
RS232 Signal Support	TXD, RXD, CTS, RTS, DCD, DTR, DSR, RI, GND
RS232 Connector	DB9 female
Command Set	All standard AT and S register commands including Class 1 and Class 2 Fax commands
Status LEDs	
CD (Carrier detect)	The modem has detected a carrier on the phone line (a remote modem has been detected).
TR (Data Terminal Ready)	The PC (or other device) has established a connection to the modem and is ready.
RD (Receive Data)	Flashes as data is received from the phone line.
TD (Transmit Data)	Flashes as data is sent out the phone line.
Power	On when power is present.
General Characteristics	
Input Power	10 - 30 VDC
Input Current Normal / Low Power	97mA @ 24VDC (normal) / 64mA @ 24 VDC (low power)
Operating Temperature	-30 ° to 70 ° C
Storage Temperature	-40 ° to 85 ° C
Humidity	5 to 95% RH (non-condensing)
Mounting	DIN rail or panel mount
Dimensions	3.23 W x 4.75L x 1.35H inches (8.2 W x 12.1 L x 3.4H cm)
PLC Discrete I/O Interface	
Trigger Input (From PLC)	Connects to PLC output. Starts auto-dialing upon transition from OFF to ON. Modem will stay connected while input is ON.
Voltage Range	9 to 30 VDC
Input Current	6.5 mA at 24 VDC
Max. OFF Voltage	5 VDC
On-line Output (To PLC)	Output is ON as long as a connection exists (carrier detect).
Output Characteristics	Sourcing – switches supply power
Max. Output Current	100 mA

Section 3 Modem Mounting

This industrial modem snaps onto a standard DIN rail (DIN EN 50022), or can be mounted to a flat panel using #6 or #8 screws. See Figure 3-1. The modem can be installed in any orientation, adjacent to other DIN rail components or in any convenient location within the enclosure. The modem should be installed within 6 feet of the device it will be connected to.

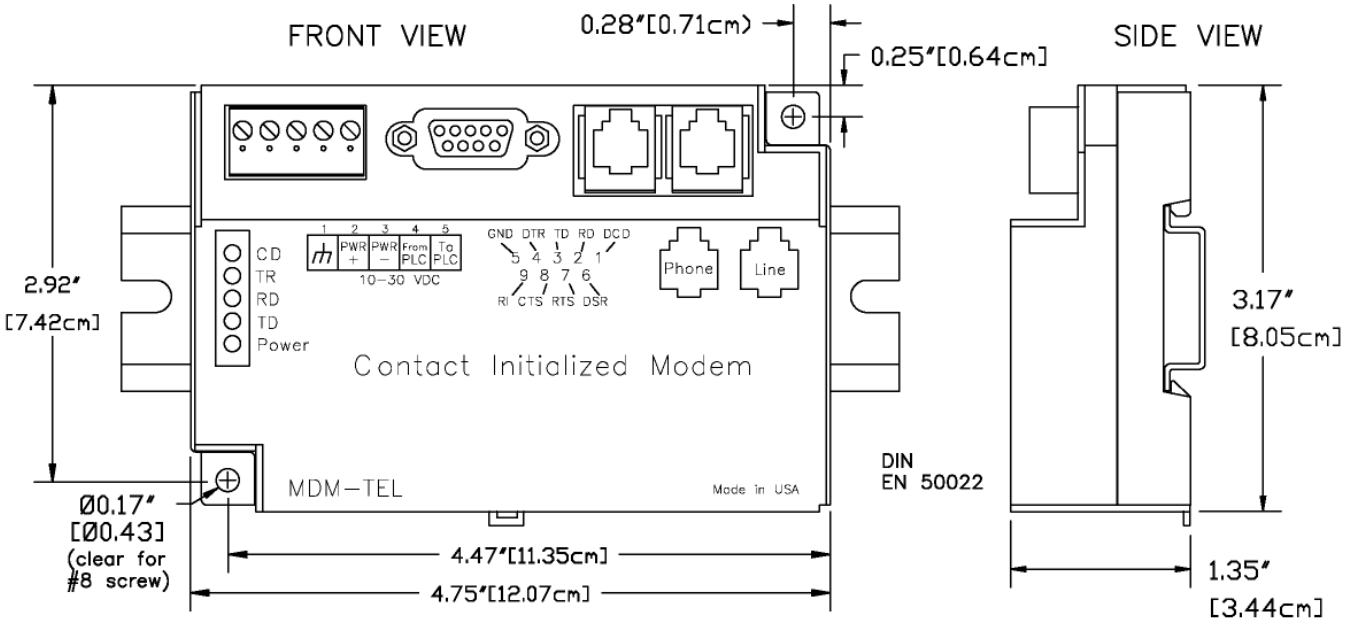

Figure 3-1: MODEM DIMENSIONS

For DIN rail mounting, hook the top, rear of the modem onto the top edge of the DIN rail. Using a small flat head screwdriver, pull down on the spring-loaded tab on the bottom of the modem and push the modem back against the rail. Reverse these steps to remove the modem. See Figure 3-2 below.

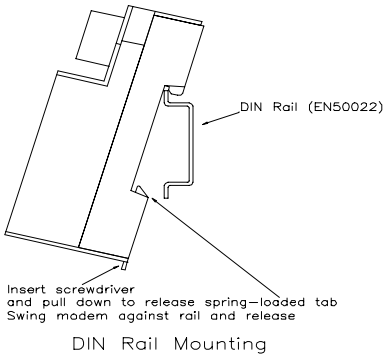

Figure 3-2: DIN RAIL MOUNTING

Section 4 Electrical Connections

RS232 Connections:

Use a straight-through or equivalent serial cable to connect the modem's RS232 female port (DB9 cable male end) to the RS232 male port on a PC or other "Data Terminal Equipment" (DTE) device (DB9 cable female end). Figure 4-1 details the pin-out of a straight-through serial communications cable suitable for connecting a DCE device (MDM-TEL) to a DTE device (PC, PLC or other device). A suitable DB9 RS-232 cable is provided with the MDM-TEL modem.

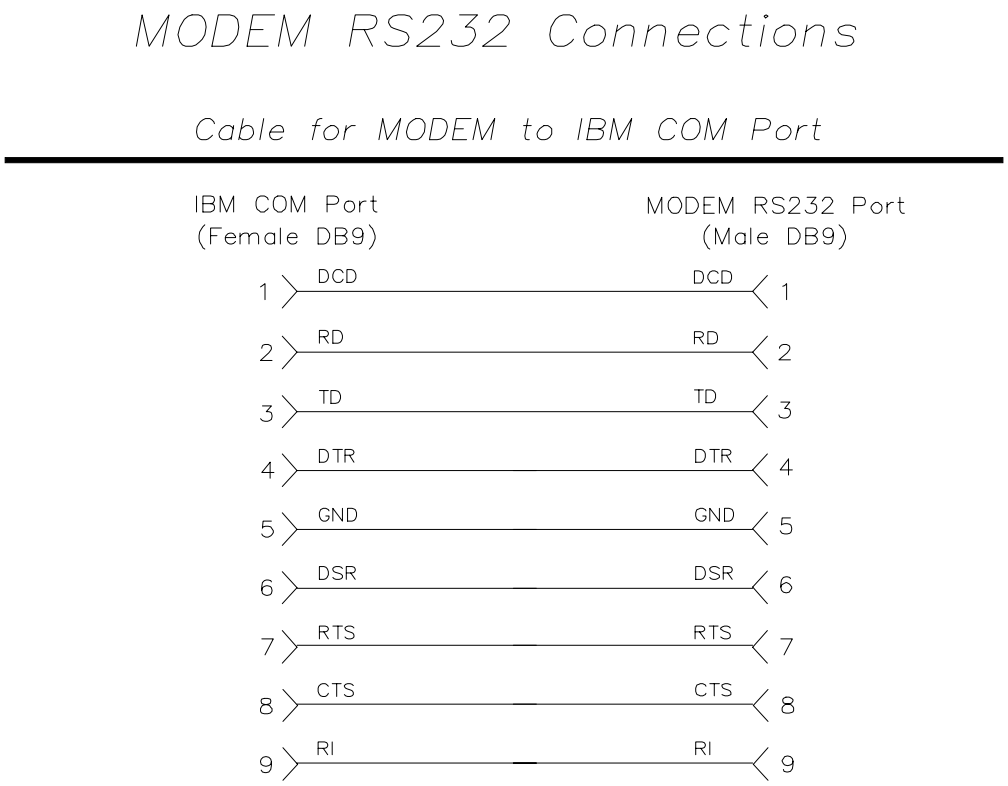

Figure 4-1: MODEM CABLE WIRING

(Standard DB9 Cable)

NOTE: A suitable serial cable has been provided with the MDM-TEL. The provided null modem adapter is not required for normal serial communications between the MDM-TEL and a PC.

Automation*Direct* cables for connecting ***Direct***LOGIC PLC's to the MDM-TEL modem are shown in Fig 4-2. The null modem adapter supplied with the modem is required when using these cables. The pinouts for custom cables between ***Direct***LOGIC PLC's and the MDM-TEL modem are detailed in the MDM-TEL Application Note provided on the MDM-TEL CD and available from www.automationdirect.com. For other devices or PLC's, please refer to the product documentation for its cable pinouts.

	DL05	DL06 port 2	D2-240 port 2	D2-250 port 2	D2-DCM	D3-350 port 2	D3-DCM	D4-450 port 1	D4-450 port 2	D4-DCM
D2-DSCBL	X		X						X	
D2-DSCBL-1		X		X						
D3-DSCBL-2					X	X	X	X		X

AutomationDirect does not recommend using modems on ***Direct***Logic ports not listed in the above chart due to telecommunication timing irregularities.

FIG 4-2

NOTE: A null modem adapter **must** be installed on the MDM-TEL for RS-232 communication between a ***Direct***LOGIC PLC and the MDM-TEL modem using the standard Automation*Direct* PLC cables indicated in Fig 4.2. A slim-profile null modem adapter is provided.

Industrial Modem Power, Phone Line, I/O connections:

DC Power Wiring
Connect 10 - 30 VDC to the industrial modem as shown in Figure 4-3. The modem can usually be powered from the same source as other devices in the enclosure. All the screw terminals should be tightened to a maximum of 3.48 in-lbs.

Telephone Cable
Connect analog phone lines to the RJ11 jacks as appropriate. One RJ-11 jack is provided to connect directly to a telephone (optional) and the second RJ-11 jack functions as the connection to the telephone network.

PLC Self-Dial I/O Connections
Connect a 10-30VDC signal to the 'From PLC' (trigger input) terminal. An OFF to ON transition of this signal starts the auto-dialing sequence. The modem will call and remain connected while the signal is ON. When the signal goes false, the modem will terminate the connection or the call in progress.

The 'To PLC' (on-line output) terminal will go ON (ON = user supplied VDC input) when a modem-to-modem connection has been established and the proper 'Acknowledge Message' has been received.

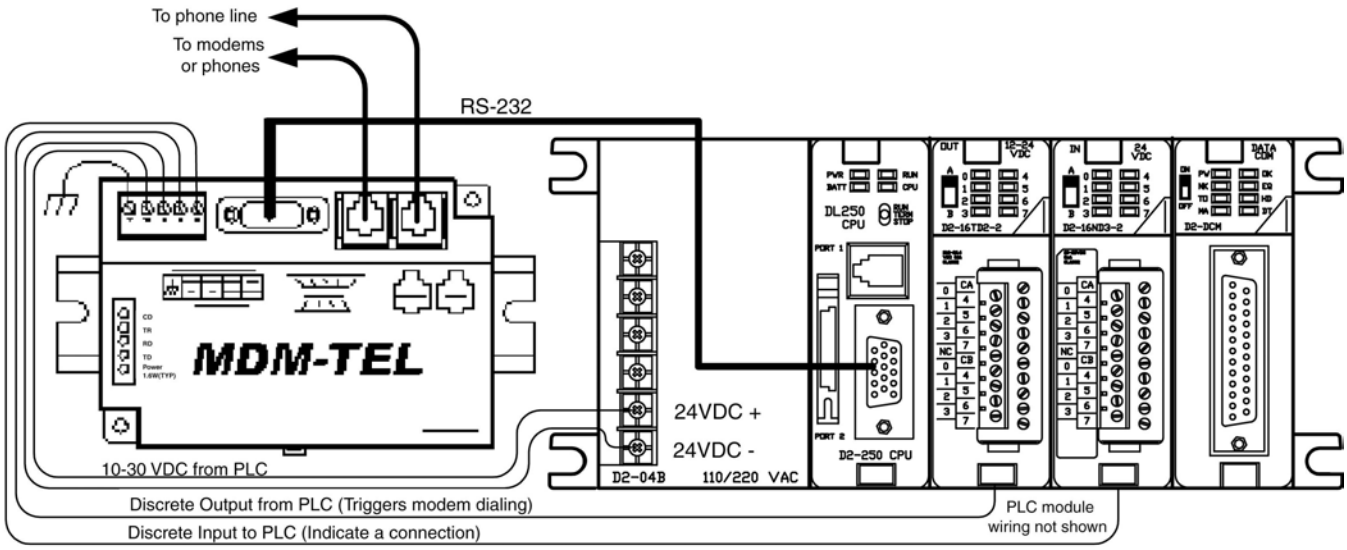

Figure 4-3: INDUSTRIAL MODEM WIRING

Section 5 Modem Configuration

Configuration as an External Modem on a PC:

The Modem can be connected directly to a PC. The modem will need to be "installed" in Windows prior to use. Here are instructions on how to install the modem in both Windows 95, 98, NT, 2000 and Windows XP.

<u>Modem Installation in Windows 95/98/NT/2000/XP</u>

Plug and Play method (recommended):

1) With the PC off, connect DC power and the telephone line to the modem. Connect a communications cable (STRAIGHT-THROUGH or equivalent) between the modem and the PC. Turn on the PC. During the boot-up process, Windows should detect the modem and display the New Hardware Found dialog box.
2) Make the selection "Select from a list of alternative drivers".
3) The Select Device dialog will be displayed. In the column labeled Manufacturers, select "Standard Modem Types". In the column labeled Models, select "Standard 28800 bps Modem". Click OK. Windows will then complete the boot-up process. (The standard Windows driver is used for the Industrial Modem. Although the modem supports baud rates to 33,600 bps, the selections in Windows are limited to 28800 bps.)
4) To verify that the modem has been installed, select Start → Settings → Control Panel, and then double click the Modems icon. The modem should be listed as "Standard 28800 bps Modem".

Here is an alternate modem installation procedure (use if the PC is already powered up):

1) Connect the DC power, communications cable (STRAIGHT-THROUGH or equivalent) and telephone line as described above.
2) Select Start → Settings → Control Panel, and then double click the Modems icon.
3) The Install New Modem dialog box will appear. Do not select the "Don't detect my modem, I will select it from a list". Instead, click Next and allow Windows to search the COM ports and detect the modem.
4) Windows should find a modem called Standard Modem. Click Next and Windows will complete installation of the Standard Modem. (Alternately, click Change and select "Standard Modem Types" from the Manufacturers list, and "Standard 28800 bps Modem" from the Models list.)
5) To verify that the modem has been installed, select Start → Settings → Control Panel, and then double click the Modems icon. The modem should be listed as either a "Standard Modem" or a "Standard 28800 bps Modem" depending on the steps followed above.
6) Upon re-booting the machine, Windows may still find the modem as new hardware. If this happens, select "Do not install a driver (Windows will not prompt again)".

Modem Installation in Windows NT

1) Select Start → Settings → Control Panel, and then double click the Modems icon.
2) The Install New Modem dialog box will appear. Do not select the "Don't detect my modem, I will select it from a list". Instead, click Next and allow Windows to search the COM ports and detect the modem.
3) Windows should find a modem called Standard Modem. Click Next and Windows will complete installation of the Standard Modem. (Alternately, click Change and select "Standard Modem Types" from the Manufacturers list, and "Standard 28800 bps Modem" from the Models list.)
4) To verify that the modem has been installed, select Start → Settings → Control Panel, and then double click the Modems icon. The modem should be listed as either a "Standard Modem" or a "Standard 28800 bps Modem" depending on the steps followed above.

Once the industrial modem has been added to your Windows 95, 98, NT or XP system, it is ready for use.

If you are using a PLC or other device, refer to the documentation for that device as necessary.

To Remove a Modem

If it ever becomes necessary to re-install the modem for any reason, select Start → Settings → Control Panel, and then double click the System icon. Next, click the Device Manager tab. The list should display a Modems icon. Double click the Modems icon. Highlight the modem to be removed and then click the Remove button. To reinstall the modem, follow the installation steps as previously described.

Configuring Using the Setup Wizard:

It is highly recommended that the Setup Wizard be used for modem configuration. Simply check the appropriate boxes, choose the appropriate communication settings from the drop down lists, and load the configuration into the modem. This utility does not require user knowledge of AT commands and S-registers.

Refer to the online help system in the Setup Wizard for instructions and application notes.

Note:
The Setup Wizard must be used to configure the parameters of the industrial modem. See MDM-TEL application note for details on configuring the MDM-TEL for ***Direct***LOGIC PLC's.

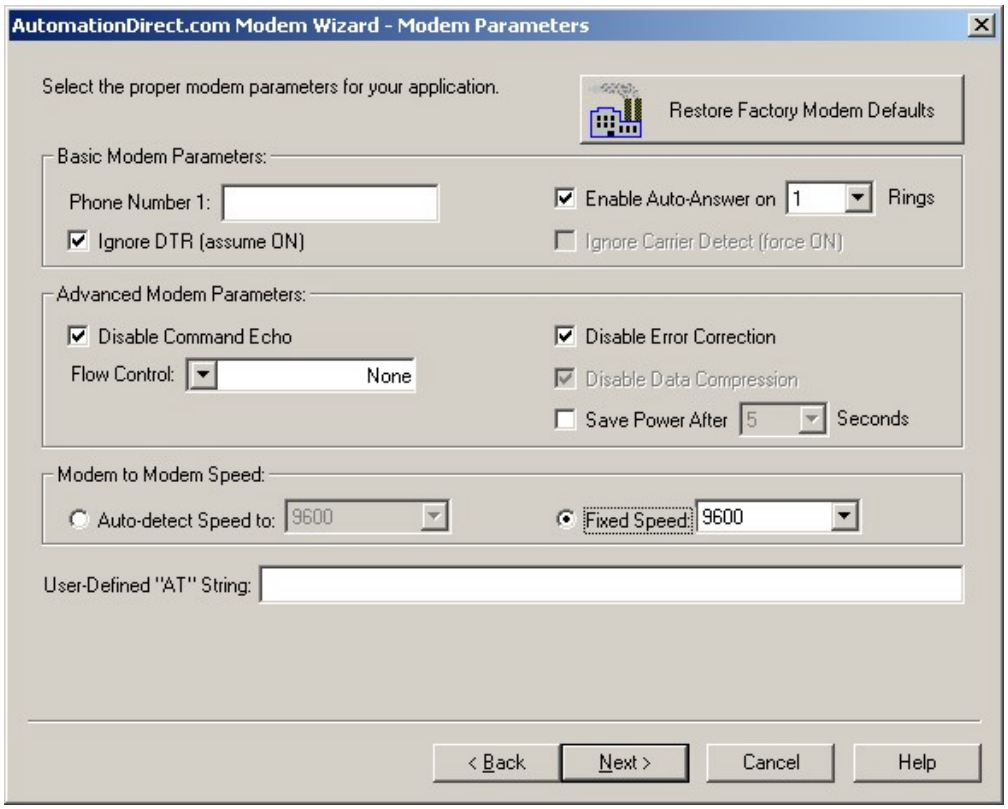

Setting the Modem's Serial Port Baud Rate for the PLC

The industrial modem has an automatic baud rate detection feature that lets the modem recognize commands through its serial port at any supported baud rate. When auto-detect is selected, if the modem is connected to a device that does not send commands or data unless spoken to (such as most PLCs), then the modem will pass information from the phone line to its serial port at the last auto-detected baud rate.

The industrial modem is defaulted at the factory for 9600-baud. To change this setting, connect the modem to a PC. Start the Setup Wizard and choose the baud rate that matches the PLC's baud rate. Then choose the appropriate settings and write the configuration to the modem. Exit the Setup Wizard and reconnect the modem to the PLC. (Be sure to cycle power to the modem.) Call the modem and verify that the PLC is responding to commands.

Limiting the Phone Line Connection Speed for Reliability

Typically, when a modem-to-modem connection is established, the two modems negotiate and connect at the fastest possible phone line speed that is within the capability of both modems. The quality of the phone line connection (during the negotiation) will be taken into account. If both modems are of a modern design, the phone line speed can be 33.6K bits per second (or higher, using data compression). Note that this phone line speed is independent of the DTE (serial port) speed, though some older modems require that the phone line speed and DTE speed be the same.

In practice the quality of any phone line changes continually, and frequent data errors may occur. The probability of errors usually increases as the phone line speed increases. Therefore, it is often desirable to restrict the phone line speed to a rate that will provide good performance and yield reliable data. It is also commonplace to restrict the phone line speed to maintain compatibility when replacing an older modem with an industrial modem.

By default, the modem will permit any phone line speed up to 115.2 kbps when data compression is enabled. If you experience intermittent or unreliable communication, try setting the modem-to-modem speed (in the Setup Wizard) to a lower value, to restrict the phone line speed. (Remember to load the new configuration to the modem.)

Industrial Modem Profile Summary

Here is a summary of the active configuration, user profile 0, user profile 1 and the factory defaults when the modem is shipped.

Each time the modem is powered up; first the factory default settings (as listed in Section 6) are loaded into the active configuration. Next, the designated user stored profile is loaded into the active configuration. User profile 0 is loaded by default (see the &Y command in Section 6) and it contains all factory defaults with the exception that it is set to auto answer (register S0=1), and ignore the DTR signal (&D0).

The User profile 1 contains all normal factory defaults (as listed in Section 6).

ACTIVE CONFIGURATION:
B1 E1 L1 M1 N1 Q0 T V1 W0 X4 Y0 &C1 &D0 &G0 &J0 &K3 &Q5 &R1 &S0 &T5 &X0 &Y0
S00:001 S01:000 S02:043 S03:013 S04:010 S05:008 S06:002 S07:050 S08:002 S09:006
S10:014 S11:095 S12:050 S18:000 S25:005 S26:001 S36:007 S37:000 S38:020 S44:020
S46: 138 S48:007 S95:000

STORED PROFILE 0:
B1 E1 L1 M1 N1 Q0 T V1 W0 X4 Y0 &C1 &D0 &G0 &J0 &K3 &Q5 &R1 &S0 &T5 &X0
S00:001 S02:043 S06:002 S07:050 S08:002 S09:006 S10:014 S11:095 S12:050 S18:000
S36:007 S37:000 S40:104 S41:195 S46:138 S95:000

STORED PROFILE 1:
B1 E1 L1 M1 N1 Q0 T V1 W0 X4 Y0 &C1 &D2 &G0 &J0 &K3 &Q5 &R1 &S0 &T5 &X0
S00:000 S02:043 S06:002 S07:050 S08:002 S09:006 S10:014 S11:095 S12:050 S18:000
S36:007 S37:000 S40:104 S41:195 S46:138 S95:000

FACTORY DEFAULTS:
B1 E1 L1 M1 N1 Q0 T V1 W0 X4 Y0 &C1 &D2 &G0 &J0 &K3 &Q5 &R1 &S0 &T5 &X0
S00:000 S02:043 S06:002 S07:050 S08:002 S09:006 S10:014 S11:095 S12:050 S18:000
S36:007 S37:000 S40:104 S41:195 S46:138 S95:000

Section 6 AT Command Summary

The industrial modem supports the AT commands, Fax Class 1 and Class 2 commands listed in this Section. The modem contains a set of factory default settings, which can always be restored by the user. (See the &F command.) The modem also provides two user profiles (profile 0 and profile 1) which hold settings as set and saved by the user. (See the &W command.) The settings currently in use by the modem are generally referred to as the active configuration.

Notes:
The Industrial Modem parameters can only be set using the Setup Wizard, which is provided. Refer to the on-line help in the Setup Wizard for more information.

The following tables only summarize the supported AT commands. The valid parameters and default settings for each AT command are documented in the online help system of the Setup Wizard.

Command	Function
A/	Re-execute Last Command; do not proceed by AT command and do not follow with a carriage return.
A	Go off hook and Answer A Call
AT=x	Write value x to last selected register.
AT?	Report the value of last selected register.
Bn	Set data standard to CCITT(Europe et. al.) or Bell Mode(U.S., Canada) for connections at 300 or 1200 bps.
Cn	Carrier Control (parameter = 1 only)
Dn	Dial (originate a call); typical usage: ATDT5551212 to tone dial number. ATDS=n to dial nth stored number.
E	Echo command to monitor when typed
Fn	Not available.
Hn	Disconnect (Hang up)
In	Identification; reports product code, name, ROM and firmware data, etc.
Ln	Speaker Volume (not available)
Mn	Speaker Control (not available)
Nn	Automode Enable; enabled allows connection at highest possible modem speed, disabled fixes speed according to register S37.
On	Return To On-line Data Mode
P	Set Pulse Dial Default.
Qn	Quiet Results Codes Control; when enabled, result codes are reported to the monitor.
Sn	Establishes S Register n as the last register accessed
Sn-x	Write value x to S Register n.
Sn?	Reports the value of S Register n.
T	Set Tone Dial Default
Vn	Set Result Code Format to terse or verbose.
Wn	Connect Message Control sets the format of the connect messages.
Xn	Extended results code
Yn	Long space disconnect

Zn	Perform Soft Reset and Restore stored user configuration profile 0 or 1.
&Cn	RLSD (DCD) Option; set DCD signal to indicate presence of carrier or forces DCD signal on at all times.
&Dn	DTR Option; set how modem interprets the DTR signal.
&Fn	Restore factory configuration profile 0 or 1.
&Gn	Select guard tone
&Jn	Telephone jack control
&Kn	Set Flow Control
&Mn	Asynchronous/synchronous mode selection
&Pn	Select pulse dial make/break ratio
&Qn	Asynchronous/synchronous mode selection
&Rn	RTS/CTS option sets how the modem controls the CTS signal
&Sn	DSR Override sets how the modem controls the DSR signal
&Tn	Test & diagnostic settings
&V	Display current configuration, stored user profiles and stored telephone numbers
&V1	Display last connection statistics
&Wn	Store current active configuration in one of the two user profiles
&Xn	Select synchronous clock source
&Yn	Designate a default-reset profile. This profile will be active after a hard reset
&Zn=x	Store phone number; n = 0 to 3 and x = dial string
%E	Enable/disable line quality monitor and autoretrain or fallback/fail forward
%L	Report line signal level
%Q	Report line signal quality
%7	Plug and Play Serial Number
%8	Plug & Play Vendor ID, Prod. No.
\Kn	Break Control sets how the modem responds to a break signal
\Nn	Sets the Operating Mode of the modem: direct, normal, reliable or auto reliable
\Vn	Single Line Connect Message Enable
+MS	Select Modulation allows control of the modulation the modem uses to negotiate a connection
+Hn	Enable/Disable RPI and DTE Speed
-SDR	Enable/disable distinctive ring
**	Download to flash memory
%Cn	Enable/Disable Data Compression (MNP5, V42bis or both)
\An	Select Max MNP Block Size
\Bn	Transmit Break to Remote sets the length of break signal sent to remote modem (in non error correction mode)
)Mn	Enable Cellular Power Level Adjust (only included for compatibility and performs no function)
*Hn	Link Negotiation Speed (only included for compatibility and performs no function)
-Kn	MNP Extended Services
-Qn	Enable Fallback to V.22bis/V.22 (only included for compatibility and performs no function)
-SEC=n	Enable/Disable MNP10-EC
@Mn	Initial Cellular Power Level Setting (only included for compatibility and performs

	no function)
:E	Compromise Equalizer Enable (only included for compatibility and performs no function)
*B	Display Blacklisted Numbers
*D	Display Delayed Numbers
*NCn	Country Select
FAX CLASS 1:	
+FCLASS=n	Service Class
+FAE=n	Data/Fax Auto Answer
+FRH=n	Receive Data with HDLC Framing
+FRM=n	Receive Data
+FRS=n	Receive Silence
+FTH=n	Transmit Data with HDLC Framing
+FTM=n	Transmit Data
+FTS=n	Stop Transmission and Wait
FAX CLASS 2:	
+FCLASS=n	Service Class
+FAA=n	Adaptive Answer
+FAXERR	Fax Error Value
+FBOR	Phase C Data Bit Order
+FBUF?	Buffer Size (Read Only)
+FCFR	Indicate Confirmation to Receive
+FCON	Facsimile Connection Response
+FCIG	Set the Polled Station Identification
+FCIG:	Report the Polled Station Identification
+FCR	Capability to Receive
+FCSI:	Report the Called Station ID
+FDCC=	DCE Capabilities Parameters
+FDCS:	Report Current Session
+FDCS=	Current Session Results
+FDIS:	Report Remote Capabilities
+FDIS=	Current Session Parameters
+FDR	Begin or Continue Phase C Receive Data
+FDT=	Data Transmission
+FDTC:	Report the Polled Station Capabilities
+FET:	Post Page Message Response
+FET=n	Transmit Page Punctuation
+FHNG	Call Termination with Status
+FK	Session Termination
+FLID=	Local ID String
+FLPL	Indicate a Document for Polling
+FMDL?	Identify Model
+FMFR?	Identify Manufacturer
+FPHCTO	Phase C Time Out
+FPOLL	Indicates Polling Request

+FPTS:	Page Transfer Status
+FREV?	Identify Revision
+FSPL	Enable Polling
+FTSI:	Report the Transmit Station ID
Caller ID:	
#CID=0	Disable Caller ID
#CID=1	Enable Caller ID with Formatted Presentation
#CID=2	Enable Caller ID with Unformatted Presentation
AudioSpan and DSVD:	
-SMS=	Select AudioSpan/DSVD Mode
-SSE=	Enable/Disable DSVD
-SQS=	Select AudioSpan Modulation
Synchronous Access Mode:	
+ES	Enable/Disable Synchronous Access Mode in the client or central site modem
+ESA	Configures the Operation of the Synchronous Access Submode
+ITF	Selects Transmit Flow Control Thresholds
Voice/Audio:	
#BDR	Select Baud Rate (Turn Off Autobaud)
#CLS	Select Data, Fax, or Voice
#MDL?	Identify Model
#MFR?	Identify Manufacture
#REV?	Identify Revision Level
#SPK=	Speakerphone Setting
#TL	Audio Output Transmit Level
#VBQ?	Query Buffer Size
#VBS	Bits per Sample
#VBT	Beep Tone Timer
#VCI?	Identify Compression Method
#VGT	Set Playback Volume in the Command State
#VLS	Voice Line Select
#VRA	Ringback Goes Away Timer (Originate)
#VRN	Ringback Never Came Timer (Originate)
#VRX	Voice Receive Mode
#VSD	Enable Silence Deletion (No Function, Command Response Only)
#VSK	Buffer Skid Setting
#VSP	Silence Detection Period (Voice Receive)
#VSR	Sampling Rate Selection
#VSS	Silence Detection Tuner (Voice Receive)
#VTD	DTMF/Tone Reporting
#VTM	Enable Timing Mark Placement
#VTS	Generate Tone Signals
#VTX	Voice Transmit Mode

Section 7 S Register Summary

Note:
The following tables only summarize the supported S-registers. A description for each S-register may be found in the online help system of the Setup Wizard.

Register	Function	Range	Units	Default
S0	Number of rings required before modem auto answers	0-255	rings	0
S1	Ring counter increments each time a ring is detected	0-255	rings	0
S2	Escape character	0-255	ASCII	43
S3	Carriage return character	0-127	ASCII	13
S4	Line feed character	0-127	ASCII	10
S5	Backspace character	0-255	ASCII	8
S6	Maximum time to wait after going off-hook to dial when blind dialing	2-255	sec	2
S7	Maximum time to wait for carrier after dialing before hanging up	1-255	sec	50
S8	Pause time for dial delay modifier	0-255	sec	2
S9	Carrier detect response time; duration that carrier must be present for modem to consider it a valid connection	1-255	0.1s	6
S10	Carrier loss disconnect time; carrier must be absent for this time for modem to consider it a lost connection	1-255	0.1s	14
S11	DTMF tone duration	50-255	0.001s	95
S12	Escape prompt delay; this delay must be present after receipt of the last character of the escape sequence(before receipt of any other character) for the escape sequence to be recognized	0-255	0.02s	50
S13	Reserved	-	-	-
S14	General bit mapped options indicates the status of the following options: echo, quiet mode, results codes, tone/pulse and originate/answer	-	-	138(8Ah)
S15	Reserved	-	-	-
S16	Test mode bit mapped options (&T)	-	-	0
S17	Reserved	-	-	-
S18	Test timer –length of test initiated by &Tn command	0-255	s	0
S19	AutoSync Bit Mapped Options	-	-	0
S20	AutoSync HDLC Addr or BSC Sync Char	0-255	-	0
S21	V24/general bit mapped options indicates the status of the following options: CTS(&Rn), DTR(&Dn), DCD(&Cn), DSR(&Sn), long space disconnect(Yn)	-	-	52(34h)
S22	Speaker/results bit mapped options indicates the status of the following options: speaker control(Ln), volume(Mn), results codes(Xn)	-	-	117(75h)
S23	General Bit Mapped Options	-	-	58(3Ah)
S24	Sleep inactivity timer sets the length of time that the modem	0-255	s	0

	will operate in normal mode without activity on the phone or RS232 port before entering sleep mode			
S25	Delay to DTR (CT108) off sets time modem ignores DTR signal before taking action specified by &Dn	0-255	s/0.01s	5
S26	RTS-to-CTS (CT105 to CT106) delay if &R0 is set	0-255	0.01s	1
S27	General Bit Mapped Options for sync/async control(&Mn/&Qn), leased line control(&Ln), clock select(&Xn), Bell/CCITT mode(Bn)	-	-	73(49h)
S28	General Bit Mapped Options indicates options for pulse dialing(&Pn), MNP Link negotiation speed(*Hn)	-	-	0
S29	Flash Modifier Time sets the length of time the modem will go on hook if the flash dial modifier(!) is encountered in the dial string	0-255	10 ms	70
S30	Inactivity timer sets the length of time the modem will remain on line if no data is sent or received	0-255	10s	0
S31	General Bit Mapped Options	-	-	194(C2h)
S32	XON character	0-255	ASCII	17(11h)
S33	XOFF character	0-255	ASCII	19(13h)
S34-S35	Reserved	-	-	-
S36	LAPM Failure Control used when register S48=128	-	-	7
S37	Desired Line Connection Speed (when N1 is set)	-	-	0
S38	Delay before forced hang-up (time delay between the receipt of H command to disconnect and the actual disconnect operation	0-255	s	20
S39	Flow control bit mapped options	-	-	3
S40	General bit mapped options	-	-	104(68h)
S41	General bit mapped options	-	-	195(C3h)
S42-S45	Reserved	-	-	-
S46	Enable/Disable Data Compression	-	-	138
S48	V.42 Negotiation Control	-	-	7
S82	LAPM Break Control	-	-	128(40h)
S86	Call Failure Reason Code; when the No Carrier result code is issued, the reason for the failure is written to this register	0-255	-	-
S91	PSTN transmit attenuation level	0-15	dBm	10
S92	Fax transmit attenuation level	0-15	dBm	10
S95	Result code messages control	-	-	0

Section 8 Maintenance Information

Troubleshooting Tips

Default LED Indications

The Industrial Modem has the following LEDs.

LED	Default Indication
Carrier Detect	This LED will come ON once a phone line connection has been established, and will remain on for as long as the connection is maintained.
Data Terminal Ready	This LED should be ON at all times.
Receive Data	This LED will come ON whenever characters are received through the phone line.
Transmit Data	This LED will come ON whenever the modem sends characters out the phone line.
Power LED	**Normal Indication**: This LED will be ON when power is applied to the modem. **Additional States**: A "Slow" blink indicates an invalid configuration. A "Fast" blink indicates that a self-dial is in process or that the modem is in "Configure Self-dialing Parameters' mode.

Note: The RD and TD LEDs indicate the flow of characters in and out of the phone line interface of the modem, and are not directly connected to the RS232 port.

Reconnecting Serial Cables

It is important to cycle (remove and then reapply) DC power to a modem each time the RS232 cable is disconnected and then reconnected. The serial port of the modem may not function properly if power is not cycled.

Resetting the modem

If it ever becomes necessary to completely reset the modem including both user profiles to the basic factory default settings, the following command can be issued:

AT&F&W&W1 [CR]

This command string will load the factory defaults into the active configuration (&F) and then save those settings into both user profile 0 (&W) and user profile 1 (&W1).

Note that after the modem is reset completely to the factory defaults, it will no longer be set to auto-answer, which is often necessary for the modem to work when connected to a remote device. Use the Setup Wizard to adjust these settings appropriately.

Section 9 Product Support and Additional Documents

FCC Requirements for Consumer Products

The Federal Communications Commission (FCC) has established rules, which permit this device to be directly connected to the telephone network. Standardized jacks are used for these connections. This equipment should not be used on party lines or coin lines.

If this device is malfunctioning, it may also be causing harm to the telephone network; this device should be disconnected until the source of the problem can be determined and until repair has been made. If this is not done, the telephone company may temporarily disconnect service.

If you have problems with your telephone equipment after installing this device, disconnect the device from the line to see if it is causing the problem. If it is, contact your supplier or an authorized agent.

The telephone company may make changes in its technical operations and procedures; if such changes affect the compatibility or use of this device, the telephone company is required to give adequate notice of the changes.

If the telephone company requests information on what equipment is connected to their lines, inform them of:

A) The telephone number that it is connected to,
B) The Ringer Equivalence Number 0.3
C) The USOC jack required RJ11, and
D) The FCC Registration Number 34579-MD-E

Items (b) and (d) are indicated on the label. The ringer equivalence number (REN) is used to determine how many devices can be connected to your telephone line, In most areas, the sum of the RENs of all devices on any one line should not exceed five (5.0). If too many devices are attached, they may not ring properly.

In the event of equipment malfunction, all repairs should be performed by our Company or authorized agent. It is the responsibility of users requiring service to report the need for service to our company or one of our authorized agents.

Automation*Direct*.com
3505 Hutchinson Road
Cumming, GA 30040
Phone: (770) 844-4200

Certification Notice for Equipment Used in Canada

The Canadian Department of Communications label identifies certified equipment. This certification means the equipment meats certain telecommunications-network protective, operation, and safety requirements. The Department does not guarantee the equipment will operate to the users satisfaction.

Before installing this equipment, users should ensure that it is permissible to be connected to the facilities of the local telecommunications company. The equipment must also be installed using an acceptable method of connection. In some cases, the companies inside wiring associated with single-line individual service may be extended by means of a certified connector assembly (extension cord). The customer should be aware that compliance with the above conditions may not prevent degradation of service in some situations.

Repairs to certified equipment should be made by an authorized Canadian maintenance facility – in this case, your supplier. Any repairs or alterations made by the user to this equipment, or equipment malfunctions, may give the telecommunications company cause to request the user to disconnect the equipment.

Users should ensure for their own protection that the electrical ground connections of the power utility, telephone lines, and internal metallic water pipe system, if present, are connected together. The precaution may be particularly important in rural areas.

Caution:

Users should not attempt to make such connections themselves, but should contact the appropriate electric inspection authority, or electrician as appropriate.

The LOAD NUMBER (LN) assigned to each terminal device denotes the percentage of the total load to be connected to a telephone loop, which is used by the device to prevent overloading. The termination on a loop may consist of any combination of devices, subject only to the requirement that the total of the load numbers of all the devices does not exceed 100.

Federal Communications Commission And Canadian Department of Communications Radio Frequency Interference Statement

Class b Digital Device. This equipment has been tested and found to comply with the limits for a Class B computing device pursuant to Part 15 of the FCC Rules. These limits are designed to provide reasonable protection against harmful interference in a residential installation. However, there is no guarantee that interference will not occur in a particular installation. This equipment generates, uses, and can radiate radio frequency energy, and, if not installed and used in accordance with the instructions, may cause harmful interference to radio or telephone reception, which can be determined by turning the equipment on and off. The user is encouraged to try and correct the interference by one of the following measures:

- Reorient or relocate the receiving antenna.
- Increase the separation between the equipment and the receiver.
- Connect the equipment into an outlet on a different circuit from which the receiver is connected.
- Consult an experienced radio/TV technician for help.

Caution:

Changes or modifications not expressly approved by the party responsible for compliance could void the users authority to operate the equipment.

To meet FCC requirements, shielded cables and power cords are required to connect this device to a personal computer or other Class B device.

This digital apparatus does not exceed the Class B limits for radio noise emissions from digital apparatus set out in the Radio Interference Regulation of the Canadian Department of Communications.

Regulatory Notices

Any European Country:
The Industrial Modem is in conformity with relevant regulatory standards following the provisions of European Council Directives: 73/23/EEC (Low Voltage Directive) and 89/336/EEC amended by 92/31/EEC (EMC Directive).

The Industrial Modem has been approved in accordance with Council Decision 98/482/EC for pan-European single terminal connection to the public switched telephone network (PSTN). However, due to differences between the individual PSTNs provided in different countries, the approval does not, of itself, give an unconditional assurance of successful operation on every PSTN network termination point.

Australia:
The Industrial Modem shall be connected to the Telecommunication Network through a line cord, which meets the requirements of Australian Communications Authority (ACA) Technical Standard TS008. An Australian Approved Power Supply or AC Adapter shall be utilized with the product.

AS/NZS3548:1995-
WARNING: This is a Class A product. In a domestic environment, this product may cause radio interference, in which case the user may be required to take adequate action.

Germany:
Diese als Endeinrichtung vorgesehen und muss an ein TAE mit F-Kodierung angeschlossen werden.
are terminal equipment, which must be connected to the PSTN using an F-coded connector/plug.

IEC950:1991-
The Industrial Modem shall be connected to Telecommunications Network through a line cord approved by the necessary authorities of the country. The Industrial Modem shall be utilized with a power supply approved by the necessary authorities of the country.

United Kingdom:
The Industrial Modem is intended for direct connection to the analogue Public Switched Telecommunications Network and is approved for use within the United Kingdom with following features:
-Modem facility
-Auto calling facility
-Auto answering facility
-DTMF signaling

CAUTION: The analogue telecommunications interface of the modem is intended to be connected to Telecommunication Network Voltage (TNV) circuits, which may carry dangerous voltages. If it is subsequently desired to open the host equipment for any reason, the telephone cord must be disconnected prior to effecting access to any internal parts, which may carry telecommunication network voltages.

Service can be facilitated through our office at:

Automation*Direct*.com
3505 Hutchinson Road
Cumming, GA 30040
Phone: (770) 844-4200

PS5R Standard Series — Switching Power Supplies

The PS5R standard offers a sleek, compact, ergonomic design, worldwide approvals, and broad range of output capacities.

With UL 508 Listing, additional savings in space and cost can be realized as no derating is necessary.

Key features of the PS5R standard series include:

- No jumpers or dip switches
- Universal AC input (85 to 264 V AC), except 100W)
- DC compatible input (105 to 370V DC, except 100W)
- Unique spring-up, fingersafe terminals (ideal for ring lug terminated wire)
- DIN rail or panel mount
- Eight output capacities
- UL508 Listing
- CE marking according to both LVD and EMC
- Fused input
- Auto resetting output overcurrent protection
- Output voltage adjust (±10%)

Conforms to
EMC Directives EN50081-2 and EN50082-2.
LVD Directive: EN60529.
Certified to EN60950.
75W, 120W & 240W also conform to EN61000-3-2

UL 508 Listed
File # E177168

Cert. No.
BL980213332392

Specifications

Specifications	Part Numbers	5VDC output	PS5R-A05	PS5R-B05*	—	—		—		—
		12VDC output	PS5R-A12	PS5R-B12	PS5R-C12	—		—		—
		24VDC output	PS5R-A24	PS5R-B24	PS5R-C24	PS5R-D24	PS5R-Q24	PS5R-E24	PS5R-F24	PS5R-G24
	Output Capacity		7.5W	15W	30W	50W	75W	100W	120W	240W
	Input	Input Voltage (single-phase, 2-wire)	100 to 240VAC nominal (85 to 264V AC), 50/60Hz (47 to 63Hz) 110 to 340VDC nominal (105 to 370VDC)					100 to 120VAC, 50/60Hz 200 to 240VAC, 50/60Hz (jumper select-able) 240 to 370VDC	100 to 240VAC, 50/60Hz, 110 to 340VDC	
		Input Current (typical)	0.17A at 100VAC	0.3A at 100VAC	0.68A at 100VAC	1.15A at 100VAC	1.1A	2.5A at 100VAC 1.5A at 200VAC	1.8A	4A at 100VAC
		Internal Fuse Rating	2A	2A	3.15A	3.15A	3.15A	4A	4A	6.3A
		Inrush Current	50A maximum (at cold start at 200V AC)				70A maximum (at cold start at 230V AC)	50A maximum (at cold start at 200V AC)	70A maximum (at cold start at 230V AC)	
		Leakage Current (at no load)	0.75mA maximum (60Hz, measured in conformance with UL, CSA, VDE)							
		Typical Efficiency	69% at 5V 73% at 12V 75% at 24V	69% at 5V 75% at 12V 79% at 24V	75% at 12V 75% at 24V	79% at 24V	83% at 24V DC	85% at 24V	83% at 24V DC	83% at 24V
		Overvoltage Protection	Outputs turns off at 105% (typical)							
	Output	Voltage and Current Ratings	5V, 1.5A 12V, 0.6A 24V, 0.3A	5V, 2.5A 12V, 1.2A 24V, 0.6A	12V, 2.5A 24V, 1.3A	24V, 2.1A	24V, 3.1A	24V, 4.2A	24V, 5A	24V, 10A
		Voltage Adjustments	±10% (V.ADJ screw on top)							
		Output Holding Time	20ms minimum (at full rated input and output)							
		Rise Time	200ms maximum (at full rated input and output)							150ms max.
		Line Regulation	0.4% maximum							
		Load Regulation	1.5% maximum							
		Fluctuation due to Ambient Temperature Change	0.05% maximum							
		Ripple Voltage	2% peak to peak maximum (including noise)							
		Overload Protection	120% typical (Zener-limiting)		120% typical, auto reset					
	Operation Indicator		LED							
	Parallel Operation		PS5R-A	PS5R-B	PS5R-C	PS5R-D	PS5R-Q	PS5R-E	PS5R-F	PS5R-G
			No				Yes			
	Dielectric Strength		Between input and output terminals: 3,000V AC, 1 minute Between input terminals and housing: 2,000V AC, 1 minute Between output terminal and housing: 500V AC, 1 minute							
	Insulation Resistance		Between input and output terminals/input terminals and housing: 100MΩ minimum (500V DC megger)							
	Operating Temperature		–10 to +60°C (14° to 140°F) (see derating curves)							
	Storage Temperature		–30 to +85°C (-22° to 185°F)							
	Operating Humidity		20 to 90% relative humidity (no condensation)							
	Vibration Resistance		$45m/s^2$, 10 to 55Hz, 2 hours on each of 3 axes				10 to 50Hz, 0.75mm p-p, 2 hrs on each of 3 axes			
	Shock Resistance		$300m/s^2$(30G), 3 shocks in each of 6 directions							
	Approvals		Conforms to EMC Directives EN50081-2 & EN50082-2. LVD Directive EN60529 — Certified to EN60950. UL508 listed. UL, c-UL, TUV approved. CE marked. EN61000-3-2							
	Weight		150g	170g	360g	390g	800g	600g	1200g	2000g
	Termination		Spring-up, fingersafe terminals with captive M3.5 screws							
	IP protection		IP20 (finger safe)							
	Dimensions H x W x D (mm)		75 x 45 x 70	75 x 45 x95	75 x 90 x 95	75 x 90 x 95	120 x 85 x 140	75 x 145 x 95	120 x 115 x140	120 x 200x 140
	Dimensions H x W x D (inches)		2.95 x 1.77 x 2.76	2.95 x 1.77 x 3.74	2.95 x 3.54 x 3.74	2.95 x 3.54 x 3.74	4.72 x 3.35 x 5.52"	2.95 x 5.71 x 3.74"	4.72 x 4.53 x 5.52	4.72 x 7.87 x 5.51

1. *For dimensional drawings, see page L-13.*
2. *For usage instructions, see page L-11.*
3. **12.5W for 5VDC model.*

Part Number Guide

Part Numbering Guide

PS5R – ① **A** (Wattage) ② **12** (Output Voltage)

Part Number Codes

Description		Code
① Wattage	7.5W	A
	15W (12.5W for 5VDC models)	B
	30W	C
	50W	D
	75W	Q
	100W	E
	120W	F
	240W	G
② Output Voltage	5VDC	05 (A and B models only)
	12V DC	12 (A, B, C models only)
	24V DC	24 all models

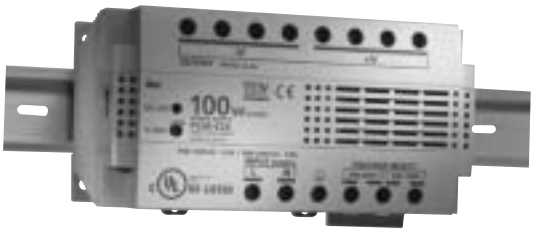

Part Number List

Part Numbers: PS5R Series

Output Capacity	Output Voltage	Input Voltage	Part Number
7.5W	5V DC	100 to 240VAC/ (110 to 340 VDC)	PS5R-A05
	12V DC		PS5R-A12
	24V DC		PS5R-A24
15W*	5V DC	100 to 240VAC/ (110 to 340 VDC)	PS5R-B05
	12V DC		PS5R-B12
	24V DC		PS5R-B24
30W	12V DC	100 to 240VAC/ (110 to 340 VDC)	PS5R-C12
	24V DC		PS5R-C24
50W	24V DC	100 to 240VAC/ (110 to 340 VDC)	PS5R-D24
75W	24VDC	100 to 240VAC/ (110 to 340 VDC)	PS5R-Q24
100W	24V DC	100 to 120 VAC 200 to 240 VAC (240-370 VDC)	PS5R-E24
120W	24V DC	100 to 240VAC/ (110 to 340 VDC)	PS5R-F24
240W	24V DC	100-240VAC (110-340VDC)	PS5R-G24

1. *For dimensional drawings, see page L-13.*
2. *For usage instructions, see page L-11.*
3. *For accessories, see page L-11.*
4. **12.5W for 5VDC models.*

Accessories

Part Numbers: PS5R Accessories

Appearance	Description	Part Number
	DIN rail (1000mm)	BNDN1000
	DIN rail clip	BNL5

Installation Instructions

Time-Saving Spring-up Terminals

The innovative terminals on the PS5R series use a special, spring-loaded screw. This makes installation as easy as pushing down and turning with a screwdriver. Installation time is cut in half since the screws do not need to be backed out to install wiring. The screws are held captive once installed and are 100% finger-safe. Screw terminals accept bare wire or ring or fork connectors.

1. Insert the wire connector into the slot on the side of the power supply.
2. Using a Phillips screwdriver, push down and turn the screw.

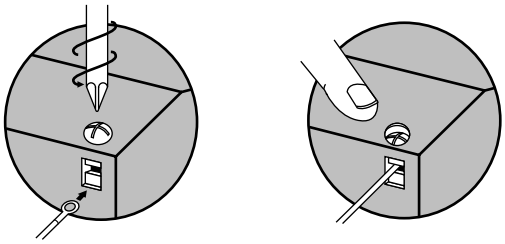

The wire is now connected, and the screw terminal is finger-safe!

Front Panel (terminals)

Terminal	Name	Description
V. ADJ	Voltage adjustment	Adjusts within ±10%; turn clockwise to increase output voltage
DC ON	Operation indicator	Green LED is lit when output voltage is on
+V, –V	DC output terminals	+V: Positive output terminal –V: Negative output terminal
⏚	Frame ground	Ground this terminal to reduce high-frequency currents caused by switching
L, N	Input terminals	Accept a wide range of voltages and frequencies (no polarity at DC input)
NC	No con-nection	Do *not* insert wires here, as this may damage the power supply

Overcurrent Protection Characteristics

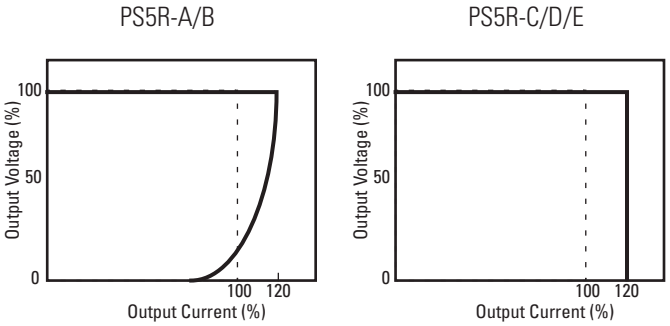

Parallel Operation

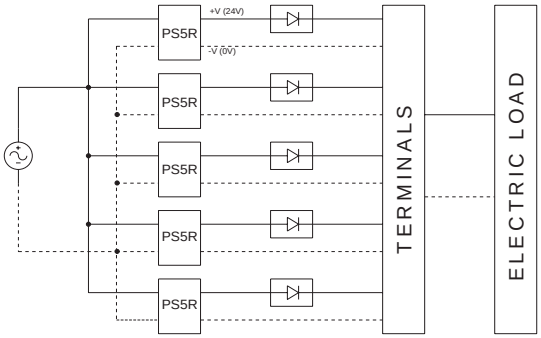

Parallel operation only recommended for PS5R-E24, Q24, F24 and PS5R-G24.

L

Power Supplies

Temperature Derating Curves

PS5R-A/B

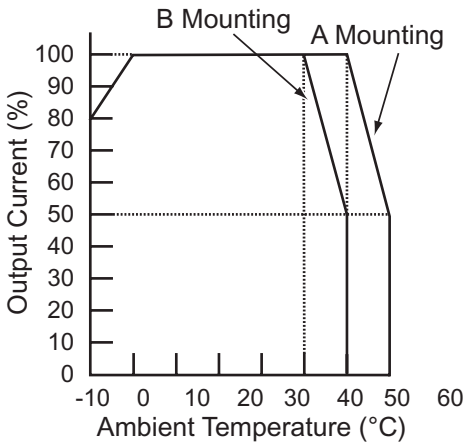

PS5R-C/D

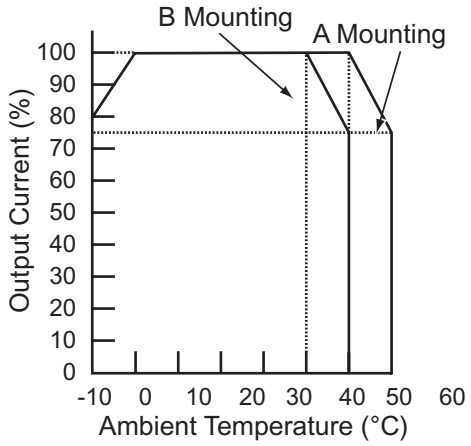

PS5R-E

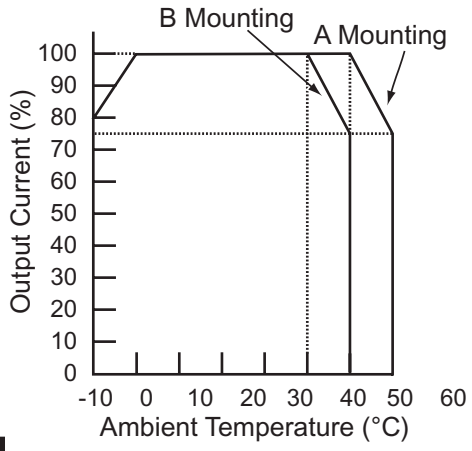

PS5R-Q

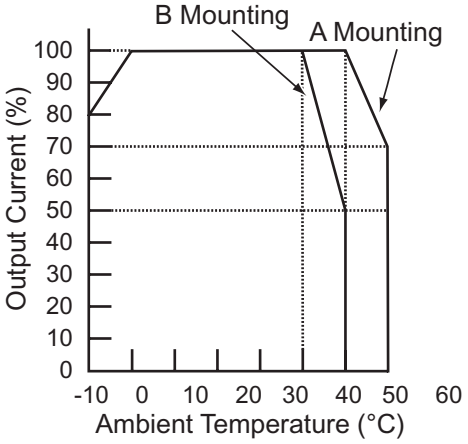

PS5R-F/G

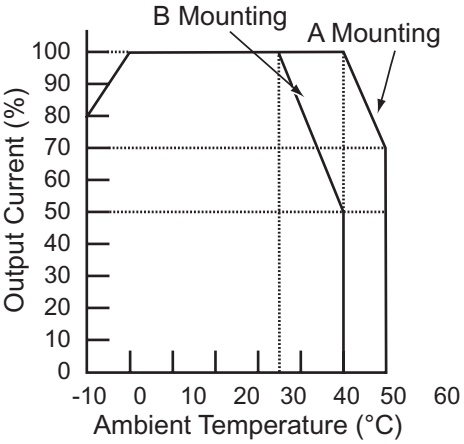

A Mounting

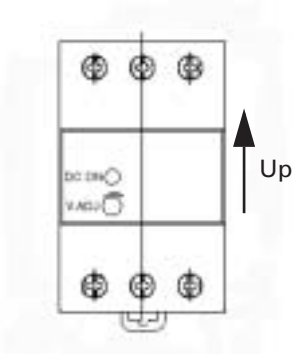

B Mounting

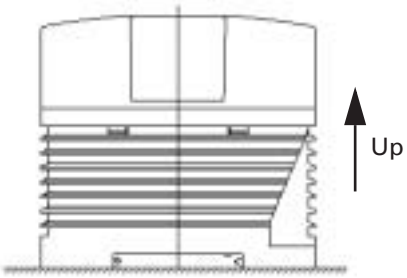

Dimensions

PS5R-A 7.5W (depth 70mm)

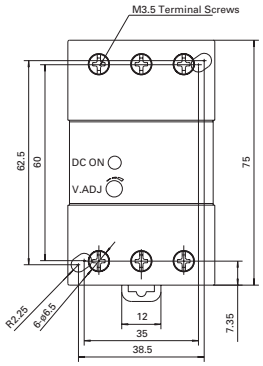

PS5R-B 15W (depth 95mm)

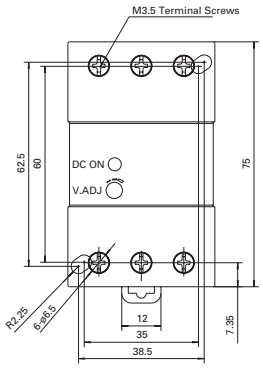

PS5R-C 30W (depth 95mm)

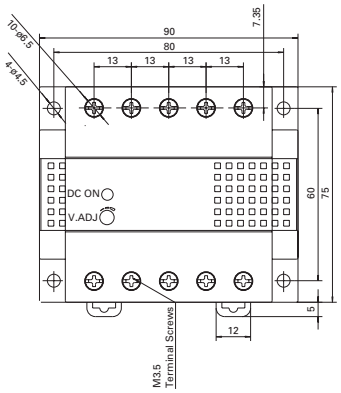

PS5R-D 50W (depth 95mm)

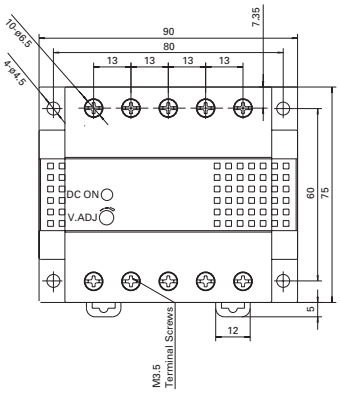

PS5R-Q 75W (depth 140mm)

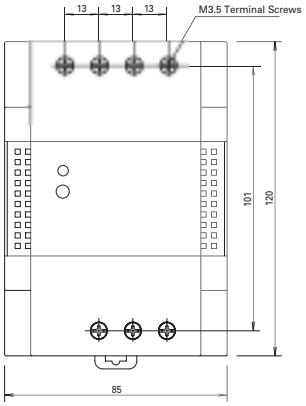

PS5R-E 100W (depth 95mm)

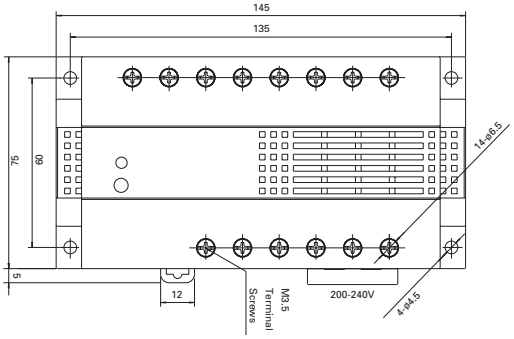

PS5R-F 120W (depth 140mm)

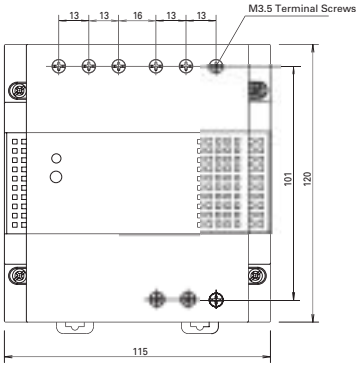

PS5R-G 240W (depth 140mm)

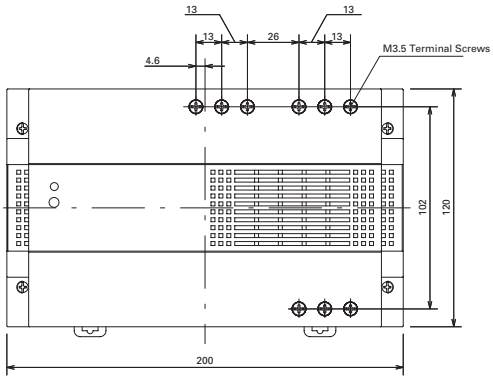

L

Power Supplies

SWITCHING POWER SUPPLY
INSTRUCTION SHEET
PS5R Series

IDEC IZUMI CORPORATION

●Before operating the switching power supply, read this instruction sheet and keep it for future reference.

1. Safety Standard Conditions

Applicable standard : UL 508, CSA C22.2 No. 14, EN 60950
Pollution degree : 2
Leakage current : 0.75 mA Max.

2. Type No. Development

PS5R－□□
① ②

① : Output Power　　② : Output Voltage
E : 100W　　24: 24V DC

3. Rating

Use the switching power supply with the output capacity within the values shown below.

PS5R-E□

Input : 100-120V AC, 2.5A／200-240V AC, 1.5A, 50-60Hz

Output :

Type	Output Voltage V DC	Output Current Max. A	Output Capacity Max. W
24	21.6–26.4	4.2	100.8

4. Output Derating

PS5R-E□

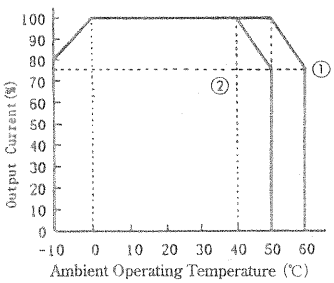

①: Mounting A
②: Mounting B

Note: In order to comply with UL 508 (EN 60950) standards.
The ambient operating temperature is as follows.

Type No.	Ambient Operating Temperature UL508(EN60950) (℃)	
	① : Mounting A	② : Mounting B
PS5R-E□	50 (50)	40 (35)

(Mounting Direction)

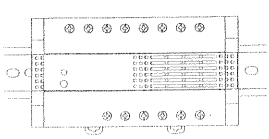

Mounting A

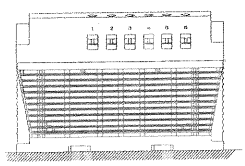

Mounting B

Mounting A : Standard Mounting on Vertical Plane
Mounting B : Mounting on horizontal Plane

5. Terminal Marking and Description

① (L) AC Input Terminal
② (N) AC Input Terminal
③ (⏚) Ground Terminal (Protective Earthing Terminal)
④ (－V) DC Output Terminal
⑤ (＋V) DC Output Terminal
⑥ (V. A D J) Output Voltage Adjustment
⑦ (D C O N) Operation Indicator
⑧ (VOLTAGE SELECT) Voltage Select Terminals

P S 5 R－E□

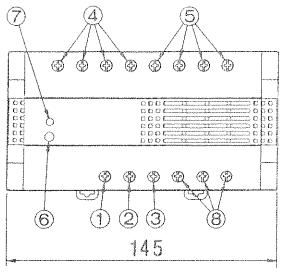

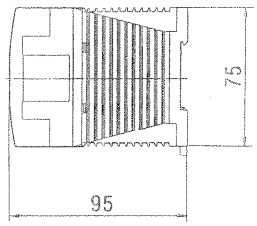

6. Power Supply Installation

① Make sure of convection in consideration of sufficient heat radiation.
②Keep at least 10mm clearance around the switching power supply.
③When the derating is in question provide forced air－cooling.
④Use minimum 60℃ wire.
⑤Terminal torque 0.8 N・m.
⑥Use copper wire only.
⑦When mounting the switching power supply directly on a panel surface, see the mounting hole layout shown below.

PS5R-E□
Mounting Hole Layout

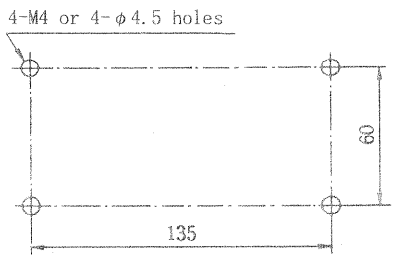

⑧Mounting on 35-mm-wide DIN Rail

〈Mounting on DIN Rail〉
(1)Fasten the DIN Rail to a panel firmly.
(2)Pull the clamp out from the switching power supply until the clamp clicks. Put the groove of the switching power supply on the DIN Rail, with the output terminal side up, press the switching power supply to the panel, and push the clamp in until the clamp clicks.
(3)Use BNL5P mounting clips on both the sides of the switching power supply to prevent from moving sideways.

〈Removing from DIN Rail〉
Insert a flat screwdriver into the slot in the clamp. Pull the clamp out until the clamp clicks, and turn the switching power supply bottom out.

〈Mounting〉　　〈Removing〉

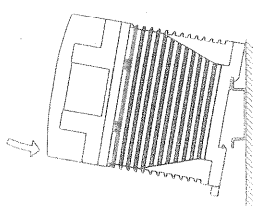

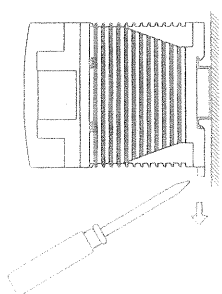

⑨Adjusting the Output Voltage

The output voltage canbe adjusted within±10% of the rated output voltage using the V.ADJ(output voltage adjustment). Note that the overvoltage protection may work when the output voltage is raised.

⑩Overcurrent Protection

When an overcurrent flows due to an overload,the output voltage dorps. When the load is reduced to a normal level, the normal output voltage is restored. Note that an overload or short-circuit condition continuing for an extended period of time will deteriorate or damage internal elements.

⑪Overvoltage Protection

These models use a manual reset method after power shutdown. To recover from output voltage drop due to an overvoltage, turn off the AC input,and turn on the AC input after approximately 1 minute.

⑫Series Operation

Two PS5R switching power supplies can be connected in series.When connecting the switching power supplies in series,inserta schottky diode in the output line of each switching power supply.

⑬Parallel Operation

PS5R switching power supplies cannot be connected in parallel.If connected in parallel,internal elements and loads may bedamaged.

⑭Insulation Resistance and Dielectric Strength Tests

When making these tests,connect the AC input terminals togetherand the output + and - terminals together.Rapid applicationand interruption of the test voltage will generate a surge voltage,which may damage the switching power supply.

7. Selecting Input Voltage

The PS5R-E can accept input of 100-120VAC and 200-240VAC by connecting appropriate VOLTAGE SELECT terminals with a jumper as shown below.
Make sure of correct jumper position before connecting the input.
The jumper is set 200-240VAC input before shipment at factory.

For 100-120VAC input

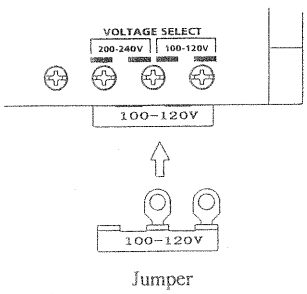

Jumper

For 200-240VAC input

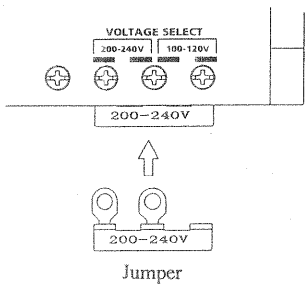

Jumper

SAFETY PRECAUTIONS

- Read the following safety precautions to make sure of correct operation before starting installation, wiring, and operation.
- In this instruction sheet, safety precautions are categorized in order of importance to Warning and Caution:

⚠ WARNING ···Warning notices are used to emphasize that improper operation may cause severe personal injury or death.

⚠ WARNING

- Do not use the switching power supply on control equipments in aircrafts, trains, and atomic equipments where malfunction of the switching power supply may cause severe personal injury or threaten human life. These switching power supplies are designed for use on general electronic equipment such as office equipment, communication equipment, instrumentation equipment, and industrial control equipment. The power supply is a unit of Class A. This means, that they can be used in all establishments other than domestic and those directly connected to a low voltage power supply network which supplies building used for domestic purposes.
- Make sure that the operating conditions satisfy the values described in the catalog. Comfirm the specification values before designing the equipment to use the switching power supply and before supplying power, Contact IDEC if you have any question.
- Do not modify or repair the switching power supply. Modification or repairing of the switching power supply by users may cause electrical shocks, damage, fire hazards, and other heavy accidents.
- Do not install the switching power supply where a human body may come into contact while power is supplied to the switching power supply. Do not touch the switching power supply during operation or immediately after turning off because some parts are heated and at a high voltage, causing burns or electrical shocks. The standard switching power supplies are designed for installation in equipment.
- Do not connect the output terminals or output lead wire together. Fire hazards or damage may result.
- Include a protection in the equipment using the switching power supply in consideration of malfunction or damage of the load in case the switching power supply should fail. If the switching power supply should fail, a very high voltage or voltage drop may occur at the output terminals.
- Turn power off before wiring the switching power supply. Make sure of correct wiring. Incorrect wiring may cause electrical shocks or damage.

⚠ CAUTION ···Caution notices are used where inattention might cause personal injury or damage to equipment.

⚠ CAUTION

- Make sure of the correct input voltage. Incorrect input voltage may cause blown fuses, fuming, or fire hazards. Make sure of correct polarity of input and output terminals before supplying power to the switching power supply.
- Do not touch any part inside the switching power supply. Prevent foreign objects from entering into the housing of the switching power supply. If the internal parts are touched by hand, or foreign objects such as paper clips or screws enters into the housing, accidents or damage may occur.
- Observe the temperature derating. The operating temperature is the temperature around the switching power supply. Use the switching power supply within the temperature derating curve. Otherwise, the internal temperature will rise and damage may be caused.
- Do not turn the output voltage adjustment beyond the limits. Otherwise, the switching power supply may be deteriorated and damage may be caused.
- When damage or malfunction should occur during operation, immediately turn power off and stop the switching power supply. Contact IDEC.
- Do not use or store the switchig power supply in environments subjected to a large amount of vibrations or shocks. Otherwise, damage may be caused.
- Do not install the switching power supply in environments exposed to direct sunlight, iron particles, oil splashes, chemicals, and hydrogen sulfide. Do not use the switching power supply in humid places such as basements or greenhouses, or in low-temperature places such as in freezers or in front of cooler outlet.

Please see enclosed CD for the following manuals for your D2-260 PROGRAMMABLE LOGIC CONTROLLER.

Manual No.	Contents
D2-USER-M	DL205 User Manual
D2-ANLG-M	DL205 Analog I/O Modules

Surge Protection Devices

Class 6671

Merlin Gerin
Modicon
Square D
Telemecanique
Schneider Electric Brands

CONTENTS

Description	Page
Whole House Surge Protector	3
Secondary Surge Arresters	7
Plug-on Surge Arresters	8
Hard-Wired Surge Arresters	10
Warranties	13

SQUARE D
Schneider Electric

SDSA1175
UL and cUL Listed 58J4 (TVSS)
File #E81066
UL and cUL Listed 60Y6 (SA)
File # E148456

SDSA3650
UL and cUL Listed 58J4 (TVSS)
File #E81066
UL and cUL Listed 60Y6 (SA)
File # E148456

QOSAMK
Surge Arrester
Mounting Kit

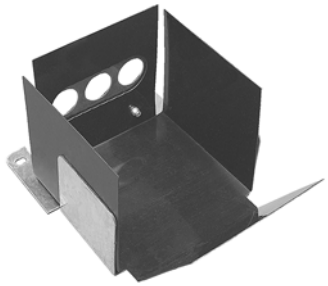

MMSAMK
Surge Arrester
Mounting Kit

PRODUCT DESCRIPTION

The SDSA1175 and SDSA3650 are UL and cUL Listed as TVSS and secondary surge arresters. The SDSA1175 is designed for use on 120/240 Vac, 50/60 Hz electrical services. Two of these devices can be used to protect 208Y/120 Vac three-phase, four-wire services. The SDSA3650 is designed to be used where maximum phase-to-ground system voltage does not exceed 600 Vac. The device may also be used for surge protection of irrigation pumps, oil pumps, and motors operating below 600 Vac.

NOTE: Do not use either the SDSA1175 or SDSA3650 on ungrounded systems.

Features

The SDSA1175 and the SDSA3650 secondary surge arresters offer the following distinctive features:

- UL and cUL Listed as TVSS and secondary surge arresters
- Meet ANSI/IEEE C62.11-1987
- Suitable for use in Category B and C locations
- Metal oxide varistor (MOV) design
- LED indicates operational status
- Fast response time (less than 50 nanoseconds)
- Maintenance-free, long life

Housing

The arrester housing is made of high temperature thermoplastic. The cover is permanently bonded to the housing by an ultrasonic welding process, and the wire exit is sealed using a polyamide resin adhesive. The arrester can be used for both indoor and outdoor applications.

MOV Technology

MOVs provide voltage surges with a low resistance path line-to-neutral while providing high resistance to the 50/60 Hz power source. Traditional gas tube arresters suffer from slow response time, high clamping voltages, and crowbarring effects (the reduction of voltages during conduction in order to short circuit the load). The MOV responds faster and has a lower clamping voltage because it does not have a gap structure.

Fuse Link

A non-replaceable internal fuse link opens in the event of a varistor-damaging overload.

LED Indicator

The LED on the face of the device indicates operational status of the arrester. If the light is on the device is fully operational. When the LED indicator goes off, the device should be replaced.

Available Mounting Kits

The SDSA1175 can be installed inside a QO or HOMELINE load center using the QOSAMK surge arrester mounting kit.

The SDSA1175 or SDSA3650 can be installed inside Square D Series M or later Multi-Metering Equipment (MP METER-PAK™ or EZ METER-PAK® Main Devices Series M__) using the MMSAMK surge arrester mounting kit.

Both surge arrester mounting kits are sold separately.

© 1997–2002 Schneider Electric All Rights Reserved

APPLICATION DATA

These secondary surge arresters are suitable for use in Category B and C locations. The threat at these locations is characterized by ANSI/IEEE C62.41-1991 as a 20,000 V potential and a 10,000 A current. The device clamps the voltage during surges while diverting transient current. Electronic equipment may need to be additionally protected at the point of use with transient voltage surge suppressors.

Electrical Characteristics

- Voltage rating:
  - — SDSA1175: 150 Vac maximum phase-to-ground at 50/60 Hz
    NOTE: Do not use on ungrounded systems.
  - — SDSA3650: 600 Vac maximum phase-to-ground at 50/60 Hz
    NOTE: Do not use on ungrounded systems.
- Typical clamping voltages: For 8/20µs combination wave surge current for each phase-to-ground with specified lead length:

	1 in. (25 mm) lead	3 in. (76 mm) lead	6 in. (152 mm) lead
SDSA1175			
1500 A surge current	500 V	550 V	575 V
5000 A surge current	625 V	675 A	725 A
10,000 A surge current	750 V	900 V	1075 V
SDSA3650			
1500 A surge current	1525 V	1750 V	1775 V
5000 A surge current	1700 V	2100 V	2125 V
10,000 A surge current	1925 V	2375 V	2400 V

	12 in. (305 mm) lead	18 in. (457 mm) lead
SDSA1175		
1500 A surge current	600 V	625 V
5000 A surge current	875 V	1050 V
10,000 A surge current	1250 V	1500 V
SDSA3650		
1500 A surge current	1800 V	1825 V
5000 A surge current	2325 V	2425 V
10,000 A surge current	2700 V	3000 V

Specifications

Electrical	
SPD response time	Less than 50 nanoseconds
Minimum life	2500 operations (for 1.5 kA 8/20µs wave for each line-to-ground)
Varistor surge current rating per phase	SDSA1175: 36,000 A peak (8/20µs wave) SDSA3650: 40,000 A peak (8/20µs wave)
Power consumption per phase	SDSA1175: Less than 500 milliwatts SDSA3650: Less than 600 milliwatts
Operating temperature range	-40 to +70 °C (-40 to +160 °F)
Surge energy capability per phase	SDSA1175: 560 Joules (8/20µs wave) SDSA3650: 2100 Joules (8/20µs wave)

© 1997–2002 Schneider Electric All Rights Reserved

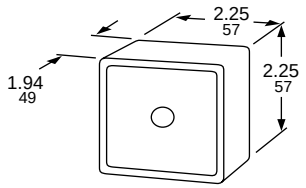

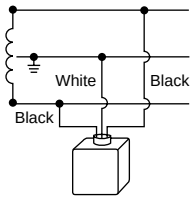

One SDSA1175 on
120/240 Vac Circuit

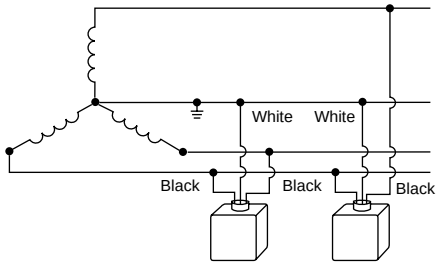

Two SDSA1175s on 208Y/120 Vac Circuit

NOTE: Systems shown must be solidly grounded.
Do not use on ungrounded systems.

SDSA1175

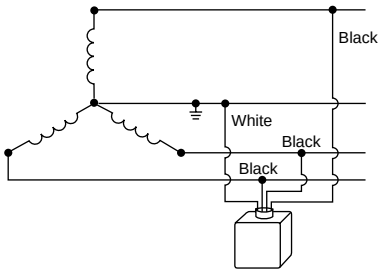

3ϕ4W
208Y/120Vac,
480Y/277Vac
and 600Y/347Vac

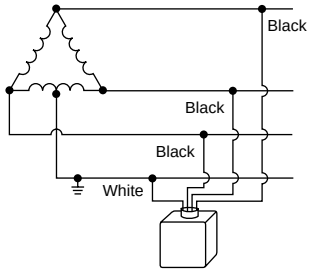

3ϕ4W
240/120Vac

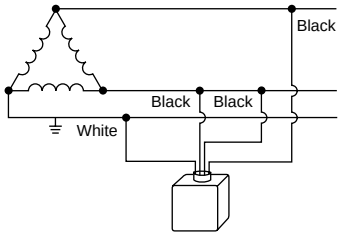

3ϕ3W
(Grounded B Phase)
240Vac and 480Vac

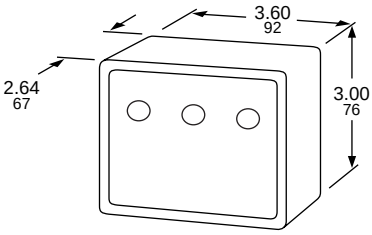

NOTE: Systems shown must be solidly grounded.
Do not use on ungrounded systems.

SDSA3650

© 1997–2002 Schneider Electric All Rights Reserved

Square D Company
1601 Mercer Road
Lexington, KY 40511 USA
1-888-SquareD
(1-888-778-2733)
www.SquareD.com

Schneider Canada Inc.
19 Waterman Avenue,
M4B 1 Y2
Toronto, Ontario
1-800-565-6699
www.schneider-electric.ca

Catalog No. 6671CT9701R2/02 March 2002 © 1997–2002 Schneider Electric All Rights Reserved
Replaces 6671CT9701R8/01 dated 10/01.

299-401-11 Rev. -

SurgeFree™

MODELS

400 Series

Equipment Level Protection

The 400 Series installed at or within a piece of equipment (PLCs, fire alarm monitoring systems, security controls, etc.) provides compact, heavy-duty surge suppression. Now with touch-safe terminal blocks, the units offer an elevated level of personnel protection. Employing a sophisticated combination of brute force surge protection and EMI/RFI filtering, they will prevent damage or malfunction to sensitive equipment. The 400 Series comes with a no-nonsense, twenty-year warranty.

DIN Rail Available

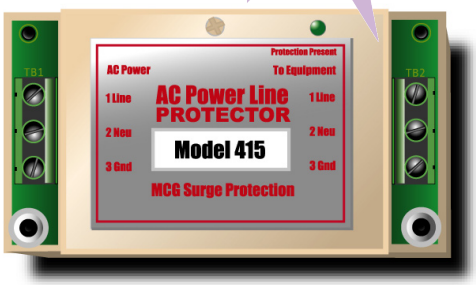

20-Year Warranty

Model	407	415	416	417
Rated Voltage (50/60Hz)	120VAC	120VAC	120VAC	240VAC
Rated Current (rms.) @25°C	15A	15A	23A	23A
Service (Phase)	1	1	1	1
Surge Current in kA (8/20µs)	10	10	10	10
Clamp Voltage (1mA DC)	270V	270V	270V	500V
UL1449 3rd Ed. VPR (L-N):	500V	500V	500V	900V
UL1449 3rd Ed. VPR (L-G):	600V	600V	600V	1000V
UL1449 3rd Ed. VPR (N-G):	600V	600V	600V	1000V
Surge Energy (Joules) 8/20µs	1460	1140	1140	2300
Filter Attenuation (50 ohm) : -20db	30 kHz	30 kHz	30 kHz	30 kHz
-40db	300 kHz	300 kHz	300 kHz	260 kHz
-60db	1.4 MHz	1.4 MHz	1.0 MHz	700 kHz

SPD Type:	Type 4 for use in Type 2 applications
I_n:	3kA
Max. Continuous Operating VAC (MCOV):	115% Rated Line Voltage
Varistor MCOV:	150% (407/415/416); 130% (417) Rated Line Voltage
SCCR:	5kA AIC (with external encl. and OCP)
Response Time:	<5 Nanoseconds
Modes of Protection:	L-N, L-G, N-G
Surge Current (L-N, 8/20µs):	1 Event: 10kA, 100 Events: 2kA, 1000 Events: 1kA,10,000 Events: 500A
Status Indicators:	Green LED
Wire Gauge Range:	26-10 AWG (0.13-5.27mm^2)
Operating Altitude:	13,000 ft. (4000m)
Temp. (Operating/Storage):	-40° to +70°C/-40° to +85°C
Enclosure:	High Impact Plastic
Dimensions:	4.95" x 2.85" x 1.25" (126 x 73 x 32mm)
Mounting:	4.20" x 2.25"/.185 ID - 4 holes (107 x 57mm/4.7mm)
Connection:	Screw Clamp Terminal Blocks
Screw Torque Max.	5.3in. lbs./0.6Nm
Weight:	<1 lb., (.45kg)
UL File Number:	E322161
Certification:	UL1449 3rd. Ed. Recognized Component

MADE IN THE USA

MCG Surge Protection • Toll Free: 1-800-851-1508 • www.mcgsurge.com • E-Mail: info1@mcgsurge.com
12 Burt Drive, Deer Park, New York 11729, USA • Telephone: (631) 586-5125 • Fax: (631) 586-5120

MCG SURGE PROTECTION http://www.mcgsurge.com

12 Burt Drive, Deer Park, New York 11729 USA Phone: 1-631-586-5125 Fax: 1-631-586-5120
Toll Free: 1-800-851-1508
info1@mcgsurge.com

29950010A

400 Series

Surge Protective Device
For Installation within OEM Equipment

1.0 GENERAL

1.1 DESCRIPTION

These specifications describe the electrical and mechanical requirements for a series installed AC power line SPD (Surge Protective Device). The specified SPD shall provide effective energy surge diversion for application in ANSI/IEEE C62.41-2002 Location Category A3 environments. Testing per ANSI/IEEE C62.45-2002 using ANSI/IEEE C62.41 Category A3 waveforms and amplitudes. UL1449 3rd Ed. recognized. The specified surge protective device shall provide:

- 10,000 transient amps per mode minimum.
- L-N, L-G, N-G protected modes.
- Green protection present LED.
- EMI/RFI filter.
- Low profile construction.
- Cage clamp, touch safe terminal blocks.
- Twenty year warranty.

1.2 STANDARDS

The specified suppressor shall be designed, manufactured, tested and installed in compliance with:

- American National Standards Institute and Institute of Electrical and Electronic Engineers (ANSI/IEEE C62.11, C62.41, and C62.45)
- Federal Information Processing Standards Publication 94 (FIPS PUB 94)
- National Fire Protection Association (NFPA 20, 70, 75 and 78)
- Underwriters Laboratories (UL1449 3rd Edition Recognized)
- CAN/C22.2 No. 8-M1986; CSA Electrical Certification Notice No. 516

The system individual units shall be UL recognized under UL1449 3rd Edition Standard for Safety for Surge Protective Devices (SPD). Protector shall be **Type 4 for use in Type 2** applications.

1.3 LOCAL EQUIPMENT ELECTRICAL REQUIREMENTS

1.3.1 Environmental Requirements:

A. Operating Temperature: Operating temperature range shall be -40 to +71 degrees C(-40 to +160 degrees F).

B. Storage Temperature: Storage temperature range shall be -40 to +85 degrees C.

12 Burt Drive, Deer Park, New York 11729 USA
Phone: 1-631-586-5125 Fax: 1-631-586-5120
Toll Free: 1-800-851-1508
info1@mcgsurge.com

C. Relative Humidity: Operation shall be reliable in an environment with 0% to 95% non-condensing relative humidity.

D. Operating Altitude: The system shall be capable of operation up to an altitude of 13,000 feet above sea level.

E. Operating Voltage: Maximum continuous operating voltage (MCOV) for varistors shall be no less than 125% of the nominal rated line voltage. UL1449 3rd Edition defined MCOV shall be no less than 115% nominal line voltage.

F. Power Frequency: The power frequency range shall be 47-63 Hertz.

1.3.2 Electrical Requirements:

A. Unit Electrical Specifications: See Table 1.0.

B. Nominal System Operating Voltage shall be:

_____ VAC, 1 Phase, 2 Wire plus Ground, _____ A RMS (continuous)

Table 1.0

Model	Voltage	Service/Rated Current	Joules Total (8/20us)	UL1449 3rd Edition VPR			Nominal Discharge Current (In)	SCCR
407	120VAC	1PH, 2W+G, 15A RMS	1,460	500V L-N	600V L-G	600V N-G	3kA	5kA AIC
415	120VAC	1PH, 2W+G, 15A RMS	1,140	500V L-N	600V L-G	600V N-G	3kA	5kA AIC
416	120VAC	1PH, 2W+G, 23A RMS	1,140	500V L-N	600V L-G	600V N-G	3kA	5kA AIC
417	240VAC	1PH, 2W+G, 23A RMS	2,300	900V L-N	1000V L-G	1000V N-G	3kA	5kA AIC

C. Unit shall be installed in series with the protected equipment.

D. The maximum surge current capacity per phase of the specified system, based on the standard IEEE 8/20 microsecond waveform, shall be at least: 1 Event at 10 kA. The surge life (8/20us) shall be at least 10,000 occurrences @ 500A. The transient suppression capability shall be bi-directional and suppress both positive and negative impulses.

E. The suppressor shall be designed so as to minimize the internal surge path impedance. Direct point-to-point internal wiring is inherently inductive and not acceptable. Connection to the power service shall be constructed as shown in the installation notes for best performance.

F. Equipment shall be as manufactured by MCG Surge Protection; Model: 400 Series or engineering department approved equal with supporting test data.

G. The suppressor shall contain a common mode noise filter with specifications as in **Table 1.1**.

12 Burt Drive, Deer Park, New York 11729 USA
Phone: 1-631-586-5125 Fax: 1-631-586-5120
Toll Free: 1-800-851-1508
info1@mcgsurge.com

Table 1.1

Filter attenuation(50 ohm)		407	415	416	417
-20db		30 kHz	30 kHz	30 kHz	30 kHz
-30db		90 kHz	90 kHz	90 kHz	80 kHz
-40db		300 kHz	300 kHz	300 kHz	260 kHz
-50db		880 kHz	880 kHz	800 kHz	530 kHz
-60db		1.4 MHz	1.4 MHz	1.0 MHz	700 kHz

2.0 EQUIPMENT LEVEL PROTECTION SYSTEM COMPONENTS

A. MOV (metal oxide varistors): The suppressor shall be constructed of multiple 20mm (10kA (8 x 20 microsecond) pulse rating min. each) metal oxide varistors.

B. Self-Diagnostics: An illuminated green solid state LED indicator shall be provided on the front cover to indicate protection is present at the device.

C. Connection: Cage clamp, touch safe terminal block. Wire gauge range: 26-10 AWG

D. Enclosure: High-impact plastic.

E. Dimensions: 4.95” x 2.85” x 1.10”

F. Shipping weight: <1lb.

3.0 INSTALLATION AND MAINTENANCE

A. The unit shall be installed in accordance with the manufacturer's printed instruction to maintain warranty. All local and national codes must be observed.

B. Units shall be installed within the equipment to which it is connected.

4.0 TWENTY YEAR WARRANTY

Manufacturer to provide 20 year warranty to cover repair or replacement with a new device.

MCG Surge Protection

Models 405, 407, 415, 416 & 417 Installation Instructions

The 400 Series are installed at the equipment level where limited space is a concern. These in-line series devices provide both brute force surge protection and impulse filtering to prevent equipment damage.

Model	405§	407*	415*	416**	417**
Rated Voltage (50/60Hz)	120VAC	120VAC	120VAC	120VAC	240VAC
Rated Current (rms) @ 40ºC	5A	15A	15A	23A	23A
Service	1ϕ, N+G	1ϕ, N+G	1ϕ, N+G	1ϕ, N+G	1ϕ, N+G
Minimum Wire Size (AWG)	16	14	14	10	10

Suitable for use on a circuit capable of delivering not more than 5000 rms symmetrical Amperes. Use appropriate upstream fuse (customer supplied.)

1. AC power must be off. For indoor use only. Never install during a lightning storm.
2. Using insulated wire connect power source to line side of protector as follows.
3. Connect your phase wire to line (L) position on TB1 and tighten screw.
4. Connect your neutral wire to (N) position on TB1 and tighten screw.
5. Bring your ground wire to the (G) position on TB1 and tighten screw.
6. Using insulated wire connect load side of protector to equipment.
7. Connect your phase wire to load position (L) on TB2 and tighten screw.
8. Connect your neutral wire to load position (N) on TB2 and tighten screw.
9. Connect your ground wire (must be 6" or less) to load position (G) on TB2 and make sure this is referenced to chassis ground of protected equipment.
10. Turn on AC power. Lit Green LED indicates device is powered and protection is present.

*** Littelfuse Cat. No. 326020**

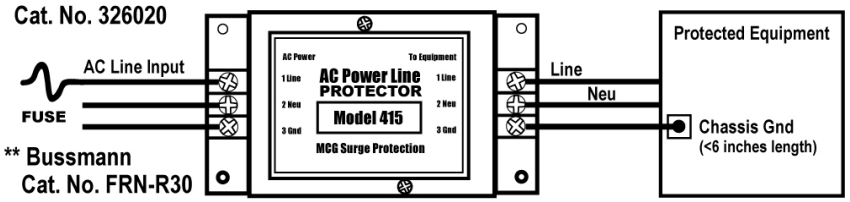

**** Bussmann Cat. No. FRN-R30**

§ **Littelfuse Cat. No. 326015**

Web: www.mcgsurge.com • E-Mail: info1@mcgsurge.com
12 Burt Drive, Deer Park, New York 11729 • Phone: 1-800-851-1508 • Fax: (631) 586-5120

Lit. Product No. 299-600-28C

MCG Surge Protection

Models 405, 407, 415, 416 & 417 Installation Instructions

The 400 Series are installed at the equipment level where limited space is a concern. These in-line series devices provide both brute force surge protection and impulse filtering to prevent equipment damage.

Model	405§	407*	415*	416**	417**
Rated Voltage (50/60Hz)	120VAC	120VAC	120VAC	120VAC	240VAC
Rated Current (rms) @ 40ºC	5A	15A	15A	23A	23A
Service	1ϕ, N+G	1ϕ, N+G	1ϕ, N+G	1ϕ, N+G	1ϕ, N+G
Minimum Wire Size (AWG)	16	14	14	10	10

Suitable for use on a circuit capable of delivering not more than 5000 rms symmetrical Amperes. Use appropriate upstream fuse (customer supplied.)

1. AC power must be off. For indoor use only. Never install during a lightning storm.
2. Using insulated wire connect power source to line side of protector as follows.
3. Connect your phase wire to line (L) position on TB1 and tighten screw.
4. Connect your neutral wire to (N) position on TB1 and tighten screw.
5. Bring your ground wire to the (G) position on TB1 and tighten screw.
6. Using insulated wire connect load side of protector to equipment.
7. Connect your phase wire to load position (L) on TB2 and tighten screw.
8. Connect your neutral wire to load position (N) on TB2 and tighten screw.
9. Connect your ground wire (must be 6" or less) to load position (G) on TB2 and make sure this is referenced to chassis ground of protected equipment.
10. Turn on AC power. Lit Green LED indicates device is powered and protection is present.

*** Littelfuse Cat. No. 326020**

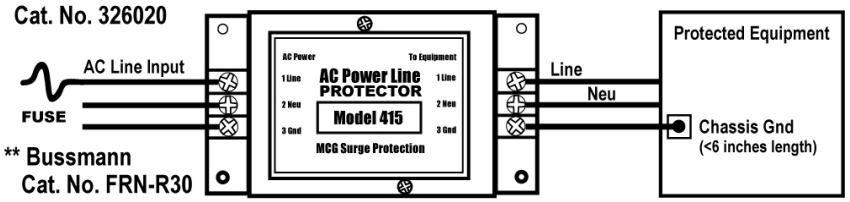

**** Bussmann Cat. No. FRN-R30**

§ **Littelfuse Cat. No. 326015**

Web: www.mcgsurge.com • E-Mail: info1@mcgsurge.com
12 Burt Drive, Deer Park, New York 11729 • Phone: 1-800-851-1508 • Fax: (631) 586-5120

299-400-38 Rev. B

DC Protector

MODEL

MCG-12A, 24A, 32A , 48A & 130A

Direct Current Equipment Level Protection

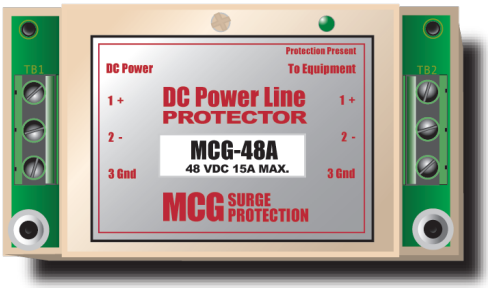

The DC Protector installed at or within equipment such as DC servo mechanisms, fire alarm monitoring systems, security sys tem controls, etc. provides compact, heavy-duty surge suppression.

The units employ brute force surge protection to prevent damage or malfunction to sensitive equipment from lightning, switching transients and momentary power supply overvoltages. Reaction time is less than five nanoseconds with automatic reset after the transient has passed.

Designed to protect up to 15A of continuous DC load current when connected in series mode, the DC Protector will support higher load current ratings when optionally shunt installed. Bi-directional all-mode protection means that all potential surge and transient paths are fully covered.

20-Year Warranty

FEATURES

- Compact Size - Space efficient and easy to install, the DC Protector offers quick, hard-wired installation in locations where space is limited.
- Maximum Surge Protection - Large absorption capability, up to 278j.
- Fast Clamp Response - Currents are intercepted and safely diverted in less than 5 nanoseconds.
- Automatic Reset - The unit automatically resets after an overvoltage transient condition has occured. A green LED gives verification that the unit is operational and full protection is present.
- All Mode Protection - positive to negative, positive to ground, negative to ground.

Maximum continuous operating VDC:	125% rated voltage
Response time:	<5 nanoseconds
Surge current (8/20µs): 1 Event: 4kA	4kA
10,000 Events: 300A	300A
Power present indicator:	Green LED
Operating altitude:	13,000 ft. (4000m)
Temperature (Operating):	-40° to +55°C
Temperature (Storage):	-40° to +85°C
Enclosure:	High-impact Plastic
Dimensions:	Dimensions: 4.95” x 2.85” x 1.25”
Mounting:	Mounting: 4.20” x 2.25”/0.185 ID - 4 holes
Connection:	Touch-Safe terminals

MCG Surge Protection • Toll Free: 1-800-851-1508 • www.mcgsurge.com • E-Mail: info@mcgsurge.com
12 Burt Drive, Deer Park, New York 11729, USA • Telephone: (631) 586-5125 • Fax: (631) 586-5120

Specifications

Direct Current Protection

Model	Rated Voltage (DC +/-15%)	Rated Current (rms@40 C	Service	Clamp Voltage (1mA)peak	Surge Energy (joues), 10/1000us	Typical Suppression Voltage @50A (8/20)
MCG-12A	12VDC	15A	+ / - / GND	18V	66j	34V
MCG-24A	24VDC	15A	+ / - / GND	33V	138j	53V
MCG-32A	32VDC	15A	+ / - / GND	47V	198j	84V
MCG-48A	48VDC	15A	+ / - / GND	68V	278j	106V
MCG-130A	130VDC	15A	+ / - / GND	150V	455j	200V

Mounting Specifications

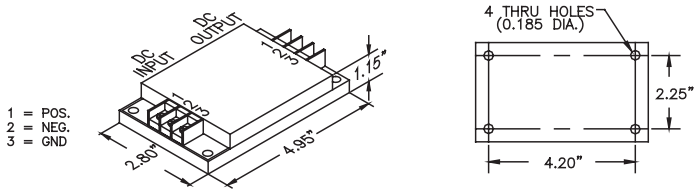

Series Connection

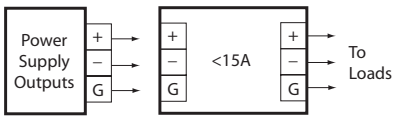

Parallel Connection

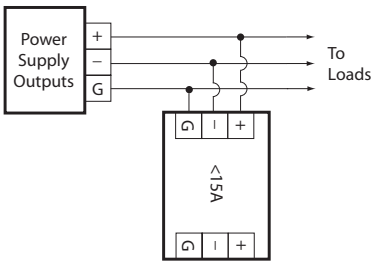

MCG Surge Protection • Toll Free: 1-800-851-1508 • www.mcgsurge.com • E-Mail: info@mcgsurge.com
12 Burt Drive, Deer Park, New York 11729, USA • Telephone: (631) 586-5125 • Fax: (631) 586-5120

DC Protector Installation Instructions

DC Power Supply Protector Series: MCG-12A/24A/32A/130A

Model: MCG-	12A	24A	32A	48A	130A
Rated Voltage(DC, ±15%)	12VDC	24VDC	32VDC	48VDC	130VDC
Rated Current (rms) @ 40°C (Series Connected)	15A	15A	15A	15A	15A
Service	+, -, gnd	+, -, gnd	+, -, gnd	+, -, gnd	+, -, gnd

The DC Protector is installed on the DC power bus at the equipment level where limited space is a concern. These provide brute force surge protection to prevent damage to sensitive loads and power supply mains.

To install:
1. DC power must be off. For indoor use only. Never install during a lightning storm.
2. Using insulated wire, connect power source to line side of protector as follows:
3. Connect + wire to Line 1 position and tighten screw.
4. Connect - wire to Line 2 position and tighten screw.
5. Bring ground wire to Line 3 position and tighten screw.
6. Using insulated wire, connect load side of protector to equipment.
7. Connect + wire to Load 1 position and tighten screw.
8. Connect - wire to Load 2 position and tighten screw.
9. Connect ground wire (must be 6" or less) to Load 3 position and make sure this is referenced to chassis ground.
10. Turn on DC power. Lit green LED indicates device is powered and protection is present.
11. For loads 15A or over, connect protector in parallel.

Mounting Specifications

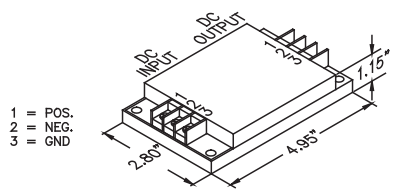

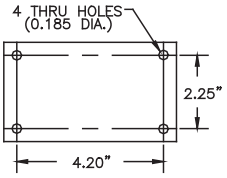

Series Connection

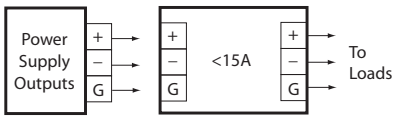

Parallel Connection

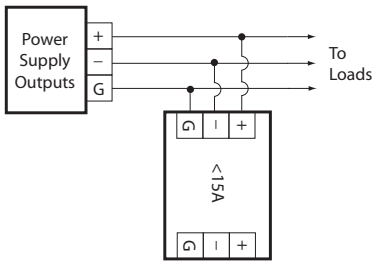

MCG Surge Protection ∞ 12 Burt Drive ∞ Deer Park, New York 11729 ∞ (631) 586-5125 ∞ E-Mail: info@mcgsurge.com

Data Line Protection

MODEL

DLP-4.71

Protects Modems, Fax, Telco

Modems, fax machines and telephone equipment are easily damaged by transients caused by lightning and switching surges. The DLP-4.71 installs in minutes between the telephone/data line and the sensitive equipment to provide quick and dependable protection for I/O ports.

For particularly severe transient conditions, model DLP-4.71 incorporates a one-two punch of fast-acting Avalanche diodes with brute force gas diodes for substantially greater heavy-duty diversion capability. Protection circuitry on the DLP-4.71 automatically resets after the transient has passed. The DLP-4.71 handles hit after hit without degradation.

MODELS

DLP-4.90 & 4.92

Protects Modems, Fax, Telco, T1, E1

DIN Rail Available

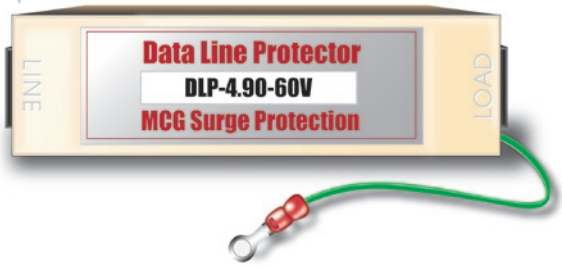

MCG's new DLP-4.90 and 4.92 surge protectors are designed to handle demanding Cat.5 applications.

Single port applications such as local area networks are easily damaged by transients caused by lightning and switching surges. The DLP-4 series installs in minutes between the data line and the sensitive equipment to provide quick and dependable protection for I/O ports.

Protection circuitry on both units automatically resets after the transient has passed.

SPECS

Extra Heavy Duty:	Ipk=10kA, 8/20µs
Connector:	RJ11 (F/F)
Clamp V:	6, 25, 60, 200V
Response Time:	<1ns
Protected:	Pins 2, 3, 4, 5
Series Rs:	2.4 Ohms
Attenuation:	<1db at 10MHz
Mounting:	4.2" x 2.25" (.185" ID) 107 x 57mm (4.7mm ID)
UL:	497A (Fuse), 497B
Weight:	<1 lb. (.45kg)

Ordering Information Example

DLP-4.71 - 6V2

Basic Model Number
Clamp Voltage
Series Resistance

SPECS

Model:	DLP-4.90	DLP-4.92
I Peak:	400A, 8/20µs	400A, 8/20µs
Connector:	RJ11 (F/F)	RJ45 (F/F)
Clamp:	6, 25, 60, 200V	6, 25, 60, 200V
Response Time:	<1ns	<1ns
Protected:	Pins 1-6	Pins 1-8
Mounting:	3.5" x 1" x 1" 89 x 25 x 25mm	3.5" x 1" x 1" 89 x 25 x 25mm
Weight:	<1 lb. (.45kg)	<1 lb. (.45kg)

Ordering Information Example

DLP-4.92 - 25V

Basic Model Number
Clamp Voltage

Go to http://www.mcgsurge.com/dataline for additional non-standard voltages.

12 Burt Drive, Deer Park, New York 11729, USA • Telephone: (631) 586-5125 • Fax: (631) 586-5120
MCG Surge Protection • Toll Free: 1-800-851-1508, www.mcgsurge.com, E-Mail: info@mcgsurge.com

"Bolt-On" Washer Thermocouple Assemblies

ANSI color code shown	To order IEC color code see pg. A-9

MEETS OR EXCEEDS SPECIAL LIMITS OF ERROR (SLE) AND EN 60584-2: Tolerance Class 1

- For M3.5 (#6), M4 (#8), M4.5 (#10) and M6 (¼") Screw Sizes
- New Rugged Design
- Stocked with Stripped End Leads
- Glass Rated to 480°C (900°F) Teflon Rated to 260°C (500°F)
- Inquire with Sales about Kapton Insulation and Custom Lengths or Sizes
- Made from 20 AWG Solid Wire

Washer Dimensions

#6 and #8 screw size: 22 L x 6.5 mm W (0.875 x 0.250")

#10 and ¼" screw size: 25 L x 9 mm W (1 x 0.360")

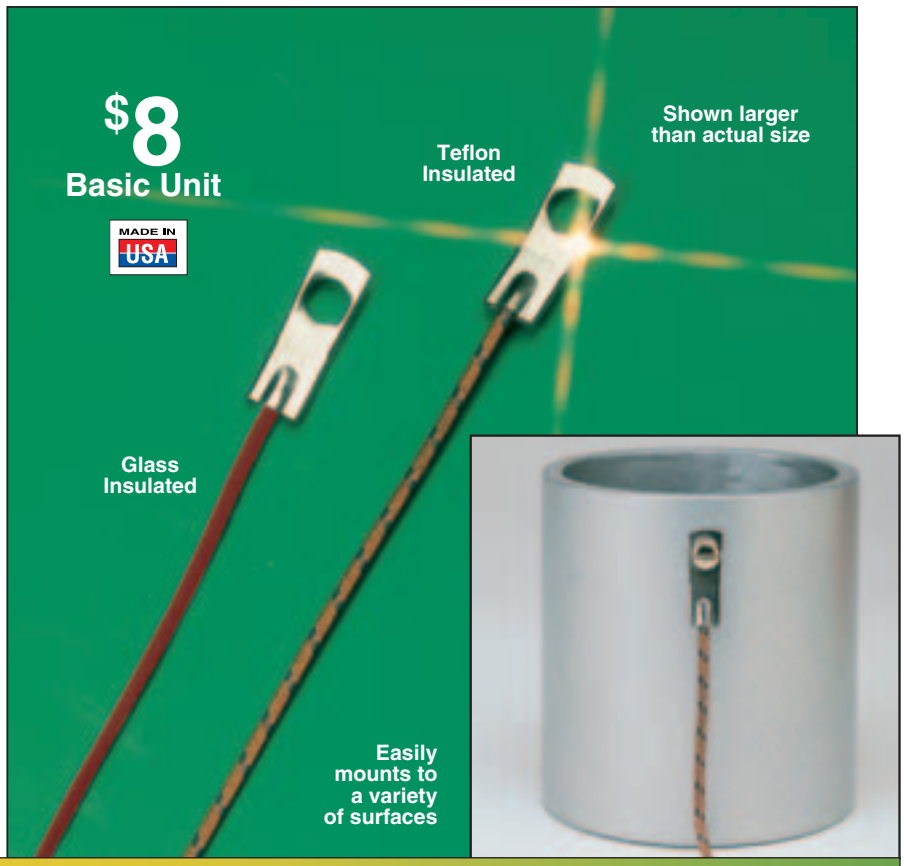

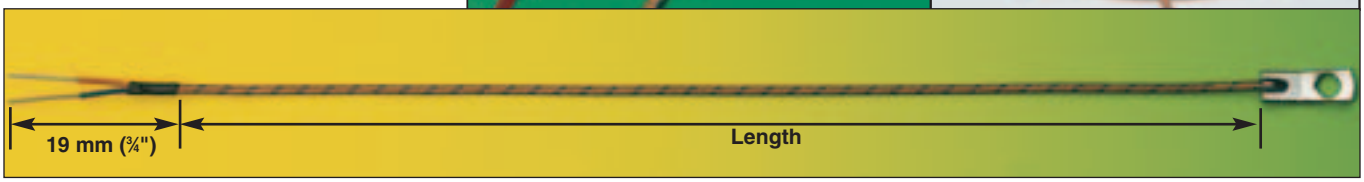

ALL MODELS AVAILABLE FOR FAST DELIVERY!

To Order *(Specify Model Number)*

Model No. 300 mm (12") L $8 each	Model No. 600 mm (24") L $9 each	Model No. 900 mm (36") L $10 each	Model No. 1500 mm (60") L $12 each	Washer Hole Diameter mm (inches)	Nominal Screw Size American	Nominal Screw Size Metric
GLASS INSULATED						
WT(*)-6-12	WT(*)-6-24	WT(*)-6-36	WT(*)-6-60	3.68 (0.145)	#6	M3.5
WT(*)-8-12	WT(*)-8-24	WT(*)-8-36	WT(*)-8-60	4.32 (0.170)	#8	M4
WT(*)-10-12	WT(*)-10-24	WT(*)-10-36	WT(*)-10-60	4.95 (0.195)	#10	M4.5
WT(*)-14-12	WT(*)-14-24	WT(*)-14-36	WT(*)-14-60	6.60 (0.260)	¼"	M6
TEFLON INSULATED						
WT(*)-6-12-TT	WT(*)-6-24-TT	WT(*)-6-36-TT	WT(*)-6-60-TT	3.68 (0.145)	#6	M3.5
WT(*)-8-12-TT	WT(*)-8-24-TT	WT(*)-8-36-TT	WT(*)-8-60-TT	4.32 (0.170)	#8	M4
WT(*)-10-12-TT	WT(*)-10-24-TT	WT(*)-10-36-TT	WT(*)-10-60-TT	4.95 (0.195)	#10	M4.5
WT(*)-14-12-TT	WT(*)-14-24-TT	WT(*)-14-36-TT	WT(*)-14-60-TT	6.60 (0.260)	¼"	M6

Specify calibration: J, K, T or E. Stripped leads are standard. To order other terminations, add suffix **"-L" for #10 spade lugs (**$4** add'l),*
*For OSTW male connector add "-**M**" (**$5** add'l), or add **"-F"** for OSTW female connector (**$5** add'l),*
*For SMPW male connector add "-**SMPW-M**" (**$5** add'l), or add **"-SMPW-F"** for OSTW female connector (**$5** add'l).*
*To order with lead lengths over 60", Change **"60"** in model number to desired length in inches, and add **$1.60** per add'l. foot to the 60" price.*
***Ordering Example: WTJ-6-12**, washer thermocouple, Type J, #6 screw, 300 mm (12") length, glass braid insulated wire, **$8**.*

omega.com®

Your One-Stop Source for Process Measurement and Control!

One Omega Drive | Stamford, CT 06907 | 1-888-TC-OMEGA (1-888-826-6342) | info@omega.com

www.omega.com

UNITED STATES
www.omega.com
1-800-TC-OMEGA
Stamford, CT.

CANADA
www.omega.ca
Laval(Quebec)
1-800-TC-OMEGA

GERMANY
www.omega.de
Deckenpfronn, Germany
0800-8266342

UNITED KINGDOM
www. omega.co.uk
Manchester, England
0800-488-488

FRANCE
www.omega.fr
Guyancourt, France
088-466-342

CZECH REPUBLIC
www.omegaeng.cz
Karviná, Czech Republic
596-311-899

BENELUX
www.omega.nl
Amstelveen, NL
0800-099-33-44

More than 100,000 Products Available!

- **Temperature**

Calibrators, Connectors, General Test and Measurement Instruments, Glass Bulb Thermometers, Handheld Instruments for Temperature Measurement, Ice Point References, Indicating Labels, Crayons, Cements and Lacquers, Infrared Temperature Measurement Instruments, Recorders Relative Humidity Measurement Instruments, RTD Probes, Elements and Assemblies, Temperature & Process Meters, Timers and Counters, Temperature and Process Controllers and Power Switching Devices, Thermistor Elements, Probes and Assemblies, Thermocouples Thermowells and Head and Well Assemblies, Transmitters, Wire

- **Flow and Level**

Air Velocity Indicators, Doppler Flowmeters, Level Measurement, Magnetic Flowmeters, Mass Flowmeters, Pitot Tubes, Pumps, Rotameters, Turbine and Paddle Wheel Flowmeters, Ultrasonic Flowmeters, Valves, Variable Area Flowmeters, Vortex Shedding Flowmeters

- **pH and Conductivity**

Conductivity Instrumentation, Dissolved Oxygen Instrumentation, Environmental Instrumentation, pH Electrodes and Instruments, Water and Soil Analysis Instrumentation

- **Data Acquisition**

Auto-Dialers and Alarm Monitoring Systems, Communication Products and Converters, Data Acquisition and Analysis Software, Data Loggers Plug-in Cards, Signal Conditioners, USB, RS232, RS485 and Parallel Port Data Acquisition Systems, Wireless Transmitters and Receivers

- **Pressure, Strain and Force**

Displacement Transducers, Dynamic Measurement Force Sensors, Instrumentation for Pressure and Strain Measurements, Load Cells, Pressure Gauges, Pressure Reference Section, Pressure Switches, Pressure Transducers, Proximity Transducers, Regulators, Strain Gages, Torque Transducers, Valves

- **Heaters**

Band Heaters, Cartridge Heaters, Circulation Heaters, Comfort Heaters, Controllers, Meters and Switching Devices, Flexible Heaters, General Test and Measurement Instruments, Heater Hook-up Wire, Heating Cable Systems, Immersion Heaters, Process Air and Duct, Heaters, Radiant Heaters, Strip Heaters, Tubular Heaters

• ***click here to go to the omega.com home page*** •

AUTOMATIONDIRECT.com
3505 HUTCHINSON ROAD
CUMMING, GA 30040-5860, USA

NOTICE: CHANGE TO STEP 7 OF THE QUICK START GUIDE

a.) To access the Main Menu of the touch panel setup screens, press the upper left corner of the panel display area for 3 seconds as shown to the right.

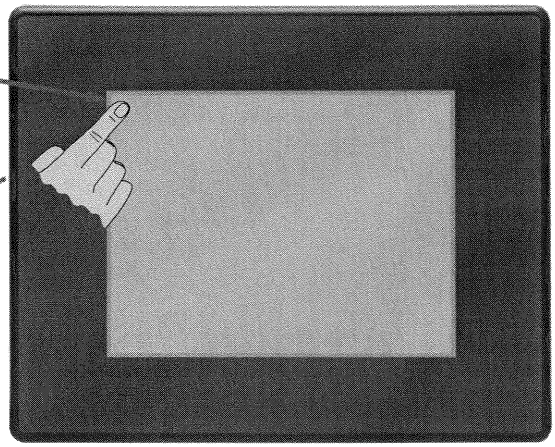

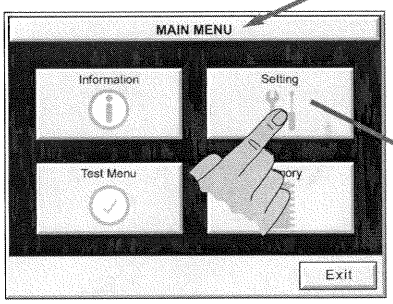

b.) Adjust the time and date for the panel by pressing the Setting button on the Main Menu, then press the Adjust Clock button on the Setting screen.

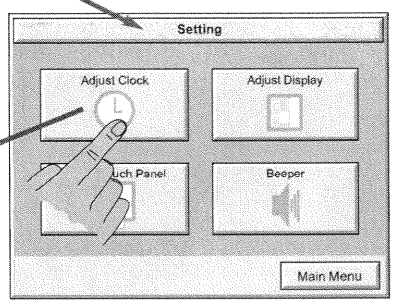

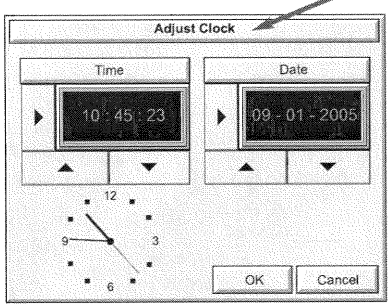

C.) Use the right pointing arrows for the Time or Date display to select the unit to change. Use the up and down arrows to increment or decrement the value for the selected unit. Press OK when done to accept the changes to the Time and Date that is retained in the touch panel's battery backed memory, or press Cancel to exit the Adjust Clock setup screen without making any changes.

d.) Press the Main Menu button on the Setting screen and then the Exit button on the Main Menu screen to return to the project screen.

1-800-633-0405

www.automationdirect.com/c-more

Copyright 2005, *Automationdirect.com* Incorporated/All Rights Reserved Worldwide

INSTALLATION, OPERATION AND MAINTENANCE GUIDE

FOR INDOOR/OUTDOOR DRY-TYPE TRANSFORMERS WHICH UTILIZE A NH SERIES, NJ1, NJ2, NJ3 OR NJ4 ENCLOSURE

Note: This guide is Trilingual (English, French and Spanish)

Literature No.: **IOMGDDI**
Issue Date: May 2010

Safety Precautions

(1) Do not lift or move a transformer without proper equipment and experienced personnel. On some larger kVA distribution transformers, lifting provisions are provided on the inside of the enclosure on the core & coil.

(2) Do not off-load the transformer until a full inspection has been completed.

(3) Use terminals only for electrical connections. Flexible connectors are recommended for bus connections. The transformer terminals are not designed to support the weight of supply or load cables. Uni-strut supports can be added in the field providing proper clearances are maintained.

(4) Connections should only be in accordance with the nameplate diagram or connection drawings.

(5) Make sure all power is disconnected before attempting any work on a transformer or inside of control box and ground all windings.

(6) Make certain all ground connections, line terminals and selected taps are complete and tighened before energizing the transformer.

(7) Do not attempt to change any taps - primary or secondary, while the transformer is energized.

(8) Do not change connections when the transformer is energized.

(9) Do not tamper with control panels, alarms, interlocks or control circuits.

(10) Do not adjust or remove any accessories or cover plates while the transformer is energized. No supply cables should come in contact with the core or any live part except the terminal that it is intende for.

CONTENTS

General	3
Handling	3
Receiving & Inspection	3
Storage	3
Installation	3
Ventilation	4
Accessibility	4
Transformer Sound Levels	4
Cable Connections	4
Grounding	5
Inspection Before Energization	5
Operation	5
Maintenance	6
Dry-out of Transformers	6
Accessories	6
Appendix A	7
Appendix B	8
Figure 1	9
Figure 2	10
Figure 3	11
Notes	12

INSTALLATION, OPERATION AND MAINTENANCE OF DRY-TYPE TRANSFORMERS

GENERAL

Dry-type transformers are manufactured to provide optimum performance for a lifetime of uninterrupted service. Careful attention to the following instructions is recommended for safe and reliable operation.

Installation, operation and maintenance of transformers should be performed by authorized persons, familiar with electrical apparatus and the potential hazards involved.

***Warning:* Danger! There is the potential of electric shock whenever working in or around electrical equipment such as transformers. Power must be shut off before any work is conducted on a transformer.**

As with any electrical device, transformers must be installed according to the requirements of the national and local electrical codes. Refer to ANSI/IEEE C57-94 may also be referred to for recommended installation, application, operation and maintenance of dry-type transformers.

HANDLING

Transformers are palletized and can either be lifted via a forklift truck or hoisted by the lifting lugs provided.

Appropriate lifting equipment should be used relative to the size of each transformer. For safety purposes and to protect the transformer, spreader bars are recommended.

No attempt should be made to lift or move a transformer from any points on the unit other than those indicated. Refer to Figures 1 and 2 (pages 9 and 10).

RECEIVING & INSPECTION

Immediately after receiving the transformer, it should be inspected for any transit damage and for correctness against the shipping documents.

The unit should be examined for any breaks in its packaging, dented or damaged enclosures or missing parts from the packing list.

If any damage is noted, a claim should be filed immediately with the carrier and a second copy of all pertinent information relative to the order and the circumstances should be filed with the local sales office.

If this examination of the unit takes place outdoors, caution should be exercised such that inclement weather would not present further hazard.

STORAGE

Transformers that will not be immediately installed and energized, should be stored in a clean dry environment away from any environmental airborne contaminants.

It is recommended that transformers be stored in a heated building with the protective plastic wrap still installed.

INSTALLATION

Enclosures are designed and approved in accordance with specifications CSA 22.2 No. 47 (General Purpose), CSA 22.2 No. 94 (Specialty Enclosures), NEMA 250 and UL 50.
For IEC enclosure equivalents please see IEC 60529 (Enclosure Classifications Designations).

a) Indoor/Outdoor Dry-Type Transformers with Enclosures

Most dry-type transformers are supplied with either a type 3R, 4 or 12 enclosure. Units may be installed indoors, or outdoors where applicable. If equipped with a type 1 enclosures, these units are for indoor use only.

Ventilated enclosures are recommended for indoor installation but may also be installed outdoors where weather conditions allow a type 3R ventilated enclosure to be installed.

For any outdoor location, the appropriate applicable codes must be followed including cable installation and hardware suitable for outdoor service.

Water tight couplings must be used at the knockouts and any holes in the enclosure must be drilled below any un-insulated live parts, (below LV terminals).

Dry-type transformers may be located in an upright position on walls, floors, posts, beams or other

locations capable of supporting their weight with the proper accessories attached. Refer to Appendix B (page 8) for wall mounting kits.

Conventional open ventilated dry-type transformers have a bottom screen for air convection. When transformers are mounted above the ground surface a catcher plate should be installed under each transformer as a safety precaution against any hot particles that may fall through the screen in the event of a faulted condition. Refer to Appendix B (page 8).

It is important that ventilated transformers be installed in a dry area where the ambient air is clean and free of dust, dirt, corrosive fumes, moisture, heat or other adverse conditions. Transformers should not be installed in such a place having the possibility of water logging inside the enclosure.

In the event that a transformer has been subjected to moisture or dampness before installation, ensure that it is completely cleaned and dried before energization. The blowing of warmed air through the transformer is recommended to dry internal components. Refer to the section on dry-out of transformers.

b) Indoor/Outdoor Transformers with Non-Ventilated Type 4, 4X or 12 Enclosures.

Transformers equipped with non-ventilated type 4, 4X or 12 enclosures maybe located either indoors or outdoors in any similar location noted above. Non-ventilated enclosed transformers, although slightly larger, offer much greater protection against a variety of elements such as dust, dirt, snow, moisture, rain etc.

For any outdoor location, the appropriate applicable codes must be followed including cable installation and hardware suitable for outdoor service.

VENTILATION

Transformers are required to be installed in an area where they can be cooled by means of the free circulation of air where the average ambient temperature is 30°C (86°F) and should not exceed 40°C (104°F) at any time.

Adequate ventilation is essential for transformers to meet their nameplate kVA capability. All general purpose transformers should be located away from walls or any other obstructions (at least 6 inches when floor mounted and 4 inches when wall mounted) to allow free, clean circulation of air through the ventilation openings or around a non-ventilated unit.

ACCESSIBILITY

NEC standards require that transformers be accessible for inspection and located accordingly.

However, transformers should not be located in areas where stored items are likely to interfere with either natural air convection or the capability to have them inspected. Passage ways or other areas where people could be exposed to live parts during inspection should also be avoided.

Adequate protection should be provided under any circumstances.

TRANSFORMER SOUND LEVELS

Transformers are an electrically energized apparatus and by their nature emit sound due to their component materials.

Transformers are required to meet NEMA standards for the maximum sound levels permissible. These sound level standards vary from 40 to 60 DB and hence, can be an annoyance if located in close proximity to where people work or reside.

Care should therefore be exercised in selecting sites for transformers particularly to avoid sensitive areas like hospitals, classrooms, medical or office facilities.

The following guidelines may be helpful:

- ➔ Units should be mounted away from corners or reflecting walls or ceilings.
- ➔ Cable or other flexible conduit should be considered to make connections.
- ➔ All dry-type transformers are provided with isolation rubber mounts between the core and coil assembly and the enclosure. However, sound absorbing vibration isolators may also be installed between the transformer and its mounting surface.
- ➔ Acoustically absorbing materials could be considered for walls and ceilings around the unit.
- ➔ The location of the unit should be located as far as practical from areas where sound levels could be considered undesirable.

CABLE CONNECTIONS

The connecting cable size is determined from the line current rating of the transformers primary and secondary windings and may be selected from the information in Appendix A (page 7). Cables rated for at least 90°C (194°F) is recommended as are ALC9CU lugs.

Convenient pre-punched knockouts are provided on all ventilated transformer enclosures up to 150 kVA

three phase and 100 kVA single phase, to facilitate cable entry.

For non-ventilated transformers, pre-punched knockouts are not provided and the appropriate cable connector suitable for the application must be used.

Please refer to figures 1 and 2 (pages 9 and 10) for cable entry locations.

***Warning:* Never attempt to change connections or taps unless the transformer is de-energized and all windings grounded.**

Side entry of cables is recommended as it leaves the ventilated areas unobstructed.

Cable connection lugs of plated copper or aluminum may be used to connect to the transformer terminals. Terminals should be cleaned and electrical joint compounds are recommended for use on all electrical connections.

Refer to the transformer nameplate for primary and secondary voltage connection combinations and primary and/or secondary tap positions as applicable.

Transformers received from the factory will have tap leads installed on the nominal, or 100%, voltage position. The balance of the tap positions will still be coated with impregnation material and insulation.

To change taps, it is necessary to remove this insulation by gently removing the protective coating from the surface appropriately. The surface of the tap lead should be clean and coated subsequently with electrical compound.

NOTE: After installation of cables and connectors, a minimum of 1" clearance must be maintained from energized parts to all case parts.

GROUNDING

All core and coil assemblies are solidly grounded to the enclosure internally to ensure that all conductive metal parts have the same potential.

The transformer enclosure in turn should also be securely and effectively grounded as a safety precaution.

This grounding should be in accordance with national electrical code standards.

INSPECTION BEFORE ENERGIZATION

For the safe and proper operation of the transformer, please check and verify the following:

a) The insulation resistance, core to primary, core to secondary and primary to secondary, should be greater than 10k ohms.

b) Before energizing and connecting any loads, please measure and verify the output voltage matches nameplate specifications.

c) Ensure correct phase connections. Refer to the nameplate vector diagram.

d) The load on a delta secondary winding with a 120 volt center tap should not exceed the normal current rating of the winding. This center tap is designed for a max. of 5% of the nameplate kVA.

e) When windings are connected in parallel (as in the case of dual voltage primaries), the primary taps for all coils must be connected to the identical percentage tap positions to avoid the shorting of turns. For tap positions, refer to the nameplate on the transformer.

f) The enclosure should be grounded with the appropriately sized conductor.

g) The total load among all the phases should be balanced as much as possible for optimum performance of the transformers windings. Any three phase or single phase load may be connected to the transformer but the kVA loading on each phase must not exceed 1/3 of the nameplate kVA rating.

h) The clearance and tightness of all electrical connections should be checked.

i) If there is any reason to suspect that the transformer has been exposed to moisture during transit or storage, it should be checked for dryness before energization. This can be done by making an insulation resistance test. Dry-out procedures are on page 6.

OPERATION

For all relatively normal and clean installations, dry-type transformers will operate satisfactorily under normal conditions of energization and load.

For your reference, fully loaded dry-type transformers may appear warm to the touch, particularly on the cover of the unit.

Standards permit the temperatures of the cover to be 65°C (149°F) over ambient. This represents normal loading and should not be of concern.

Dry-type transformers are designed to operate continuously at their full nameplate kVA rating.

ANSI C57.96 provides guidance for loading

transformers under different conditions including:

- ➔ Ambient temperatures that are varied from the ambient temperatures required for transformer operation.
- ➔ Short time overload as it relates to time and temperature and the corresponding loss of life of the transformer.
- ➔ Overload that results in a reduction of life expectancy of the transformer.

If the transformer is experiencing increased temperatures, the following load characteristics should be considered immediately:

- ➔ Rigorous motor starting loads or other impact type loading for which a specific transformer for that application is required.
- ➔ Over-excitation of unit due to excess supply line voltage or current.
- ➔ Ambient temperatures above standard.
- ➔ Overload beyond ANSI C57.96 guidelines.
- ➔ Harmonic distortions of the supply line voltage and currents.

If overheating is noted, any attempt to add supplemental fan cooling must be in accordance with factory installation guidelines. Incorrectly installed fans can misdirect the airflow and cause serious deterioration of the insulation life in a transformer coil.

Dry-type transformers can be shut down and stored for extended periods of time without any deterioration. Care must be exercised to clean and dry units prior to energization, as previously outlined.

MAINTENANCE

Under normal operating conditions and environments, dry-type transformers do not require maintenance. However, periodic care and inspection is a good practice particularly dependent on the environmental conditions in which the unit is installed.

Peripheral inspection and external dust removal may be carried out while the transformer is in operation. However, access covers must not be opened under energized conditions.

Internal maintenance must be performed with a transformer de-energized, isolated and with the terminals grounded.

Maintenance would include internal cleaning, tightening of links and bolted connections, servicing and inspection of auxiliary devices.

Air ducts should be free of any accumulation of dust and debris and any bolted connections of terminals must be in good condition.

Vacuuming or blowing of compressed air from the top down is an accepted practice for removing dust from the ducts of a transformer coil. Low pressure, dry air should be used to avoid further contamination of the windings by foreign material.

The ground connection should also be checked to ensure a low impedance connection. The accumulation of ice, snow or any other object blocking the ventilation should be cleaned up immediately during the operation of the transformer.

On outdoor units where filters have been installed, being exposed to the outside atmosphere can cause the filters to get dirty quickly. A periodic check of the filters will help avoid filter clogging and thus transformer overheating. Also, never run the transformer without the filters properly in place.

DRY-OUT OF TRANSFORMERS

In the event that transformers have been exposed to moisture such as condensation or rain, it is advisable to dry-out any unit prior to energization.

Drying may be accomplished by using any hot or warmed air, radiant heat or internal heat that is directed through the windings. Heated air should be allowed to rise up through the windings for a minimum of twenty four (24) hours after the evidence of condensation is no longer visible.

Transformers that have been exposed to flood conditions, direct rain or sprinklers, may not be able to be dried out appropriately. Contact the transformer manufacturer for appropriate action.

ACCESSORIES

Dry-type distribution transformers are available with a number of accessories to facilitate installation. Consult your local dealer or distributor for the purchase of any of the items which may be carried in inventory.

1) Wall Mounting Brackets

Encapsulated transformers have integral wall mounting capabilities for units up to 285 lbs. Units over 285 lbs. must be floor mounted only.

Ventilated dry-type transformers are normally designed to be floor mounted only. However, some ventilated units up to 51kVA are supplied in enclosures that have integral wall mounting capabilities. These units can be conveniently mounted on walls, beams or

poles.

Conventional open ventilated dry-type transformers have a bottom screen for air convection. When transformers are mounted above the ground surface a catcher plate should be installed under each transformer as a safety precaution against any hot particles that may fall through the screen in the event of a faulted condition. Refer to Appendix B (page 8).

2) Sound Isolation Pads

All dry-type transformers have rubberized sound absorbing pads mounted internally between the core and coil assembly and the enclosure.

For maximum absorption of vibration and emission of sound, additional sound isolation pads are recommended for installation between the transformer and the mounting surface.

These molded neoprene and steel plate assemblies virtually eliminate vibration noise between the transformer and the mounting surface.

Consult the manufacture's catalog for the part number of the correct isolation pad required

3) Connectors

Connectors for the installation of dry-type transformers are readily available. These connectors are suitable for either copper or aluminum cable.

Connectors should be sized and installed in accordance with your local electrical code requirements using the best practices to ensure safe and reliable operation. Cable surfaces should be cleaned and electrical compound should be used for all joints.

Selecting Connectors

a) Determine the primary current for the required transformer from the Appendix A.

b) Similarly, determine the secondary current rating for the transformer from Appendix A.

c) For 120/240 voltage connections the current should be based on 240 volts.

d) For 240/480 volt connections, the current should be based on 480 volts.

APPENDIX A

AMPACITY RATINGS FOR CONNECTIONS

A. For a single phase transformer

$$\text{Line Amperes} = \frac{\text{volt-amperes}}{\text{line volts}}$$

B. For a three phase transformer

$$\text{Line Amperes} = \frac{\text{volt amperes}}{\sqrt{3} \times \text{line Volts}}$$

Full Load Current Table
Single Phase Transformer

kVA Rating	Current in Amperes				
	120V	240V	416V	480V	600V
3	25.0	12.5	7.21	6.25	5.00
5	41.6	20.8	12.0	10.4	8.33
7.5	62.5	31.2	18.0	15.6	12.5
10	83.3	41.6	24.0	20.8	16.6
15	125	62.5	36.0	31.2	25.0
25	208	104	60.0	52.0	41.6
37.5	312	156	90.1	78.1	62.5
50	416	208	120	104	83.3
75	625	312	180	156	125
100	833	416	240	208	166
150	1250	625	360	312	250
167	1391	695	401	347	278
250	2083	1041	600	520	416
333	2775	1387	800	693	555

Full Load Current Table
Three Phase Transformer

kVA Rating	Current in Amperes					
	208V	240V	380V	416V	480V	600V
2	5.55	4.81	3.03	2.77	2.40	1.92
3	8.32	7.21	4.55	4.16	3.60	2.88
6	16.6	14.4	9.11	8.32	7.21	5.77
9	24.9	21.6	13.6	12.4	10.8	8.66
15	41.6	36.0	22.7	20.8	18.0	14.4
30	83.2	72.1	45.5	41.6	36.0	28.8
45	124	108	68.3	62.4	54.1	43.3
75	208	180	113	104	90.2	72.1
112.5	312	270	170	156	135	108
150	416	360	227	208	180	144
225	624	541	341	312	270	216
300	832	721	455	416	360	288
450	1249	1082	683	624	541	433
500	1387	1202	759	693	601	481
600	1665	1443	911	832	721	577
750	2081	1804	1139	1040	902	721

APPENDIX B

LOCATION OF WALL MOUNTING BRACKETS AND CATCHER PLATES FOR NH3 SERIES TYPE 3R ENCLOSURES

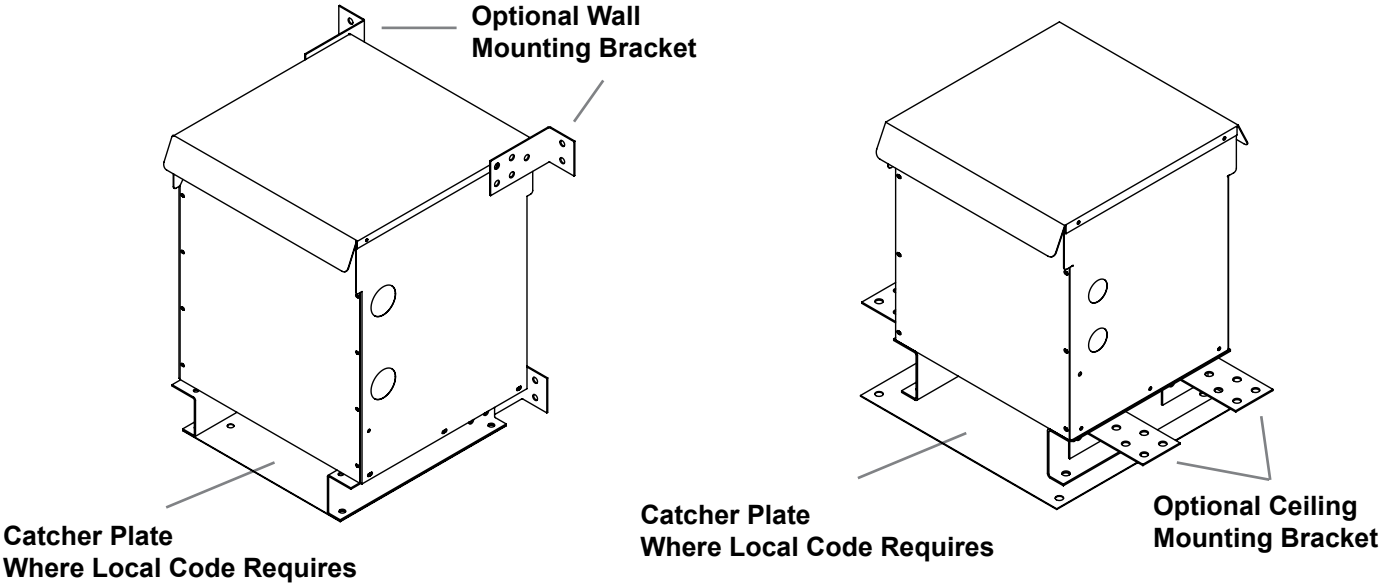

APPENDIX B

LOCATION OF WALL MOUNTING BRACKETS AND CATCHER PLATES FOR NH5 & NH6 SERIES TYPE 3R ENCLOSURES

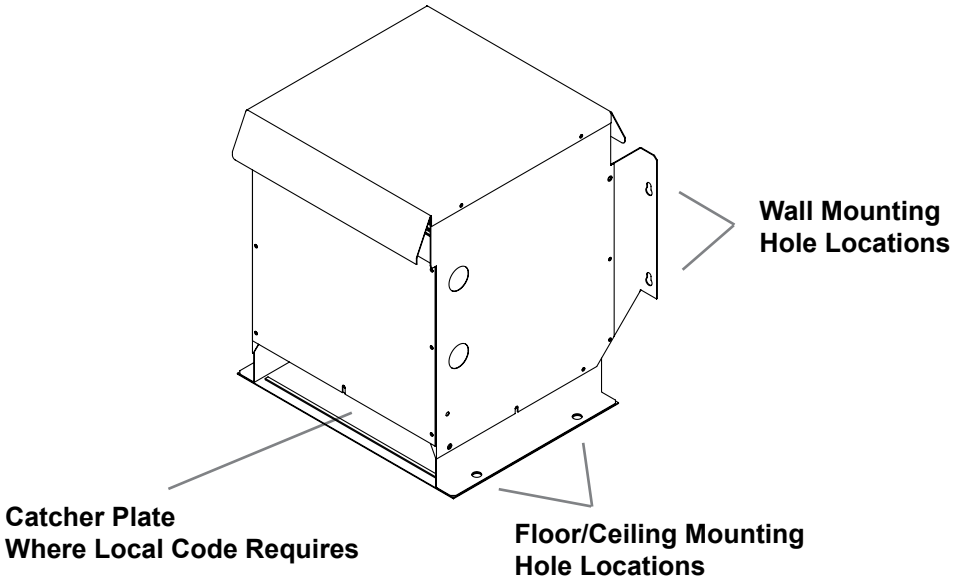

FIGURE 1

Typical Type 3R, NH Series Ventilated Enclosure Assembly for Three Phase and Single Phase Transformers.

Notes:

1. Handling - units are designed to be raised by a fork lift from underneath the pallet. Final positioning of the unit with the pallet removed can be via a fork lift under the transformer with the forks between the channels.

2. Shipping - units are shipped on pallets which are to be removed at installation.

3. Installation - This transformer can be installed indoor or outdoor providing a degree of protection against falling rain, sleet and external ice formation.

4. All general purpose/drive isolation transformers should be located away from walls or any other obstructions at least 6 inches when floor mounted and 4 inches when wall mounted.

5. DO NOT block bottom ventilation area.

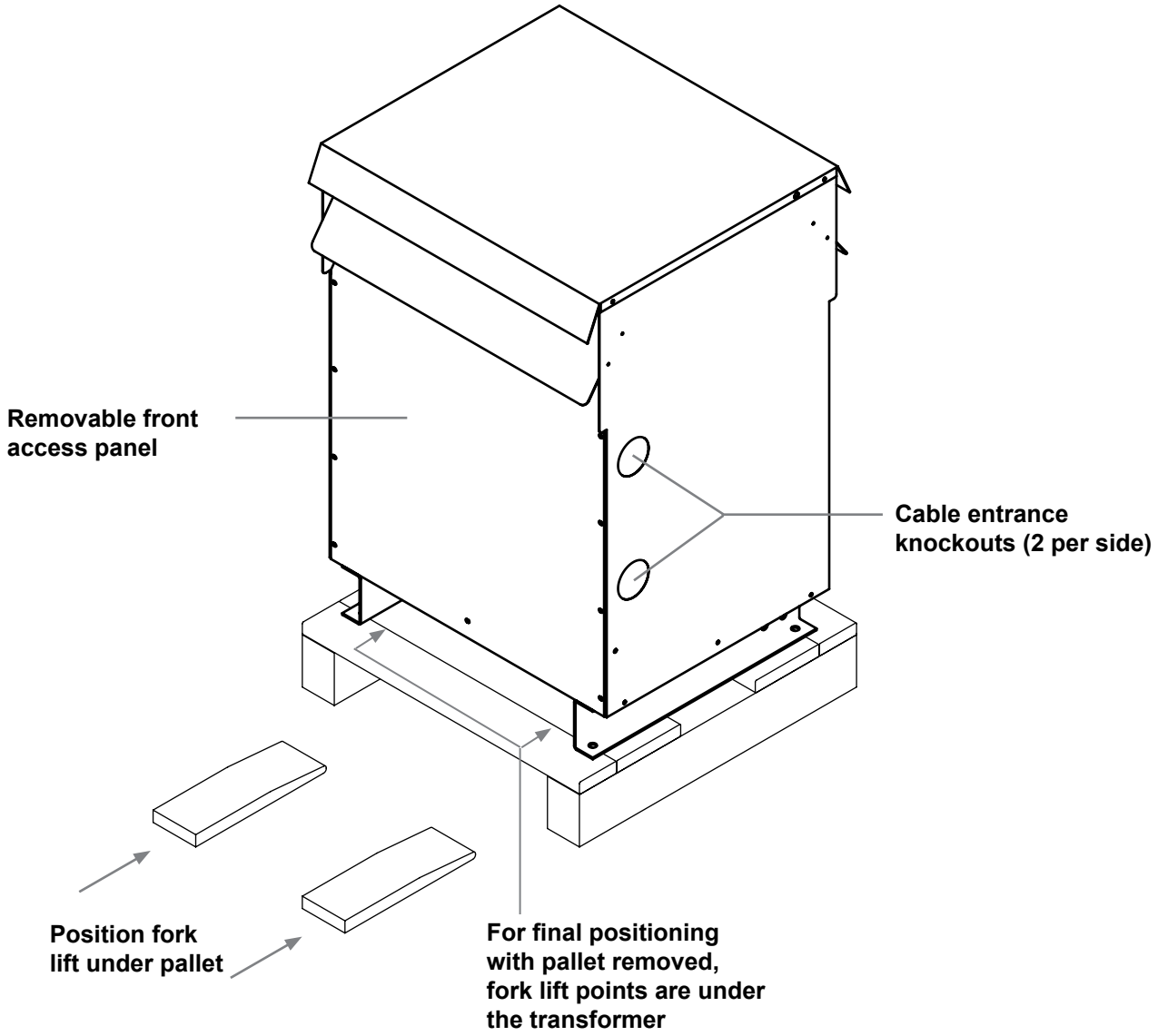

FIGURE 2

Typical Type 3R, NJ Series Ventilated Enclosure Assembly for Three Phase or Single Phase Transformers.

Notes:

1. Handling - units are designed to be raised by a fork lift from underneath the pallet. Final positioning of the unit with the pallet removed can be via a fork lift under the transformer with the forks between the channels. **(Note: for transformers weighing greater than 2350 lbs should be lifted by removing the top panel and accessing the lifting provisions on top of the top of the core and coil.)**

2. Shipping - units are shipped on pallets which are to be removed at installation.

3. Installation - This transformer can be installed indoor or outdoor providing a degree of protection against falling rain, sleet and external ice formation.

4. All general purpose/drive isolation transformers should be located away from walls or any other obstructions at least 6 inches when floor mounted and 4 inches when wall mounted. (Note: These enclosures are not intended to be wall mounted. They may be mounted on a customer supplied platform.)

5. DO NOT block bottom ventilation area.

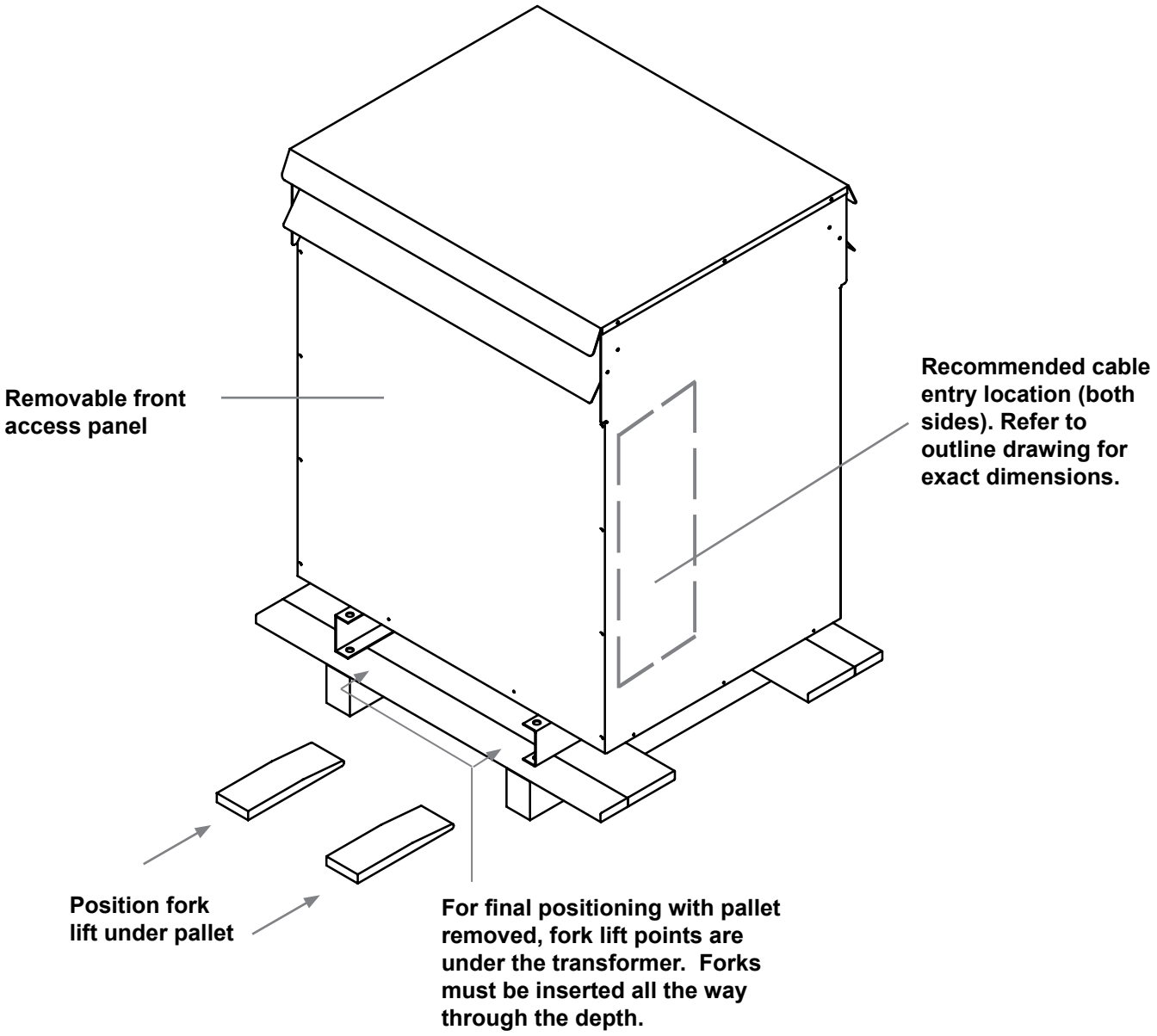

FIGURE 3

Typical Type 4 & 12, NH Series Non-Ventilated Enclosure Assembly for Three Phase or Single Phase Transformers.

Notes:

1. Handling - units are designed to be raised by a fork lift from underneath the pallet. Final positioning of the unit with the pallet removed can be via a fork lift under the transformer with the forks between the channels.

2. Shipping - units are shipped on pallets which are to be removed at installation.

3. Installation - This is a non-ventilated indoor or outdoor enclosure designed primarily to provide a degree of protection against falling dirt, rain, sleet, snow, windblown dust, splashing water, hose-directed water and that will be undamaged by the external formation of ice on the enclosure. It is suitable in areas where exposure to large amounts water from any direction is possible. (Note: not submersible)

4. All general purpose/drive isolation transformers should be located away from walls or any other obstructions at least 6 inches when floor mounted and 4 inches when wall mounted.

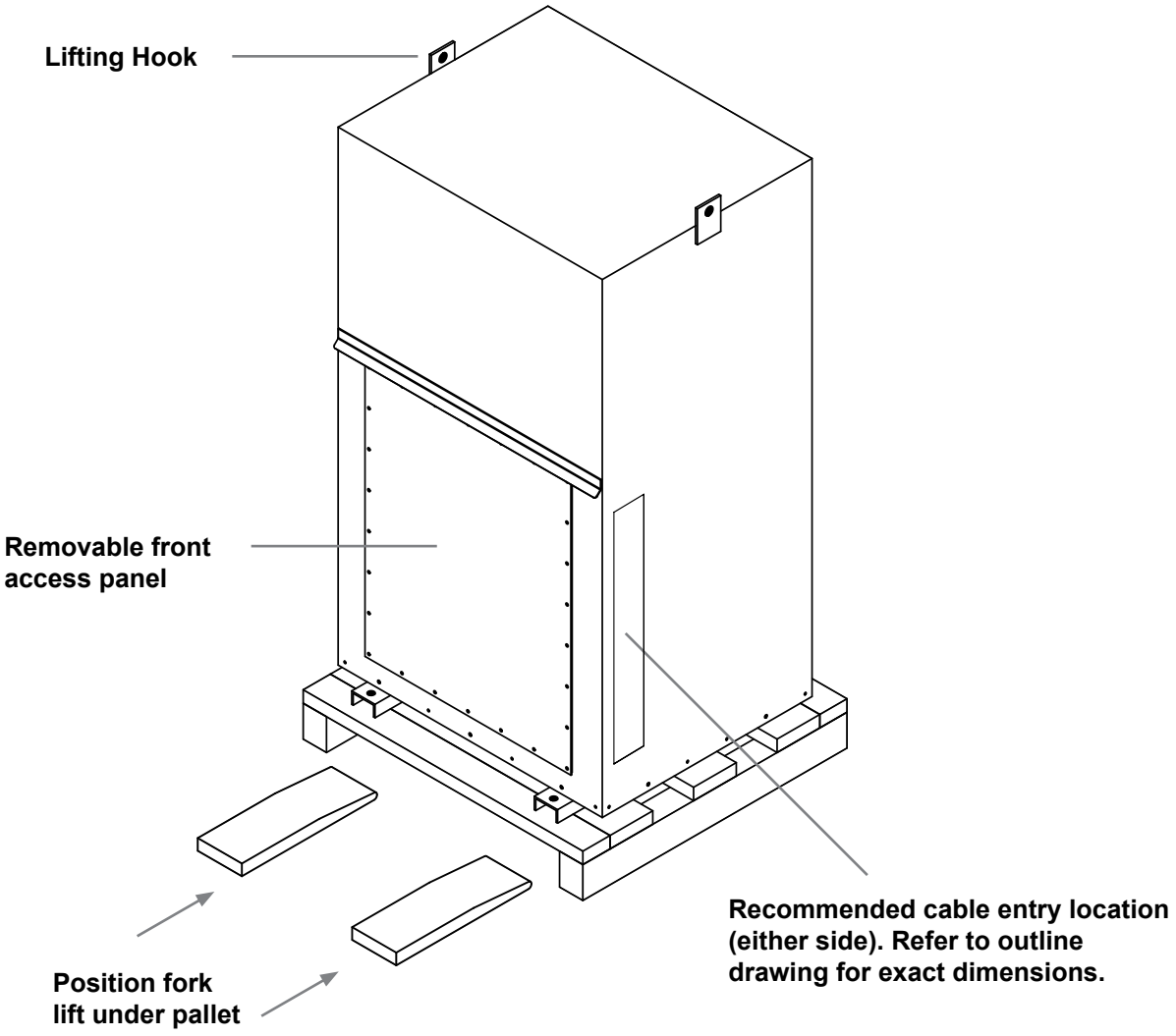

Notes

Reference Manual
00809-0100-4101, Rev AA
July 2008

Rosemount 2051 Pressure Transmitter

with 4-20 mA HART and 1-5 Vdc Low Power Protocol

HART FIELD COMMUNICATIONS PROTOCOL

ROSEMOUNT®

www.rosemount.com

EMERSON™
Process Management

Rosemount 2051 Pressure Transmitter

NOTICE

Read this manual before working with the product. For personal and system safety, and for optimum product performance, make sure you thoroughly understand the contents before installing, using, or maintaining this product.

For technical assistance, contacts are listed below:

Customer Central
Technical support, quoting, and order-related questions.

United States - 1-800-999-9307 (7:00 am to 7:00 pm CST)

Asia Pacific- 65 777 8211

Europe/ Middle East/ Africa - 49 (8153) 9390

North American Response Center
Equipment service needs.

1-800-654-7768 (24 hours—includes Canada)

Outside of these areas, contact your local Emerson Process Management representative.

⚠CAUTION

The products described in this document are NOT designed for nuclear-qualified applications. Using non-nuclear qualified products in applications that require nuclear-qualified hardware or products may cause inaccurate readings.

For information on Rosemount nuclear-qualified products, contact your local Emerson Process Management Sales Representative.

Rosemount 2051 Pressure Transmitters may be protected by one or more of the following: U.S. Patent Nos. 4466290; 4612812; 4791352; 4798089; 4818994; 4866435; 4878012; 4988990; 4926340; 5083091; 5122794; 5166678; 5248167; 5278543; 5287746; 5329818; 5333504; 5585777; 6017143; 6119047; 6295875; Des. 317266; Des. 318432; Des 342456. May depend on model. Other U.S. and foreign patents issued and pending.

Table of Contents

SECTION 1 Introduction

Using This Manual 1-1
Service Support 1-1
Models Covered 1-2
Transmitter Overview 1-3

SECTION 2 Installation

Overview 2-1
Safety Messages 2-1
Warnings 2-2
General Considerations 2-2
Mechanical Considerations 2-3
Environmental Considerations 2-3
HART Installation Flowchart 2-4
Installation Procedures 2-5
Dimensional Drawings 2-5
Mount the Transmitter 2-12
Impulse Piping 2-17
Process Connections 2-19
Housing Rotation 2-21
LCD Display 2-22
Configure Security and Alarm 2-22
Electrical Considerations 2-25
Conduit Installation 2-25
Wiring 2-26
Transient Protection Terminal Block 2-28
Grounding 2-29
Hazardous Locations Certifications 2-31
Rosemount 305, 306 and 304 Manifolds 2-31
Rosemount 305 Integral Manifold Installation Procedure 2-32
Rosemount 306 Integral Manifold Installation Procedure 2-32
Rosemount 304 Conventional Manifold Installation Procedure . . 2-32
Integral Manifold Operation 2-33
Liquid Level Measurement 2-35
Open Vessels 2-35
Closed Vessels 2-35

SECTION 3 Configuration

Overview 3-1
Safety Messages 3-1
Warnings 3-1
Commissioning 3-2
Setting the Loop to Manual 3-2
Wiring Diagrams 3-3
Configuration Data Review 3-4
HART Communicator Menu Trees 3-5
Fast Key Sequence 3-7
Check Output 3-8
Process Variables 3-8
Sensor Temperature 3-8
Basic Setup 3-9
Set Process Variable Units 3-9

Set Output (Transfer function) 3-9
Rerange 3-10
Damping 3-13
LCD Display 3-14
LCD Display Configuration for 4-20 mA HART only 3-15
Custom Display Configuration 4-20 mA HART only 3-15
Detailed Setup 3-16
Failure Mode Alarm and Saturation 3-16
Alarm and Saturation Levels for Burst Mode 3-17
Alarm and Saturation Values for Multidrop Mode 3-17
Alarm Level Verification 3-18
Diagnostics and Service 3-18
Transmitter Test 3-18
Loop Test 3-18
Advanced Functions 3-20
Saving, Recalling, and Cloning Configuration Data 3-20
Burst Mode 3-22
Multidrop Communication 3-23
Changing a Transmitter Address 3-24
Communicating with a Multidropped Transmitter 3-24
Polling a Multidropped Transmitter 3-24

SECTION 4
Operation and Maintenance

Overview 4-1
Safety Messages 4-1
Warnings 4-1
Calibration Overview 4-2
Determining Calibration Frequency 4-4
Choosing a Trim Procedure 4-6
Analog Output Trim 4-7
Digital-to-Analog Trim 4-7
Digital-to-Analog Trim Using Other Scale 4-8
Recall Factory Trim—Analog Output 4-9
Sensor Trim 4-10
Sensor Trim Overview 4-10
Zero Trim 4-10
Sensor Trim 4-11
Recall Factory Trim—Sensor Trim 4-12
Compensating for Line Pressure 4-13

SECTION 5
Troubleshooting

Overview 5-1
Safety Messages 5-1
Warnings () 5-1
Diagnostic Messages 5-3
Disassembly Procedures 5-8
Remove from Service 5-8
Remove Terminal Block 5-8
Remove the Electronics Board 5-9
Remove the Sensor Module from the Electronics Housing 5-9
Reassembly Procedures 5-10
Attach the Electronics Board 5-10
Install the Terminal Block 5-10
Reassemble the 2051C Process Flange 5-10
Install the Drain/Vent Valve 5-11

APPENDIX A Reference Data

Performance Specifications A-1
Conformance To Specification (±3s (Sigma)). A-1
Reference Accuracy(1) A-1
Long Term Stability. A-2
Dynamic Performance A-2
Line Pressure Effect per 1000 psi (6,9 MPa) A-2
Ambient Temperature Effect per 50°F (28°C) A-3
Mounting Position Effects A-3
Vibration Effect A-3
Power Supply Effect A-3
Electromagnetic Compatibility (EMC). A-3
Transient Protection (Option Code T1). A-3
Functional Specifications A-4
Range and Sensor Limits A-4
Service A-4
Protocols. A-4
Overpressure Limits A-6
Static Pressure Limit. A-7
Burst Pressure Limits A-7
Temperature Limits. A-7
Humidity Limits A-8
Volumetric Displacement A-8
Damping A-8
Failure Mode Alarm A-8
Physical Specifications A-9
Electrical Connections A-9
Process Connections A-9
2051C Process Wetted Parts A-9
2051T Process Wetted Parts A-9
2051L Process Wetted Parts A-9
Non-Wetted Parts for 2051C/T/L A-10
Shipping Weights A-11
Ordering Information A-12
Options A-22
Spare Parts A-25

APPENDIX B Approval Information

Overview B-1
Safety Messages B-1
Warnings B-1
Approved Manufacturing Locations B-1
European Directive Information B-2
HART Protocol B-2
Hazardous Locations Certifications B-2
Approval Drawings. B-8
Factory Mutual (FM) B-8
Canadian Standards Association (CSA). B-21

APPENDIX C Glossary

Glossary. . . . . C-1 to C-2

Section 1 Introduction

USING THIS MANUAL

The sections in this manual provide information on installing, operating, and maintaining Rosemount 2051 pressure transmitters with HART® protocol. The sections are organized as follows:

- **Section 2: Installation** contains mechanical and electrical installation instructions, and field upgrade options.
- **Section 3: Configuration** provides instruction on commissioning and operating Rosemount 2051 transmitters. Information on software functions, configuration parameters, and online variables is also included.
- **Section 4: Operation and Maintenance** contains operation and maintenance techniques.
- **Section 5: Troubleshooting** provides troubleshooting techniques for the most common operating problems.
- **Appendix A: Reference Data** supplies reference and specification data, as well as ordering information.
- **Appendix B: Approval Information** contains intrinsic safety approval information, European ATEX directive information, and approval drawings.
- **Appendix C: Glossary**

SERVICE SUPPORT

To expedite the return process outside of the United States, contact the nearest Emerson Process Management representative.

Within the United States, call the Emerson Process Management Instrument and Valves Response Center using the 1-800-654-RSMT (7768) toll-free number. This center, available 24 hours a day, will assist you with any needed information or materials.

The center will ask for product model and serial numbers, and will provide a Return Material Authorization (RMA) number. The center will also ask for the process material to which the product was last exposed.

⚠CAUTION

Individuals who handle products exposed to a hazardous substance can avoid injury if they are informed of and understand the hazard. If the product being returned was exposed to a hazardous substance as defined by OSHA, a copy of the required Material Safety Data Sheet (MSDS) for each hazardous substance identified must be included with the returned goods.

Emerson Process Management Instrument and Valves Response Center representatives will explain the additional information and procedures necessary to return goods exposed to hazardous substances.

MODELS COVERED

The following Rosemount 2051 Pressure Transmitters are covered by this manual:

Rosemount 2051C Coplanar™ Pressure Transmitter

2051CD - Differential Pressure Transmitter
Measures differential pressure up to 2000 psi (137,9 bar)

2051CG - Gage Pressure Transmitter
Measures gage pressure up to 2000 psi (137,9 bar)

Rosemount 2051T In-Line Pressure Transmitter

2051TG - Gage Pressure Transmitter
Measures gage pressure up to 10000 psi (689,5 bar)

2051TA - Absolute Pressure Transmitter
Measures absolute pressure up to 10000 psi (689,5 bar)

Rosemount 2051L Liquid Level Pressure Transmitter

2051L - Flange-Mounted Liquid Level Transmitter
Provides precise level and specific gravity measurements up to 300 psi (20,7 bar) for a wide variety of tank configurations

TRANSMITTER OVERVIEW

The Rosemount 2051C Coplanar design is offered for Differential Pressure (DP) and Gage Pressure (GP) measurements where it utilizes Emerson Process Management capacitance sensor technology. Piezoresistive sensor technology is utilized in the Rosemount 2051T measurements.

The major components of the Rosemount 2051C are the sensor module and the electronics housing. The sensor module contains the oil filled sensor system (isolating diaphragms, oil fill system, and sensor) and the sensor electronics. The sensor electronics are installed within the sensor module and include a temperature sensor (RTD), a memory module, and the capacitance to digital signal converter (C/D converter). The electrical signals from the sensor module are transmitted to the output electronics in the electronics housing. The electronics housing contains the output electronics board, the local zero and span buttons, and the terminal block. The basic block diagram of the Rosemount 2051CD is illustrated in Figure 1-1.

For the Rosemount 2051C design, pressure is applied to the isolating diaphragms, the oil deflects the center diaphragm, which then changes the capacitance. This capacitance signal is then changed to a digital signal in the C/D converter. The microprocessor then takes the signals from the RTD and C/D converter calculates the correct output of the transmitter. This signal is then sent to the D/A converter, which converts the signal back to an analog signal and superimposes the HART signal on the 4-20 mA output.

Figure 1-1. Block diagram of operation

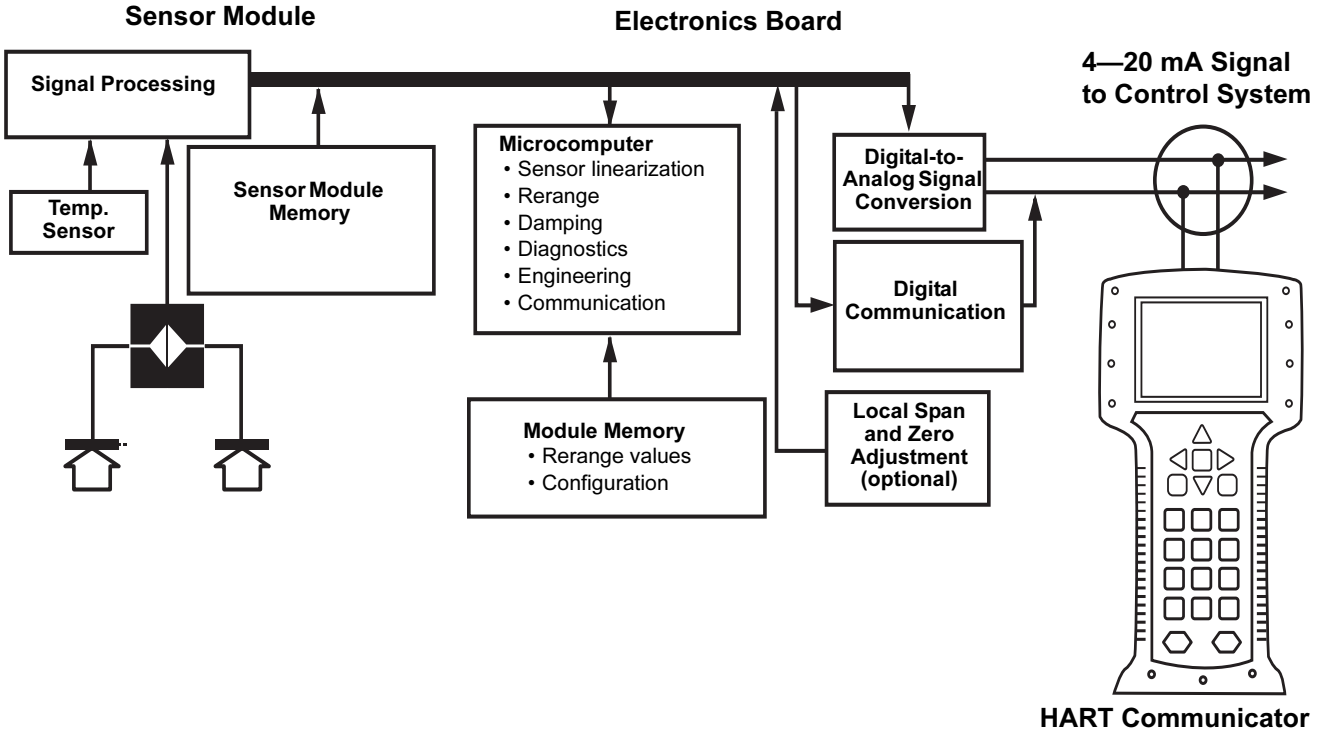

Section 2 Installation

Overview . . . . . **page 2-1**
Safety Messages . . . . . **page 2-1**
General Considerations . . . . . **page 2-2**
Mechanical Considerations . . . . . **page 2-3**
Environmental Considerations . . . . . **page 2-3**
HART Installation Flowchart . . . . . **page 2-4**
Installation Procedures . . . . . **page 2-5**
Dimensional Drawings . . . . . **page 2-5**
Electrical Considerations . . . . . **page 2-25**
Hazardous Locations Certifications . . . . . **page 2-31**
Rosemount 305, 306 and 304 Manifolds . . . . . **page 2-31**
Liquid Level Measurement . . . . . **page 2-35**

OVERVIEW

The information in this section covers installation considerations for the Rosemount 2051 with HART protocols. A Quick Installation Guide for HART protocol (document number 00825-0100-4101) is shipped with every transmitter to describe basic pipe-fitting and wiring procedures for initial installation. Dimensional drawings for each 2051 variation and mounting configuration are included on page 2-5.

HART Communicator and AMS Device Manager instructions are given to perform configuration functions. For convenience, HART Communicator fast key sequences are labeled “Fast Keys” for each software function below the appropriate headings.

SAFETY MESSAGES

Procedures and instructions in this section may require special precautions to ensure the safety of the personnel performing the operation. Information that raises potential safety issues is indicated with a warning symbol (⚠). Refer to the following safety messages before performing an operation preceded by this symbol.

Warnings

⚠WARNING

Explosions could result in death or serious injury:
Installation of this transmitter in an explosive environment must be in accordance with the appropriate local, national, and international standards, codes, and practices. Please review the approvals section of the 2051 reference manual for any restrictions associated with a safe installation.

- Before connecting a HART communicator in an explosive atmosphere, ensure the instruments in the loop are installed in accordance with intrinsically safe or non-incendive field wiring practices.
- In an Explosion-Proof/Flameproof installation, do not remove the transmitter covers when power is applied to the unit.

Process leaks may cause harm or result in death.

- Install and tighten process connectors before applying pressure.

Electrical shock can result in death or serious injury.

- Avoid contact with the leads and terminals. High voltage that may be present on leads can cause electrical shock.

⚠WARNING

Electrical shock can result in death or serious injury.

- Avoid contact with the leads and terminals.

Process leaks could result in death or serious injury.

- Install and tighten all four flange bolts before applying pressure.
- Do not attempt to loosen or remove flange bolts while the transmitter is in service.

Replacement equipment or spare parts not approved by Emerson Process Management for use as spare parts could reduce the pressure retaining capabilities of the transmitter and may render the instrument dangerous.

- Use only bolts supplied or sold by Emerson Process Management as spare parts.
- Refer to page A-25 for a complete list of spare parts.

Improper assembly of manifolds to traditional flange can damage sensor module.

- For safe assembly of manifold to traditional flange, bolts must break back plane of flange web (i.e., bolt hole) but must not contact sensor module housing.

GENERAL CONSIDERATIONS

Measurement accuracy depends upon proper installation of the transmitter and impulse piping. Mount the transmitter close to the process and use a minimum of piping to achieve best accuracy. Also, consider the need for easy access, personnel safety, practical field calibration, and a suitable transmitter environment. Install the transmitter to minimize vibration, shock, and temperature fluctuation.

IMPORTANT
Install the enclosed pipe plug (found in the box) in unused conduit opening with a minimum of five threads engaged to comply with explosion-proof requirements.

For material compatibility considerations, see document number 00816-0100-3045 on www.emersonprocess.com/rosemount.

MECHANICAL CONSIDERATIONS

NOTE
For steam service or for applications with process temperatures greater than the limits of the transmitter, do not blow down impulse piping through the transmitter. Flush lines with the blocking valves closed and refill lines with water before resuming measurement.

NOTE
When the transmitter is mounted on its side, position the Coplanar flange to ensure proper venting or draining. Mount the flange as shown in Figure 2-8 on page 2-18, keeping drain/vent connections on the bottom for gas service and on the top for liquid service.

ENVIRONMENTAL CONSIDERATIONS

Best practice is to mount the transmitter in an environment that has minimal ambient temperature change. The transmitter electronics temperature operating limits are –40 to 185 °F (–40 to 85 °C). Refer to Appendix A: Reference Data that lists the sensing element operating limits. Mount the transmitter so that it is not susceptible to vibration and mechanical shock and does not have external contact with corrosive materials.

HART INSTALLATION FLOWCHART

Figure 2-1. HART Installation Flowchart

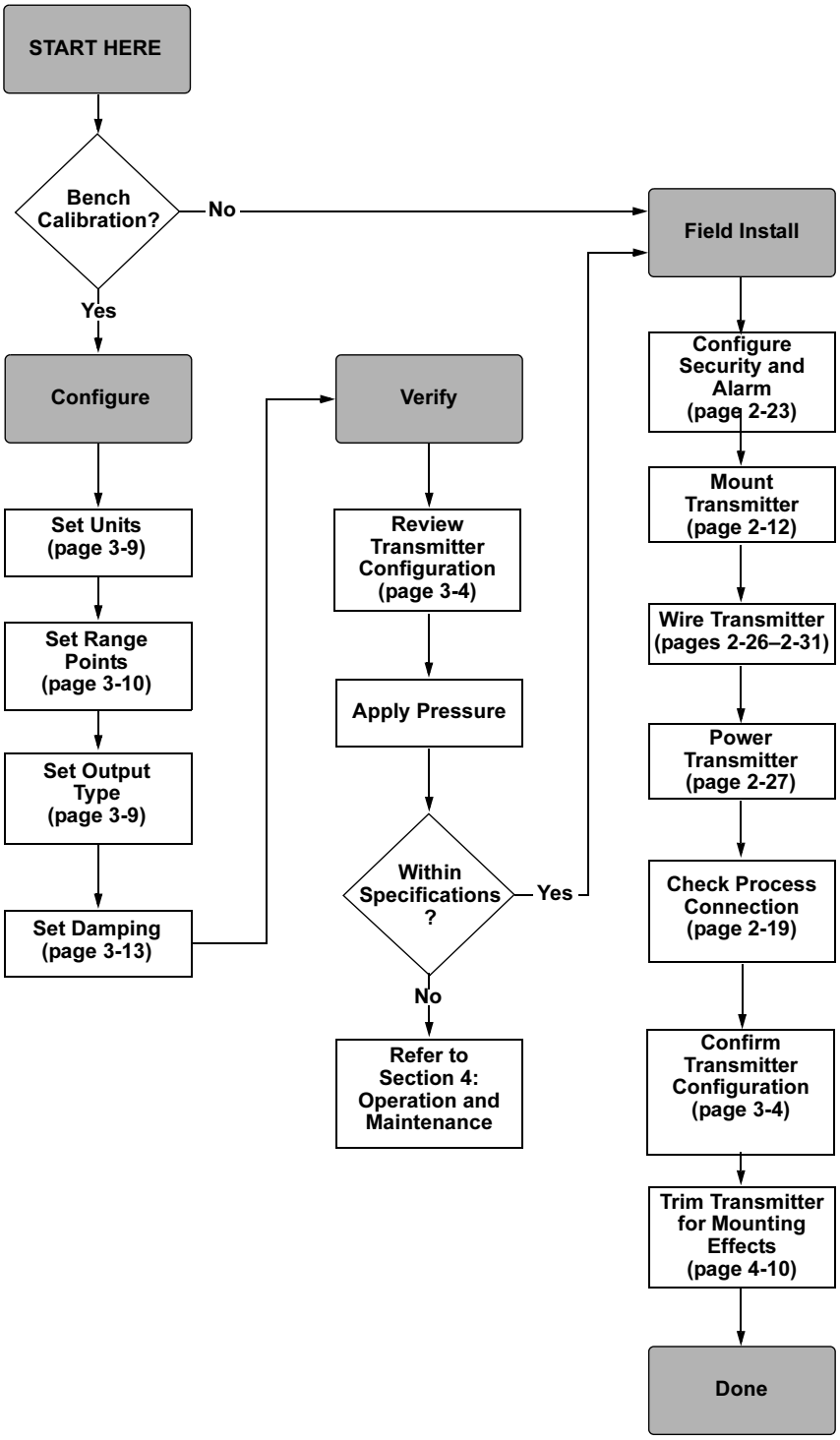

INSTALLATION PROCEDURES

Dimensional Drawings

2051C Coplanar Flange Dimensional Drawing

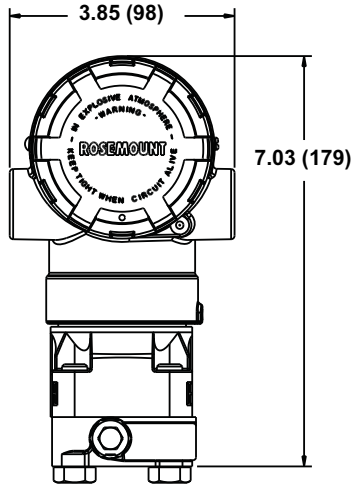

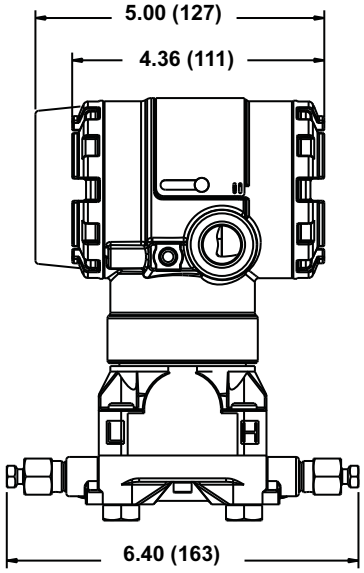

2051C Coplanar with Rosemount 305 Coplanar Integral Manifold

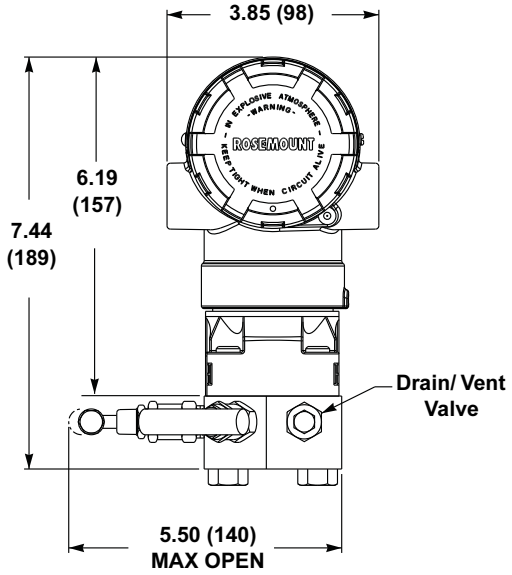

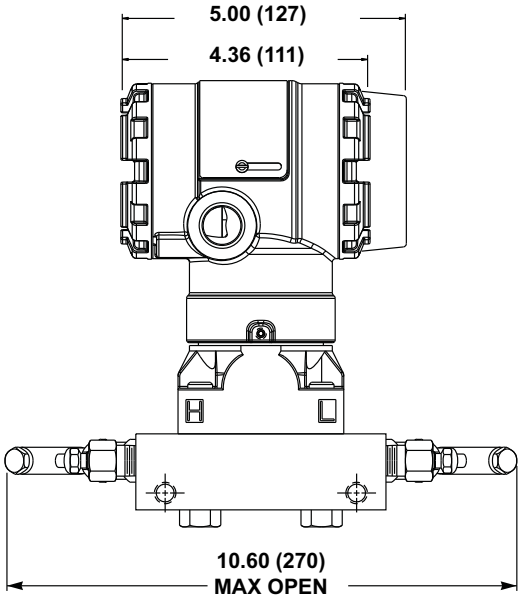

Coplanar Flange Mounting Configurations with Optional Bracket (B4) for 2-in. Pipe or Panel Mounting

PANEL MOUNTING

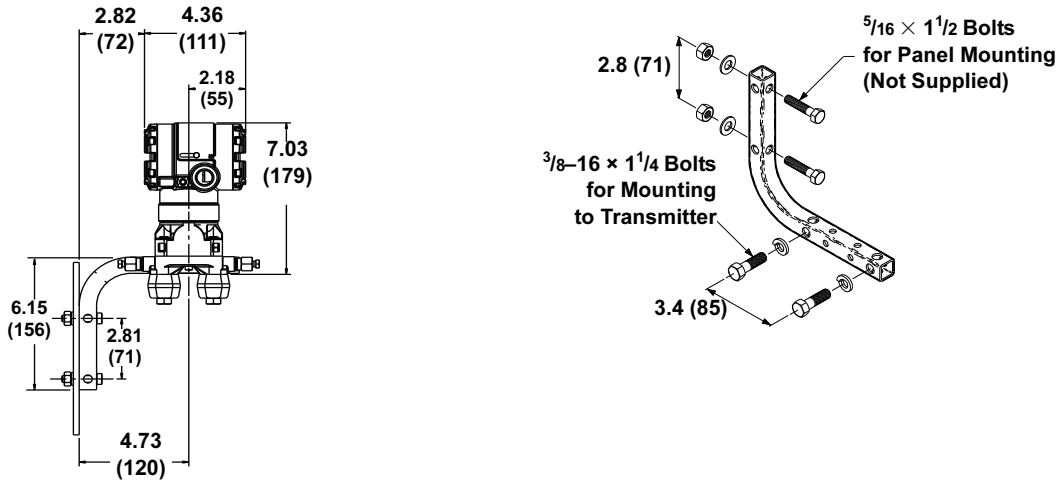

PIPE MOUNTING

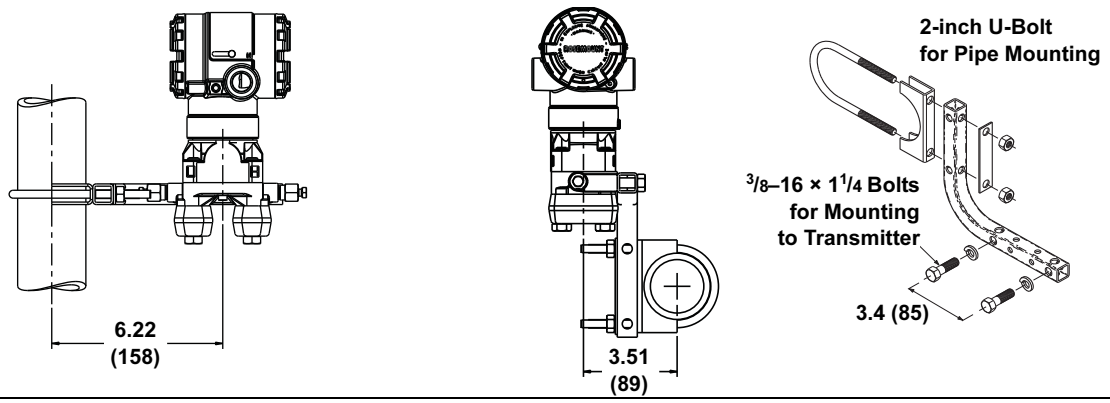

Dimensions are in inches (millimeters)

2051C Coplanar with Traditional Flange

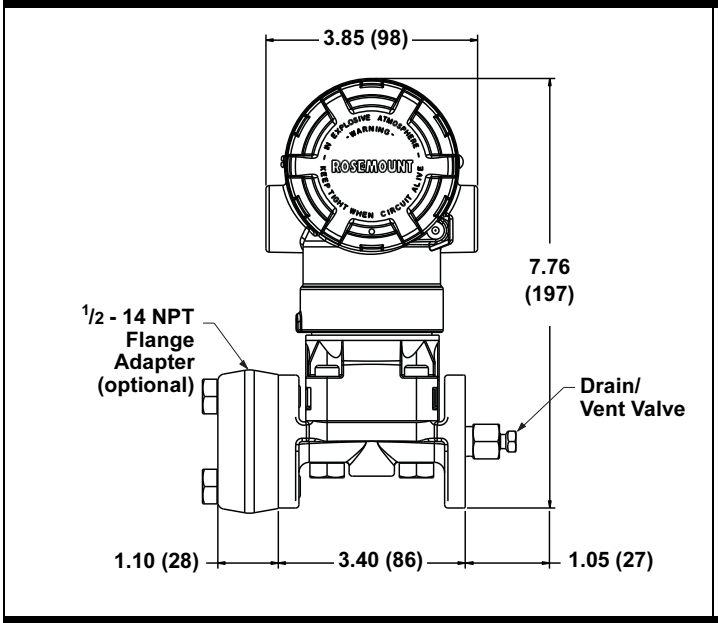

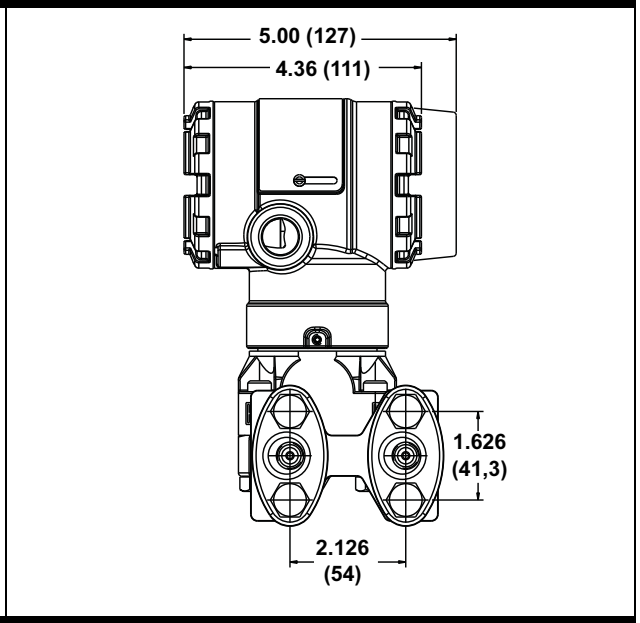

2051C Coplanar with Rosemount 305 Traditional Integral Manifold

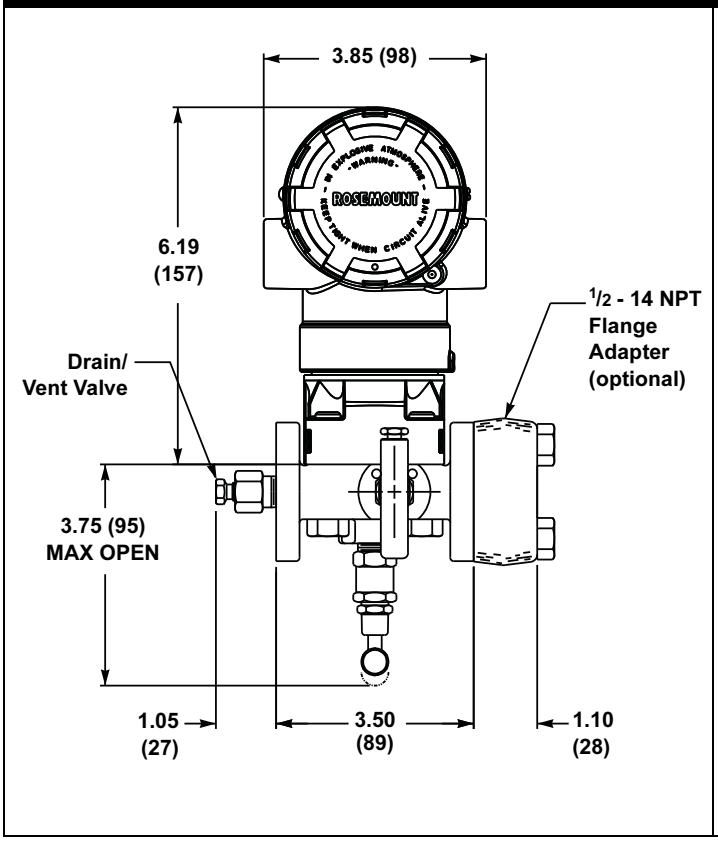

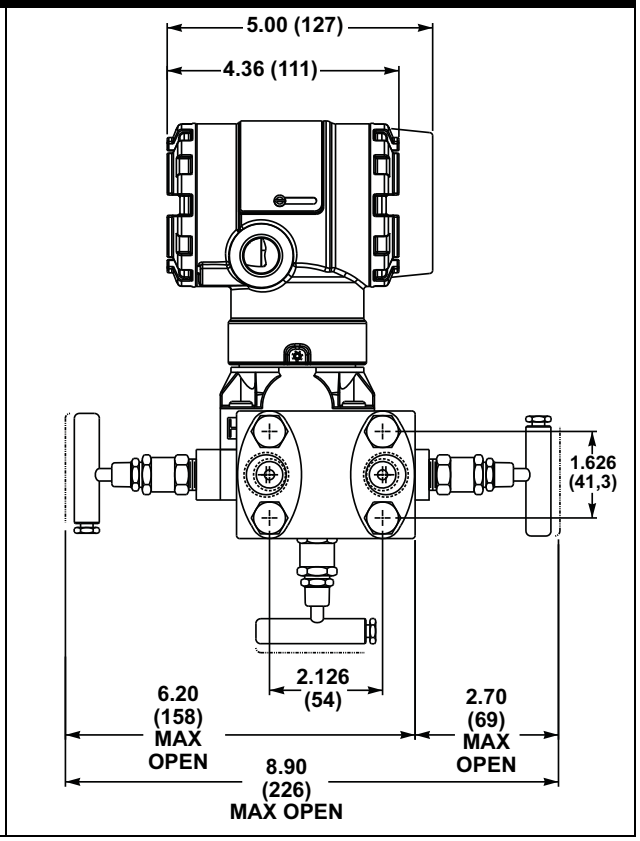

Traditional Flange Mounting Configurations with Optional Brackets for 2-in. Pipe or Panel Mounting

Panel Mount (Bracket Option B2 / B8)

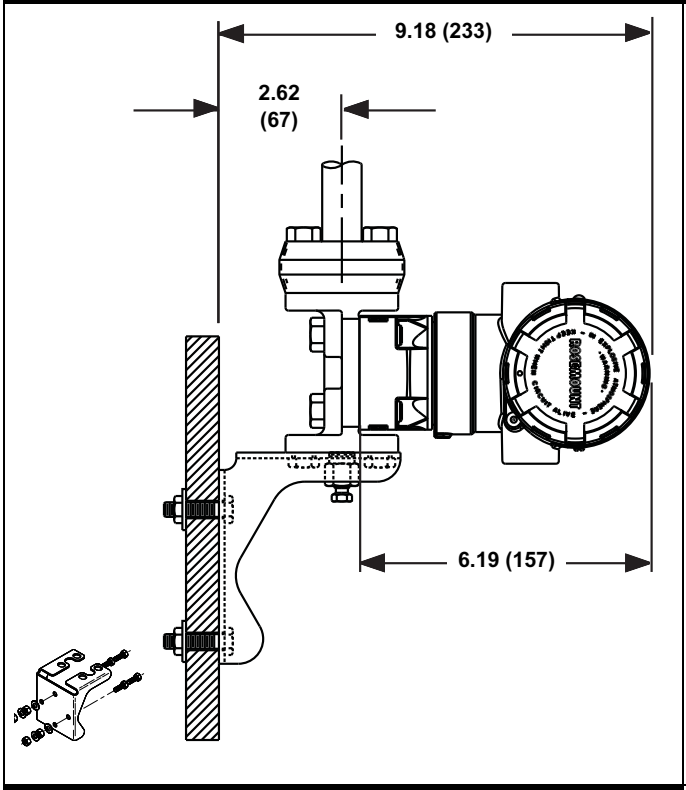

Pipe Mount (Bracket Option B3 / B9 / BC)

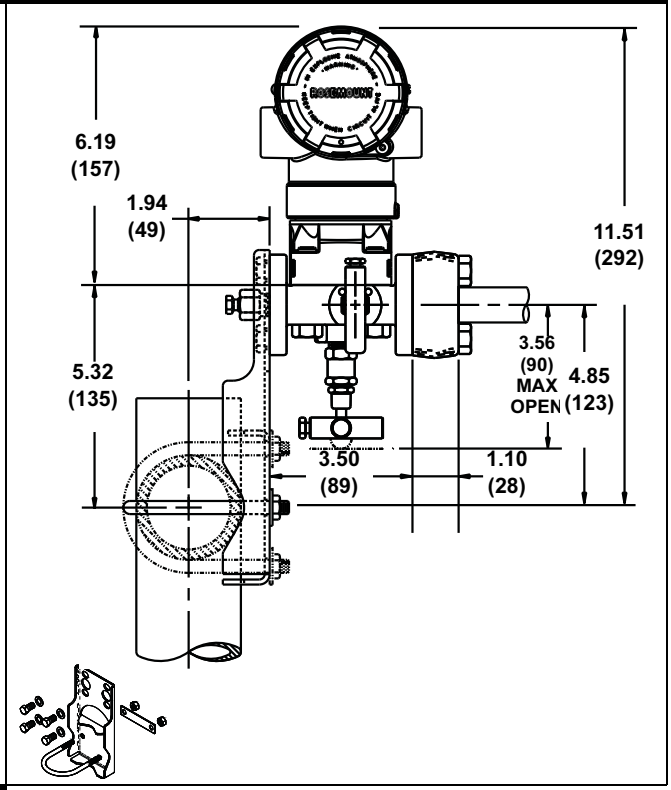

Pipe Mount (Bracket Option B1 / B7 / BA)

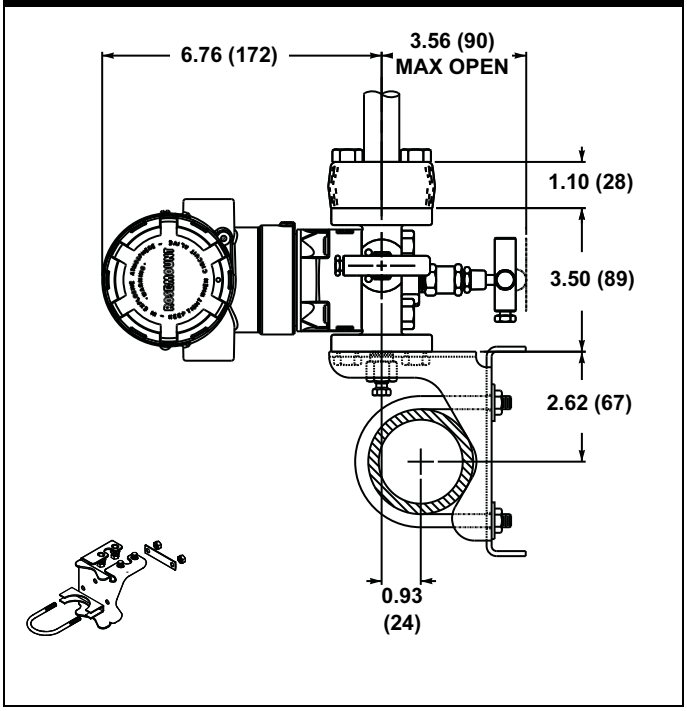

2051T Dimensional Drawings

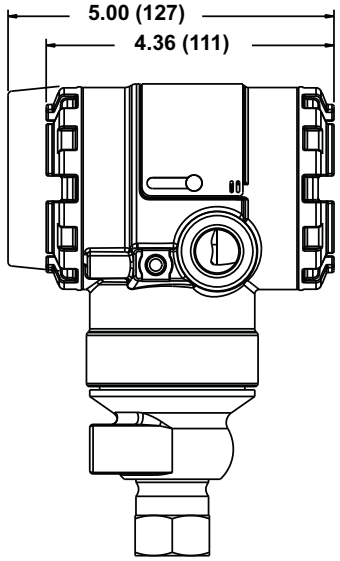

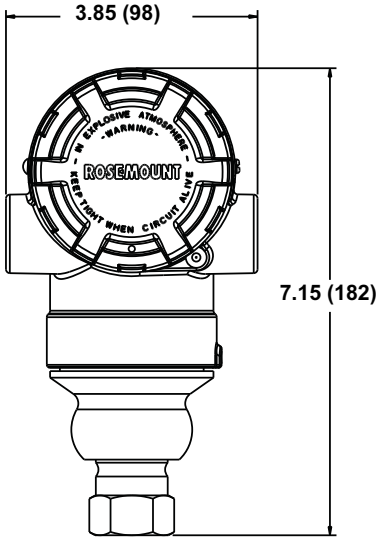

2051T with Rosemount 306 Integral Manifold

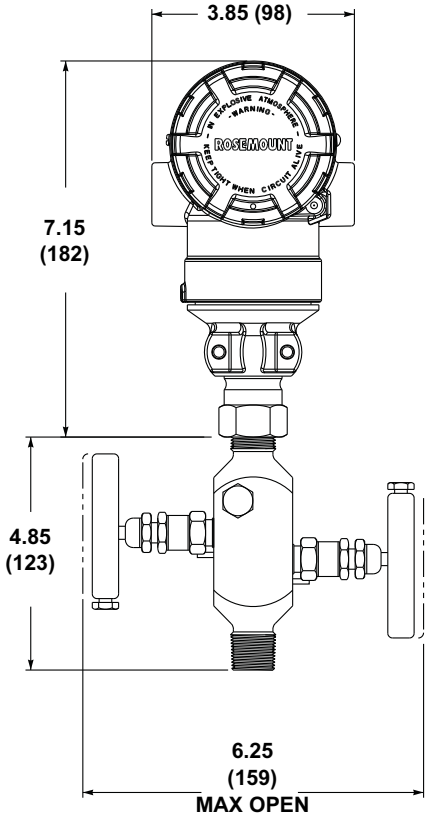

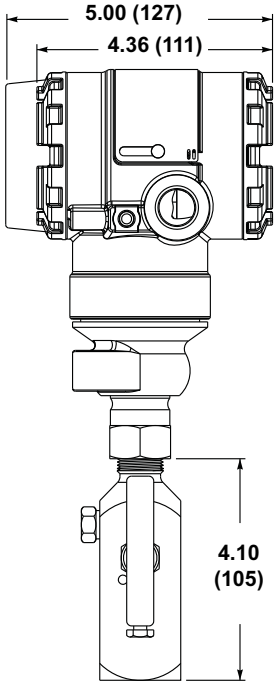

2051T Typical Mounting Configurations with Optional Mounting Bracket

Pipe Mounting

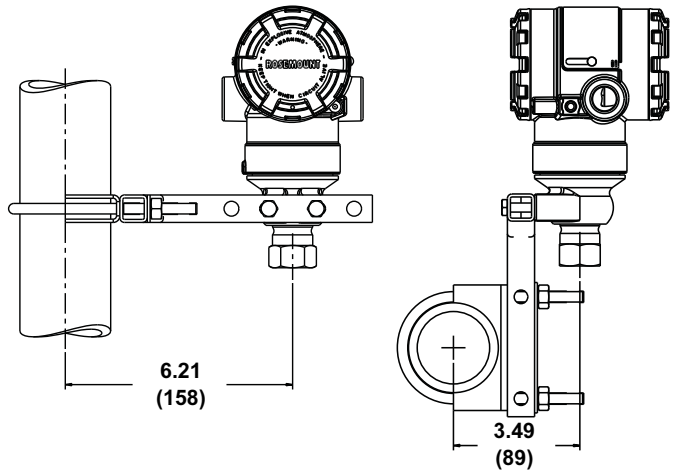

Panel Mounting

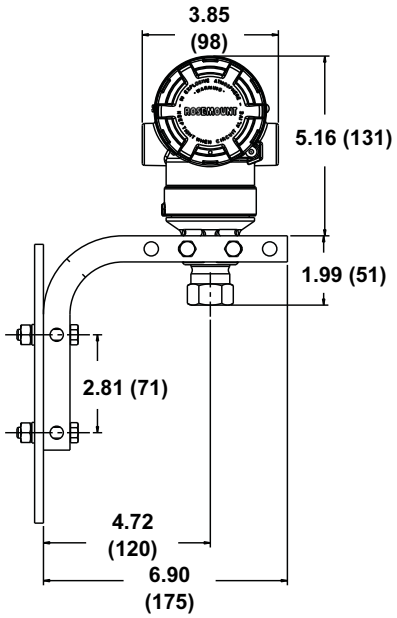

2051L Liquid Level

2-in. Flange Configuration (Flush Mount Only)

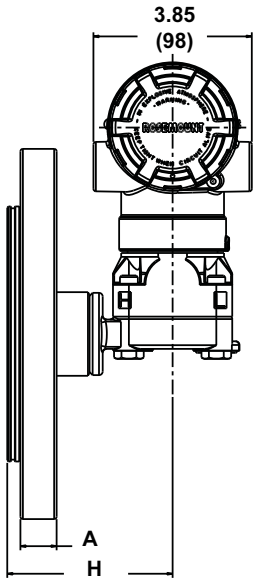

3- and 4-in. Flange Configuration

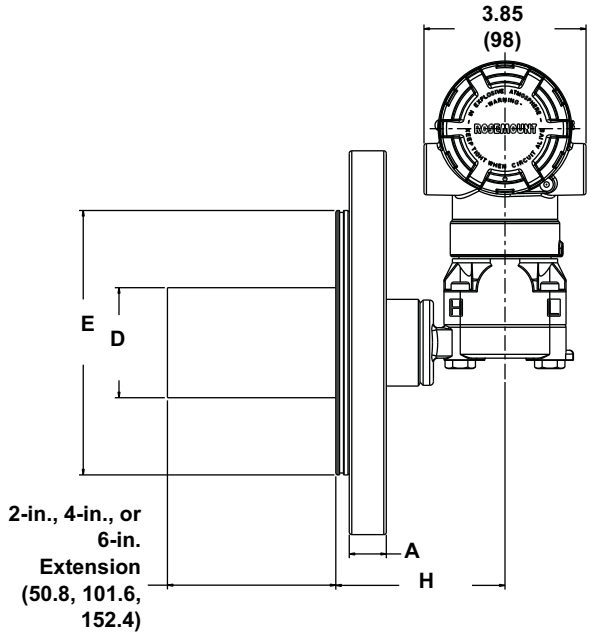

Optional Flushing Connection Ring (Lower Housing)

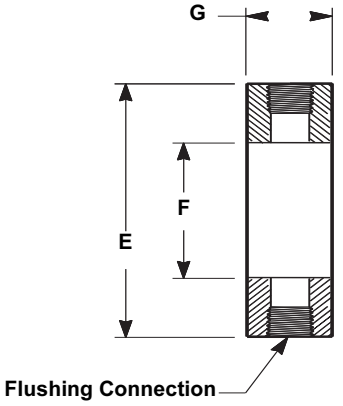

Diaphragm Assembly and Mounting Flange

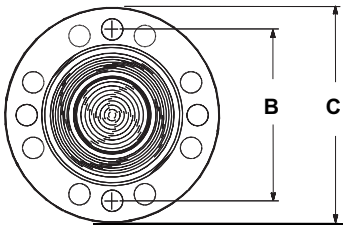

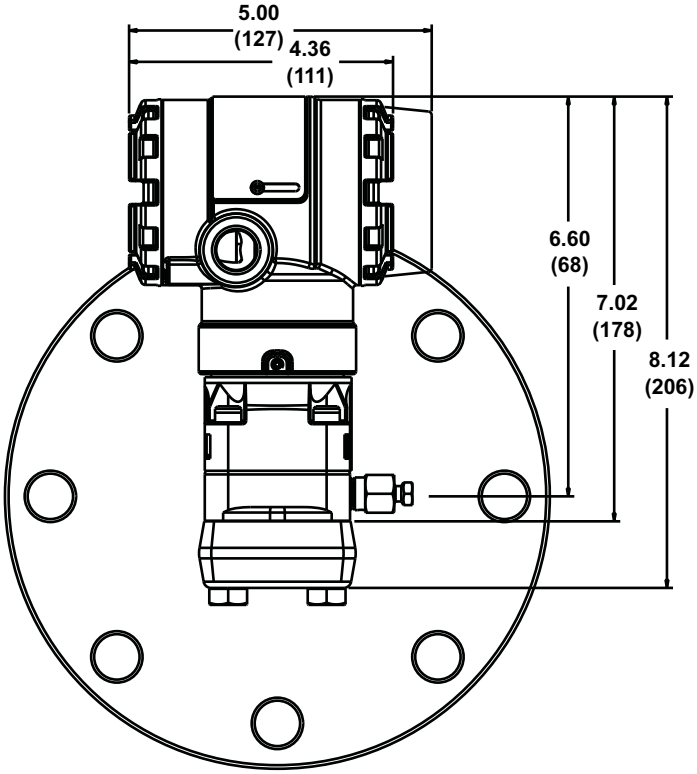

Table 2-1. 2051L Dimensional Specifications

Except where indicated, dimensions are in inches (millimeters).

Class	Pipe Size	Flange Thickness A	Bolt Circle Diameter B	Outside Diameter C	No. of Bolts	Bolt Hole Diameter	Extension Diameter[1] D	O.D. Gasket Surface E
ASME B16.5 (ANSI) 150	2 (51)	0.69 (18)	4.75 (121)	6.0 (152)	4	0.75 (19)	NA	3.6 (92)
	3 (76)	0.88 (22)	6.0 (152)	7.5 (191)	4	0.75 (19)	2.58 (66)	5.0 (127)
	4 (102)	0.88 (22)	7.5 (191)	9.0 (229)	8	0.75 (19)	3.5 (89)	6.2 (158)
ASME B16.5 (ANSI) 300	2 (51)	0.82 (21)	5.0 (127)	6.5 (165)	8	0.75 (19)	NA	3.6 (92)
	3 (76)	1.06 (27)	6.62 (168)	8.25 (210)	8	0.88 (22)	2.58 (66)	5.0 (127)
	4 (102)	1.19 (30)	7.88 (200)	10.0 (254)	8	0.88 (22)	3.5 (89)	6.2 (158)
DIN 2501 PN 10–40	DN 50	20 mm	125 mm	165 mm	4	18 mm	NA	4.0 (102)
DIN 2501 PN 25/40	DN 80	24 mm	160 mm	200 mm	8	18 mm	65 mm	5.4 (138)
	DN 100	24 mm	190 mm	235 mm	8	22 mm	89 mm	6.2 (158)

Class	Pipe Size	Process Side F	Lower Housing G		H
			1/4 NPT	1/2 NPT	
ASME B16.5 (ANSI) 150	2 (51)	2.12 (54)	0.97 (25)	1.31 (33)	5.65 (143)
	3 (76)	3.6 (91)	0.97 (25)	1.31 (33)	5.65 (143)
	4 (102)	3.6 (91)	0.97 (25)	1.31 (33)	5.65 (143)
ASME B16.5 (ANSI) 300	2 (51)	2.12 (54)	0.97 (25)	1.31 (33)	5.65 (143)
	3 (76)	3.6 (91)	0.97 (25)	1.31 (33)	5.65 (143)
	4 (102)	3.6 (91)	0.97 (25)	1.31 (33)	5.65 (143)
DIN 2501 PN 10–40	DN 50	2.4 (61)	0.97 (25)	1.31 (33)	5.65 (143)
DIN 2501 PN 25/40	DN 80	3.6 (91)	0.97 (25)	1.31 (33)	5.65 (143)
	DN 100	3.6 (91)	0.97 (25)	1.31 (33)	5.65 (143)

(1) Tolerances are -0.020 and +0.040 (-0,51 and +1,02)

Mount the Transmitter

Process Flange Orientation

Mount the process flanges with sufficient clearance for process connections. For safety reasons, place the drain/vent valves so the process fluid is directed away from possible human contact when the vents are used. In addition, consider the accessibility for a testing or calibration input.

NOTE
Most transmitters are calibrated in the horizontal position. Mounting the transmitter in any other position will shift the zero point to the equivalent amount of liquid head pressure caused by the varied mounting position. To reset zero point, refer to “Sensor Trim” on page 4-5.

Terminal Side of Electronics Housing

Mount the transmitter so the terminal side is accessible. Clearance of 0.75-in. (19 mm) is required for cover removal. Use a conduit plug on the unused side of the conduit opening.

Circuit Side of Electronics Housing

Provide 0.75 in. (19 mm) of clearance for units without an LCD display. Provide 3 in. (76 mm) of clearance for units installed with LCD.

Cover Installation

Always ensure a proper seal by installing the electronics housing covers so that metal contacts metal. Use Rosemount o-rings.

Mounting Brackets

Rosemount 2051 Transmitters may be panel-mounted or pipe-mounted through an optional mounting bracket. Refer to Table 2-2 for the complete offering and see Figure 2-2 through Figure 2-5 on pages 2-13 and 2-14 for dimensions and mounting configurations.

Table 2-2. Mounting Brackets

2051 Brackets										
	Process Connections			Mounting			Materials			
Option Code	Coplanar	In-Line	Traditional	Pipe Mount	Panel Mount	Flat Panel Mount	CS Bracket	SST Bracket	CS Bolts	SST Bolts
B4	X	X		X	X	X		X		X
B1			X	X			X		X	
B2			X		X		X		X	
B3			X			X	X		X	
B7			X	X			X			X
B8			X		X		X			X
B9			X			X	X			X
BA			X	X				X		X
BC			X			X		X		X

Figure 2-2. Mounting Bracket Option Code B4

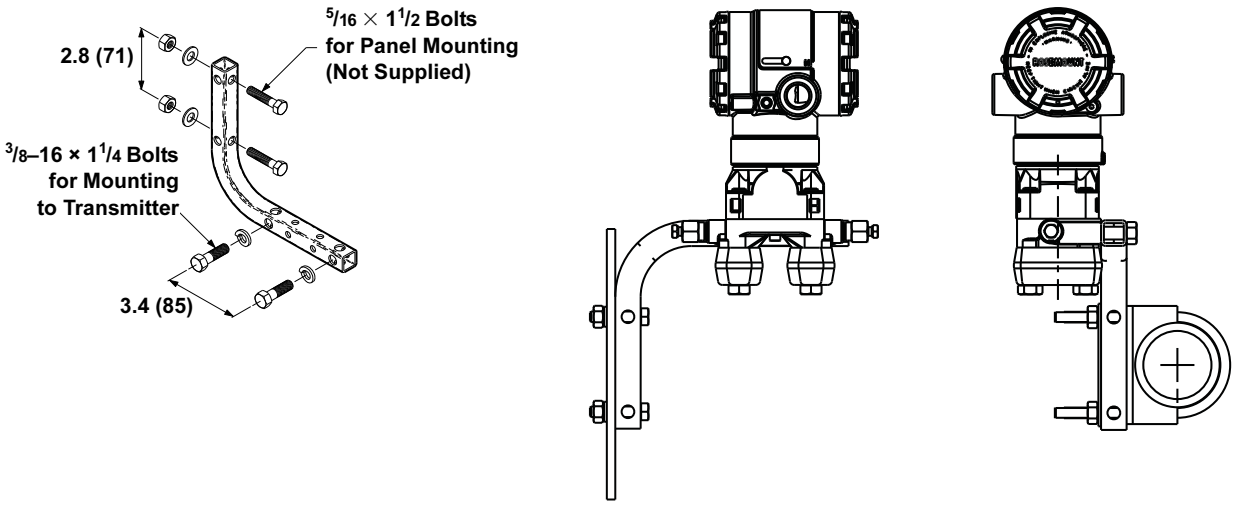

Figure 2-3. Mounting Bracket Option Codes B1, B7, and BA

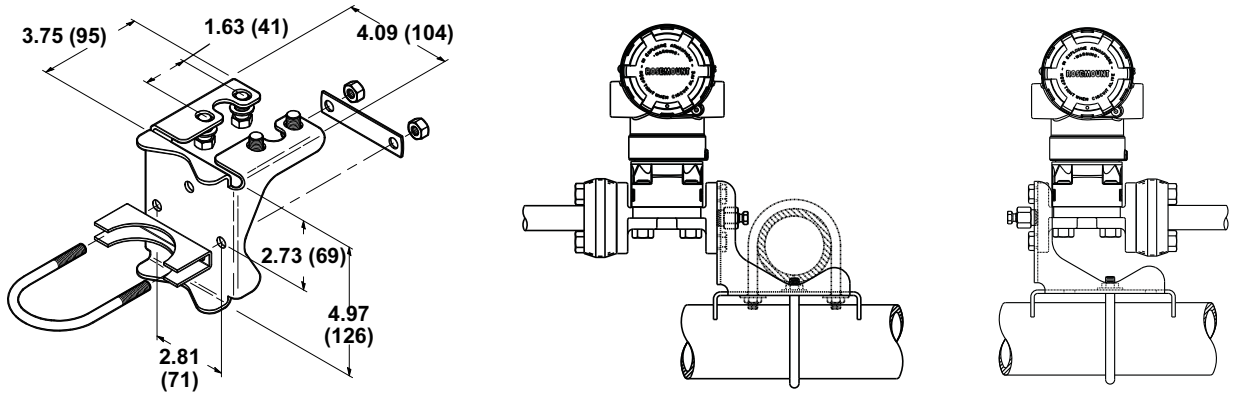

Figure 2-4. Panel Mounting Bracket Option Codes B2 and B8

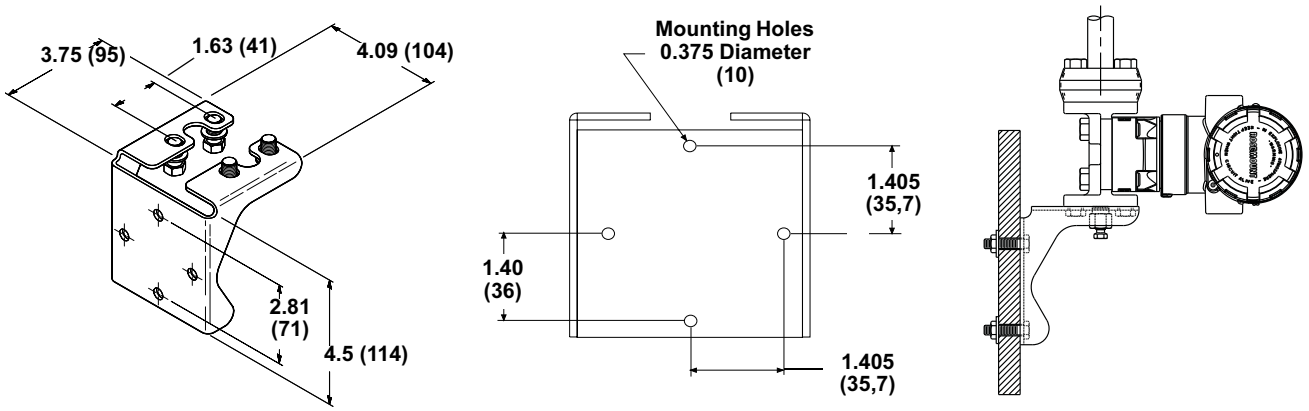

Figure 2-5. Flat Mounting Bracket Option Codes B3 and BC

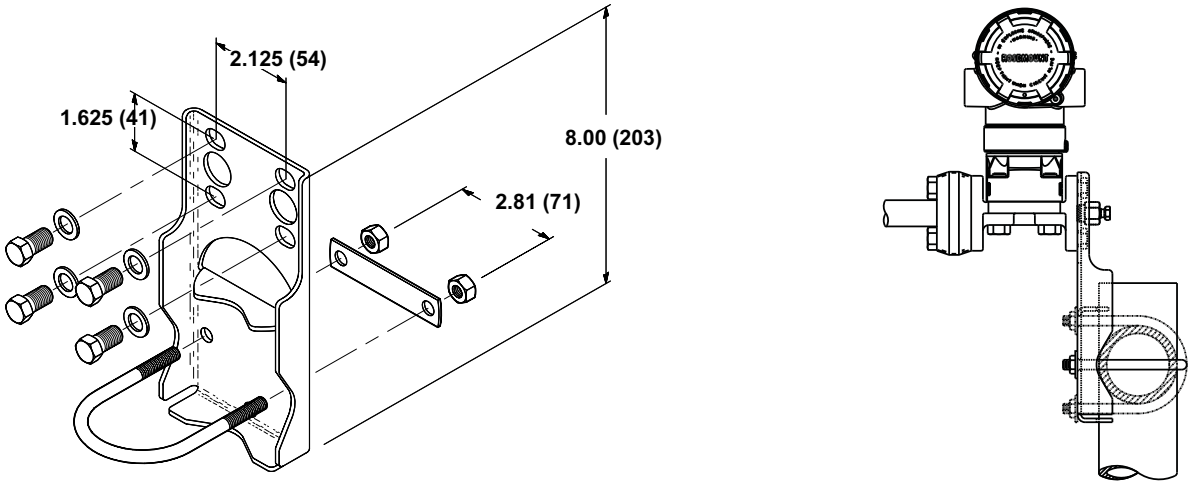

NOTE
Dimensions are in inches (millimeters).

Flange Bolts

The 2051 is shipped with a Coplanar flange installed with four 1.75-in. (44 mm) flange bolts. See Figure 2-6 and Figure 2-7 on pages 2-16 and 2-16. Stainless steel bolts are coated with a lubricant to ease installation. Carbon steel bolts do not require lubrication. No additional lubricant should be applied when installing either type of bolt. Bolts are identified by their head markings:

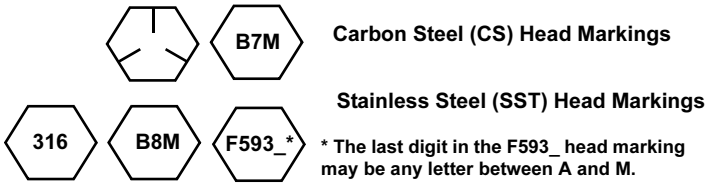

Bolt Installation

⚠ Only use bolts supplied with the 2051 or provided by Emerson Process Management as spare parts. When installing the transmitter to one of the optional mounting brackets, torque the bolts to 125 in-lb. (0,9 N-m). Use the following bolt installation procedure:

1. Finger-tighten the bolts.
2. Torque the bolts to the initial torque value using a crossing pattern.
3. Torque the bolts to the final torque value using the same crossing pattern.

Torque values for the flange and manifold adapter bolts are as follows:

Table 2-3. Bolt Installation Torque Values

Bolt Material	Initial Torque Value	Final Torque Value
CS-ASTM-A449 Standard	300 in.-lb (34 N-m)	650 in.-lb (73 N-m)
316 SST—Option L4	150 in.-lb (17 N-m)	300 in.-lb (34 N-m)
ASTM-A-193-B7M—Option L5	300 in.-lb (34 N-m)	650 in.-lb (73 N-m)
ASTM-A-193 Class 2, Grade B8M—Option L8	150 in.-lb (17 N-m)	300 in.-lb (34 N-m)

⚠ See “Safety Messages” on page 2-1 for complete warning information.

Figure 2-6. Traditional Flange Bolt Configurations

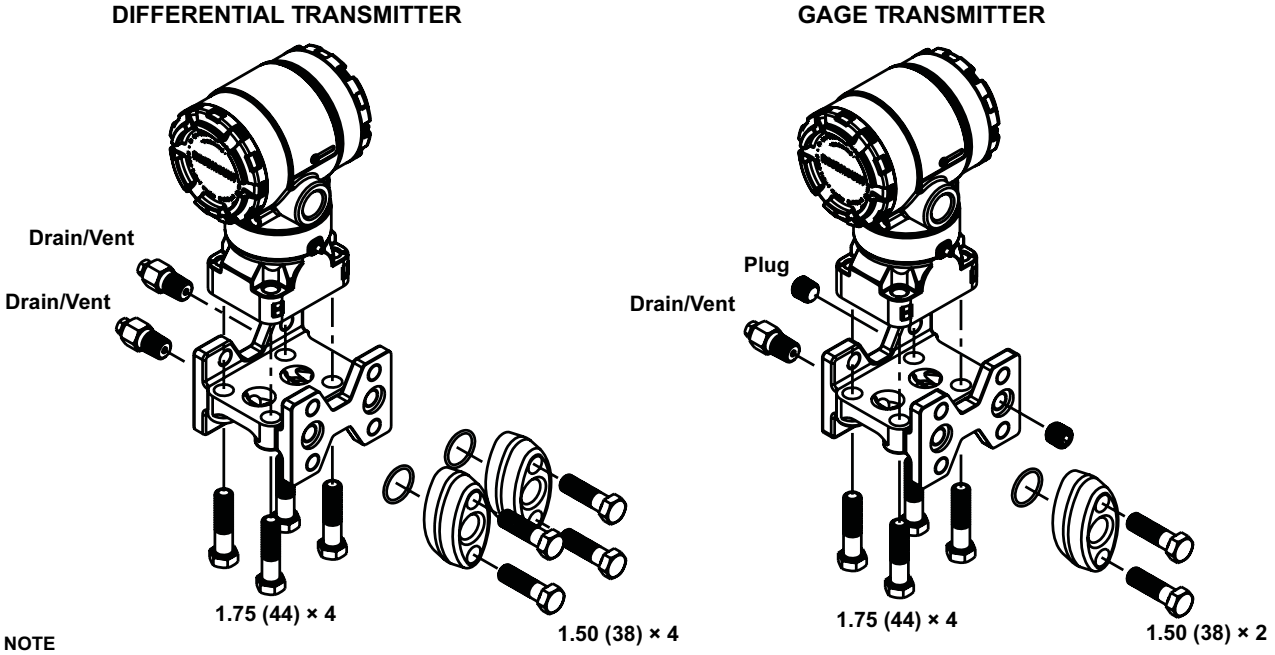

NOTE
Dimensions are in inches (millimeters).

Figure 2-7. Mounting Bolts and Bolt Configurations for Coplanar Flange

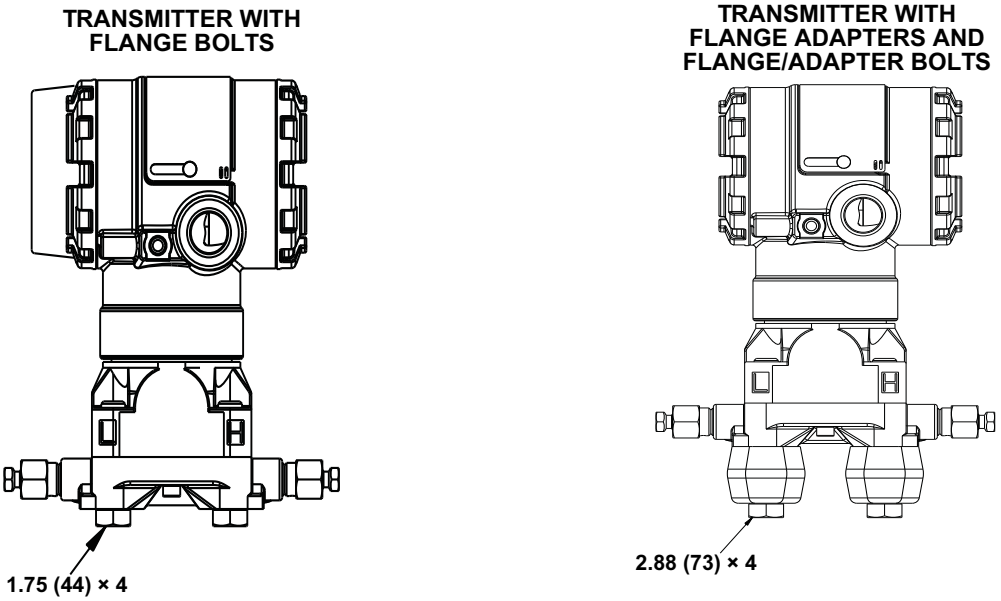

Description	Size in. (mm)
Flange Bolts	1.75 (44)
Flange/Adapter Bolts	2.88 (73)
Manifold/Flange Bolts	2.25 (57)

Note: Rosemount 2051T transmitters are direct mount and do not require bolts for process connection.

NOTE
Dimensions are in inches (millimeters).

Impulse Piping

The piping between the process and the transmitter must accurately transfer the pressure to obtain accurate measurements. There are six possible sources of impulse piping error: pressure transfer, leaks, friction loss (particularly if purging is used), trapped gas in a liquid line, liquid in a gas line, and density variations between the legs.

The best location for the transmitter in relation to the process pipe is dependent on the process. Use the following guidelines to determine transmitter location and placement of impulse piping:

- Keep impulse piping as short as possible.
- For liquid service, slope the impulse piping at least 1 in./foot (8 cm/m) upward from the transmitter toward the process connection.
- For gas service, slope the impulse piping at least 1 in./foot (8 cm/m) downward from the transmitter toward the process connection.
- Avoid high points in liquid lines and low points in gas lines.
- Make sure both impulse legs are the same temperature.
- Use impulse piping large enough to avoid friction effects and blockage.
- Vent all gas from liquid piping legs.
- When using a sealing fluid, fill both piping legs to the same level.
- When purging, make the purge connection close to the process taps and purge through equal lengths of the same size pipe. Avoid purging through the transmitter.
- Keep corrosive or hot (above 250 °F [121 °C]) process material out of direct contact with the sensor module and flanges.
- Prevent sediment deposits in the impulse piping.
- Maintain equal leg of head pressure on both legs of the impulse piping.
- Avoid conditions that might allow process fluid to freeze within the process flange.

Mounting Requirements

Impulse piping configurations depend on specific measurement conditions. Refer to Figure 2-8 for examples of the following mounting configurations:

Liquid Flow Measurement

- Place taps to the side of the line to prevent sediment deposits on the process isolators.
- Mount the transmitter beside or below the taps so gases vent into the process line.
- Mount drain/vent valve upward to allow gases to vent.

Gas Flow Measurement

- Place taps in the top or side of the line.
- Mount the transmitter beside or above the taps so to drain liquid into the process line.

Steam Flow Measurement

- Place taps to the side of the line.
- Mount the transmitter below the taps to ensure that impulse piping will remain filled with condensate.
- In steam service above 250 °F (121 °C), fill impulse lines with water to prevent steam from contacting the transmitter directly and to ensure accurate measurement start-up.

NOTE
For steam or other elevated temperature services, it is important that temperatures at the process connection do not exceed the transmitter's process temperature limits. See "Process Temperature Limits" on page A-7 for details.

Figure 2-8. Installation Examples

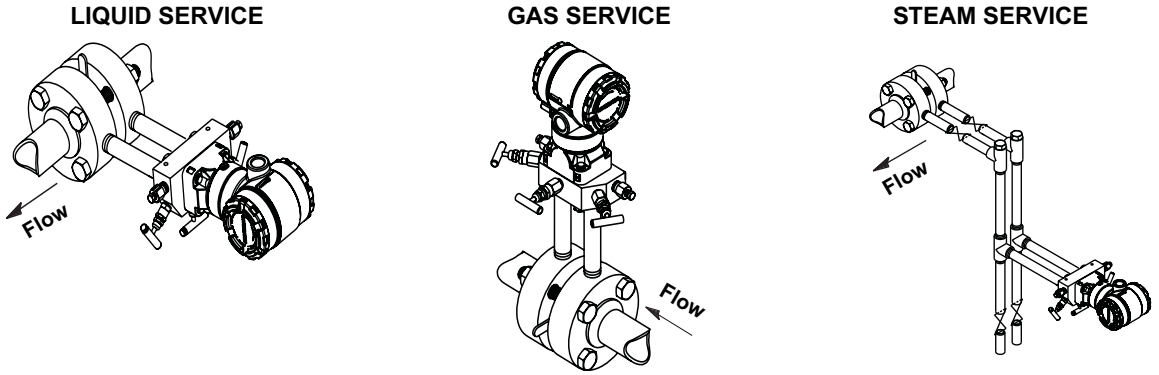

Process Connections

Coplanar or Traditional Process Connection

⚠ Install and tighten all four flange bolts before applying pressure, or process leakage will result. When properly installed, the flange bolts will protrude through the top of the sensor module housing. Do not attempt to loosen or remove the flange bolts while the transmitter is in service.

⚠ **Flange Adaptors:**

Rosemount 2051DP and GP process connections on the transmitter flanges are 1/4–18 NPT. Flange adapters are available with standard 1/2–14 NPT Class 2 connections. The flange adapters allow users to disconnect from the process by removing the flange adapter bolts. Use plant-approved lubricant or sealant when making the process connections. Refer to Dimensional Drawings on page 2-5 for the distance between pressure connections. This distance may be varied ±1/8 in. (3.2 mm) by rotating one or both of the flange adapters.

To install adapters to a Coplanar flange, perform the following procedure:

1. Remove the flange bolts.
2. Leaving the flange in place, move the adapters into position with the o-ring installed.
3. Clamp the adapters and the Coplanar flange to the transmitter sensor module using the larger of the bolts supplied.
4. Tighten the bolts. Refer to “Flange Bolts” on page 2-15 for torque specifications.

Whenever you remove flanges or adapters, visually inspect the PTFE o-rings. Replace with o-ring designed for Rosemount transmitter if there are any signs of damage, such as nicks or cuts. Undamaged o-rings may be reused. If you replace the o-rings, retorque the flange bolts after installation to compensate for cold flow. Refer to the process sensor body reassembly procedure in Section 5: Troubleshooting.

O-rings:

The two styles of Rosemount flange adapters (Rosemount 1151 and Rosemount 3051/2051/2024/3095) each require a unique O-ring (see Figure 2-9). Use only the O-ring designed for the corresponding flange adaptor.

Figure 2-9. O-Rings.

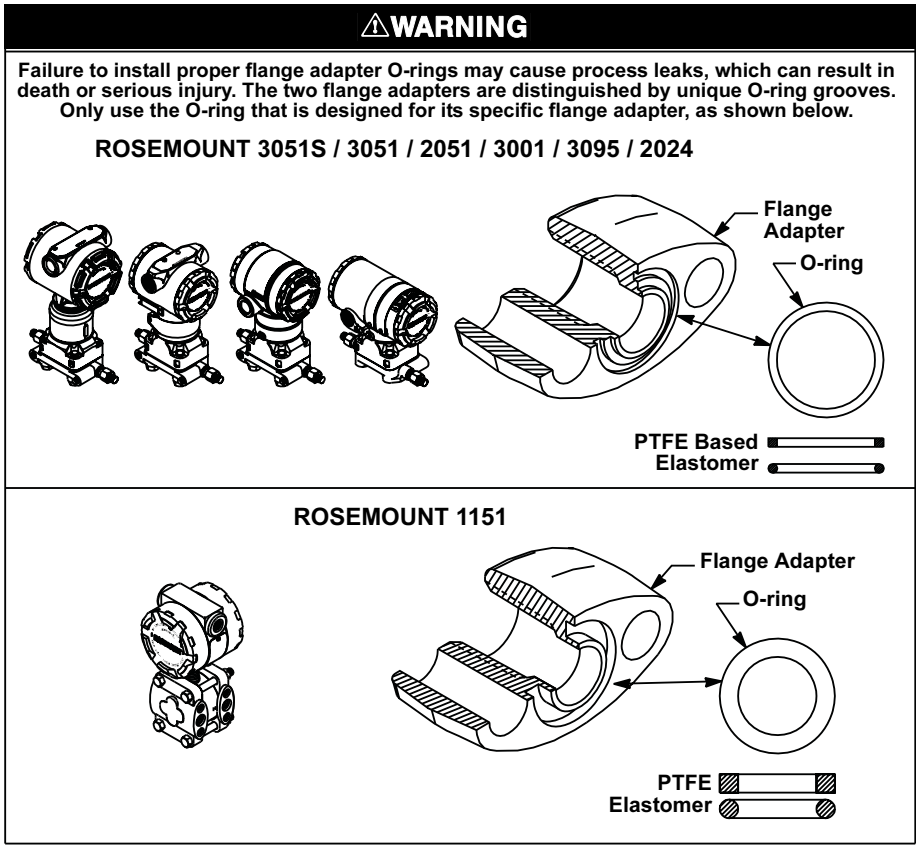

⚠ When compressed, PTFE O-rings tend to “cold flow,” which aids in their sealing capabilities.

NOTE
PTFE O-rings should be replaced if the flange adapter is removed.

Inline Process Connection

⚠WARNING

Do not apply torque directly to the sensor module. Rotation between the sensor module and the process connection can damage the electronics. To avoid damage, apply torque only to the hex-shaped process connection.

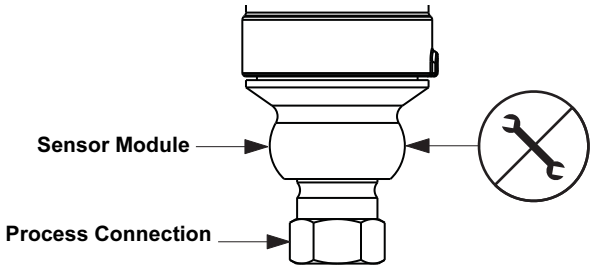

Housing Rotation

The electronics housing can be rotated up to 180 degrees in either direction to improve field access, or to better view the optional LCD display. To rotate the housing, perform the following procedure:

1. Loosen the housing rotation set screw using a $\frac{5}{64}$-in. hex wrench.
2. Turn the housing left or right up to 180° from its original position. Over rotating will damage the transmitter.
3. Retighten the housing rotation set screw.

Figure 2-10. Housing Rotation

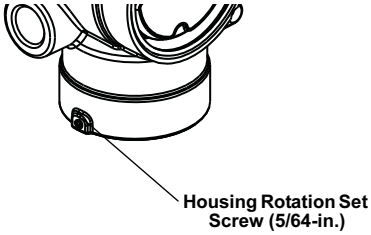

LCD Display

Transmitters ordered with the LCD option are shipped with the display installed. Installing the display on an existing 2051 transmitter requires a small instrument screwdriver.

Figure 2-11. LCD Display

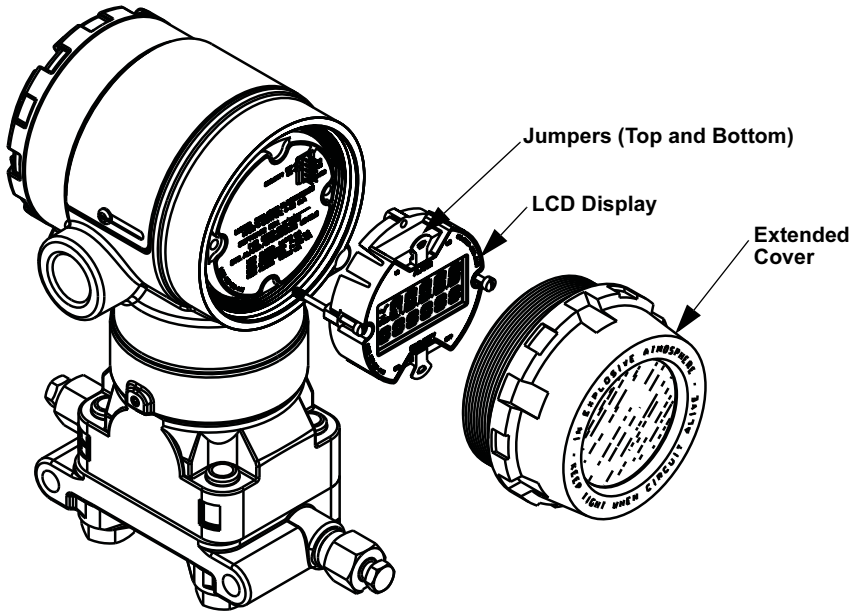

Configure Security and Alarm

Security (Write Protect)

There are three security methods with the Rosemount 2051 transmitter:

1. Security Jumper: prevents all writes to transmitter configuration.
2. Local Keys (Local Zero and Span) Software Lock Out: prevents changes to transmitter range points via local zero and span adjustment keys. With local keys security enabled, changes to configuration are possible via HART.
3. Physical Removal of Local Keys (Local Zero and Span) Magnetic Buttons: removes ability to use local keys to make transmitter range point adjustments. With local keys security enabled, changes to configuration are possible via HART.

NOTE
The Local Keys (Local Zero and Span Adjustments) are optional (option code D4 in model number). If the Adjustments are not ordered on the transmitter, options 2 and 3 above are not valid security method options.

You can prevent changes to the transmitter configuration data with the write protection jumper. Security is controlled by the security (write protect) jumper located on the electronics board or LCD display. Position the jumper on the transmitter circuit board in the “ON” position to prevent accidental or deliberate change of configuration data.

If the transmitter write protection jumper is in the “ON” position, the transmitter will not accept any “writes” to its memory. Configuration changes, such as digital trim and reranging, cannot take place when the transmitter security is on.

NOTE
If the security jumper is not installed, the transmitter will continue to operate in the security OFF configuration.

Configuring Transmitter Security and Alarm Jumper Procedure

To reposition the jumpers, follow the procedure described below.

1. Do not remove the transmitter covers in explosive atmospheres when the circuit is live. If the transmitter is live, set the loop to manual and remove power.
2. ⚠ Remove the housing cover opposite the field terminal side. Do not remove the transmitter covers in explosive atmospheres when the circuit is live.
3. Reposition the jumpers as desired.
   - Figure 2-12 shows the jumper positions for the 4-20 mA HART Transmitter.
   - Figure 2-13 shows the jumper positions for the 1-5 HART Vdc Low Power Transmitter.
4. ⚠ Reattach the transmitter cover. Always ensure a proper seal by installing the electronics housing covers so that metal contacts metal to meet explosion-proof requirements.

Figure 2-12. Electronics Board

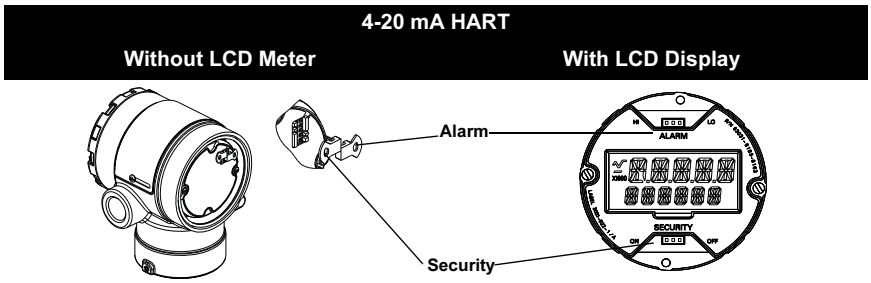

Figure 2-13. Low Power Transmitter Electronics Boards

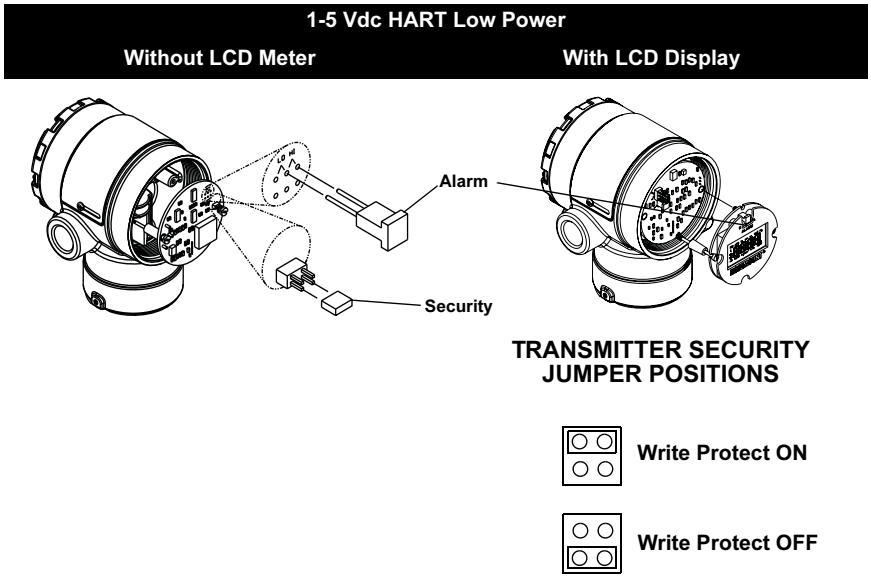

NOTE
Security jumper not installed = Not Write Protected
Alarm jumper not installed = High Alarm

ELECTRICAL CONSIDERATIONS

NOTE
Make sure all electrical installation is in accordance with national and local code requirements.

Conduit Installation

⚠CAUTION

If all connections are not sealed, excess moisture accumulation can damage the transmitter. Make sure to mount the transmitter with the electrical housing positioned downward for drainage. To avoid moisture accumulation in the housing, install wiring with a drip loop, and ensure the bottom of the drip loop is mounted lower than the conduit connections or the transmitter housing.

Recommended conduit connections are shown in Figure 2-14.

Figure 2-14. Conduit Installation Diagrams.

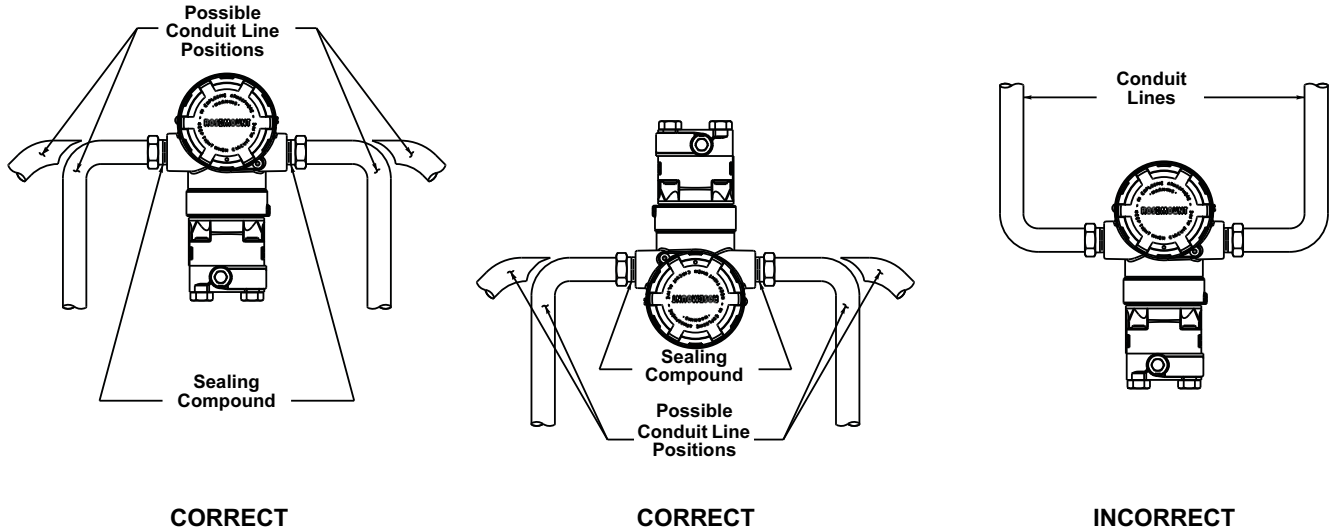

Wiring

⚠CAUTION

Do not connect the power signal wiring to the test terminals. Voltage may burn out the reverse-polarity protection diode in the test connection.

NOTE
Use shielded twisted pairs to yield best results. To ensure proper communication, use 24 AWG or larger wire, and do not exceed 5000 feet (1500 meters).

Figure 2-15. 4-20 mA HART wiring

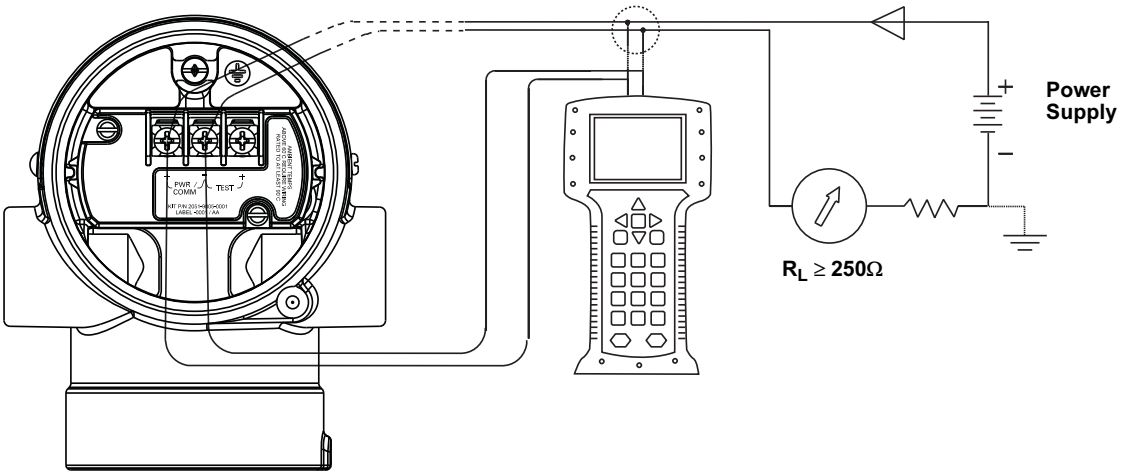

Figure 2-16. 1-5 Vdc Low Power wiring

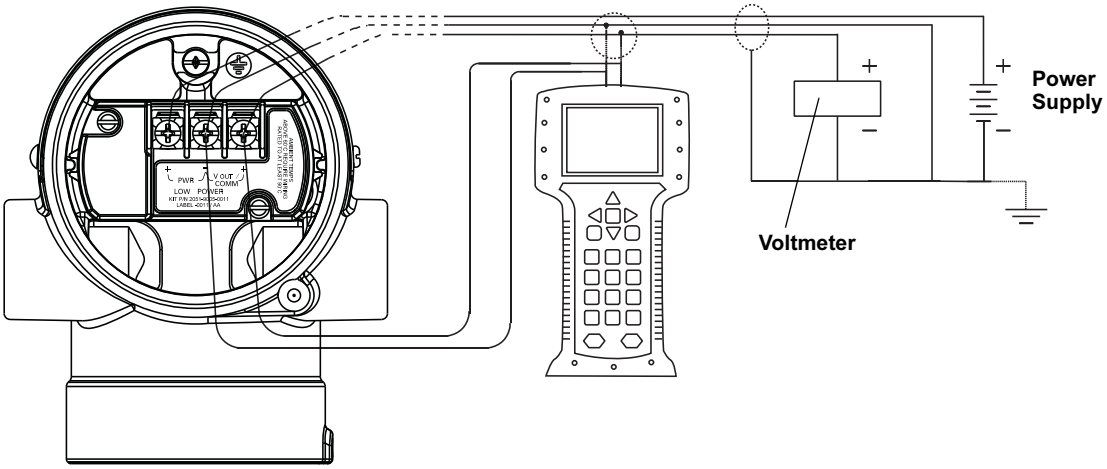

Perform the following procedure to make wiring connections:

1. Remove the housing cover on terminal compartment side. Do not remove the cover in explosive atmospheres when the circuit is live. Signal wiring supplies all power to the transmitter.
2. a. For 4-20 mA HART output, connect the positive lead to the terminal marked (+) and the negative lead to the terminal marked (pwr/comm -). Do not connect powered signal wiring to the test terminals. Power could damage the test diode.

   b. For 1-5 Vdc HART Low Power output, connect the positive lead to the terminal marked (+ pwr) and the negative lead to the terminal marked (pwr -). Connect signal lead to V_{out} / comm +.
3. Plug and seal unused conduit connection on the transmitter housing to avoid moisture accumulation in the terminal side. Install wiring with a drip loop. Arrange the drip loop so the bottom is lower than the conduit connections and the transmitter housing.

Power Supply for 4-20 mA HART

Transmitter operates on 10.5 - 42.4 Vdc. The dc power supply should provide power with less than two percent ripple.

NOTE
A minimum loop resistance of 250 ohms is required to communicate with a HART Communicator. If a single power supply is used to power more than one 2051 transmitter, the power supply used, and circuitry common to the transmitters, should not have more than 20 ohms of impedance at 1200 Hz.

Figure 2-17. Load Limitation

Maximum Loop Resistance = 43.5 * (Power Supply Voltage – 10.5)

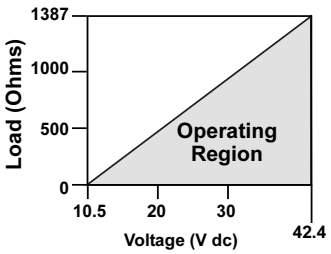

The HART communicator requires a minimum loop resistance of 250Ω for communication.

The total resistance load is the sum of the resistance of the signal leads and the load resistance of the controller, indicator, and related pieces. Note that the resistance of intrinsic safety barriers, if used, must be included.

Power Supply for 1-5 Vdc HART Low Power

Low power transmitters operate on 9–28 Vdc. The dc power supply should provide power with less than two percent ripple. The V_{out} load should be 100 kΩ or greater.

See “Safety Messages” on page 2-1 for complete warning information.

Transient Protection Terminal Block

The transmitter will withstand electrical transients of the energy level usually encountered in static discharges or induced switching transients. However, high-energy transients, such as those induced in wiring from nearby lightning strikes, can damage the transmitter.

The transient protection terminal block can be ordered as an installed option (Option Code T1 in the transmitter model number) or as a spare part to retrofit existing 2051 transmitters in the field. See “Spare Parts” on page A-38 for spare part numbers. The lightning bolt symbol shown in Figure 2-18 and Figure 2-19 identifies the transient protection terminal block.

Figure 2-18. 4-20 mA HART wiring with transient protection

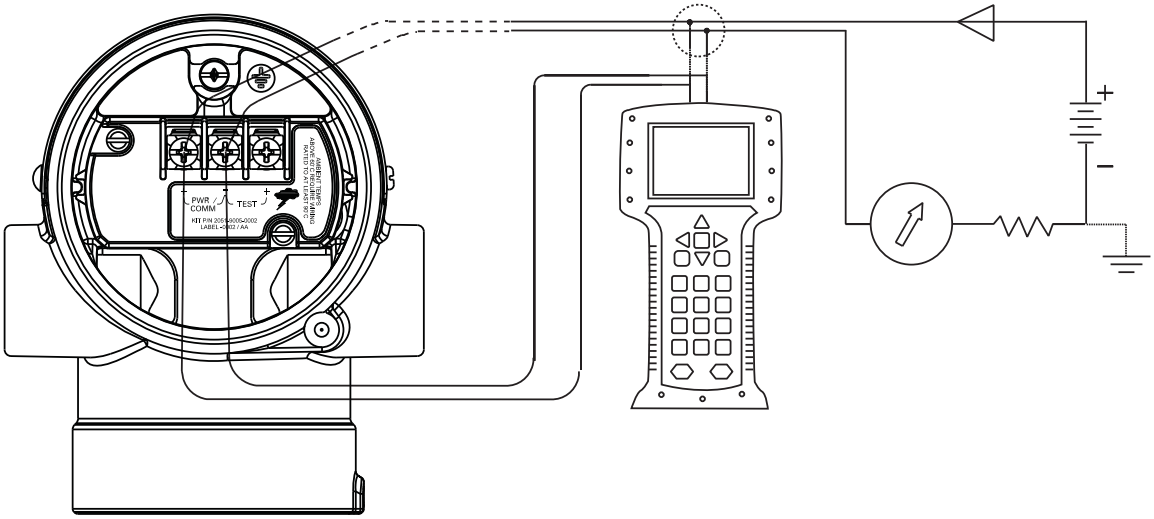

Figure 2-19. 1-5 Vdc Low Power wiring with transient protection

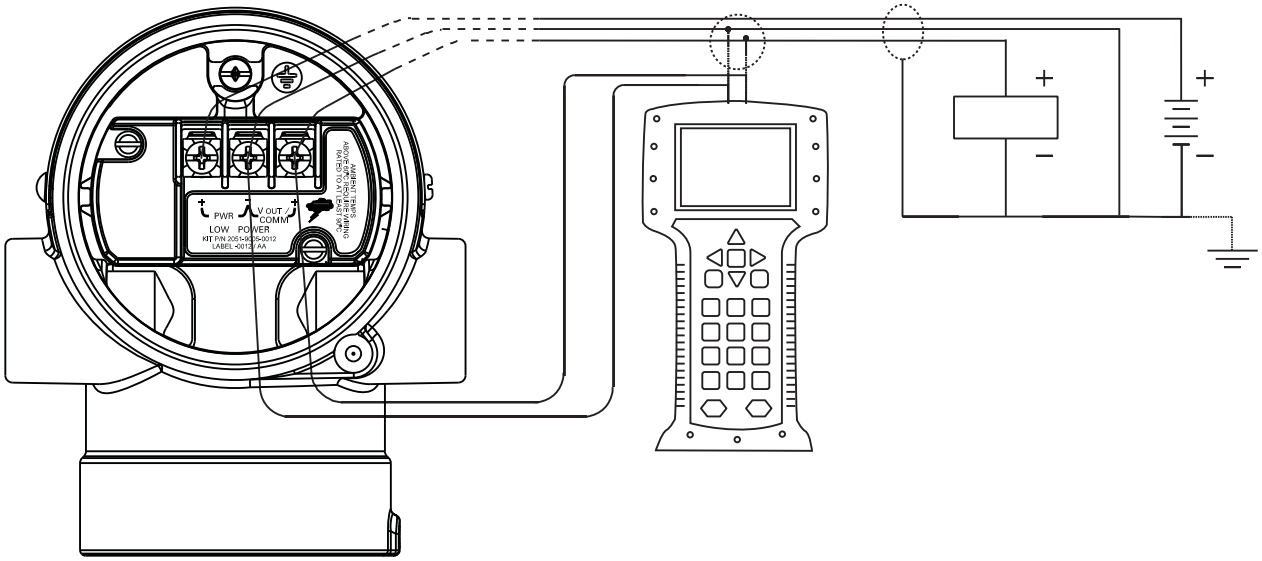

NOTE
The transient protection terminal block does not provide transient protection unless the transmitter case is properly grounded. Use the guidelines to ground the transmitter case. Refer to page 2-29.

Do not run the transient protection ground wire with signal wiring as the ground wire may carry excessive current if a lightning strike occurs.

Grounding

⚠ Use the following techniques to properly ground the transmitter signal wiring and case:

Signal Wiring

Do not run signal wiring in conduit or open trays with power wiring or near heavy electrical equipment. It is important that the instrument cable shield be:

- Trimmed close and insulated from touching the transmitter housing
- Connected to the next shield if cable is routed through a junction box
- Connected to a good earth ground at the power supply end

For 4-20 mA HART output, the signal wiring may be grounded at any one point on the signal loop or may be left ungrounded. The negative terminal of the power supply is a recommended grounding point.

For 1-5 Vdc HART Low Power output, the power wires may be grounded at only one point or left ungrounded. The negative terminal of the power supply is a recommended grounding point.

Transmitter Case

Always ground the transmitter case in accordance with national and local electrical codes. The most effective transmitter case grounding method is a direct connection to earth ground with minimal impedance. Methods for grounding the transmitter case include:

- **Internal Ground Connection**: The Internal Ground Connection screw is inside the FIELD TERMINALS side of the electronics housing. This screw is identified by a ground symbol (⏚). The ground connection screw is standard on all Rosemount 2051 transmitters. Refer to Figure 2-20.
- **External Ground Assembly**: This assembly is included with the optional transient protection terminal block (Option Code T1), and it is included with various hazardous location certifications. The External Ground Assembly can also be ordered with the transmitter (Option Code V5), or as a spare part. See “Spare Parts” on page A-38. Refer to Figure 2-21 for location of the External Ground Screw.

Figure 2-20. Internal Ground Screw

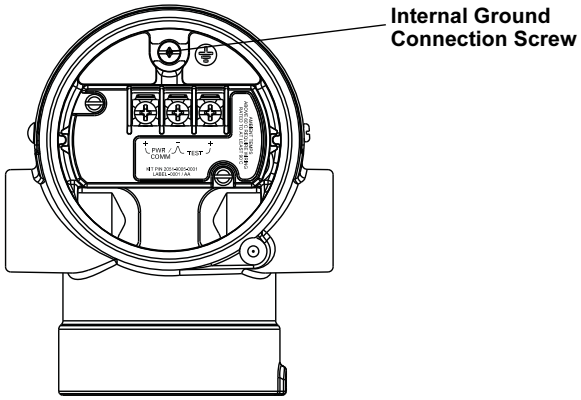

Figure 2-21. External Ground Assembly

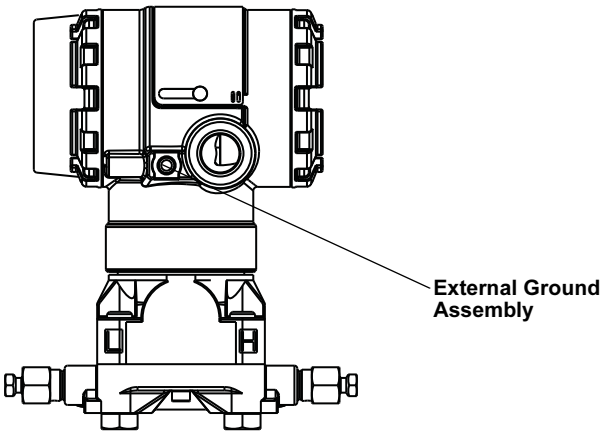

NOTE
Grounding the transmitter case via threaded conduit connection may not provide sufficient ground continuity.

HAZARDOUS LOCATIONS CERTIFICATIONS

⚠ Individual transmitters are clearly marked with a tag indicating the approvals they carry. Transmitters must be installed in accordance with all applicable codes and standards to maintain these certified ratings. Refer to “Hazardous Locations Certifications” on page B-2 for information on these approvals.

ROSEMOUNT 305, 306 AND 304 MANIFOLDS

The 305 Integral Manifold is available in two designs: Traditional and Coplanar. The traditional 305 Integral Manifold can be mounted to most primary elements with mounting adapters in the market today. The 306 Integral Manifold is used with the 2051T in-line transmitters to provide block-and-bleed valve capabilities of up to 10000 psi (690 bar).

Figure 2-22. Manifolds

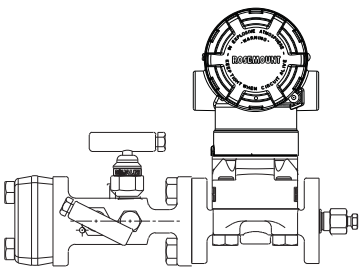

2051C AND 304 CONVENTIONAL

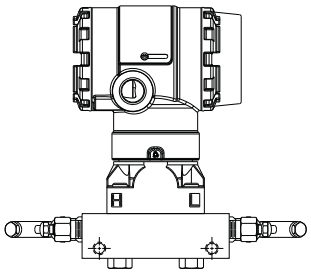

2051C AND 305 INTEGRAL COPLANAR

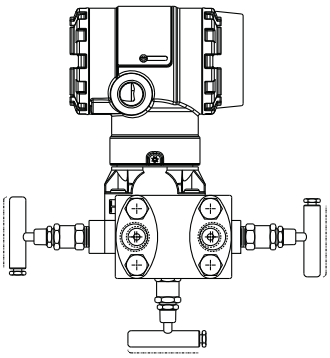

2051C AND 305 INTEGRAL TRADITIONAL

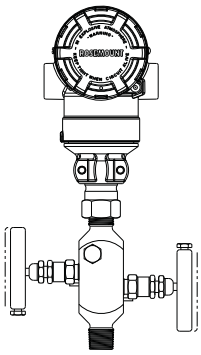

2051T AND 306 IN-LINE

Rosemount 305 Integral Manifold Installation Procedure

To install a 305 Integral Manifold to a 2051 transmitter:

⚠ 1. Inspect the PTFE sensor module o-rings. Undamaged o-rings may be reused. If the o-rings are damaged (if they have nicks or cuts, for example), replace with o-rings designed for Rosemount transmitter.

IMPORTANT
If replacing the o-rings, take care not to scratch or deface the o-ring grooves or the surface of the isolating diaphragm while you remove the damaged o-rings.

2. Install the Integral Manifold on the sensor module. Use the four 2.25-in. manifold bolts for alignment. Finger tighten the bolts, then tighten the bolts incrementally in a cross pattern to final torque value. See “Flange Bolts” on page 2-15 for complete bolt installation information and torque values. When fully tightened, the bolts should extend through the top of the sensor module housing.
3. If the PTFE sensor module o-rings have been replaced, the flange bolts should be re-tightened after installation to compensate for cold flow of the o-rings.

NOTE
Always perform a zero trim on the transmitter/manifold assembly after installation to eliminate mounting effects.

Rosemount 306 Integral Manifold Installation Procedure

The 306 Manifold is for use only with a 2051T In-line transmitter.

⚠ Assemble the 306 Manifold to the 2051T In-line transmitter with a thread sealant.

Rosemount 304 Conventional Manifold Installation Procedure

To install a 304 Conventional Manifold to a 2051 transmitter:

1. Align the Conventional Manifold with the transmitter flange. Use the four manifold bolts for alignment.
2. Finger tighten the bolts, then tighten the bolts incrementally in a cross pattern to final torque value. See “Flange Bolts” on page 2-6 for complete bolt installation information and torque values. When fully tightened, the bolts should extend through the top of the sensor module housing.
3. Leak-check assembly to maximum pressure range of transmitter.

Integral Manifold Operation

Three-valve configuration shown.

In normal operation the two isolate valves between the process and instrument ports will be open and the equalizing valve(s) will be closed.

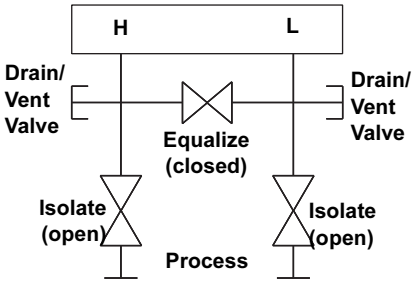

To zero the 2051, close the isolate valve to the low pressure (downstream side) of the transmitter first.

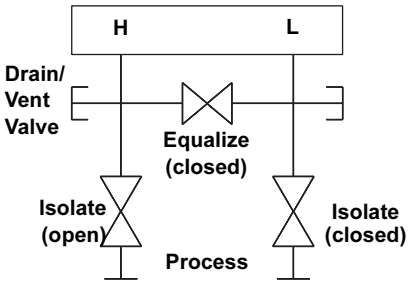

Next, open the center (equalize) valve(s) to equalize the pressure on both sides of the transmitter.

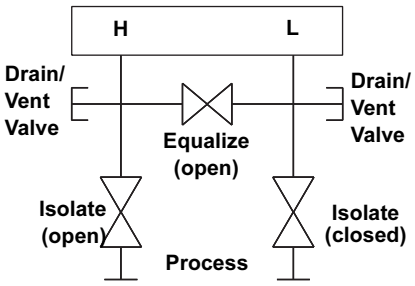

The manifold valves are now in the proper configuration for zeroing the transmitter. To return the transmitter to service, close the equalizing valve(s) first.

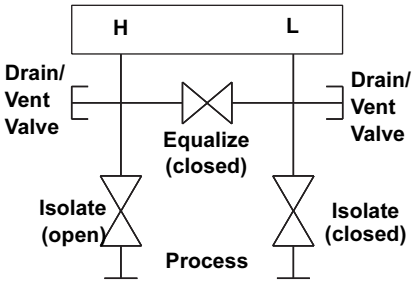

Next, open the isolate valve on the low pressure side of the transmitter.

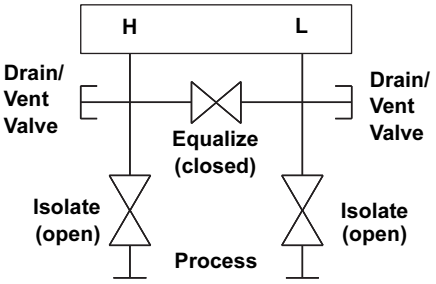

LIQUID LEVEL MEASUREMENT

Differential pressure transmitters used for liquid level applications measure hydrostatic pressure head. Liquid level and specific gravity of a liquid are factors in determining pressure head. This pressure is equal to the liquid height above the tap multiplied by the specific gravity of the liquid. Pressure head is independent of volume or vessel shape.

Open Vessels

A pressure transmitter mounted near a tank bottom measures the pressure of the liquid above.

Make a connection to the high pressure side of the transmitter, and vent the low pressure side to the atmosphere. Pressure head equals the liquid's specific gravity multiplied by the liquid height above the tap.

Zero range suppression is required if the transmitter lies below the zero point of the desired level range. Figure 2-23 shows a liquid level measurement example.

Closed Vessels

Pressure above a liquid affects the pressure measured at the bottom of a closed vessel. The liquid specific gravity multiplied by the liquid height plus the vessel pressure equals the pressure at the bottom of the vessel.

To measure true level, the vessel pressure must be subtracted from the vessel bottom pressure. To do this, make a pressure tap at the top of the vessel and connect this to the low side of the transmitter. Vessel pressure is then equally applied to both the high and low sides of the transmitter. The resulting differential pressure is proportional to liquid height multiplied by the liquid specific gravity.

Dry Leg Condition

Low-side transmitter piping will remain empty if gas above the liquid does not condense. This is a dry leg condition. Range determination calculations are the same as those described for bottom-mounted transmitters in open vessels, as shown in Figure 2-23.

Figure 2-23. Liquid Level Measurement Example.

Let **X** equal the vertical distance between the minimum and maximum measurable levels (500 in.).
Let **Y** equal the vertical distance between the transmitter datum line and the minimum measurable level (100 in.).
Let **SG** equal the specific gravity of the fluid (0.9).
Let **h** equal the maximum head pressure to be measured in inches of water.
Let **e** equal head pressure produced by **Y** expressed in inches of water.
Let **Range** equal **e** to **e** + **h**.

Then h = (**X**)(**SG**)
= 500 x 0.9
= 450 inH_2O
e = (**Y**)(**SG**)
= 100 x 0.9
= 90 inH_2O
Range = 90 to 540 inH_2O

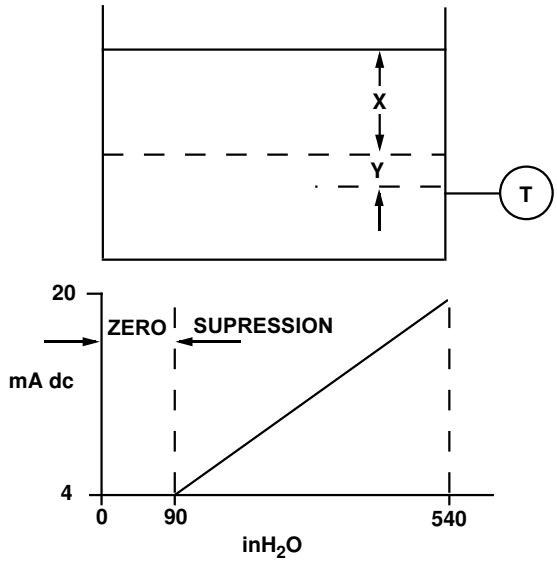

Wet Leg Condition

Condensation of the gas above the liquid slowly causes the low side of the transmitter piping to fill with liquid. The pipe is purposely filled with a convenient reference fluid to eliminate this potential error. This is a wet leg condition.

The reference fluid will exert a head pressure on the low side of the transmitter. Zero elevation of the range must then be made. See Figure 2-24

Figure 2-24. Wet Leg Example.

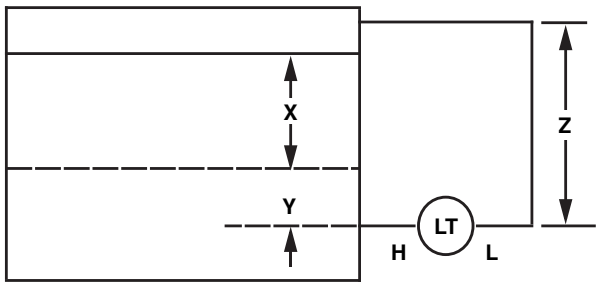

Let **X** equal the vertical distance between the minimum and maximum measurable levels (500 in.).
Let **Y** equal the vertical distance between the transmitter datum line and the minimum measurable level (50 in.).
Let **z** equal the vertical distance between the top of the liquid in the wet leg and the transmitter datum line (600 in.).
Let $\mathbf{SG_1}$ equal the specific gravity of the fluid (1.0).
Let $\mathbf{SG_2}$ equal the specific gravity of the fluid in the wet leg (1.1).
Let **h** equal the maximum head pressure to be measured in inches of water.
Let **e** equal the head pressure produced by **Y** expressed in inches of water.
Let **s** equal head pressure produced by **z** expressed in inches of water.
Let **Range** equal **e** – **s** to **h** + **e** – **s**.

Then $h = \mathbf{(X)(SG_1)}$
$= 500 \times 1.0$
$= 500$ in H_2O
$e = \mathbf{(Y)(SG_1)}$
$= 50 \times 1.0$
$= 50$ inH_2O
$s = \mathbf{(z)(SG_2)}$
$= 600 \times 1.1$
$= 660$ inH_20
Range = **e – s** to **h + e – s**.
$= 50 - 660$ to $500 + 50 - 660$
$= -610$ to -110 inH_20

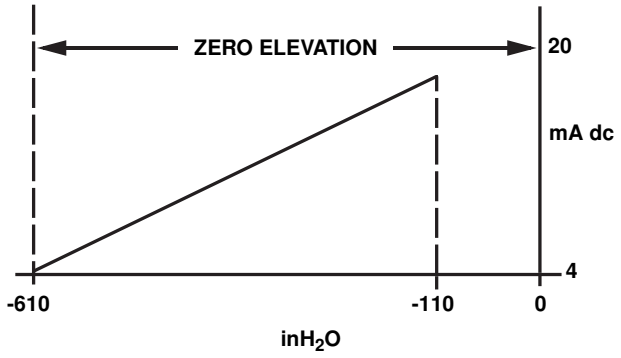

Bubbler System in Open Vessel

A bubbler system that has a top-mounted pressure transmitter can be used in open vessels. This system consists of an air supply, pressure regulator, constant flow meter, pressure transmitter, and a tube that extends down into the vessel.

Bubble air through the tube at a constant flow rate. The pressure required to maintain flow equals the liquid's specific gravity multiplied by the vertical height of the liquid above the tube opening. Figure 2-25 shows a bubbler liquid level measurement example.

Figure 2-25. Bubbler Liquid Level Measurement Example.

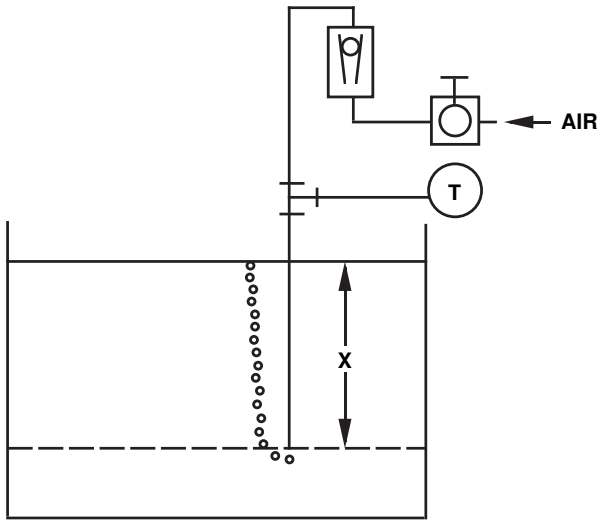

Let **X** equal the vertical distance between the minimum and maximum measurable levels (100 in.).
Let **SG** equal the specific gravity of the fluid (1.1).
Let **h** equal the maximum head pressure to be measured in inches of water.
Let **Range** equal **zero** to **h**.

Then **h** = **(X)(SG)**
= 100 x 1.1
= 110 inH_2O
Range = 0 to 110 inH_2O

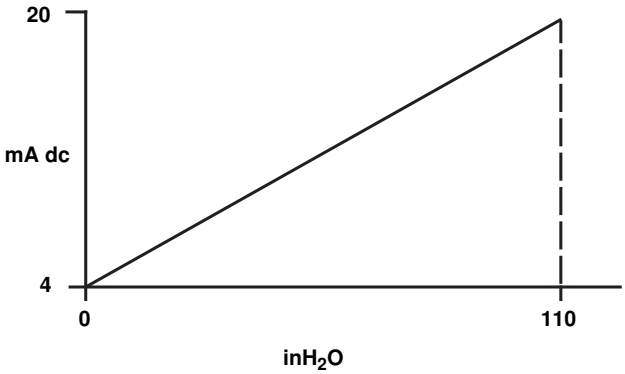

Section 3 Configuration

Overview . . . . . page 3-1
Safety Messages . . . . . page 3-1
Commissioning . . . . . page 3-2
Configuration Data Review . . . . . page 3-4
HART Communicator Menu Trees . . . . . page 3-5
Fast Key Sequence . . . . . page 3-7
Check Output . . . . . page 3-8
Basic Setup . . . . . page 3-9
LCD Display . . . . . page 3-14
Detailed Setup . . . . . page 3-16
Diagnostics and Service . . . . . page 3-18
Advanced Functions . . . . . page 3-20
Multidrop Communication . . . . . page 3-23

OVERVIEW

This section contains information on commissioning and tasks that should be performed on the bench prior to installation.

HART Communicator and AMS Device Manager instructions are given to perform configuration functions. For convenience, HART Communicator fast key sequences are labeled “Fast Keys” for each software function below the appropriate headings.

SAFETY MESSAGES

Procedures and instructions in this section may require special precautions to ensure the safety of the personnel performing the operations. Information that raises potential safety issues is indicated by a warning symbol (⚠). Refer to the following safety messages before performing an operation preceded by this symbol.

Warnings

⚠WARNING

Explosions could result in death or serious injury:
Installation of this transmitter in an explosive environment must be in accordance with the appropriate local, national, and international standards, codes, and practices. Please review the approvals section of the 2051 reference manual for any restrictions associated with a safe installation.

- Before connecting a HART communicator in an explosive atmosphere, ensure the instruments in the loop are installed in accordance with intrinsically safe or non-incendive field wiring practices.
- In an Explosion-Proof/Flameproof installation, do not remove the transmitter covers when power is applied to the unit.

Process leaks may cause harm or result in death.

- Install and tighten process connectors before applying pressure.

Electrical shock can result in death or serious injury.

- Avoid contact with the leads and terminals. High voltage that may be present on leads can cause electrical shock.

COMMISSIONING

Commissioning consists of testing the transmitter and verifying transmitter configuration data. The 2051 transmitters can be commissioned either before or after installation. Commissioning the transmitter on the bench before installation using a HART Communicator or AMS Device Manager ensures that all transmitter components are in working order.

⚠ To commission on the bench, required equipment includes a power supply, a milliamp meter, and a HART Communicator or AMS Device Manager. Wire equipment as shown in Figure 3-1 and Figure 3-2. To ensure successful communication, a resistance of at least 250 ohms must be present between the HART Communicator loop connection and the power supply. Connect the HART Communicator leads to the terminals labeled “COMM” on the terminal block.

Set all transmitter hardware adjustments during commissioning to avoid exposing the transmitter electronics to the plant environment after installation.

When using a HART Communicator, any configuration changes made must be sent to the transmitter by using the “Send” key. AMS Device Manager configuration changes are implemented when the “Apply” button is clicked.

Setting the Loop to Manual

Whenever sending or requesting data that would disrupt the loop or change the output of the transmitter, set the process application loop to manual. The HART Communicator or AMS Device Manager will prompt you to set the loop to manual when necessary. Acknowledging this prompt does not set the loop to manual. The prompt is only a reminder; set the loop to manual as a separate operation.

Wiring Diagrams

Connect the equipment as shown in Figure 3-1 for 4-20 mA HART or Figure 3-2 for 1-5 Vdc HART Low Power. To ensure successful communication, a resistance of at least 250 ohms must be present between the HART Communicator loop connection and the power supply. The HART Communicator or AMS Device Manager may be connected at “COMM” on the transmitter terminal block or across the load resistor. Connecting across the “TEST” terminals will prevent successful communication for 4-20 mA HART output.

Turn on the HART Communicator by pressing the ON/OFF key or log into AMS Device Manager. The HART Communicator or AMS Device Manager will search for a HART-compatible device and indicate when the connection is made. If the HART Communicator or AMS Device Manager fail to connect, it indicates that no device was found. If this occurs, refer to Section 5: Troubleshooting.

Figure 3-1. 4–20 mA HART Transmitter Wiring Diagrams

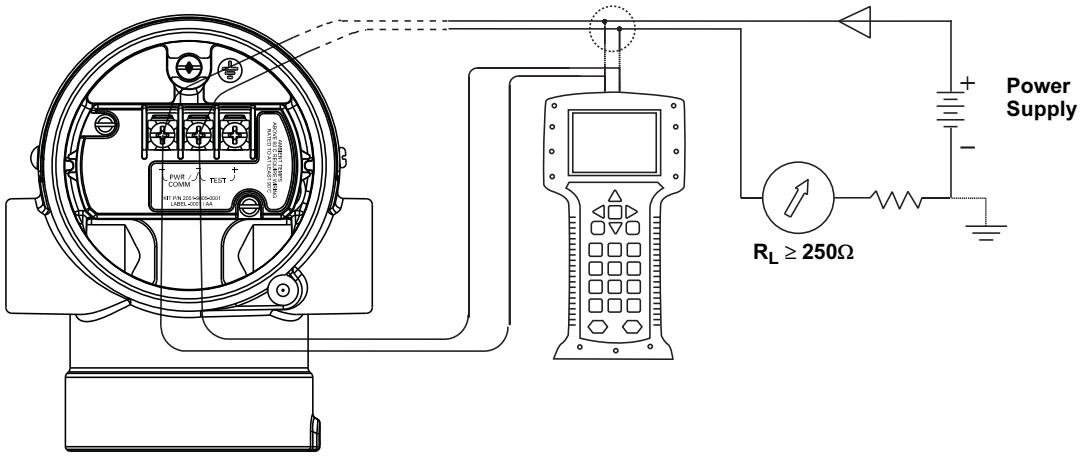

Figure 3-2. 1-5 Vdc HART Low Power Transmitter Wiring

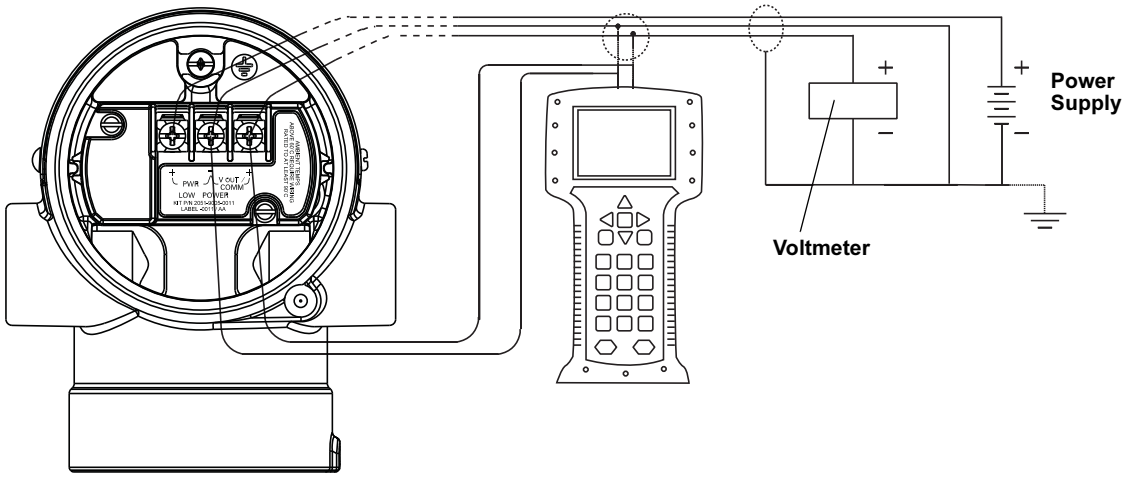

CONFIGURATION DATA REVIEW

NOTE
Information and procedures in this section that make use of HART Communicator fast key sequences and AMS Device Manager assume that the transmitter and communication equipment are connected, powered, and operating correctly.

The following is a list of factory default configurations. These can be reviewed by using the HART Communicator or AMS Device Manager.

HART Communicator

4-20 mA Fast Keys	1, 5
1-5 Vdc Fast Keys	1, 5

Enter the fast key sequence to view the configuration data.

Transmitter Model	Type
Tag	Range
Date	Descriptor
Message	Minimum and Maximum Sensor Limits
Minimum Span	Units
4 and 20 mA points	Output (linear or sq. root)
Damping	Alarm Setting (high, low)
Security Setting (on, off)	Local Zero/Span Keys (enabled, disabled)
Integral Display	Sensor Fill
Isolator Material	Flange (type, material)
O-Ring Material	Drain/Vent
Remote Seal (type, fill fluid, isolator material, number)	Transmitter S/N
Address	Sensor S/N

AMS Device Manager

Right click on the device and select “Configuration Properties” from the menu. Select the tabs to review the transmitter configuration data.

HART COMMUNICATOR MENU TREES

2051 HART menu tree for 4-20 mA HART output

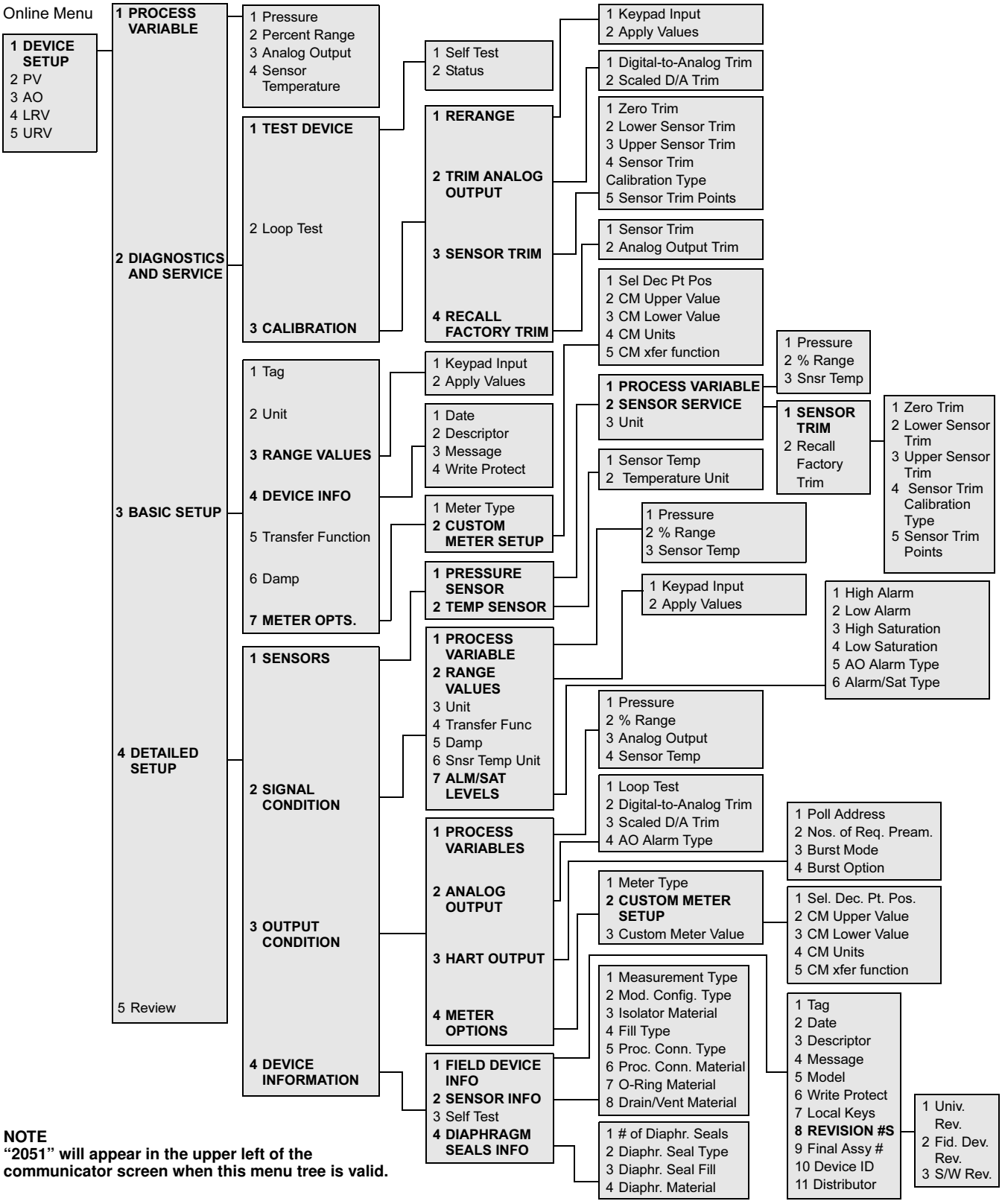

NOTE
"2051" will appear in the upper left of the communicator screen when this menu tree is valid.

2051 HART menu tree for 1-5 Vdc HART Low Power

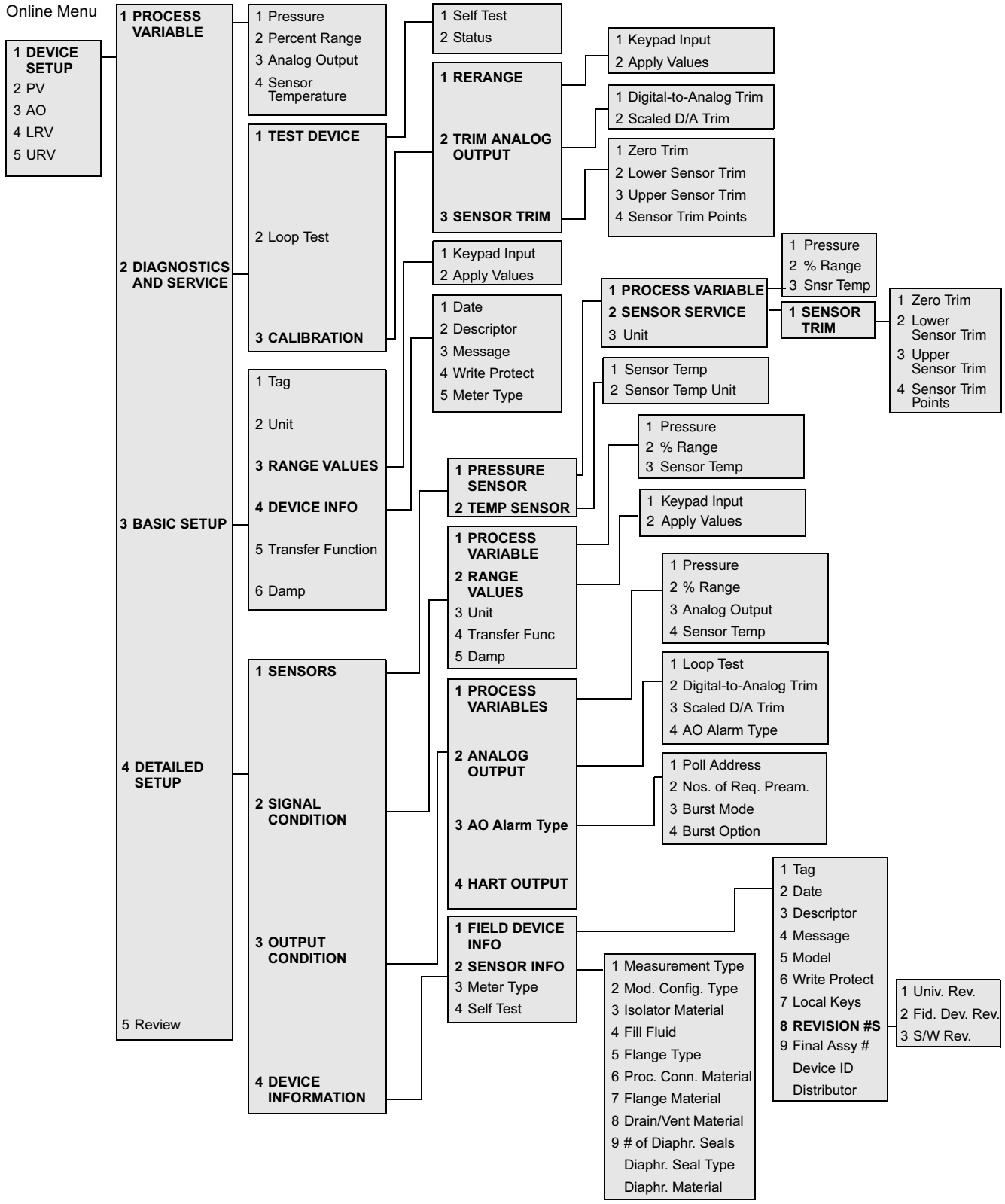

FAST KEY SEQUENCE

A check (√) indicates the basic configuration parameters. At minimum, these parameters should be verified as part of the configuration and startup procedure.

Table 3-1. 2051 Fast Key Sequence

	Function	4-20 mA HART	1-5 Vdc HART Low Power
✓	Alarm and Saturation Levels	1, 4, 2, 7	N/A
	Analog Output Alarm Type	1, 4, 3, 2, 4	1, 4, 3, 2, 4
	Burst Mode Control	1, 4, 3, 3, 3	1, 4, 3, 3, 3
	Burst Operation	1, 4, 3, 3, 4	1, 4, 3, 3, 4
	Custom Meter Configuration	1, 3, 7, 2	N/A
	Custom Meter Value	1, 4, 3, 4, 3	N/A
✓	Damping	1, 3, 6	1, 3, 6
	Date	1, 3, 4, 1	1, 3, 4, 1
	Descriptor	1, 3, 4, 2	1, 3, 4, 2
	Digital To Analog Trim (4-20 mA Output)	1, 2, 3, 2, 1	1, 2, 3, 2, 1
	Disable Local Span/Zero Adjustment	1, 4, 4, 1, 7	1, 4, 4, 1, 7
	Field Device Information	1, 4, 4, 1	1, 4, 4, 1
	Full Trim	1, 2, 3, 3	1, 2, 3, 3
	Keypad Input – Rerange	1, 2, 3, 1, 1	1, 2, 3, 1, 1
	Local Zero and Span Control	1, 4, 4, 1, 7	1, 4, 4, 1, 7
	Loop Test	1, 2, 2	1, 2, 2
	Lower Sensor Trim	1, 2, 3, 3, 2	1, 2, 3, 3, 2
	Message	1, 3, 4, 3	1, 3, 4, 3
	Meter Options	1, 4, 3, 4	N/A
	Number of Requested Preambles	1, 4, 3, 3, 2	1, 4, 3, 3, 2
	Poll Address	1, 4, 3, 3, 1	1, 4, 3, 3, 1
	Poll a Multidropped Transmitter	Left Arrow, 4, 1, 1	Left Arrow, 4, 1, 1
✓	Range Values	1, 3, 3	1, 3, 3
	Rerange	1, 2, 3, 1	1, 2, 3, 1
	Scaled D/A Trim (4–20 mA Output)	1, 2, 3, 2, 2	1, 2, 3, 2, 2
	Self Test (Transmitter)	1, 2, 1, 1	1, 2, 1, 1
	Sensor Info	1, 4, 4, 2	1, 4, 4, 2
	Sensor Temperature	1, 1, 4	1, 1, 4
	Sensor Trim Points	1, 2, 3, 3, 4	1, 2, 3, 3, 4
	Status	1, 2, 1, 2	1, 2, 1, 2
✓	Tag	1, 3, 1	1, 3, 1
✓	Transfer Function (Setting Output Type)	1, 3, 5	1, 3, 5
	Transmitter Security (Write Protect)	1, 3, 4, 4	1, 3, 4, 4
	Trim Analog Output	1, 2, 3, 2	1, 2, 3, 2
✓	Units (Process Variable)	1, 3, 2	1, 3, 2
	Upper Sensor Trim	1, 2, 3, 3, 3	1, 2, 3, 3, 3
	Zero Trim	1, 2, 3, 3, 1	1, 2, 3, 3, 1

CHECK OUTPUT

Before performing other transmitter on-line operations, review the digital output parameters to ensure that the transmitter is operating properly and is configured to the appropriate process variables.

Process Variables

The process variables for the 2051 provide transmitter output, and are continuously updated. The pressure reading in both engineering units and percent of range will continue to track with pressures outside of the defined range from the lower to the upper range limit of the sensor module.

HART Communicator

4-20 mA Fast Keys	1, 1
1-5 Vdc Fast Keys	1, 1

The process variable menu displays the following process variables:

- Pressure
- Percent of range
- Analog output

AMS Device Manager

Right click on the device and select “Process Variables...” from the menu.The process variable screen displays the following process variables:

- Pressure
- Percent of range
- Analog output

Sensor Temperature

The 2051 contains a temperature sensor near the pressure sensor in the sensor module. When reading this temperature, keep in mind the sensor is not a process temperature reading.

HART Communicator

4-20 mA Fast Keys	1, 1, 4
1-5 Vdc Fast Keys	1, 1, 4

Enter the fast key sequence “Sensor Temperature” to view the sensor temperature reading.

AMS Device Manager

Right click on the device and select “Process Variables...” from the menu. “Snsr Temp” is the sensor temperature reading.

BASIC SETUP

Set Process Variable Units

The PV Unit command sets the process variable units to allow you to monitor your process using the appropriate units of measure.

HART Communicator

4-20 mA Fast Keys	1, 3, 2
1-5 Vdc Fast Keys	1, 3, 2

Enter the fast key sequence “Set Process Variable Units.” Select from the following engineering units:

- inH_2O
- inHg
- ftH_2O
- mmH_2O
- mmHg
- psi
- bar
- mbar
- g/cm^2
- kg/cm^2
- Pa
- kPa
- torr
- atm
- inH_2O at 4 °C
- mmH_2O at 4 °C

AMS Device Manager

Right click on the device and select “Configure” from the menu. In the Basic Setup tab, use “Unit” drop down menu to select units.

Set Output (Transfer function)

The 2051 has two output settings: Linear and Square Root. Activate the square root output option to make analog output proportional to flow. As input approaches zero, the 2051 automatically switches to linear output in order to ensure a more smooth, stable output near zero (see Figure 3-3).

For 4-20 mA HART output, the slope of the curve is unity (y = x) from 0 to 0.6 percent of the ranged pressure input. This allows accurate calibration near zero. Greater slopes would cause large changes in output (for small changes at input). From 0.6 percent to 0.8 percent, curve slope equals 42 (y = 42x) to achieve continuous transition from linear to square root at the transition point.

HART Communicator

4-20 mA Fast Keys	1, 3, 5
1-5 Vdc Fast Keys	1, 3, 5

AMS Device Manager

Right click on the device and select “Configure” from the menu.

1. In the Basic Setup tab, use “Xfer fnctn” drop down menu to select output, click **Apply**.
2. After carefully reading the warning provided, select **yes**.

Figure 3-3. 4-20 mA HART Square Root Output Transition Point

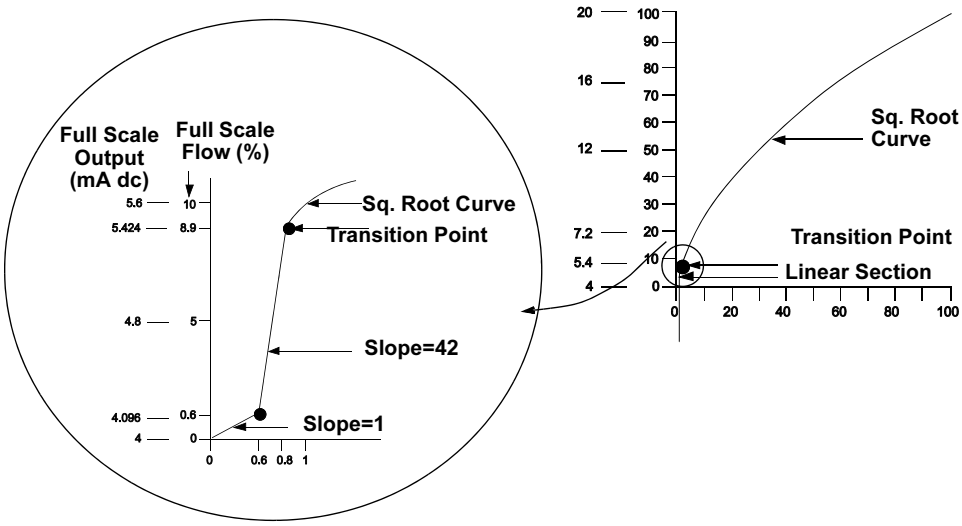

NOTE
For a flow turndown of greater than 10:1 it is not recommended to perform a square root extraction in the transmitter. Instead, perform the square root extraction in the system.

Rerange

The Range Values command sets each of the lower and upper range analog values (4 and 20 mA points and 1 and 5 Vdc points) to a pressure. The lower range point represents 0% of range and the upper range point represents 100% of range. In practice, the transmitter range values may be changed as often as necessary to reflect changing process requirements. For a complete listing of Range & Sensor limits, refer to “Range and Sensor Limits” on page A-4.

NOTE
Transmitters are shipped from Emerson Process Management fully calibrated per request or by the factory default of full scale (zero to upper range limit).

NOTE
Regardless of the range points, the 2051 will measure and report all readings within the digital limits of the sensor. For example, if the 4 and 20 mA points are set to 0 and 10 inH_2O, and the transmitter detects a pressure of 25 inH_2O, it digitally outputs the 25 inH_2O reading and a 250% of range reading.

Select from one of the methods below to rerange the transmitter. Each method is unique; examine all options closely before deciding which method works best for your process.

- Rerange with a HART Communicator or AMS Device Manager only.
- Rerange with a pressure input source and a HART Communicator or AMS Device Manager.
- Rerange with a pressure input source and the local zero and span buttons (option D4).

NOTE
If the transmitter security switch is **ON,** adjustments to the zero and span will not be able to be made. Refer to “Configure Security and Alarm” on page 2-22 for security information.

Rerange with a HART Communicator or AMS Device Manager Only

The easiest and most popular way to rerange is to use the HART Communicator only. This method changes the range values of the analog 4 and 20 mA points (1 and 5 Vdc points) independently without a pressure input. This means that when you change either the 4 or 20 mA setting, you also change the span.

An example for the 4-20 mA HART output:

If the transmitter is ranged so that

4 mA = 0 inH_2O, and
20 mA = 100 inH_2O,

and you change the 4 mA setting to 50 inH_2O using the communicator only, the new settings are:
4 mA = 50 inH_2O, and
20 mA = 100 inH_2O.

Note that the span was also changed from 100 inH_2O to 50 inH_2O, while the 20 mA setpoint remained at 100 inH_2O.

To obtain reverse output, simply set the 4 mA point at a greater numerical value than the 20 mA point. Using the above example, setting the 4 mA point at 100 inH_2O and the 20 mA point at 0 inH_2O will result in reverse output.

HART Communicator

4-20 mA Fast Keys	1, 2, 3, 1
1-5 Vdc Fast Keys	1, 2, 3, 1

From the **HOME** screen, enter the fast key sequence “Rerange with a Communicator Only.”

AMS Device Manager

Right click on the device and select “Configure” from the menu. In the Basic Setup tab, locate the Analog Output box and perform the following procedure:

1. Enter the lower range value (LRV) and the upper range value (URV) in the fields provided. Click **Apply**.
2. After carefully reading the warning provided, select **yes**.

Rerange with a Pressure Input Source and a HART Communicator or AMS Device Manager

Reranging using the HART Communicator and applied pressure is a way of reranging the transmitter when specific 4 and 20 mA points (1 and 5 Vdc points) are not calculated.

NOTE
The span is maintained when the 4 mA point (1 Vdc point) is set. The span changes when the 20 mA point (5 Vdc point) is set. If the lower range point is set to a value that causes the upper range point to exceed the sensor limit, the upper range point is automatically set to the sensor limit, and the span is adjusted accordingly.

HART Communicator

4-20 mA Fast Keys	1, 2, 3, 1, 2
1-5 Vdc Fast Keys	1, 2, 3, 1, 2

From the **HOME** screen, enter the fast key sequence "Rerange with a Pressure Input Source and a HART Communicator or AMS Device Manager".

AMS Device Manager

Right click on the device, select “Calibrate”, then “Apply values” from the menu.

1. Select **Next** after the control loop is set to manual.
2. From the “Apply Values” menu, follow the on-line instructions to configure lower and upper range values.
3. Select **Exit** to leave the “Apply Values” screen.
4. Select **Next** to acknowledge the loop can be returned to automatic control.
5. Select **Finish** to acknowledge the method is complete.

Rerange with a Pressure Input Source and the Local Zero and Span buttons (option D4)

Reranging using the local zero and span adjustments (see Figure 3-4 on page 3-13) and a pressure source is a way of reranging the transmitter when specific 4 and 20 mA (1 and 5 Vdc) points are not known and a communicator is not available.

NOTE
When you set the 4 mA (1 Vdc) point the span is maintained; when you set the 20 mA (5 Vdc) point the span changes. If you set the lower range point to a value that causes the upper range point to exceed the sensor limit, the upper range point is automatically set to the sensor limit, and the span is adjusted accordingly.

To rerange the transmitter using the span and zero buttons, perform the following procedure:

1. Loosen the screw holding the certifications label on the side of the transmitter housing. Slide the label to expose the zero and span buttons. See Figure 3-4.
2. Apply the desired 4 mA (1 Vdc) pressure value to the transmitter. Push and hold the zero adjustment button for at least two seconds but no longer than ten seconds.
3. Apply the desired 20 mA (5 Vdc) pressure value to the transmitter. Push and hold the span adjustment button for at least two seconds but no longer than ten seconds.

Figure 3-4. Zero and Span buttons

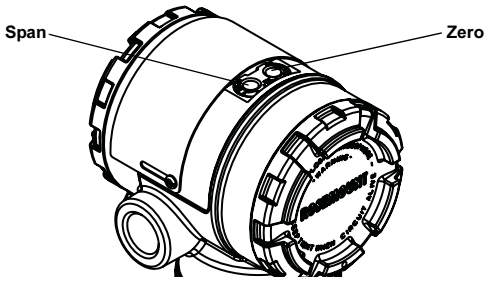

NOTE
The span is maintained when the 4 mA point (1 Vdc point) is set. The span changes when the 20 mA point (5 Vdc point) is set. If the lower range point is set to a value that causes the upper range point to exceed the sensor limit, the upper range point is automatically set to the sensor limit, and the span is adjusted accordingly.

Damping

The “Damp” command introduces a delay in the micro-processing which increases the response time of the transmitter; smoothing variations in output readings caused by rapid input changes. Determine the appropriate damping setting based on the necessary response time, signal stability, and other requirements of the loop dynamics within your system. The default damping value is 0.4 seconds and it can be set to any of ten pre-configured damping values between 0 and 25.6 seconds. See list below.

- 0.00 seconds
- 0.05 seconds
- 0.10 seconds
- 0.20 seconds
- 0.40 seconds
- 0.80 seconds
- 1.60 seconds
- 3.20 seconds
- 6.40 seconds
- 12.8 seconds
- 25.6 seconds

The current damping value can be determined by executing the HART Communicator fast keys or going to "Configure" in AMS Device Manager.

HART Communicator

4-20 mA Fast Keys	1, 3, 6
1-5 Vdc Fast Keys	1, 3, 6

AMS Device Manager

Right click on the device and select “Configure” from the menu.

1. In the “Basic Setup” tab, enter the damping value in the “Damp” field, click **Apply**.
2. After carefully reading the warning provided, select **yes**.

LCD DISPLAY

The LCD display connects directly to the interface board which maintains direct access to the signal terminals. The display indicates output and abbreviated diagnostic messages. A display cover is provided to accommodate the display.

For 4-20 mA HART output, the LCD display features a two-line display. The first line of five characters displays the actual measured value, the second line of six characters displays the engineering units. The LCD can also display diagnostic messages. Refer to Figure 3-5.

For 1-5 Vdc HART Low Power output, the LCD display features a single-line display with four characters that display the actual value. The LCD can also display diagnostic messages. Refer to Figure 3-5.

Figure 3-5.

4-20 mA HART | **1-5 Vdc HART Low Power**

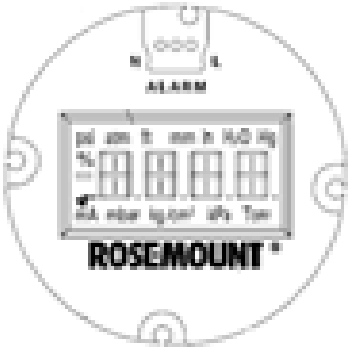

LCD Display Configuration for 4-20 mA HART only

The factory default alternates are between Engineering Units and % of Range. The LCD Display Configuration command allows customization of the LCD display to suit application requirements. The LCD display will alternate between the selected items:

- Eng. Units only
- % of Range only
- Custom Display only
- Alternate Eng. Units & % of Range
- Alternate Eng. Units & Custom Display
- Alternate % of Range & Custom Display

HART Communicator

4-20 mA Fast Keys	1, 3, 7

To change the standard default to one of the above options, follow these steps:

1. From the communicators main menu select (1) Device Setup (3) Basic Setup, (7) Meter Options.
2. Select (1) Meter Type. Using the up or down arrows scroll up or down until the desired display has been highlighted. Press ENTER, SEND, and HOME.

AMS

Right click on the device and select “Configuration Properties” from the menu.

1. In the “Local Display” tab, locate the “Meter Type” area. Select the desired options to suit your application needs, click **Apply**.
2. An “Apply Parameter Modification” screen appears, enter desired information and click **OK**.
3. After carefully reading the warning provided, select **OK**.

Custom Display Configuration 4-20 mA HART only

The user-configurable scale is a feature that enables the LCD display to display flow, level, or custom pressure units. With this feature you can define the decimal point position, the upper range value, the lower range value, the engineering units, and the transfer function.The display can be configured using a HART Communicator or AMS.

The user-configurable scale feature can define:

- decimal point position
- upper range values
- lower range values
- engineering units
- transfer function

To configure the display with a HART communicator, perform the following procedure:

1. Change the Meter Type to “Custom Meter” by using the Fast Key sequence under “LCD Display Configuration for 4-20 mA HART only” on page 3-15.
2. Next from the **ONLINE** screen, *Select 1 Device Setup, 3 Basic Setup, 7 Meter Options, 2 Meter Options, 2 Custom Meter Setup*
3. To specify decimal point position:

⚠ See “Safety Messages” on page 3-1 for complete warning information.

a. Select *1 Sel dec pt pos*. Choose the decimal point representation that will provide the most accurate output for your application. For example, when outputting between 0 and 75 GPM, choose *XX.XXX* or use the decimal point examples below:

XXXXX
XXXX.X
XXX.XX
XX.XXX
X.XXXX

NOTE:
Make sure the selection has been sent and the decimal point has changed before proceeding to the next step.

b. SEND

4. To specify a custom upper range value:
   a. Select *2 CM Upper Value*. Type the value that you want the transmitter to read at the 20 mA point.
   b. SEND
5. To specify a custom lower range value:
   a. Select *3 CM Lower Value*. Type the value that you want the transmitter to read at the 4 mA point.
   b. SEND
6. To define custom units:
   a. Select *4 CM Units*. Enter the custom units (five characters maximum) that you want the display to display.
   b. SEND
7. To choose the transmitter transfer function for the display:
   a. Select *5 CM xfer fnct*. Enter the transmitter transfer function for the display. Select *sq root* to display flow units. The custom meter transfer function is independent of the analog output transfer function.
8. Select **SEND** to upload the configuration to the transmitter.

DETAILED SETUP

Failure Mode Alarm and Saturation

The 2051 transmitters automatically and continuously perform self-diagnostic routines. If the self-diagnostic routines detect a failure, the transmitter drives its output outside of the normal saturation values. The transmitter will drive its output low or high based on the position of the failure mode alarm jumper. See Table 3-2, Table 3-3, and Table 3-4 for failure mode and saturation output levels. To select alarm position, see “Configure Security and Alarm” on page 2-22.

Table 3-2. 4-20 mA HART Alarm and Saturation Values

Level	4–20 mA Saturation	4–20 mA Alarm
Low	3.9 mA	≤ 3.75 mA
High	20.8 mA	≥ 21.75 mA

Table 3-3. NAMUR-Compliant Alarm and Saturation Values

Level	4–20 mA Saturation	4–20 mA Alarm
Low	3.8 mA	≤ 3.6 mA
High	20.5 mA	≥ 22.5 mA

Table 3-4. 1-5 Vdc HART Low-Power Alarm and Saturation Values

Level	1–5 V Saturation	1–5 V Alarm
Low	0.97 V	≤ 0.95 V
High	5.20 V	≥ 5.4 V

CAUTION
Alarm level values will be affected by analog trim. Refer to “Analog Output Trim” on page 4-7.

NOTE
When a transmitter is in an alarm condition, the HART communicator indicates the analog output the transmitter would drive if the alarm condition did not exist. The transmitter will alarm high in the event of failure if the alarm jumper is removed.

Alarm and Saturation Levels for Burst Mode

Transmitters set to burst mode handle saturation and alarm conditions differently.

Alarm Conditions:

- Analog output switches to alarm value
- Primary variable is burst with a status bit set
- Percent of range follows primary variable
- Temperature is burst with a status bit set

Saturation:

- Analog output switches to saturation value
- Primary variable is burst normally
- Temperature is burst normally

Alarm and Saturation Values for Multidrop Mode

Transmitters set to multidrop mode handle saturation and alarm conditions differently.

Alarm Conditions:

- Primary variable is sent with a status bit set
- Percent of range follows primary variable
- Temperature is sent with a status bit set

Saturation:

- Primary variable is sent normally
- Temperature is sent normally

Alarm Level Verification

If the transmitter electronics board, sensor module, or LCD display is repaired or replaced, verify the transmitter alarm level before returning the transmitter to service. This feature is also useful in testing the reaction of the control system to a transmitter in an alarm state. To verify the transmitter alarm values, perform a loop test and set the transmitter output to the alarm value (see Tables 3-2, 3-3, and 3-4 on page 3-16, and “Loop Test” on page 3-18).

DIAGNOSTICS AND SERVICE

Diagnostics and service functions listed below are primarily for use after field installation. The Transmitter Test feature is designed to verify that the transmitter is operating properly, and the Loop Test feature is designed to verify proper loop wiring and transmitter output.

Transmitter Test

The Transmitter Test command initiates a more extensive diagnostics routine than that performed continuously by the transmitter. The test routine can quickly identify potential electronics problems. If the test detects a problem, messages to indicate the source of the problem are displayed on the HART Communicator screen.

HART Communicator

4-20 mA Fast Keys	1, 2, 1, 1
1-5 Vdc Fast Keys	1, 2, 1, 1

AMS Device Manager

Right click on the device and select “Diagnostics and Test,” then “Self Test” from the menu.

1. Click **Next** to acknowledge test results.
2. Select **Finish** to acknowledge the method is complete.

Loop Test

The Loop Test command verifies the output of the transmitter, the integrity of the loop, and the operations of any recorders or similar devices installed in the loop.

HART Communicator

4-20 mA Fast Keys	1, 2, 2
1-5 Vdc Fast Keys	1, 2, 2

To initiate a loop test, perform the following procedure:

1. a. For 4-20 mA HART output, connect a reference meter to the transmitter by either connecting the meter to the test terminals on the terminal block, or shunting transmitter power through the meter at some point in the loop.
   b. For 1-5 Vdc Low Power HART output, connect a reference meter to the V_{out} terminal.
2. From the **HOME** screen, enter the fast key sequence “Loop Test” to verify the output of the transmitter.
3. Select **OK** after the control loop is set to manual (see “Setting the Loop to Manual” on page 3-2).
4. Select a discrete milliamp level for the transmitter to output. At the **CHOOSE ANALOG OUTPUT** prompt select 1: 4mA (1 Vdc), select 2: 20mA (5 Vdc), or select 3: “Other” to manually input a value.
   a. If you are performing a loop test to verify the output of a transmitter, enter a value between 4 and 20 mA (1 and 5 Vdc).
   b. If you are performing a loop test to verify alarm levels, enter the value representing an alarm state (see Tables 3-2, 3-3, and 3-4 on page 3-16).
5. Check that the reference meter displays the commanded output value.
   a. If the values match, the transmitter and the loop are configured and functioning properly.
   b. If the values do not match, the meter may be attached to the wrong loop, there may be a fault in the wiring or power supply, the transmitter may require an output trim, or the reference meter may be malfunctioning.

After completing the test procedure, the display returns to the loop test screen to choose another output value or to end loop testing.

AMS Device Manager

Right click on the device and select “Diagnostics and Test,” then “Loop test” from the menu.

1. a. For 4-20 mA HART output, connect a reference meter to the transmitter by either connecting the meter to the test terminals on the terminal block, or shunting transmitter power through the meter at some point in the loop.
   b. For 1-5 Vdc Low Power HART output, connect a reference meter to the V_{out} terminal.
2. Click **Next** after setting the control loop to manual.
3. Select desired analog output level. Click **Next**.
4. Click **Next** to acknowledge output being set to desired level.
5. Check that the reference meter displays the commanded output value.
   a. If the values match, the transmitter and the loop are configured and functioning properly.
   b. If the values do not match, the meter may be attached to the wrong loop, there may be a fault in the wiring or power supply, the transmitter may require an output trim, or the reference meter may be malfunctioning.

After completing the test procedure, the display returns to the loop test screen to choose another output value or to end loop testing.

6. Select **End** and click **Next** to end loop testing.
7. Select **Next** to acknowledge the loop can be returned to automatic control.
8. Select **Finish** to acknowledge the method is complete.

ADVANCED FUNCTIONS

Saving, Recalling, and Cloning Configuration Data

Use the cloning feature of the HART Communicator or the AMS Device Manager "User Configuration" feature to configure several 2051 transmitters similarly. Cloning involves configuring a transmitter, saving the configuration data, then sending a copy of the data to a separate transmitter. Several possible procedures exist when saving, recalling, and cloning configuration data. For complete instructions refer to the HART Communicator manual (publication no. 00809-0100-4276) or AMS Device Manager on-line guides. One common method is as follows:

HART Communicator

4-20 mA Fast Keys	left arrow, 1, 2
1-5 Vdc Fast Keys	left arrow, 1, 2

1. Completely configure the first transmitter.
2. Save the configuration data:
   a. Select **SAVE** from the HART Communicator **HOME/ONLINE** screen.
   b. Ensure that the location to which the data will be saved is set to **MODULE**. If it is not, select 1: Location to set the save location to **MODULE**.
   c. Select 2: Name, to name the configuration data. The default is the transmitter tag number.
   d. Ensure that the data type is set to **STANDARD**. If the data type is NOT **STANDARD**, select 3: Data Type to set the data type to **STANDARD**.
   e. Select **SAVE**.
3. Connect and power the receiving transmitter and HART Communicator.
4. Select the back arrow from the **HOME/ONLINE** screen. The HART Communicator menu appears.
5. Select 1: Offline, 2: Saved Configuration, 1: Module Contents to reach the **MODULE CONTENTS** menu.
6. Use the **DOWN ARROW** to scroll through the list of configurations in the memory module, and use the **RIGHT ARROW** to select and retrieve the required configuration.
7. Select 1: Edit.
8. Select 1: Mark All.
9. Select **SAVE**.
10. Use the **DOWN ARROW** to scroll through the list of configurations in the memory module, and use the **RIGHT ARROW** to select the configuration again.

11. Select 3: Send to download the configuration to the transmitter.
12. Select **OK** after the control loop is set to manual.
13. After the configuration has been sent, select **OK** to acknowledge that the loop can be returned to automatic control.

When finished, the HART Communicator informs you of the status. Repeat Steps 3 through 13 to configure another transmitter.

NOTE
The transmitter receiving cloned data must have the same software version (or later) as the original transmitter.

AMS Device Manager creating a Reusable Copy

To create a reusable copy of a configuration perform the following procedure:

1. Completely configure the first transmitter.
2. Select View then User Configuration View from the menu bar (or click the toolbar button).
3. In the User Configuration window, right click and select New from the context menu.
4. In the New window, select a device from the list of templates shown, and click **OK**.
5. The template is copied into the User Configurations window, with the tag name highlighted; rename it as appropriate and press **Enter**.

NOTE
A device icon can also be copied by dragging and dropping a device template or any other device icon from AMS Device Manager Explorer or Device Connection View into the User Configurations window.

The “Compare Configurations” window appears, showing the Current values of the copied device on one side and mostly blank fields on the other (User Configuration) side.

6. Transfer values from the current configuration to the user configuration as appropriate or enter values by typing the values into the available fields.
7. Click Apply to apply the values, or click **OK** to apply the values and close the window.

AMS Device Manager Applying a User Configuration

Any amount of user configurations can be created for the application. They can also be saved, and applied to connected devices or to devices in the Device List or Plant Database.

NOTE
When using AMS Device Manager Revision 6.0 or later, the device to which the user configuration is applied, must be the same model type as the one created in the user configuration. When using AMS Device Manager Revision 5.0 or earlier, the same model type and revision number are required.

To apply a user configuration perform the following procedure:

1. Select the desired user configuration in the User Configurations window.
2. Drag the icon onto a like device in AMS Device Manager Explorer or Device Connection View. The Compare Configurations window opens, showing the parameters of the target device on one side and the parameters of the user configuration on the other.
3. Transfer parameters from the user configuration to the target device as desired, Click **OK** to apply the configuration and close the window.

Burst Mode

When configured for burst mode, the 2051 provides faster digital communication from the transmitter to the control system by eliminating the time required for the control system to request information from the transmitter. Burst mode is compatible with the analog signal. Because the HART protocol features simultaneous digital and analog data transmission, the analog value can drive other equipment in the loop while the control system is receiving the digital information. Burst mode applies only to the transmission of dynamic data (pressure and temperature in engineering units, pressure in percent of range, and/or analog output), and does not affect the way other transmitter data is accessed.

Access to information other than dynamic transmitter data is obtained through the normal poll/response method of HART communication. A HART Communicator, AMS Device Manager or the control system may request any of the information that is normally available while the transmitter is in burst mode. Between each message sent by the transmitter, a short pause allows the HART Communicator, AMS Device Manager or a control system to initiate a request. The transmitter will receive the request, process the response message, and then continue “bursting” the data approximately three times per second.

HART Communicator

4-20 mA Fast Keys	1, 4, 3, 3, 3
1-5 Vdc Fast Keys	1, 4, 3, 3, 3

AMS Device Manager

Right click on the device and select “Configure” from the menu.

1. In the “HART” tab, use the drop down menu to select “Burst Mode ON or OFF.” For “Burst option” select the desired properties from the drop down menu. Burst options are as follows:
   - PV
   - % range/current
   - Process vars/crnt
   - Process variables
2. After selecting options click **Apply**.
3. After carefully reading the warning provided, select **yes**.

MULTIDROP COMMUNICATION

Multidropping transmitters refers to the connection of several transmitters to a single communications transmission line. Communication between the host and the transmitters takes place digitally with the analog output of the transmitters deactivated. With smart communications protocol, up to fifteen transmitters can be connected on a single twisted pair of wires, or over leased phone lines.

Multidrop installation requires consideration of the update rate necessary from each transmitter, the combination of transmitter models, and the length of the transmission line. Communication with transmitters can be accomplished with HART modems and a host implementing HART protocol. Each transmitter is identified by a unique address (1–15) and responds to the commands defined in the HART protocol. HART Communicators and AMS Device Manager can test, configure, and format a multidropped transmitter the same way as a transmitter in a standard point-to-point installation.

Figure 3-6 shows a typical multidrop network. This figure is not intended as an installation diagram.

NOTE
A transmitter in multidrop mode has the analog output fixed at 4 mA. If an LCD display is installed to a transmitter in multidrop mode, it will alternate the display between “current fixed” and the specified LCD display output(s).

Figure 3-6. Typical Multidrop Network

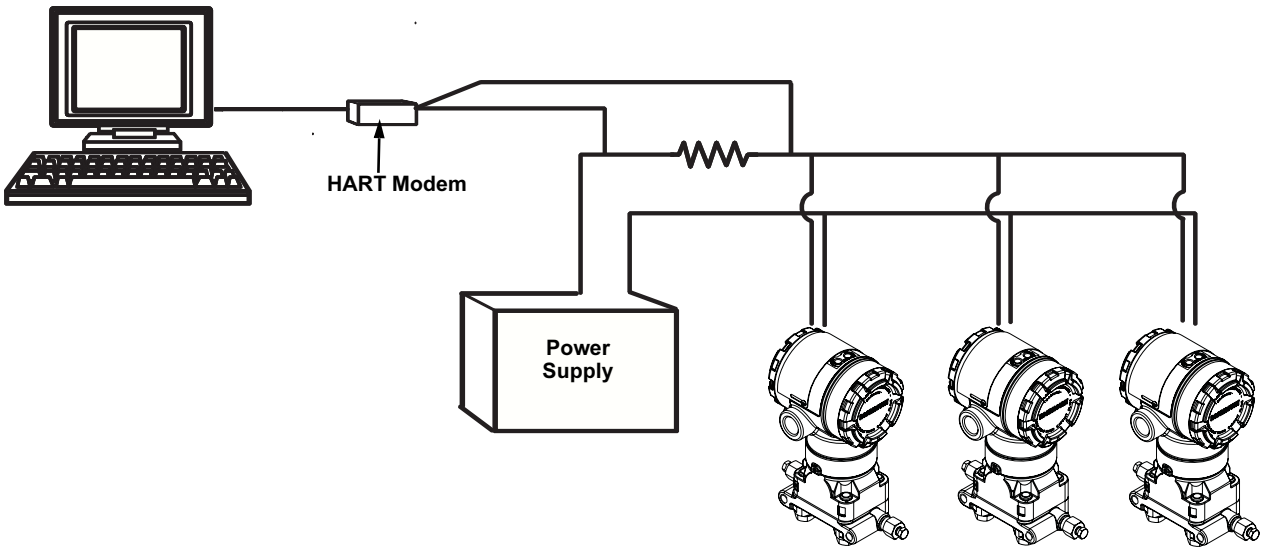

The 2051 is set to address zero (0) at the factory, which allows operation in the standard point-to-point manner with a 4–20 mA output signal. To activate multidrop communication, the transmitter address must be changed to a number from 1 to 15. This change deactivates the 4–20 mA analog output, sending it to 4 mA. It also disables the failure mode alarm signal, which is controlled by the upscale/downscale switch position. Failure signals in multidropped transmitters are communicated through HART messages.

Changing a Transmitter Address

To activate multidrop communication, the transmitter poll address must be assigned a number from 1 to 15, and each transmitter in a multidropped loop must have a unique poll address.

HART Communicator

4-20 mA Fast Keys	1, 4, 3, 3, 1
1-5 Vdc Fast Keys	1, 4, 3, 3, 1

AMS Device Manager

Right click on the device and select “Configuration Properties” from the menu.

1. In the “HART” tab, in “ID” box, enter poll address located in the “Poll addr” box, click **Apply**.
2. After carefully reading the warning provided, select **yes**.

Communicating with a Multidropped Transmitter

HART Communicator

4-20 mA Fast Keys	1, 4, 3, 3, 2
1-5 Vdc Fast Keys	1, 4, 3, 3, 2

To communicate with a multidropped transmitter, configure the HART Communicator to poll for a non-zero address.

1. From the **HOME** screen, enter the fast key sequence “Communicating with a Multidropped Transmitter.”
2. On the polling menu, scroll down and select “Digital Poll.” In this mode, the HART Communicator automatically polls for devices at addresses 0-15 upon start up.

AMS Device Manager

Click on the HART modem icon and select “Scan All Devices.”

Polling a Multidropped Transmitter

Polling a multidropped loop determines the model, address, and number of transmitters on the given loop.

HART Communicator

4-20 mA Fast Keys	Left arrow, 4, 1
1-5 Vdc Fast Keys	Left arrow, 4, 1

AMS Device Manager

Click on the HART modem icon and select “Scan All Devices.”

Section 4 Operation and Maintenance

Overview . . . . . **page 4-1**
Safety Messages . . . . . **page 4-1**
Calibration Overview . . . . . **page 4-2**
Analog Output Trim . . . . . **page 4-7**
Sensor Trim . . . . . **page 4-10**

OVERVIEW

This section contains information on calibrating and diagnostics messages on the Rosemount 2051 Pressure Transmitters.

HART Communicator and AMS instructions are given to perform configuration functions. For convenience, HART Communicator fast key sequences are labeled “Fast Keys” for each software function below the appropriate headings.

SAFETY MESSAGES

Procedures and instructions in this section may require special precautions to ensure the safety of the personnel performing the operations. Information that raises potential safety issues is indicated by a warning symbol (⚠). Refer to the following safety messages before performing an operation preceded by this symbol.

Warnings

⚠WARNING

Explosions could result in death or serious injury:
Installation of this transmitter in an explosive environment must be in accordance with the appropriate local, national, and international standards, codes, and practices. Please review the approvals section of the 2051 reference manual for any restrictions associated with a safe installation.

- Before connecting a HART communicator in an explosive atmosphere, ensure the instruments in the loop are installed in accordance with intrinsically safe or non-incendive field wiring practices.
- In an Explosion-Proof/Flameproof installation, do not remove the transmitter covers when power is applied to the unit.

Process leaks may cause harm or result in death.

- Install and tighten process connectors before applying pressure.

Electrical shock can result in death or serious injury.

- Avoid contact with the leads and terminals. High voltage that may be present on leads can cause electrical shock.

CALIBRATION OVERVIEW

Calibration is defined as the process required to optimize transmitter accuracy over a specific range by adjusting the factory sensor characterization curve located in the microprocessor. Possible procedures are:

- Reranging: Setting the lower and upper range points (4 and 20 mA or 1 and 5 Vdc) points at required pressures. Reranging does not change the factory sensor characterization curve. Refer to page 3-10.
- Analog Output Trim: Adjusts the transmitter's analog characterization curve to match the plant standard of the control loop. There are two types of digital-to-analog output trims. Refer to page 4-7.
  - Digital-to-Analog Output Trim on 4-20 mA HART output (page 4-7)
  - Digital-to-Analog Output Trim on 4-20 mA HART output Using Other Scale (page 4-8)
- Sensor Trim: Adjusts the position of the factory sensor characterization curve due to a change in the sensor characteristics over time or a change in test equipment. Trimming has two steps, zero and sensor trims. Refer to page 4-10 and page 4-11.
  - Zero Trim (page 4-10)
  - Sensor Trim (page 4-11)

Figure 4-1 on page 4-3 illustrates 2051 transmitter data flow. Data flow can be summarized in four major steps:

1. A change in pressure is measured by a change in the sensor output (Sensor Signal).
2. The sensor signal is converted to a digital format that is understood by the microprocessor (Analog-to-Digital Signal Conversion). Sensor trim functions affect this value. Select these options to alter the digital signal on the LCD or HART Communicator.
3. Corrections are performed in the microprocessor to obtain a digital representation of the process input (Digital PV).
4. The Digital PV is converted to an analog value (Digital-to-Analog Signal Conversion). Rerange and Analog trim functions affect this value. Select these options to change the range points (4-20 mA or 1-5 Vdc).

For a summary of recommended calibration procedures, refer to Table 4-1 on page 4-3. Also, Figure 4-1 on page 4-3 identifies the approximate transmitter location for each calibration task. Data flows from left to right and a parameter change affects all values to the right of the changed parameter.

Figure 4-1. Transmitter Data Flow with Calibration Options

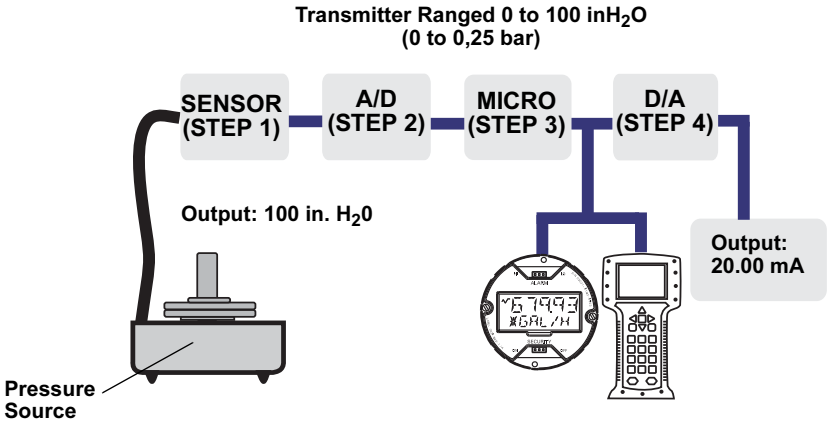

Table 4-1. Recommended Calibration Tasks

Transmitter	Bench Calibration Tasks	Field Calibration Tasks
2051CD 2051CG 2051L 2051TG, Range 1-4	1. Set output configuration parameters: a. Set the range points. b. Set the output units. c. Set the output type. d. Set the damping value. 2. *Optional*: Perform a sensor trim. (Accurate pressure source required.)	1. Reconfigure parameters if necessary. 2. Zero trim the transmitter to compensate for mounting effects or static pressure effects. 3. *Optional*: Perform an analog output trim. (Accurate multimeter required)
2051TA 2051TG, Range 5	1. Set output configuration parameters: a. Set the range points. b. Set the output units. c. Set the output type. d. Set the damping value. 2. *Optional*: Perform a sensor trim if equipment available (accurate absolute pressure source required), otherwise perform the low trim value section of the sensor trim procedure.	1. Reconfigure parameters if necessary. 2. Perform low trim value section of the sensor trim procedure to correct for mounting position effects. 3. *Optional*: Perform an analog output trim (Accurate multimeter required)

NOTE
The 2051 has been carefully calibrated at the factory. Trimming adjusts the position of the factory characterization curve. It is possible to degrade performance of the transmitter if any trim is done improperly or with inaccurate equipment.

NOTE
A HART communicator is required for all sensor and output trim procedures. Rosemount 2051C Range 4 and Range 5 transmitters require a special calibration procedure when used in differential pressure applications under high static line pressure (see“Compensating for Line Pressure” on page 4-13).

Determining Calibration Frequency

Calibration frequency can vary greatly depending on the application, performance requirements, and process conditions. Use the following procedure to determine calibration frequency that meets the needs of your application.

1. Determine the performance required for your application.
2. Determine the operating conditions.
3. Calculate the Total Probable Error (TPE).
4. Calculate the stability per month.
5. Calculate the calibration frequency.

Sample Calculation For A Standard 2051C

Step 1: Determine the performance required for your application.

Required Performance:	0.30% of span

Step 2: Determine the operating conditions.

Transmitter:	2051CD, Range 2 [URL=250 inH_2O(623 mbar)]
Calibrated Span:	150 inH_2O (374 mbar)
Ambient Temperature Change:	± 50 °F (28 °C)
Line Pressure:	500 psig (34,5 bar)

Step 3: Calculate total probable error (TPE).

$$\text{TPE} = \sqrt{(\text{ReferenceAccuracy})^2 + (\text{TemperatureEffect})^2 + (\text{StaticPressureEffect})^2} = 0.189\% \text{ of span}$$

Where:

Reference Accuracy = ± 0.075% of span

Ambient Temperature Effect =

$$\pm\left(\frac{0.025 \times \text{URL}}{\text{Span}} + 0.125\right) \text{per } 50\ ^\circ\text{F} = \pm 0.1666\% \text{ of span}$$

Span Static Pressure Effect(1) =

0.1% reading per 1000 psi (69 bar) = ±0.05% of span at maximum span

(1) Zero static pressure effect removed by zero trimming at line pressure.

Step 4: Calculate the stability per month.

$$\text{Stability} = \pm\left[\frac{(0.100 \times \text{URL})}{\text{Span}}\right]\% \text{ of span for 2 years} = \pm 0.0069\% \text{ of span per month}$$

Step 5: Calculate calibration frequency.

$$\text{Cal. Freq.} = \frac{(\text{Req. Performance} - \text{TPE})}{\text{Stability per Month}} = \frac{(0.3\% - 0.189\%)}{0.0069\%} = 16 \text{months}$$

Sample Calculation for 2051C with P8 option (0.065% accuracy & 5-year stability)

Step 1: Determine the performance required for your application.

Required Performance:	0.30% of span

Step 2: Determine the operating conditions.

Transmitter:	2051CD, Range 2 [URL=250 inH_2O(623 mbar)]
Calibrated Span:	150 inH_2O (374 mbar)
Ambient Temperature Change:	± 50 °F (28 °C)
Line Pressure:	500 psig (34,5 bar)

Step 3: Calculate total probable error (TPE).

$$\text{TPE} = \sqrt{(\text{ReferenceAccuracy})^2 + (\text{TemperatureEffect})^2 + (\text{StaticPressureEffect})^2} = 0.185\% \text{ of span}$$

Where:

Reference Accuracy = ± 0.065% of span

Ambient Temperature Effect =

$$\pm\left(\frac{0.025 \times \text{URL}}{\text{Span}} + 0.125\right) \text{per } 50\ ^\circ\text{F} = \pm 0.1666\% \text{ of span}$$

Span Static Pressure Effect(1) =

0.1% reading per 1000 psi (69 bar) = ±0.05% of span at maximum span

(1) Zero static pressure effect removed by zero trimming at line pressure.

Step 4: Calculate the stability per month.

$$\text{Stability} = \pm\left[\frac{(0.125 \times \text{URL})}{\text{Span}}\right] \% \text{ of span for 5 years} = \pm 0.0035\% \text{ of span per month}$$

Step 5: Calculate calibration frequency.

$$\text{Cal. Freq.} = \frac{(\text{Req. Performance} - \text{TPE})}{\text{Stability per Month}} = \frac{(0.3\% - 0.185\%)}{0.0035\%} = 32 \text{ months}$$

Choosing a Trim Procedure

To decide which trim procedure to use, you must first determine whether the analog-to-digital section or the digital-to-analog section of the transmitter electronics need calibration. Refer to Figure 4-1 and perform the following procedure:

1. Connect a pressure source, a HART Communicator or AMS, and a digital readout device to the transmitter.
2. Establish communication between the transmitter and the HART Communicator.
3. Apply pressure equal to the upper range point pressure.
4. Compare the applied pressure to the pressure process variable valve on the Process Variables menu on the HART Communicator or the Process Variables screen in AMS. For instructions on how to access process variables, see page 3-7 of Section 3: Configuration.
   a. If the pressure reading does not match the applied pressure (with high-accuracy test equipment), perform a sensor trim. See “Sensor Trim Overview” on page 4-10 to determine which trim to perform.
5. Compare the Analog Output (AO) line, on the HART Communicator or AMS, to the digital readout device.

If the AO reading does not match the digital readout device (with high-accuracy test equipment), perform an analog output trim. See “Analog Output Trim” on page 4-7.

ANALOG OUTPUT TRIM

The Analog Output Trim commands allow you to adjust the transmitter's current output at the 4 and 20 mA (1 and 5 Vdc) points to match the plant standards. This command adjusts the digital to analog signal conversion.

Figure 4-2. Output Trim

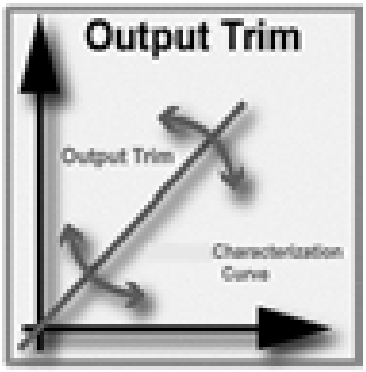

Digital-to-Analog Trim

HART Communicator

4-20 mA Fast Keys	1, 2, 3, 2, 1
1-5 Vdc Fast Keys	1, 2, 3, 2, 1

To perform a digital-to-analog trim with a HART Communicator, perform the following procedure.

1. From the **HOME** screen, enter the fast key sequence "Digital-to-Analog Trim." Select **OK** after setting the control loop to manual, see "Setting the Loop to Manual" on page 3-2.
2. a. For 4-20 mA HART output, connect a reference meter to the transmitter by either connecting the meter to the test terminals on the terminal block, or shunting transmitter power through the meter at some point in the loop.
   b. For 1-5 Vdc Low Power HART output, connect a reference meter to the V_{out} terminal.
3. Select **OK** after connecting the reference meter.
4. Select **OK** at the **SETTING FLD DEV OUTPUT TO 4 MA (1 Vdc)** prompt. The transmitter outputs 4.0 mA.
5. Record the actual value from the reference meter, and enter it at the **ENTER METER VALUE** prompt. The HART Communicator prompts you to verify whether or not the output value equals the value on the reference meter.
6. Select 1: Yes, if the reference meter value equals the transmitter output value, or 2: No if it does not.
   a. If 1 is selected: Yes, proceed to Step 7.
   b. If 2 is selected: No, repeat Step 5.
7. Select **OK** at the **SETTING FLD DEV OUTPUT TO 20 MA (5 Vdc)** prompt, and repeat Steps 5 and 6 until the reference meter value equals the transmitter output value.
8. Select **OK** after the control loop is returned to automatic control.

AMS

Right click on the device and select “Calibrate,” then “D/A Trim” from the menu.

1. Click **Next** after setting the control loop to manual.
2. Click **Next** after connecting the reference meter.
3. Click **Next** at the “Setting fld dev output to 4mA (1 Vdc)” screen.
4. Record the actual value from the reference meter, and enter it at the “Enter meter value” screen and click **Next**.
5. Select **Yes**, if the reference meter value equals the transmitter output value, or **No** if it does not. Click **Next**.
   a. If Yes is selected, proceed to Step 6.
   b. If No is selected, repeat Step 4.
6. Click **Next** at the “Setting fld dev output to 20mA (5 Vdc)” screen.
7. Repeat Step 4 - Step 5 until the reference meter equals the transmitter output value.
8. Select **Next** to acknowledge the loop can be returned to automatic control.
9. Select **Finish** to acknowledge the method is complete.

Digital-to-Analog Trim Using Other Scale

The Scaled D/A Trim command matches the 4 and 20 mA (1 and 5 Vdc) points to a user selectable reference scale other than 4 and 20 mA (for example, 2 to 10 volts if measuring across a 500 ohm load, or 0 to 100 percent if measuring from a Distributed Control System (DCS)). To perform a scaled D/A trim, connect an accurate reference meter to the transmitter and trim the output signal to scale, as outlined in the Output Trim procedure.

NOTE
Use a precision resistor for optimum accuracy. If you add a resistor to the loop, ensure that the power supply is sufficient to power the transmitter to a 20 mA output with additional loop resistance. Refer to “Power Supply for 4-20 mA HART” on page 2-27.

HART Communicator

4-20 mA Fast Keys	1, 2, 3, 2, 2
1-5 Vdc Fast Keys	1, 2, 3, 2, 2

AMS

Right click on the device and select “Calibrate,” then “Scaled D/A trim” from the menu.

1. Click **Next** after setting the control loop to manual.
2. Select **Change** to change scale, click **Next**.
3. Enter Set scale-Lo output value, click **Next**.
4. Enter Set scale-Hi output value, click **Next**.
5. Click **Next** to proceed with Trim.
6. Click **Next** after connecting the reference meter.
7. Click **Next** at the “Setting fld dev output to 4 mA” screen.
8. Record the actual value from the reference meter, and enter it at the “Enter meter value” screen and click **Next**.
9. Select **Yes**, if the reference meter value equals the transmitter output value, or **No** if it does not. Click **Next**.
   a. If Yes is selected, proceed to Step 10.
   b. If No is selected, repeat Step 8.
10. Click **Next** at the “Setting fld dev output to 20mA” screen.
11. Repeat Step 8 - Step 9 until the reference meter equals the transmitter output value.
12. Select **Next** to acknowledge the loop can be returned to automatic control.
13. Select **Finish** to acknowledge the method is complete.

Recall Factory Trim—Analog Output

The Recall Factory Trim—Analog Output command allows the restoration of the as-shipped factory settings of the analog output trim. This command can be useful for recovering from an inadvertent trim, incorrect Plant Standard or faulty meter. This command is only available with 4-20 mA output.

HART Communicator

4-20 mA Fast Keys	1, 2, 3, 4, 2

AMS

Right click on the device and select “Calibrate,” then “Recall Factory Trim” from the menu.

1. Click **Next** after setting the control loop to manual.
2. Select “Analog output trim” under “Trim to recall” and click **Next**.
3. Click **Next** to acknowledge restoration of trim values is complete.
4. Select **Next** to acknowledge the loop can be returned to automatic control.
5. Select **Finish** to acknowledge the method is complete.

SENSOR TRIM

Sensor Trim Overview

Trim the sensor using either sensor or zero trim functions. Trim functions vary in complexity and are application-dependent. Both trim functions alter the transmitter's interpretation of the input signal.

Zero trim is a single-point offset adjustment. It is useful for compensating for mounting position effects and is most effective when performed with the transmitter installed in its final mounting position. Since this correction maintains the slope of the characterization curve, it should not be used in place of a sensor trim over the full sensor range.

When performing a zero trim, ensure that the equalizing valve is open and all wet legs are filled to the correct levels.

NOTE
Do not perform a zero trim on Rosemount 2051T Absolute pressure transmitters. Zero trim is zero based, and absolute pressure transmitters reference absolute zero. To correct mounting position effects on a 2051T Absolute Pressure Transmitter, perform a low trim within the sensor trim function. The low trim function provides an offset correction similar to the zero trim function, but it does not require zero-based input.

Sensor trim is a two-point sensor calibration where two end-point pressures are applied, and all output is linearized between them. Always adjust the low trim value first to establish the correct offset. Adjustment of the high trim value provides a slope correction to the characterization curve based on the low trim value. The trim values allow you to optimize performance over your specified measuring range at the calibration temperature.

Figure 4-3. Sensor Trim

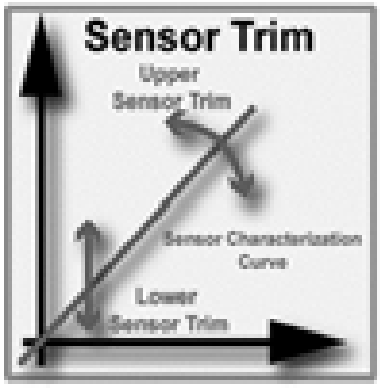

Zero Trim

NOTE
The transmitter must be within three percent of true zero (zero-based) in order to calibrate with zero trim function.

HART Communicator

4-20 mA Fast Keys	1, 2, 3, 3, 1
1-5 Vdc Fast Keys	1, 2, 3, 3, 1

Calibrate the sensor with a HART Communicator using the zero trim function as follows:

1. Vent the transmitter and attach a HART Communicator to the measurement loop.
2. From the **HOME** screen, follow the fast key sequence “Zero Trim.”
3. Follow the commands provided by the HART Communicator to complete the zero trim adjustment.

AMS

Right click on the device and select “Calibrate,” then “Zero trim” from the menu.

1. Click **Next** after setting the control loop to manual.
2. Click **Next** to acknowledge warning.
3. Click **Next** after applying appropriate pressure to sensor.
4. Select **Next** to acknowledge the loop can be returned to automatic control.
5. Select **Finish** to acknowledge the method is complete.

Sensor Trim

NOTE
Use a pressure input source that is at least three times more accurate than the transmitter, and allow the input pressure to stabilize for ten seconds before entering any values.

HART Communicator

4-20 mA Fast Keys	1, 2, 3, 3
1-5 Vdc Fast Keys	1, 2, 3, 3

To calibrate the sensor with a HART Communicator using the sensor trim function, perform the following procedure:

1. Assemble and power the entire calibration system including a transmitter, HART Communicator, power supply, pressure input source, and readout device.
2. From the **HOME** screen, enter the fast key sequence under “Sensor Trim.”
3. Select 2: Lower sensor trim. The lower sensor trim value should be the sensor trim point that is closest to zero.

Examples:

Calibration: 0 to 100 "H_2O - lower trim = 0, upper trim = 100

Calibration: -100 to 0 "H_2O - lower trim = 0, upper trim = -100

Calibration: -100 to 100 "H_2O - lower trim = -100 or 100,
upper trim = -100 or 100

NOTE
Select pressure input values so that lower and upper values are equal to or outside the 4 and 20 mA (1 and 5 Vdc) points. Do not attempt to obtain reverse output by reversing the high and low points. This can be done by going to “Rerange” on page 3-9 of Section 3: Configuration. The transmitter allows approximately five percent deviation.

4. Follow the commands provided by the HART Communicator to complete the adjustment of the lower value.
5. Repeat the procedure for the upper value, replacing 2: Lower sensor trim with 3: Upper sensor trim in Step 3.

AMS

Right click on the device and select “Calibrate,” then “Sensor trim” from the menu.

1. Select “Lower sensor trim.” The lower sensor trim value should be the sensor trim point that is closest to zero.
2. Click **Next** after setting the control loop to manual.
3. Click **Next** after applying appropriate pressure to sensor.
4. Select **Next** to acknowledge the loop can be returned to automatic control.
5. Select **Finish** to acknowledge the method is complete.
6. Right click on the device and select “Calibrate,” select “Sensor trim” from the menu.
7. Select “Upper sensor trim” and repeat steps 2-5.

Recall Factory Trim—Sensor Trim

The Recall Factory Trim—Sensor Trim command allows the restoration of the as-shipped factory settings of the sensor trim. This command can be useful for recovering from an inadvertent zero trim of an absolute pressure unit or inaccurate pressure source. This command is only available with 4-20 mA output.

HART Communicator

4-20 mA Fast Keys	1, 2, 3, 4, 1

AMS

Right click on the device and select “Calibrate,” then “Recall Factory Trim” from the menu.

1. Click **Next** after setting the control loop to manual.
2. Select “Sensor trim” under “Trim to recall” and click **Next**.
3. Click **Next** to acknowledge restoration of trim values is complete.
4. Select **Next** to acknowledge the loop can be returned to automatic control.
5. Select **Finish** to acknowledge the method is complete.

Compensating for Line Pressure

Rosemount 2051 Range 4 and 5 pressure transmitters require a special calibration procedure when used in differential pressure applications. The purpose of this procedure is to optimize transmitter performance by reducing the effect of static line pressure in these applications. The 2051 differential pressure transmitters (Ranges 1, 2, and 3) do not require this procedure because optimization occurs in the sensor.

Applying high static pressure to 2051 Range 4 and Range 5 pressure transmitters causes a systematic shift in the output. This shift is linear with static pressure; correct it by performing the Sensor Trim procedure on page 4-11.

The following specifications show the static pressure effect for 2051 Range 4 and Range 5 transmitters used in differential pressure applications:

Zero Effect:
± 0.1% of the upper range limit per 1000 psi (69 bar) for line pressures from 0 to 2000 psi (0 to 138 bar)

For line pressures above 2000 psi (138 bar), the zero effect error is ± 0.2% of the upper range limit plus an additional ± 0.2% of upper range limit error for each 1000 psi (69 bar) of line pressure above 2000 psi (138 bar).

Example: Line pressure is 3000 psi (3 kpsi). Zero effect error calculation:

± {0.2 + 0.2 x [3 kpsi - 2 kpsi]} = ± 0.4% of the upper range limit

Span Effect:
Correctable to ±0.2% of reading per 1000 psi (69 bar) for line pressures from 0 to 3626 psi (0 to 250 bar)

The systematic span shift caused by the application of static line pressure is -1.00% of reading per 1000 psi (69 bar) for Range 4 transmitters, and -1.25% of reading per 1000 psi (69 bar) for Range 5 transmitters.

Use the following example to compute corrected input values.

Example
A Range 4 transmitter with model number 2051_CD4 will be used in a differential pressure application where the static line pressure is 1200 psi (83 bar). The transmitter output is ranged with 4 mA at 500 inH_2O (1,2 bar) and 20 mA at 1500 inH_2O (3,7 bar).

To correct for systematic error caused by high static line pressure, first use the following formulas to determine corrected values for the low trim and high trim.

Low Trim Value

LT = LRV - (S/100 x P/1000 x LRV)

Where:	LT =	Corrected Low Trim Value
	LRV =	Lower Range Value
	S =	Span shift per specification (as a percent of reading)
	P =	Static Line Pressure in psi

In this example:

LRV =	500 inH_2O (1.24 bar)
S =	-1.00%
P =	1200 psi
LT =	500 inH_2O - (-1%/100 x 1200 psi/1000 x 500 inH_2O)
LT =	506 inH_2O

High Trim Value

HT = (URV - (S/100 x P/1000 x URV)

Where:	HT =	Corrected High Trim Value
	URV =	Upper Range Value
	S =	Span shift per specification (as a percent of reading)
	P =	Static Line Pressure in psi

In this example:

URV =	1500 inH_2O (3.74 bar)
S =	-1.00%
P =	1200 psi
HT =	1500 - (-1%/100 x 1200 psi/1000 x 1500 inH_2O)
HT =	1518 inH_2O

Complete the Sensor Trim procedure as described on page 4-11. In the example above, at step 4, apply the nominal pressure value of 500 inH_2O. However, enter the calculated correct lower trim (LT) value of 506 inH_2O with the HART Communicator. Repeat the procedure for the upper value.

NOTE
The range values for the 4 and 20 mA (1 and 5 Vdc) points should be at the nominal URV and LRV. In the example above, the values are 1500 inH_2O and 500 inH_2O respectively. Confirm the values on the HOME screen on the HART Communicator. Modify, if needed, by following the steps in the Rerange section on page 3-10.

Section 5 Troubleshooting

Overview . . . . . **page 5-1**
Safety Messages . . . . . **page 5-1**
Diagnostic Messages . . . . . **page 5-3**
Disassembly Procedures . . . . . **page 5-8**
Reassembly Procedures . . . . . **page 5-10**

OVERVIEW

Table 5-1 provides summarized maintenance and troubleshooting suggestions for the most common operating problems.

If you suspect malfunction despite the absence of any diagnostic messages on the HART Communicator display, consider using Table 5-1 on page 5-2 to identify any potential problem.

SAFETY MESSAGES

Procedures and instructions in this section may require special precautions to ensure the safety of the personnel performing the operations. Information that raises potential safety issues is indicated by a warning symbol (⚠). Refer to the following safety messages before performing an operation preceded by this symbol.

Warnings (⚠)

⚠WARNING

Explosions could result in death or serious injury:
Installation of this transmitter in an explosive environment must be in accordance with the appropriate local, national, and international standards, codes, and practices. Please review the approvals section of the 2051 reference manual for any restrictions associated with a safe installation.

- Before connecting a HART communicator in an explosive atmosphere, ensure the instruments in the loop are installed in accordance with intrinsically safe or non-incendive field wiring practices.
- In an Explosion-Proof/Flameproof installation, do not remove the transmitter covers when power is applied to the unit.

Process leaks may cause harm or result in death.

- Install and tighten process connectors before applying pressure.

Electrical shock can result in death or serious injury.

- Avoid contact with the leads and terminals. High voltage that may be present on leads can cause electrical shock.

Table 5-1. Rosemount 2051 Troubleshooting Table for 4-20 mA output

Symptom	Corrective Actions
Transmitter milliamp reading is zero	Verify power is applied to signal terminals Check power wires for reversed polarity Verify terminal voltage is 10.5 to 42.4 Vdc Check for open diode across test terminal
Transmitter Not Communicating with HART Communicator	Verify the output is between 4 and 20 mA or saturation levels Verify terminal voltage is 10.5 to 42.4 Vdc Verify clean DC Power to transmitter (Max AC noise 0.2 volts peak to peak) Check loop resistance, 250 Ω minimum (PS voltage -transmitter voltage/loop current) Have HART Communicator poll for all addresses
Transmitter milliamp reading is low or high	Verify applied pressure Verify 4 and 20 mA range points Verify output is not in alarm condition Verify if 4 – 20 mA output trim is required
Transmitter will not respond to changes in applied pressure	Check test equipment Check impulse piping or manifold for blockage Verify the transmitter is not in multidrop mode Verify applied pressure is between the 4 and 20 mA set points Verify output is not in alarm condition Verify transmitter is not in Loop Test mode
Digital Pressure Variable reading is low or high	Check test equipment (verify accuracy) Check impulse piping for blockage or low fill in wet leg Verify transmitter is calibrated properly Verify pressure calculations for application
Digital Pressure Variable reading is erratic	Check application for faulty equipment in pressure line Verify transmitter is not reacting directly to equipment turning on/off Verify damping is set properly for application
Milliamp reading is erratic	Verify power source to transmitter has adequate voltage and current Check for external electrical interference Verify transmitter is properly grounded Verify shield for twisted pair is only grounded at one end

DIAGNOSTIC MESSAGES

In addition to the output, the LCD meter displays abbreviated operation, error, and warning messages for troubleshooting the transmitter. Messages appear according to their priority, with normal operating messages appearing last. To determine the cause of a message, use a HART Communicator or AMS to further interrogate the transmitter. A description of each LCD diagnostic message follows.

Error

Error messages appear on the LCD display to inform you of serious problems affecting the operation of the transmitter. The LCD displays an error message until the error condition is corrected, and the analog output is driven to the specified alarm level. No other transmitter information is displayed during an alarm condition.

FAIL
The transmitter CPU board and the sensor module are incompatible. See “Disassembly Procedures” on page 5-8.

Fail Module
The sensor module is disconnected or is malfunctioning. Verify that the sensor module ribbon cable is connected to the back of the electronics board. If the ribbon cable is properly connected, there is a problem within the sensor module. Possible sources of problems include:

- Pressure or temperature updates are not being received in the sensor module.
- A non-volatile memory fault that will effect transmitter operation has been detected in the module by the memory verification routine.

Some non-volatile memory faults are user-repairable. Use a HART Communicator to diagnose the error and determine if it is repairable. Any error message that ends in “FACTORY” is not repairable. In cases of non user-repairable errors, you must replace the transmitter.

Fail Elect
The transmitter electronics board is malfunctioning due to an internal fault. Some of the FAIL ELECT errors are user-repairable. Use a 275 HART Communicator to diagnose the error and determine if it is repairable. Any error message that ends in “FACTORY” is not repairable. In cases of non user-repairable errors, you must replace the electronics board. See “Disassembly Procedures” on page 5-3.

Fail Config
A memory fault has been detected in a location that could effect transmitter operation, and is user-accessible. To correct this problem, use a HART Communicator to interrogate and reconfigure the appropriate portion of the transmitter memory.

Warnings

Warnings appear on the LCD display to alert you of user-repairable problems with the transmitter, or current transmitter operations. Warnings appear alternately with other transmitter information until the warning condition is corrected or the transmitter completes the operation that warrants the warning message.

Press Limit
The process variable read by the transmitter is outside of the transmitter's range.

Temp Limit
The secondary temperature variable read by the transmitter is outside of the transmitter's range.

Curr Fixed
The transmitter is in multidrop mode. The analog output is not tracking pressure changes.

Curr Saturd
The pressure read by the module is outside of the specified range, and the analog output has been driven to saturation levels.

Loop Test
A loop test is in progress. During a loop test or 4–20 mA trim, the analog output is set to a fixed value. The meter display alternates between the current selected in milliamps and "LOOP TEST."

Xmtr Info
A non-volatile memory fault has been detected in the transmitter memory by the memory verification routine. The memory fault is in a location containing transmitter information. To correct this problem, use a HART Communicator to interrogate and reconfigure the appropriate portion of the transmitter memory. This warning does not effect the transmitter operation.

Operation

Normal operation messages appear on the LCD meter to confirm actions or inform you of transmitter status. Operation messages are displayed with other transmitter information, and warrant no action to correct or alter the transmitter settings.

Zero Pass
The zero value, set with the local zero adjustment button, has been accepted by the transmitter, and the output should change to 4 mA (1 Vdc).

Zero Fail
The zero value, set with the local zero adjustment button, exceeds the maximum rangedown allowed for a particular range, or the pressure sensed by the transmitter exceeds the sensor limits.

Span Pass
The span value, set with the local span adjustment button, has been accepted by the transmitter, and the output should change to 20 mA (5 Vdc).

Span Fail
The span value, set with the local span adjustment button, exceeds the maximum rangedown allowed for a particular range, or the pressure sensed by the transmitter exceeds the sensor limits.

LOCAL DSBLD
This message appears during reranging with the integral zero and span buttons and indicates that the transmitter local zero and span adjustments have been disabled. The adjustments may have been disabled by the transmitter security jumper on the transmitter circuit board or through software commands from the HART Communicator. See “Security (Write Protect)” on page 2-14 for information on the position of the security jumper and information on software lockout.

Write Protect
This message appears if you attempt to change the transmitter configuration data while the security jumper is in the **ON** position. See “Security (Write Protect)” on page 2-14 for more information about the security jumper.

HART Communicator Diagnostics

Table 5-2 is a list of messages used by the HART Communicator (HC) and their corresponding descriptions.

Variable parameters within the text of a message are indicated with <*variable parameter*>.

Reference to the name of another message is identified by *[another message]*.

Table 5-2. HART Communicator Messages

Message	Description
1k snsr EEPROM error-factory ON	Replace the transmitter
1k snsr EEPROM error-user-no out ON	Use the HART communicator to reset the following parameters: remote seal isolator, remote seal fill fluid, flange material, o-ring material, transmitter type, remote seal type, flange type, meter type, number of remote seals.
1k snsr EEPROM error-user ON	Perform a full trim to recalibrate the transmitter.
4k micro EEPROM error-factory ON	Replace the electronics board.
4k micro EEPROM error-user-no out ON	Use the HART communicator to reset the message field.
4k micro EEPROM error-user ON	Use the HART communicator to reset the following parameters: units, range values, damping, analog output, transfer function, tag, scaled meter values. Perform a D/A trim to ensure that the error is corrected.
4k snsr EEPROM error-factory ON	Replace the transmitter.
4k snsr EEPROM error-user ON	Use the HART communicator to reset the temperature units and the calibration type.
Add item for ALL device types or only for this ONE device type.	Asks the user whether the hot key item being added should be added for all device types or only for the type of device that is connected.
Command Not Implemented	The connected device does not support this function.
Communication Error	The communicator and the device are not communicating correctly. Check all connections between the HART Communicator and the device and resend the information.

Message	Description
Configuration memory not compatible with connected device	The configuration stored in memory is incompatible with the device to which a transfer has been requested.
CPU board not initialized ON	The electronics board is not initialized. Replace the electronics board.
CPU EEPROM write failure ON	Message sent to electronics board from HART signal failed. Replace the electronics board.
Device Busy	The connected device is busy performing another task.
Device Disconnected	The device failed to respond to a command. Check all connections between the HART Communicator and the device and resend the command.
Device write protected	Device is in write-protect mode. Data can not be written.
Device write protected. Do you still want to shut off?	Device is in write-protect mode. Press YES to turn the HART communicator off and lose the unsent data.
Display value of variable on hotkey menu?	Asks whether the value of the variable should be displayed adjacent to its label on the hotkey menu if the item being added to the hotkey menu is a variable.
Download data from configuration memory to device	Press the SEND softkey to transfer information from the communicator memory to the device.
Exceed field width	Indicates that the field width for the current arithmetic variable exceeds the device-specified description edit format.
Exceed precision	Indicates that the precision for the current arithmetic variable exceeds the device-specified description edit format.
Ignore next 50 occurrences of status?	Select YES to ignore the next 50 occurrences of device status, or select no to display every occurrence.
Illegal character	An invalid character for the variable type was entered.
Illegal date	The day portion of the date is invalid.
Illegal month	The month portion of the date is invalid.
Illegal year	The year portion of the date is invalid.
Incompatible CPU board and module ON	Upgrade the electronics board or the sensor module to the current revision.
Incomplete exponent	The exponent of a scientific notation floating point variable is incomplete.
Incomplete field	The value entered is not complete for the variable type.
Looking for a device	Polling for multidropped devices at addresses 1–15.
Local buttons operator error ON	Illegal pressure applied during zero or span operation. Repeat the process after verifying the correct pressures.
Mark as read only variable on hotkey menu?	Asks whether the user should be allowed to edit the variable from the hotkey menu if the item being added to the hotkey menu is a variable.
Module EEPROM write failure ON	Message sent to the module from the HART signal failed. Replace the transmitter.
No device configuration in configuration memory	There is no configuration saved in memory available to re-configure off-line or transfer to a device.
No Device Found	Poll of address zero fails to find a device, or poll of all addresses fails to find a device if auto-poll is enabled.
No hotkey menu available for this device.	There is no menu named “hotkey” defined in the device description for this device.
No pressure updates ON	No pressure updates being received from the sensor module. Verify that the sensor module ribbon cable is attached correctly. Or replace the transmitter.
No offline devices available.	There are no device descriptions available to be used to configure a device offline.
No simulation devices available.	There are no device descriptions available to simulate a device.

Message	Description
No temperature updates ON	No temperature updates being received from the sensor module. Verify that the sensor module ribbon cable is attached correctly. Or replace the transmitter.
No UPLOAD_VARIABLES in ddl for this device	There is no menu named “upload_variables” defined in the device description for this device. This menu is required for offline configuration.
No Valid Items	The selected menu or edit display contains no valid items.
OFF KEY DISABLED	Appears when the user attempts to turn the HC off before sending modified data or before completing a method.
Online device disconnected with unsent data. RETRY or OK to lose data.	There is unsent data for a previously connected device. Press RETRY to send data, or press OK to disconnect and lose unsent data.
Out of memory for hotkey configuration. Delete unnecessary items.	There is no more memory available to store additional hotkey items. Unnecessary items should be deleted to make space available.
Overwrite existing configuration memory	Requests permission to overwrite existing configuration either by a device-to-memory transfer or by an offline configuration. User answers using the softkeys.
Press OK...	Press the OK softkey. This message usually appears after an error message from the application or as a result of HART communications.
Restore device value?	The edited value that was sent to a device was not properly implemented. Restoring the device value returns the variable to its original value.
ROM checksum error ON	Checksum of transmitter software has detected a fault. Replace the electronics board.
Save data from device to configuration memory	Prompts user to press SAVE softkey to initiate a device-to-memory transfer.
Saving data to configuration memory.	Data is being transferred from a device to configuration memory.
Sending data to device.	Data is being transferred from configuration memory to a device.
Sensor board not initialized ON	The sensor module electronics board is not initialized. Replace the transmitter.
There are write only variables which have not been edited. Please edit them.	There are write-only variables which have not been set by the user. These variables should be set or invalid values may be sent to the device.
There is unsent data. Send it before shutting off?	Press YES to send unsent data and turn the HC off. Press NO to turn the HC off and lose the unsent data.
Too few data bytes received	Command returns fewer data bytes than expected as determined by the device description.
Transmitter Fault	Device returns a command response indicating a fault with the connected device.
Units for <variable label> has changed. Unit must be sent before editing, or invalid data will be sent.	The engineering units for this variable have been edited. Send engineering units to the device before editing this variable.
Unsent data to online device. SEND or LOSE data	There is unsent data for a previously connected device which must be sent or thrown away before connecting to another device.
Upgrade 275 software to access XMTR function. Continue with old description?	The communicator does not contain the most recent 2051 Device Descriptors (DDs). Select YES to communicate using the existing DDs. Select NO to abort communication.
Use up/down arrows to change contrast. Press DONE when done.	Gives direction to change the contrast of the HC display.

Message	Description
Value out of range	The user-entered value is either not within the range for the given type and size of variable or not within the min/max specified by the device.
<message> occurred reading/writing <variable label>	Either a read/write command indicates too few data bytes received, transmitter fault, invalid response code, invalid response command, invalid reply data field, or failed pre- or post-read method; or a response code of any class other than SUCCESS is returned reading a particular variable.
<variable label> has an unknown value. Unit must be sent before editing, or invalid data will be sent.	A variable related to this variable has been edited. Send related variable to the device before editing this variable.

DISASSEMBLY PROCEDURES

⚠ Do not remove the instrument cover in explosive atmospheres when the circuit is live.

Remove from Service

Follow these steps:

- Follow all plant safety rules and procedures.
- Isolate and vent the process from the transmitter before removing the transmitter from service.
- Remove all electrical leads and disconnect conduit.
- Remove the transmitter from the process connection.
  - The Rosemount 2051C transmitter is attached to the process connection by four bolts and two cap screws. Remove the bolts and separate the transmitter from the process connection. Leave the process connection in place and ready for re-installation.
  - The Rosemount 2051T transmitter is attached to the process by a single hex nut process connection. Loosen the hex nut to separate the transmitter from the process. Do not wrench on neck of transmitter.
- Do not scratch, puncture, or depress the isolating diaphragms.
- Clean isolating diaphragms with a soft rag and a mild cleaning solution, and rinse with clear water.
- For the 2051C, whenever you remove the process flange or flange adapters, visually inspect the PTFE o-rings. Replace the o-rings if they show any signs of damage, such as nicks or cuts. Undamaged o-rings may be reused.

Remove Terminal Block

Electrical connections are located on the terminal block in the compartment labeled “FIELD TERMINALS.”

1. Remove the housing cover from the field terminal side.
2. Loosen the two small screws located on the assembly in the 9 o’clock and 3 o’clock positions.
3. Pull the entire terminal block out to remove it.

⚠ See “Safety Messages” on page 5-1 for complete warning information.

Remove the Electronics Board

The transmitter electronics board is located in the compartment opposite the terminal side. To remove the electronics board perform the following procedure:

1. Remove the housing cover opposite the field terminal side.
2. If you are disassembling a transmitter with a LCD display, loosen the two captive screws that are visible on the right and left side of the meter display.
3. ⚠ Loosen the two captive screws that anchor the board to the housing. The electronics board is electrostatically sensitive; observe handling precautions for static-sensitive components. Use caution when removing the LCD as there is an electronic pin connector that interfaces between the LCD and electronics board. The two screws anchor the LCD display to the electronics board and the electronics board to the housing.
4. Using the two captive screws, slowly pull the electronics board out of the housing. The sensor module ribbon cable holds the electronics board to the housing. Disengage the ribbon cable by pushing the connector release.

Remove the Sensor Module from the Electronics Housing

1. Remove the electronics board. Refer to “Remove the Electronics Board” on page 5-9.

IMPORTANT
To prevent damage to the sensor module ribbon cable, disconnect it from the electronics board before you remove the sensor module from the electrical housing.

2. Carefully tuck the cable connector completely inside of the internal black cap.

NOTE
Do not remove the housing until after you tuck the cable connector completely inside of the internal black cap. The black cap protects the ribbon cable from damage that can occur when you rotate the housing.

3. Loosen the housing rotation set screw with a $^{5}/_{64}$-inch hex wrench, and loosen one full turn.
4. Unscrew the module from the housing, making sure the black cap and sensor cable do not catch on the housing.

REASSEMBLY PROCEDURES

1. Inspect all cover and housing (non-process wetted) O-rings and replace if necessary. Lightly grease with silicone lubricant to ensure a good seal.
2. Carefully tuck the cable connector completely inside the internal black cap. To do so, turn the black cap and cable counterclockwise one rotation to tighten the cable.
3. Lower the electronics housing onto the module. Guide the internal black cap and cable through the housing and into the external black cap.
4. Turn the module clockwise into the housing.

IMPORTANT
Make sure the sensor ribbon cable and internal black cap remain completely free of the housing as you rotate it. Damage can occur to the cable if the internal black cap and ribbon cable become hung up and rotate with the housing.

5. Thread the housing completely onto the sensor module. The housing must be no more than one full turn from flush with the sensor module to comply with explosion proof requirements.
6. Tighten the housing rotation set screw using a $^{5}/_{64}$-inch hex wrench.

Attach the Electronics Board

1. Remove the cable connector from its position inside of the internal black cap and attach it to the electronics board.
2. Using the two captive screws as handles, insert the electronics board into the housing. Make sure the posts from the electronics housing properly engage the receptacles on the electronics board. Do not force. The electronics board should slide gently on the connections.
3. Tighten the captive mounting screws.
4. Replace the electronics housing cover. The transmitter covers must be engaged metal-to-metal to ensure a proper seal and to meet Explosion-Proof requirements.

Install the Terminal Block

1. Gently slide the terminal block into place, making sure the two posts from the electronics housing properly engage the receptacles on the terminal block.
2. Tighten the captive screws.
3. Replace the electronics housing cover. The transmitter covers must be fully engaged to meet Explosion-Proof requirements.

Reassemble the 2051C Process Flange

1. Inspect the sensor module PTFE o-rings. Undamaged o-rings may be reused. Replace o-rings that show any signs of damage, such as nicks, cuts, or general wear.

NOTE
If you are replacing the o-rings, be careful not to scratch the o-ring grooves or the surface of the isolating diaphragm when removing the damaged o-rings.

2. Install the process connection. Possible options include:

See “Safety Messages” on page 5-1 for complete warning information.

a. Coplanar Process Flange:

- Hold the process flange in place by installing the two alignment screws to finger tightness (screws are not pressure retaining). Do not overtighten as this will affect module-to-flange alignment.
- Install the four 1.75-in. flange bolts by finger tightening them to the flange.

b. Coplanar Process Flange with Flange Adapters:

- Hold the process flange in place by installing the two alignment screws to finger tightness (screws are not pressure retaining). Do not overtighten as this will affect module-to-flange alignment.
- Hold the flange adapters and adapter o-rings in place while installing the four configurations, use four 2.88-in. bolts. For gage pressure configurations, use two 2.88-in. bolts and two 1.75-in. bolts.

c. Manifold:

- Contact the manifold manufacturer for the appropriate bolts and procedures.

3. Tighten the bolts to the initial torque value using a crossed pattern. See Table 5-3 for appropriate torque values.

Table 5-3. Bolt Installation Torque Values

Bolt Material	Initial Torque Value	Final Torque Value
CS-ASTM-A445 Standard	300 in-lb. (34 N-m)	650 in-lb. (73 N-m)
316 SST—Option L4	150 in-lb. (17 N-m)	300 in-lb. (34 N-m)
ASTM-A-193-B7M—Option L5	300 in-lb. (34 N-m)	650 in-lb. (73 N-m)
ASTM-A-193 Class 2, Grade B8M—Option L8	150 in.-lb (17 N-m)	300 in.-lb (34 N-m)

NOTE
If you replaced the PTFE sensor module o-rings, re-torque the flange bolts after installation to compensate for cold flow.

NOTE
After replacing o-rings on Range 1 transmitters and re-installing the process flange, expose the transmitter to a temperature of 185 °F (85 °C) for two hours. Then re-tighten the flange bolts in a cross pattern, and again expose the transmitter to a temperature of 185 °F (85 °C) for two hours before calibration.

Install the Drain/Vent Valve

1. Apply sealing tape to the threads on the seat. Starting at the base of the valve with the threaded end pointing toward the installer, apply two clockwise turns of sealing tape.
2. Tighten the drain/vent valve to 250 in-lb. (28.25 N-m).
3. Take care to place the opening on the valve so that process fluid will drain toward the ground and away from human contact when the valve is opened.

Appendix A Reference Data

Performance Specifications . . . . . **page A-1**
Functional Specifications . . . . . **page A-4**
Physical Specifications . . . . . **page A-9**
Ordering Information . . . . . **page A-12**
Options . . . . . **page A-22**
Spare Parts . . . . . **page A-25**

PERFORMANCE SPECIFICATIONS

For zero based spans, reference conditions, silicone oil fill, SST materials, Coplanar flange (2051C) or 1/2 in. - 14 NPT (2051T) process connections, digital trim values range points. Applies to 4-20 mA HART output only unless otherwise noted.

Conformance To Specification (±3σ (Sigma))

Technology leadership, advanced manufacturing techniques and statistical process control ensure specification conformance to at least ±3σ.

Reference Accuracy(1)

Models		Standard		Performance Option, P8
2051C				
	Ranges 2-5	±0.075% of span For spans less than 10:1, accuracy = $\pm\left[0.025 + 0.005\left(\frac{URL}{Span}\right)\right]$% of Span	Ranges 2-5	High Accuracy Option, P8 ±0.065% of span For spans less than 10:1, accuracy = $\pm\left[0.015 + 0.005\left(\frac{URL}{Span}\right)\right]$% of Span
	Range 1	±0.10% of span For spans less than 15:1, accuracy = $\pm\left[0.025 + 0.005\left(\frac{URL}{Span}\right)\right]$% of Span		
2051T				
	Ranges 1-4	±0.075% of span For spans less than 10:1, accuracy = $\pm\left[0.0075\left(\frac{URL}{Span}\right)\right]$% of Span	Ranges 1-4	High Accuracy Option, P8 ±0.065% of span For spans less than 10:1, accuracy = $\pm\left[0.0075\left(\frac{URL}{Span}\right)\right]$% of Span
	Range 5	±0.075% of span for spans greater than 5:1		
2051L				
	Ranges 2-4	±0.075% of span For spans less than 10:1, accuracy = $\pm\left[0.025 + 0.005\left(\frac{URL}{Span}\right)\right]$% of Span		

(1) For FOUNDATION fieldbus transmitters, use calibrated range in place of span.

Long Term Stability

Models	Standard	Performance Option, P8
2051C[1]		
Ranges 2-5	±0.1% of URL for 2 years	±0.125% of URL for 5 years
2051CD		
Range 1	±0.2% of URL for 1 year	
2051T[1]		
Ranges 1-5	±0.1% of URL for 2 years	±0.125% of URL for 5 years

(1) Measured at reference conditions after exposure to temperature changes of up to ±50 °F (28 °C), and line pressure changes up to 1000 psi (6,9 mPa).

Dynamic Performance

	4 - 20 mA HART[1] 1-5 Vdc HART Lower Power[1]	Fieldbus[3]
Total Response Time (T_d + T_c)[2]:		
2051C, Range 3-5:	115 milliseconds	152 milliseconds
Range 1:	270 milliseconds	307 milliseconds
Range 2:	130 milliseconds	152 milliseconds
2051T:	100 milliseconds	152 milliseconds
2051L:	See *Instrument Toolkit*®	See *Instrument Toolkit*
Dead Time (Td)	60 milliseconds (nominal)	97 milliseconds
Update Rate	22 times per second	22 times per second

(1) Dead time and update rate apply to all models and ranges; analog output only
(2) Nominal total response time at 75 °F (24 °C) reference conditions.
(3) Transmitter fieldbus output only, segment macro-cycle not included.

Typical HART Transmitter Response Time

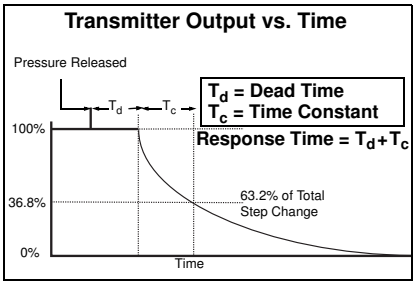

Line Pressure Effect per 1000 psi (6,9 MPa)

For line pressures above 2000 psi (13,7 MPa) and Ranges 4-5, see user manual (Rosemount publication number 00809-0100-4101).

Models	Line Pressure Effect
2051CD	Zero Error[1]
Ranges 2-3	±0.1% of URL/1000 psi (68,9 bar) for line pressures from 0 to 2000 psi (0 to 13,7 MPa)
Range 1	±0.5% of URL/1000 psi (68,9 bar)
	Span Error
Ranges 2-3	±0.1% of reading/1000 psi (68,9 bar)
Range 1	±0.4% of reading/1000 psi (68,9 bar)

(1) Can be calibrated out at line pressure.

Ambient Temperature Effect per 50°F (28°C)

Models		Ambient Temperature Effect
2051C		
	Ranges 2-5	±(0.025% URL + 0.125% span) from 1:1 to 5:1 ±(0.05% URL + 0.25% span) from 5:1 to 100:1
	Range 1	±(0.2% URL + 0.5% span) from 1:1 to 50:1
2051T		
	Range 2-4	±(0.05% URL + 0.25% span) from 1:1 to 30:1 ±(0.07% URL + 0.25% span) from 30:1 to 100:1
	Range 1	±(0.05% URL + 0.25% span) from 1:1 to 10:1 ±(0.10% URL + 0.25% span) from 10:1 to 100:1
	Range 5	±(0.2% URL + 0.3% span)
2051L		See *Instrument Toolkit*

Mounting Position Effects

Models	Mounting Position Effects
2051C	Zero shifts up to ±1.25 inH_2O (3,1 mbar), which can be calibrated out. No span effect.
2051T	Zero shifts up to ±2.5 inH_2O (6,2 mbar), which can be calibrated out. No span effect.
2051L	With liquid level diaphragm in vertical plane, zero shift of up to 1 inH_2O (2,49 mbar). With diaphragm in horizontal plane, zero shift of up to 5 inH_2O (12,43 mbar) plus extension length on extended units. Zero shifts can be calibrated out. No span effect.

Vibration Effect

Less than ±0.1% of URL when tested per the requirements of IEC60770-1 field or pipeline with high vibration level (10-60 Hz 0.21mm displacement peak amplitude / 60-2000 Hz 3g).

Power Supply Effect

Less than ±0.005% of calibrated span per volt.

Electromagnetic Compatibility (EMC)

Meets all relevant requirements of EN 61326 and NAMUR NE-21.

Transient Protection (Option Code T1)

Meets IEEE C62.41, Category Location B
6 kV crest (0.5 μs - 100 kHz)
3 kV crest (8 × 20 microseconds)
6 kV crest (1.2 × 50 microseconds)

FUNCTIONAL SPECIFICATIONS

Range and Sensor Limits

Range	2051CD, 2051CG, 2051L					
		Range and Sensor Limits				
			Lower (LRL)			
	Minimum Span	Upper (URL)	2051C Differential	2051C Gage(1)	2051L Differential	2051L Gage(1)
1	0.5 inH_2O (1,2 mbar)	25 inH_2O (62,3 mbar)	–25 inH_2O (–62,1 mbar)	–25 inH_2O (–62,1 mbar)	N/A	N/A
2	2.5 inH_2O (6,2 mbar)	250 inH_2O (0,62 bar)	–250 inH_2O (–0,62 bar)	–250 inH_2O (–0,62 bar)	–250 inH_2O (–0,62 bar)	–250 inH_2O (–0,62 bar)
3	10 inH_2O (24,9 mbar)	1000 inH_2O (2,49 bar)	-1000 inH_2O (-2,49 bar)	–393 inH_2O (–979 mbar)	–1000 inH_2O (–2,49 bar)	–393 inH_2O (–979 mbar)
4	3 psi (0,207 bar)	300 psi (20,6 bar)	-300 psi (-20,6 bar)	–14.2 psig (–979 mbar)	–300 psi (–20,7 bar)	–14.2 psig (–979 mbar)
5	20 psi (1,38 bar)	2000 psi (137,9 bar)	-2000 psi (-137,9 bar)	–14.2 psig (–979 mbar)	N/A	N/A

(1) Assumes atmospheric pressure of 14.7 psig.

Range	2051T			
		Range and Sensor Limits		
	Minimum Span	Upper (URL)	Lower (LRL) (Abs)	Lower(1) (LRL) (Gage)
1	0.3 psi (20,6 mbar)	30 psi (2,06 bar)	0 psia (0 bar)	–14.7 psig (–1,01 bar)
2	1.5 psi (0,103 bar)	150 psi (10,3 bar)	0 psia (0 bar)	–14.7 psig (–1,01 bar)
3	8 psi (0,55 bar)	800 psi (55,2 bar)	0 psia (0 bar)	–14.7 psig (–1,01 bar)
4	40 psi (2,76 bar)	4000 psi (275,8 bar)	0 psia (0 bar)	–14.7 psig (–1,01 bar)
5	2000 psi (137,9 bar)	10000 psi (689,4 bar)	0 psia (0 bar)	–14.7 psig (–1,01 bar)

(1) Assumes atmospheric pressure of 14.7 psig.

Service

Liquid, gas, and vapor applications

Protocols

4–20 mA HART (Output Code A)

Output
Two-wire 4–20 mA, user-selectable for linear or square root output. Digital process variable superimposed on 4–20 mA signal, available to any host that conforms to the *HART* protocol.

Power Supply
External power supply required. Standard transmitter operates on 10.5 to 42.4 V dc with no load.

Turn-On Time
Performance within specifications less than 2.0 sections after power is applied to the transmitter.

Load Limitations

Maximum loop resistance is determined by the voltage level of the external power supply, as described by:

Table A-1.

Maximum Loop Resistance = 43.5 * (Power Supply Voltage – 10.5)

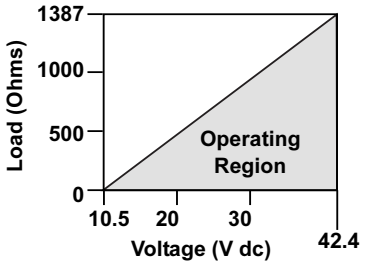

The HART communicator requires a minimum loop resistance of 250Ω for communication.

FOUNDATION™ fieldbus (Output Code F)

Power Supply

External power supply required; transmitters operate on 9.0 to 32.0 V dc transmitter terminal voltage.

Current Draw

17.5 mA for all configurations (including LCD display option)

Turn-On Time

Performance within specifications less than 20.0 sections after power is applied to the transmitter.

***FOUNDATION* fieldbus Function Block Execution Times**

Block	Execution Time
Resource	-
Transducer	-
LCD Block	-
Analog Input 1, 2	30 milliseconds
PID	45 milliseconds

***FOUNDATION* fieldbus Parameters**

Schedule Entries	7 (max.)
Links	20 (max.)
Virtual Communications Relationships (VCR)	12 (max.)

Standard Function Blocks

Resource Block

- Contains hardware, electronics, and diagnostic information.

Transducer Block

- Contains actual sensor measurement data including the sensor diagnostics and the ability to trim the pressure sensor or recall factory defaults.

LCD Block

- Configures the local display.

2 Analog Input Blocks

- Processes the measurements for input into other function blocks. The output value is in engineering units or custom and contains a status indicating measurement quality.

PID Block

- Contains all logic to perform PID control in the field including cascade and feedforward.

Backup Link Active Scheduler (LAS)

The transmitter can function as a Link Active Scheduler if the current link master device fails or is removed from the segment.

1-5 Vdc HART Low Power (Output Code M)

Output

Three wire 1–5 Vdc output, user-selectable for linear or square root output. Digital process variable superimposed on voltage signal, available to any host conforming to the *HART* protocol.

Power Supply

External power supply required. Standard transmitter operates on 9 to 28 Vdc with no load.

Power Consumption

3.0 mA, 27–84 mW

Output Load

100 kΩ or greater

Turn-On Time

Performance within specifications less than 2.0 sections after power is applied to the transmitter.

Overpressure Limits

Transmitters withstand the following limits without damage:

2051C

- Ranges 2–5: 3626 psig (250 bar)
  4500 psig (310,3 bar) for option code P9
- Range 1: 2000 psig (137,9 bar)

2051T

- Range 1: 750 psi (51,7 bar)
- Range 2: 1500 psi (103,4 bar)
- Range 3: 1600 psi (110,3 bar)
- Range 4: 6000 psi (413,7 bar)
- Range 5: 15000 psi (1034,2 bar)

2051L

Limit is flange rating or sensor rating, whichever is lower (see Table A-2).

Table A-2. 2051L Flange Rating

Standard	Type	CS Rating	SST Rating
ANSI/ASME	Class 150	285 psig	275 psig
ANSI/ASME	Class 300	740 psig	720 psig
At 100 °F (38 °C), the rating decreases with increasing temperature.			
DIN	PN 10–40	40 bar	40 bar
DIN	PN 10/16	16 bar	16 bar
At 248 °F (120 °C), the rating decreases with increasing temperature.			

Static Pressure Limit

2051CD

- Operates within specifications between static line pressures of -14.2 psig (0.034 bar) and 3626 psig (250 bar)
  - For Option Code P9, 4500 psig (310,3 bar)
- Range 1: 0.5 psia to 2000 psig (34 mbar and 137,9 bar)

Burst Pressure Limits

2051C Coplanar or traditional process flange

- 10000 psig (689,5 bar)

2051T

- Ranges 1–4: 11000 psi (758,4 bar)
- Range 5: 26000 psi (1792,64 bar)

Temperature Limits

Ambient

–40 to 185 °F (–40 to 85 °C)

With LCD display(1): –40 to 175 °F (–40 to 80 °C)

Storage

–50 to 230 °F (–46 to 110 °C)

With LCD display: –40 to 185 °F (–40 to 85 °C)

(1) LCD display may not be readable and LCD updates will be slower at temperatures below -4 °F (-20 °C).

Process Temperature Limits

At atmospheric pressures and above.

Table A-3. 2051 Process Temperature Limits

2051C	
Silicone Fill Sensor(1)	
with Coplanar Flange	–40 to 250 °F (–40 to 121 °C)(2)
with Traditional Flange	–40 to 300 °F (–40 to 149 °C)(2)
with Level Flange	–40 to 300 °F (–40 to 149 °C)(2)
with 305 Integral Manifold	–40 to 300 °F (–40 to 149 °C)(2)
Inert Fill Sensor(1)	0 to 185 °F (–18 to 85 °C)(3)
2051T (Process Fill Fluid)	
Silicone Fill Sensor(1)	–40 to 250 °F (–40 to 121 °C)(2)
Inert Fill Sensor(1)	–22 to 250 °F (–30 to 121 °C)(2)
2051L Low-Side Temperature Limits	
Silicone Fill Sensor(1)	–40 to 250 °F (–40 to 121 °C)(2)

Table A-3. 2051 Process Temperature Limits

Inert Fill Sensor(1)	0 to 185 °F (–18 to 85 °C)(2)
2051L High-Side Temperature Limits (Process Fill Fluid)	
Syltherm® XLT	–100 to 300 °F (–73 to 149 °C)
D.C. Silicone 704®	32 to 400 °F (0 to 205 °C)
D.C. Silicone 200	–40 to 400 °F (–40 to 205 °C)
Inert	–50 to 350 °F (–45 to 177 °C)
Glycerin and Water	0 to 200 °F (–18 to 93 °C)
Neobee M-20®	0 to 400 °F (–18 to 205 °C)
Propylene Glycol and Water	0 to 200 °F (–18 to 93 °C)

(1) Process temperatures above 185 °F (85 °C) require derating the ambient limits by a 1.5:1 ratio.
(2) 220 °F (104 °C) limit in vacuum service; 130 °F (54 °C) for pressures below 0.5 psia.
(3) 160 °F (71 °C) limit in vacuum service.

Humidity Limits

0–100% relative humidity

Volumetric Displacement

Less than 0.005 in^3 (0,08 cm^3)

Damping

Analog output response to a step input change is user-selectable from 0 to 25.6 seconds for one time constant. This software damping is in addition to sensor module response time.

Failure Mode Alarm

If self-diagnostics detect a sensor or microprocessor failure, the analog signal is driven either high or low to alert the user. High or low failure mode is user-selectable with a jumper on the transmitter. The values to which the transmitter drives its output in failure mode depend on whether it is factory-configured to *standard* or *NAMUR-compliant* operation. The values for each are as follows:

Standard Operation			
Output Code	**Linear Output**	**Fail High**	**Fail Low**
A	$3.9 \leq I \leq 20.8$	$I \geq 21.75$ mA	$I \leq 3.75$ mA
M	$0.97 \leq V \leq 5.2$	$V \geq 5.4$ V	$V \leq 0.95$V

NAMUR-Compliant Operation			
Output Code	**Linear Output**	**Fail High**	**Fail Low**
A	$3.8 \leq I \leq 20.5$	$I \geq 22.5$ mA	$I \leq 3.6$ mA

Output Code F

If self-diagnostics detect a gross transmitter failure, that information gets passed as a status along with the process variable.

PHYSICAL SPECIFICATIONS

Electrical Connections

1/2–14 NPT, G1/2, and M20 × 1.5 (CM20) conduit.

Process Connections

2051C

- 1/4–18 NPT on 2 1/8-in. centers
- 1/2–14 NPT and RC 1/2 on 2-in.(50.8mm), 2 1/8-in. (54.0 mm), or 2 1/4-in. (57.2mm) centers (process adapters)

2051T

- 1/2–14 NPT female
- G1/2 A DIN 16288 Male (available in SST for Range 1–4 transmitters only)
- Autoclave type F-250-C (Pressure relieved 9/16–18 gland thread; 1/4 OD high pressure tube 60° cone; available in SST for Range 5 transmitters only)

2051L

- High pressure side: 2-in.(50.8mm), 3-in. (72 mm), or 4-in. (102mm), ASME B 16.5 (ANSI) Class 150 or 300 flange;
  50, 80 or 100 mm, DIN 2501 PN 40 or 10/16 flange
- Low pressure side: 1/4–18 NPT on flange, 1/2–14 NPT on process adapter

2051C Process Wetted Parts

Drain/Vent Valves
316 SST or Alloy C-276

Process Flanges and Adapters
Plated carbon steel, SST CF-8M (cast version of 316 SST, material per ASTM-A743), or CW12MW (cast version of Alloy C-276)

Wetted O-rings
Glass-filled PTFE or Graphite-filled PTFE

Process Isolating Diaphragms
316L SST or Alloy C-276

2051T Process Wetted Parts

Process Connections

- 316L SST or Alloy C-276

Process Isolating Diaphragms

- 316L SST or Alloy C-276

2051L Process Wetted Parts

Flanged Process Connection (Transmitter High Side)

Process Diaphragms, Including Process Gasket Surface

- 316L SST or Alloy C-276

Extension

- CF-3M (Cast version of 316L SST, material per ASTM-A743), or Cast C-276. Fits schedule 40 and 80 pipe.

Mounting Flange

- Zinc-cobalt plated CS or SST

Reference Process Connection (Transmitter Low Side)

Isolating Diaphragms

- 316L SST or Alloy C-276

Reference Flange and Adapter

- CF-8M (Cast version of 316 SST, material per ASTM-A743)

Non-Wetted Parts for 2051C/T/L

Electronics Housing
Low-copper aluminum or CF-8M (Cast version of 316 SST). Enclosure Type 4X, IP 65, IP 66, IP68

Coplanar Sensor Module Housing
CF-3M (Cast version of 316L SST)

Bolts
ASTM A449, Type 1 (zinc-cobalt plated carbon steel)
ASTM F593G, Condition CW1 (Austenitic 316 SST)
ASTM A193, Grade B7M (zinc plated alloy steel)

Sensor Module Fill Fluid
Silicone oil (D.C. 200) or Fluorocarbon oil (Halocarbon or Fluorinert® FC-43 for 2051T)

Process Fill Fluid (2051L only)
Syltherm XLT, D.C. Silicone 704,
D.C. Silicone 200, inert, glycerin and water, Neobee M-20 or propylene glycol and water

Paint
Polyurethane

Cover O-rings
Buna-N

Shipping Weights

Table A-4. Transmitter Weights without Options

Transmitter	lb. (kg)
2051C	4.9 (2,2)
2051L	Table A-5 below
2051T	3.1 (1,4)

Table A-5. 2051L Weights without Options

Flange	Flush lb. (kg)	2-in. Ext. lb (kg)	4-in. Ext. lb (kg)	6-in. Ext. lb (kg)
2-in., 150	12.5 (5,7)	—	—	—
3-in., 150	17.5 (7,9)	19.5 (8,8)	20.5 (9,3)	21.5 (9,7)
4-in., 150	23.5 (10,7)	26.5 (12,0)	28.5 (12,9)	30.5 (13,8)
2-in., 300	17.5 (7,9)	—	—	—
3-in., 300	22.5 (10,2)	24.5 (11,1)	25.5 (11,6)	26.5 (12,0)
4-in., 300	32.5 (14,7)	35.5 (16,1)	37.5 (17,0)	39.5 (17,9)
DN 50/PN 40	13.8 (6,2)	—	—	—
DN 80/PN 40	19.5 (8,8)	21.5 (9,7)	22.5 (10,2)	23.5 (10,6)
DN 100/ PN 10/16	17.8 (8,1)	19.8 (9,0)	20.8 (9,5)	21.8 (9,9)
DN 100/ PN 40	23.2 (10,5)	25.2 (11,5)	26.2 (11,9)	27.2 (12,3)

Table A-6. Transmitter Options Weights

Code	Option	Add lb (kg)
J, K, L, M	Stainless Steel Housing	3.9 (1,8)
M5	LCD display for Aluminum Housing	0.5 (0,2)
B4	SST Mounting Bracket for Coplanar Flange	1.0 (0,5)
B1 B2 B3	Mounting Bracket for Traditional Flange	2.3 (1,0)
B7 B8 B9	Mounting Bracket for Traditional Flange	2.3 (1,0)
BA, BC	SST Bracket for Traditional Flange	2.3 (1,0)
H2	Traditional Flange	2.6 (1,2)
H3	Traditional Flange	3.0 (1,4)
H4	Traditional Flange	3.0 (1,4)
H7	Traditional Flange	2.7 (1,2)
FC	Level Flange—3 in., 150	12.7 (5,8)
FD	Level Flange—3 in., 300	15.9 (7,2)
FA	Level Flange—2 in., 150	8.0 (3,6)
FB	Level Flange—2 in., 300	8.4 (3,8)
FP	DIN Level Flange, SST, DN 50, PN 40	7.8 (3,5)
FQ	DIN Level Flange, SST, DN 80, PN 40	12.7 (5,8)

ORDERING INFORMATION

Model	Transmitter Type (Select One)	CD	CG
2051C	Pressure Transmitter	•	•

Model	Measurement Type	CD	CG
D	Differential	•	—
G	Gage	—	•

Code	Pressure Ranges (Range/Min. Span)		CD	CG
	2051CD	**2051CG**		
1	–25 to 25 inH_2O/0.5 inH_2O (–62,2 to 62,2 mbar/1,2 mbar)	–25 to 25 inH_2O/0.5 inH_2O (–62,1 to 62,2 mbar/1,2 mbar)	•	•
2	–250 to 250 inH_2O/2.5 inH_2O (–623 to 623 mbar/6,2 mbar)	–250 to 250 inH_2O/2.5 inH_2O (–623 to 623 mbar/6,2 mbar)	•	•
3	–1000 to 1000 inH_2O/10 inH_2O (–2,5 to 2,5 bar/25 mbar)	–393 to 1000 inH_2O/10 inH_2O (–0,98 to 2,5 bar/25 mbar)	•	•
4	–300 to 300 psi/3 psi (–20,7 to 20,7 bar/0,2 bar)	–14.2 to 300 psi/3 psi (–0,98 to 20,7 bar/0,2 bar)	•	•
5	–2000 to 2000 psi/20 psi (–137,9 to 137,9 bar/1,4 bar)	–14.2 to 2000 psig/20 psi (–0,98 to 137,9 bar/1,4 bar)	•	•

Code	Output	CD	CG
A	4–20 mA with Digital Signal Based on *HART* Protocol	•	•
M	Low-Power, 1–5 V dc with Digital Signal Based on HART Protocol	•	•
F	FOUNDATION fieldbus Protocol	•	•

Code	Materials of Construction			CD	CG
	Process Flange Type	**Flange Material**	**Drain/Vent**		
2	Coplanar	SST	SST	•	•
3(1)	Coplanar	Cast C-276	Alloy C-276	•	•
5	Coplanar	Plated CS	SST	•	•
7(1)	Coplanar	SST	Alloy C-276	•	•
8(1)	Coplanar	Plated CS	Alloy C-276	•	•
0	Alternate Process Connection (Requires selecting Flange, Manifold, or Primary Element option code, see page A-13)			•	•

Code	Isolating Diaphragm	CD	CG
2(1)	316L SST	•	•
3(1)	Alloy C-276	•	•

Code	O-ring		
A	Glass-filled PTFE	•	•
B	Graphite-filled PTFE	•	•

Code	Fill Fluid	CD	CG
1	Silicone	•	•
2	Inert fill (Halocarbon)	•	•

Code	Housing Material	Conduit Entry Size	CD	CG
A	Polyurethane-covered Aluminum	½–14 NPT	•	•
B	Polyurethane-covered Aluminum	M20 × 1.5 (CM20)	•	•
D	Polyurethane-covered Aluminum	G½	•	•
J	SST (consult factory for availability)	½–14 NPT	•	•
K	SST (consult factory for availability)	M20 × 1.5 (CM20)	•	•
M	SST (consult factory for availability)	G½	•	•

Code	Options	CD	CG
Alternate Process Connection: Flange[2]			
H2	Traditional Flange, 316 SST, SST Drain/Vent	•	•
H3[1]	Traditional Flange, Cast C-276, Alloy C-276 Drain/Vent	•	•
H7[1]	Traditional Flange, 316 SST, Alloy C-276 Drain/Vent	•	•
HJ	DIN Compliant Traditional Flange, SST, 7/16 in. Adapter/Manifold Bolting	•	•
HK[3]	DIN Compliant Traditional Flange, SST, 10 mm Adapter/Manifold Bolting	•	•
HL	DIN Compliant Traditional Flange, SST, 12mm Adapter/Manifold Bolting	•	•
FA	Level Flange, SST, 2 in., ANSI Class 150, Vertical Mount	•	•
FB	Level Flange, SST, 2 in., ANSI Class 300, Vertical Mount	•	•
FC	Level Flange, SST, 3 in., ANSI Class 150, Vertical Mount	•	•
FD	Level Flange, SST, 3 in., ANSI Class 300, Vertical Mount	•	•
FP	DIN Level Flange, SST, DN 50, PN 40, Vertical Mount	•	•
FQ	DIN Level Flange, SST, DN 80, PN 40, Vertical Mount	•	•
Alternate Process Connection: Manifold[2][4]			
S5	Assemble to Rosemount 305 Integral Manifold	•	•
S6	Assemble to Rosemount 304 Manifold or Connection System	•	•
Alternate Process Connection: Primary Element[2][4]			
S4[5]	Assemble to Rosemount Primary Element	•	—
S3	Assemble to Rosemount 405 Primary Element	•	—
Diaphragm Seal Assemblies[4]			
S1[6]	Assemble to one Rosemount 1199 diaphragm seal	•	•
S2[7]	Assemble to two Rosemount 1199 diaphragm seals	•	—
Mounting Brackets			
B1[8]	Traditional Flange Bracket for 2-in. Pipe Mounting, CS Bolts	•	•
B2[8]	Traditional Flange Bracket for Panel Mounting, CS Bolts	•	•
B3[8]	Traditional Flange Flat Bracket for 2-in. Pipe Mounting, CS Bolts	•	•
B4[9]	Coplanar Flange Bracket for 2-in. Pipe or Panel Mounting, all SST	•	•
B7[8]	B1 Bracket with Series 300 SST Bolts	•	•
B8[8]	B2 Bracket with Series 300 SST Bolts	•	•
B9[8]	B3 Bracket with Series 300 SST Bolts	•	•
BA[8]	SST B1 Bracket with Series 300 SST Bolts	•	•
BC[8]	SST B3 Bracket with Series 300 SST Bolts	•	•
Product Certifications			
E1[10]	ATEX Flameproof	•	•
E2[10]	INMETRO Flameproof (consult factory for availability)	•	•
E3[10]	China Flameproof (consult factory for availability)	•	•
E4[10]	TIIS Flameproof (consult factory for availability)	•	•
E5	FM Explosion-proof, Dust Ignition-proof	•	•
E6	CSA Explosion-proof, Dust Ignition-proof, Division 2	•	•
E7	IECEx Flameproof	•	•
EP[10]	Korea (KOSHA) Flameproof Approval (consult factory for availability)	•	•
EW[10]	India (CCOE) Flameproof Approval (consult factory for availability)	•	•
EM[10]	GOST Explosion-proof (consult factory for availability)	•	•
I1	ATEX Intrinsic Safety	•	•
I2[10]	INMETRO Intrinsic Safety (consult factory for availability)	•	•
I3[10]	China Intrinsic Safety (consult factory for availability)	•	•
I4[10]	TIIS Intrinsic Safety (consult factory for availability)	•	•
I5	FM Intrinsically Safe, Division 2	•	•
I6	CSA Intrinsically Safe	•	•
I7[10]	IECEx Intrinsic Safety	•	•
IA[11]	ATEX FISCO Intrinsic Safety	•	•
IB[11]	INMETRO FISCO Intrinsic Safety (consult factory for availability)	•	•
ID[11]	TIIS FISCO Intrinsic Safety (consult factory for availability)	•	•
IE[11]	FM FISCO Intrinsically Safe	•	•

IF(11)	CSA FISCO Intrinsically Safe	•	•
IG(11)	IECEx FISCO Intrinsically Safe	•	•
IP(10)	Korea (KOSHA) Instrinsic Safety (consult factory for availability)	•	•
IM(10)	GOST Intrinsically Safe (consult factory for availability)	•	•
IW(10)	India (CCOE) Intrinsic Safety Approval (consult factory for availability)	•	•
K1(10)	ATEX Flameproof, Intrinsic Safety, Type n, Dust	•	•
K2(10)	INMETRO Flameproof, Intrinsic Safety, Type n (consult factory for availability)	•	•
K4(10)	TIIS Flameproof, Intrinsic Safety (consult factory for availability)	•	•
K5	FM Explosion-proof, Dust Ignition-proof, Intrinsically Safe, Division 2	•	•
K6	CSA Explosion-proof, Dust Ignition-proof, Intrinsically Safe, Division 2	•	•
K7(10)	IECEx Flameproof, Intrinsic Safety, Type n	•	•
KA	ATEX and CSA Flameproof, Intrinsically Safe, Division 2	•	•
KB	FM and CSA Explosion-proof, Dust Ignition-proof, Intrinsically Safe, Division 2	•	•
KC	FM and ATEX Explosion-proof, Intrinsically Safe, Division 2	•	•
KD(10)	FM, CSA, and ATEX Explosion-proof, Intrinsically Safe	•	•
N1(10)	ATEX Type n	•	•
N7(10)	IECEx Type n	•	•
ND	ATEX Dust	•	•
Bolting Configurations		•	•
L4	Austenitic 316 SST Bolts	•	•
L5	ASTM A 193, Grade B7M Bolts	•	•
L8	ASTM A 193 Class 2, Grade B8M Bolts	•	•
Digital Display			
M5	LCD display	•	•
Special Configuration (Hardware)			
D4(12)	Zero and Span Hardware Adjustments	•	•
DF(13)	1/2-14 NPT Flange Adapters	•	•
D9(14)	JIS Process Connection-RC 1/4 Flange with RC 1/2 Flange Adapter	•	•
V5(15)	External Ground Screw Assembly	•	•
Performance			
P8(16)	0.065% accuracy and 5 year stability	•	•
Terminal Blocks			
T1	Transient Protection Terminal Block	•	•
Special Configuration (Software)			
C1(17)	Custom Software Configuration (Requires completed Configuration Data Sheet)	•	•
C4(17)(18)	Analog Output Levels Compliant with NAMUR Recommendation NE 43, Alarm High	•	•
CN(17)(18)	Analog Output Levels Compliant with NAMUR Recommendation NE 43 Alarm Low	•	•
Special Procedures			
P1	Hydrostatic Testing with Certificate	•	•
P2(19)	Cleaning for Special Service	•	•
P9	4500 psig (310 bar) static pressure limit (Ranges 2-5 only)	•	•
P3(19)	Cleaning for <1 PPM Chlorine/Fluorine	•	•
Special Certifications			
Q4	Calibration Certificate	•	•
Q8	Material Traceability Certification per EN 10204 3.1.B	•	•
QS(17)	Prior-use certificate of FMEDA data	•	•
Q16(20)	Surface finish certification for sanitary remote seals	•	•
QP	Calibration certification and tamper evident seal	•	•
QZ(20)	Remote Seal System Performance Calculation Report	•	•

Typical Model Number: 2051C D 2 A 2 2 A 1 A B4 M5

(1) Materials of Construction comply with recommendations per NACE MR0175/ISO 15156 for sour oil field production environments. Environmental limits apply to certain materials. Consult latest standard for details. Selected materials also conform to NACE MR0103 for sour refining environments.
(2) Requires 0 code in Materials of Construction for Alternate Process Connection.
(3) Not valid with optional code P9 for 4500psi Static Pressure.
(4) "Assemble-to" items are specified separately and require a completed model number.
(5) Process Flange limited to Coplanar (codes 2, 3, 5, 7, 8) or Traditional (H2, H3, H7).

(6) Not valid with optional code D9 for RC1/2 Adaptors.
(7) Not valid with optional codes DF & D9 for Adaptors.
(8) Requires option in the Alternate Process Connection: Flange section.
(9) Requires Coplanar flange.
(10) Not available with Low Power output code M.
(11) Only valid with FOUNDATION fieldbus output code F.
(12) Not available with FOUNDATION fieldbus output code F.
(13) Not valid with Alternate Process Connection options S3, S4, S5, S6.
(14) Not available with Alternate Process Connection: DIN Flanges and Level Flanges.
(15) The V5 option is not needed with the T1 option; external ground screw assembly is included with the T1 option.
(16) Available for HART 4-20mA output code A. Valid for Ranges 2-5 only.
(17) Only available with HART 4-20mA output (output code A).
(18) NAMUR-Compliant operation is pre-set at the factory and cannot be changed to standard operation in the field.
(19) Not valid with Alternate Process Connections S5 & S6.
(20) Requires one of the Diaphragm Seal Assemblies codes (S1 or S2).

Model	Transmitter Type (Select One)	
2051T	In-Line Pressure Transmitter	
Model	**Measurement Type**	
G	Gage	
A	Absolute	
Code	**Pressure Ranges (Ranges/ Min. Span)**	
	2051TG	**2051TA**
1	–14.7 to 30 psi/0.3 psi (–1,01 to 2,1 bar/20,7 mbar)	0 to 30 psia/0.3 psia (0 to 2,1 bar/20,7 mbar)
2	–14.7 to 150 psi/1.5 psi (–1,01 to 10,3 bar/103,4 mbar)	0 to 150 psia/1.5 psia (0 to 10,3 bar/103,4 mbar)
3	–14.7 to 800 psi/8 psi (–1,01 to 55,2 bar/0,55 bar)	0 to 800 psia/8 psia (0 to 55,2 bar/0,55 bar)
4	–14.7 to 4000 psi/40 psi (–1,01 to 275,8 bar/2,8 bar)	0 to 4000 psia/40 psia (0 to 275,8 bar/2,8 bar)
5	–14.7 to 10000 psi/2000 psi (–1,01 to 689,5 bar/138 bar)	0 to 10000 psia/2000 psia (0 to 689,5 bar/138 bar)
Code	**Output**	
A	4–20 mA with Digital Signal Based on HART Protocol	
M	Low-Power, 1–5 V dc with Digital Signal Based on HART Protocol	
F	FOUNDATION fieldbus Protocol	
Code	**Process Connection Style**	
2B	1/2–14 NPT female	
2C	G1/2 A DIN 16288 male (Range 1-4 only)	
2F	Coned and Threaded, Compatible with Autoclave Type F-250-C (Includes Gland and Collar, Available in SST for Range 5 only)	
Code	**Isolating Diaphragm**	
2(1)	316L SST	
3(1)	Alloy C-276	
Code	**Fill Fluid**	
1	Silicone	
2	Inert fill (Fluorinert FC-43)	
Code	**Housing Material**	**Conduit Entry Size**
A	Polyurethane-covered Aluminum	½–14 NPT
B	Polyurethane-covered Aluminum	M20 × 1.5 (CM20)
D	Polyurethane-covered Aluminum	G½
J	SST (consult factory for availability)	½–14 NPT
K	SST (consult factory for availability)	M20 × 1.5 (CM20)
M	SST (consult factory for availability)	G½
Code	**Options**	
Manifold Assemblies		
S5(2)	Assemble to Rosemount 306 Integral Manifold	
Diaphragm Seal Assemblies		
S1(2)	Assemble to one Rosemount 1199 diaphragm seal	
Mounting Brackets		
B4	Bracket for 2-in. Pipe or Panel Mounting, all SST	
Product Certifications		
E1(3)	ATEX Flameproof	
E2(3)	INMETRO Flameproof (consult factory for availability)	
E3(3)	China Flameproof (consult factory for availability)	
E4(3)	TIIS Flameproof (consult factory for availability)	
E5	FM Explosion-proof, Dust Ignition-proof	
E6	CSA Explosion-proof, Dust Ignition-proof, Division 2	
E7	IECEx Flameproof	
EP(3)	Korea (KOSHA) Flameproof Approval (consult factory for availability)	
EW(3)	India (CCOE) Flameproof Approval (consult factory for availability)	
EM(3)	GOST Explosion-proof (consult factory for availability)	

I1	ATEX Intrinsic Safety
I2[3]	INMETRO Intrinsic Safety (consult factory for availability)
I3[3]	China Intrinsic Safety (consult factory for availability)
I4[3]	TIIS Intrinsic Safety (consult factory for availability)
I5	FM Intrinsically Safe, Division 2
I6	CSA Intrinsically Safe
I7[3]	IECEx Intrinsic Safety
IA[4]	ATEX FISCO Intrinsic Safety
IB[4]	INMETRO FISCO Intrinsic Safety (consult factory for availability)
ID[4]	TIIS FISCO Intrinsic Safety (consult factory for availability)
IE[4]	FM FISCO Intrinsically Safe
IF[4]	CSA FISCO Intrinsically Safe
IG[4]	IECEx FISCO Intrinsically Safe
IP[3]	Korea (KOSHA) Instrinsic Safety (consult factory for availability)
IM[3]	GOST Intrinsically Safe (consult factory for availability)
IW[3]	India (CCOE) Intrinsic Safety Approval (consult factory for availability)
K1[3]	ATEX Flameproof, Intrinsic Safety, Type n, Dust
K2[3]	INMETRO Flameproof, Intrinsic Safety, Type n (consult factory for availability)
K4[3]	TIIS Flameproof, Intrinsic Safety (consult factory for availability)
K5	FM Explosion-proof, Dust Ignition-proof, Intrinsically Safe, Division 2
K6	CSA Explosion-proof, Dust Ignition-proof, Intrinsically Safe, Division 2
K7[3]	IECEx Flameproof, Intrinsic Safety, Type n
KA	ATEX and CSA Flameproof, Intrinsically Safe, Division 2
KB	FM and CSA Explosion-proof, Dust Ignition-proof, Intrinsically Safe, Division 2
KC	FM and ATEX Explosion-proof, Intrinsically Safe, Division 2
KD[3]	FM, CSA, and ATEX Explosion-proof, Intrinsically Safe
N1[3]	ATEX Type n
N7[3]	IECEx Type n
ND	ATEX Dust
Digital Display	
M5	LCD display
Special Configuration (Hardware)	
D4[5]	Zero and Span Hardware Adjustments
V5[6]	External Ground Screw Assembly
Performance	
P8[7]	0.065% accuracy and 5 year stability
Terminal Blocks	
T1	Transient Protection Terminal Block
Special Configuration (Software)	
C1[8]	Custom Software Configuration (Requires completed Configuration Data Sheet)
C4[8][9]	Analog Output Levels Compliant with NAMUR Recommendation NE 43, Alarm High
CN[8][9]	Analog Output Levels Compliant with NAMUR Recommendation NE 43 Alarm Low
Special Procedures	
P1	Hydrostatic Testing with Certificate
P2[10]	Cleaning for Special Service
P3[10]	Cleaning for <1 PPM Chlorine/Fluorine

Special Certifications	
Q4	Calibration Certificate
Q8	Material Traceability Certification per EN 10204 3.1.B
QS(8)	Prior-use certificate of FMEDA data
Q16(11)	Surface finish certification for sanitary remote seals
QP	Calibration certification and tamper evident seal
QZ(11)	Remote Seal System Performance Calculation Report

Typical Model Number: 2051T G 3 A 2B 1 A B4 M5

(1) Materials of Construction comply with recommendations per NACE MR0175/ISO 15156 for sour oil field production environments. Environmental limits apply to certain materials. Consult latest standard for details. Selected materials also conform to NACE MR0103 for sour refining environments.
(2) "Assemble-to" items are specified separately and require a completed model number.
(3) Not available with Low Power output code M.
(4) Only valid with FOUNDATION fieldbus output code F.
(5) Not available with FOUNDATION fieldbus output code F.
(6) The V5 option is not needed with the T1 option; external ground screw assembly is included with the T1 option.
(7) Available for HART 4-20mA output code A. Valid for Ranges 1-4 only.
(8) Only available with HART 4-20mA output (output code A).
(9) NAMUR-Compliant operation is pre-set at the factory and cannot be changed to standard operation in the field.
(10) Not valid with Alternate Process Connection S5.
(11) Requires S1 Diaphragm Seal Assembly code.

Model	Transmitter Type		
2051L	Flange-Mounted Liquid Level Transmitter		
Code	**Pressure Ranges (Range/Minimum Span)**		
2	–250 to 250 inH_2O/2.5 inH_2O (–0,6 to 0,6 bar/6,2 mbar)		
3	–1000 to 1000 inH_2O/10 inH_2O (–2,5 to 2,5 bar/25 mbar)		
4	–300 to 300 psi/3 psi (–20,7 to 20,7 bar/0,2 bar)		
Code	**Output**		
A	4–20 mA with Digital Signal Based on HART Protocol		
M	Low-Power, 1–5 V dc with Digital Signal Based on HART Protocol		
F	FOUNDATION fieldbus Protocol		
Code	**High Pressure Side**		
	Diaphragm Size	**Material**	**Extension Length**
G0	2 in./DN 50	316L SST	Flush Mount Only
H0	2 in./DN 50	Alloy C-276	Flush Mount Only
A0	3 in./DN 80	316L SST	Flush Mount
A2	3 in./DN 80	316L SST	2 in./50 mm
A4	3 in./DN 80	316L SST	4 in./100 mm
A6	3 in./DN 80	316L SST	6 in./150 mm
B0	4 in./DN 100	316L SST	Flush Mount
B2	4 in./DN 100	316L SST	2 in./50 mm
B4	4 in./DN 100	316L SST	4 in./100 mm
B6	4 in./DN 100	316L SST	6 in./150 mm
C0	3 in./DN 80	Alloy C-276	Flush Mount
C2	3 in./DN 80	Alloy C-276	2 in./50 mm
C4	3 in./DN 80	Alloy C-276	4 in./100 mm
C6	3 in./DN 80	Alloy C-276	6 in./150 mm
D0	4 in./DN 100	Alloy C-276	Flush Mount
D2	4 in./DN 100	Alloy C-276	2 in./50 mm
D4	4 in./DN 100	Alloy C-276	4 in./100 mm
D6	4 in./DN 100	Alloy C-276	6 in./150 mm
Code	**Mounting Flange**		
	Size	**Rating**	**Material**
M	2 in.	Class 150, ANSI	CS
A	3 in.	Class 150, ANSI	CS
B	4 in.	Class 150, ANSI	CS
N	2 in.	Class 300, ANSI	CS
C	3 in.	Class 300, ANSI	CS
D	4 in.	Class 300, ANSI	CS
X	2 in.	Class 150, ANSI	SST
F	3 in.	Class 150, ANSI	SST
G	4 in.	Class 150, ANSI	SST
Y	2 in.	Class 300, ANSI	SST
H	3 in.	Class 300, ANSI	SST
J	4 in.	Class 300, ANSI	SST
Q	DN50	PN 10-40, DIN	CS
R	DN80	PN 40, DIN	CS
K	DN50	PN 10-40, DIN	SST
T	DN80	PN 40, DIN	SST

Code	Process Fill-High Pressure Side	Temperature Limits
A	Syltherm® XLT	-100 to 300 °F (-73 to 135 °C)
C	D.C. Silicone 704	60 to 400 °F (15 to 205 °C)
D	D.C. Silicone 200	-40 to 400 °F (-40 to 205 °C)
H	Inert (Halocarbon)	-50 to 350 °F (-45 to 177 °C)
G	Glycerin and Water	0 to 200 °F (-17 to 93 °C)
N	Neobee® M-20	0 to 400 °F (-17 to 205 °C)
P	Propylene Glycol and Water	0 to 200 °F (-17 to 93 °C)

Code	Low Pressure Side			
	Configuration	**Flange Adapter**	**Diaphragm Material**	**Sensor Fill Fluid**
11	Gage	SST	316L SST	Silicone
21	Differential	SST	316L SST	Silicone
22	Differential (SST Valve Seat)	SST	Alloy C-276	Silicone
2A	Differential	SST	316L SST	Inert (Halocarbon)
2B	Differential (SST Valve Seat)	SST	Alloy C-276	Inert (Halocarbon)
31	Remote Seal	SST	316L SST	Silicone

Code	O-ring
A	Glass-filled PTFE

Code	Housing Material	Conduit Entry Size
A	Polyurethane-covered Aluminum	½–14 NPT
B	Polyurethane-covered Aluminum	M20 × 1.5 (CM20)
D	Polyurethane-covered Aluminum	G½
J	SST (consult factory for availability)	½–14 NPT
K	SST (consult factory for availability)	M20 × 1.5 (CM20)
M	SST (consult factory for availability)	G½

Code	Options
Diaphragm Seal Assembly	
S1(1)	Assemble to one Rosemount 1199 diaphragm seal
Product Certifications	
E1(2)	ATEX Flameproof
E2(2)	INMETRO Flameproof (consult factory for availability)
E3(2)	China Flameproof (consult factory for availability)
E4(2)	TIIS Flameproof (consult factory for availability)
E5	FM Explosion-proof, Dust Ignition-proof
E6	CSA Explosion-proof, Dust Ignition-proof, Division 2
E7	IECEx Flameproof
EP(2)	Korea (KOSHA) Flameproof Approval (consult factory for availability)
EW(2)	India (CCOE) Flameproof Approval (consult factory for availability)
EM(2)	GOST Explosion-proof (consult factory for availability)
I1	ATEX Intrinsic Safety
I2(2)	INMETRO Intrinsic Safety (consult factory for availability)
I3(2)	China Intrinsic Safety (consult factory for availability)
I4(2)	TIIS Intrinsic Safety (consult factory for availability)
I5	FM Intrinsically Safe, Division 2
I6	CSA Intrinsically Safe
I7(2)	IECEx Intrinsic Safety
IA(3)	ATEX FISCO Intrinsic Safety
IB(3)	INMETRO FISCO Intrinsic Safety (consult factory for availability)
ID(3)	TIIS FISCO Intrinsic Safety (consult factory for availability)
IE(3)	FM FISCO Intrinsically Safe
IF(3)	CSA FISCO Intrinsically Safe
IG(3)	IECEx FISCO Intrinsically Safe
IP(2)	Korea (KOSHA) Instrinsic Safety (consult factory for availability)
IM(2)	GOST Intrinsically Safe (consult factory for availability)

IW(2)	India (CCOE) Intrinsic Safety Approval (consult factory for availability)
K1(2)	ATEX Flameproof, Intrinsic Safety, Type n, Dust
K2(2)	INMETRO Flameproof, Intrinsic Safety, Type n (consult factory for availability)
K4(2)	TIIS Flameproof, Intrinsic Safety (consult factory for availability)
K5	FM Explosion-proof, Dust Ignition-proof, Intrinsically Safe, Division 2
K6	CSA Explosion-proof, Dust Ignition-proof, Intrinsically Safe, Division 2
K7(2)	IECEx Flameproof, Intrinsic Safety, Type n
KA	ATEX and CSA Flameproof, Intrinsically Safe, Division 2
KB	FM and CSA Explosion-proof, Dust Ignition-proof, Intrinsically Safe, Division 2
KC	FM and ATEX Explosion-proof, Intrinsically Safe, Division 2
KD(2)	FM, CSA, and ATEX Explosion-proof, Intrinsically Safe
N1(2)	ATEX Type n
N7(2)	IECEx Type n
ND	ATEX Dust
Digital Display	
M5	LCD display
Special Configuration (Hardware)	
D4(4)	Zero and Span Hardware Adjustments
DF(5)	1/2-14 NPT Flange Adapters
V5(6)	External Ground Screw Assembly
Terminal Blocks	
T1	Transient Protection Terminal Block
Special Configuration (Software)	
C1(7)	Custom Software Configuration (Requires completed Configuration Data Sheet)
C4(7)(8)	Analog Output Levels Compliant with NAMUR Recommendation NE 43, Alarm High
CN(7)(8)	Analog Output Levels Compliant with NAMUR Recommendation NE 43 Alarm Low
Special Certifications	
Q4	Calibration Certificate
Q8	Material Traceability Certification per EN 10204 3.1.B
QS(7)	Prior-use certificate of FMEDA data
Q16	Surface finish certification for sanitary remote seals
QP	Calibration certification and tamper evident seal
Flushing Connections	
F1	One 1/4-inch Connector, SST Ring Material
F2	Two 1/4-inch Connectors, SST Ring Material
F3(9)	One 1/4-inch Connector, Cast C-276 Ring Material
F4(9)	Two 1/4-inch Connectors, Cast C-276 Ring Material
F7	One 1/2-inch Connector, SST Ring Material
F8	Two 1/2-inch Connectors, SST Ring Material
F9	One 1/2-inch Connector, Cast C-276 Ring Material
F0	Two1/2-inch Connectors, Cast C-276 Ring Material

Typical Model Number: 2051L 2 A 2 2 A 1 A B4

(1) "Assemble-to" items are specified separately and require a completed model number.
(2) Not available with Low Power output code M.
(3) Only valid with FOUNDATION fieldbus output code F.
(4) Not valid with FOUNDATION fieldbus output code F.
(5) Not available with Diaphragm Seal Assembly option S1.
(6) The V5 option is not needed with the T1 option; external ground screw assembly is included with the T1 option.
(7) Only available with HART 4-20mA output (output code A).
(8) NAMUR-Compliant operation is pre-set at the factory and cannot be changed to standard operation in the field.
(9) Not available with Option Codes A0, B0, and G0.

OPTIONS

Standard Configuration

Unless otherwise specified, transmitter is shipped as follows:

Engineering Units 2051C:	inH_2O (Ranges 1-3), psi (Ranges 4-5)
Engineering Units 2051T:	psi (all ranges)
Engineering Units 2051L:	inH_2O
4 mA (1 V dc)(1):	0 (engineering units above)
20 mA (5 V dc)(1):	Upper range limit
Output:	Linear
Flange type:	Specified model code option
Flange material:	Specified model code option
Drain/vent:	Specified model code option
Integral meter:	Installed or none
Alarm(1):	High
Software tag:	(Blank)

(1) Not applicable to fieldbus.

Tagging (3 options available)

- Standard SST hardware tag is permanently affixed on transmitter. Tag character height is 0.125 in. (3,18 mm), 140 characters maximum.
- Tag may be wired to the transmitter nameplate upon request, 85 characters maximum.
- Tag may be stored in transmitter memory (8 characters maximum). Software tag is left blank unless specified.

Commissioning tag (fieldbus only)

A temporary commissioning tag is attached to all transmitters. The tag indicates the device ID and allows an area for writing the location.

Optional Rosemount 304, 305 or 306 Integral Manifolds

Factory assembled to 2051C and 2051T transmitters. Refer to Product Data Sheet (document number 00813-0100-4839 for Rosemount 304 and 00813-0100-4733 for Rosemount 305 and 306) for additional information.

Optional Diaphragm and Sanitary Seals

Refer to Product Data Sheet (document number 00813-0100-4016 or 00813-0201-4016) for additional information.

Output Information

Output range points must be the same unit of measure. Available units of measure include:

inH_2O	inH_2O@4 °C(1)	psi	Pa
inHg	ftH_2O	bar	kPa
mmH_2O	mmH_2O@4 °C(1)	mbar	torr
mmHg	g/cm2	kg/cm2	atm

(1) Not available on low power.

Hardware Adjustments

D4 Local zero and span adjustments

- Alarm and security adjustments ship standard

LCD display

M5 Digital Meter

- 2-Line, 5-Digit LCD for 4-20 mA HART and FOUNDATION fieldbus
- 1-Line, 4-Digit LCD for 1-5 Vdc HART Low Power
- Direct reading of digital data for higher accuracy
- Displays user-defined flow, level, volume, or pressure units
- Displays diagnostic messages for local troubleshooting
- 90-degree rotation capability for easy viewing

Transient Protection

T1 Integral Transient Protection Terminal Block

Meets IEEE C62.41, Category Location B

6 kV crest (0.5 μs - 100 kHz)
3 kV crest (8 × 20 microseconds)
6 kV crest (1.2 × 50 microseconds)

Bolts for Flanges and Adapters

- Standard material is plated carbon steel per ASTM A449, Type 1

L4 Austenitic 316 Stainless Steel Bolts
L5 ASTM A 193, Grade B7M Bolts
L8 ASTM A 193 Class 2, Grade B8M Bolts

Rosemount 2051C Coplanar Flange and 2051T Bracket Option

B4 Bracket for 2-in. Pipe or Panel Mounting

- For use with the standard Coplanar flange configuration
- Bracket for mounting of transmitter on 2-in. pipe or panel
- Stainless steel construction with stainless steel bolts

Rosemount 2051C Traditional Flange Bracket Options

B1 Bracket for 2-in. Pipe Mounting

- For use with the traditional flange option
- Bracket for mounting on 2-in. pipe
- Carbon steel construction with carbon steel bolts
- Coated with polyurethane paint

B2 Bracket for Panel Mounting

- For use with the traditional flange option
- Bracket for mounting transmitter on wall or panel
- Carbon steel construction with carbon steel bolts
- Coated with polyurethane paint

B3 Flat Bracket for 2-in. Pipe Mounting

- For use with the traditional flange option
- Bracket for vertical mounting of transmitter on 2-in. pipe
- Carbon steel construction with carbon steel bolts
- Coated with polyurethane paint

B7 B1 Bracket with SST Bolts

- Same bracket as the B1 option with Series 300 stainless steel bolts

B8 B2 Bracket with SST Bolts

- Same bracket as the B2 option with Series 300 stainless steel bolts

B9 B3 Bracket with SST Bolts

- Same bracket as the B3 option with Series 300 stainless steel bolts

BA Stainless Steel B1 Bracket with SST Bolts

- B1 bracket in stainless steel with Series 300 stainless steel bolts

BC Stainless Steel B3 Bracket with SST Bolts

- B3 bracket in stainless steel with Series 300 stainless steel bolts

SPARE PARTS

Terminal Block, HART	Part Number
4-20 mA HART Output	
Standard terminal block assembly	02051-9005-0001
Transient terminal block assembly (option T1)	02051-9005-0002
1-5 Vdc HART Low Power Output	
Standard terminal block assembly	02051-9005-0011
Transient terminal block assembly (option T1)	02051-9005-0012

Electronics Board, HART	Part Number
Assemblies for 4-20 mA HART	
4-20 mA HART for use without D4 option	02051-9001-0001
4-20 mA HART for use with D4 option	02051-9001-0002
4-20 mA HART NAMUR Compliant for use with or without D4 option	02051-9001-0012
Assembly for 1-5 Vdc HART Low Power	
1-5 Vdc HART	02051-9001-1001

LCD Display, HART	
LCD Display Kit(1)	
4-20 mA with Aluminum Housing	03031-0193-0101
4-20 mA with SST Housing	03031-0193-0111
1-5 Vdc with Aluminum Housing	03031-0193-0001
1-5 Vdc with SST Housing	03031-0193-0011
LCD Displays Only(2)	
For 4-20 mA output	03031-0193-0103
For 1-5 Vdc Low Power output	03031-0193-0003
LCD Display Hardware, both 4-20 mA and 1-5 Vdc Low Power	
Aluminum Display Cover Assembly(3)	03031-0193-0002
SST Display Cover Assembly(3)	03031-0193-0012
O-ring package for electronics housing cover, pkg of 12	03031-0232-0001
Zero and Span Hardware Adjustments (D4 option)	
Zero and Span Kit for 4-20 mA HART(4)	
Zero and Span Kit for Aluminum Housing	02051-9010-0001
Zero and Span Kit for SST Housing	02051-9010-0002
Zero and Span Kit for 4-20 mA HART NAMUR Compliant (C4/CN) option(5)	
Zero and Span Kit for Aluminum Housing	02051-9010-1001
Zero and Span Kit for SST Housing	02051-9010-1002
Zero and Span Kit for 1-5 Vdc HART Low Power(5)	
Zero and Span Kit for Aluminum Housing	02051-9010-1001
Zero and Span Kit for SST Housing	02051-9010-1002

O-Ring Packages (package of 12)	Part Number
Electronic housing, cover (standard and meter)	03031-0232-0001
Electronics housing, module	03031-0233-0001
Process flange, glass-filled PTFE	03031-0234-0001
Process flange, graphite-filled PTFE	03031-0234-0002
Flange adapter, glass-filled PTFE	03031-0242-0001
Flange adapter, graphite-filled PTFE	03031-0242-0002

(1) Kit includes LCD display, captive mounting hardware, 10-pin interconnection header, cover assembly.
(2) Displays include LCD, captive mounting hardware, 10-pin interconnection header. No cover assembly.
(3) Display Cover Assembly includes the cover and o-ring only.
(4) Kit includes zero and span hardware adjustments and electronics board.
(5) Kit includes zero and span hardware adjustments only.

Flanges	Part Number
Differential Coplanar Flange	
Nickel-plated carbon steel	03031-0388-0025
316 SST	03031-0388-0022
Cast C-276	03031-0388-0023
Gage Coplanar Flange	
Nickel-plated carbon steel	03031-0388-1025
316 SST	03031-0388-1022
Cast C-276	03031-0388-1023
Coplanar Flange Alignment Screw (package of 12)	03031-0309-0001
Traditional Flange	
316 SST	03031-0320-0002
Cast C-276	03031-0320-0003
Level Flange, Vertical Mount	
2 in., class 150, SST	03031-0393-0221
2 in., class 300, SST	03031-0393-0222
3 in., class 150, SST	03031-0393-0231
3 in., class 300, SST	03031-0393-0232
DIN, DN 50, PN 40	03031-0393-1002
DIN, DN 80, PN 40	03031-0393-1012

Flange Adapter	Part Number
Nickel-plated carbon steel	02024-0069-0005
316 SST	02024-0069-0002
Cast C-276	02024-0069-0003

Drain/Vent Valve Kits (each kit contains parts for one transmitter)	Part Number
Differential Drain/Vent Kits	
316 SST stem and seat kit	01151-0028-0022
Alloy C-276 stem and seat kit	01151-0028-0023
316 SST ceramic ball drain/vent kit	03031-0378-0022
Alloy C-276ceramic ball drain/vent kit	01151-0028-0123
Gage Drain/Vent Kits	
316 SST stem and seat kit	01151-0028-0012
Alloy C-276 stem and seat kit	01151-0028-0013
316 SST ceramic ball drain/vent kit	03031-0378-0012
Alloy C-276 ceramic ball drain/vent kit	01151-0028-0113

Mounting Brackets	
2051C and 2051L Coplanar Flange Bracket Kit	
B4 bracket, SST, 2-in. pipe mount, SST bolts	03031-0189-0003
2051T Bracket Kit	
B4 bracket, SST, 2-in. pipe mount, SST bolts	03031-0189-0004
2051C Traditional Flange Bracket Kits	
B1 bracket, 2-in. pipe mount, CS bolts	03031-0313-0001
B2 bracket, panel mount, CS bolts	03031-0313-0002
B3 flat bracket for 2-in. pipe mount, CS bolts	03031-0313-0003
B7 (B1 style bracket with SST bolts)	03031-0313-0007
B8 (B2 style bracket with SST bolts)	03031-0313-0008
B9 (B3 style bracket with SST bolts)	03031-0313-0009
BA (SST B1 bracket with SST bolts)	03031-0313-0011
BC (SST B3 bracket with SST bolts)	03031-0313-0013

Bolt Kits	
COPLANAR FLANGE	
Flange Bolt Kit {44 mm (1.75 in.)} (Set of 4)	
Carbon steel	03031-0312-0001
316 SST	03031-0312-0002
ASTM A 193, Grade B7M	03031-0312-0003
ASTM A 193, Class 2, Grade B8M	03031-0312-0005
Flange/Adapter Bolt Kit {73 mm (2.88 in.)} (Set of 4)	
Carbon steel	03031-0306-0001
316 SST	03031-0306-0002
ASTM A 193, Grade B7M	03031-0306-0003
ASTM A 193, Class 2, Grade B8M	03031-0306-0005
Manifold/Flange Kit {57 mm (2.25 in.)} (Set of 4)	
Carbon steel	03031-0311-0001
316 SST	03031-0311-0002
ASTM A 193, Grade B7M	03031-0311-0003
ASTM A 193, Class 2, Grade B8M	03031-0311-0020
TRADITIONAL FLANGE	
Differential Flange and Adapter Bolt Kit {44 mm (1.75 in.)} (Set of 8)	
Carbon steel	03031-0307-0001
316 SST	03031-0307-0002
ASTM A 193, Grade B7M	03031-0307-0003
ASTM A 193, Class 2, Grade B8M	03031-0307-0005
Gage Flange and Adapter Bolt Kit (Set of 6)	
Carbon steel	03031-0307-1001
316 SST	03031-0307-1002
ASTM A 193, Grade B7M	03031-0307-1003
ASTM A 193, Class 2, Grade B8M	03031-0307-1005
Manifold/Traditional Flange Bolts	
Carbon steel	Use bolts supplied with manifold
316 SST	Use bolts supplied with manifold
LEVEL FLANGE, VERTICAL MOUNT	
Flange Bolt Kit (Set of 4)	
Carbon steel	03031-0395-0001
316 SST	03031-0395-0002
Covers	
Aluminum field terminal cover + o-ring	03031-0292-0001(1)
SST field terminal cover + o-ring	03031-0292-0002(1)
Aluminum HART electronics cover: cover + o-ring	03031-0292-0001(1)
316 SST HART electronics cover: cover + o-ring	03031-0292-0002(1)
Aluminum Electronics / LCD Display Cover Assembly: cover + o-ring	03031-0193-0002
SST Electronics / LCD Display Cover Assembly: cover + o-ring	03031-0193-0012
Miscellaneous	
External ground screw assembly (option V5)	03031-0398-0001

(1) Covers are blind, not for use with LCD Display. Refer to LCD Display section for LCD covers.

Appendix B Approval Information

Overview . . . . . .page B-1
Safety Messages . . . . . .page B-1
Approval Drawings . . . . . .page B-7

OVERVIEW

This Appendix contains information on Approved manufacturing locations, European directive information, Ordinary Location certification, Hazardous Locations Certifications and approval drawings for HART protocol.

SAFETY MESSAGES

Procedures and instructions in this section may require special precautions to ensure the safety of the personnel performing the operations. Information that raises potential safety issues is indicated by a warning symbol (⚠). Refer to the following safety messages before performing an operation preceded by this symbol.

Warnings

⚠WARNING

Explosions could result in death or serious injury:

Installation of this transmitter in an explosive environment must be in accordance with the appropriate local, national, and international standards, codes, and practices. Please review this section of the Rosemount 2051 reference manual for any restrictions associated with a safe installation.

- Before connecting a HART-based communicator in an explosive atmosphere, make sure the instruments in the loop are installed in accordance with intrinsically safe or non-incendive field wiring practices.
- In an Explosion-Proof/Flameproof installation, do not remove the transmitter covers when power is applied to the unit.

Process leaks may cause harm or result in death.

- Install and tighten process connectors before applying pressure.

Electrical shock can result in death or serious injury.

- Avoid contact with the leads and terminals. High voltage that may be present on leads can cause electrical shock.

⚠WARNING

Cable gland and plug must comply with the requirements listed on the certificates.

Approved Manufacturing Locations

Rosemount Inc. — Chanhassen, Minnesota USA
Emerson Process Management GmbH & Co. — Wessling, Germany
Emerson Process Management Asia Pacific Private Limited — Singapore
Beijing Rosemount Far East Instrument Co., LTD — Beijing, China

European Directive Information

The EC declaration of conformity for all applicable European directives for this product can be found on the Rosemount website at www.rosemount.com. A hard copy may be obtained by contacting an Emerson Process Management representative.

ATEX Directive (94/9/EC)
All 2051 transmitters comply with the ATEX Directive.

European Pressure Equipment Directive (PED) (97/23/EC)
2051CG2, 3, 4, 5; 2051CD2, 3, 4, 5 (also with P9 option)
— QS Certificate of Assessment - EC No. PED-H-100
Module H Conformity Assessment

All other 2051 Pressure Transmitters
— Sound Engineering Practice

Transmitter Attachments: Diaphragm Seal - Process Flange - Manifold
— Sound Engineering Practice

Electro Magnetic Compatibility (EMC) (2004/108/EC)
All 2051 Pressure Transmitters meet all of the requirements of IECEN61326:2006 and NAMUR NE-21.

Ordinary Location Certification for Factory Mutual
As standard, the transmitter has been examined and tested to determine that the design meets basic electrical, mechanical, and fire protection requirements by FM, a nationally recognized testing laboratory (NRTL) as accredited by the Federal Occupational Safety and Health Administration (OSHA).

HART Protocol

Hazardous Locations Certifications

North American Certifications

FM Approvals

E5 Explosion-Proof for Class I, Division 1, Groups B, C, and D.
Dust-Ignition-Proof for Class II, Division 1, Groups E, F, and G.
Dust-Ignition-Proof for Class III, Division 1.
T5 (Ta = 85 °C), Factory Sealed, Enclosure Type 4X

I5 Intrinsically Safe for use in Class I, Division 1, Groups A, B, C, and D; Class II, Division 1, Groups E, F, and G; Class III, Division 1 when connected per Rosemount drawing 02051-1009; Non-incendive for Class I, Division 2, Groups A, B, C, and D.
Temperature Code:T4 (Ta = 40 °C), T3 (Ta = 85 °C),
Enclosure Type 4X
For input parameters see control drawing 02051-1009.

Canadian Standards Association (CSA)

E6 Explosion-Proof for Class I, Division 1, Groups B, C, and D.
Dust-Ignition-Proof for Class II and Class III, Division 1, Groups E, F, and G. Suitable for Class I, Division 2 Groups A, B, C, and D for indoor and outdoor hazardous locations. Enclosure type 4X, factory sealed

I6 Intrinsically safe approval. Intrinsically safe for Class I, Division 1, Groups A, B, C, and D when connected in accordance with Rosemount drawing 02051-1008. Temperature Code T3C.
Dust-Ignition-Proof for Class II and Class III, Division 1, Groups E, F, and G. Suitable for Class I, Division 2 Groups A, B, C, and D hazardous locations. Enclosure type 4X, factory sealed
For input parameters see control drawing 02051-1008.

European Certifications

I1 ATEX Intrinsic Safety
Certification No. Baseefa08ATEX0129X Ⓔx II 1 G
Ex ia IIC T4 (–60 ≤ T_a ≤ +70 °C)
IP66 IP68
CE 1180

Table B-1. Input Parameters

U_i = 30V
I_i = 200 mA
P_i = 1.0W
C_i = 0.012 µF

Special Conditions for Safe Use (X):
When the optional transient protection terminal block is installed, the apparatus is not capable of withstanding the 500V insulation test required by Clause 6.3.12 of EN60079-11. This must be taken into account when installing the apparatus.

N1 ATEX Type n
Certification No. Baseefa08ATEX0130X Ⓔx II 3 G
Ex nAnL IIC T4 (–40 ≤ T_a ≤ +70 °C)
U_i = 42.4 Vdc max
IP66 IP68
CE

Special Conditions for Safe Use (X):
When the optional transient protection terminal block is installed, the apparatus is not capable of withstanding a 500V r.m.s. test to case. This must be taken into account on any installation in which it is used, for example by assuring that the supply to the apparatus is galvanically isolated.

E1 ATEX Flame-Proof
Certification No. KEMA 08ATEX0090X G Ⓔx II 1/2 G
Ex d IIC T6 (–50 ≤ T_a ≤ 65 °C)
Ex d IIC T5 (–50 ≤ T_a ≤ 80 °C)
IP66 IP68
CE 1180
Vmax = 42.4 V dc

Special Conditions for Safe Use (X):

1.Appropriate ex d blanking plugs, cable glands, and wiring needs to be suitable for a temperature of 90 °C.

2.This device contains a thin wall diaphragm. Installation, maintenance and use shall take into account the environmental conditions to which the diaphragm will be subjected. The manufacturer's instructions for maintenance shall be followed in detail to assure safety during its expected lifetime.

3.The 2051 does not comply with the requirements of IEC 60079-1 Clause 5 for flameproof joints. Contact Emerson Process Management for information on the dimensions of flameproof joints.

ND ATEX Dust
Certification No. Baseefa08ATEX0182X Ⓔx II 1 D
Dust Rating: T80 °C (–20 ≤ T_a ≤ 40 °C) IP66 IP68
Vmax = 42.4 V dc
A = 22 mA
CE 1180

Special Conditions for Safe Use (X):

1. The user must ensure that the maximum rated voltage and current (42.4 volts, 22 milliampere, DC) are not exceeded. All connections to other apparatus or associated apparatus shall have control over this voltage and current equivalent to a category "ib" circuit according to EN 60079-1.
2. Cable entries must be used which maintain the ingress protection of the enclosure to at least IP66.
3. Unused cable entries must be filled with suitable blanking plugs which maintain the ingress protection of the enclosure to at least IP66.
4. Cable entries and blanking plugs must be suitable for the ambient range of the apparatus and capable of withstanding a 7J impact test.

IECEx Certifications

I7 IECEx Intrinsic Safety
Certification No. IECExBAS08.0045X Ⓔx II 1 GD
Ex ia IIC T4 (–60 ≤ T_a ≤ +70 °C)
Dust Rating: T80 °C (–20 ≤ T_a ≤ 40 °C) IP66 IP68
CE 1180

Table B-1. Input Parameters

U_i = 30V
I_i = 200 mA
P_i = 1.0W
C_i = 0.012 µF

Special Conditions for Safe Use (X):
When the optional transient protection terminal block is installed, the apparatus is not capable of withstanding the 500V insulation test required by Clause 6.3.12 of IEC60079-11. This must be taken into account when installing the apparatus.

E7 IECEx Explosion-Proof (Flame-Proof)
Certification No. IECEx KEM 08.0020X Ⓔx II 1/2 G
Ex d IIC T6 (–50 ≤ T_a ≤ 65 °C)
Ex d IIC T5 (–50 ≤ T_a ≤ 80 °C)
CE 1180
Vmax = 42.4 V dc

Special Conditions for Safe Use (X):

1.Appropriate ex d blanking plugs, cable glands, and wiring needs to be suitable for a temperature of 90 °C.

2.This device contains a thin wall diaphragm. Installation, maintenance and use shall take into account the environmental conditions to which the diaphragm will be subjected. The manufacturer's instructions for maintenance shall be followed in detail to assure safety during its expected lifetime.

3.The 2051 does not comply with the requirements of IEC 60079-1 Clause 5 for flameproof joints. Contact Emerson Process Management for information on the dimensions of flameproof joints.

N7 IECEx Type n
Certification No. IECExBAS08.0046X Ⓔx II 3 G
Ex nAnL IIC T4 (–40 ≤ T_a ≤ +70 °C)
U_i = 42.4 Vdc max
CE

Special Conditions for Safe Use (X):

When the optional transient protection terminal block is installed, the apparatus is not capable of withstanding a 500V r.m.s. test to case. This must be taken into account on any installation in which it is used, for example by assuring that the supply to the apparatus is galvanically isolated.

TIIS Certifications
(consult factory for availability)

E4 TIIS Flame-Proof
Ex d IIC T6

I4 TIIS Intrinsic Safety
Ex ia IIC T4

INMETRO Certifications
(consult factory for availability)

E2 Flame-Proof
BR-Ex d IIC T6/T5

I2 Intrinsic Safety
BR-Ex ia IIC T4

GOST Certifications
(consult factory for availability)

IM Intrinsic Safety
Certificate Pending

EM Flame-Proof
Certificate Pending

China (NEPSI) Certifications
(consult factory for availability)

E3 Flame-Proof
Ex d II B+H_2T3~T5

I3 Intrinsic Safety
Ex ia IIC T3/T4

KOSHA Certifications
(consult factory for availability)

EP Flame-Proof
Ex d IIB+H2 T5

IP Intrinsic Safety
Ex ia IIC T3

CCoE Certifications
(consult factory for availability)

IW Intrinsic Safety
Ex ia IIC T4

EW Flame-Proof
Ex d IIC T5 or T6

Combinations of Certifications

Stainless steel certification tag is provided when optional approval is specified. Once a device labeled with multiple approval types is installed, it should not be reinstalled using any other approval types. Permanently mark the approval label to distinguish it from unused approval types.

K1 **E1, I1, N1,** and **ND** combination

K2 **E2** and **I2** combination (consult factory for availability)

K4 **E4** and **I4** combination (consult factory for availability)

K5 **E5** and **I5** combination

K6 **I6** and **E6** combination

K7 **E7, I7,** and **N7** combination

KA **E1, I1, E6,** and **I6** combination

KB **E5, I5, E6,** and **I6** combination

KC **E1, I1, E5,** and **I5** combination

KD **E1, I1, E5, I5, E6,** and **I6** combination

APPROVAL DRAWINGS

Factory Mutual (FM)

CONFIDENTIAL AND PROPRIETARY INFORMATION IS CONTAINED HEREIN AND MUST BE HANDLED ACCORDINGLY

REVISIONS

REV	DESCRIPTION	CHG. NO.	APP'D	DATE
AA	NEW RELEASE	RTC1025889	J.G.K.	4/21/08

ENTITY APPROVALS FOR
2051C
2051L
2051T

OUTPUT CODE A (4-20 mA HART) I.S. SEE SHEETS 2-5
OUTPUT CODE M (LOW POWER) I.S. SEE SHEETS 6-7
OUTPUT CODE F/W (FIELDBUS) I.S. SEE SHEETS 8-12
ALL OUTPUT CODES NONINCENDIVE SEE SHEET 13

THE ROSEMOUNT TRANSMITTERS LISTED ABOVE ARE F.M. APPROVED AS INTRINSICALLY SAFE WHEN USED IN CIRCUIT WITH F.M. APPROVED BARRIERS WHICH MEET THE ENTITY PARAMETERS LISTED IN THE CLASS I, II, AND III, DIVISION 1 GROUPS INDICATED, TEMP CODE T4. ADDITIONALLY, THE ROSEMOUNT 751 FIELD SIGNAL INDICATOR IS F.M. APPROVED AS INTRINSICALLY SAFE WHEN CONNECTED IN CIRCUIT WITH ROSEMOUNT TRANSMITTERS (FROM ABOVE) AND F.M. APPROVED BARRIERS WHICH MEET THE ENTITY PARAMETERS LISTED FOR CLASS I, II, AND III, DIVISION 1, GROUPS INDICATED, TEMP CODE T4.

TO ASSURE AN INTRINSICALLY SAFE SYSTEM, THE TRANSMITTER AND BARRIER MUST BE WIRED IN ACCORDANCE WITH THE BARRIER MANUFACTURER'S FIELD WIRING INSTRUCTIONS AND THE APPLICABLE CIRCUIT DIAGRAM.

CAD MAINTAINED (MicroStation)

UNLESS OTHERWISE SPECIFIED DIMENSIONS IN INCHES [mm]. REMOVE ALL BURRS AND SHARP EDGES. MACHINE SURFACE FINISH 125

-TOLERANCE-
.X ± .1 [2,5]
.XX ± .02 [0,5]
.XXX ± .010 [0,25]
FRACTIONS ± 1/32
ANGLES ± 2°

DO NOT SCALE PRINT

CONTRACT NO.
DR. Myles Lee Miller 4/16/08
CHK'D
APP'D.
APP'D. GOVT.

EMERSON. Process Management
ROSEMOUNT®
8200 Market Boulevard • Chanhassen, MN 55317 USA

TITLE INDEX OF I.S. & NONINCENDIVE F.M. FOR 2051C/L/T

SIZE A | FSCM NO | DWG NO. 02051-1009
SCALE N/A | WT. ——— | SHEET 1 OF 13

Form Rev AC

REVISIONS				
REV	DESCRIPTION	CHG. NO.	APP'D	DATE
AA				

BARRIER PARAMETERS (APPLICABLE TO OUTPUT CODES A & M)

Pmax = 1WATT

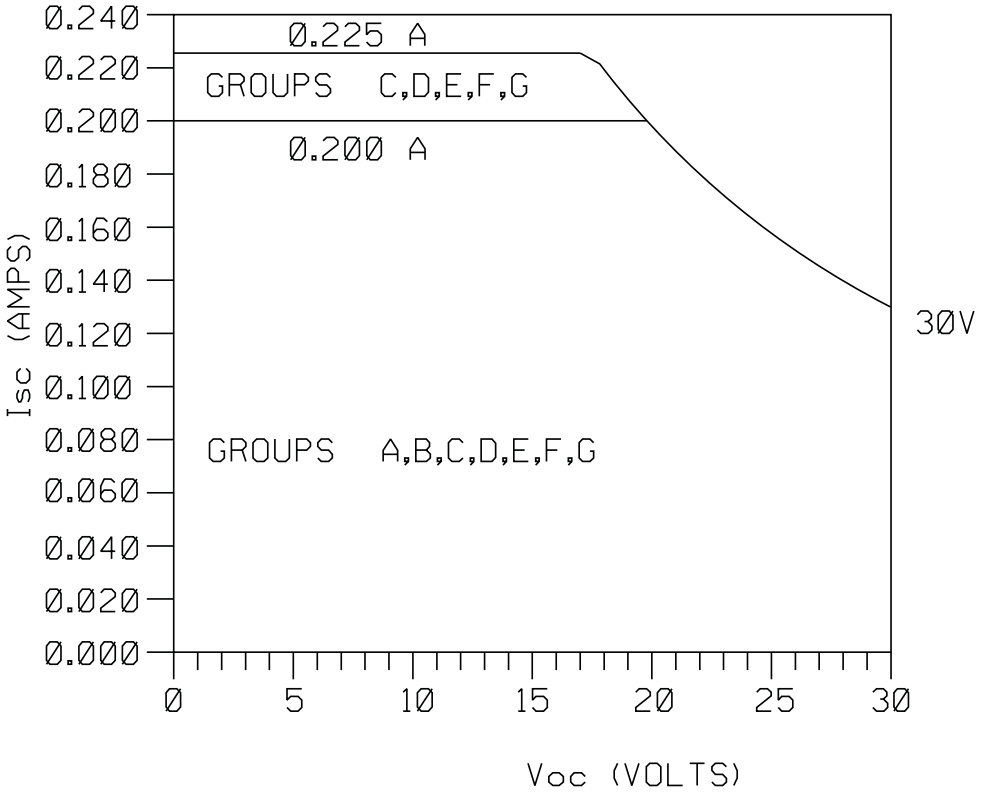

Rosemount Inc. 8200 Market Boulevard Chanhassen, MN 55317 USA			CAD MAINTAINED (MicroStation)	
DR. Myles Lee Miller	SIZE A	FSCM NO	DWG NO. 02051-1009	
ISSUED	SCALE N/A	WT. ———	SHEET 2 OF 13	

Form Rev AC

REVISIONS				
REV	DESCRIPTION	CHG. NO.	APP'D	DATE
AA				

CIRCUIT DIAGRAM 1
ONE BARRIER OR CONVERTER:
SINGLE OR DUAL CHANNEL

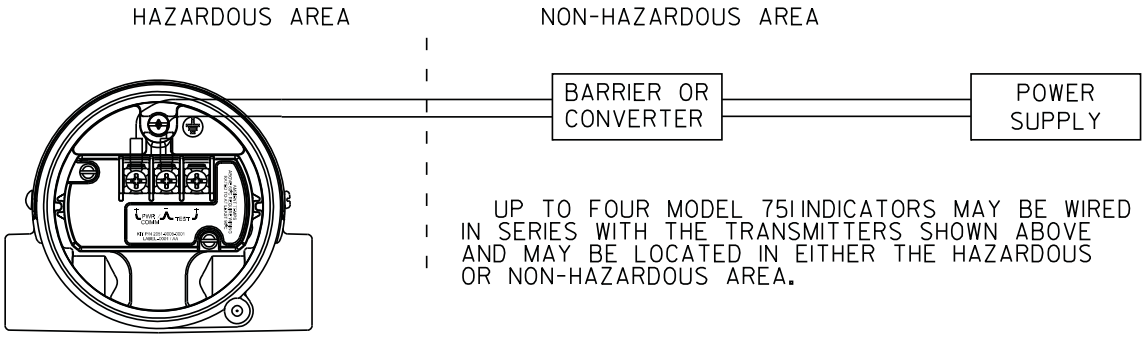

UP TO FOUR MODEL 751 INDICATORS MAY BE WIRED IN SERIES WITH THE TRANSMITTERS SHOWN ABOVE AND MAY BE LOCATED IN EITHER THE HAZARDOUS OR NON-HAZARDOUS AREA.

OUTPUT CODE A
MODELS INCLUDED
205IC, L, T

CIRCUIT DIAGRAM 2
SUPPLY AND RETURN BARRIERS
(ONLY FOR USE WITH BARRIERS APPROVED IN THIS CONFIGURATION)

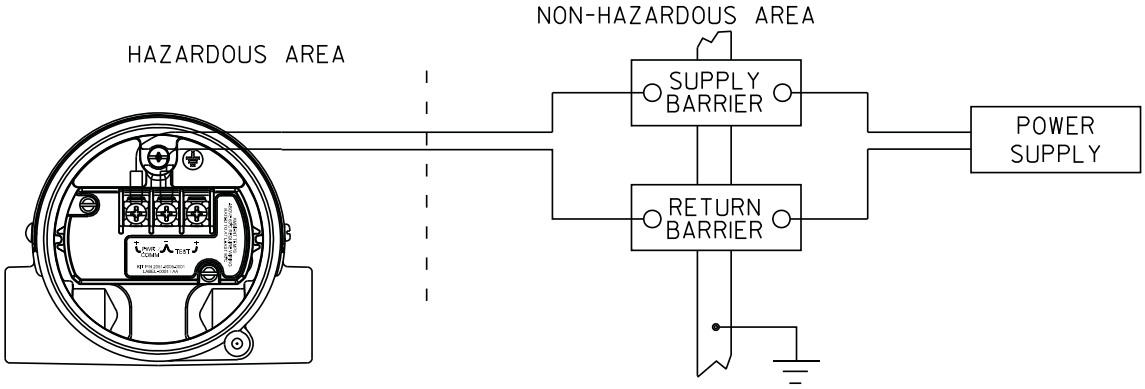

OUTPUT CODE A
MODELS INCLUDED
205IC, L, T

UP TO FOUR MODEL 751 INDICATORS MAY BE WIRED IN SERIES WITH THE TRANSMITTERS SHOWN ABOVE AND MAY BE LOCATED IN EITHER THE HAZARDOUS OR NON-HAZARDOUS AREA.

Rosemount Inc.
8200 Market Boulevard
Chanhassen, MN 55317 USA

CAD MAINTAINED (MicroStation)

DR. Myles Lee Miller	SIZE A	FSCM NO	DWG NO. 02051-1009	
ISSUED	SCALE N/A	WT. ———	SHEET 3 OF 13	

Form Rev AC

REVISIONS				
REV	DESCRIPTION	CHG. NO.	APP'D	DATE
AA				

ENTITY CONCEPT APPROVALS

THE ENTITY CONCEPT ALLOWS INTERCONNECTION OF INTRINSICALLY SAFE APPARATUS TO ASSOCIATED APPARATUS NOT SPECIFICALLY EXAMINED IN COMBINATION AS A SYSTEM. THE APPROVED VALUES OF MAX. OPEN CIRCUIT VOLTAGE (Voc OR Vt) AND MAX. SHORT CIRCUIT CURRENT (Isc OR It) AND MAX. POWER (Voc X Isc/4) OR (Vt X It/4), FOR THE ASSOCIATED APPARATUS MUST BE LESS THAN OR EQUAL TO THE MAXIMUM SAFE INPUT VOLTAGE (Vmax), MAXIMUM SAFE INPUT CURRENT (Imax), AND MAXIMUM SAFE INPUT POWER (Pmax) OF THE INTRINSICALLY SAFE APPARATUS. IN ADDITION, THE APPROVED MAX. ALLOWABLE CONNECTED CAPACITANCE (Ca) OF THE ASSOCIATED APPARATUS MUST BE GREATER THAN THE SUM OF THE INTERCONNECTING CABLE CAPACITANCE AND THE UNPROTECTED INTERNAL CAPACITANCE (C_1) OF THE INTRINSICALLY SAFE APPARATUS, AND THE APPROVED MAX. ALLOWABLE CONNECTED INDUCTANCE (La) OF THE ASSOCIATED APPARATUS MUST BE GREATER THAN THE SUM OF THE INTERCONNECTING CABLE INDUCTANCE AND THE UNPROTECTED INTERNAL INDUCTANCE (L_1) OF THE INTRINSICALLY SAFE APPARATUS.

FOR OUTPUT CODE A

NOTE: ENTITY PARAMETERS LISTED APPLY ONLY TO ASSOCIATED APPARATUS WITH LINEAR OUTPUT.

CLASS I, DIV. 1, GROUPS A AND B

V_T = 30V	V_T OR V_{OC} IS LESS THAN OR EQUAL TO 30V
I_T = 200mA	I_T OR I_{SC} IS LESS THAN OR EQUAL TO 200mA
P_{MAX} = 1 WATT	$(\frac{V_T \times I_T}{4})$ OR $(\frac{V_{OC} \times I_{SC}}{4})$ IS LESS THAN OR EQUAL TO 1 WATT
C_I = .01μf	C_A IS GREATER THAN .01μf
L_I =10μH	L_A IS GREATER THAN 10μH

CLASS I, DIV. 1, GROUPS C AND D

V_T = 30V	V_T OR V_{OC} IS LESS THAN OR EQUAL TO 30V
I_T = 225mA	I_T OR I_{SC} IS LESS THAN OR EQUAL TO 225mA
P_{MAX} = 1 WATT	$(\frac{V_T \times I_T}{4})$ OR $(\frac{V_{OC} \times I_{SC}}{4})$ IS LESS THAN OR EQUAL TO 1 WATT
C_I = .01μf	C_A IS GREATER THAN .01μf
L_I =10μH	L_A IS GREATER THAN 10μH

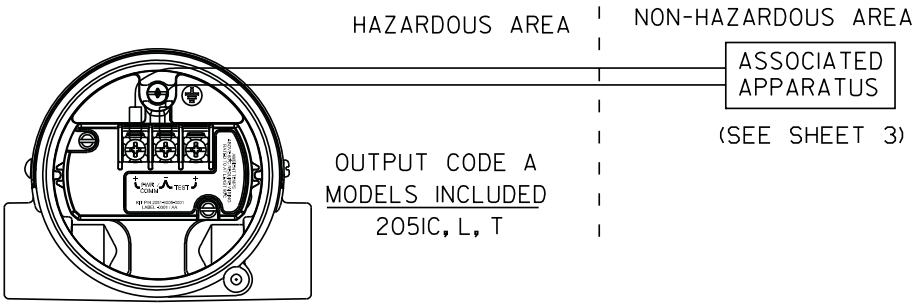

Rosemount Inc.
8200 Market Boulevard
Chanhassen, MN 55317 USA

CAD MAINTAINED (MicroStation)

DR. Myles Lee Miller	SIZE A	FSCM NO	DWG NO. 02051-1009
ISSUED	SCALE N/A	WT. ———	SHEET 4 OF 13

Form Rev AC

REVISIONS				
REV	DESCRIPTION	CHG. NO.	APP'D	DATE
AA				

FOR OUTPUT CODE M

CLASS I, DIV. 1, GROUPS A AND B

V_{MAX} = 30V	V_T OR V_{OC} IS LESS THAN OR EQUAL TO 30V
I_{MAX} = 200mA	I_T OR I_{SC} IS LESS THAN OR EQUAL TO 200mA
P_{MAX} = 1 WATT	$(\frac{V_T \times I_T}{4})$ OR $(\frac{V_{OC} \times I_{SC}}{4})$ IS LESS THAN OR EQUAL TO 1 WATT
C_I = .02μf	C_A IS GREATER THAN .02μf
L_I =10μH	L_A IS GREATER THAN 10μH

* FOR T1 OPTION:

L_I =0.75mH	L_A IS GREATER THAN 0.75mH

CLASS I, DIV. 1, GROUPS C AND D

V_{MAX} = 30V	V_T OR V_{OC} IS LESS THAN OR EQUAL TO 30V
I_{MAX} = 225mA	I_T OR I_{SC} IS LESS THAN OR EQUAL TO 225mA
P_{MAX} = 1 WATT	$(\frac{V_T \times I_T}{4})$ OR $(\frac{V_{OC} \times I_{SC}}{4})$ IS LESS THAN OR EQUAL TO 1 WATT
C_I = .02μf	C_A IS GREATER THAN .02μf
L_I =10μH	L_A IS GREATER THAN 10μH

* FOR T1 OPTION:

L_I =0.75mH	L_A IS GREATER THAN 0.75mH

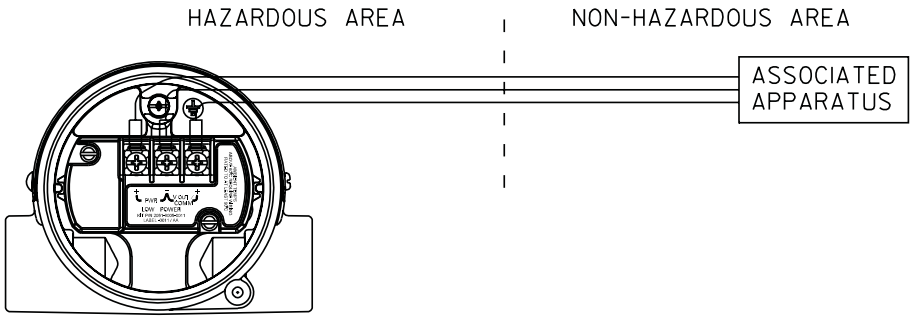

OUTPUT CODE M
AVAILABLE FOR THE MODELS LISTED

205IC 205IT
205IL

Rosemount Inc.
8200 Market Boulevard
Chanhassen, MN 55317 USA

CAD MAINTAINED (MicroStation)

DR. Myles Lee Miller	SIZE A	FSCM NO	DWG NO. 02051-1009
ISSUED	SCALE N/A	WT. ———	SHEET 5 OF 13

Form Rev AC

REVISIONS				
REV	DESCRIPTION	CHG. NO.	APP'D	DATE
AA				

CIRCUIT DIAGRAM 3
ONE DUAL CHANNEL BARRIER

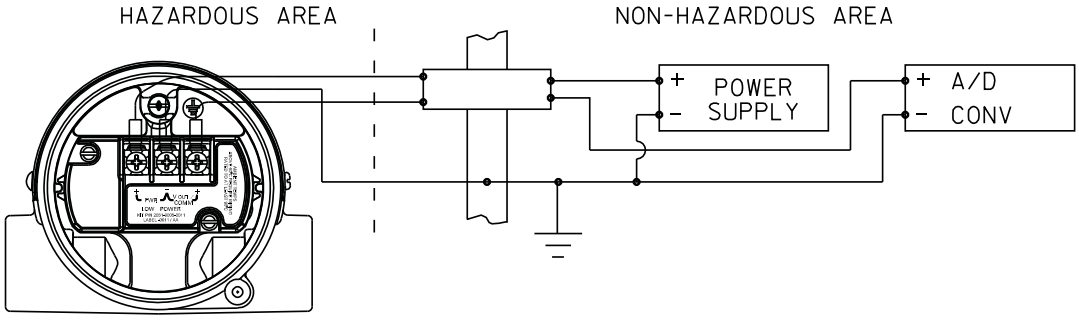

OUTPUT CODE M
AVAILABLE FOR THE MODELS LISTED

205IC 205IT
205IL

CIRCUIT DIAGRAM 4
TWO SINGLE CHANNEL BARRIERS
(ONLY FOR USE WITH BARRIERS APPROVED
IN THIS CONFIGURATION)

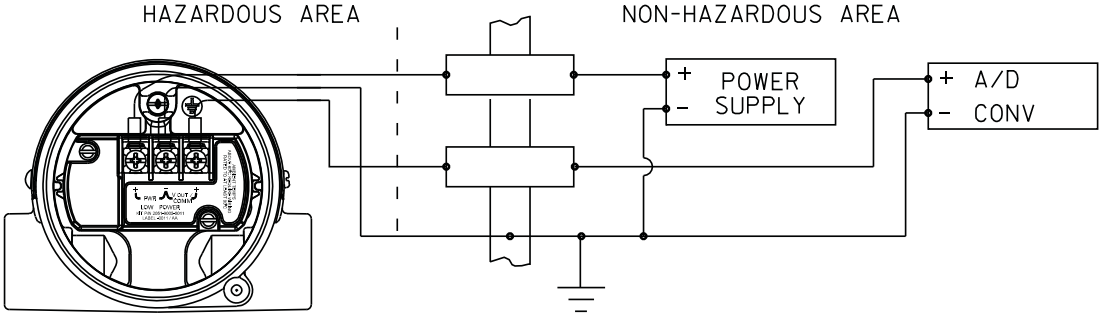

OUTPUT CODE M
AVAILABLE FOR THE MODELS LISTED

205IC 205IT
205IL

Rosemount Inc.
8200 Market Boulevard
Chanhassen, MN 55317 USA

CAD MAINTAINED (MicroStation)

DR. Myles Lee Miller	SIZE A	FSCM NO	DWG NO. 02051-1009	
ISSUED	SCALE N/A	WT. ———	SHEET 6 OF 13	

Form Rev AC

REVISIONS				
REV	DESCRIPTION	CHG. NO.	APP'D	DATE
AA				

2051 WITH FOUNDATION FIELDBUS OR PROFIBUS.
(OUTPUT CODE F OR W)

BARRIER PARAMETERS (APPLICABLE TO OUTPUT CODE F OR W)
Pmax = 1.3 WATT

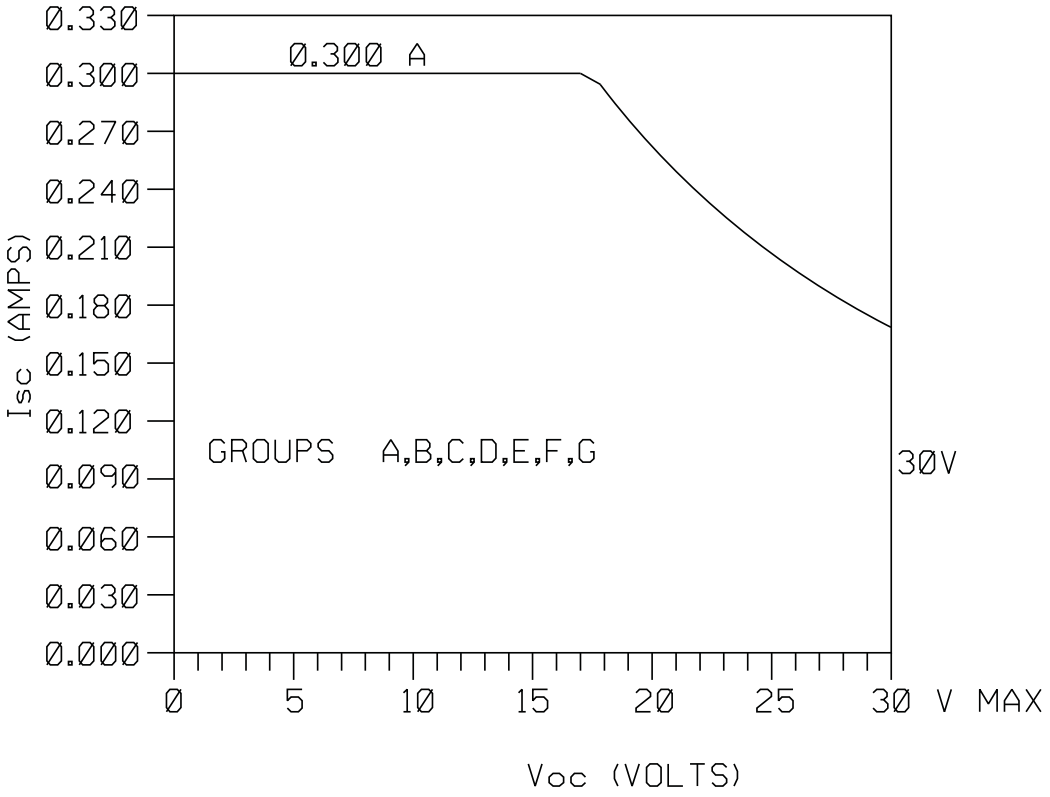

Rosemount Inc.
8200 Market Boulevard
Chanhassen, MN 55317 USA

CAD MAINTAINED (MicroStation)

DR. Myles Lee Miller	SIZE A	FSCM NO	DWG NO. 02051-1009	
ISSUED	SCALE N/A	WT. ———	SHEET 7 OF 13	

Form Rev AC

REVISIONS				
REV	DESCRIPTION	CHG. NO.	APP'D	DATE
AA				

CIRCUIT DIAGRAM 1
ONE BARRIER OR CONVERTER:
SINGLE OR DUAL CHANNEL

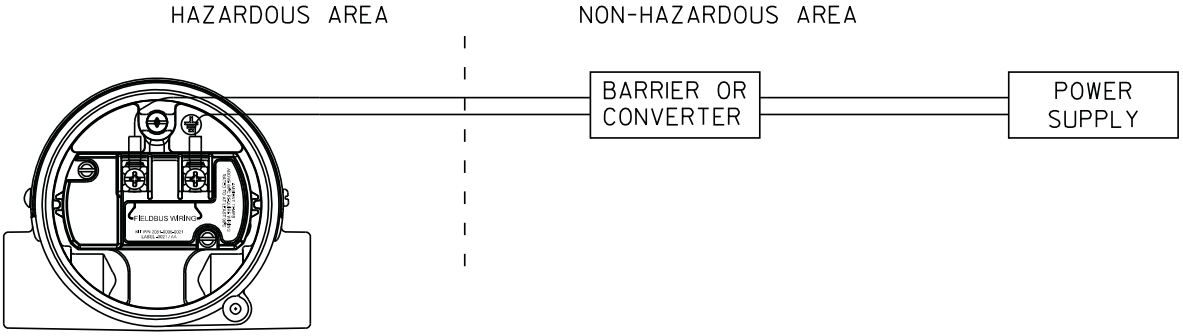

OUTPUT CODE F or W
MODELS INCLUDED
205IC, L, T

CIRCUIT DIAGRAM 2
SUPPLY AND RETURN BARRIERS
(ONLY FOR USE WITH BARRIERS APPROVED IN THIS CONFIGURATION)

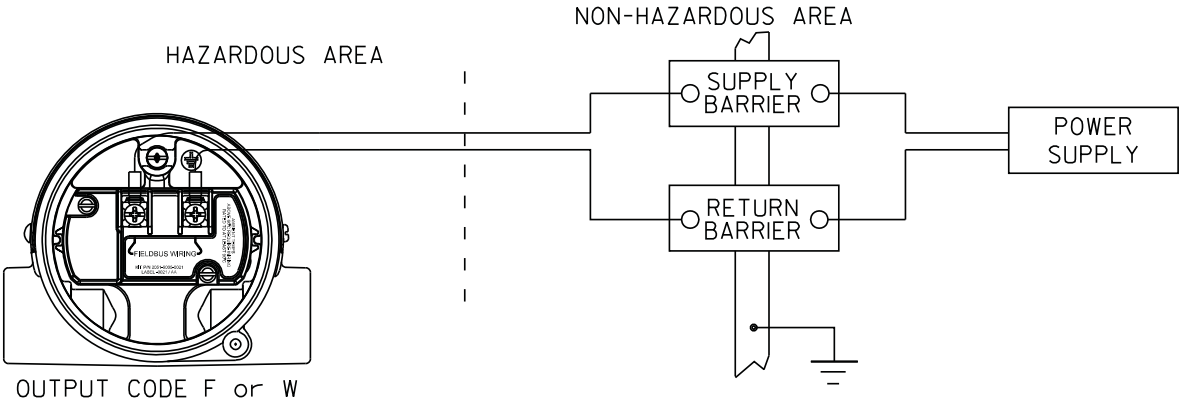

OUTPUT CODE F or W
MODELS INCLUDED
205IC, L, T

Rosemount Inc.
8200 Market Boulevard
Chanhassen, MN 55317 USA

CAD MAINTAINED (MicroStation)

DR. Myles Lee Miller	SIZE A	FSCM NO	DWG NO. 02051-1009	
ISSUED	SCALE N/A	WT. ———		SHEET 8 OF 13

Form Rev AC

REVISIONS				
REV	DESCRIPTION	CHG. NO.	APP'D	DATE
AA				

ENTITY CONCEPT APPROVALS

THE ENTITY CONCEPT ALLOWS INTERCONNECTION OF INTRINSICALLY SAFE APPARATUS TO ASSOCIATED APPARATUS NOT SPECIFICALLY EXAMINED IN COMBINATION AS A SYSTEM. THE APPROVED VALUES OF MAX. OPEN CIRCUIT VOLTAGE (Voc OR Vt) AND MAX. SHORT CIRCUIT CURRENT (Isc OR It) AND MAX. POWER (Voc X Isc/4) OR (Vt X It/4), FOR THE ASSOCIATED APPARATUS MUST BE LESS THAN OR EQUAL TO THE MAXIMUM SAFE INPUT VOLTAGE (Vmax), MAXIMUM SAFE INPUT CURRENT (Imax), AND MAXIMUM SAFE INPUT POWER (Pmax) OF THE INTRINSICALLY SAFE APPARATUS. IN ADDITION, THE APPROVED MAX. ALLOWABLE CONNECTED CAPACITANCE (Ca) OF THE ASSOCIATED APPARATUS MUST BE GREATER THAN THE SUM OF THE INTERCONNECTING CABLE CAPACITANCE AND THE UNPROTECTED INTERNAL CAPACITANCE (C_1) OF THE INTRINSICALLY SAFE APPARATUS, AND THE APPROVED MAX. ALLOWABLE CONNECTED INDUCTANCE (La) OF THE ASSOCIATED APPARATUS MUST BE GREATER THAN THE SUM OF THE INTERCONNECTING CABLE INDUCTANCE AND THE UNPROTECTED INTERNAL INDUCTANCE (L_1) OF THE INTRINSICALLY SAFE APPARATUS.

NOTE: ENTITY PARAMETERS LISTED APPLY ONLY TO ASSOCIATED APPARATUS WITH LINEAR OUTPUT.

FOR OUTPUT CODE F or W

CLASS I, DIV. 1, GROUPS A, B, C AND D

V_{MAX} = 30V	V_T OR V_{OC} IS LESS THAN OR EQUAL TO 30V
I_{MAX} = 300mA	I_T OR I_{SC} IS LESS THAN OR EQUAL TO 300mA
P_{MAX} = 1.3 WATT	$(\frac{V_T \times I_T}{4})$ OR $(\frac{V_{OC} \times I_{SC}}{4})$ IS LESS THAN OR EQUAL TO 1.3 WATT
C_I = 0μf	C_A IS GREATER THAN 0μf
L_I = 0μH	L_A IS GREATER THAN 0μH

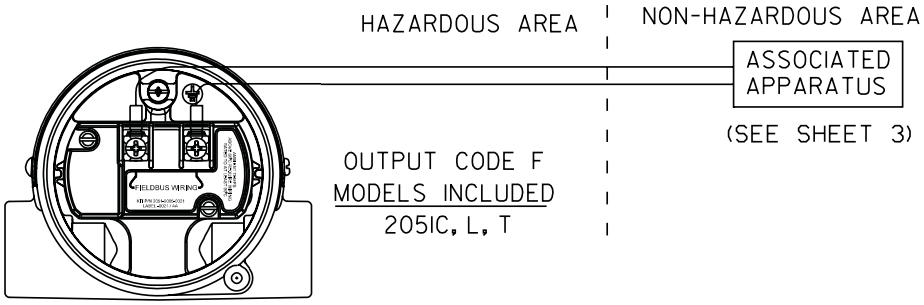

Rosemount Inc.
8200 Market Boulevard
Chanhassen, MN 55317 USA

CAD MAINTAINED (MicroStation)

DR. Myles Lee Miller	SIZE A	FSCM NO	DWG NO. 02051-1009
ISSUED	SCALE N/A	WT. ———	SHEET 9 OF 13

Form Rev AC

REVISIONS				
REV	DESCRIPTION	CHG. NO.	APP'D	DATE
AA				

FISCO CONCEPT APPROVALS

THE FISCO CONCEPT ALLOWS INTERCONNECTION OF INTRINSICALY SAFE APPARATUS TO ASSOCIATED APPARATUS NOT SPECIALLY EXAMINED IN SUCH COMBINATION. FOR THIS INTERCONNECTION TO BE VALID THE VOLTAGE (U_1 or Vmax), THE CURRENT (I_1 or Imax), AND THE POWER (P_1 or Pma) THAT INTRINSICALLY SAVE APPARATUS CAN RECEIVE AND REMAIN INTRINSICALY SAFE, INCLUDING FAULTS, MUST BE EQUAL OR GREATER THAN THE VOLTAGE (Uo, Voc, or Vt), THE CURRENT (Io, Isc, or It), AND THE POWER (Po or Pmax) LEVELS WHICH CAN BE DELIVERED BY THE ASSOCIATED APPARATUS, CONSIDERING FAULTS AND APPLICABLE FACTORS. ALSO, THE MAXIMUM UNPROTECTED CAPACITANCE (C_1) AND THE INDUCTANCE (L_1) OF EACH APPARATUS (BESIDES THE TERMINATION) CONNECTED TO THE FIELDBUS MUST BE LESS THAN OR EQUAL TO 5nF AND 10μH RESPECTVELY.
ONLY ONE ACTIVE DEVICE IN EACH SECTION (USUALLY THE ASSOCIATED APPARATUS) IS ALLOWED TO CONTRIBUTE THE DESIRED ENERGY FOR THE FIELDBUS SYSTEM. THE ASSOCIATED APPARATUS' VOLTAGE Uo (or Voc or Vt) IS LIMITED TO A RANGE OF 14V TO 24 V.D.C. ALL OTHER EQUIPENT COMBINED IN THE BUS CABLE MUST BE PASSIVE (THEY CANNOT PROVIDE ENERGY TO THE SYSTEM, EXCEPT A LEAKAGE CURRENT OF 50 μA FOR EACH CONNECTED DEVICE) SEPARATELY POWERED EQUIPMENT REQUIRES A GALVANIC ISOLATION TO AFFIRM THAT THE INTRINSICALLY SAFE FIELDBUS CIRCUIT WILL REMAIN PASSIVE. THE PARAMETER OF THE CABLE USED TO INTERCONNECT THE DEVICES MUST BE IN THE FOLLOWING RANGE:

LOOP RESISTANCE R': 15...150 OHM/km
INDUCTANCE PER UNIT LENGTH L': 0.4...1mH/KM
CAPACITANCE PER UNLIT LENGTH C': 80...200nF

C' = C' LINE/LINE +0.5C' LINE/SCREEN, IF BOTH LINES ARE FLOATING, OR
C' = C' LINE/LINE +C' LINE/SCREEN, IF THE SCREEN IS CONNECTED TO ONE LINE
TRUNK CABLE LENGTH: ≤1000 m
SPUR CABLE LENGTH: ≤30 m
SPLICE LENGTH: ≤1 m

AN APPROVED INFALLIBLE LINE TERMINATION TO EACH END OF THE TRUNK CABLE, WITH THE FOLLOWING PARAMETERS IS APPROPRIATE:

R = 90...100 OHMS C = 2.2μF

AN ALLOWED TERMINATION MIGHT ALREADY BE LINKED IN THE ASSOCIATED APPARATUS. DUE TO I.S. REASONS, THE NUMBER OF PASSIVE APPARATUS CONNECTED TO THE BUS SEGMENT IS NOT LIMITED. IF THE RULES ABOVE ARE FOLLOWED, UP TO A TOTAL LENGTH OF 1000 m (THE SUMMATION OF TRUNK AND ALL SPUR CABLES), THE INDUCTANCE AND THE CAPACITANCE OF THE CABLE WILL NOT DAMAGE THE INTRINSIC SAFETY OF THE SYSTEM.

NOTES:
INTRINSICALLY SAFE CLASS I, DIV. 1, GROUPS A, B, C, D

1. THE MAXIMUM NON-HAZARDOUS AREA VOLTAGE MUST NOT EXCEED 250 V.
2. CAUTION: ONLY USE SUPPLY WIRES SUITABLE FOR 5°C ABOVE SURROUNDING TEMPERATURE.
3. WARNING: REPLACEMENT OF COMPONENTS MAY DAMAGE INTRINSIC SAFETY.

Rosemount Inc.
8200 Market Boulevard
Chanhassen, MN 55317 USA

CAD MAINTAINED (MicroStation)

DR. Myles Lee Miller	SIZE A	FSCM NO	DWG NO. 02051-1009	
ISSUED	SCALE N/A	WT. ———		SHEET 10 OF 13

Form Rev AC

REVISIONS				
REV	DESCRIPTION	CHG. NO.	APP'D	DATE
AA				

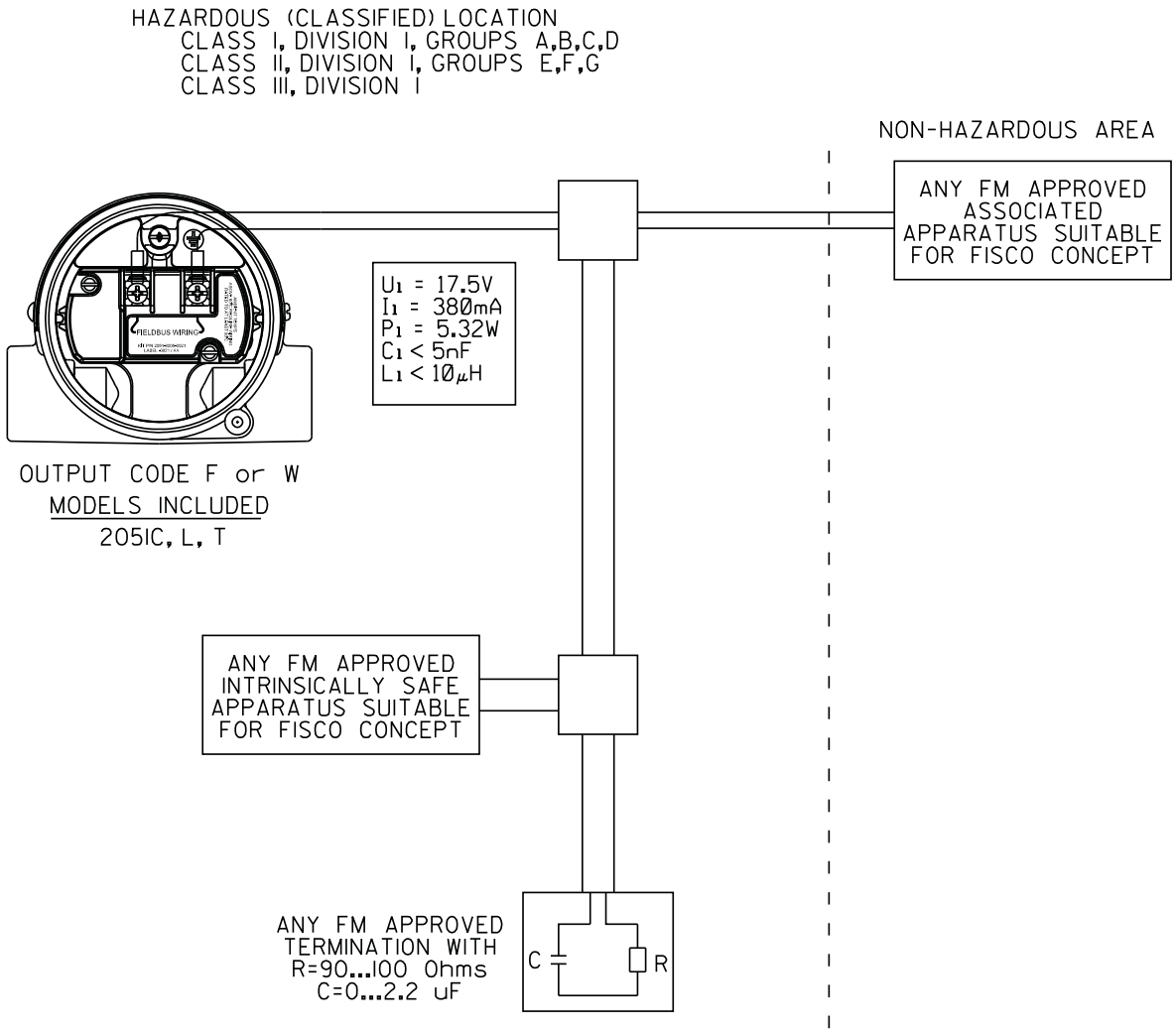

Rosemount Inc.
8200 Market Boulevard
Chanhassen, MN 55317 USA

CAD MAINTAINED (MicroStation)

DR. Myles Lee Miller	SIZE A	FSCM NO	DWG NO. 02051-1009	
ISSUED	SCALE N/A	WT. ———	SHEET 11 OF 13	

Form Rev AC

REVISIONS				
REV	DESCRIPTION	CHG. NO.	APP'D	DATE
AA				

NONINCENDIVE FIELD CIRCUIT
CLASS I, DIV. 2 LOCATIONS

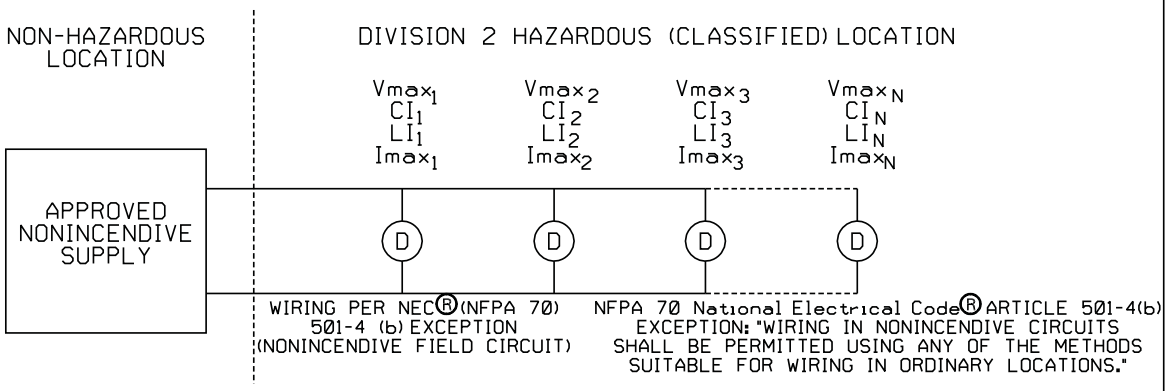

IN NORMAL OPERATION

DEVICES CONTROL THROUGH-CURRENT

PARAMETERS DEVICE

Voc <= Minimum of ($Vmax_1$, $Vmax_2$, ..., $Vmax_N$)

$Imax_1$ >= Iq_1 + $Isignal_1$

$Imax_2$ >= Iq_1 + $Isignal_2$

.

.

.

$Imax_N$ >= Iq_N + $Isignal_N$

Ca <= Ci_1 + Ci_2 +... + Ci_N + Ccable

La <= Li_1 + Li_2 +... + Li_N + Lcable

Imax for an individual device = Iq + Isignal

Iq =Quiescent current through device (Maximum quiescent current for the device)

Isignal =Signaling current through device (Protocol may limit signaling to one device at a time)

Operating Imax = Iq_1 + Iq_2 +...+ Iq_N + I_{signal} max

I_{signal} max = Max. of ($Isignal_1$, $Isignal_2$ ....., $Isignal_N$)

ROSEMOUNT 2051

	4-20mA/ HART	1-5 VDC/ HART	FIELDBUS (F or W)
Vmax	30v	30v	30v
Maximum normal operating current	22mA	3.1mA	27mA
Ca	.010uF	.020uF	0uF
La	10uH	10uH	0uH
La w/T1		.75mH	

ROSEMOUNT 2051 TRANSMITTERS ARE CURRENT CONTROLLERS ON INDIVIDUAL PARALLEL BRANCHES WITH RESPECT TO THE POWER SUPPLY. IN NONINCENDIVE INSTALLATIONS THE Imax FOR EACH TRANSMITTER IS NOT RELATED TO THE MAXIMUM CURRENT OF THE POWER SUPPLY (Isc) IN THE SAME MANNER AS FOR TRANSMITTER INSTALLED PER I.S. REQUIREMENTS, BECAUSE NONINCENDIVE REQUIREMENTS INCLUDE ONLY NORMAL OPERATING CONDITIONS.

REFERENCE: APPENDIX A7.3 (FM3611)

Rosemount Inc.
8200 Market Boulevard
Chanhassen, MN 55317 USA

CAD MAINTAINED (MicroStation)

DR. Myles Lee Miller	SIZE A	FSCM NO	DWG NO. 02051-1009
ISSUED	SCALE N/A	WT. ———	SHEET 12 OF 13

Form Rev AC

REVISIONS				
REV	DESCRIPTION	CHG. NO.	APP'D	DATE
AA				

NOTES:

1. NO REVISION TO THIS DRAWING WITHOUT PRIOR FM APPROVAL.
2. ASSOCIATED APPARATUS MANUFACTURER'S INSTALLATION DRAWING MUST BE FOLLOWED WHEN INSTALLING THIS EQUIPMENT.
3. DUST-TIGHT CONDUIT SEAL MUST BE USED WHEN INSTALLED IN CLASS II AND CLASS III ENVIRONMENTS.
4. CONTROL EQUIPMENT CONNECTED TO ASSOCIATED APPARATUS MUST NOT USE OR GENERATE MORE THAN 250 Vrms or Vdc.
5. RESISTANCE BETWEEN INTRINSICALLY SAFE GROUND AND EARTH GROUND MUST BE LESS THAN 1.0 OHM.
6. INSTALLATION SHOULD BE IN ACCORDANCE WITH ANSI/ISA-RP12.06.01 "INSTALLATION OF INTRINSICALLY SAFE SYSTEMS FOR HAZARDOUS (CLASSIFIED) LOCATIONS" AND THE NATIONAL ELECTRICAL CODE (ANSI/NFPA 70).
7. THE ASSOCIATED APPARATUS MUST BE FM APPROVED.
8. WARNING - SUBSTITUTION OF COMPONENTS MAY IMPAIR INTRINSIC SAFETY.
9. THE ENTITY CONCEPT ALLOWS INTERCONNECTION OF INTRINSICALLY SAFE APPARATUS WITH ASSOCIATED APPARATUS WHEN THE FOLLOWING IS TRUE:
   Vmax or U_1 IS GREATER THAN or EQUAL TO Voc, Vt or Uo
   Imax or I_1 IS GRETER THAN or EQUAL TO Isc, It or Io
   Pmax or P_1 IS GRETER THAN or EQUAL TO Po
   Ca IS GREATER THAN or EQUAL TO THE SUM OF ALL C_1's PLUS Ccable
   La IS GREATER THAN or EQUAL TO THE SUM OF ALL L_1's PLUS Lcable
10. WARNING - TO PREVENT IGNITION OF FLAMMABLE OR COMBUSTIBLE ATMOSPHERES, DISCONNECT POWER BEFORE SERVICING.
11. THE ASSOCIATED APPARATUS MUST BE A RESISTIVELY LIMITED SINGLE OR MULTIPLE CHANNEL FM APPROVED BARRIER HAVEING PARAMETERS LESS THAN THOSE QUOTED, AND FOR WHICH THE OUTPUT AND THE COMBINATIONS OF OUTPUTS IS NON-IGNITION CAPABLE FOR THE CLASS, DIVISION AND GROUP OF USE.

Rosemount Inc.
8200 Market Boulevard
Chanhassen, MN 55317 USA

CAD MAINTAINED (MicroStation)

DR. Myles Lee Miller	SIZE A	FSCM NO	DWG NO. 02051-1009
ISSUED	SCALE N/A	WT. ———	SHEET 13 OF 13

Form Rev AC

Canadian Standards Association (CSA)

CONFIDENTIAL AND PROPRIETARY INFORMATION IS CONTAINED HEREIN AND MUST BE HANDLED ACCORDINGLY

REVISIONS

REV	DESCRIPTION	CHG. NO.	APP'D	DATE
AA	NEW RELEASE	RTC1025889	J.G.K.	4/21/08
AB	UPDATE PER CSA REQUIREMENT	RTC1026355	J.G.K.	6/18/08

APPROVALS FOR

2051C
2051L
2051T

OUTPUT CODE A (4-20 mA HART) I.S. SEE SHEETS 2-3
OUTPUT CODE M (LOW POWER) I.S. SEE SHEETS 3-4
OUTPUT CODE F/W (FIELDBUS) I.S. SEE SHEETS 5-7
OUTPUT CODES A,F,W I.S. ENTITY PARAMETERS SHEET 8-9

TO ASSURE AN INTRINSICALLY SAFE SYSTEM, THE TRANSMITTER AND BARRIER MUST BE WIRED IN ACCORDANCE WITH THE BARRIER MANUFACTURER'S FIELD WIRING INSTRUCTIONS AND THE APPLICABLE CIRCUIT DIAGRAM.

WARNING - EXPLOSION HAZARD - SUBSTITUTION OF COMPONENTS MAY IMPAIR SUITABILITY FOR CLASS I, DIVISION I.

AVERTISSEMENT - RISQUE D'EXPLOSION - LA SUBSTITUTION DE COMPOSANTS PEUT RENDRE CE MATERIEL INACCEPTABLE POUR LES EMPLACEMENTS DE CLASSE I, DIVISION I.

CAD MAINTAINED (MicroStation)

UNLESS OTHERWISE SPECIFIED DIMENSIONS IN INCHES [mm]. REMOVE ALL BURRS AND SHARP EDGES. MACHINE SURFACE FINISH 125

-TOLERANCE-
.X ± .1 [2,5]
.XX ± .02 [0,5]
.XXX ± .010 [0,25]
FRACTIONS ± 1/32
ANGLES ± 2°

DO NOT SCALE PRINT

CONTRACT NO.
DR. Myles Lee Miller 4/15/08
CHK'D
APP'D.
APP'D. GOVT.

EMERSON. Process Management
ROSEMOUNT®
8200 Market Boulevard • Chanhassen, MN 55317 USA

TITLE INDEX OF I.S. CSA FOR 2051C/L/T

SIZE A | FSCM NO | DWG NO. 02051-1008
SCALE N/A | WT. ——— | SHEET 1 OF 9

Form Rev AC

REVISIONS				
REV	DESCRIPTION	CHG. NO.	APP'D	DATE
AB				

CSA INTRINSIC SAFETY APPROVALS
CIRCUIT CONNECTION WITH BARRIER OR CONVERTER
Ex ia
INTRINSICALLY SAFE/SECURITE INTRINSEQUE
4-20 mA, ("A" OUTPUT CODE)

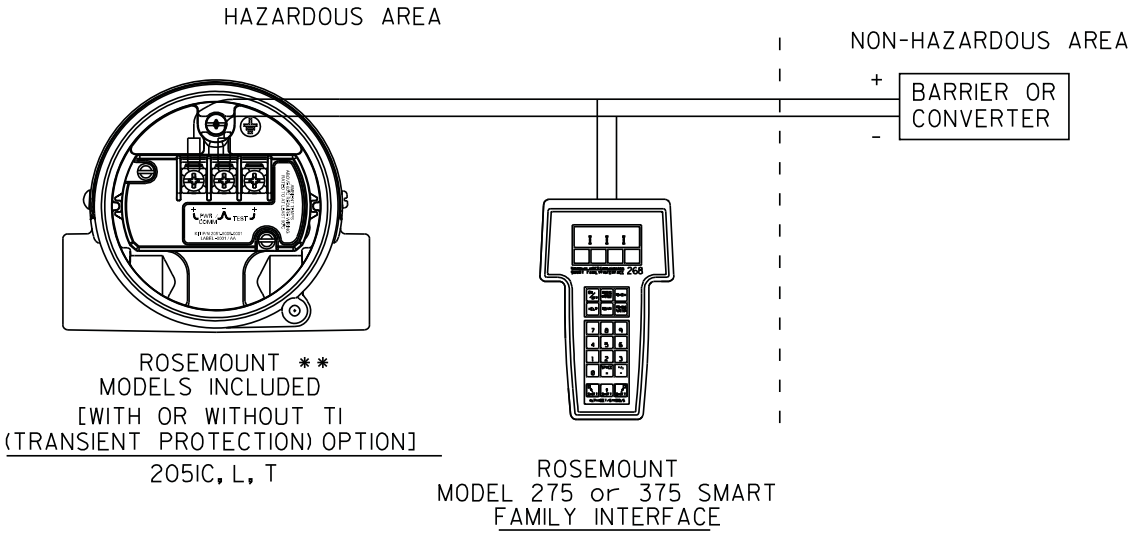

** FOR THE LOW POWER OPTION, SEE PAGE 4 FOR THE CIRCUIT CONNECTION WITH BARRIER OR CONVERTER. FOR FIELDBUS OPTIONS("F" or "W" OUTPUT CODE), SEE PAGE 5 FOR PARAMETERS AND CIRCIUT CONNECTION TO BARRIER.

Rosemount Inc.
8200 Market Boulevard
Chanhassen, MN 55317 USA

CAD MAINTAINED (MicroStation)

DR. Myles Lee Miller 4/15/08	SIZE A	FSCM NO	DWG NO. 02051-1008
ISSUED	SCALE N/A	WT. ———	SHEET 2 OF 9

Form Rev AC

REVISIONS				
REV	DESCRIPTION	CHG. NO.	APP'D	DATE
AB				

4-20 mA, ("A" OUTPUT CODE)

DEVICE	PARAMETERS	APPROVED FOR CLASS I, DIV.I
CSA APPROVED SAFETY BARRIER	30 V OR LESS * 330 OHMS OR MORE * 28 V OR LESS 300 OHMS OR MORE 25 V OR LESS 200 OHMS OR MORE * 22 V OR LESS 180 OHMS OR MORE	GROUPS A, B, C, D
FOXBORO CONVERTER 2AI-12V-CGB, 2AI-13V-CGB, 2AS-131-CGB, 3A2-12D-CGB, 3A2-13D-CGB, 3AD-131-CGB, 3A4-12D-CGB, 2AS-121-CGB, 3F4-12DA		GROUPS B, C, D
CSA APPROVED SAFETY BARRIER	30 V OR LESS 150 OHMS OR MORE	GROUPS C, D

LOW POWER, ("M" OUTPUT CODE)

DEVICE	PARAMETERS	APPROVED FOR CLASS I, DIV.I
CSA APPROVED SAFETY BARRIER	Supply ≤ 28V, ≥ 300 Ω Return ≤ 10V, ≥ 47 Ω	GROUPS A, B, C, D
	Supply ≤ 30V, ≥ 150 Ω Return ≤ 10V, ≥ 47 Ω	GROUPS C, D

* MAY BE USED WITH ROSEMOUNT MODEL 275 or 375
SMART FAMILY INTERFACE.

Rosemount Inc.
8200 Market Boulevard
Chanhassen, MN 55317 USA

CAD MAINTAINED (MicroStation)

DR. Myles Lee Miller	SIZE A	FSCM NO	DWG NO. 02051-1008	
ISSUED	SCALE N/A	WT. ———	SHEET 3 OF 9	

Form Rev AC

REVISIONS				
REV	DESCRIPTION	CHG. NO.	APP'D	DATE
AB				

CSA INTRINSIC SAFETY APPROVALS

205IC LOW POWER CIRCUIT CONNECTION WITH INTRINSIC SAFETY BARRIERS

Ex ia

INTRINSICALLY SAFE/SECURITE INTRINSEQUE
LOWPOWER, ("M" OUTPUT CODE)

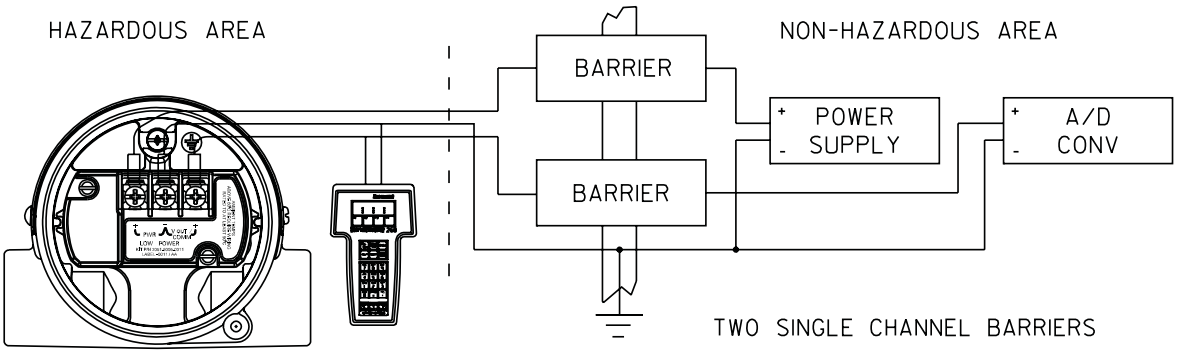

ROSEMOUNT MODEL 275 or 375

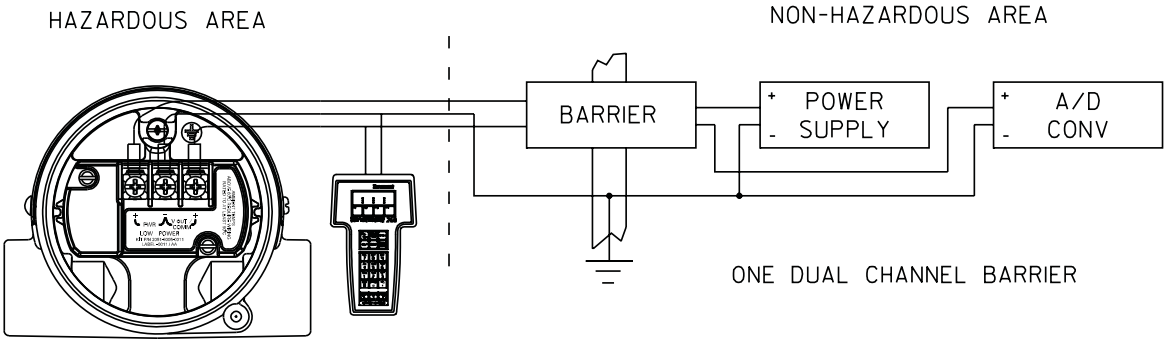

ROSEMOUNT MODEL 275 or 375

APPROVED FOR CLASS I, DIVISION I, GROUPS A,B,C,D WHEN USED IN CIRCUIT WITH TWO CSA APPROVED SINGLE CHANNEL SAFETY BARRIERS, ONE WITH APPROVED SAFETY PARAMETERS OF 28 VOLTS OR LESS AND 300 OHMS OR MORE IN +PWR LINE, AND ONE WITH APPROVED SAFETY PARAMETERS OF 10 VOLTS OR LESS AND 47 OHMS OR MORE IN Vout LINE, OR ONE CSA APPROVED DUAL CHANNEL SAFETY BARRIER WITH IDENTICAL APPROVED SAFETY PARAMETERS CONNECTED IN LIKE MANNER, AS ABOVE.

APPROVED FOR CLASS I, DIVISION I, GROUPS C,D WHEN USED IN CIRCUIT WITH TWO CSA APPROVED SINGLE CHANNEL SAFETY BARRIERS, ONE WITH APPROVED SAFETY PARAMETERS OF 30 VOLTS OR LESS AND 150 OHMS OR MORE IN +PWR LINE AND ONE WITH APPROVED SAFETY PARAMETERS OF 10 VOLTS OR LESS AND 47 OHMS OR MORE IN Vout LINE.

Rosemount Inc. 8200 Market Boulevard Chanhassen, MN 55317 USA			CAD MAINTAINED (MicroStation)
DR. Myles Lee Miller	SIZE A	FSCM NO	DWG NO. 02051-1008
ISSUED	SCALE N/A	WT. ———	SHEET 4 OF 9

Form Rev AC

REVISIONS				
REV	DESCRIPTION	CHG. NO.	APP'D	DATE
AB				

FIELDBUS, ("F" or "W" OUTPUT CODE)

DEVICE	PARAMETERS	APPROVED FOR CLASS I, DIV.I
CSA APPROVED SAFETY BARRIER	30 V OR LESS 300 OHMS OR MORE 28 V OR LESS 235 OHMS OR MORE 25 V OR LESS 160 OHMS OR MORE 22 V OR LESS 100 OHMS OR MORE	GROUPS A, B, C, D

CSA INTRINSIC SAFETY APPROVALS
CIRCUIT CONNECTION WITH BARRIER OR CONVERTER
Ex ia
INTRINSICALLY SAFE/SECURITE INTRINSEQUE
FIELDBUS, ("F" or "W" OUTPUT CODE)

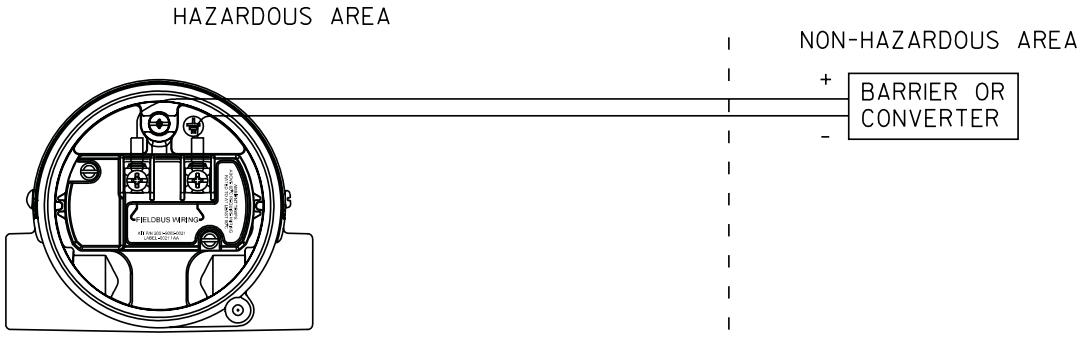

ROSEMOUNT **
MODELS INCLUDED
[WITH OR WITHOUT TI
(TRANSIENT PROTECTION) OPTION]
2051C, L, T

WARNING - EXPLOSION HAZARD - SUBSTITUTION OF COMPONENTS MAY IMPAIR SUITABILITY FOR CLASS I, DIVISION I.

AVERTISSEMENT - RISQUE D'EXPLOSION - LA SUBSTITUTION DE COMPOSANTS PEUT RENDRE CE MATERIEL INACCEPTABLE POUR LES EMPLACEMENTS DE CLASSE I, DIVISION I.

Rosemount Inc.
8200 Market Boulevard
Chanhassen, MN 55317 USA

CAD MAINTAINED (MicroStation)

DR. Myles Lee Miller	SIZE A	FSCM NO	DWG NO. 02051-1008	
ISSUED	SCALE N/A	WT. ———		SHEET 5 OF 9

Form Rev AC

REVISIONS				
REV	DESCRIPTION	CHG. NO.	APP'D	DATE
AB				

FISCO CONCEPT APPROVALS

THE FISCO CONCEPT ALLOWS INTERCONNECTION OF INTRINSICALY SAFE APPARATUS TO ASSOCIATED APPARATUS NOT SPECIALLY EXAMINED IN SUCH COMBINATION. FOR THIS INTERCONNECTION TO BE VALID THE VOLTAGE (U_1 or Vmax), THE CURRENT (I_1 or Imax), AND THE POWER (P_1 or Pma) THAT INTRINSICALLY SAVE APPARATUS CAN RECEIVE AND REMAIN INTRINSICALY SAFE, INCLUDING FAULTS, MUST BE EQUAL OR GREATER THAN THE VOLTAGE (Uo, Voc, or Vt), THE CURRENT (Io, Isc, or It), AND THE POWER (Po or Pmax) LEVELS WHICH CAN BE DELIVERED BY THE ASSOCIATED APPARATUS, CONSIDERING FAULTS AND APPLICABLE FACTORS. ALSO, THE MAXIMUM UNPROTECTED CAPACITANCE (C_1) AND THE INDUCTANCE (L_1) OF EACH APPARATUS (BESIDES THE TERMINATION) CONNECTED TO THE FIELDBUS MUST BE LESS THAN OR EQUAL TO 5nF AND 10μH RESPECTVELY.
ONLY ONE ACTIVE DEVICE IN EACH SECTION (USUALLY THE ASSOCIATED APPARATUS) IS ALLOWED TO CONTRIBUTE THE DESIRED ENERGY FOR THE FIELDBUS SYSTEM. THE ASSOCIATED APPARATUS' VOLTAGE Uo (or Voc or Vt) IS LIMITED TO A RANGE OF 14V TO 24 V.D.C. ALL OTHER EQUIPENT COMBINED IN THE BUS CABLE MUST BE PASSIVE (THEY CANNOT PROVIDE ENERGY TO THE SYSTEM, EXCEPT A LEAKAGE CURRENT OF 50 μA FOR EACH CONNECTED DEVICE) SEPARATELY POWERED EQUIPMENT REQUIRES A GALVANIC ISOLATION TO AFFIRM THAT THE INTRINSICALLY SAFE FIELDBUS CIRCUIT WILL REMAIN PASSIVE. THE PARAMETER OF THE CABLE USED TO INTERCONNECT THE DEVICES MUST BE IN THE FOLLOWING RANGE:

LOOP RESISTANCE R': 15...150 OHM/km
INDUCTANCE PER UNIT LENGTH L': 0.4...1mH/KM
CAPACITANCE PER UNLIT LENGTH C': 80...200nF

C' = C' LINE/LINE +0.5C' LINE/SCREEN, IF BOTH LINES ARE FLOATING, OR
C' = C' LINE/LINE +C' LINE/SCREEN, IF THE SCREEN IS CONNECTED TO ONE LINE
TRUNK CABLE LENGTH: ≤1000 m
SPUR CABLE LENGTH: ≤30 m
SPLICE LENGTH: ≤1 m

AN APPROVED INFALLIBLE LINE TERMINATION TO EACH END OF THE TRUNK CABLE, WITH THE FOLLOWING PARAMETERS IS APPROPRIATE:

R = 90...100 OHMS C = 2.2μF

AN ALLOWED TERMINATION MIGHT ALREADY BE LINKED IN THE ASSOCIATED APPARATUS. DUE TO I.S. REASONS, THE NUMBER OF PASSIVE APPARATUS CONNECTED TO THE BUS SEGMENT IS NOT LIMITED. IF THE RULES ABOVE ARE FOLLOWED, UP TO A TOTAL LENGTH OF 1000 m (THE SUMMATION OF TRUNK AND ALL SPUR CABLES), THE INDUCTANCE AND THE CAPACITANCE OF THE CABLE WILL NOT DAMAGE THE INTRINSIC SAFETY OF THE SYSTEM.

NOTES:
INTRINSICALLY SAFE CLASS I, DIV. 1, GROUPS A, B, C, D

1. THE MAXIMUM NON-HAZARDOUS AREA VOLTAGE MUST NOT EXCEED 250 V.
2. CAUTION: ONLY USE SUPPLY WIRES SUITABLE FOR 5°C ABOVE SURROUNDING TEMPERATURE.
3. WARNING: REPLACEMENT OF COMPONENTS MAY DAMAGE INTRINSIC SAFETY.

Rosemount Inc.
8200 Market Boulevard
Chanhassen, MN 55317 USA

CAD MAINTAINED (MicroStation)

DR. Myles Lee Miller	SIZE A	FSCM NO	DWG NO. 02051-1008	
ISSUED	SCALE N/A	WT. ———	SHEET 6 OF 9	

Form Rev AC

REVISIONS				
REV	DESCRIPTION	CHG. NO.	APP'D	DATE
AB				

HAZARDOUS (CLASSIFIED) LOCATION
CLASS I, DIVISION I, GROUPS A,B,C,D
CLASS II, DIVISION I, GROUPS E,F,G
CLASS III, DIVISION I

NON-HAZARDOUS AREA

ANY CSA APPROVED ASSOCIATED APPARATUS SUITABLE FOR FISCO CONCEPT

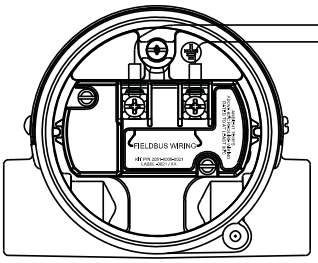

OUTPUT CODE F or W
MODELS INCLUDED
205IC, L, T

ANY CSA APPROVED INTRINSICALLY SAFE APPARATUS SUITABLE FOR FISCO CONCEPT

ANY CSA PPROVED TERMINATION WITH R=90...100 Ohms C=0...2.2 uF

C R

Rosemount Inc.
8200 Market Boulevard
Chanhassen, MN 55317 USA

CAD MAINTAINED (MicroStation)

DR. Myles Lee Miller	SIZE A	FSCM NO	DWG NO. 02051-1008
ISSUED	SCALE N/A	WT. ———	SHEET 7 OF 9

Form Rev AC

REVISIONS				
REV	DESCRIPTION	CHG. NO.	APP'D	DATE
AB				

2051 I.S. ENTITY PARAMETERS. (OUTPUT CODE A,F, or W)

BARRIER PARAMETERS (APPLICABLE TO OUTPUT CODE A,F, or W)

Pmax = 1.3 WATT OUTPUT F or W
Pmax = 1.0 WATT OUTPUT A

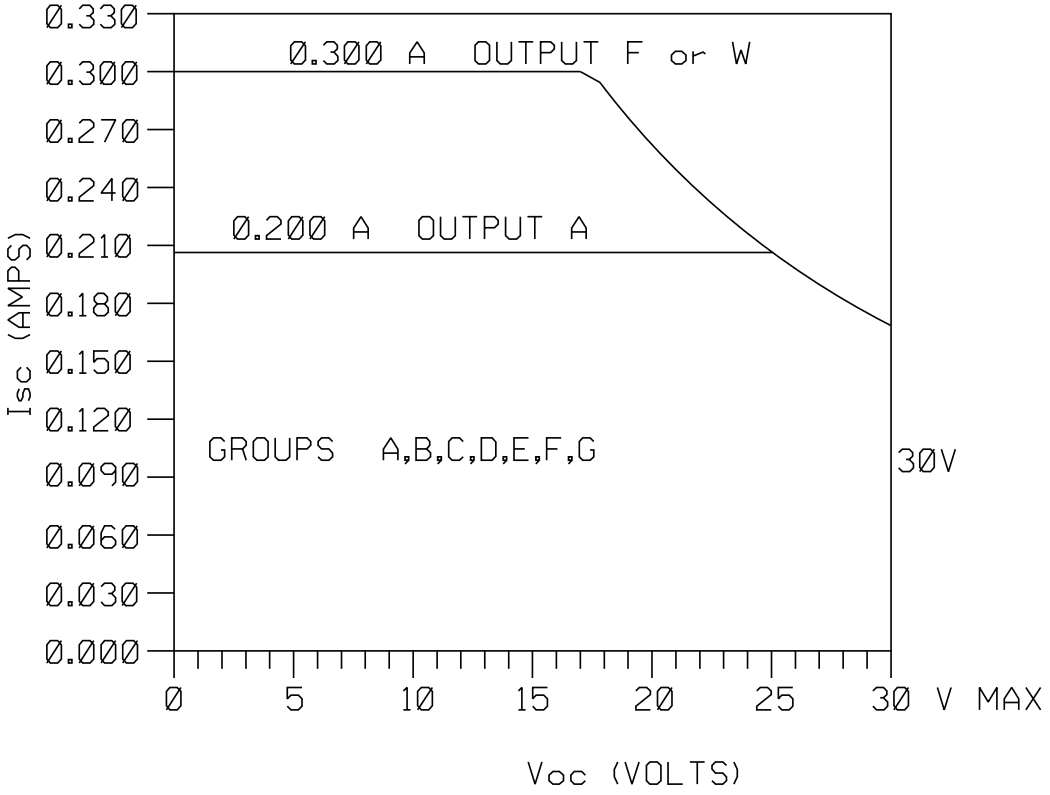

Rosemount Inc. 8200 Market Boulevard Chanhassen, MN 55317 USA			CAD MAINTAINED (MicroStation)	
DR. Myles Lee Miller	SIZE A	FSCM NO	DWG NO. 02051-1008	
ISSUED	SCALE N/A	WT. ———	SHEET 8 OF 9	

Form Rev AC

REVISIONS				
REV	DESCRIPTION	CHG. NO.	APP'D	DATE
AB				

ENTITY CONCEPT APPROVALS

THE ENTITY CONCEPT ALLOWS INTERCONNECTION OF INTRINSICALLY SAFE APPARATUS TO ASSOCIATED APPARATUS NOT SPECIFICALLY EXAMINED IN COMBINATION AS A SYSTEM. THE APPROVED VALUES OF MAX. OPEN CIRCUIT VOLTAGE (Voc) AND MAX. SHORT CIRCUIT CURRENT (Isc) AND MAX. POWER (Voc X Isc/4), FOR THE ASSOCIATED APPARATUS MUST BE LESS THAN OR EQUAL TO THE MAXIMUM SAFE INPUT VOLTAGE (Vmax), MAXIMUM SAFE INPUT CURRENT (Imax), AND MAXIMUM SAFE INPUT POWER (Pmax) OF THE INTRINSICALLY SAFE APPARATUS. IN ADDITION, THE APPROVED MAX. ALLOWABLE CONNECTED CAPACITANCE (Ca) OF THE ASSOCIATED APPARATUS MUST BE GREATER THAN THE SUM OF THE INTERCONNECTING CABLE CAPACITANCE AND THE UNPROTECTED INTERNAL CAPACITANCE (C_1) OF THE INTRINSICALLY SAFE APPARATUS, AND THE APPROVED MAX. ALLOWABLE CONNECTED INDUCTANCE (La) OF THE ASSOCIATED APPARATUS MUST BE GREATER THAN THE SUM OF THE INTERCONNECTING CABLE INDUCTANCE AND THE UNPROTECTED INTERNAL INDUCTANCE (L_1) OF THE INTRINSICALLY SAFE APPARATUS.

FOR OUTPUT CODE A
CLASS I, DIV. 1, GROUPS A, B, C AND D: CLASS I, ZONE 0, GROUP IIC

V_T = 30V	V_{OC} IS LESS THAN OR EQUAL TO 30V
I_T = 200mA	I_{SC} IS LESS THAN OR EQUAL TO 200mA
P_{MAX} = 1 WATT	$(\frac{Voc \times Isc}{4})$ IS LESS THAN OR EQUAL TO 1 WATT
C_I = .01μf	C_A IS GREATER THAN .01μf + C CABLE
L_I =10μH	L_A IS GREATER THAN 10μH + L CABLE

FOR OUTPUT CODE F or W
CLASS I, DIV. 1, GROUPS A, B, C AND D: CLASS I, ZONE 0, GROUP IIC

V_T = 30V	V_{OC} IS LESS THAN OR EQUAL TO 30V
I_T = 300mA	I_{SC} IS LESS THAN OR EQUAL TO 300mA
P_{MAX} = 1.3 WATT	$(\frac{Voc \times Isc}{4})$ IS LESS THAN OR EQUAL TO 1.3 WATT
C_I = 0μf	C_A IS GREATER THAN 0μf + C CABLE
L_I = 0μH	L_A IS GREATER THAN 0μH + L CABLE

FOR OUTPUT CODE M
CLASS I, DIV. 1, GROUPS A, B, C AND D: CLASS I, ZONE 0, GROUP IIC

V_T = 30V	V_{OC} IS LESS THAN OR EQUAL TO 30V
I_T = 200mA	I_{SC} IS LESS THAN OR EQUAL TO 200mA
P_{MAX} = 1 WATT	$(\frac{Voc \times Isc}{4})$ IS LESS THAN OR EQUAL TO 1 WATT
C_I = .02μf	C_A IS GREATER THAN .01μf + C CABLE
L_I =10μH	L_A IS GREATER THAN 10μH + L CABLE

* FOR T1 OPTION:

L_I =0.75mH	

NOTE: ENTITY PARAMETERS LISTED APPLY ONLY TO ASSOCIATED APPARATUS WITH LINEAR OUTPUT.

Rosemount Inc.
8200 Market Boulevard
Chanhassen, MN 55317 USA

CAD MAINTAINED (MicroStation)

DR. Myles Lee Miller	SIZE A	FSCM NO	DWG NO. 02051-1008
ISSUED	SCALE N/A	WT. ———	SHEET 9 OF 9

Form Rev AC

Appendix C Glossary

Some of the terms used in this manual relate specifically to the operation of Rosemount transmitters, hand-held HART Communicators, and other Rosemount products. The following list provides brief definitions. See the sections listed for additional information.

Analog Output Trim
Digital trim operation that allows adjustment of the output electronics to conform to the plant standard of current. Two types of analog output trim are available: 4–20 mA output trim and 4–20 mA other scale.

Cloning
Off-line operation that uses a HART-based communicator to copy configuration data from one transmitter to one or more other transmitters that require the same data.

Commissioning
Functions performed with the HART-based communicator and the transmitter that test the transmitter and test the loop, and verify transmitter configuration data.

Configuration
Process of setting parameters that determine how the transmitter operates.

Damping
Output function that increases the response time of the transmitter to smooth the output when there are rapid input variations.

Descriptor
Sixteen-character field for additional identification of the transmitter, its use, or location. The descriptor is stored in the transmitter and can be changed using the HART-based communicator.

Digital Trim
Format function that allows you to adjust the transmitter characterization for purposes of digital calibration to plant standards. Digital trim includes two separate operations: sensor trim and analog output trim.

Failure Mode Alarm
Transmitter function that drives the analog output to a jumper-selectable high or low value in the event of an electronics failure.

Factory Characterization
Factory process during which each sensor module is subjected to pressures and temperatures covering the full operating range.
The sensor module memory stores data generated from this process for use by the microprocessor in correcting the transmitter output during operation.

Full Trim
Sensor trim function in which two accurate, end-point pressures are applied and all output is linearized between them. The selected end points should always be equal to or outside the LRV and URV.

HART (Highway Addressable Remote Transducer) Protocol
Communications standard that provides simultaneous analog and digital signal transmission between control rooms and field devices such as transmitters.

Lower Range Limit (LRL) Lowest value of the measured variable that the transmitter can be configured to measure.

Lower Range Value (LRV) Lowest value of the measured variable that the analog output of the transmitter is currently configured to measure.

Multidropping The connection of several transmitters to a single communications transmission line. Communication between the host and the transmitters takes place digitally with the analog output of the transmitters deactivated.

Reranging Configuration function that changes the transmitter 4 and 20 mA settings.

Send Data HART-based communicator command that transfers configuration data from the hand-held communicator's memory to the transmitter memory.

Sensor Trim Digital trim function that allows you to adjust the digital process variable reading to a precise pressure input. Zero trim and sensor trim are the two sensor trim functions.

Smart Term used to describe instruments that are microprocessor-based and feature advanced communications capabilities.

Span Algebraic difference between the upper and lower range values.

Tag Eight-character field for identifying the transmitter. The tag is stored in the transmitter and can be changed using the HART Communicator and the transmitter information function.

Transmitter Address Unique number (1-15) used to identify a multidropped transmitter. Transmitters that are not multidropped have 0 as an address.

Transmitter Security Jumper-selectable feature that prevents accidental or deliberate changes to configuration data.

Upper Range Limit (URL) Highest value of the measured variable that the transmitter can be configured to measure.

Upper Range Value (URV) Highest value of the measured variable that the analog output of the transmitter is currently configured to measure.

Zero Trim A zero-based, one-point adjustment used in differential pressure applications to compensate for mounting position effects or zero shifts caused by static pressure.

Index

A
Address
Changing 3-24
Alarm 3-17
Burst mode values 3-17
Configuration procedure . 2-23
Failure mode 3-16
Level verification 3-18
Multidrop mode values . . 3-17
Analog output trim 4-7
Approvals B-1
Drawings B-8

B
Basic setup 3-9
Block diagram 1-3
Board, electronics 2-24
Bolts
Configurations 2-16
Installation 2-15
Material 2-15
Brackets
Mounting 2-13
Bubbler Liquid Level
Measurement 2-37
Bubbler System in Open Vessel 2-37
Liquid Level Measurement 2-37
Burst mode
Advanced functions 3-22
Alarm and saturation values 3-17

C
Calibration 4-2
Choosing a procedure . . . 4-6
Frequency, determining . . 4-4
Full trim 4-11
Recal factory trim
Analog output 4-9
Sensor trim 4-12
Sensor trim 4-10
Tasks 4-3
Zero trim 4-10
Cloning 3-20
Closed Vessels
Dry Leg Condition 2-35
Liquid Level Measurement 2-35
Wet Leg Condition 2-36
Communicator 5-5
Compensating line pressure . 4-13
Configuration
Applying a user
configuration . . 3-21
Bolts 2-16
Cloning 3-20
Data review 3-4
LCD display
Custom 3-15
LCD meter 3-14
Recalling 3-20
Reusable copy 3-21
Saving 3-20
Considerations
Compatibility 2-2
Environmental 2-3
General 2-2
Mechanical 2-3
Curr Fixed 5-4
Curr Saturd 5-4
Custom configuration
LCD display 3-15

D
Damping 3-13
Detailed setup 3-16, 3-17
Diagnostics
Messages 5-4
Curr Fixed 5-4
Curr Saturd 5-4
Error 5-3
Fail 5-3
Fail Config 5-3
Fail Elect 5-3
Fail Module 5-3
HART Communicator 5-5
Local Dsbld 5-5
Loop test 5-4
Operation 5-4
Press Limit 5-4
Span Fail 5-4
Span Pass 5-4
Temp Limit 5-4
Warnings 5-3
Write protect 5-5
Zero Fail 5-4
Zero Pass 5-4
Diagnostics and service 3-18
Loop
Test 3-18
Transmitter test 3-18
Diagrams
Bench hook-up 3-3
Field hook-up 3-3
Installation 2-18
Low power 3-3
Multidrop network 3-23
Typical multidrop network 3-23
Digital to analog trim 4-7
Other scale 4-8
Dimensional Drawings 2-5
Disassembly
Before disassembling 5-8
Remove electronics board . 5-9
Remove from service 5-8
Sensor module 5-9
Disassembly procedures 5-8
Drawings
Approval B-8
Dry Leg Condition
Liquid Level Measurement 2-35

E
Electrical Installation Considerations
Grounding 2-26
Signal and Test Terminals 2-26
Wiring 2-26
Electronics board 2-24
Low power 2-24
Environmental Considerations 2-31
Environmental considerations . 2-3
Error 5-3

F
Fail 5-3
Config 5-3
Elect 5-3
Module 5-3
Failure mode
Alarm values 3-16
Saturation values 3-16
Full trim 4-11

G
Gas mounting requirements . . 2-18
Grounding 2-26
Transmitter Case 2-29

H
HART Communicator
Diagnostics 5-5
Hazardous Locations 2-31

Housing
Remove 5-9

I
Impulse piping 2-17
Installation 2-5, 2-12
Bolts 2-15
Cover 2-12
Environmental Considerations . 2-31
HART flowchart 2-4
Hazardous Locations . . . 2-31
Housing rotation 2-21
Model 305 manifold 2-32
Model 306 manifold 2-32
Mounting 2-12
Brackets 2-13
Torque values 2-15
Process Flange Orientation 2-12
Signal Wiring Grounding 2-29
Introduction 1-1

J
Jumper
Alarm 2-22
Security 2-22

L
LCD display
Custom configuration . . . 3-15
LCD meter 3-14
Configuration 3-14
Options 3-15
Lightning 2-28
Line pressure
Compensating 4-13
Liquid Level Measurement
Bubbler System in Open Vessel 2-37
Closed Vessels 2-35
Dry Leg Condition 2-35
Open Vessels 2-35
Wet Leg Condition 2-36
Liquid mounting requirements 2-18
Local Dsbld 5-5
Loop
Setting to manual 3-2
Test 5-4
Loop test 3-18
Low power
Diagrams 3-3
Electronics board 2-24

M
Maintenance 4-1
Manifold installations 2-32
Manual
Use of 1-1
Mechanical considerations . . . 2-3
Meter, LCD display 3-15
Mounting
Bolt installation
Torque values 2-15
Installation 2-12
Mounting requirements
Gas 2-18
Liquid 2-18
Steam 2-18
Multidrop communication . . . 3-17
Advanced functions 3-23
Communicating 3-24
Diagram 3-23

N
NAMUR-compliant values . . 3-17

O
Open Vessels
Liquid Level Measurement 2-35
Operation 4-1, 5-4
Block diagram 1-3
Options
LCD meter 3-15
Output
Process variables 3-8
Recal factory trim 4-9
Sensor temperature 3-8
Transfer function 3-9

P
Piping, impulse 2-17
Press Limit 5-4
Process
Connections 2-19
Process variables 3-8
Units 3-9

R
Reassembly
Attaching sensor module 5-10
Installing terminal block . 5-10
Process sensor body . . . 5-10
Recall factory trim
Analog output 4-9
Sensor trim 4-12
Recalling 3-20
Rerange 3-10
AMS only 3-13
HART Communicator only 3-11
Pressure input source
With HART Communicator 3-12
With local zero and span 3-12
Returning products and materials 5-11
Reusable copy 3-21

S
Saturation
Burst mode values 3-17
Failure mode 3-16
Multidrop mode values . .3-17
Saving a configuration 3-20
Security 2-22
Sensor
Module
Installing 5-10
Removing 5-9
Sensor Temperature 3-8
Sensor temperature 3-8
Sensor trim 4-10
Service and Diagnostics 3-18
Service Support 1-1
Setup
Basic 3-9
Detailed 3-16, 3-17
Signal Wiring Grounding 2-29
Software
Lock out 2-22
Span
Button 2-22
Fail 5-4
Pass 5-4
Spare parts A-25
Steam mounting requrements 2-18

T
Tagging 2-3
Temp limit 5-4
Terminal block
Installing 5-10
Terminal Side 2-12
Test 3-18
Torque values 2-15
Transfer function 3-9
Transmitter Case 2-29
Transmitter functions 4-1
Transmitter test 3-18

Trim
Analog output 4-7
Digital to Analog 4-7
Other scale 4-8
Full 4-11
Recall factory
Analog output 4-9
Sensor trim 4-12
Sensor 4-10
Zero 4-10
Troubleshooting 5-1
Reference table 5-2

U
Units,Process variable 3-9

V
Vessels
Open/Closed 2-35

W
Warnings 5-3
Wet Leg Condition
Example (Figure 4-6) . . . 2-36
Liquid Level Measurement 2-36
Wiring 2-26
Diagrams
Low power 3-3
Signal Terminals 2-26
Test Terminals 2-26
Wiring diagrams
Bench hook-up 3-3
Field hook-up 3-3
Write protect 2-22, 5-5

X
Xmtr Info 5-4

Z
Zero
Button 2-22
Fail 5-4
Pass 5-4
Zero trim 4-10

Standard Terms and Conditions of Sale can be found at www.rosemount.com\terms_of_sale
The Emerson logo is a trade mark and service mark of Emerson Electric Co.
Rosemount and the Rosemount logotype are registered trademarks of Rosemount Inc.
Coplanar is a trademark of Rosemount Inc.
PlantWeb is a mark of one of the Emerson Process Management companies.
HART is a registered trademark of the HART Communications Foundation.
Syltherm and D.C. are registered trademarks of Dow Corning Co.
Neobee M-20 is a registered trademark of Stephan Chemical Co.
The 3-A symbol is a registered trademark of the 3-A Sanitary Standards Symbol Council.
FOUNDATION fieldbus is a registered trademark of the Fieldbus Foundation.

All other marks are the property of their respective owners.

Emerson Process Management

Rosemount Inc.
8200 Market Boulevard
Chanhassen, MN 55317 USA
T 1-800-999-9307
Int'l 1-952-906-8888
F (952) 949-7001

www.rosemount.com

Emerson Process Management
Argelsrieder Feld 3
82234 Wessling
Germany
Tel 49 (8153) 9390
Fax 49 (8153) 939172

Emerson Process Management Asia Pacific Private Limited
1 Pandan Crescent
Singapore 128461
Tel (65) 777-8211
Fax (65) 777-0947
Enquiries@AP.EmersonProcess.com

© 2008 Rosemount Inc. All rights reserved.

EMERSON
Process Management

Reference Manual
00809-0100-4728, Rev KA
July 2010

Rosemount 644 Head and Rail Mount Temperature Transmitters

FOUNDATION

HART COMMUNICATION PROTOCOL

ROSEMOUNT®

www.rosemount.com

EMERSON™
Process Management

Rosemount 644 Temperature Transmitters

Rosemount 644 Hardware Revision	**26**
HART® Device Revision	**5.6**
Field Communicator Field Device Revision	**Dev v6, DD v1**
FOUNDATION™ fieldbus Hardware Revision	**5**
FOUNDATION fieldbus Device Revision	**1**

NOTICE

Read this manual before working with the product. For personal and system safety, and for optimum product performance, make sure to thoroughly understand the contents before installing, using, or maintaining this product.

The United States has two toll-free assistance numbers and one international number.

Customer Central
1-800-999-9307 (7:00 a.m. to 7:00 P.M. CST)

National Response Center
1-800-654-7768 (24 hours a day)
Equipment service needs

International
1-(952) 906-8888

⚠CAUTION

The products described in this document are NOT designed for nuclear-qualified applications.

Using non-nuclear qualified products in applications that require nuclear-qualified hardware or products may cause inaccurate readings.

For information on Rosemount nuclear-qualified products, contact a Emerson Process Management Sales Representative.

Table of Contents

SECTION 1 Introduction
Safety Messages 1-1
Overview 1-2
Considerations 1-3
Return of Materials 1-4

SECTION 2 Installation
Safety Messages 2-1
Mounting 2-3
Installation 2-4
Wiring 2-9
Power Supply 2-13

SECTION 3 HART Configuration
Overview 3-1
Safety Messages 3-1
Commissioning 3-2
Field Communicator 3-3
Configuration 3-3
AMS 3-6
Multidrop Communication 3-18
Operation and Maintenance 3-19

SECTION 4 Foundation fieldbus Configuration
Overview 4-1
Safety Messages 4-1
General Block Information 4-2
Foundation fieldbus function blocks 4-4
Operation and Maintenance 4-14

APPENDIX A Specifications and Reference Data
HART and Foundation Fieldbus Specifications A-1
Foundation Fieldbus Specifications A-4
4–20 mA / HART Specifications A-6
Dimensional Drawings A-10
Ordering Information A-12
Stainless Steel Housing A-18

APPENDIX B Product Certifications
Approved Manufacturing Locations B-1
European Union Directive Information B-1
Hazardous Locations Certificates B-2
Installation Drawings B-10

APPENDIX C Foundation fieldbus Block Information
Basic Setup C-1
Resource Block C-1
Sensor Transducer Block C-5
Analog Input (AI) Function Block C-8
LCD Transducer Block C-12
PID Block C-13

Section 1 Introduction

Safety Messages . . . . . page 1-1
Overview . . . . . page 1-2
Considerations . . . . . page 1-3
Return of Materials . . . . . page 1-4

SAFETY MESSAGES

Instructions and procedures in this section may require special precautions to ensure the safety of the personnel performing the operations. Information that potentially raises safety issues is indicated by a warning symbol (⚠). Please refer to the following safety messages before performing an operation preceded by this symbol.

Warnings

⚠WARNING

Failure to follow these installation guidelines could result in death or serious injury.

- Make sure only qualified personnel perform the installation.

Explosions could result in death or serious injury.

- Do not remove the connection head cover in explosive atmospheres when the circuit is live.
- Before connecting HART or FOUNDATION fieldbus in an explosive atmosphere, make sure the instruments in the loop are installed in accordance with intrinsically safe or non-intrinsic field wiring practices.
- Verify that the operating atmosphere of the transmitter is consistent with the appropriate hazardous locations certifications.
- All connection head covers must be fully engaged to meet explosion-proof requirements.

Process leaks could result in death or serious injury.

- Do not remove the thermowell while in operation.
- Install and tighten thermowells and sensors before applying pressure

Electrical shock could cause death or serious injury.

- Use extreme caution when making contact with the leads and terminals.

OVERVIEW

Manual

This manual is designed to assist in the installation, operation, and maintenance of Rosemount 644 head mount and 644 rail mount.

Section 1: Introduction

- Transmitter and Manual Overview
- Considerations
- Return of Material

Section 2: Installation

- Mounting
- Installation
- Wiring
- Power Supply
- Commissioning

Section 3: HART Configuration

- Field Communicator
- Configuration
- Multidrop Communication

Section 4: FOUNDATION fieldbus Configuration

- Calibration
- Hardware Maintenance
- Diagnostic Messaging

Appendix A: Specifications and Reference Data

- Specifications
- Dimensional drawings
- Ordering Information
- Biotechnology, Pharmaceutical Industries, and Sanitary Applications

Appendix B: Approvals

- Product Certifications
- Installation Drawings

Appendix C: Foundation fieldbus Block Information

- Information regarding the Function Blocks

Transmitter

Features of the Rosemount 644 include:

- Accepts inputs from a wide variety of sensors
- Configuration using HART protocol or FOUNDATION fieldbus
- Electronics that are completely encapsulated in epoxy and enclosed in a metal housing, making the transmitter extremely durable and ensuring long-term reliability
- A compact size and two housing options allowing mounting flexibility for the control room or the field

Refer to the following literature for a full range of compatible connection heads, sensors, and thermowells provided by Emerson Process Management.

- Temperature Sensors and Assemblies Product Data Sheet, Volume 1 (document number 00813-0100-2654)
- Temperature Sensors and Assemblies Product Data Sheet, Volume 2 (document number 00813-0200-2654)

CONSIDERATIONS

General

Electrical temperature sensors such as RTDs and thermocouples produce low-level signals proportional to their sensed temperature. The 644 converts the low-level sensor signal to a standard 4–20 mA dc, digital HART, or digital FOUNDATION fieldbus signal that is relatively insensitive to lead length and electrical noise. This signal is then transmitted to the control room via two wires.

Commissioning

The transmitter can be commissioned before or after installation. It may be useful to commission it on the bench, before installation, to ensure proper operation and to become familiar with its functionality. Make sure the instruments in the loop are installed in accordance with intrinsically safe, FISCO, or non-incendive field wiring practices.

Mechanical

Location

When choosing an installation location and position, take into account the need for access to the transmitter.

Special Mounting

Special mounting hardware is available for mounting a 644 head mount transmitter to a DIN rail, or assembling a new 644 head mount to an existing threaded sensor connection head (former option code L1).

Electrical

Proper electrical installation is necessary to prevent errors due to sensor lead resistance and electrical noise. For best results, shielded cable should be used in electrically noisy environments.

Make wiring connections through the cable entry in the side of the connection head. Be sure to provide adequate clearance for cover removal.

Environmental

The transmitter electronics module is permanently sealed within the housing, resisting moisture and corrosive damage. Verify that the operating atmosphere of the transmitter is consistent with the appropriate hazardous locations certifications.

Temperature Effects

The transmitter will operate within specifications for ambient temperatures between –40 and 185 °F (–40 and 85 °C). Heat from the process is transferred from the thermowell to the transmitter housing. If the expected process temperature is near or beyond specification limits, consider the use of additional thermowell lagging, and extension nipple, or a remote mounting configuration to isolate the transmitter from the process.

Figure 1-1 provides an example of the relationship between transmitter housing temperature rise and extension length.

Figure 1-1. 644 head mount Transmitter Connection Head Temperature Rise vs. Extension Length

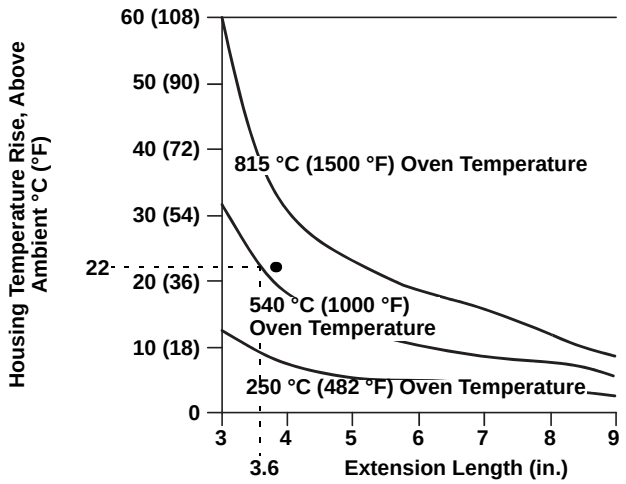

Example

The transmitter specification limit is 85 °C. If the ambient temperature is 55 °C and the process temperature to be measured is 800 °C, the maximum permissible connection head temperature rise is the transmitter specification limit minus the ambient temperature (moves 85 to 55 °C), or 30 °C.

In this case, an extension of 100 mm meets this requirement, but 125 mm provides a margin of 8 °C, thereby reducing any temperature effects in the transmitter.

RETURN OF MATERIALS

To expedite the return process in North America, call the Emerson Process Management National Response Center toll-free at 800-654-7768. This center, available 24 hours a day, will assist you with any needed information or materials.

⚠ The center will ask for the following information:

- Product model
- Serial numbers
- The last process material to which the product was exposed

The center will provide

- A Return Material Authorization (RMA) number
- Instructions and procedures that are necessary to return goods that were exposed to hazardous substances

For other locations, please contact a Emerson Process Management sales representative.

NOTE
If a hazardous substance is identified, a Material Safety Data Sheet (MSDS), required by law to be available to people exposed to specific hazardous substances, must be included with the returned materials.

Section 2 Installation

Safety Messages . . . . . page 2-1
Mounting . . . . . page 2-3
Installation . . . . . page 2-4
Wiring . . . . . page 2-9
Power Supply . . . . . page 2-13

SAFETY MESSAGES

Instructions and procedures in this section may require special precautions to ensure the safety of the personnel performing the operations. Information that potentially raises safety issues is indicated by a warning symbol (⚠). Please refer to the following safety messages before performing an operation preceded by this symbol.

Warnings

⚠WARNING

Failure to follow these installation guidelines could result in death or serious injury.

- Make sure only qualified personnel perform the installation.

Explosions could result in death or serious injury.

- Do not remove the connection head cover in explosive atmospheres when the circuit is live.
- Before connecting a Field Communicator in an explosive atmosphere, make sure the instruments in the loop are installed in accordance with instrinsically safe or non-incendive field wiring practices.
- Verify that the operating atmosphere of the transmitter is consistent with the appropriate hazardous locations certifications.
- All connection head covers must be fully engaged to meet explosion-proof requirements.

Process leaks could result in death or serious injury.

- Do not remove the thermowell while in operation.
- Install and tighten thermowells and sensors before applying pressure

Electrical shock could cause death or serious injury.

- Use extreme caution when making contact with the leads and terminals.

Figure 2-1. Installation Flowchart

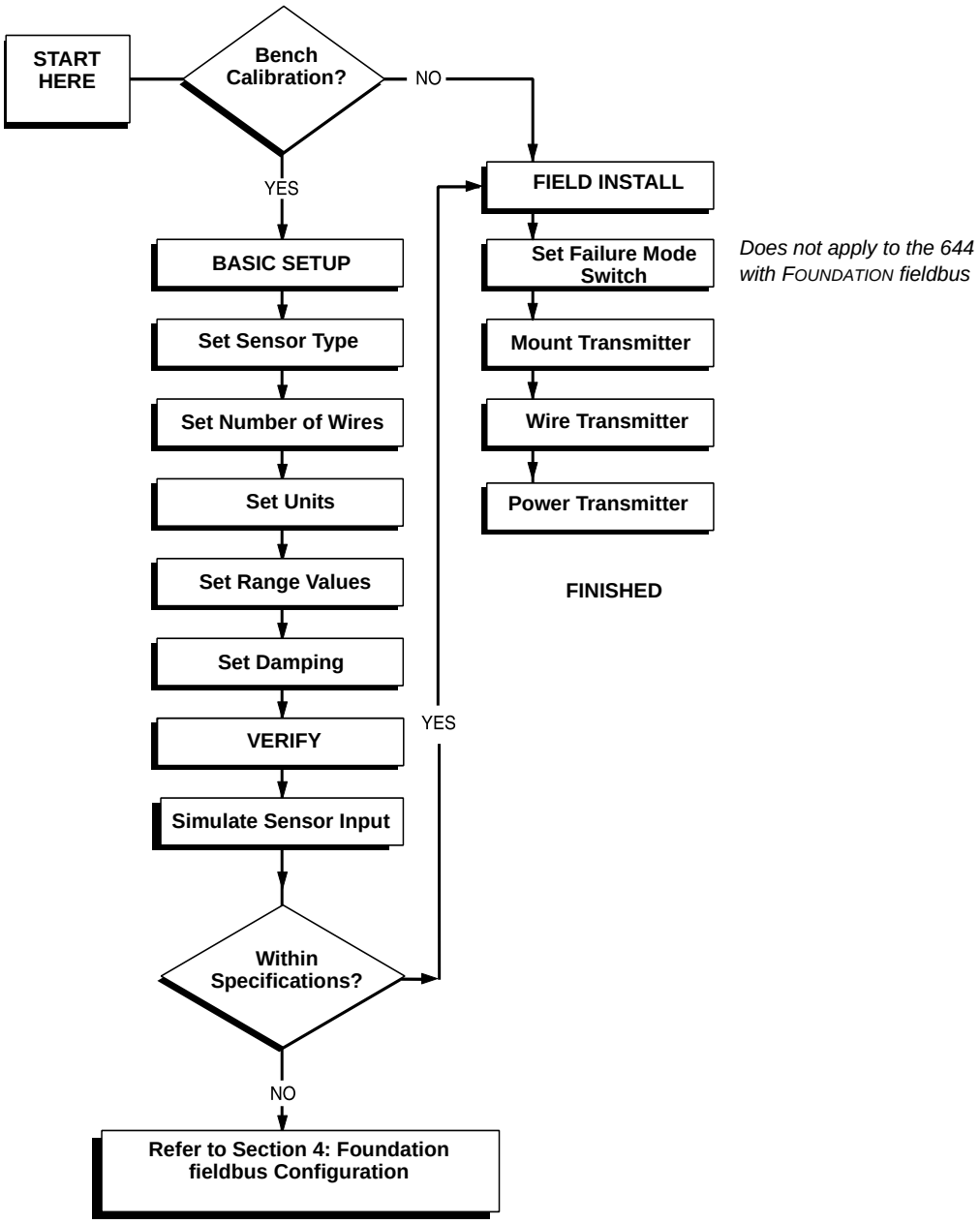

MOUNTING

Mount the transmitter at a high point in the conduit run to prevent moisture from draining into the transmitter housing.

The 644 head mount installs

- In a connection head or universal head mounted directly on a sensor assembly
- Apart from a sensor assembly using a universal head
- To a DIN rail using an optional mounting clip.

The 644 rail mount attaches directly to a wall or to a DIN rail.

Mounting a 644H to a DIN Rail

To attach a head mount transmitter to a DIN rail, assemble the appropriate rail mounting kit (part number 00644-5301-0010) to the transmitter as shown in Figure 2-2. Follow the procedure under “Rail Mount Transmitter and Sensor (HART only)”.

Figure 2-2. Assembling Rail Clip Hardware to a 644H

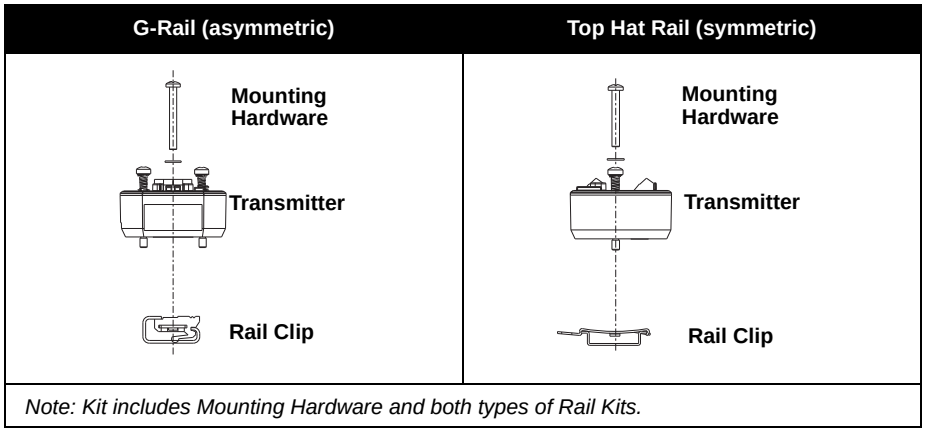

Retrofitting a 644H for Use in an Existing Threaded Sensor Connection Head

To mount a 644H in an existing threaded sensor connection head (former option code L1), order the 644H retrofit kit (part number 00644-5321-0010). The retrofit kit includes a new mounting bracket and all associated hardware necessary to facilitate the installation of the 644H in the existing head. See Figure 2-3.

Figure 2-3. Assembling 644H for Use in an Existing L1 Connection Head

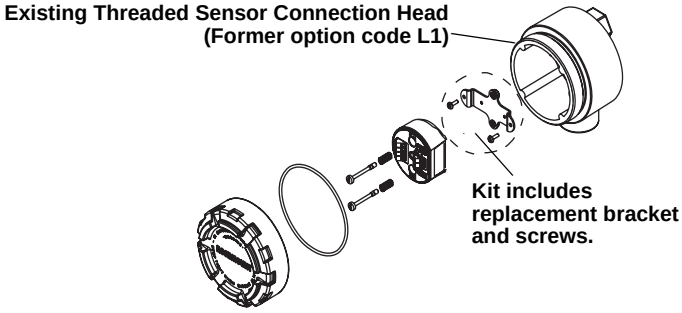

INSTALLATION

Typical European Installation

Head Mount Transmitter with DIN Plate Style Sensor (HART and FOUNDATION fieldbus)

1. Attach the thermowell to the pipe or process container wall. Install and tighten the thermowell before applying process pressure.
2. Verify the transmitter failure mode switch (HART only).
3. Assemble the transmitter to the sensor. Push the transmitter mounting screws through the sensor mounting plate and insert the snap rings (optional) into the transmitter mounting screw groove.
4. Wire the sensor to the transmitter (see Figure 2-9 on page 2-11).
5. Insert the transmitter-sensor assembly into the connection head. Thread the transmitter mounting screw into the connection head mounting holes.Assemble the extension to the connection head. Insert the assembly into the thermowell.
6. Attach a cable gland into the shielded cable.
7. Insert the shielded cable leads into the connection head through the cable entry. Connect and tighten the cable gland.
8. Connect the shielded power cable leads to the transmitter power terminals. Avoid contact with sensor leads and sensor connections.
9. Install and tighten the connection head cover. Enclosure covers must be fully engaged to meet explosion-proof requirements.

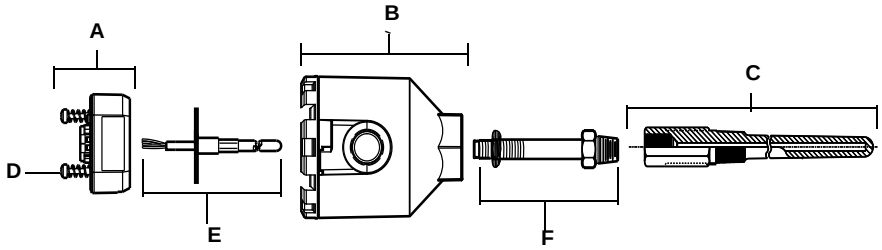

A = 644H Transmitter	D = Transmitter Mounting Screws
B = Connection Head	E = Integral Mount Sensor with Flying Leads
C = Thermowell	F = Extension

Typical North American Installation

Head Mount Transmitter with Threaded Sensor (HART and FOUNDATION fieldbus)

1. Attach the thermowell to the pipe or process container wall. Install and tighten thermowells before applying process pressure.
2. Attach necessary extension nipples and adapters to the thermowell. Seal the nipple and adapter threads with silicone tape.
3. Screw the sensor into the thermowell. Install drain seals if required for severe environments or to satisfy code requirements.
4. Verify the transmitter failure mode switch (HART only).
5. Pull the sensor wiring leads through the universal head and transmitter. Mount the transmitter in the universal head by threading the transmitter mounting screws into the universal head mounting holes.
6. Mount the transmitter-sensor assembly into the thermowell. Seal adapter threads with silicone tape.
7. Install conduit for field wiring to the conduit entry of the universal head. Seal conduit threads with silicone tape.
8. Pull the field wiring leads through the conduit into the universal head. Attach the sensor and power leads to the transmitter. Avoid contact with other terminals.
9. Install and tighten the universal head cover. Enclosure covers must be fully engaged to meet explosion-proof requirements.

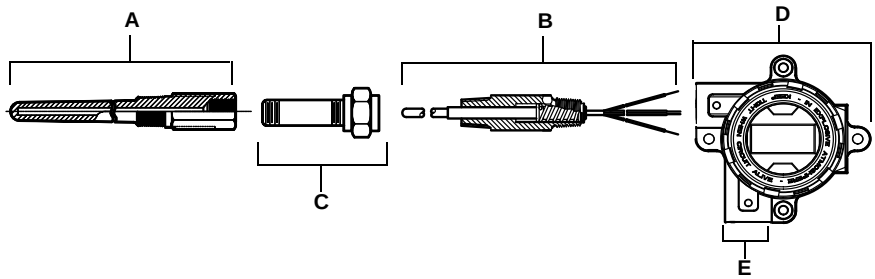

A = Threaded Thermowell	D = Universal Head
B = Threaded Style Sensor	E = Conduit Entry
C = Standard Extension	

Rail Mount Transmitter and Sensor (HART only)

1. Attach the transmitter to a suitable rail or panel.
2. Attach the thermowell to the pipe or process container wall. Install and tighten the thermowell, according to plant standards, before applying pressure.
3. Attach the sensor to the connection head and mount the entire assembly to the thermowell.
4. Attach and connect sufficient lengths of sensor lead wire from the connection head to the sensor terminal block.
5. Tighten the connection head cover. Enclosure covers must be fully engaged to meet explosion-proof requirements.
6. Run sensor lead wires from the sensor assembly to the transmitter.
7. Verify the transmitter failure mode switch.
8. Attach the sensor wires to the transmitter (see Figure 2-9 on page 2-11).

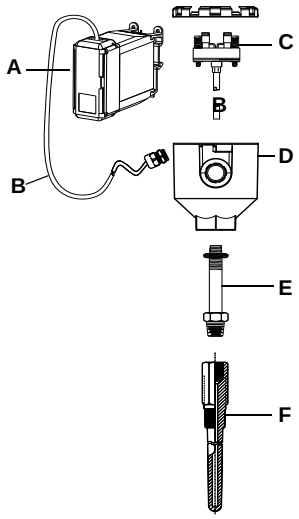

A = Rail Mount Transmitter
B = Sensor Leads with Cable Glands
C = Integral Mount Sensor with Terminal Block
D = Connection Head
E = Standard Extension
F = Threaded Thermowell

Rail Mount Transmitter with Threaded Sensor (HART only)

1. Attach the transmitter to a suitable rail or panel.
2. Attach the thermowell to the pipe or process container wall. Install and tighten the thermowell before applying pressure.
3. Attach necessary extension nipples and adapters. Seal the nipple and adapter threads with silicone tape.
4. Screw the sensor into the thermowell. Install drain seals if required for severe environments or to satisfy code requirements.
5. Screw the connection head to the sensor.
6. Attach the sensor lead wires to the connection head terminals.
7. Attach additional sensor lead wires from the connection head to the transmitter.
8. Attach and tighten the connection head cover. Enclosure covers must be fully engaged to meet explosion-proof requirements.
9. Set the transmitter failure mode switch
10. Attach the sensor wires to the transmitter (see Figure 2-9 on page 2-11).

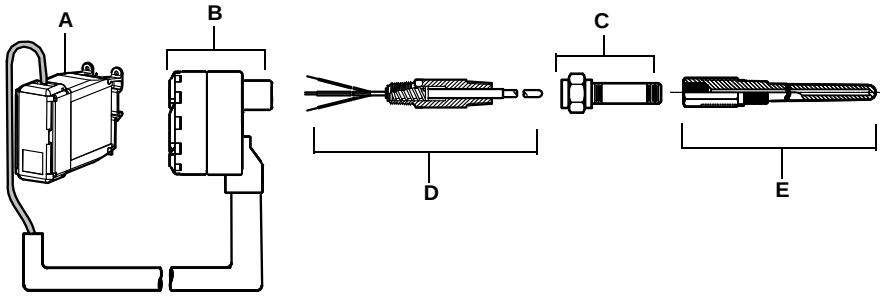

A = Rail Mount Transmitter	C = Standard Extension
B = Threaded Sensor Connection Head	D = Threaded Style Sensor
	E = Threaded Thermowell

LCD Display Installation

The LCD display provides local indication of the transmitter output and abbreviated diagnostic messages governing transmitter operation. Transmitters ordered with the LCD display are shipped with the meter installed. After-market installation of the meter can be performed the transmitter has a meter connector (transmitter revision 5.5.2 or later). After-market installation requires the meter kit (part number 00644-4430-0001), which includes:

- LCD display assembly (includes LCD display, meter spacer, and 2 screws)
- Meter cover with O-ring in place

Figure 2-4. Installing the LCD Display

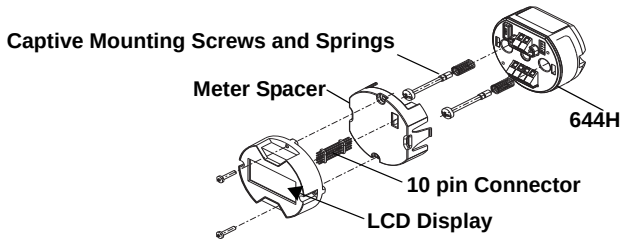

Use the following procedure to install the meter.

1. If the transmitter is installed in a loop, secure the loop and disconnect the power. If the transmitter is installed in an enclosure, remove the cover from the enclosure.
2. Decide meter orientation (the meter can be rotated in 90° increments). To change meter orientation, remove the screws located above and below the display screen. Lift the meter off the meter spacer. Remove the 8-pin plug and re-insert it in the location that will result in the desired viewing orientation.
3. Reattach the meter to the meter spacer using the screws. If the meter was rotated 90° from its original position it will be necessary to remove the screws from their original holes and re-insert them in the adjacent screws holes.
4. Line up the 10-pin connector with the 10-pin socket and push the meter into the transmitter until it snaps into place.
5. Attach the meter cover; tighten at least one-third turn after the O-ring contacts the transmitter housing. The cover must be fully engaged to meet explosion-proof requirements.
6. Use a Field Communicator, AMS software, or a FOUNDATION fieldbus Communication tool to configure the meter to the desired display. Refer to “LCD Meter Options (644H Only)” for information on configuring the LCD display.

NOTE
Observe the following LCD display temperature limits:
Operating: –4 to 185 °F (–20 to 85 °C)
Storage: –50 to 185 °F (–45 to 85 °C)

Multichannel Installations (HART)

In a HART installation, several transmitters can be connected to a single master power supply, as shown in Figure 2-5. In this case, the system may be grounded only at the negative power supply terminal. In multichannel installations where several transmitters depend on one power supply and the loss of all transmitters would cause operational problems, consider an uninterrupted power supply or a back-up battery. The diodes shown in Figure 2-5 prevent unwanted charging or discharging of the back-up battery.

Figure 2-5. Multichannel Installations

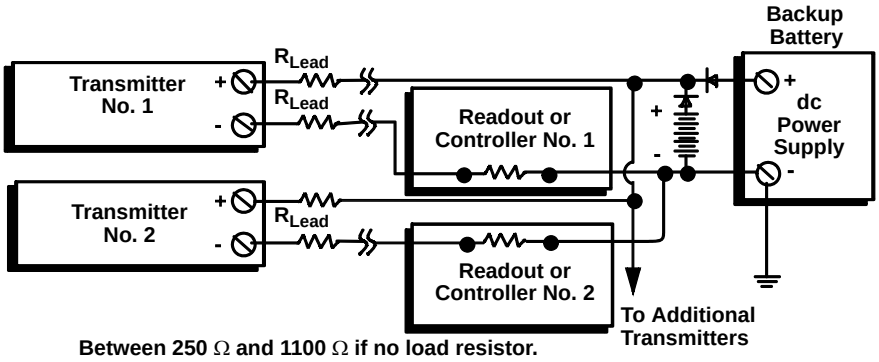

WIRING

⚠ All power to the transmitter is supplied over the signal wiring. Use ordinary copper wire of sufficient size to ensure that the voltage across the transmitter power terminals does not drop below 12.0 VDC for HART or 9 VDC for FOUNDATION fieldbus.

⚠ If the sensor is installed in a high-voltage environment and a fault condition or installation error occurs, the sensor leads and transmitter terminals could carry lethal voltages. Use extreme caution when making contact with the leads and terminals.

NOTE
Do not apply high voltage (e.g., ac line voltage) to the transmitter terminals. Abnormally high voltage can damage the unit. (Sensor and transmitter power terminals are rated to 42.4 VDC. A constant 42.4 volts across the sensor terminals may damage the unit.)

For multichannel HART installations, see above. The transmitters will accept inputs from a variety of RTD and thermocouple types. Refer to Figure 2-6 on page 2-10 when making sensor connections. Refer to Figure 2-8 on page 2-10 for FOUNDATION fieldbus installations.

Use the following steps to wire the power and sensor to the transmitter:

1. Remove the terminal block cover (if applicable).
2. Connect the positive power lead to the "**+**" terminal. Connect the negative power lead to the "**–**" terminal (see Figure 2-7).
3. Tighten the terminal screws. When tightening the sensor and power wires, the max torque is 6-in.-lbs (0.7 N-m).
4. Reattach and tighten the cover (if applicable).
5. Apply power (see "Power Supply").

Figure 2-6. Transmitter Power, Communication, and Sensor Terminals

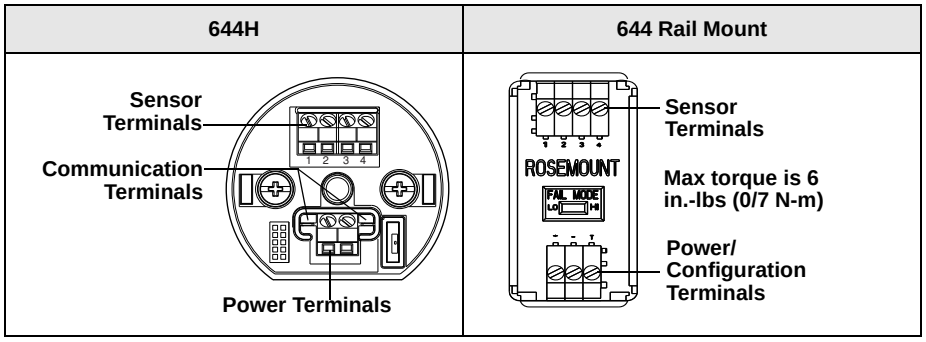

Figure 2-7. Connecting a HART Communication Tool to a Transmitter Loop

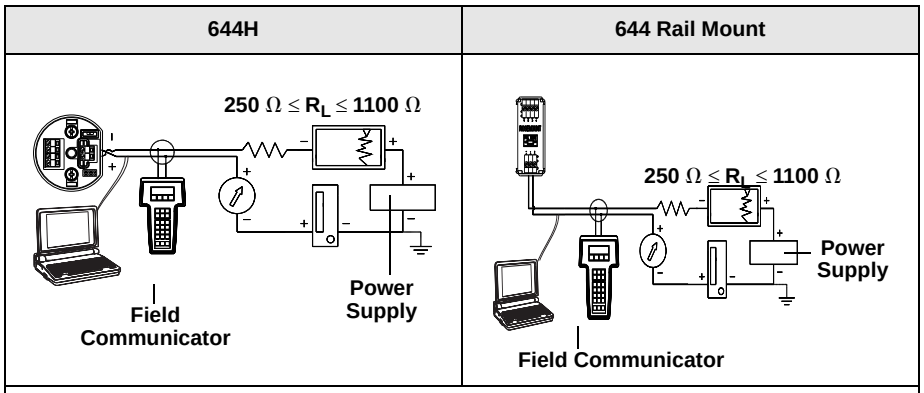

Note: Signal loop may be grounded at any point or left ungrounded.
Note: A Field Communicator may be connected at any termination point in the signal loop. The signal loop must have between 250 and 1100 ohms load for communications.
Note: Max torque is 6 in.-lbs (0/7 N-m)

Figure 2-8. Connecting a FOUNDATION fieldbus Host System to a Transmitter Loop

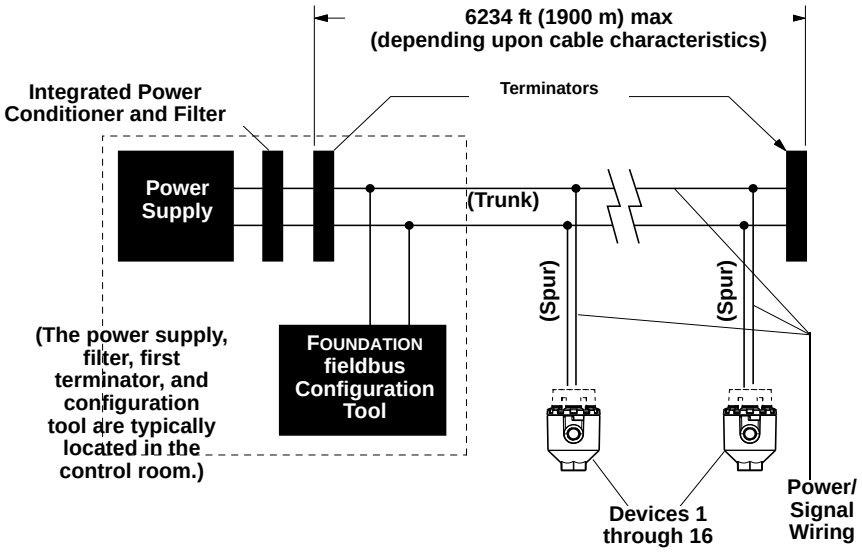

Sensor Connections

⚠ The 644 is compatible with a number of RTD and thermocouple sensor types. Figure 2-9 shows the correct input connections to the sensor terminals on the transmitter. To ensure a proper sensor connection, anchor the sensor lead wires into the appropriate compression terminals and tighten the screws.

Figure 2-9. Sensor Wiring Diagrams

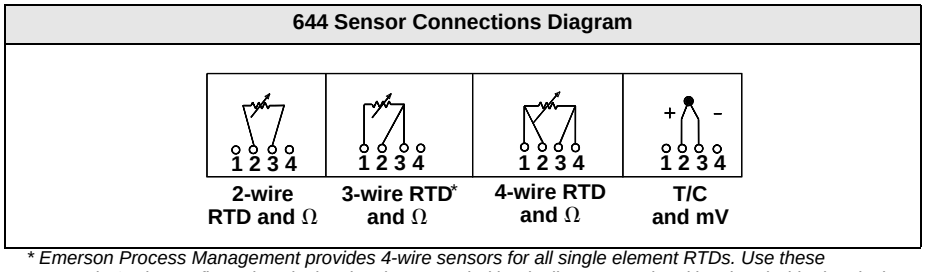

** Emerson Process Management provides 4-wire sensors for all single element RTDs. Use these RTDs in 3-wire configurations by leaving the unneeded leads disconnected and insulated with electrical tape.*

Thermocouple or Millivolt Inputs

The thermocouple can be connected directly to the transmitter. Use appropriate thermocouple extension wire if mounting the transmitter remotely from the sensor. Make millivolt inputs connections with copper wire. Use shielding for long runs of wire.

RTD or Ohm Inputs

The transmitters will accept a variety of RTD configurations, including 2-wire, 3-wire, 4-wire. If the transmitter is mounted remotely from a 3-wire or 4-wire RTD, it will operate within specifications, without recalibration, for lead wire resistances of up to 60 ohms per lead (equivalent to 6,000 feet of 20 AWG wire). In this case, the leads between the RTD and transmitter should be shielded. If using only two leads, both RTD leads are in series with the sensor element, so significant errors can occur if the lead lengths exceed three feet of 20 AWG wire (approximately 0.05 °C/ft). For longer runs, attach a third or fourth lead as described above.

Sensor Lead Wire Resistance Effect– RTD Input

When using a 4-wire RTD, the effect of lead resistance is eliminated and has no impact on accuracy. However, a 3-wire sensor will not fully cancel lead resistance error because it cannot compensate for imbalances in resistance between the lead wires. Using the same type of wire on all three lead wires will make a 3-wire RTD installation as accurate as possible. A 2-wire sensor will produce the largest error because it directly adds the lead wire resistance to the sensor resistance. For 2- and 3-wire RTDs, an additional lead wire resistance error is induced with ambient temperature variations. The table and the examples shown below help quantify these errors.

Table 2-1. Examples of Approximate Basic Error

Sensor Input	Approximate Basic Error
4-wire RTD	None (independent of lead wire resistance)
3-wire RTD	± 1.0 Ω in reading per ohm of unbalanced lead wire resistance (Unbalanced lead wire resistance = maximum imbalance between any two leads.)
2-wire RTD	1.0 Ω in reading per ohm of lead wire resistance

Examples of Approximate Lead Wire Resistance Effect Calculations

Given:

Total cable length:	150 m
Imbalance of the lead wires at 20 °C:	1.5 Ω
Resistance/length (18 AWG Cu):	0.025 Ω/m °C
Temperature coefficient of Cu (α_{Cu}):	0.039 Ω/Ω °C
Temperature coefficient of Pt(α_{Pt}):	0.00385 Ω/Ω °C
Change in Ambient Temperature (ΔT_{amb}):	25 °C
RTD Resistance at 0 °C (R_o):	100 Ω (for Pt 100 RTD)

- Pt100 4-wire RTD: No lead wire resistance effect.
- Pt100 3-wire RTD:

$$\text{Basic Error} = \frac{\text{Imbalance of Lead Wires}}{(\alpha_{Pt} \times R_o)}$$

$$\text{Error due to amb. temp. variation} = \frac{(\alpha_{Cu}) \times (\Delta T_{amb}) \times (\text{Imbalance of Lead Wires})}{(\alpha_{Pt}) \times (R_o)}$$

Lead wire imbalance seen by the transmitter = 0.5 Ω

$$\text{Basic error} = \frac{0.5\ \Omega}{(0.00385\ \Omega / \Omega\ °C) \times (100\ \Omega)} = 1.3\ °C$$

Error due to amb. temp. var. of ± 25 °C

$$= \frac{(0.0039\ \Omega / \Omega\ °C) \times (25\ °C) \times (0.5\ \Omega)}{(0.00385\ \Omega / \Omega\ °C) \times (100\Omega)} = \pm 0.1266\,°C$$

- Pt100 2-wire RTD:

$$\text{Basic Error} = \frac{\text{Lead Wire Resistance}}{(\alpha_{Pt} \times R_o)}$$

$$\text{Error due to amb. temp. variation} = \frac{(\alpha_{Cu}) \times (\Delta T_{amb}) \times (\text{Lead Wire Resistance})}{(\alpha_{Pt}) \times (R_o)}$$

Lead wire resistance seen by the transmitter = 150 m × 2 wires × 0.025 Ω/m = 7.5 Ω

$$\text{Basic error} = \frac{7.5\ \Omega}{(0.00385\ \Omega / \Omega\ °C) \times (100\ \Omega)} = 19.5\ °C$$

Error due to amb. temp. var. of ± 25 °C

$$= \frac{(0.0039\ \Omega / \Omega\ °C) \times (25\ °C) \times (7.5\ \Omega)}{(0.00385\ \Omega / \Omega\ °C) \times (100\Omega)} = \pm 1.9\ °C$$

POWER SUPPLY

HART Installation

To communicate with a transmitter, a 18.1 VDC minimum power supply is required. The power supplied to the transmitter should not drop below the transmitter lift-off voltage (see Figure 2-10). If the power drops below the lift-off voltage while the transmitter is being configured, the transmitter may interpret the configuration information incorrectly.

The dc power supply should provide power with less than 2 percent ripple. The total resistance load is the sum of the resistance of the signal leads and the load resistance of any controller, indicator, or related pieces of equipment in the loop. Note that the resistance of intrinsic safety barriers, if used, must be included.

Figure 2-10. Load Limits

Maximum Load = 40.8 x (Supply Voltage – 12.0)

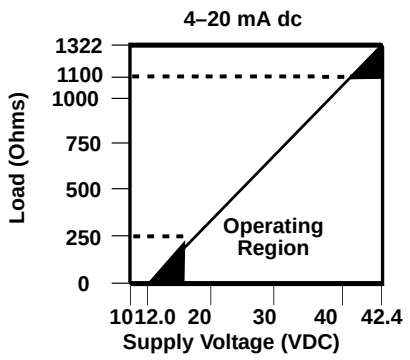

FOUNDATION fieldbus Installation

Powered over FOUNDATION fieldbus with standard fieldbus power supplies. The transmitter operates between 9.0 and 32.0 VDC, 11 mA maximum. Transmitter power terminals are rated to 42.4 VDC.

The power terminals on the 644 with FOUNDATION fieldbus are polarity insensitive.

Ground the Transmitter

The transmitter will operate with the current signal loop either floating or grounded. However, the extra noise in floating systems affects many types of readout devices. If the signal appears noisy or erratic, grounding the current signal loop at a single point may solve the problem. The best place to ground the loop is at the negative terminal of the power supply. Do not ground the current signal loop at more than one point.

The transmitter is electrically isolated to 500 V DC/AC rms (707 VDC), so the input circuit may also be grounded at any single point. When using a grounded thermocouple, the grounded junction serves as this point.

Neither side of the loop should be grounded on FOUNDATION fieldbus devices. Only the shield wire should be grounded.

NOTE
Do not ground the signal wire at both ends.

Ungrounded Thermocouple, mV, and RTD/Ohm Inputs

Each process installation has different requirements for grounding. Use the grounding options recommended by the facility for the specific sensor type, or begin with grounding Option 1 (the most common).

Option 1:

1. Connect signal wiring shield to the sensor wiring shield.
2. Ensure the two shields are tied together and electrically isolated from the transmitter housing.
3. Ground shield at the power supply end only.
4. Ensure that the sensor shield is electrically isolated from the surrounding grounded fixtures.

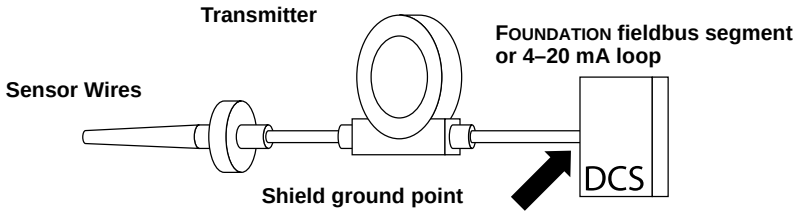

Connect shields together, electrically isolated from the transmitter.

Option 2:

1. Connect sensor wiring shield to the transmitter housing (only if the housing is grounded).
2. Ensure the sensor shield is electrically isolated from surrounding fixtures that may be grounded.
3. Ground signal wiring shield at the power supply end.

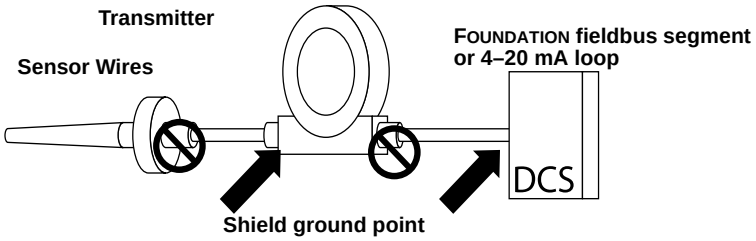

Option 3:

1. Ground sensor wiring shield at the sensor, if possible.
2. Ensure that the sensor wiring and signal wiring shields are electrically isolated from the transmitter housing.
3. Do not connect the signal wiring shield to the sensor wiring shield.
4. Ground signal wiring shield at the power supply end.

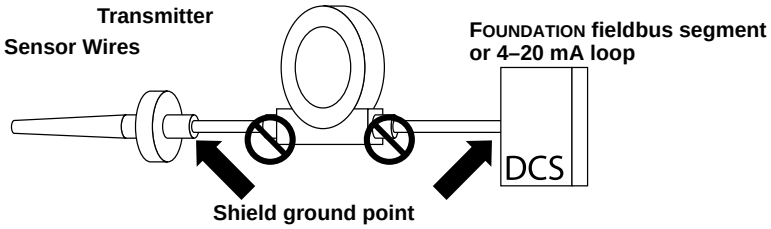

Grounded Thermocouple Inputs

1. Ground sensor wiring shield at the sensor.
2. Ensure that the sensor wiring and signal wiring shields are electrically isolated from the transmitter housing.
3. Do not connect the signal wiring shield to the sensor wiring shield.
4. Ground signal wiring shield at the power supply end.

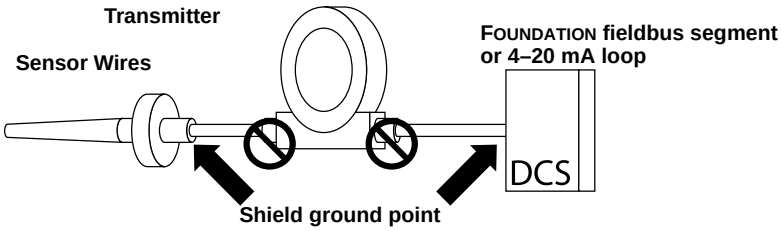

Section 3 HART Configuration

Overview . . . . . **page 3-1**
Safety Messages . . . . . **page 3-1**
Field Communicator . . . . . **page 3-3**
Configuration . . . . . **page 3-3**
Multidrop Communication . . . . . **page 3-18**
Operation and Maintenance . . . . . **page 3-19**

OVERVIEW

This section provides information on configuring, troubleshooting, operating, and maintaining the Rosemount 644 with HART protocol.

SAFETY MESSAGES

Instructions and procedures in this section may require special precautions to ensure the safety of the personnel performing the operations. Information that potentially raises safety issues is indicated by a warning symbol (⚠). Please refer to the following safety messages before performing an operation preceded by this symbol.

Warnings

⚠WARNING

Failure to follow these installation guidelines could result in death or serious injury.

- Make sure only qualified personnel perform the installation.

Explosions could result in death or serious injury.

- Do not remove the connection head cover in explosive atmospheres when the circuit is live.
- Before connecting a Field Communicator in an explosive atmosphere, make sure the instruments in the loop are installed in accordance with instrinsically safe or non-incendive field wiring practices.
- Verify that the operating atmosphere of the transmitter is consistent with the appropriate hazardous locations certifications.
- All connection head covers must be fully engaged to meet explosion-proof requirements.

Process leaks could result in death or serious injury.

- Do not remove the thermowell while in operation.
- Install and tighten thermowells and sensors before applying pressure

Electrical shock could cause death or serious injury.

- Use extreme caution when making contact with the leads and terminals.

Surges/Transients

The transmitter will withstand electrical transients of the energy level encountered in static discharges or induced switching transients. However, high-energy transients, such as those induced in wiring from nearby lightning strikes, welding, heavy electrical equipment, or switching gears, can damage both the transmitter and the sensor. To protect against high-energy transients, install the transmitter into a suitable connection head with the Rosemount 470 Transient Protector. Refer to the 470 Transient Protector Product Data Sheet (document number 00813-0100-4191) for more information.

COMMISSIONING

The 644 must be configured for certain basic variables to operate. In many cases, all of these variables are pre-configured at the factory. Configuration may be required if the transmitter is not configured or if the configuration variables need revision.

Commissioning consists of testing the transmitter and verifying transmitter configuration data. 644 transmitters can be commissioned either before or after installation. Commissioning the transmitter on the bench before installation using a Field Communicator or AMS ensures that all transmitter components are in working order.

⚠ To commission on the bench, connect the transmitter and the Field Communicator or AMS as shown in Figure 2-7 on page 2-10. Make sure the instruments in the loop are installed according to intrinsically-safe or non-incendive field wiring practices before connecting a communication in an explosive atmosphere. Connect HART Communication leads at any termination point in the signal loop. For convenience, connect them to the terminals labeled “COMM” on the terminal block. Connecting across the “TEST” terminals will prevent successful communication. Avoid exposing the transmitter electronics to the plant environment after installation by setting all transmitter jumpers during the commissioning stage on the bench.

When using a Field Communicator, any configuration changes made must be sent to the transmitter by using the “Send” key (F2). AMS configuration changes are implemented when the “Apply” button is clicked.

For more information on using the Field Communicator with the 644 transmitter, see Section 3: HART Configuration.

Setting the Loop to Manual

When sending or requesting data that would disrupt the loop or change the output of the transmitter, set the process application loop to manual. The Field Communicator or AMS will prompt you to set the loop to manual when necessary. Acknowledging this prompt does not set the loop to manual. The prompt is only a reminder; set the loop to manual as a separate operation.

Failure Mode

As part of normal operation, each transmitter continuously monitors its own performance. This automatic diagnostics routine is a timed series of checks repeated continuously. If diagnostics detect an input sensor failure or a failure in the transmitter electronics, the transmitter drives its output to low or high depending on the position of the failure mode switch. Saturation levels are 3.90 mA for standard configuration (3.8 mA if configured for NAMUR-compliant operation) on the low end and 20.5 mA for standard or NAMUR-compliant configuration on the high end, if the sensor temperature is outside of range limits. These values are also custom configurable by the factory or using the Field Communicator.

The values to which the transmitter drives its output in failure mode depend on whether it is configured to standard, NAMUR-compliant, or custom operation. See “Hardware and Software Failure Mode” on page A-7 for standard and NAMUR-compliant operation parameters.

Changing Switch Positions

To change the failure mode on the 644 transmitter, follow the steps below.

1. If applicable, remove the enclosure cover.
2. Locate the orange failure mode switch. On the 644H the switch is located near the power terminals and located in the center of the front panel on the 644 rail mount (see Figure 2-6).
3. Move the switch to the desired alarm setting. To set the failure mode to high alarm, position the switch toward the “HI” mark on the terminal block. To set the failure mode to low alarm, position the switch in the opposite direction.
4. Replace the enclosure cover (if applicable). Enclosure covers must be fully engaged to meet explosion-proof requirements.

FIELD COMMUNICATOR

The Field Communicator exchanges information with the transmitter from the control room, the instrument site, or any wiring termination point in the loop. To facilitate communication, connect the Field Communicator in parallel with the transmitter (see Figure 2-11). Use the loop connection ports on the rear panel of the Field Communicator. The connections are non-polarized. Do not make connections to the serial port or the NiCad recharger jack in explosive atmospheres. Before connecting the Field Communicator in an explosive atmosphere, make sure the instruments in the loop are installed in accordance with intrinsically safe or non-incendive field wiring practices.

For more information regarding the Field Communicator, please see the Field Communicator Reference Manual.

CONFIGURATION

The 644 transmitter can be configured either on-line or off-line using a Field Communicator or AMS. During on-line configuration, the transmitter is connected to a Field communicator. Data is entered in the working register of the communicator and sent directly to the transmitter. Off-line configuration consists of storing configuration data in a Field Communicator while it is not connected to a transmitter. Data is stored in nonvolatile memory and can be downloaded to the transmitter at a later time.

HART

HART Menu Tree

Options listed in bold type indicate that a selection provides other options. For ease of operation, changing calibration and setup, such as sensor type, number of wires, and range values, can be completed in several locations.

Figure 3-1. Field Communicator Menu Tree

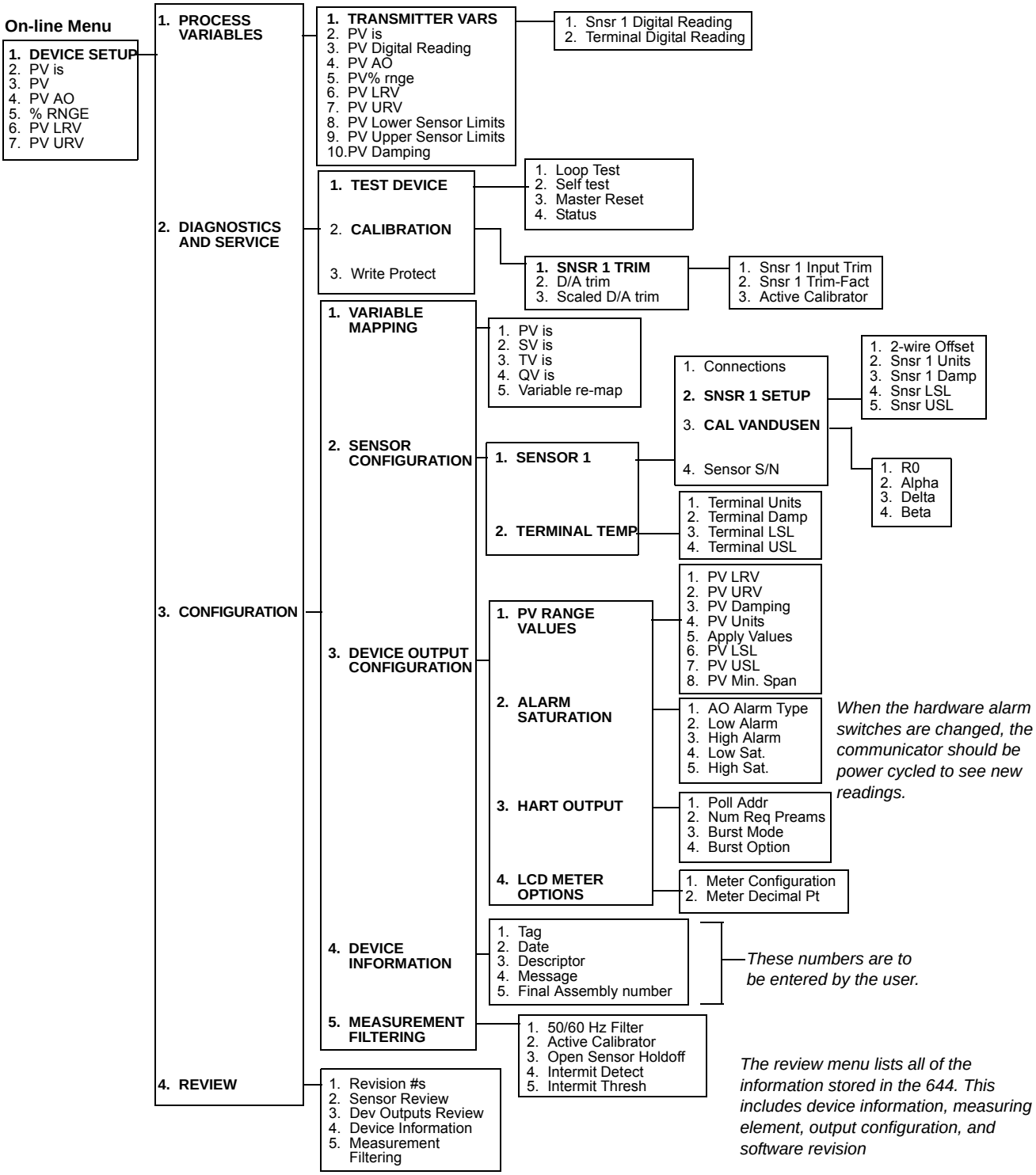

Fast Key Sequence

Table 3-1 lists the fast key sequences for common transmitter functions.

NOTE:
The fast key sequences assume that DD Dev v6, DD v1 is being used. Some features apply only to the 644H, as noted in the following pages. Table 3-1 provides alphabetical function lists for all Field Communicator tasks as well as their corresponding fast key sequences.

Table 3-1. 644 Fast Key Sequence

Function	Fast Keys		Function	Fast Key
Active Calibrator	1, 2, 2, 1, 3		Num Req Preams	1, 3, 3, 3, 2
Alarm/Saturation	1, 3, 3, 2		Open Sensor Holdoff	1, 3, 5, 3
AO Alarm Type	1, 3, 3, 2, 1		Percent Range	1, 1, 5
Burst Mode	1, 3, 3, 3, 3		Poll Address	1, 3, 3, 3, 1
Burst Option	1, 3, 3, 3, 4		Process Temperature	1, 1
Calibration	1, 2, 2		Process Variables	1, 1
Callendar-Van Dusen	1, 3, 2, 1		PV Damping	1, 3, 3, 1, 3
Configuration	1, 3		PV Unit	1, 3, 3, 1, 4
D/A Trim	1, 2, 2, 2		Range Values	1, 3, 3, 1
Damping Values	1, 1, 10		Review	1, 4
Date	1, 3, 4, 2		Scaled D/A Trim	1, 2, 2, 3
Descriptor	1, 3, 4, 3		Sensor Connection	1, 3, 2, 1, 1
Device Info	1, 3, 4		Sensor 1 Setup	1, 3, 2, 1, 2
Device Output Configuration	1, 3, 3		Sensor Serial Number	1, 3, 2, 1, 4
Diagnostics and Service	1, 2		Sensor 1 Trim	1, 2, 2, 1
Filter 50/60 Hz	1, 3, 5, 1		Sensor 1 Trim-Factory	1, 2, 2, 1, 2
Hardware Rev	1, 4, 1		Sensor Type	1, 3, 2, 1, 1
Hart Output	1, 3, 3, 3		Software Revision	1, 4, 1
Intermittent Detect	1, 3, 5, 4		Status	1, 2, 1, 4
LCD Display Options	1, 3, 3, 4		Tag	1, 3, 4, 1
Loop Test	1, 2, 1, 1		Terminal Temperature	1, 3, 2, 2,
LRV (Lower Range Value)	1, 1, 6		Test Device	1, 2, 1
LSL (Lower Sensor Limit)	1, 1, 8		URV (Upper Range Value)	1, 1, 7
Measurement Filtering	1, 3, 5		USL (Upper Sensor Limit)	1, 1, 9
Message	1, 3, 4, 4		Variable Mapping	1, 3, 1
Meter Configuring	1, 3, 3, 4, 1		Variable Re-Map	1, 3, 1, 5
Meter Decimal Point	1, 3, 3, 4, 2		Write Protect	1, 2, 3
			2-Wire Offset	1, 3, 2, 1, 2, 1

HART

AMS

One of the key benefits of intelligent devices is the ease of device configuration. When used with AMS, the 644 is easy to configure and provides instant and accurate alerts and alarms. The main configuration screen of the 644 is the “Configuration Properties” screen. From this screen, the transmitter set-up can easily be viewed and edited.

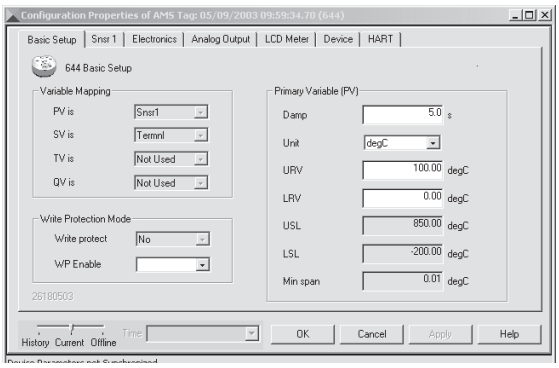

The screens use a color-coding to give visual indication of the transmitter health and to indicate any changes that may need to be made or written to the transmitter.

- Gray screens: indicates that all information has been written to the transmitter
- Yellow on screen: changes have been made in the software but not sent to the transmitter
- Green on screen: all current changes on screen have been written to the transmitter
- Red on screen: indicates an alarm or alert that requires immediate investigation

Apply AMS Changes

Changes made in the software must be *sent* to the transmitter in order for the changes to take effect in the process.

1. From the bottom of the “Configuration Properties” screen, click **Apply**.
2. An “Apply Parameter Modification” screen appears, enter desired information and click **OK**.
3. After carefully reading the warning provided, select **OK**.

Review Configuration Data

Before operating the 644 in an actual installation, review all of the factory-set configuration data to ensure that it reflects the current application.

Review

Fast Key Sequence	1, 4

When activating the *Review* function, scroll through the configuration data list to check each process variable. If changes to the transmitter configuration data are necessary, refer to “Configuration” below.

AMS
Right click on the device and select “Configuration Properties” from the menu. Select the tabs to review the transmitter configuration data.

Check Output

Before performing other transmitter on-line operations, review the 644 digital output parameters to ensure that the transmitter is operating properly.

Process Variables

Fast Key Sequence	1, 1

The *Process Variables* menu displays process variables, including sensor temperature, percent of range, analog output, and terminal temperature. These process variables are continuously updated. The primary variable is the 4 –20 mA analog signal. The secondary variable is the transmitter terminal temperature.

AMS
Right click on the device and select “Configuration Properties” from the menu. Select the Analog Output tab to review the transmitter Analog Output Range.

Configuration

The 644 must be configured for certain basic variables in order to be operational. In many cases, all of these variables are pre-configured at the factory. Configuration may be required if the transmitter is not configured or if the configuration variables need revision.

Variable Mapping

Fast Key Sequence	1, 3, 1

The *Variable Mapping* menu displays the sequence of the process variables. When using the 644H you can select *5 Variable Re-Map* to change this configuration. When the *Select PV* screen appears *Snsr 1* must be selected. Either *Sensor 1*, *Terminal Temperature*, or *not used* can be selected for the remaining variables. The primary variable is the 4–20 mA analog signal.

AMS
Right click on the device and select “Configuration Properties” from the menu. Select the Analog Output tab to review the Mapped Variable Output.

Apply changes made (see “Apply AMS Changes” on page 3-6).

Select Sensor Type

Fast Key Sequence	1, 3, 2, 1, 1

The *Connections* command allows selection of the sensor type and the number of sensor wires to be connected. Select from the following sensors:

- 2-, 3-, or 4-wire Pt 100, Pt 200, Pt 500, Pt 1000 RTDs: α = 0.00385 $\Omega/\Omega/°C$
- 2-, 3-, or 4-wire Pt 100: α = 0.003916 $\Omega/\Omega/°C$
- 2-, 3-, or 4-wire Ni 120 nickel RTDs
- 2-, 3-, or 4-wire Cu 10 RTDs
- IEC/NIST/DIN Type B, E, J, K, R, S, T thermocouples
- DIN type L, U thermocouples
- ASTM Type W5Re/W26Re thermocouple
- –10 to 100 millivolts
- 2-, 3-, or 4-wire 0 to 2000 ohms

Contact a Emerson Process Management representative for information on the temperature sensors, thermowells, and accessory mounting hardware that is available through Emerson Process Management.

AMS
Right click on the device and select “Sensor Connections,” then select “Sensor 1 Config.“Select “Sensor Connections.” The *wizard* will walk through the screens.

Sensor Serial Number

Fast Key Sequence	1, 3, 2, 1, 4

The *Sensor S/N* variable provides a location to list the serial number of the attached sensor. It is useful for identifying sensors and tracking sensor calibration information.

AMS
Right click on the device and select “Configuration Properties” from the menu. Select the Snsr 1 tab to configure the Snsr S/N.

Apply changes made (see “Apply AMS Changes” on page 3-6).

Set Output Units

Fast Key Sequence	1, 3, 2, 1, 2, 2

The *Set Output Unit* command sets the desired primary variable units. Set the transmitter output to one of the following engineering units:

- Degrees Celsius
- Degrees Fahrenheit
- Degrees Rankine
- Kelvin
- Ohms
- Millivolts

AMS
Right click on the device and select “Configuration Properties” from the menu. Select the Snsr 1 tab to configure the Sensor Output Units. Set the units to the desired output.

Apply changes made (see “Apply AMS Changes” on page 3-6).

50/60 Hz Filter

Fast Key Sequence	1, 3, 5, 1

The *50/60 Hz Filter* command sets the transmitter electronic filter to reject the frequency of the AC power supply in the plant.

AMS
Right click on the device and select “Configuration Properties” from the menu. Select the Electronics tab to configure the output frequency.

Apply changes made (see “Apply AMS Changes” on page 3-6).

Terminal Temperature

Fast Key Sequence	1, 3, 2, 2

The *Terminal Temp* command sets the terminal temperature units to indicate the temperature at the transmitter terminals.

AMS
Right click on the device and select “Configuration Properties” from the menu. Select the Electronics tab to configure the Terminal Temperature. In the Terminal Temperature box, set the Terminal Units to the desired output.

Apply changes made (see “Apply AMS Changes” on page 3-6).

LCD Meter Options (644H Only)

Fast Key Sequence	1, 3, 3, 4

The *LCD Meter Option* command sets the meter options, including engineering units and decimal point. Change the meter settings to reflect necessary configuration parameters when adding a meter or reconfiguring the transmitter.

To customize variables that the meter displays, follow the steps below:

1. From the home screen select *1 Device Setup*, *3 Configuration*, *3 Dev Output Config*, *4 LCD Meter Options*, and *1 Meter Config*.
2. Use the F2 key to turn each of the following options **OFF** or **ON**: Sensor 1, Terminal Temp, Percent Of Range, Analog Output. As many outputs as desired an be turned **ON** at once.
3. Press F4, **ENTER**, and then F2, **SEND**, to send the information to the transmitter. The LCD display will scroll through the outputs selected in step 2.

To change the decimal point configuration, perform the following steps:

1. From the home screen select *1 Device Setup*, *3 Configuration*, *3 Dev Output Config*, *4 LCD Meter Options*, and *1 Meter Decimal Pt*.
2. Choose from *Floating Precision* or *One-*, *Two-*, *Three-*, or *Four-Digit Precision* by pressing F4, **ENTER**. Press F2 to send the information to the transmitter.

AMS
Right click on the device and select “Configuration Properties” from the menu. Select the Device tab to configure the LCD. From the LCD Meter box, define the Meter Config, Meter Decimal Pt.

Apply changes made (see “Apply AMS Changes” on page 3-6).

Process Variable (PV) Damping

Fast Key Sequence	1, 3, 3, 1, 3

The *PV Damp* command changes the response time of the transmitter to smooth variations in output readings caused by rapid changes in input. Determine the appropriate damping setting based on the necessary response time, signal stability, and other requirements of the loop dynamics of the system. The default damping value is 5.0 seconds and can be reset to any value between 0 and 32 seconds.

The value chosen for damping affects the response time of the transmitter. When set to zero (or disabled), the damping function is off and the transmitter output reacts to changes in input as quickly as the intermittent sensor algorithm allows (refer to “Intermittent Threshold” on page 3-16 for a description of the intermittent sensor algorithm). Increasing the damping value increases the transmitter response time.

With damping enabled, if the temperature change is within 0.2% of the sensor limits, the transmitter measures the change in input every 500 milliseconds and outputs values according to the following relationship:

$$\text{Damped Value} = (N - P) \times \left(\frac{2T - U}{2T + U}\right) + P$$

P =previous damped value

N =new sensor value

T = damping time constant

At the value to which the damping time constant is set, the transmitter output is at 63% of the input change and it continues to approach the input according to the damping equation above.

For example, as illustrated in Figure 3-2, if the temperature undergoes a step change—within 0.2% of the sensor limits—from 100 degrees to 110 degrees, and the damping is set to 5.0 seconds, the transmitter calculates and reports a new reading every 500 milliseconds using the damping equation. At 5.0 seconds, the transmitter outputs 106.3 degrees, or 63% of the input change, and the output continues to approach the input curve according to the equation above.

For information regarding the damping function when the input change is greater than 0.2% of the sensor limits, refer to “Intermittent Threshold” on page 3-16.

Figure 3-2. Change in Input vs. Change in Output with Damping Set to Five Seconds

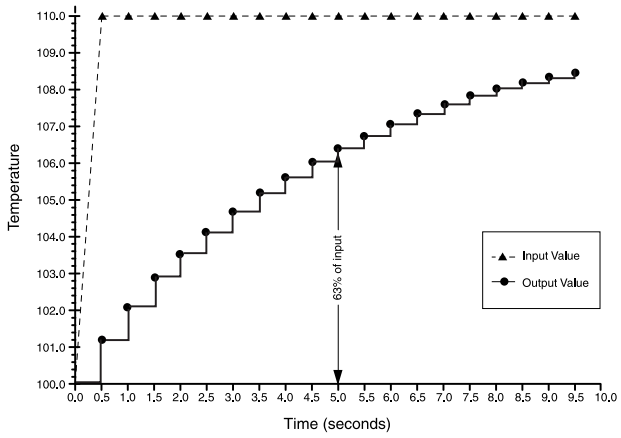

AMS
Right click on the device and select “Configuration Properties” from the menu. Select the Snsr 1 tab and apply damping requirements.

Apply changes made (see “Apply AMS Changes” on page 3-6).

2-Wire RTD Offset

Fast Key Sequence	1, 3, 2, 1, 2, 1

The *2-Wire RTD Offset* command allows the user to input the measured lead wire resistance, which will result in the transmitter adjusting its temperature measurement to correct the error caused by this resistance. Due to a lack of lead wire compensation within the RTD, temperature measurement made with a 2-wire RTD are often inaccurate. See “Sensor Lead Wire Resistance Effect– RTD Input” on page 2-11 for more information.

To utilize this feature perform the following steps:

1. Measure the lead wire resistance of both RTD leads after installing the 2-wire RTD and the 644H.
2. From the HOME screen, select 1 *Device Setup*, *3 Configuration*, *2 Sensor Configuration, 1 Sensor 1, 2 Snsr 1 Setup,* and *1 2-Wire Offset*.
3. Enter the total measured resistance of the two RTD leads at the *2-Wire Offset* prompt. Enter this resistance as a negative (–) value to ensure proper adjustment.The transmitter then adjusts its temperature measurement to correct the error caused by lead wire resistance.

AMS
Right click on the device and select “Configuration Properties” from the menu. Select the Snsr 1 tab to configure the 2 Wire Offset.

Apply changes made (see “Apply AMS Changes” on page 3-6).

Information Variables

Access the transmitter information variables on-line using the Field Communicator or other suitable communications device. The following is a list of transmitter information variables. These variables include device identifiers, factory-set configuration variables, and other information. A description of each variable, the corresponding fast key sequence, and a review of its purposes are provided.

Tag

Fast Key Sequence	1, 3, 4, 1

The *Tag* variable is the easiest way to identify and distinguish between transmitters in multi-transmitter environments. Use it to label transmitters electronically according to the requirements of the application. The tag defined is automatically displayed when a Field Communicator establishes contact with the transmitter at power-up. The tag may be up to eight characters long and has no impact on the primary variable readings of the transmitter.

Date

Fast Key Sequence	1, 3, 4, 2

The *Date* command is a user-defined variable that provides a place to save the date of the last revision of configuration information. It has no impact on the operation of the transmitter or the Field Communicator.

Descriptor

Fast Key Sequence	1, 3, 4, 3

The *Descriptor* variable provides a longer user-defined electronic label to assist with more specific transmitter identification than is available with the tag variable. The descriptor may be up to 16 characters long and has no impact on the operation of the transmitter or the Field Communicator.

Message

Fast Key Sequence	1, 3, 4, 4

The *Message* variable provides the most specific user-defined means for identifying individual transmitters in multi-transmitter environments. It allows for 32 characters of information and is stored with the other configuration data. The message variable has no impact on the operation of the transmitter or the Field Communicator.

AMS
Right click on the device and select “Configuration Properties” from the menu. Select the Device tab to enter alphanumeric device information.

Apply changes made (see “Apply AMS Changes” on page 3-6).

Diagnostics and Service

Test Device

Fast Key Sequence	1, 2, 1

The *Test Device* command initiates a more extensive diagnostics routine than that performed continuously by the transmitter. The *Test Device* menu lists the following options:

- *1 Loop test* verifies the output of the transmitter, the integrity of the loop, and the operations of any recorders or similar devices installed in the loop. See “Loop Test” below for more information.
- *2 Self Test* initiates a transmitter self test. Error codes are displayed if there is a problem.
- *3 Master Reset* sends out a command that restarts and tests the transmitter. A master reset is like briefly powering down the transmitter. Configuration data remains unchanged after a master reset.
- *4 Status* lists error codes. **ON** indicates a problem, and **OFF** means there are no problems.

Loop Test

Fast Key Sequence	1, 2, 1, 1

The *Loop Test* command verifies the output of the transmitter, the integrity of the loop, and the operations of any recorders or similar devices installed in the loop. To initiate a loop test, perform the following procedure:

1. Connect a reference meter to the transmitter. To do so, shunt the transmitter power through the meter at some point in the loop.
2. 644H: From the **HOME** screen, select *1 Device Setup*, *2 Diag/Serv*, *1 Test Device*, *1 Loop Test* before performing a loop test.
   644 rail mount, select *1 Device Setup*, *2 Diagnostics and Service, 2 Loop Test*. Select **OK** after setting the control loop to manual. The communicator displays the loop test menu.
3. Select a discreet milliampere level for the transmitter to output. At the **CHOOSE ANALOG OUTPUT** prompt, select *1 4mA*, *2 20mA*, or select *3 other* to manually input a value between 4 and 20 mA.
4. Check the current meter installed in the test loop to verify that it reads the value that was commanded to output. If the readings do not match, either the transmitter requires an output trim or the current meter is malfunctioning.

After completing the test procedure, the display returns to the loop test screen and another output value can be chosen.

AMS

Right click and select “Diagnostics and Test.” Select “Loop Test.” The *loop test wizard* will walk through the process to fix the output for the sensor.

The transmitter must be returned to normal conditions (turn off loop test) before placing back in process

Right click and select “Diagnostics and Test.” Select “Loop Test.” The *loop test wizard* will walk through the process to fix the analog output. From the *loop test wizard* screen choose “END.” A message will appear indicating that it is OK to return to normal.

Master Reset

Fast Key Sequence	1, 2, 1, 3

Master Reset resets the electronics without actually powering down the unit. It does not return the transmitter to the original factory configuration.

AMS
Right click on the device and select “Diagnostics and Test” from the menu. Choose “Master Reset.”

The *wizard* will perform the reset.

Active Calibrator

Fast Key Sequence	1, 2, 2, 1, 3

The *Active Calibrator Mode* command enables or disables the pulsating current feature. The transmitter ordinarily operates with pulsating current so that sensor diagnostic functions, such as open sensor detection and EMF compensation, can be performed correctly. Some calibration equipment requires steady current to function properly. By enabling the Active Calibrator Mode the transmitter stops sending pulsating current to the sensor and supples a steady current. Disabling the Active Calibrator returns the transmitter to its normal operating state of sending a pulsating current to the sensor, thus enabling the sensor diagnostic functions.

The Active Calibrator Mode is volatile and will be automatically disabled when power is cycled or when a Master Reset is performed using the Field Communicator.

NOTE
The Active Calibrator Mode must be disabled before returning the transmitter to the process. This will ensure that the full diagnostic capabilities of the 644 are available.

Disabling or enabling the Active Calibrator Mode will not change any of the sensor trim values stored in the transmitter.

Sensor Review

Fast Key Sequence	1, 4, 2

The *Signal Condition* command allows viewing or changing the primary variable lower and upper range values, sensor percent of range, and sensor damping.

AMS
Right click on the device and select “Configuration Properties” from the menu. Select the Snsr 1 tab and review sensor configuration.

Apply changes made (see “Apply AMS Changes” on page 3-6).

Write Protect

Fast Key Sequence	1, 2, 3

The *Write Protect* command allows you to protect the transmitter configuration data from accidental or unwarranted changes. To enable the write protect feature, perform the following procedure:

1. From the **HOME** screen select *1 Device Setup*, *2 Diag/Service*, *3 Write Protect.*
2. Select *Enable WP.*

NOTE
To disable write protect on the 644, repeat the procedure, replacing *Enable WP* with *Disable WP*.

AMS
Right click on the device and select “Configuration Properties” from the menu. Select the Basic Setup tab and enable WP.

Apply changes made (see “Apply AMS Changes” on page 3-6).

HART Output

Fast Key Sequence	1, 3, 3, 3

The *HART Output* command allows the user to make changes to the multidrop address, specify the number of requested preambles, initiate burst mode, or make changes to the burst options.

AMS
Right click on the device and select “Configuration Properties” from the menu. Select the HART tab to configure HART multidrop addressing.

Apply changes made (see “Apply AMS Changes” on page 3-6).

Alarm and Saturation

Fast Key Sequence	1, 3, 3, 2

The *Alarm/Saturation* command allows the alarm settings (Hi or Low) and saturation values to be viewed and changed. To change the alarm values and saturation values, select the value to be changed, either *2 Low Alarm*, *3 High Alarm*, *4 Low Sat.*, or *5 High Sat*. Enter the desired new value, which must fall within the guidelines given below.

- The low alarm value must be between 3.30 and 3.75 mA
- The high alarm value must be between 21.0 and 23.0 mA
- The low saturation level must be between the low alarm value plus 0.1 mA and 3.9 mA.

Example: The low alarm value has been set to 3.7 mA. Therefore, the low saturation level, S, must be $3.8 \leq S \leq 3.9$ mA.

- The high saturation level must be between 20.5 mA and the high alarm value minus 0.1 mA.

Example: The high alarm value has been set to 20.8 mA. Therefore, the low saturation level, S, must be $20.5 \leq S \leq 20.7$ mA.

AMS
For AMS, configure the sensor as indicated above.

Right click on the device and select “Configuration Properties” from the menu. Select the Analog Output tab to define the alarm and saturation levels. From the Alarm box, enter the low and high alarm and the low and high saturation.

Apply changes made (see “Apply AMS Changes” on page 3-6).

Rerange

Reranging the transmitter sets the measurement range to the limits of expected readings. Setting the measurement range to the limits of expected readings maximizes transmitter performance; the transmitter is most accurate when operated within the expected temperature range for your application.

PV Range Values

Fast Key Sequence	1, 3, 3, 1

The *PV URV* and *PV LRV* commands, found in the *PV Range Values* menu screen, allow the user to set the transmitter’s lower and upper range values using limits of expected readings. The range of expected readings is defined by the Lower Range Value (LRV) and Upper Range Value (URV). The transmitter range values can be reset as often as necessary to reflect changing process conditions. From the *PV Range Values* screen select *1 PV LRV* to change the lower range value and *2 PV URV* to change the upper range value.

NOTE:
The rerange functions should not be confused with the trim functions. Although the rerange command matches a sensor input to a 4–20 mA output, as in conventional calibration, it does not affect the transmitter’s interpretation of the input.

AMS
Right click on the device and select “Configuration Properties” from the menu. Select the Basic Setup tab and set the URV and LRV.

Apply changes made (see “Apply AMS Changes” on page 3-6).

Intermittent Threshold

Fast Key Sequence	1, 3, 5, 4

The threshold value can be changed from the default value of 2%. Turning the Intermittent Sensor Detect feature **OFF** or leaving it **ON** and increasing the threshold value above the default does not affect the time needed for the transmitter to output the correct alarm signal after detecting a true open sensor condition. However, the transmitter may briefly output a false temperature reading for up to one update in either direction (see Figure 3-4 on page 3-18) up to the threshold value (100% of sensor limits if Intermittent Sensor Detect is **OFF)**. Unless rapid response rate is necessary, the suggested setting of the Intermittent Sensor Detect mechanism is **ON** with 2% threshold.

Figure 3-3. Open Sensor Response

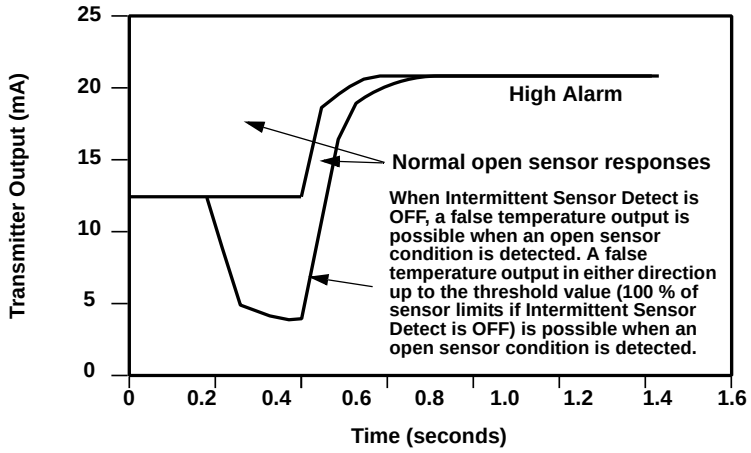

Intermittent Sensor Detect (Advanced Feature)

The Intermittent Sensor Detect feature is designed to guard against process temperature readings caused by intermittent open sensor conditions (an *intermittent* sensor condition is an open sensor condition that lasts less than one update). By default, the transmitter is shipped with the Intermittent Sensor Detect feature switched **ON** and the threshold value set at 2% of sensor limits. The Intermittent Sensor Detect feature can be switched **ON** or **OFF** and the threshold value can be changed to any value between 0 and 100% of the sensor limits with a Field Communicator.

Transmitter Behavior with Intermittent Sensor Detect ON

When the Intermittent Sensor Detect feature is switched **ON**, the transmitter can eliminate the output pulse caused by intermittent open sensor conditions. Process temperature changes (ΔT) within the threshold value will be tracked normally by the transmitter's output. A ΔT greater than the threshold value will activate the intermittent sensor algorithm. True open sensor conditions will cause the transmitter to go into alarm.

The threshold value of the 644 should be set at a level that allows the normal range of process temperature fluctuations; too high and the algorithm will not be able to filter out intermittent conditions; too low and the algorithm will be activated unnecessarily. The default threshold value is 2% of the sensor limits.

Transmitter Behavior with Intermittent Sensor Detect OFF

When the Intermittent Sensor Detect feature is switched **OFF**, the transmitter tracks all process temperature changes, even if they are the consequence of an intermittent sensor. (The transmitter in effect behaves as though the threshold value had been set at 100%.) The output delay due to the intermittent sensor algorithm will be eliminated.

AMS
Right click on the device and select "Configuration Properties" from the menu. Select the Electronics tab. From the Measurement Filtering Box, configure the Intermit threshold.

Apply changes made (see "Apply AMS Changes" on page 3-6).

Open Sensor Holdoff

Fast Key Sequence	1, 3, 5, 3

The *Open Sensor Holdoff* option, at the normal setting, enables the 644 to be more robust under heavy EMI conditions. This is accomplished through the software by having the transmitter perform additional verification of the open sensor status prior to activating the transmitter alarm. If the additional verification shows that the open sensor condition is not valid, the transmitter will not go into alarm.

For users of the 644 that desire a more vigorous open sensor detection, the Open Sensor Holdoff option can be changed to a fast setting. With this setting, the transmitter will report an open sensor condition without additional verification of the open condition.

AMS
Right click on the device and select “Configuration Properties” from the menu. Select the Electronics tab. From the Measurement Filtering Box box, configure the Open Snsr Holdoff.

Apply changes made (see “Apply AMS Changes” on page 3-6).

MULTIDROP COMMUNICATION

Multidropping refers to the connection of several transmitters to a single communications transmission line. Communication between the host and the transmitters takes place digitally with the analog output of the transmitters deactivated.

Many Rosemount transmitters can be multidropped. With the HART communications protocol, up to 15 transmitters can be connected on a single twisted pair of wires or over leased phone lines.

A Field Communicator can test, configure, and format a multidropped 644 transmitter in the same way as in a standard point-to-point installation.

The application of a multidrop installation requires consideration of the update rate necessary from each transmitter, the combination of transmitter models, and the length of the transmission line. Each transmitter is identified by a unique address (1–15) and responds to the commands defined in the HART protocol.

Figure 3-4. Typical Multidropped Network

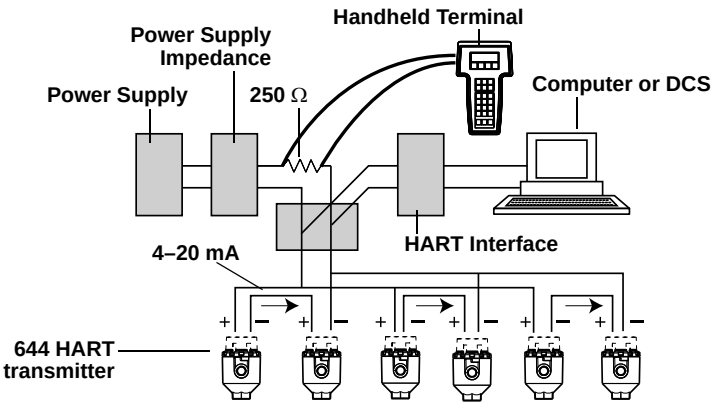

Figure 3-4 shows a typical multidrop network. Do not use this figure as an installation diagram. Contact Emerson Process Management product support with specific requirements for multidrop applications.

NOTE
644 transmitters are set to address 0 at the factory, allowing them to operate in the standard point-to-point manner with a 4–20 mA output signal. To activate multidrop communication, the transmitter address must be changed to a number between 1 and 15. This change deactivates the 4–20 mA analog output, sending it to 4 mA. The failure mode current also is disabled.

AMS
Right click and select “Configuration Properties” from the menu screen. Select the “HART” tab. From here, assign the polling address.

OPERATION AND MAINTENANCE

Calibration

Calibrating the transmitter increases the measurement precision by allowing corrections to be made to the factory-stored characterization curve by digitally altering the transmitter’s interpretation of the sensor input.

To understand calibration, it is necessary to understand that smart transmitters operate differently from analog transmitters. An important difference is that smart transmitters are factory-characterized, meaning that they are shipped with a standard sensor curve stored in the transmitter firmware. In operation, the transmitter uses this information to produce a process variable output, in engineering units, dependent on the sensor input.

Calibration of the 644 may include the following procedures:

- Sensor Input Trim: digitally alter the transmitter’s interpretation of the input signal
- Transmitter Sensor Matching: generates a special custom curve to match that specific sensor curve, as derived from the Callendar-Van Dusen constants
- Output Trim: calibrates the transmitter to a 4–20 mA reference scale
- Scaled Output Trim: calibrates the transmitter to a user-selectable reference scale.

Trim the Transmitter

One or more of the trim functions may be used when calibrating. The trim functions are as follows

- Sensor Input Trim
- Transmitter Sensor Matching
- Output Trim
- Output Scaled Trim

Sensor Input Trim

Fast Key Sequence	1, 2, 2, 1, 1

Perform a sensor trim if the transmitters digital value for the primary variable does not match the plant's standard calibration equipment. The sensor trim function calibrates the sensor to the transmitter in temperature units or raw units. Unless your site-standard input source is NIST-traceable, the trim functions will not maintain the NIST-traceability of the system.

The *Sensor Input Trim* command allows the transmitter's interpretation of the input signal to be digitally altered (see Figure 3-5). The sensor reference command trims, in engineering (F, °C, °R, K) or raw (Ω, mV) units, the combined sensor and transmitter system to a site standard using a known temperature source. Sensor trimming is suitable for validation procedures or for applications that require calibrating the sensor and transmitter together.

Use the following procedure to perform a sensor trim with a 644H.

1. Connect the calibration device or sensor to the transmitter. Refer to Figure 2-9 on page 2-11 or inside of the transmitter terminal side cover for sensor wiring diagrams. (If using an active calibrator, please see "Active Calibrator" on page 3-14)
2. Connect the communicator to the transmitter loop.
3. From the Home screen, select *1 Device Setup*, *2 Diag/Service*, *2 Calibration*, *1 Sensor 1 Trim*, *1 Sensor 1 Input Trim* to prepare to trim the sensor.
4. Set the control loop to manual and select **OK**.
5. Select the appropriate sensor trim units at the **ENTER SNSR 1 TRIM UNITS** prompt.
6. Select *1 Lower Only* or *2 Lower and Upper* at the **SELECT SENSOR TRIM POINTS** prompt.
7. Adjust the calibration device to the desired trim value (must be within the selected sensor limits). If a combined sensor and transmitter system are being trimmed, expose the sensor to a known temperature and allow the temperature reading to stabilize. Use a bath, furnace or isothermal block, measured with a site-standard thermometer, as the known temperature source.
8. Select **OK** once the temperature stabilizes. The communicator displays the output value the transmitter associates with the input value provided by the calibration device.
9. Enter the lower or upper trim point, depending on the selection in Step 6.

AMS
For AMS, configure the sensor as indicated above.

Right click on the device and select "Calibrate" from the menu. Select "Sensor 1 Trim," then "Sensor Input Trim."

The *wizard* will continue through the process.

The transmitter may be restored to the factory default by selecting: "Calibration," "Sensor 1 Trim," "Revert to Factory Trim."

The *wizard* will recall the factory trim for a given sensor

Apply changes made (see “AMS” on page 3-5).

Transmitter-Sensor Matching
Perform the *Transmitter Sensor Matching* procedure to enhance the temperature measurement accuracy of the system (see the comparison below) and if you have a sensor with Callendar-Van Dusen constants. When ordered from Emerson Process Management, sensors with Callendar-Van Dusen constants are NIST-traceable.

The 644 accepts Callendar-Van Dusen constants from a calibrated RTD schedule and generates the actual curve to match that specific sensor curve.

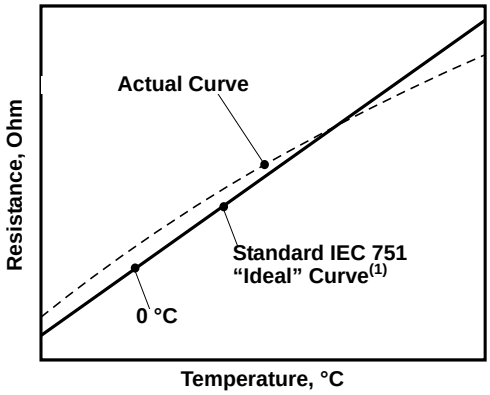

(1) The Actual Curve is identified from the Callendar-Van Dusen equation.

System Accuracy Comparison at 150 °C Using a PT 100 (α=0.00385) RTD with a Span of 0 to 200 °C			
Standard RTD		Matched RTD	
644H	±0.15 °C	644H	±0.15 °C
Standard RTD	±1.05 °C	Matched RTD	±0.18 °C
Total System(1)	±1.06 °C	Total System(1)	±0.23 °C

(1) Calculated using root-summed-squared (RSS) statistical method

$$\text{TotalSystemAccuracy} = \sqrt{(\text{TransmitterAccuracy})^2 + (\text{SensorAccuracy})^2}$$

Callendar-Van Dusen equation:

$$R_t = R_o + R_o\alpha\,[t - \delta(0.01t-1)(0.01t) - \beta(0.01t - 1)(0.01t)^3]$$

The following input variables, included with specially-ordered Rosemount temperature sensors, are required:

R_0 = Resistance at Ice Point
Alpha = Sensor Specific Constant
Beta = Sensor Specific Constant
Delta = Sensor Specific Constant

To input Callendar-Van Dusen constants, perform the following procedure:

1. From the **HOME** screen, select *1 Device Setup*, *3 Configuration*, *2 Sensor Config*, *1 Chng Type/Conn*, *1 Sensor 1* or *2 Sensor 2.* Set the control loop to manual and select **OK**.
2. Select *Cal VanDusen* at the **ENTER SENSOR TYPE** prompt.
3. Select the appropriate number of wires at the **ENTER SENSOR CONNECTION** prompt.
4. Enter the R_o, Alpha, Delta, and Beta values from the stainless steel tag attached to the special-order sensor when prompted.
5. Return the control loop to automatic control and select **OK**.

To disable the transmitter-sensor matching feature from the **HOME** screen select *1 Device Setup*, *3 Configuration*, *2 Sensor Confi*g, *1 Chng Type/Conn*, *1 Sensor 1* or *2 Sensor 2*. Choose the appropriate sensor type from the **ENTER SENSOR TYPE** prompt.

NOTE
When the transmitter-sensor matching is disabled, the transmitter reverts to either user or factory trim, whichever was used previously. Make certain the transmitter engineering units default correctly before placing the transmitter into service.

AMS
Right click on the device and select “Sensor Connections” from the menu. Select the “Sensor 1 Config.” Select “Sensor Connections.”

The *wizard* will go through the required changes.

NOTE
Under “Enter Sensor Type” select “Cal VanDusen.

Output Trim or Scaled Output Trim
Perform an output trim or a scaled output trim if the digital value for the primary variable matches the plant’s standards but the transmitter’s analog output does not match the reading on the output device. The output trim function calibrates the transmitter to a 4–20 mA reference scale; the scaled output trim function calibrates to a user-selectable reference scale. To determine the need for an output trim or a scaled output trim, perform a loop test (see “Loop Test” on page 3-13).

Figure 3-5. Dynamics of Smart Temperature Measurement

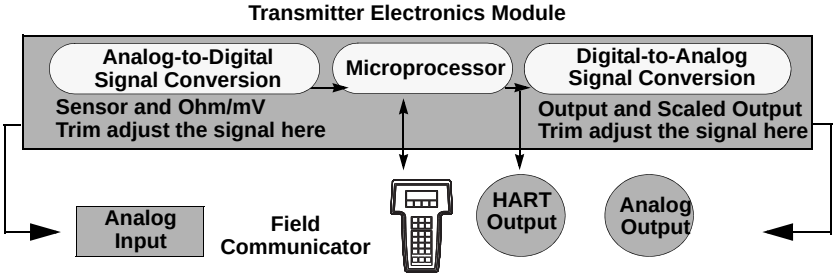

Output Trim

Fast Key Sequence	1, 2, 2, 2

The *D/A Trim* command allows the transmitter's conversion of the input signal to a 4–20 mA output to be altered (see Figure 3-5 on page 3-22). Adjust the analog output signal at regular intervals to maintain measurement precision. To perform a digital-to-analog trim, perform the following procedure:

1. From the **HOME** screen, select *1 Device setup*, *2 Diag/Service*, *2 Calibration*, *2 D/A trim*. Set the control loop to manual and select **OK**.
2. Connect an accurate reference meter to the transmitter at the **CONNECT REFERENCE METER** prompt. To do so, shunt the power to the transmitter through the reference meter at some point in the loop. Select **OK** after connecting the reference meter.
3. Select **OK** at the **SETTING FLD DEV OUTPUT TO 4 MA** prompt. The transmitter outputs 4.00 mA.
4. Record the actual value from the reference meter, and enter it at the **ENTER METER VALUE** prompt. The communicator prompts the user to verify whether or not the output value equals the value on the reference meter.
5. If the reference meter value equals the transmitter output value, then select *1 Yes* and go to step 6. If the reference meter value does not equal the transmitter output value, then select *2 No* and go to step 4.
6. Select **OK** at the **SETTING FLD DEV OUTPUT TO 20 MA** prompt and repeat steps 4 and 5 until the reference meter value equals the transmitter output value.
7. Return the control loop to automatic control and select **OK**.

AMS
Right click on the device and select "Calibrate" from the menu. Select "D/A Trim."

This *wizard* will go through the required changes.

Scaled Output Trim

Fast Key Sequence	1, 2, 2, 3

The *Scaled D/A Trim* command matches the 4 and 20 mA points to a user-selectable reference scale other than 4 and 20 mA (2–10 volts, for example). To perform a scaled D/A trim, connect an accurate reference meter to the transmitter and trim the output signal to scale as outlined in the "Output Trim" procedure.

AMS
Right click on the device and select "Calibrate" from the menu. Select "Scaled D/A Trim."

This *wizard* will go through the required changes.

HART

Hardware

Maintenance

The 644H has no moving parts and requires minimal scheduled maintenance.

Sensor Checkout

To determine whether the sensor is at fault, replace it with another sensor or connect a test sensor locally at the transmitter to test remote sensor wiring. Select any standard, off-the-shelf sensor for use with a 644, or consult the factory for a replacement special sensor and transmitter combination.

Diagnostic Messages

Hardware

If a malfunction is suspected despite the absence of diagnostics messages on the Field Communicator or AMS display, follow the procedures described in Table 3-2 to verify that transmitter hardware and process connections are in good working order. Under each of four major symptoms, specific suggestions are offered for solving the problem.

Table 3-2. 644H Troubleshooting Chart

Symptom	Potential Source	Corrective Action
Transmitter Does Not Communicate with Field Communicator	Loop Wiring	• Check the revision level of the transmitter device descriptors (DDs) stored in the communicator. The communicator should report Dev v6, DD v1. • Check for a minimum of 250 ohms resistance between the power supply and Field Communicator connection. • Check for adequate voltage to the transmitter. If a Field Communicator is connected and 250 ohms resistance is in the loop, the transmitter requires a minimum of 12.0 V at the terminals to operate (over entire 3.75 to 23 mA operating range). • Check for intermittent shorts, open circuits, and multiple grounds. • Specify the transmitter by tag number. For certain non-standard transmitter installations, it may be necessary, because of excessive line length, to specify the transmitter tag number to initiate communications.
High Output	Sensor Input Failure or Connection	• Connect a Field Communicator and enter the transmitter test mode to isolate a sensor failure. • Check for a sensor open or short circuit. • Check the process variable to see if it is out of range.
	Loop Wiring	• Check for dirty or defective terminals, interconnecting pins, or receptacles.
	Power Supply	• Check the output voltage of the power supply at the transmitter terminals. It should be 12.0 to 42.4 VDC (over entire 3.75 to 23 mA operating range).
	Electronics Module	• Connect a Field Communicator and enter the transmitter status mode to isolate module failure. • Connect a Field Communicator and check the sensor limits to ensure calibration adjustments are within the sensor range.
Erratic Output	Loop Wiring	• Check for adequate voltage to the transmitter. It should be 12.0 to 42.4 VDC at the transmitter terminals (over entire 3.75 to 23 mA operating range). • Check for intermittent shorts, open circuits, and multiple grounds. • Connect a Field Communicator and enter the Loop test mode to generate signals of 4 mA, 20 mA, and user-selected values.
	Electronics Module	• Connect a Field Communicator and enter the transmitter test mode to isolate module failure.

Symptom	Potential Source	Corrective Action
Low Output or No Output	Sensor Element	• Connect a Field Communicator and enter the Transmitter test mode to isolate a sensor failure. • Check the process variable to see if it is out of range.
	Loop Wiring	• Check for adequate voltage to the transmitter. It should be 12.0 to 42.4 VDC (over entire 3.75 to 23 mA operating range). • Check for shorts and multiple grounds. • Check for proper polarity at the signal terminal. • Check the loop impedance. • Connect a Field Communicator and enter the Loop test mode. • Check wire insulation to detect possible shorts to ground.
	Electronics Module	• Connect a Field Communicator and check the sensor limits to ensure calibration adjustments are within the sensor range. • Connect a Field Communicator and enter the Transmitter test mode to isolate an electronics module failure.

Field Communicator

Table 3-3 provides a guide to diagnostic messages used by the Field Communicator.

Variable parameters within the text of a message are indicated with the notation <*variable parameter*>. Reference to the name of another message is identified by the notation *[another message]*.

Table 3-3. HART Diagnostics Messages

Message	Description
Add item for ALL device types or only for this ONE device type	Asks the user whether the hot key item being added should be added for all device types or only for the type of device that is connected.
Command Not Implemented	The connected device does not support this function.
Communication Error	Either a device sends back a response indicating that the message it received was unintelligible, or the Field Communicator cannot understand the response from the device.
Configuration memory not compatible with connected device	The configuration stored in memory is incompatible with the device to which a transfer has been requested.
Device Busy	The connected device is busy performing another task.
Device Disconnected	Device fails to respond to a command.
Device write protected	Device is in write-protect mode. Data can not be written.
Device write protected. Do you still want to shut off?	Device is in write-protect mode. Press YES to turn the Field Communicator off and lose the unsent data.
Display value of variable on hotkey menu?	Asks whether the value of the variable should be displayed adjacent to its label on the hotkey menu if the item being added to the hotkey menu is a variable.
Download data from configuration memory to device	Prompts user to press SEND softkey to initiate a memory to device transfer.
Exceed field width	Indicates that the field width for the current arithmetic variable exceeds the device- specified description edit format.
Exceed precision	Indicates that the precision for the current arithmetic variable exceeds the device- specified description edit format.
Ignore next 50 occurrences of status?	Asked after displaying device status. Softkey answer determines whether next 50 occurrences of device status will be ignored or displayed.
Illegal character	An invalid character for the variable type was entered.
Illegal date	The day portion of the date is invalid.
Illegal month	The month portion of the date is invalid.
Illegal year	The year portion of the date is invalid.
Incomplete exponent	The exponent of a scientific notation floating point variable is incomplete.
Incomplete field	The value entered is not complete for the variable type.
Looking for a device	Polling for multidropped devices at addresses 1–15.
Mark as read only variable on hotkey menu?	Asks whether the user should be allowed to edit the variable from the hotkey menu if the item being added to the hotkey menu is a variable.
No device configuration in configuration memory	There is no configuration saved in memory available to re-configure off-line or transfer to a device.
No Device Found	Poll of address zero fails to find a device, or poll of all addresses fails to find a device if auto-poll is enabled.
No hotkey menu available for this device.	There is no menu named “hotkey” defined in the device description for this device.
No offline devices available.	There are no device descriptions available to be used to configure a device offline.
No simulation devices available.	There are no device descriptions available to simulate a device.
No UPLOAD_VARIABLES in ddl for this device	There is no menu named “upload_variables” defined in the device description for this device. This menu is required for offline configuration.
No Valid Items	The selected menu or edit display contains no valid items.
OFF KEY DISABLED	Appears when the user attempts to turn the Field Communicator off before sending modified data or before completing a method.
Online device disconnected with unsent data. RETRY or OK to lose data.	There is unsent data for a previously connected device. Press RETRY to send data, or press OK to disconnect and lose unsent data.

Message	Description
Out of memory for hotkey configuration. Delete unnecessary items.	There is no more memory available to store additional hotkey items. Unnecessary items should be deleted to make space available.
Overwrite existing configuration memory	Requests permission to overwrite existing configuration either by a device-to-memory transfer or by an offline configuration. User answers using the softkeys.
Press OK.	Press the OK softkey. This message usually appears after an error message from the application or as a result of HART communications.
Restore device value?	The edited value that was sent to a device was not properly implemented. Restoring the device value returns the variable to its original value.
Save data from device to configuration memory	Prompts user to press SAVE softkey to initiate a device-to-memory transfer.
Saving data to configuration memory.	Data is being transferred from a device to configuration memory.
Sending data to device.	Data is being transferred from configuration memory to a device.
There are write only variables which have not been edited. Please edit them.	There are write-only variables which have not been set by the user. These variables should be set or invalid values may be sent to the device.
There is unsent data. Send it before shutting off?	Press YES to send unsent data and turn the Field Communicator off. Press NO to turn the Field Communicator off and lose the unsent data.
Too few data bytes received	Command returns fewer data bytes than expected as determined by the device description.
Transmitter Fault	Device returns a command response indicating a fault with the connected device.
Units for <variable label> has changed. Unit must be sent before editing, or invalid data will be sent.	The engineering units for this variable have been edited. Send engineering units to the device before editing this variable.
Unsent data to online device. SEND or LOSE data	There is unsent data for a previously connected device which must be sent or thrown away before connecting to another device.
Use up/down arrows to change contrast. Press DONE when done.	Gives direction to change the contrast of the Field Communicator display.
Value out of range	The user-entered value is either not within the range for the given type and size of variable or not within the min/max specified by the device.
<message> occurred reading/writing <variable label>	Either a read/write command indicates too few data bytes received, transmitter fault, invalid response code, invalid response command, invalid reply data field, or failed pre- or post-read method; or a response code of any class other than SUCCESS is returned reading a particular variable.
<variable label> has an unknown value. Unit must be sent before editing, or invalid data will be sent.	A variable related to this variable has been edited. Send related variable to the device before editing this variable.

AMS Software

The following is a list of messages used by AMS software. These are communicated through pop-up menus.

Message	Description
Command not implemented	The connected device does not support this function.
Communication error	Either a device sends back a response indicating that the message it received was unintelligible, or the Field Communicator cannot understand the response from the device.
Device busy	The connected device is busy performing another task.
Device disappears from list	Device fails to respond to a command.
Device write protected	Device is in write-protect mode. Data can not be written.
Illegal character	An invalid character for the variable type was entered.
Illegal date	The day portion of the date is invalid.
Illegal month	The month portion of the date is invalid.
Illegal year	The year portion of the date is invalid.
Incomplete exponent	The exponent of a scientific notation floating point variable is incomplete.
Incomplete field	The value entered is not complete for the variable type.
Sending data to device	Data is being transferred from configuration memory to a device.
There are write only variables which have not been edited. Please edit them	There are write-only variables that have not been set by the user. These variables should be set or invalid values may be sent to the device.
There is unsent data. Send it before shutting off?	Press YES to send unsent data and turn the Field Communicator off. Press NO to turn the Field Communicator off and lose the unsent data.
Too few data bytes received	Command returns fewer data bytes than expected as determined by the device description.
Transmitter fault	Device returns a command response indicating a fault with the connected device.
Units for <variable label> has changed. Unit must be sent before editing, or invalid data will be sent.	The engineering units for this variable have been edited. Send engineering units to the device before editing this variable.
Unsent data to online device. SEND or LOSE data	There is unsent data for a previously connected device which must be sent or thrown away before connecting to another device.
Value out of range	The user-entered value is either not within the range for the given type and size of variable or not within the min/max specified by the device.
<message> occurred reading/writing <variable label>	Either a read/write command indicates too few data bytes received, transmitter fault, invalid response code, invalid response command, invalid reply data field, or failed pre- or post-read method; or a response code of any class other than SUCCESS is returned reading a particular variable.
<variable label> has an unknown value. Unit must be sent before editing, or invalid data will be sent.	A variable related to this variable has been edited. Send related variable to the device before editing this variable.

LCD Display

The LCD display displays abbreviated diagnostic messages for troubleshooting the transmitter. To determine the cause of a message, use a Field Communicator to further interrogate the transmitter. A description of each diagnostic message is identified in Table 3-4. The device sometimes requires additional interrogation to determine the source of the warning. Contact Emerson Process Management Customer Central at (800) 999-9307 for further information.

Table 3-4. LCD Display Diagnostics

ALARM	Description
DEV FAIL	The top line of the display scrolls through the following three messages: • “BAD” • “DEV” • “FAIL” This message indicates one of several conditions. For example, the transmitter may have experienced an electronics failure while attempting to store information. If diagnostics indicate an electronics failure, replace the transmitter with a new one. Contact the nearest Emerson Process Management Field Service Center if necessary.
SNSR FAIL	The top line of the display scrolls through the following three messages: • “BAD” • “SNSR” • “FAIL” The bottom line display s the name of the sensor that has failed. This message indicates that the transmitter has detected an open or shorted sensor condition. The sensor may be disconnected, connected improperly, or malfunctioning. Check the sensor connections and sensor continuity.
UNCRN	The top line of the display alternates between “UNCRN” and the sensor value. The bottom line will display the name of the sensor for which this message applies. The uncertain message is displayed when the sensor reading is outside of the acceptable temperature range for the particular sensor type.
FIXED	During a loop test or a a 4–20 mA output trim, the analog output defaults to a fixed value. The top line of the display alternates between “FIXED” and the amount of current selected in milliamperes. The bottom line will hold on “AO mA.”
OFLOW	The location of the decimal point, as configured in the meter setup, is not compatible wit the value to be displayed by the meter. For example, if the meter is measuring a process temperature greater than 9.9999 degrees and the meter decimal point is set to 4-digit precision, the meter will display an “OFLOW” message because it is only capable of displaying a maximum of 9.9999 when set to 4-digit precision.
ALARM	When a failure occurs and the meter is configured to display Primary Variable Percent of Range and/or Analog Output, the top line o the meter will display “ALARM.” This indicates that the transmitter is in failure mode.
SAT	When the transmitter output saturates and the meter is configured to display Primary Variable Percent of Range and/or Analog Output, the top line of the meter will display “SAT.” This indicates that the transmitter output has reached saturation level.

Section 4 FOUNDATION fieldbus Configuration

Overview . . . . . **page 4-1**
Safety Messages . . . . . **page 4-1**
General Block Information . . . . . **page 4-2**
FOUNDATION fieldbus function blocks . . . . . **page 4-4**
Operation and Maintenance . . . . . **page 4-14**

OVERVIEW

This section provides information on configuring, troubleshooting, operating, and maintaining the Rosemount 644 Temperature transmitter using FOUNDATION fieldbus protocol.

SAFETY MESSAGES

Instructions and procedures in this section may require special precautions to ensure the safety of the personnel performing the operations. Information that potentially raises safety issues is indicated by a warning symbol (⚠). Please refer to the following safety messages before performing an operation preceded by this symbol.

Warnings

⚠WARNING

Failure to follow these installation guidelines could result in death or serious injury.

- Make sure only qualified personnel perform the installation.

Explosions could result in death or serious injury.

- Do not remove the connection head cover in explosive atmospheres when the circuit is live.
- Before powering a FOUNDATION fieldbus segment in an explosive atmosphere, make sure the instruments in the loop are installed in accordance with instrinsically safe or non-incendive field wiring practices.
- Verify that the operating atmosphere of the transmitter is consistent with the appropriate hazardous locations certifications.
- All connection head covers must be fully engaged to meet explosion-proof requirements.

Process leaks could result in death or serious injury.

- Do not remove the thermowell while in operation.
- Install and tighten thermowells and sensors before applying pressure

Electrical shock could cause death or serious injury.

- Use extreme caution when making contact with the leads and terminals.

GENERAL BLOCK INFORMATION

Device Description

Before configuring the device, ensure the host has the appropriate Device Description file revision for this device. The device descriptor can be found on www.rosemount.com. The initial release of the Rosemount 644 with FOUNDATION fieldbus protocol is device revision 1.

Node Address

The transmitter is shipped at a temporary (248) address. This will enable FOUNDATION fieldbus host systems to automatically recognize the device and move it to a permanent address.

Modes

The Resource, Transducer, and all function blocks in the device have modes of operation. These modes govern the operation of the block. Every block supports both automatic (AUTO) and out of service (OOS) modes. Other modes may also be supported.

⚠ **Changing Modes**

To change the operating mode, set the MODE_BLK.TARGET to the desired mode. After a short delay, the parameter MODE_BLOCK.ACTUAL should reflect the mode change if the block is operating properly.

Permitted Modes

It is possible to prevent unauthorized changes to the operating mode of a block. To do this, configure MODE_BLOCK.PERMITTED to allow only the desired operating modes. It is recommended to always select OOS as one of the permitted modes.

Types of Modes

For the procedures described in this manual, it will be helpful to understand the following modes:

AUTO
The functions performed by the block will execute. If the block has any outputs, these will continue to update. This is typically the normal operating mode.

Out of Service (OOS)
The functions performed by the block will not execute. If the block has any outputs, these will typically not update and the status of any values passed to downstream blocks will be “BAD”. To make some changes to the configuration of the block, change the mode of the block to OOS. When the changes are complete, change the mode back to AUTO.

MAN
In this mode, variables that are passed out of the block can be manually set for testing or override purposes.

Other Types of Modes
Other types of modes are Cas, RCas, ROut, IMan and LO. Some of these may be supported by different function blocks in the 644. For more information, see the Function Block manual (document number 00809-0100-4783).

NOTE
When an upstream block is set to OOS, this will impact the output status of all downstream blocks. The figure below depicts the hierarchy of blocks:

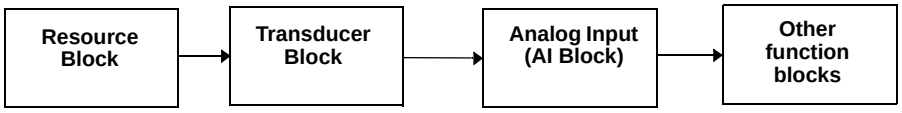

Link Active Scheduler

The 644 can be designated to act as the backup Link Active Scheduler (LAS) in the event that the designated LAS is disconnected from the segment. As the backup LAS, the 644 will take over the management of communications until the host is restored.

The host system may provide a configuration tool specifically designed to designate a particular device as a backup LAS. Otherwise, this can be configured manually as follows:

1. Access the Management Information Base (MIB) for the 644. To activate the LAS capability, write 0x02 to the BOOT_OPERAT_FUNCTIONAL_CLASS object (Index 605). To deactivate, write 0x01.
2. Restart the device.

Block Installation

Rosemount devices are pre-configured with function blocks at the factory, the default permanent configuration for the 644 is listed below. The 644 can have up to ten additional instantiated function blocks.

- 2 Analog Input Blocks (tag names AI 1300, AI 1400)
- 1 Proportional/Integral/Derivative Block (tag name PID 1500)

The 644 supports the use of Function Block Instantiation. When a device supports block instantiation, the number of blocks and block types can be defined to match specific application needs.The number of blocks that can be instantiated is only limited by the amount of memory within the device and the block types that are supported by the device. Instantiation does not apply to standard device blocks like the Resource, Sensor Transducer, LCD Transducer, and Advanced Diagnostics Blocks.

By reading the parameter “FREE_SPACE” in the Resource block you can determine how many blocks you can instantiate. Each block that you instantiate takes up 4.5% of the “FREE_SPACE”.

Block instantiation is done by the host control system or configuration tool, but not all hosts are required to implement this functionality. Please refer to your specific host or configuration tool manual for more information.

Capabilities

Virtual Communication Relationship (VCRs)

There are a total of 12 VCRs. One is permanent and 11 are fully configurable by the host system. Sixteen link objects are available.

Network Parameter	Value
Slot Time	8
Maximum Response Delay	2
Maximum Inactivity to Claim LAS Delay	32
Minimum Inter DLPDU Delay	8
Time Sync class	4 (1ms)
Maximum Scheduling Overhead	21
Per CLPDU PhL Overhead	4
Maximum Inter-channel Signal Skew	0
Required Number of Post-transmission-gab-ext Units	0
Required Number of Preamble-extension Units	1

Block Execution times

Analog Input = 45 ms
PID = 60 ms

FOUNDATION FIELDBUS FUNCTION BLOCKS

For reference information on the Resource, Sensor Transducer, AI, LCD Transducer blocks refer to FOUNDATION fieldbus Block Information on page A-1. Reference information on the PID block can be found in the Function Block manual document number 00809-0100-4783.

Resource Block (index number 1000)

The Resource Function Block (RB) contains diagnostic, hardware and electronics information. There are no linkable inputs or outputs to the Resource Block.

Sensor Transducer Block (index number 1100)

The Sensor Transducer Function Block (STB) temperature measurement data, including sensor and terminal temperature, The STB also includes information about sensor type, engineering units, linearization, reranging, damping, temperature compensation, and diagnostics.

LCD Transducer Block (index number 1200)

The LCD Transducer Block is used to configure the LCD meter.

Analog Input Block (index number 1300 and 1400)

The Analog Input Function Block (AI) processes the measurements from the sensor and makes them available to other function blocks. The output value from the AI block is in engineering units and contains a status indicating the quality of the measurement. The AI block is widely used for scaling functionality.

PID Block (index number 1500)

The PID Function Block combines all of the necessary logic to perform proportional/integral/derivative (PID) control. The block supports mode control, signal scaling and limiting, feed forward control, override tracking, alarm limit detection, and signal status propagation.

The block supports two forms of the PID equation: Standard and Series. You can choose the appropriate equation using the MATHFORM parameter. The Standard ISA PID equation is the default selection.

Resource Block

FEATURES and FEATURES_SEL

The parameters FEATURES and FEATURE_SEL determine optional behavior of the 644.

FEATURES
The FEATURES parameter is read only and defines which features are supported by the 644. Below is a list of the FEATURES the 644 supports.

UNICODE
All configurable string variables in the 644, except tag names, are octet strings. Either ASCII or Unicode may be used. If the configuration device is generating Unicode octet strings, you must set the Unicode option bit.

REPORTS
The 644 supports alert reports. The Reports option bit must be set in the features bit string to use this feature. If it is not set, the host must poll for alerts.

SOFT W LOCK
Inputs to the security and write lock functions include the software write lock bits of the FEATURE_SEL parameter, the WRITE_LOCK parameter, and the DEFINE_WRITE_LOCK parameter.

The WRITE_LOCK parameter prevents modification of parameters within the device except to clear the WRITE_LOCK parameter. During this time, the block will function normally updating inputs and outputs and executing algorithms. When the WRITE_LOCK condition is cleared, a WRITE_ALM alert is generated with a priority that corresponds to the WRITE_PRI parameter.

The FEATURE_SEL parameter enables the user to select the software write lock or no write lock capability. In order to enable the software write lock, the SOFT_W_LOCK bit must be set in the FEATURE_SEL parameter. Once this bit is set, the WRITE_LOCK parameter may be set to “Locked” or “Unlocked.” Once the WRITE_LOCK parameter is set to “Locked” by the software, all user requested writes as determined by the DEFINE_WRITE_LOCK parameter shall be rejected.

The DEFINE_WRITE_LOCK parameter allows the user to configure whether the write lock function will control writing to all blocks, or only to the resource and transducer blocks. Internally updated data such as process variables and diagnostics will not be restricted.
N/A = No blocks are blocked
Physical = Locks resource and transducer block
Everything = Locks every block.

The following table displays all possible configurations of the WRITE_LOCK parameter.

FEATURE_SEL SW_SEL bit	WRITE_LOCK	WRITE_LOCK Read/Write	DEFINE_WRITE_LOCK	Write access to blocks
0 (off)	1 (unlocked)	Read only	NA	All
1 (on)	1 (unlocked)	Read/Write	NA	All
1 (on)	2 (locked)	Read/Write	Physical	Function Blocks only
1 (on)	2 (locked)	Read/Write	Everything	None

FEATURES_SEL
FEATURES_SEL is used to turn on any of the supported features. The default setting of the 644 does not select any of these features. Choose one of the supported features if any.

MAX_NOTIFY

The MAX_NOTIFY parameter value is the maximum number of alert reports that the resource can have sent without getting a confirmation, corresponding to the amount of buffer space available for alert messages. The number can be set lower, to control alert flooding, by adjusting the LIM_NOTIFY parameter value. If LIM_NOTIFY is set to zero, then no alerts are reported.

PlantWeb™ Alerts

The alerts and recommended actions should be used in conjunction with “Operation and Maintenance” on page 4-14.

The Resource Block will act as a coordinator for PlantWeb alerts. There will be three alarm parameters (FAILED_ALARM, MAINT_ALARM, and ADVISE_ALARM) which will contain information regarding some of the device errors which are detected by the transmitter software. There will be a RECOMMENDED_ACTION parameter which will be used to display the recommended action text for the highest priority alarm and a HEALTH_INDEX parameters (0 - 100) indicating the overall health of the transmitter. FAILED_ALARM will have the highest priority followed by MAINT_ALARM and ADVISE_ALARM will be the lowest priority.

FAILED_ALARMS
A failure alarm indicates a failure within a device that will make the device or some part of the device non-operational. This implies that the device is in need of repair and must be fixed immediately. There are five parameters associated with FAILED_ALARMS specifically, they are described below.

FAILED_ENABLED
This parameter contains a list of failures in the device which makes the device non-operational that will cause an alert to be sent. Below is a list of the failures with the highest priority first.

1. Electronics
2. NV Memory
3. HW / SW Incompatible
4. Primary Value
5. Secondary Value

FAILED_MASK
This parameter will mask any of the failed conditions listed in FAILED_ENABLED. A bit on means that the condition is masked out from alarming and will not be reported.

FAILED_PRI
Designates the alerting priority of the FAILED_ALM, see “Alarm Priority” on page 4-12. The default is 0 and the recommended value are between 8 and 15.

FAILED_ACTIVE
This parameter displays which of the alarms is active. Only the alarm with the highest priority will be displayed. This priority is not the same as the FAILED_PRI parameter described above. This priority is hard coded within the device and is not user configurable.

FAILED_ALM
Alarm indicating a failure within a device which makes the device non-operational.

MAINT_ALARMS
A maintenance alarm indicates the device or some part of the device needs maintenance soon. If the condition is ignored, the device will eventually fail. There are five parameters associated with MAINT_ALARMS, they are described below.

MAINT_ENABLED
The MAINT_ENABLED parameter contains a list of conditions indicating the device or some part of the device needs maintenance soon.

Below is a list of the conditions with the highest priority first.

1. Primary Value Degraded
2. Secondary Value Degraded
3. Diagnostic
4. Configuration Error
5. Calibration Error

MAINT_MASK
The MAINT_MASK parameter will mask any of the failed conditions listed in MAINT_ENABLED. A bit on means that the condition is masked out from alarming and will not be reported.

MAINT_PRI
MAINT_PRI designates the alarming priority of the MAINT_ALM, “Process Alarms” on page 4-12. The default is 0 and the recommended values is 3 to 7.

MAINT_ACTIVE
The MAINT_ACTIVE parameter displays which of the alarms is active. Only the condition with the highest priority will be displayed. This priority is not the same as the MAINT_PRI parameter described above. This priority is hard coded within the device and is not user configurable.

MAINT_ALM
An alarm indicating the device needs maintenance soon. If the condition is ignored, the device will eventually fail.

Advisory Alarms
An advisory alarm indicates informative conditions that do not have a direct impact on the device's primary functions There are five parameters associated with ADVISE_ALARMS, they are described below.

ADVISE_ENABLED
The ADVISE_ENABLED parameter contains a list of informative conditions that do not have a direct impact on the device's primary functions. Below is a list of the advisories with the highest priority first.

1. NV Writes Deferred
2. SPM Process Anomaly detected

ADVISE_MASK
The ADVISE_MASK parameter will mask any of the failed conditions listed in ADVISE_ENABLED. A bit on means the condition is masked out from alarming and will not be reported.

ADVISE_PRI
ADVISE_PRI designates the alarming priority of the ADVISE_ALM, see “Process Alarms” on page 4-12. The default is 0 and the recommended values are 1 or 2.

ADVISE_ACTIVE
The ADVISE_ACTIVE parameter displays which of the advisories is active. Only the advisory with the highest priority will be displayed. This priority is not the same as the ADVISE_PRI parameter described above. This priority is hard coded within the device and is not user configurable.

ADVISE_ALM
ADVISE_ALM is an alarm indicating advisory alarms. These conditions do not have a direct impact on the process or device integrity.

Recommended Actions for PlantWeb Alerts

RECOMMENDED_ACTION
The RECOMMENDED_ACTION parameter displays a text string that will give a recommended course of action to take based on which type and which specific event of the PlantWeb alerts are active.

Table 4-1.
RB.RECOMMENDED_ACTION

	Alarm Type	Failed/Maint/Advise Active Event	Recommended Action Text String
PlantWeb Alerts	None	None	No action required
	Advisory	NV Writes Deferred	Non-volatile writes have been deferred, leave the device powered until the advisory goes away
	Maintenance	Configuration Error	Re-write the Sensor Configuration
		Primary Value Degraded	Confirm the operating range of the applied sensor and/or verify the sensor connection and device environment
		Calibration Error	Retrim the device
		Secondary Value Degraded	Verify the ambient temperature is within operating limits
	Failed	Electronics Failure	Replace the Device
		HW / SW Incompatible	Verify the Hardware Revision is compatible with the Software Revision
		NV Memory Failure	Reset the device then download the Device Configuration
		Primary Value Failure	Verify the instrument process is within the Sensor range and / or confirm sensor configuration and wiring.
		Secondary Value Failure	Verify the ambient temperature is within operating limits

Sensor Transducer Block

NOTE
When the engineering units of the XD_SCALE are selected, the engineering units in the Transducer Block change to the same units. THIS IS THE ONLY WAY TO CHANGE THE ENGINEERING UNITS IN THE SENSOR TRANSDUCER BLOCK.

Damping

The damping parameter in the Transducer Block may be used to filter measurement noise. By increasing the damping time, the transmitter will have a slower response time, but will decrease the amount of process noise that is translated to the Transducer Block Primary Value. Because both the LCD and AI Block get input from the Transducer Block, adjusting the damping parameter will effect both blocks.

NOTE
The AI Block has it's own filtering parameter called PV_FTIME. For simplicity, it is better to do filtering in the Transducer Block as damping will be applied to primary value on every sensor update. If filtering is done in AI block, damping will be applied to output every macrocycle. The LCD will display value from Transducer block.

Analog Input (AI) Function Block

Configure the AI block

A minimum of four parameters are required to configure the AI Block. The parameters are described below with example configurations shown at the end of this section.

CHANNEL
Select the channel that corresponds to the desired sensor measurement. The 644 measures both sensor temperature (channel 1) and terminal temperature (channel 2).

L_TYPE
The L_TYPE parameter defines the relationship of the sensor measurement (sensor temperature) to the desired output temperature of the AI Block. The relationship can be direct or indirect.

Direct
Select direct when the desired output will be the same as the sensor measurement (sensor temperature).

Indirect
Select indirect when the desired output is a calculated measurement based on the sensor measurement (e.g. ohm or mV). The relationship between the sensor measurement and the calculated measurement will be linear.

XD_SCALE and OUT_SCALE
The XD_SCALE and OUT_SCALE each include four parameters: 0%, 100%, engineering units, and precision (decimal point). Set these based on the L_TYPE:

L_TYPE is Direct
When the desired output is the measured variable, set the XD_SCALE to represent the operating range of the process. Set OUT_SCALE to match XD_SCALE.

L_TYPE is Indirect
When an inferred measurement is made based on the sensor measurement, set the XD_SCALE to represent the operating range that the sensor will see in the process. Determine the inferred measurement values that correspond to the XD_SCALE 0 and 100% points and set these for the OUT_SCALE.

NOTE
To avoid configuration errors, only select Engineering Units for XD_SCALE and OUT_SCALE that are supported by the device. The supported units are:

Pressure (Channel 1)	Temperature (Channel 2)
°C	°C
°F	°F
K	K
R	R
Ω	Ω
mV	mV

When the engineering units of the XD_SCALE are selected, this causes the engineering units of the PRIMARY_VALUE_RANGE in the Transducer Block to change to the same units. THIS IS THE ONLY WAY TO CHANGE THE ENGINEERING UNITS IN THE SENSOR TRANSDUCER BLOCK, PRIMARY_VALUE_RANGE parameter.

Configuration Examples

4-wire, Pt 100 α = 385
AI1 = Process Temperature
AI2 = Terminal Temperature

Transducer Block
If Host System Supports Methods:
1. Click on Methods
2. Choose Sensor Connections
3. Follow on-screen instruction.

If Host System Doesn't Not Support Methods:
1. Put transducer block into OOS mode.
   a. Go to MODE_BLK.TARGET
   b. Choose OOS (0x80)
2. Go to SENSOR_CONNECTION.
   a. Choose 4-wire (0x4)
3. Go to SENSOR_TYPE.
   a. Choose PT100A385
4. Put the transducer block back into Auto mode.

AI Blocks (Basic Configuration)[1]

AI1 as Process Temperature

1. Put the AI Block into OOS mode.
   a. Go to MODE_BLK.TARGET
   b. Choose OOS (0x80)
2. Go to CHANNEL
   a. Choose Sensor 1
3. Go to L_TYPE
   a. Choose Direct
4. Go to XD_Scale
   a. Choose UNITS_INDEX to be °C
5. Go to OUT_SCALE
   a. Choose UNITS_INDEX to be °C
   b. Set the 0 and 100 scale to be the same as the PRIMARY_VALUE_RANGE
6. Put the AI Block back into Auto mode.
7. Follow Host Procedure Download Schedule into Block.

AI2 as Terminal Temperature

1. Put the AI Block into OOS mode.
   a. Go to MODE_BLK.TARGET
   b. Choose OOS (0x80)
2. Go to CHANNEL
   a. Choose Body Temperature
3. Go to L_TYPE
   a. Choose Direct
4. Go to XD_Scale
   a. Choose UNITS_INDEX to be °C
5. Go to OUT_SCALE
   a. Choose UNITS_INDEX to be °C
   b. Set the 0 and 100 scale to be the same as the SECONDARY_VALUE_RANGE
6. Put the AI Block back into Auto mode.
7. Follow Host Procedure Download Schedule into Block.

(1) Configure a minimum of four parameters to get a value out of the AI Block

Filtering

⚠ The filtering feature changes the response time of the device to smooth variations in output readings caused by rapid changes in input. Adjust the filter time constant (in seconds) using the PV_FTIME parameter. Set the filter time constant to zero to disable the filter feature.

Process Alarms

Process Alarm detection is based on the OUT value. Configure the alarm limits of the following standard alarms:

- High (HI_LIM)
- High high (HI_HI_LIM)
- Low (LO_LIM)
- Low low (LO_LO_LIM)

In order to avoid alarm chattering when the variable is oscillating around the alarm limit, an alarm hysteresis in percent of the PV span can be set using the ALARM_HYS parameter. The priority of each alarm is set in the following parameters:

- HI_PRI
- HI_HI_PRI
- LO_PRI
- LO_LO_PRI

Alarm Priority

Alarms are grouped into five levels of priority:

Priority Number	Priority Description
0	The alarm condition is not used.
1	An alarm condition with a priority of 1 is recognized by the system, but is not reported to the operator.
2	An alarm condition with a priority of 2 is reported to the operator.
3-7	Alarm conditions of priority 3 to 7 are advisory alarms of increasing priority.
8-15	Alarm conditions of priority 8 to 15 are critical alarms of increasing priority.

Status Options

Status Options (STATUS_OPTS) supported by the AI block are shown below:

Propagate Fault Forward
If the status from the sensor is Bad, Device failure or Bad, Sensor failure, propagate it to OUT without generating an alarm. The use of these sub-status in OUT is determined by this option. Through this option, the user may determine whether alarming (sending of an alert) will be done by the block or propagated downstream for alarming.

Uncertain if Limited
Set the output status of the Analog Input block to uncertain if the measured or calculated value is limited.

BAD if Limited
Set the output status to Bad if the sensor is violating a high or low limit.

Uncertain if Man Mode
Set the output status of the Analog Input block to uncertain if the actual mode of the block is Man.

NOTE
The instrument must be in Out of Service mode to set the status option.

Advanced Features

The AI Function Block provides added capability through the addition of the following parameters:

ALARM_TYPE
ALARM_TYPE allows one or more of the process alarm conditions detected by the AI function block to be used in setting its OUT_D parameter.

OUT_D
OUT_D is the discrete output of the AI function block based on the detection of process alarm condition(s). This parameter may be linked to other function blocks that require a discrete input based on the detected alarm condition.

LCD Transducer Block

The LCD meter connects directly to the 644 electronics FOUNDATION fieldbus output board. The meter indicates output and abbreviated diagnostic messages.

The first line of five characters displays the sensor being measured.

If the measurement is in error, “Error” appears on the first line. The second line indicates if the device or the sensor is causing the error.

Each parameter configured for display will appear on the LCD for a brief period before the next parameter is displayed. If the status of the parameter goes bad, the LCD will also cycle diagnostics following the displayed variable:

Custom Meter Configuration

Shipped from the factory, Parameter #1 is configured to display the Primary Variable (temperature) from the LCD Transducer Block. Parameters 2 – 4 are not configured. To change the configuration of Parameter #1 or to configure additional parameters 2 – 4, use the configuration parameters below.

The LCD Transducer Block can be configured to sequence four different process variables as long as the parameters are sourced from a function block that is scheduled to execute within the 644 temperature transmitter. If a function block is scheduled in the 644 that links a process variable from another device on the segment, that process variable can be displayed on the LCD.

DISPLAY_PARAM_SEL
The DISPLAY_PARAM_SEL parameter specifies how many process variables will be displayed. Select up to four display parameters.

BLK_TAG_#(1)
Enter the Block Tag of the function block that contains the parameter to be displayed. The default function block tags from the factory are:

TRANSDUCER
AI 1300
AI 1400
PID 1500

BLK_TYPE_#(1)
Enter the Block Type of the function block that contains the parameter to be displayed. This parameter is generally selected via a drop-down menu with a list of possible function block types. (e.g. Transducer, PID, AI, etc.)

PARAM_INDEX_#(1)
The PARAM_INDEX_# parameter is generally selected via a drop-down menu with a list of possible parameter names based upon what is available in the function block type selected. Choose the parameter to be displayed.

CUSTOM_TAG_#(1)
The CUSTOM_TAG_# is an optional user-specified tag identifier that can be configured to be displayed with the parameter in place of the block tag. Enter a tag of up to five characters.

UNITS_TYPE_#(1)
The UNITS_TYPE_# parameter is generally selected via a drop-down menu with three options: AUTO, CUSTOM, or NONE. Select AUTO only when the parameter to be displayed is pressure, temperature, or percent. For other parameters, select CUSTOM and be sure to configure the CUSTOM_UNITS_# parameter. Select NONE if the parameter is to be displayed without associated units.

CUSTOM_UNITS_#(1)
Specify custom units to be displayed with the parameter. Enter up to six characters. To display Custom Units the UNITS_TYPE_# must be set to CUSTOM.

OPERATION AND MAINTENANCE

Overview

This section contains information on operation and maintenance procedures.

METHODS AND MANUAL OPERATION
Each FOUNDATION fieldbus host or configuration tool has different ways of displaying and performing operations. Some hosts will use Device Descriptions (DD) and DD Methods to complete device configuration and will display data consistently across platforms. The DD can found on www.rosemount.com. There is no requirement that a host or configuration tool support these features.

The information in this section will describe how to use methods in a general fashion. In addition, if your host or configuration tool does not support methods this section will cover manually configuring the parameters involved with each method operation. For more detailed information on the use of methods, see your host or configuration tool manual.

(1) # represents the specified parameter number.

Troubleshooting Guides

Figure 4-1. 644 troubleshooting flowchart

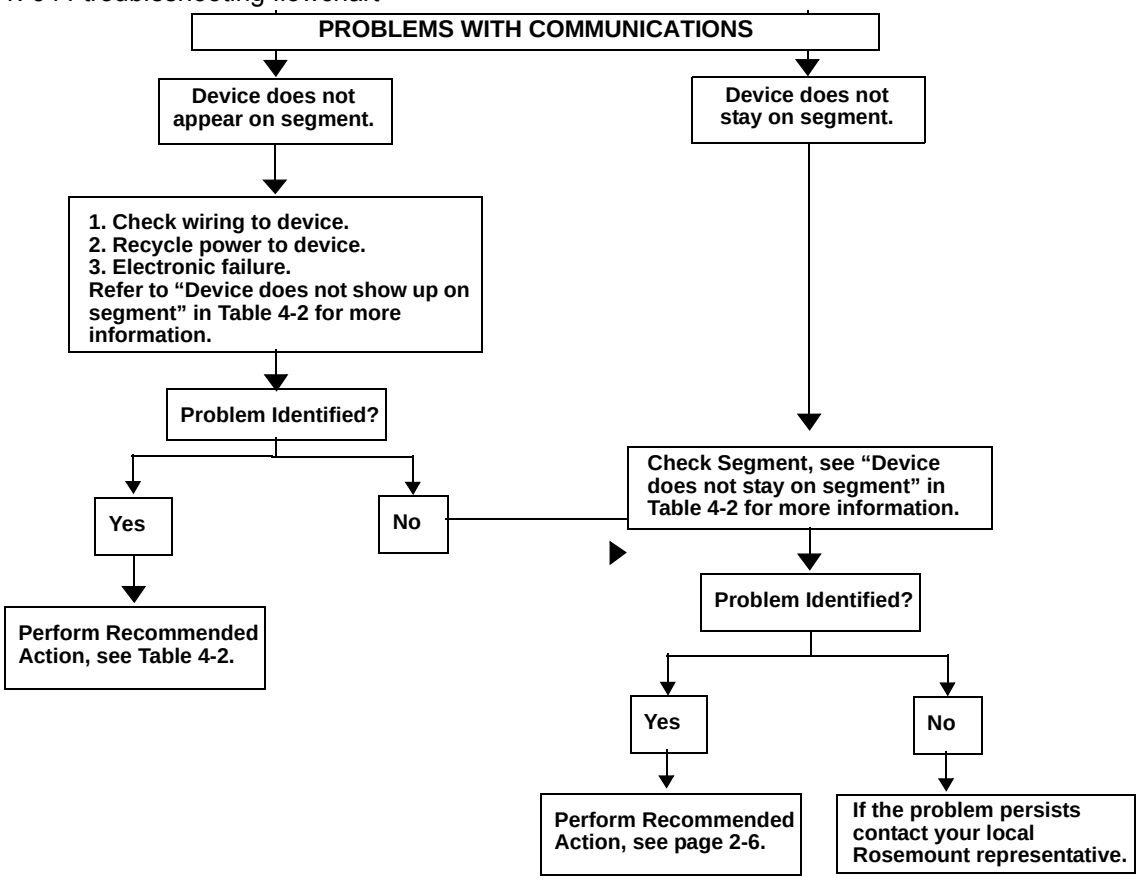

Table 4-2. Troubleshooting guide.

Symptom[(1)]	Cause	Recommended Actions
Device does not show up on segment	Unknown	Recycle power to device
	No power to device	1. Ensure the device is connected to the segment. 2. Check voltage at terminals. There should be 9–32Vdc. 3. Check to ensure the device is drawing current. There should be approximately 10.5 mA nominal (11 mA max.)
	Segment problems	
	Electronics failing	1. Replace device.
	Incompatible network settings	Change host network parameters. Refer to host documentation for procedure.
Device does not stay on segment[(2)]	Incorrect signal levels. Refer to host documentation for procedure.	1. Check for two terminators. 2. Excess cable length. 3. Bad Power supply or conditioner
	Excess noise on segment. Refer to host documentation for procedure.	1. Check for incorrect grounding. 2. Check for correct shielded wire. 3. Tighten wire connections. 4. Check for corrosion or moisture on terminals. 5. Check for Bad power supply.
	Electronics failing	1. Replace device.
	Other	1. Check for water around the transmitter.

(1) The corrective actions should be done with consultation of your system integrator.

(2) Wiring and installation 31.25 kbit/s, voltage mode, wire medium application guide AG-140 available from the Fieldbus Foundation.

Figure 4-2. Problems with communications flowchart

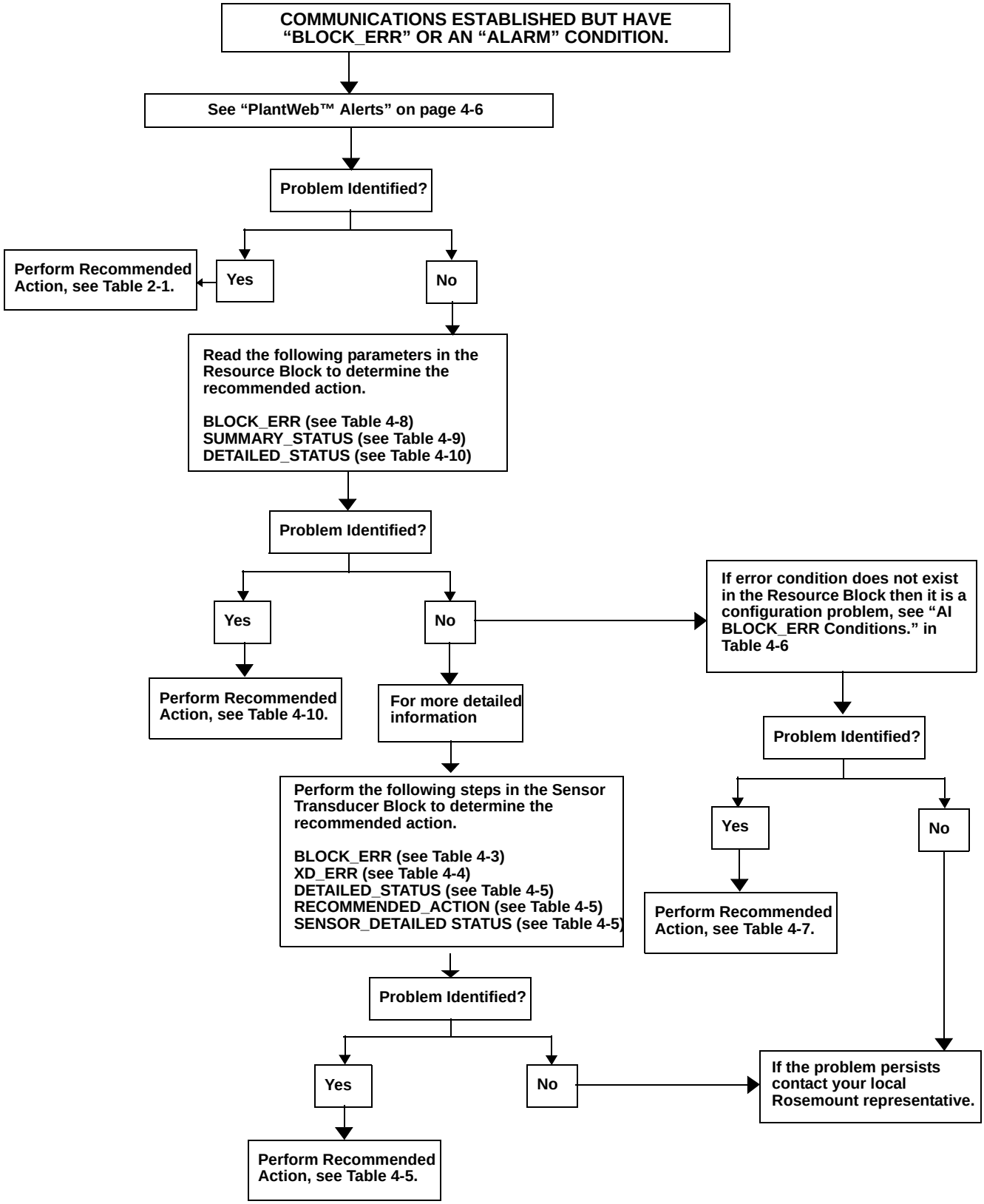

Sensor Transducer Block

Sensor Calibration, Lower and Upper Trim Methods

⚠ In order to calibrate the transmitter, run the Lower and Upper Trim Methods. If your system does not support methods, manually configure the Transducer Block parameters listed below.

1. Set MODE_BLK.TARGET to OOS
2. Set SENSOR_CAL_METHOD to User Trim
3. Set CAL_UNIT to supported engineering units in the Transducer Block
4. Apply temperature that corresponds to the lower calibration point and allow the temperature to stabilize. The temperature must be between the range limits defined in PRIMRY_VALUE_RANGE.
5. Set values of CAL_POINT_LO to correspond to the temperature applied by the sensor.
6. Apply temperature, temperature corresponding to the upper calibration
7. Allow temperature to stabilize.
8. Set CAL_POINT_HI

NOTE
CAL_POINT_HI must be within PRIMARY_VALUE_RANGE and greater than CAL_POINT_LO + CAL_MIN_SPAN

9. Set SENSOR_CAL_DATE to the current date.
10. Set SENSOR_CAL_WHO to the person responsible for the calibration.
11. Set SENSOR _CAL_LOC to the calibration location.
12.
13. Set MODE_BLK.TARGET to AUTO

NOTE
If trim fails the transmitter will automatically revert to factory trim.

Excessive correction or sensor failure could cause device status to read “calibration error.” To clear this, trim the transmitter

Recall Factory Trim

⚠ To recall a factory trim on the transmitter, run the Recall Factory Trim. If your system does not support methods, manually configure the Transducer Block parameters listed below.

1. Set MODE_BLK.TARGET to OOS
2. Set SENSOR_CAL_METHOD to Factory Trim.
3. Set SET_FACTORY_TRIM to Recall.
4. Set SENSOR_CAL_DATE to the current date.
5. Set SENSOR_CAL_WHO to the person responsible for the calibration.
6. Set SENSOR _CAL_LOC to the calibration location.
7. Set MODE_BLK.TARGET to AUTO.

NOTE
When sensor type is changed, the transmitter reverts to the factory trim. Changing sensor type causes you to loose any trim performed on the transmitter.

Table 4-3. Sensor Transducer Block BLOCK_ERR messages

Condition Name and Description
Other
Out of Service: The actual mode is out of service.

Table 4-4. Sensor Transducer Block XD_ERR messages

Condition Name and Description
Electronics Failure: An electrical component failed.
I/O Failure: An I/O failure occurred.
Software Error: The software has detected an internal error.
Calibration Error: An error occurred during calibration of the device.
Algorithm Error: The algorithm used in the transducer block produced an error due to overflow, data reasonableness failure, etc.

Diagnostics

Table 4-5 lists the potential errors and the possible corrective actions for the given values. The corrective actions are in order of increasing system level compromises. The first step should always be to reset the transmitter and then if the error persists, try the steps in Table 4-5. Start with the first corrective action and then try the second.

Table 4-5. Sensor Transducer Block STB.SENSOR_ DETAILED_ STATUS messages

STB.SENSOR_DETAILED_STATUS	Description
Invalid Configuration	Wrong sensor connection with wrong sensor type
ASIC RCV Error	The micro detected a chksum or start/stop bit failure with ASIC communication
ASIC TX Error	The A/D ASIC detected a communication error
ASIC Interrupt Error	ASIC interrupts are too fast or slow
Reference Error	Reference resistors are greater than 25% of known value
ASIC Configuration Error	Citadel registers were not written correctly. (Also CALIBRATION_ERR)
Sensor Open	Open sensor detected
Sensor Shorted	Shorted sensor detected
Terminal Temperature Failure	Open PRT detected
Sensor Out of Operating Range	Sensor readings have gone beyond PRIMRY_VALUE_RANGE values
Sensor beyond operating limits	Sensor readings have gone below 2% of lower range or above 6% of upper range of sensor.
Terminal Temperature Out of Operating Range	PRT readings have gone beyond SECONDARY_VALUE_RANGE values
Terminal Temperature Beyond Operating Limits	PRT readings have gone below 2% of lower range or above 6% of upper range of PRT. (These ranges are calculated and are not the actual range of the PRT which is a PT100 A385)
Sensor Degraded	For RTDs, this is excessive EMF detected. This is thermocouple degradation for thermocouples.
Sensor Error	The user trim has failed due to excessive correction or sensor failure during the trim method

Analog Input (AI) Function Block

Status

Along with the measured or calculated PV value, every FOUNDATION fieldbus block passes an additional parameter called STATUS. The PV and STATUS are passed from the Transducer Block to the Analog Input Block. The STATUS can be one of the following: GOOD, BAD, or UNCERTAIN. When there are no problems detected by the self-diagnostics of the block, the STATUS will be GOOD. If a problem occurs with the hardware in the device, or, the quality of the process variable is compromised for some reason, the STATUS will become either BAD or UNCERTAIN depending upon the nature of the problem. It is important that the Control Strategy that makes use of the Analog Input Block is configured to monitor the STATUS and take action where appropriate when the STATUS is no longer GOOD.

Simulation

⚠ Simulate replaces the channel value coming from the Sensor Transducer Block. For testing purposes, it is possible to manually drive the output of the Analog Input Block to a desired value. There are two ways to do this.

Manual Mode
To change only the OUT_VALUE and not the OUT_STATUS of the AI Block, place the TARGET MODE of the block to MANUAL. Then, change the OUT_VALUE to the desired value.

Simulate

1. If the SIMULATE switch is in the OFF position, move it to the ON position. If the SIMULATE jumper is already in the ON position, you must move it to off and place it back in the ON position.

NOTE
As a safety measure, the switch must be reset every time power is interrupted to the device in order to enable SIMULATE. This prevents a device that is tested on the bench from getting installed in the process with SIMULATE still active.

---

2. To change both the OUT_VALUE and OUT_STATUS of the AI Block, set the TARGET MODE to AUTO.
3. Set SIMULATE_ENABLE_DISABLE to ‘Active’.
4. Enter the desired SIMULATE_VALUE to change the OUT_VALUE and SIMULATE_STATUS_QUALITY to change the OUT_STATUS. If errors occur when performing the above steps, be sure that the SIMULATE jumper has been reset after powering up the device.

Table 4-6. AI BLOCK_ERR Conditions.

Condition Number	Condition Name and Description
0	Other
1	**Block Configuration Error:** the selected channel carries a measurement that is incompatible with the engineering units selected in XD_SCALE, the L_TYPE parameter is not configured, or CHANNEL = zero.
3	**Simulate Active:** Simulation is enabled and the block is using a simulated value in its execution.
7	**Input Failure/Process Variable has Bad Status:** The hardware is bad, or a bad status is being simulated.
14	**Power Up**
15	**Out of Service:** The actual mode is out of service.

Table 4-7. Troubleshooting the AI block

Symptom	Possible Causes	Recommended Actions
Bad or no temperature readings (Read the AI “BLOCK_ERR” parameter)	BLOCK_ERR reads OUT OF SERVICE (OOS)	1. AI Block target mode target mode set to OOS. 2. Resource Block OUT OF SERVICE.
	BLOCK_ERR reads CONFIGURATION ERROR	1. Check CHANNEL parameter (see “CHANNEL” on page 2-9) 2. Check L_TYPE parameter (see “L_TYPE” on page 2-9) 3. Check XD_SCALE engineering units. (see “XD_SCALE and OUT_SCALE” on page 2-10
	BLOCK_ERR reads POWERUP	Download Schedule into block. Refer to host for downloading procedure.
	BLOCK_ERR reads BAD INPUT	1. Sensor Transducer Block Out Of Service (OOS) 2. Resource Block Out of Service (OOS)
	No BLOCK_ERR but readings are not correct. If using Indirect mode, scaling could be wrong.	1. Check XD_SCALE parameter. 2. Check OUT_SCALE parameter. (see “XD_SCALE and OUT_SCALE” on page 2-10)
	No BLOCK_ERR. Sensor needs to be calibrated or Zero trimmed.	See Section 3: Operation and Maintenance to determine the appropriate trimming or calibration procedure.
OUT parameter status reads UNCERTAIN and substatus reads EngUnitRangViolation.	Out_ScaleEU_0 and EU_100 settings are incorrect.	See “XD_SCALE and OUT_SCALE” on page 2-10.

Resource Block

This section describes error conditions found in the Resource block. Read Table 4-8 through Table 4-10 to determine the appropriate corrective action.

Table 4-8. Resource Block BLOCK_ERR messages

Block Errors

Table 4-8 lists conditions reported in the BLOCK_ERR parameter.

Condition Name and Description
Other
Device Needs Maintenance Now
Memory Failure: A memory failure has occurred in FLASH, RAM, or EEPROM memory
Lost NV Data: Non-volatile data that is stored in non-volatile memory has been lost.
Device Needs Maintenance Now
Out of Service: The actual mode is out of service.

Table 4-9. Resource Block SUMMARY_STATUS messages

Condition Name
No repair needed
Repairable
Call Service Center

Table 4-10. Resource Block RB.DETAILED_STATUS

RB.DETAILED_STATUS	Description
Sensor Transducer block error.	Active when any SENSOR_DETAILED_STAUS bit is on
Manufacturing Block integrity error	The manufacturing block size, revision, or checksum is wrong
Hardware/software incompatible	Verify the manufacturing block revision and the hardware revision are correct/compatible with the software revision.
Non-volatile memory integrity error	Invalid checksum on a block of NV data
ROM integrity error	Invalid application code checksum
Lost deferred NV data	Device has been power-cycled while non-volatile writes were being deferred to prevent premature memory failure, the write operations have been deferred.
NV Writes Deferred	A high number of writes has been detected to non-volatile memory. To prevent premature failure, the write operations have been deferred.

LCD Transducer block

This section describes error conditions found in the LCD Transducer Block. Read Table 4-11 and to determine the appropriate corrective action.

Self Test Procedure for the LCD

The SELF_TEST parameter in the Resource block will test LCD segments. When running, the segments of the display should light up for about five seconds.

If your host system supports methods refer to your host documentation on how to run the “Self Test” method. If your host system does not support methods than you can run this test manually be following the steps below.

1. Put Resource block into “OOS” (Out of Service).
2. Go to the parameter called “SELF_TEST” and write the value Self test (0x2).
3. Observe the LCD screen when you are doing this. All of the segments should light up.
4. Put the Resource block back into “AUTO”.

Table 4-11. LCD Transducer Block BLOCK_ERR messages

Condition Name and Description
Other
Out of Service: The actual mode is out of service.

Symptom	Possible Causes	Recommended Action
The LCD displays “DSPLY#INVLID.” Read the BLOCK_ERR and if it says “BLOCK CONFIGURATION” perform the Recommended Action	One or more of the display parameters are not configured properly.	See “LCD Transducer Block” on page 2-16.
The Bar Graph and the AI.OUT readings do not match.	The OUT_SCALE of the AI block is not configured properly.	See “Analog Input (AI) Function Block” on page 2-9 and “Display bar graph” on page 2-18.
“644” is being displayed or not all of the values are being displayed.	The LCD block parameter “DISPLAY_PARAMETER_SELECT is not properly configured.	See “LCD Transducer Block” on page 2-16.
The display reads OOS	The resource and or the LCD Transducer block are OOS.	Verify that both blocks are in “AUTO,”
The display is hard to read.	Some of the LCD segments may have gone bad.	See XXXX (Self Test). If some of the segment is bad, replace the LCD.
	Device is out o the temperature limit for the LCD. (-20 to 80 °C)	Check ambient temperature of the device.

Appendix A Specifications and Reference Data

HART and Foundation Fieldbus Specifications . . . . . page A-1
Foundation Fieldbus Specifications . . . . . page A-4
4–20 mA / HART Specifications . . . . . page A-6
Dimensional Drawings . . . . . page A-10
Ordering Information . . . . . page A-12
Stainless Steel Housing . . . . . page A-18

HART AND FOUNDATION FIELDBUS SPECIFICATIONS

Functional

Inputs
User-selectable; sensor terminals rated to 42.4 VDC. See “Accuracy” on page A-8 for sensor options.

Output
Single 2-wired device with either 4–20 mA/HART, linear with temperature or input; or a completely digital output with FOUNDATION fieldbus communication (ITK 4.5 compliant).

Isolation
Input/output isolation tested to 500 V DC/AC rms (707 V DA) at 50/60 Hz

Local Display
The optional five-digit integral LCD Display includes a floating or fixed decimal point. It can also display engineering units (°F, °C, °R, K, Ω, and millivolts), milliampere, and percent of span. The display can be configured to alternate between selected display options. Display settings are preconfigured at the factory according to the standard transmitter configuration. They can be reconfigured in the field using either HART or FOUNDATION fieldbus communications.

Humidity Limits
0–99% relative humidity

Update Time
≤ 0.5 seconds

Physical

Electrical Connections

Model	Power and Sensor Terminals
644H	Compression screws permanently fixed to terminal block
644R	Compression screw permanently fixed to front panel
WAGO® Spring clamp terminals are optional (option code G5)	

Field Communicator Connections

Communication Terminals	
644H	Clips permanently fixed to terminal block
644R	Clips permanently fixed to front panel

Materials of Construction

Electronics Housing and Terminal Block	
644H	*Noryl*® glass reinforced
644R	*Lexan*® polycarbonate
Enclosure (Option code J5 or J6)	
Housing	Low-copper aluminum
Paint	Polyurethane
Cover O-ring	Buna-N

Mounting

The 644R attaches directly to a wall or a DIN rail. The 644H installs in a connection head or universal head mounted directly on a sensor assembly, apart from a sensor assembly using a universal head, or to a DIN rail using an optional mounting clip.

Weight

Code	Options	Weight
644H	HART, Head Mount Transmitter	96 g (3.39 oz)
644H	FOUNDATION fieldbus, Head Mount Transmitter	92 g (3.25 oz)
644R	HART, Rail Mount Transmitter	174 g (6.14 oz)
M5	LCD Display	38 g (1.34 oz)
J5, J6	Universal Head, Standard Cover	577 g (20.35 oz)
J5, J6	Universal Head, Meter Cover	667 g (23.53 oz)

Enclosure Ratings (644H)

All option codes (S1, S2, S3, S4, J5 and J6) are NEMA 4X, IP66, and IP68. Option code J6 is CSA Enclosure Type 4X.

Performance

EMC (ElectroMagnetic Compatibility) NAMUR NE 21 Standard

The 644H HART meets the requirements for NAMUR NE 21 Rating. (Hardware Rev 26 and later for HART devices.)

Susceptibility	Parameter	Influence
		HART
ESD	• 6 kV contact discharge • 8 kV air discharge	None
Radiated	• 80 – 1000 MHz at 10 V/m AM	< 0.5%
Burst	• 1 kV for I.O.	None
Surge	• 0.5 kV line–line • 1 kV line–ground (I.O. tool)	None
Conducted	• 150 kHz to 80 MHz at 10 V	< 0.5%

CE Mark

The 644 meets all requirements listed under IEC 61326: Amendment 1, 1998.

Power Supply Effect

Less than ±0.005% of span per volt

Stability

RTDs and thermocouples have a stability of ±0.15% of output reading or 0.15 °C (whichever is greater) for 24 months

Self Calibration

The analog-to-digital measurement circuitry automatically self-calibrates for each temperature update by comparing the dynamic measurement to extremely stable and accurate internal reference elements.

Vibration Effect

The 644 is tested to the following specifications with no effect on performance:

Frequency	Vibration
10 to 60 Hz	0.21 mm displacement
60 to 500 Hz	3 g peak acceleration

Sensor Connections

644244EH Sensor Connections Diagram

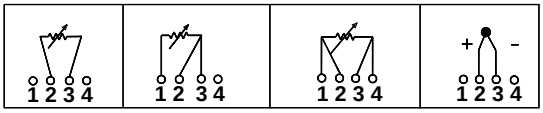

2-wire RTD and Ω	3-wire RTD and Ω*	4-wire RTD and Ω	T/C and mV

* *Rosemount Inc. provides 4-wire sensors for all single element RTDs. You can use these RTDs in 3-wire configurations by leaving the unneeded leads disconnected and insulated with electrical tape.*

Rosemount Conformance to Specifications

A Rosemount product not only meets its published specifications, but most likely exceeds them. Advanced manufacturing techniques and the use of Statistical Process Control provide specification conformance to at least ± 3σ[1]. Our commitment to continual improvement ensures that product design, reliability, and performance will improve annually.

For example, the Reference Accuracy distribution for the 644 is shown to the right. Our Specification Limits are ± 0.15 °C, but, as the shaded area shows, approximately 68% of the units perform three times better than the limits. Therefore, it is very likely that you will receive a device that performs much better than our published specifications.

Conversely, a vendor who "grades" product without using Process Control, or who is not committed to ± 3σ performance, will ship a higher percentage of units that are barely within advertised specification limits.

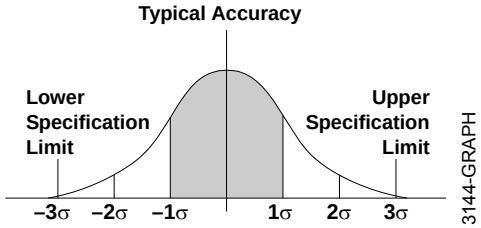

Accuracy distribution shown is for the 644, Pt 100 RTD sensor, Range 0 to 100 °C

(1) Sigma (σ) is a statistical symbol to designate the standard deviation from the mean value of a normal distribution.

FOUNDATION FIELDBUS SPECIFICATIONS

Function Blocks

Resource Block

- The resource block contains physical transmitter information including available memory, manufacture identification, device type, software tag, and unique identification.

Transducer Block

- The transducer block contains the actual temperature measurement data, including sensor 1 and terminal temperature. It includes information about sensor type and configuration, engineering units, linearization, reranging, damping, temperature correction, and diagnostics.

LCD Block

- The LCD block is used to configure the local display, if a LCD Display is being used.

Analog Input (AI)

- Processes the measurement and makes it available on the fieldbus segment
- Allows filtering, alarming, and engineering unit changes.

PID Block

- The transmitter provides control functionality with one PID function block in the transmitter. The PID block can be used to perform single loop, cascade, or feedforward control in the field.

Instantiable Function Blocks

- All the function blocks used by the transmitter are instantiable, meaning the total number of function blocks is only limited by the physical memory available in the transmitter. Since only the instantiable blocks can use physical memory, any combination of function blocks can be used at any given time as long as the physical memory size is not violated.

Block	Execution Time (milliseconds)
Resource	–
Transducer	–
LCD Block	–
Analog Input 1	45
Analog Input 2	45
PID 1	60

Turn-on Time

Performance within specifications in less than 20 seconds after power is applied, when damping value is set to 0 seconds.

Status

If self-diagnostics detect a sensor burnout or a transmitter failure, the status of the measurement will be updated accordingly. Status may also send the PID output to a safe value.

Power Supply

Powered over FOUNDATION fieldbus with standard fieldbus power supplies. The transmitter operates between 9.0 and 32.0 VDC, 11 mA maximum. The power terminals are rated to 42.4 VDC max.

Alarms

The AI function block allows the user to configure the alarms to HI-HI, HI, LO, or LO-LO with a variety of priority levels and hysteresis settings.

Backup Link Active Scheduler (LAS)

The transmitter is classified as a device link master, which means it can function as a Link Active Scheduler (LAS) if the current link master device fails or is removed from the segment.

The host or other configuration tool is used to download the schedule for the application to the link master device. In the absence of a primary link master, the transmitter will claim the LAS and provide permanent control for the H1 segment.

FOUNDATION fieldbus Parameters

Schedule Entries	25(1)
Links	16(1)
Virtual Communications Relationships (VCR)	12(1)

(1) Minimum quantity.

Software Upgrade in the Field

Software for the 644 with FOUNDATION fieldbus will be easy to upgrade in the field. Users will be able to take advantage of software enhancements by loading new application software into the device memory.

4–20 mA / HART SPECIFICATIONS

Communication Requirements

Transmitter power terminals are rated to 42.4 V DC. A Field Communicator requires a loop resistance between 250 – 1100 ohms. The 644 HART device does not communicate when power is below 12 V DC at the transmitter terminals.

Power Supply

An external power supply is required for HART devices. The transmitter operates on 12.0 to 42.4 VDC transmitter terminal voltage with load resistance between 250 and 660 ohms. A minimum of 17.75 VDC power supply is required with a load of 250 ohms. Transmitter power terminals are rated to 42.4 V DC.

Maximum Load = 40.8 x (Supply Voltage – 12.0)

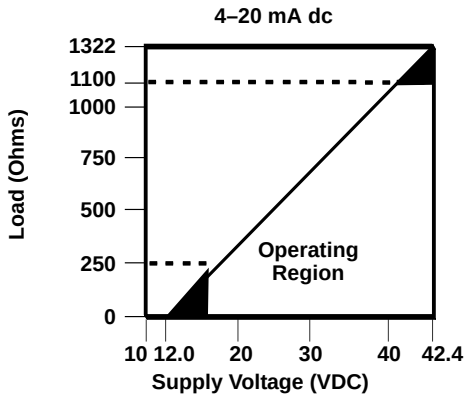

Temperature Limits

	Operating Limit	Storage Limit
With LCD Display	–4 to 185 °F –20 to 85 °C	–50 to 185 °F –45 to 85 °C
Without LCD Display	–40 to 185 °F –40 to 85 °C	–58 to 248 °F –50 to 120 °C

Hardware and Software Failure Mode

The 644 features software driven alarm diagnostics. The independent circuit is designed to provide backup alarm output if the microprocessor software fails. The alarm directions (HIGH/LO) are user-selectable using the failure mode switch. If failure occurs, the position of the switch determines the direction in which the output is driven (HI or LO). The switch feeds into the digital-to-analog (D/A) converter, which drives the proper alarm output even if the microprocessor fails. The values at which the transmitter drives its output in failure mode depends on whether it is configured to standard, custom, or NAMUR-compliant (NAMUR recommendation NE 43, June 1997) operation. Table 1 shows the alarm ranges available for the device to be configured to.

TABLE 1. Available Alarm Range(1)

	Standard	NAMUR- NE 43 Compliant
Linear Output:	$3.9 \leq I^{(2)} \leq 20.5$	$3.8 \leq I \leq 20.5$
Fail High:	$21 \leq I \leq 23$	$21 \leq I \leq 23$
Fail Low:	$3.5 \leq I \leq 3.75$	$3.5 \leq I \leq 3.6$

(1) Measured in milliamperes.
(2) I = Process Variable (current output).

Custom Alarm and Saturation Level

Custom factory configuration of alarm and saturation level is available with option code C1 for valid values. These values can also be configured in the field using a Field Communicator.

Turn-on Time

Performance within specifications in less than 5.0 seconds after power is applied, when damping value is set to 0 seconds.

Transient Protection

The Rosemount 470 prevents damage from transients induced by lightning, welding, or heavy electrical equipment. For more information, refer to the 470 Product Data Sheet (document number 00813-0100-4191).

Accuracy

TABLE 2. Rosemount 644 Input Options and Accuracy.

Sensor Options	Sensor Reference	Input Ranges		Recommended Min. Span[1]		Digital Accuracy[2]		D/A Accuracy[3]
2-, 3-, 4-wire RTDs		°C	°F	°C	°F	°C	°F	
Pt 100	IEC 751, 1995 (α = 0.00385)	–200 to 850	–328 to 1562	10	18	± 0.15	± 0.27	±0.03% of span
Pt 100	JIS 1604, 1981 (α = 0.003916)	–200 to 645	–328 to 1193	10	18	± 0.15	± 0.27	±0.03% of span
Pt 200	IEC 751, 1995 (α = 0.00385)	–200 to 850	–328 to 1562	10	18	± 0.27	± 0.49	±0.03% of span
Pt 500	IEC 751, 1995 (α = 0.00385)	–200 to 850	–328 to 1562	10	18	± 0.19	± 0.34	±0.03% of span
Pt 1000	IEC 751, 1995 (α = 0.00385)	–200 to 300	–328 to 572	10	18	± 0.19	± 0.34	±0.03% of span
Ni 120	Edison Curve No. 7	–70 to 300	–94 to 572	10	18	± 0.15	± 0.27	±0.03% of span
Cu 10	Edison Copper Winding No. 15	–50 to 250	–58 to 482	10	18	±1.40	± 2.52	±0.03% of span
Thermocouples[4]								
Type B[5]	NIST Monograph 175, IEC 584	100 to 1820	212 to 3308	25	45	± 0.77	± 1.39	±0.03% of span
Type E	NIST Monograph 175, IEC 584	–50 to 1000	–58 to 1832	25	45	± 0.20	± 0.36	±0.03% of span
Type J	NIST Monograph 175, IEC 584	–180 to 760	–292 to 1400	25	45	± 0.35	± 0.63	±0.03% of span
Type K[6]	NIST Monograph 175, IEC 584	–180 to 1372	–292 to 2502	25	45	± 0.50	± 0.90	±0.03% of span
Type N	NIST Monograph 175, IEC 584	–200 to 1300	–328 to 2372	25	45	± 0.50	± 0.90	±0.03% of span
Type R	NIST Monograph 175, IEC 584	0 to 1768	32 to 3214	25	45	± 0.75	± 1.35	±0.03% of span
Type S	NIST Monograph 175, IEC 584	0 to 1768	32 to 3214	25	45	± 0.70	± 1.26	±0.03% of span
Type T	NIST Monograph 175, IEC 584	–200 to 400	–328 to 752	25	45	± 0.35	± 0.63	±0.03% of span
DIN Type L	DIN 43710	–200 to 900	–328 to 1652	25	45	± 0.35	± 0.63	±0.03% of span
DIN Type U	DIN 43710	–200 to 600	–328 to 1112	25	45	± 0.35	± 0.63	±0.03% of span
Type W5Re/W26Re	ASTM E 988-96	0 to 2000	32 to 3632	25	45	± 0.70	± 1.26	±0.03% of span
Millivolt Input		–10 to 100 mV		3 mV		±0.015 mV		±0.03% of span
2-, 3-, 4-wire Ohm Input		0 to 2000 ohms		20 ohm		±0.45 ohm		±0.03% of span

(1) No minimum or maximum span restrictions within the input ranges. Recommended minimum span will hold noise within accuracy specification with damping at zero seconds.
(2) The published digital accuracy applies over the entire sensor input range. Digital output can be accessed by HART or Foundation fieldbus Communications or Rosemount control system.
(3) Total Analog accuracy is the sum of digital and D/A accuracies.
(4) Total digital accuracy for thermocouple measurement: sum of digital accuracy +0.5 °C.
(5) Digital accuracy for NIST Type B T/C is ±3.0 °C (±5.4 °F) from 100 to 300 °C (212 to 572 °F).
(6) Digital accuracy for NIST Type K T/C is ±0.70 °C (±1.26 °F) from –180 to –90 °C (–292 to –130 °F).

Accuracy Example (HART devices)

When using a Pt 100 (α = 0.00385) sensor input with a 0 to 100 °C span:

- Digital accuracy = ±0.15 °C
- D/A accuracy = ±0.03% of 100 °C or ±0.03 °C
- Total accuracy = ±0.18 °C.

Accuracy Example (FOUNDATION fieldbus devices)

When using a Pt 100 (α = 0.00385) sensor input:

- Total accuracy = ±0.15 °C.
- No D/A accuracy effects apply

Ambient Temperature Effect

TABLE 3. Ambient Temperature Effect

Sensor Options	Temperature Effects per 1.0 °C (1.8 °F) Change in Ambient Temperature[1]	Range	D/A Effect
2-, 3-, 4-wire RTDs			
Pt 100 ((α = 0.00385)	0.003 °C (0.0054 °F)	Entire Sensor Input Range	0.001% of span
Pt 100 (α = 0.003916)	0.003 °C (0.0054 °F)	Entire Sensor Input Range	0.001% of span
Pt 200	0.004 °C (0.0072 °F)	Entire Sensor Input Range	0.001% of span
Pt 500	0.003 °C (0.0054 °F)	Entire Sensor Input Range	0.001% of span
Pt 1000	0.003 °C (0.0054 °F)	Entire Sensor Input Range	0.001% of span
Ni 120	0.003 °C (0.0054 °F)	Entire Sensor Input Range	0.001% of span
Cu 10	0.03 °C (0.054 °F)	Entire Sensor Input Range	0.001% of span
Thermocouples			
Type B	0.014 °C	R ≥ 1000°C	0.001% of span
	0.032 °C – (0.0025% of (R – 300))	300 °C ≤ R < 1000 °C	0.001% of span
	0.054 °C – (0.011% of (R – 100))	100 °C ≤ R< 300 °C	0.001% of span
Type E	0.005 °C +(0.00043% of R)	All	0.001% of span
Type J	0.0054 °C +(0.0029%of R)	R ≥ 0 °C	0.001% of span
	0.0054 °C + (0.0025% of absolute value R)	R < 0 °C	0.001% of span
Type K	0.0061 °C +(0.00054% of R)	R ≥ 0 °C	0.001% of span
	0.0061 °C + (0.0025% of absolute value R)	R < 0 °C	0.001% of span
Type N	0.0068 °C +(0.00036% of R)	All	0.001% of span
Type R, S, W5Re/W26Re	0.016 °C	R ≥ 200°C	0.001% of span
	0.023 °C – (0.0036% of R)	R < 200 °C	0.001% of span
Type T	0.0064 °C	R ≥ 0 °C	0.001% of span
	0.0064 °C +(0.0043% of absolute value R)	R < 0 °C	0.001% of span
DIN Type L	0.0054 °C + (0.00029% of R)	R ≥ 0 °C	0.001% of span
	0.0054 °C +(0.0025% of absolute value R)	R < 0 °C	0.001% of span
DIN Type U	0.0064 °C	R ≥ 0 °C	0.001% of span
	0.0064 °C +(0.0043% of absolute value R)	R < 0 °C	0.001% of span
Millivolt Input	0.0005 mV	Entire Sensor Input Range	0.001% of span
2-, 3-, 4-wire Ohm	0.0084 Ω	Entire Sensor Input Range	0.001% of span

(1) Change in ambient is with reference to the calibration temperature of the transmitter 68 °F (20 °C) from factory.

Transmitters can be installed in locations where the ambient temperature is between –40 and 85 °C (–40 and 185 °F). In order to maintain excellent accuracy performance, each transmitter is individually characterized over this ambient temperature range at the factory.

Temperature Effects Example (HART devices)

When using a Pt 100 (α = 0.00385) sensor input with a 0–100 °C span at 30 °C ambient temperature:

- Digital Temperature Effects: 0.003 °C x (30 - 20) = 0.03 °C
- D/A Effects: [0.001% of 100] x (30 - 20) = 0.01 °C
- Worst Case Error: Digital + D/A + Digital Temperature Effects + D/A Effects = 0.15 °C + 0.03 °C + 0.03 °C + 0.01 °C = 0.22 °C
- Total Probable Error: $\sqrt{0.15^2 + 0.03^2 + 0.03^2 + 0.01^2} = 0.16°C$

Temperature Effects Examples (FOUNDATION fieldbus devices)

When using a Pt 100 (α = 0.00385) sensor input at 30 °C span at 30 °C ambient temperature:

- Digital Temperature Effects: 0.003 °C x (30 - 20) = 0.03 °C
- D/A Effects: No D/A effects apply
- Worst Case Error: Digital + Digital Temperature Effects = 0.15 °C + 0.03 °C = 0.18 °C
- Total Probable Error: $\sqrt{0.15^2 + 0.03^2} = 0.153°C$

DIMENSIONAL DRAWINGS

644H (DIN A Head Mount)

Shown with Standard Compression Screw Terminals

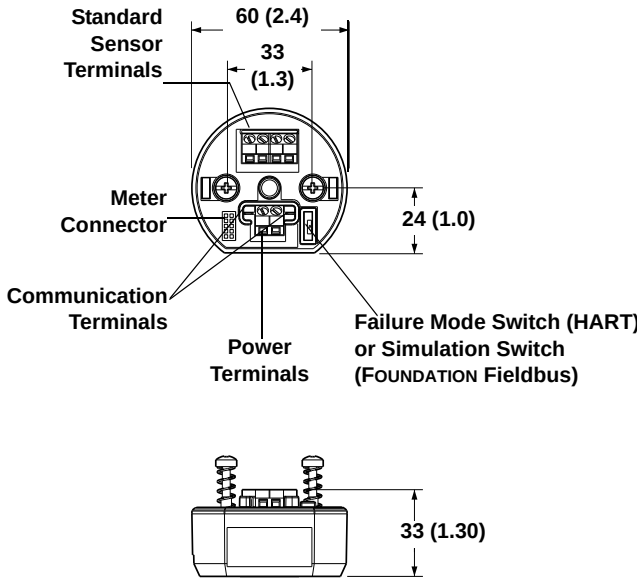

Shown with WAGO® Spring Clamp Terminals

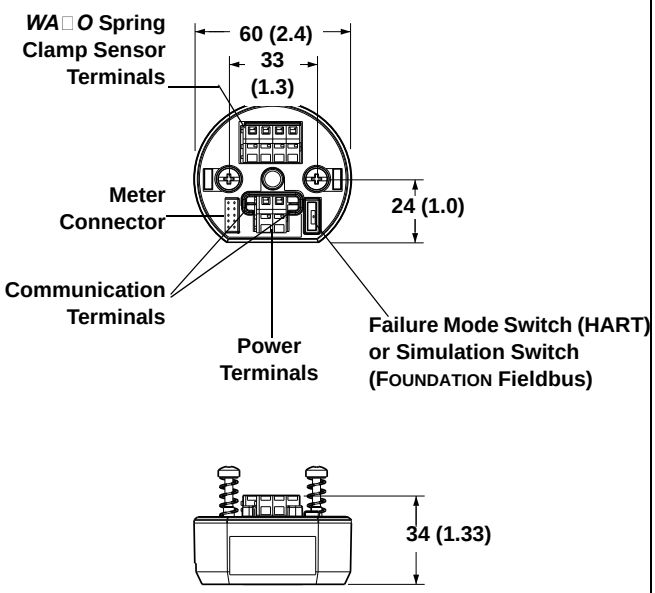

Threaded-Sensor Universal Head (Option code J5 or J6)

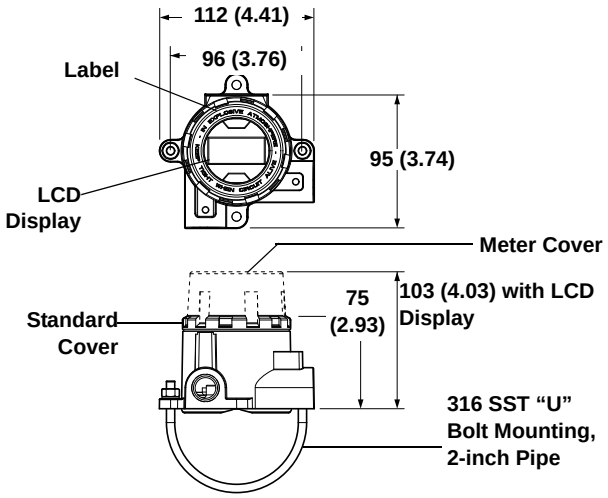

Note: A "U" Bolt is shipped with each universal head unless assembly option X1, X2, or X3 is ordered. Since the head is integrally mounted to the sensor, it may not need to be used.

Integral DIN Style Sensor Connection Head

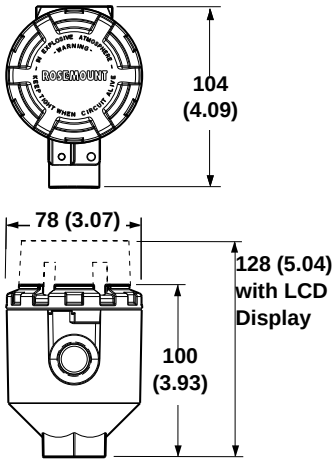

Note: The DIN Style Integral sensor connection head is only available through Volume 2 of the Rosemount Temperature Sensors and Accessories Product Data Sheet (document number 00810-0101-2654).

Dimensions are in millimeters (inches)

644 Rail Mount

HART Protocol Only

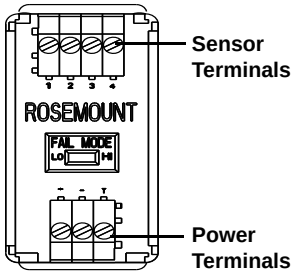

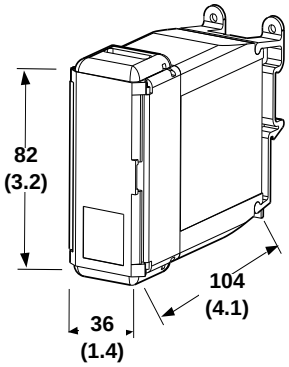

LCD Display

Head Mount Transmitter

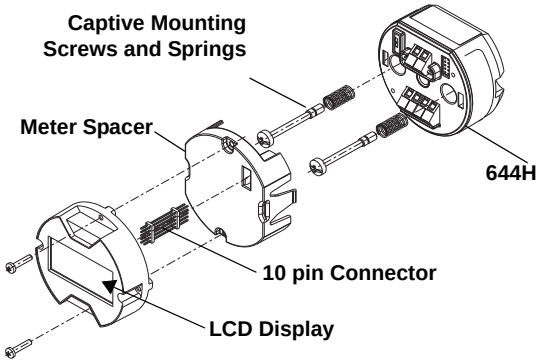

Mounting

G-Rail (asymmetric)

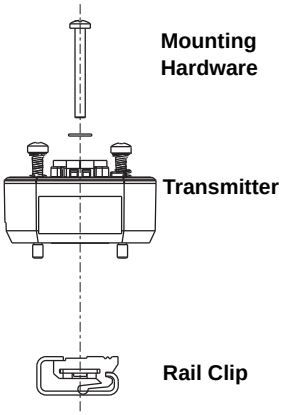

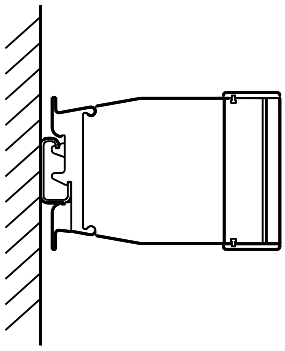

Top Hat Rail (symmetric)

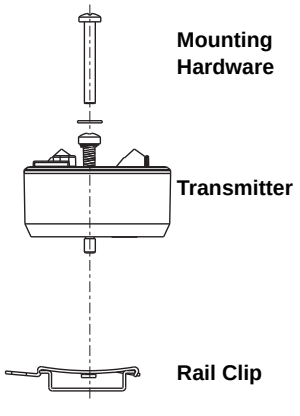

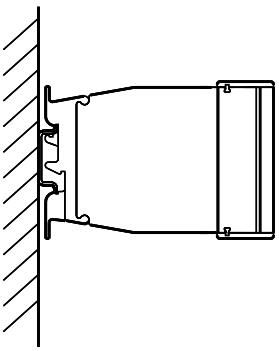

Note: Kit (part number 00644-5301-0010) includes mounting hardware and both types of rail kits.

Universal Clip for Mounting to a Wall or a Rail (part number 03044-4103-0001)

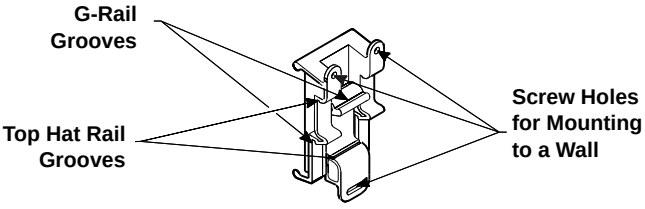

644H Retrofit Kit

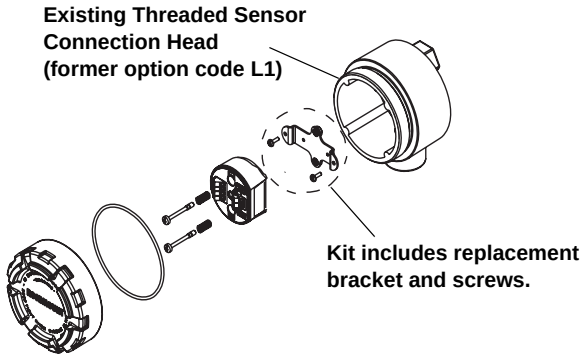

Note: Kit (part number 00644-5321-0010) includes a new mounting bracket and the hardware necessary to facilitate the installation.

ORDERING INFORMATION

Table A-1. Rosemount 644 Smart Temperature Transmitter Ordering Information

★ The Standard offering represents the most common models and options. These options should be selected for best delivery. The Expanded offering is manufactured after receipt of order and is subject to additional delivery lead time.

● = Available
– = Not Available

Model	Product Description							
644	Smart Temperature Transmitter							
Transmitter Type								
Standard								**Standard**
H	Head Mount (suitable for mounting in the field with enclosure options below)							★
R	Rail Mount							★
Output		**Head**			**Rail**			
Standard								**Standard**
A	4–20 mA with Digital Signal based on HART protocol	●			●			★
F	FOUNDATION fieldbus digital signal (includes 2 AI function blocks and Backup Link Active Scheduler)	●			–			★
W	Profibus PA digital signal	●			–			★
Product Certifications								
Hazardous Locations Certificates (consult factory for availability)		**A**	**F**	**W**	**A**	**F**	**W**	
Standard								**Standard**
E5(1)	FM Explosion–Proof	●	●	●	–	–	–	★
I5(2)	FM Intrinsic Safety (includes standard I.S. and FISCO for fieldbus units)	●	●	●	●	–	–	★
K5(2)	FM Intrinsic Safety and Explosion–Proof combination (includes standard I.S. and FISCO for fieldbus units)	●	●	●	–	–	–	★
KC	FM/CSA Intrinsic Safety and Non-incendive Approval	●	●	●	–	–	–	★
I6(2)	CSA Intrinsic Safety (includes standard I.S. and FISCO for fieldbus units)	●	●	●	–	–	–	★
K6(1)(3)	CSA Intrinsic Safety and Explosion–Proof combination (includes standard I.S. and FISCO for fieldbus units)	●	●	●	–	–	–	★
I3	NEPSI Intrinsic Safety	●	●	●	–	–	–	★
E3	NEPSI Flameproof	●	●	●	–	–	–	★
E1(1)	ATEX Flameproof	●	●	●	–	–	–	★
N1(1)	ATEX Type n	●	●	●	–	–	–	★
NC	ATEX Type n Component	●	●	●	●	–	–	★
ND(1)	ATEX Dust Ignition–Proof	●	●	●	–	–	–	★
I1(2)	ATEX Intrinsic Safety (includes standard I.S. and FISCO for fieldbus units)	●	●	●	●	–	–	★
E7(1)	IECEx Flameproof and Dust	●	●	●	–	–	–	★
I7(3)(2)	IECEx Intrinsic Safety (includes standard I.S. and FISCO for fieldbus units)	●	●	●	●	–	–	★
N7(1)(3)	IECEx Type n	●	●	●	–	–	–	★
NG	IECEx Type n Component	●	●	●	●	–	–	★
E4(1)(3)	TIIS Explosion–Proof	●	●	●	●	–	–	★
E2	INMETRO Flameproof	●	●	●	–	–	–	★
NA	No approval	●	●	●	●	–	–	★
OPTIONS		**A**	**F**	**W**	**A**	**F**	**W**	
Plant Web Software Functionality								
Standard								**Standard**
A01	Regulatory Control Suite – 1 PID Block	–	●	–	–	–	–	★
Assembly								
Standard								**Standard**
XA	Sensor specified separately and assembled to transmitter	●	●	●	–	–	–	★

Table A-1. Rosemount 644 Smart Temperature Transmitter Ordering Information

★ The Standard offering represents the most common models and options. These options should be selected for best delivery. The Expanded offering is manufactured after receipt of order and is subject to additional delivery lead time.

● = Available
– = Not Available

		Head			Rail			
		A	F	W	A	F	W	
Enclosure								
Standard								**Standard**
J5[4][5]	Universal Head (junction box), aluminum alloy with 50.8 mm (2-in.) SST pipe bracket (M20 entries)	●	●	●	–	–	–	★
J6[3]	Universal Head (junction box), aluminum alloy with 50.8 mm (2-in.) SST pipe bracket (1/2–14 NPT entries)	●	●	●	–	–	–	★
J7[3][5]	Universal Head (junction box), cast SST with 50.8 mm (2-in.) SST pipe bracket (M20 entries)	●	●	●	–	–	–	★
J8[3]	Universal Head (junction box), cast SST with 50.8 mm (2-in.) SST pipe bracket (1/2–14 NPT entries)	●	●	●	–	–	–	★
Expanded								
S1	Connection Head, Polished Stainless Steel (1/2–14 NPT entries)	●	●	●	–	–	–	
S2	Connection Head, Polished Stainless Steel (1/2–14 NPSM entries)	●	●	●	–	–	–	
S3	Connection Head, Polished Stainless Steel (M20 x 1.5 conduit and entries)	●	●	●	–	–	–	
S4	Connection Head, Polished Stainless Steel (M20 x 1.5 conduit entries, M24 x 1.5 head entry)	●	●	●	–	–	–	
Local Display (644H only)								
Standard								**Standard**
M5	LCD Display	●	●	●	–	–	–	★
Expanded								
M6	LCD Display with Polycarbonate Meter Face	●	●	●	–	–	–	
Configuration								
Standard								**Standard**
C1	Factory configuration date, descriptor, and message fields (CDS, document number 00806-0100-4728 required).	●	●	●	●	–	–	★
Analog Output								
Standard								**Standard**
A1	Analog output levels compliant with NAMUR-recommendations NE 43: June 1997: high alarm configuration	●	–	–	●	–	–	★
CN	Analog output levels compliant with NAMUR-recommendations NE 43: June 1997: low alarm configuration	●	–	–	●	–	–	★
C8	Low Alarm (standard Rosemount alarm and saturation values)	●	–	–	●	–	–	★
Filter								
Standard								**Standard**
F6	60 Hz line voltage filter	●	●	●	●	–	–	★
Trim								
Standard								**Standard**
C2	Transmitter-sensor matching, trim to specific Rosemount RTD calibration schedule (CVD constants)	●	●	●	●	–	–	★
Calibration Option								
Standard								**Standard**
C4	5-point calibration. *Use option code Q4 to generate a calibration certificate*	●	●	●	●	–	–	★
Q4	Calibration certificate. *3-Point calibration with certificate*	●	●	●	●	–	–	★

Table A-1. Rosemount 644 Smart Temperature Transmitter Ordering Information

★ The Standard offering represents the most common models and options. These options should be selected for best delivery. The Expanded offering is manufactured after receipt of order and is subject to additional delivery lead time.

● = Available
– = Not Available

		Head			Rail			
		A	F	W	A	F	W	
Accessory Options								
Standard								**Standard**
G1	External ground lug assembly(6) (see “External Ground Screw Assembly” on page A-15)	●	●	●	–	–	–	★
G2	Cable gland(7), EEx d, Brass, 7.5 mm - 11.99 mm	●	●	●	–	–	–	★
G7	Cable gland, M20x1.5, EEx e, Blue, Polyamide, Diam 5-9mm	●	●	●	–	–	–	★
G3	Cover chain. *Only available with enclosure option codes J5 or J6. Not available with LCD Display option code M5.*	●	●	●	–	–	–	★
G5	*WAGO* spring clamp terminals	●	●	●	–	–	–	★
Interlinkbt Connector								
Standard								**Standard**
GE(8)	Eurofast® Interlinkbt Connector	●	●	●	–	–	–	★
GM(8)	Minifast® Interlinkbt Connector	●	●	●	–	–	–	★
External Label								
Standard								**Standard**
EL	External label for ATEX Intrinsic Safety	●	●	●	–	–	–	★
Typical Rail Mount Model Number: 644 R A I5 **Typical Head Mount Model Number: 644 H F I5 M5 J5 C1**								

(1) Requires enclosure option J5, J6, J7 or J8.
(2) When IS approval is ordered on a FOUNDATION fieldbus, both standard IS and FISCO IS approvals apply. The device label is marked appropriately.
(3) Consult factory for availability.
(4) Suitable for remote mount configuration.
(5) When ordered with XA, 1/2" NPT enclosure will come equipped with an M20 adapter with the sensor installed as process ready.
(6) Only available with Enclosure option code J5 or J6. For ATEX approved units the Ground Lug Assembly is included. It is not necessary to include code G1 for units with ATEX approvals.
(7) Only available with Enclosure option code J5.
(8) Available with Intrinsically Safe approvals only. For FM Intrinsically Safe or non-incendive approval (option code I5), install in accordance with Rosemount drawing 03151-1009 to maintain NEMA 4X rating.

NOTE

For additional options (e.g. “K” codes), please contact your local Emerson Process Management representative.

Tagging

Hardware

- Order with C1 option
- 13 characters total
- Tags are adhesive labels
- Permanently attached to transmitter
- Character height is 1/16-in (1.6 mm)

Software

- Order with C1 option
- The transmitter can store up to 13 characters for FOUNDATION fieldbus and Profibus PA or 8 for HART protocol. If no characters are specified, the first 8 characters of the hardware tag are the default.

Considerations

Special Mounting Considerations

See “Mounting” on page A-11 for the special hardware that is available to:

- Mount a 644H to a DIN rail. (see Table 4 on page A-15)
- Retrofit a new 644H to replace an existing 644H transmitter in an existing threaded sensor connection head.(see Table 4 on page A-15)

External Ground Screw Assembly

The external ground screw assembly can be ordered by specifying code G1 when an enclosure is specified. However, some approvals include the ground screw assembly in the transmitter shipment, hence it is not necessary to order code G1. The table below identifies which approval options include the external ground screw assembly and which do not.

Approval Type	External Ground Screw Assembly Included?
E5, I1, I2, I5, I6, I7, K5, K6, NA, I4	No–Order option code G1
E1, E2, E3, E4, E7, K7, N1, N7, ND	Yes

TABLE 4. Transmitter Accessories

Part Description	Part Number
Aluminum alloy Universal Head, standard cover—M20 entries	00644-4420-0002
Aluminum alloy Universal Head, meter cover—M20 entries	00644-4420-0102
Aluminum alloy Universal Head, standard cover—1/2-14 NPT entries	00644-4420-0001
Aluminum alloy Universal Head, meter cover—1/2-14 NPT entries	00644-4420-0101
LCD Display (includes meter and meter spacer assembly)	00644-4430-0002
LCD Display kit (includes meter and meter spacer assembly, and meter cover)	00644-4430-0001
Ground screw assembly kit	00644-4431-0001
Kit, Hardware for mounting a 644H to a DIN rail (includes clips for symmetrical and asymmetrical rails)	00644-5301-0010
Kit, Hardware for retrofitting a 644H in an existing threaded sensor connection head (former option code L1)	00644-5321-0010
Kit, 316 U-Bolt for Universal Housing	00644-4423-0001
Universal clip for rail or wall mount	03044-4103-0001
24 Inches of symmetric (top hat) rail	03044-4200-0001
24 Inches of asymmetric (G) Rail	03044-4201-0001
Ground clamp for symmetric or asymmetric rail	03044-4202-0001
End clamp for symmetric or asymmetric rail	03044-4203-0001
Snap rings kit (used for assembly to a DIN sensor – quantity 12)	00644-4432-0001
SST Universal Head, standard cover—M20 entries	00644-4433-0002
SST Universal Head, meter cover—M20 entries	00644-4433-0102

TABLE 4. Transmitter Accessories

Part Description	Part Number
SST Universal Head, standard cover—1/2-14 NPT entries	00644-4433-0001
SST Universal Head, meter cover—1/2-14 NPT entries	00644-4433-0101
Polished SST Connection Head, standard cover—1/2-14 NPT entries	00079-0312-0011
Polished SST Connection Head, meter cover—1/2-14 NPT entries	00079-0312-0111
Polished SST Connection Head, standard cover—1/2-14 NPSM entries	00079-0312-0022
Polished SST Connection Head, meter cover—1/2-14 NPSM entries	00079-0312-0122
Polished SST Connection Head, standard cover—M20 x 1.5 entries	00079-0312-0033
Polished SST Connection Head, meter cover—M20 x 1.5 entries	00079-0312-0133
Polished SST Connection Head, standard cover—M20 x 1.5 / M24 x 1.5 entries	00079-0312-0034
Polished SST Connection Head, meter cover—M20 x 1.5 / M24 x 1.5 entries	00079-0312-0134

Configuration

Transmitter Configuration

The transmitter is available with standard configuration setting for either HART (see “Standard HART Configuration”) or FOUNDATION fieldbus (see “Standard Foundation fieldbus Configuration”). The configuration settings and block configuration may be changed in the field with DeltaV®, with AMS*inside*, or other FOUNDATION fieldbus host or configuration tool.

Custom Configuration

Custom configurations are to be specified when ordering. This configuration must be the same for all sensors. The following table lists the necessary requirements to specify a custom configuration.

	Option Code	Requirements/ Specification
	C1: Factory Configuration Data (CDS required)	Date: day/month/year Descriptor: 16 alphanumeric characters Message: 32 alphanumeric character Analog Output: Alarm and saturation levels
	C2:Transmitter – Sensor Matching	The transmitters are designed to accept Callendar-Van Dusen constants from a calibrated RTD. Using these constants, the transmitter generates a custom curve to match the sensor-specific curve. Specify a Series 65, 65, or 78 RTD sensor on the order with a special characterization curve (V or X8Q4 option). These constants will be programmed into the transmitter with this option
HART only	A1: NAMUR-Compliant, High Alarm	High Alarm = 21.5 mA Upscale Saturation = 20.5 mA
HART only	CN: NAMUR-Compliant, Low Alarm	Low Alarm = 3.6 mA Downscale Saturation = 3.8 mA
	C4: Five Point Calibration	Will include 5-point calibration at 0, 25, 50, 75, and 100% analog and digital output points. Use with Calibration Certificate Q4.
	F6: 60 Hz Line Filter	Calibrated to a 60 Hz line voltage filter instead of 50 Hz filter

Standard HART Configuration

Unless specified, the transmitter will be shipped as follows:

Sensor Type	RTD, Pt 100 (α=0.00385, 4-wire)
4 mA Value	0 °C
20 mA Value	100 °C
Damping	5 seconds
Output	Linear with temperature
Failure/Saturation Modes	High (21.75 mA) / Upscale (20.5 mA)
Line Voltage Filter	50 Hz
Tag	Configuration Data Sheet requires

Standard FOUNDATION fieldbus Configuration

Unless otherwise specified, the transmitter will be shipped as follows for all sensors:

Sensor Type: 4-wire Pt 100 (α = 0.00385) RTD
Damping: 5 seconds
Units of Measurement: °C
Line Voltage Filter: 50 Hz
Software Tag: See “Tagging” on page A-15
Function Blocks Tags: • Resource Block: RB • Transducer Block: TB • LCD Block: LCD • Analog Input Blocks: AI1, AI2
Alarm Range: 0
Alarm Limits of AI1 and AI2: • HI-HI: 100 °C (212 °F) • HI: 95 °C (203 °F) • LO: 5 °C (41 °F) • LO-LO: 0 °C (32 °F)
Local Display (when installed): Engineering Units of Temperature

Standard Block Configuration

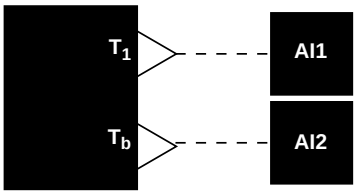

Note:
T_1 = Sensor Temperature
T_b = Terminal Temperature

Final Station

AI Blocks are scheduled for 1 second. AI Blocks are linked as shown above.

STAINLESS STEEL HOUSING

The Stainless Steel Housing is ideal for Biotechnology, Pharmaceutical Industries, and Sanitary Applications

Weight

Option Code	Standard Cover	Meter Cover
S1	840 g (27 oz)	995 g (32 oz)
S2	840 g (27 oz)	995 g (32 oz)
S3	840 g (27 oz)	995 g (32 oz)
S4	840 g (27 oz)	995 g (32 oz)

Enclosure Rating

NEMA 4X, IP66, and IP68

Materials of Construction

Housing and Standard Meter Cover

- 316L SST

Cover O-Ring

- Buna-N

LCD Display Cover

- 316L SST
- Glass

Surface

Surface finish is polished to 32 RMA. Laser etched product marking on housing and standard covers.

Dimensional Drawings

Sanitary Housing Covers

Standard Cover

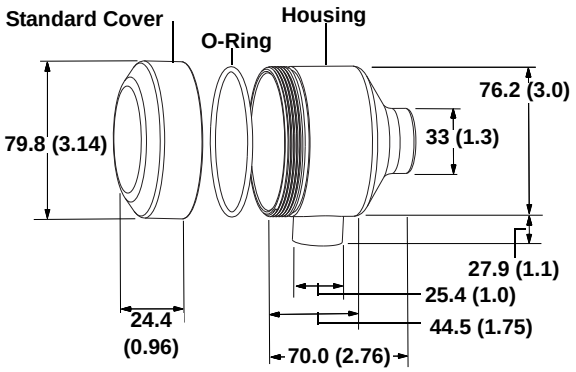

LCD Display Cover

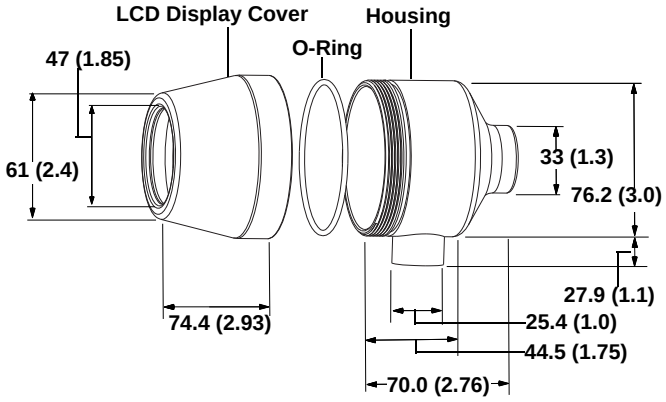

Dimensions are in millimeters (inches)

Appendix B Product Certifications

Approved Manufacturing Locations . . . . . page B-1
European Union Directive Information . . . . . page B-1
Hazardous Locations Certificates . . . . . page B-2
Installation Drawings . . . . . page B-10

APPROVED MANUFACTURING LOCATIONS

Emerson Process Management Rosemount Division. – Chanhassen, Minnesota, USA

Rosemount Temperature GmbH – Germany

Emerson Process Management Asia Pacific – Singapore

EUROPEAN UNION DIRECTIVE INFORMATION

The EC declaration of conformity for all applicable European directives for this product can be found on the Rosemount website at www.rosemount.com. A hard copy may be obtained by contacting our local sales representative.

ATEX Directive (94/9/EC)

Rosemount Inc. complies with the ATEX Directive.

Electro Magnetic Compatibility (EMC) (89/336/EEC)

644H and 644R – EN 50081-1: 1992; EN 50082-2:1995;
EN 61326-1:1997 +AI

HAZARDOUS LOCATIONS CERTIFICATES

Rosemount 644 with FOUNDATION fieldbus

The product certifications for the Rosemount 644 with FOUNDATION fieldbus are pending. Consult the factory for additional information.

North American Certifications

Factory Mutual (FM) Approval

I5 FM Intrinsic Safety
Intrinsically Safe (Entity) / FISCO for use in Class I/II/III, Division 1, Groups A, B, C, D, E, F, and G; when installed per control drawing 00644-2075.
Temperature Code: T4A (T_{amb} = – 50 °C to 40 °C).

Nonincendive for use in Class I, Division 2, Groups A, B, C, and D.
Temperature Code: T6 (T_{amb} = – 50 °C to 70 °C);
T5 (T_{amb} = – 50 °C to 85 °C)

E5 FM Explosion-Proof:
Explosion-Proof for Class I, Division 1, Groups B, C, and D. Dust Ignition Proof for Class II/III, Division 1, Groups E, F, G when installed per Rosemount Drawing 00644-1049.
Temperature Code: T5 (T_{amb}= –50°C to 85°C)

Canadian Standards Association (CSA) Approval

I6 CSA Intrinsic Safety
Intrinsically Safe for Class I, Division 1, Groups A,B,C, and D when installed in accordance with Rosemount drawing 00644-2076.
Temperature Code: T4 (T_{amb} = –50 °C to 60 °C)

K6 CSA Intrinsic Safety, Explosion–Proof, and Non-incendive.
Combination of I6 and Explosion–proof for Class I, Division 1, Groups B, C, and D; Dust-ignition proof for Class II, Division 1, Groups E, F, and G; Class III, Division 1 hazardous locations, when installed in accordance with Rosemount drawing 00644–1059.
Temperature Code: T4 (T_{amb} = –50 °C to 85 °C)
Suitable for Class I, Division 2, Groups B, C, and D when installed in a suitable enclosure.
Temperature Code: Temperature Code: T4 (T_{amb} = –50 °C to 60 °C);
T5 (T_{amb} = –50 °C to 85 °C)

NOTE

K6 is only available with 644H option code J6.

European Certifications

ATE□ A□□ro□al□

E1 ATEX Flame Proof
Certificate Number: KEMA99ATEX8715
ATEX Marking: Ⓔx II 2 G
CE 1180
EEx d IIC T6 (–40 °C ≤ T_{amb} ≤ 65 °C)
U_i = 55 Vdc
I_i = 24.0 mA

I1 ATEX Intrinsic Safety/FISCO
Certificate Number: Baseefa03ATEX0499X
ATEX Marking: Ⓔx II 1 G
CE 1180
EEx ia IIC T4 (–50 °C ≤ Tamb ≤ 60 °C)

TABLE 1. Entity Parameters

I.S. Power/Loop	FISCO	Sensor
Intrinsic Safety		
U_i = 30 V	U_i = 17.5 V	U_i = 13.9 V
I_i = 300 mA	I_i = 380 mA	I_i = 23 mA
P_i = 1.3 W	P_i = 5.32 W	P_i = 79 mW
C_i = 2.1 nF	C_i = 2.1 nF	C_i = 7.7 nF
L_i = 0	L_i = 0	L_i = 0

Special Conditions for Safe Use (X):

The apparatus must be installed in an enclosure which affords it a degree of protection of at least IP20. Non-metallic enclosures must have a surface resistance of less than 1Ω., light alloy or zirconium enclosures must be protected from impact and friction when installed.

N1 ATEX Type n
Certificate Number: BAS00ATEX3145
ATEX Marking: Ⓔx II 3 G
EEx nL IIC T5(-40 °C ≤ Tamb ≤ 70 °C)
Max Input Voltage: U_i = 45 VDC

NC ATEX Type n Component
Certificate Number: BAS99ATEX3084U
ATEX Marking: Ⓔx II 3 G
EEx nL IIC T5 (-40 °C ≤ Tamb ≤ 70 °C)

Special Conditions for Safe Use (X):
The equipment must be installed in an enclosure meeting the requirements of IP54 and the requirements of the impact tests described in EN 50021.

ND ATEX Dust Ignition-Proof
Certificate Number: KEMA99ATEX8715
ATEX Marking: Ⓔx II 1 D
CE 1180
T95°C (-40°C < Tamb < +85°C)
IP66
Max Input: U_i = 55 Vdc
I_i = 24 mA

IECEx Certifications

E7 IECEx Flameproof and Dust
Certificate Number: IECEx KEM 09.0015X
Ex d IIC T6 (Flameproof)
Ex tD A20 IP 66 T 95 °C (Dust)
Vmax = 32 V

Special Conditions for Safe Use (X):

For information on the dimensions of the flameproof joints the manufacturer shall be contacted.

Table B-1. Electrical Data

Transmitter	Sensor
V_{max} = 32 Vdc	U_{max} = 5 Vdc
I_{max} = 12.0 mA	I_{max} = 2.0 mA

I7 IECEx Intrinsic Safety
Certificate Number: IECEx BAS 07.0053X
Ex ia IIC T4/T5/T6

Table B-2. Temperature Classification

$P_{i\ (W)}$	Temperature Class	T_{amb}
1.3	T4	-50 °C to 60 °C
5.32 (FISCO Group IIC)	T4	-50 °C to 80 °C

Special Conditions for Safe Use (X):

1. The apparatus must be installed in an enclosure which affords it a degree of protection of at least IP20.
2. Non-metallic enclosures must have a surface resistance of less than 1 GΩ; light alloy or zirconium enclosures must be protected from impact and friction when installed.

Table B-3. Entity Parameters

Transmitter (I.S.)	Transmitter (FISCO)	Sensor
U_i = 30 Vdc	U_i = 17.5 Vdc	U_o = 13.9 Vdc
I_i = 300 mA	I_i = 380 mA	I_o = 23 mA
P_i = 1.3 W	P_i = 5.32 W	P_o = 79 mW
C_i = 2.1 nF	C_i = 2.1 nF	C_i = 7.7 nF
L_i = 0 mH	L_i = 0 mH	L_i = 0 mH

N7 IECEx Type n
Certificate Number: IECEx BAS 07.0055
Ex nA nL IIC T5 (-40 °C ≤ T_{amb} ≤ 70 °C)

Table B-4. Electrical Data

Transmitter	Sensor	
	RTD	Thermocouple
U_i = 32 V	U_i = 5 V	U_i = 0

NG IECEx Type n Component
Certificate Number: IECEx BAS 07.0054U
Ex nA nL IIC T5 (-40 °C ≤ T_{amb} ≤ 75 °C)
Input Parameter: Ui = 32 Vdc

Schedule of Limitations:

The component must be housed in a suitably certified enclosure that provides a degree of protection of at least IP54.

Brazilian Certifications

Cen□ro de Pe□□□i□a□ de Energia Ele□rica □CEPEL□A□□ro□al

I2 CEPEL Intrinsic Safety

Japanese Certifications

□a□ane□e Ind□□□rial S□andard □□IS□A□□ro□al□

I4 JIS Intrinsic Safety

E4 JIS Explosion Proof

Combination Approvals

K5 Combination of I5 and E5.

NOTE

K5 is only available with 644H option code J6.

Rosemount 644 with HART

North American Certifications

Factory Mutual (FM) Approval

I5 FM Intrinsic Safety and Non-incendive:
Intrinsically Safe for Class I/II/III, Division 1, Groups A, B, C, D, E, F, and G.
Non-incendive for Class I, Division 2, Groups A, B, C, and D. Intrinsically Safe and non-incendive when installed in accordance with Rosemount drawing 00644-0009.

TABLE 2. Temperature Code

Pi	Temperature Code
0.67 W	T5 (T_{amb} = – 50 °C to 50 °C)
0.67 W	T6 (T_{amb} = – 50 °C to 40 °C)
1.0 W	T4 (T_{amb} = – 50 °C to 80 °C)
1.0 W	T5 (T_{amb} = – 50 °C to 40 °C)

E5 FM Explosion-Proof and Non-incendive:
Explosion-Proof for Class I, Division 1, Groups B, C, and D. Dust Ignition Proof for Class II/III, Division 1, Groups E, F, G when installed per Rosemount Drawing 00644-1049. Non-incendive for Class 1, Division 2, Groups A, B, C, and D. Temperature Code: T5 (T_{amb}= –50 °C to 85 °C) Conduit seal not required for compliance with NEC501–5a(1).

NOTE

Approval E5 is only available with 644H option codes J5 and J6.

K5 Combination of I5 and E5.

NOTE

K5 is only available with 644H option code J6.

Canadian Standards Association (CSA) Approval

I6 CSA Intrinsic Safety
Intrinsically Safe for Class I, Division 1, Groups A, B, C, and D when installed in accordance with Rosemount drawing 00644–1064.

TABLE 3. Temperature Code

Pi	Temperature Code
0.67 W	T6 (T_{amb} = – 50 °C to 40 °C)
0.67 W	T5 (T_{amb} = – 50 °C to 60 °C)
1.0 W	T4 (T_{amb} = – 50 °C to 80 °C)

K6 CSA Intrinsic Safety, Explosion–Proof, and Non-incendive.
Combination of I6 and Explosion–proof for Class I, Division 1, Groups B, C, and D; Dust-ignition proof for Class II, Division 1, Groups E, F, and G; Class III, Division 1 hazardous locations, when installed in accordance with Rosemount drawing 00644–1059.
Temperature Code: T4(T_{amb} = -50 °C to 85 °C)
Suitable for Class I, Division 2, Groups B, C, and D when installed in a suitable enclosure.
Temperature Code: T5 (T_{amb} = -50 °C to 85 °C).

NOTE

K6 is only available with 644H option code J6.

European Certifications

ATE□ A□□ro□al□

I1 ATEX Intrinsic Safety:
Certificate Number: BAS00ATEX1033X
ATEX Marking: Ⓔx II 1 G EEx ia IIC T4/T5/T6
CE 1180

TABLE 4. Temperature Code

Pi	Temperature Code
0.67 W	T6 (– 60 °C ≤ T_{amb} ≤ 40 °C)
0.67 W	T5 (– 60 °C ≤ T_{amb} ≤ 50 °C)
1.0 W	T5 (– 60 °C ≤ T_{amb} ≤ 40 °C)
1.0 W	T4 (– 60 °C ≤ T_{amb} ≤ 80 °C)

TABLE 5. Entity Parameters

Loop/Power	Sensor
U_i = 30 V	U_o = 13.6 V
I_i = 200 mA	I_o = 80 mA
P_i = 0.67 W or 1.0 W	P_o = 80 mW
C_i = 10 nF	C_i = 75 nF
L_i = 0	L_i = 0

Special Conditions for Safe Use (X):

The transmitter must be installed so that its external terminals and communication pins are protected to at least IP20.
Non-metallic enclosures must have a surface resistance of less than 1GΩ. Light alloy or zirconium enclosures must be protected from impact and friction when installed.

E1 ATEX Flame-Proof:
Certificate Number: KEMA99ATEX8715
ATEX Marking: Ⓔx II 2 G EEx d IIC T6
CE 1180
Temperature Code: T6 (–40°C ≤ T_{amb} ≤ 65°C)
Max Input: U_i=55Vdc
I_i = 24.0 mA

N1 ATEX Type n:
Certificate Number: BAS00ATEX3145
ATEX Marking: Ⓔx II 3 G EEx nL IIC T5
Temperature Code: T5 (–40°C ≤ T_{amb} ≤ 70°C)
Max Input Voltage: U_i=45Vdc

NC ATEX Type n Component:
Certificate Number: BAS99ATEX3084U
ATEX Marking: Ⓔx II 3 G EEx nL IIC T5
Temperature Code: T5 (–40°C ≤ T_{amb} ≤ 70°C)
Max Input Voltage: U_i=45Vdc

NOTE

The equipment must be installed in an enclosure meeting the requirements of IP54 and the requirements of the impact tests described in EN50021.

ND ATEX Dust Ignition-Proof
Certificate Number: KEMA99ATEX8715
ATEX Marking: Ex II 1 D
CE 1180
T95°C (-40°C < Tamb < +85°C)
IP66
Max Input: U_i = 55 Vdc
I_i = 24.0 mA

IECEx Certifications

E7 IECEx Flameproof and Dust
Certificate Number: IECEx KEM 09.0015X
Ex d IIC T6 (Flameproof)

Ex tD A20 IP 66 T 95 °C (Dust)

Vmax = 42.4 V

Special Conditions for Safe Use (X):
For information on the dimensions of the flameproof joints the manufacturer shall be contacted.

Table B-5. Electrical Data

Transmitter	Sensor
U_{max} = 42.4 Vdc	U_{max} = 5 Vdc
I_{max} = 24.0 mA	I_{max} = 2.0 mA

I7 IECEx Intrinsic Safety
Certificate Number: IECEx BAS 07.0053X
Ex ia IIC T4/T5/T6

Table B-6. Temperature Classification

$P_{i\ (W)}$	Temperature Class	T_{amb}
0.67	T6	-60 °C to 40 °C
0.67	T5	-60 °C to 50 °C
1.0	T5	-60 °C to 40 °C
1.0	T4	-60 °C to 80 °C

Special Conditions for Safe Use (X):

1. The apparatus must be installed in an enclosure which affords it a degree of protection of at least IP20.
2. Non-metallic enclosures must have a surface resistance of less than 1 GΩ; light alloy or zirconium enclosures must be protected from impact and friction when installed.

Table B-7. Entity Parameters

Transmitter	Sensor
U_i = 30 Vdc	U_o = 13.6 Vdc
I_i = 200 mA	I_o = 80 mA
P_i = 0.67 W or 1.0 W	P_o = 80 mW
C_i = 10 nF	C_i = 75 nF
L_i = 0 mH	L_i = 0 mH

N7 IECEx Type n
Certificate Number: IECEx BAS 07.0055
Ex nA nL IIC T5 (-40 °C ≤ T_{amb} ≤ 70 °C)

Table B-8. Electrical Data

Transmitter	Sensor	
	RTD	Thermocouple
u = 42.4 V	U_i = 5 V	U_i = 0

NG IECEx Type n Component
Certificate Number: IECEx BAS 07.0054U
Ex nA nL IIC T5 (-40 °C ≤ T_{amb} ≤ 75 °C)

Input Parameter: Ui = 42.4 Vdc

Schedule of Limitations:

The component must be housed in a suitably certified enclosure that provides a degree of protection of at least IP54.

Brazilian Certifications

Cen□ro de Pe□□□i□a□ de Energia Ele□rica □CEPEL□A□□ro□al

I2 CEPEL Intrinsic Safety. Not available, consult factory

Russian Certifications

□o□□andar□

Tested and approved by the Russian Metrological Institute GOSTANDART.

Japanese Certifications

□a□ane□e Ind□□□rial S□andard □□IS□A□□ro□al□

E4 JIS Explosion-Proof

TABLE 6. Certificate and Description

Certificate	Description	Approval Group	Temp Code
C15744	644H with meter and no sensor	Ex d II C	T6
C15745	644H without meter and no sensor	Ex d II C	T6
C15910	644H without meter and with thermocouple	Ex d II B + H2	T4
C15911	644H with meter and thermocouple	Ex d II B + H2	T4
C15912	644H without meter and with RTD	Ex d II B + H2	T4
C15913	644H with meter and RTD	Ex d II B + H2	T4

INSTALLATION DRAWINGS

The installation guidelines presented by the drawings must be followed in order to maintain certified ratings for installed transmitters.

Rosemount Drawing 00644-1064, 1 Sheet,
Canadian Standards Association Intrinsic Safety Installation Drawing

Rosemount Drawing 00644-1059, 1 Sheet;
Canadian Standards Association Explosion-Proof Installation Drawing

Rosemount Drawing 00644-2076, 3 Sheets;
Canadian Standards Association 644 Fieldbus Intrinsic Safety/FISCO Installation Drawing

Rosemount Drawing 00644-0009, 2 Sheet
Factory Mutual Intrinsic Safety Installation Drawing

Rosemount Drawing 00644-1049, 1 Sheet;
Factory Mutual Explosion-proof Installation Drawing

Rosemount Drawing 00644-2075, 3 Sheets;
Factory Mutual 644 Fieldbus Intrinsic Safety/FISCO Installation Drawing

IMPORTANT
Once a device labeled with multiple approval types is installed, it should not be reinstalled using any of the other labeled approval types. To ensure this, the approval label should be permanently marked to distinguish the used from the unused approval type(s).

Figure B-1. CSA Intrinsic Safety Installation Drawing 00644-1064, Rev. AB

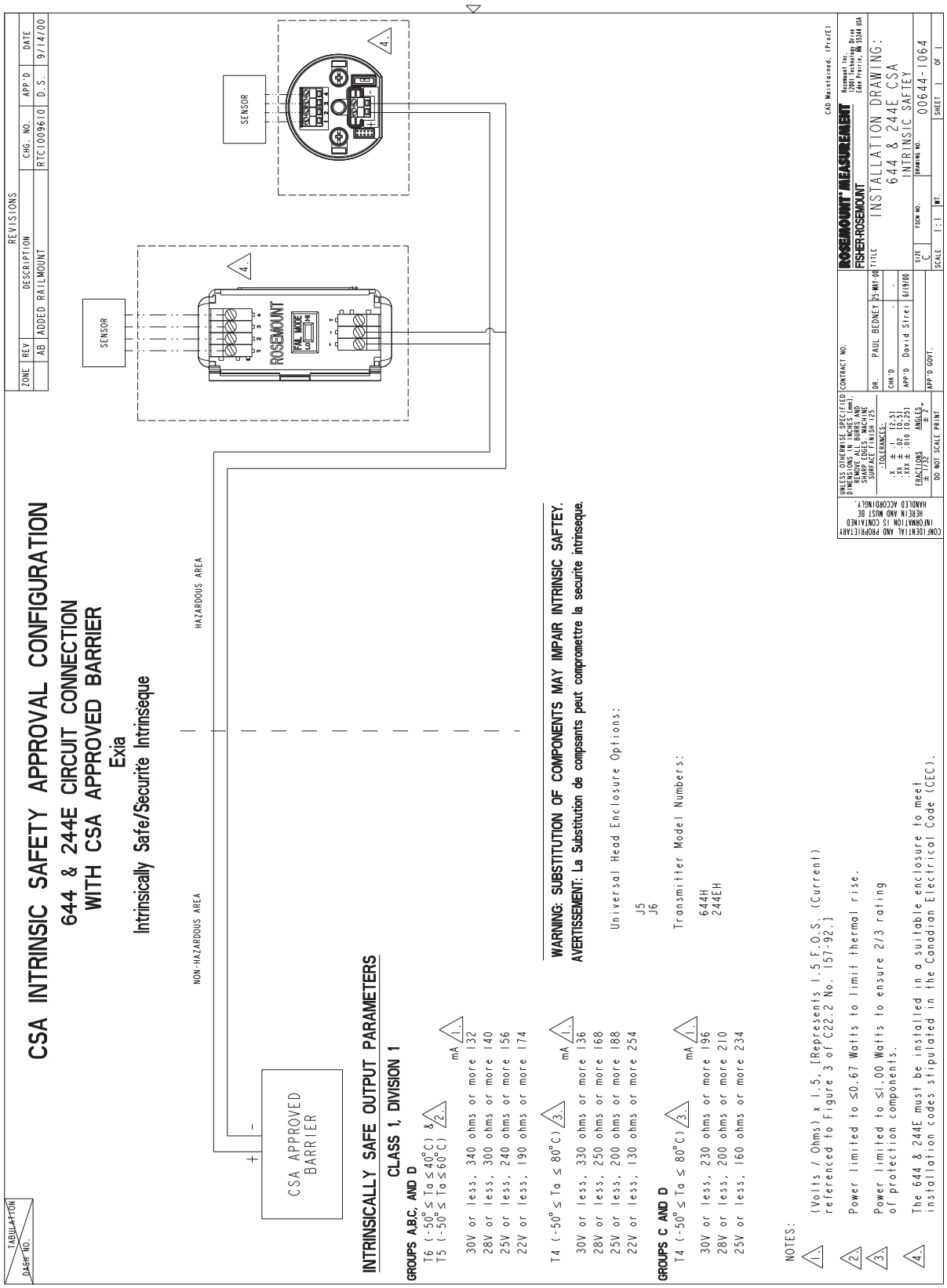

Figure B-2. CSA Explosion-Proof Installation Drawing 00644-1059, Rev. AF

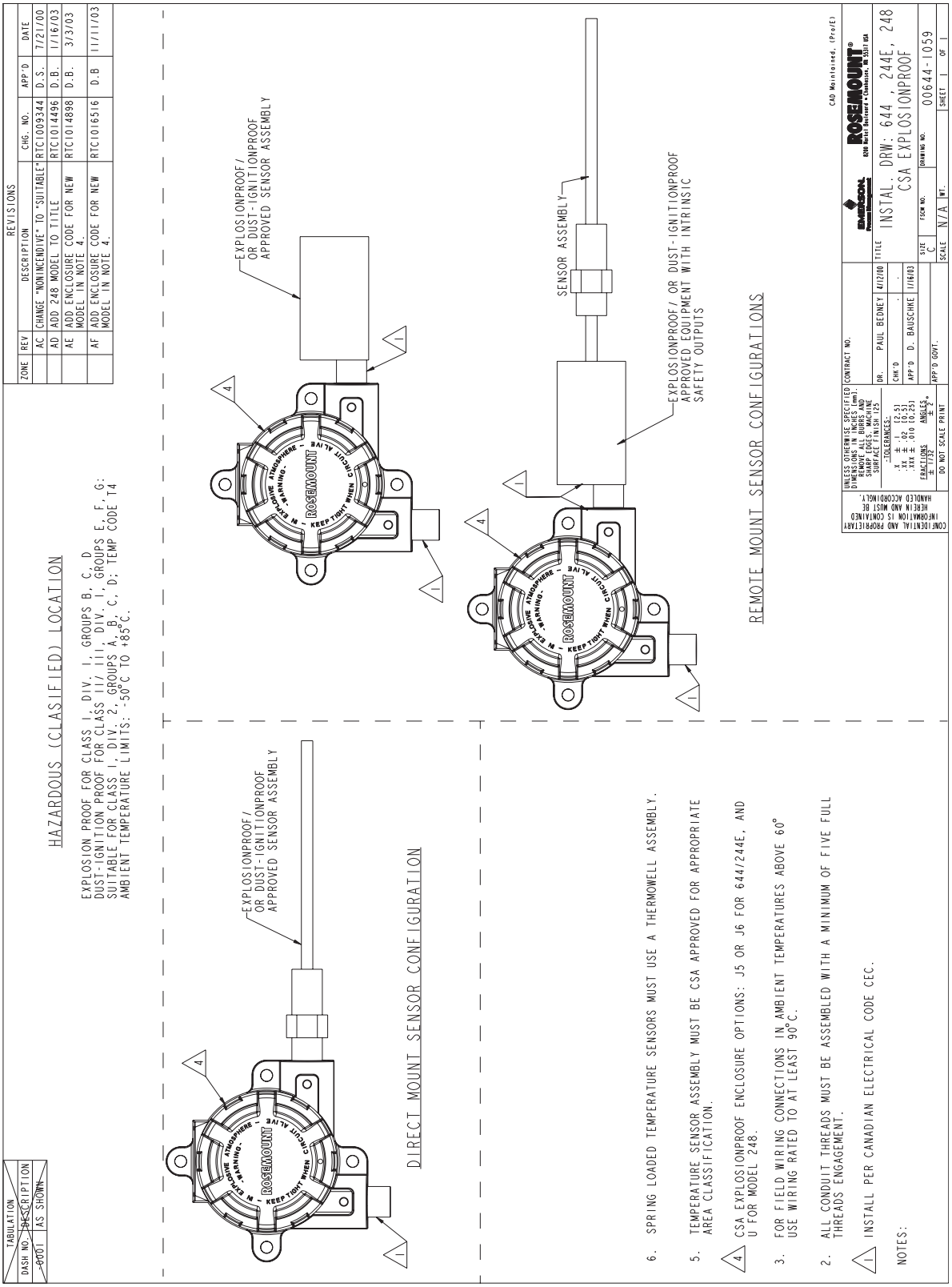

644-1059A01A

Figure B-3. CSA 644 Fieldbus Intrinsic Safety, FISCO Installation Drawing 00644-2076, Rev. AB Sheet 1 of 3

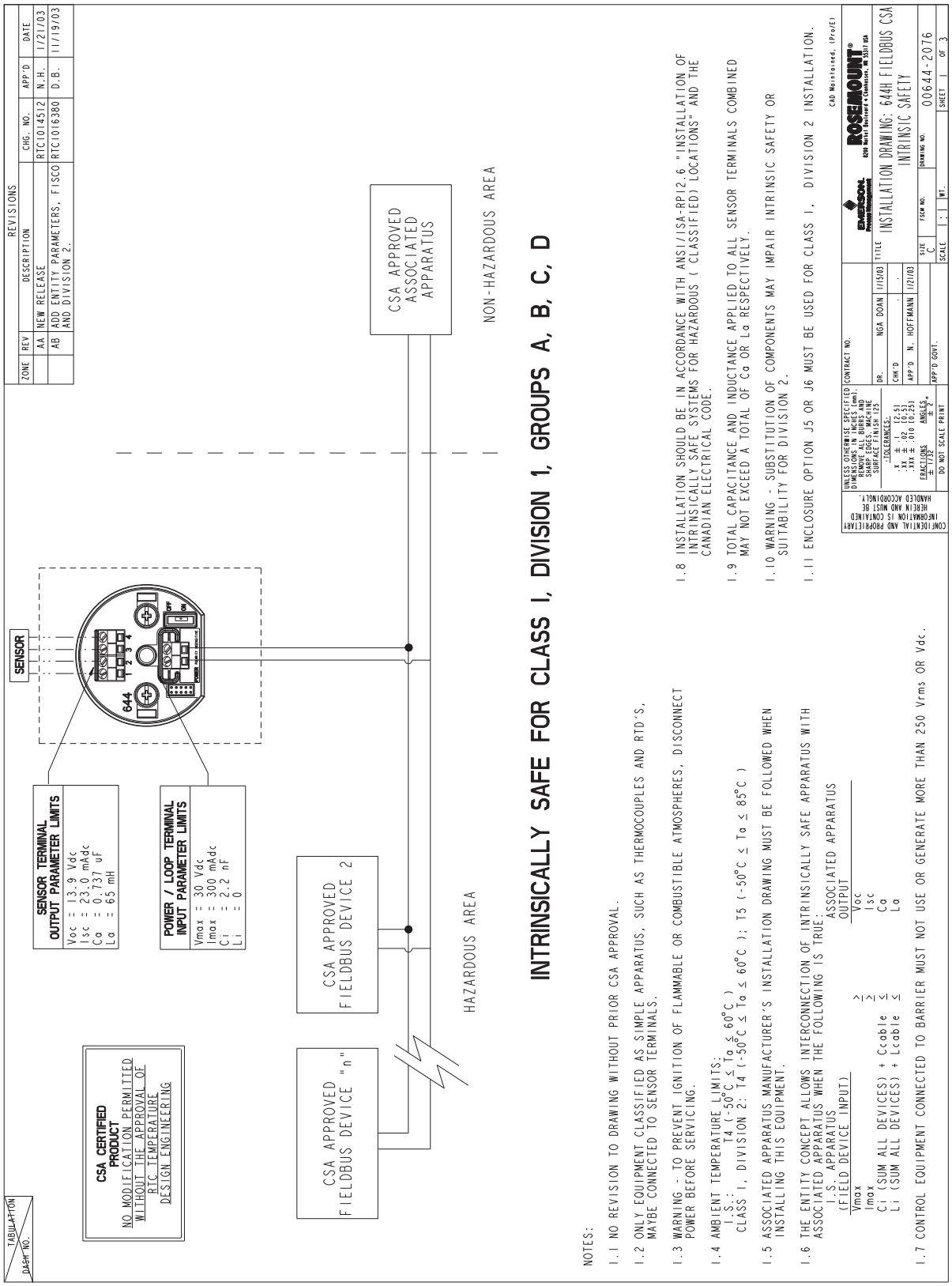

644-1049A01A

Sheet 2 of 3

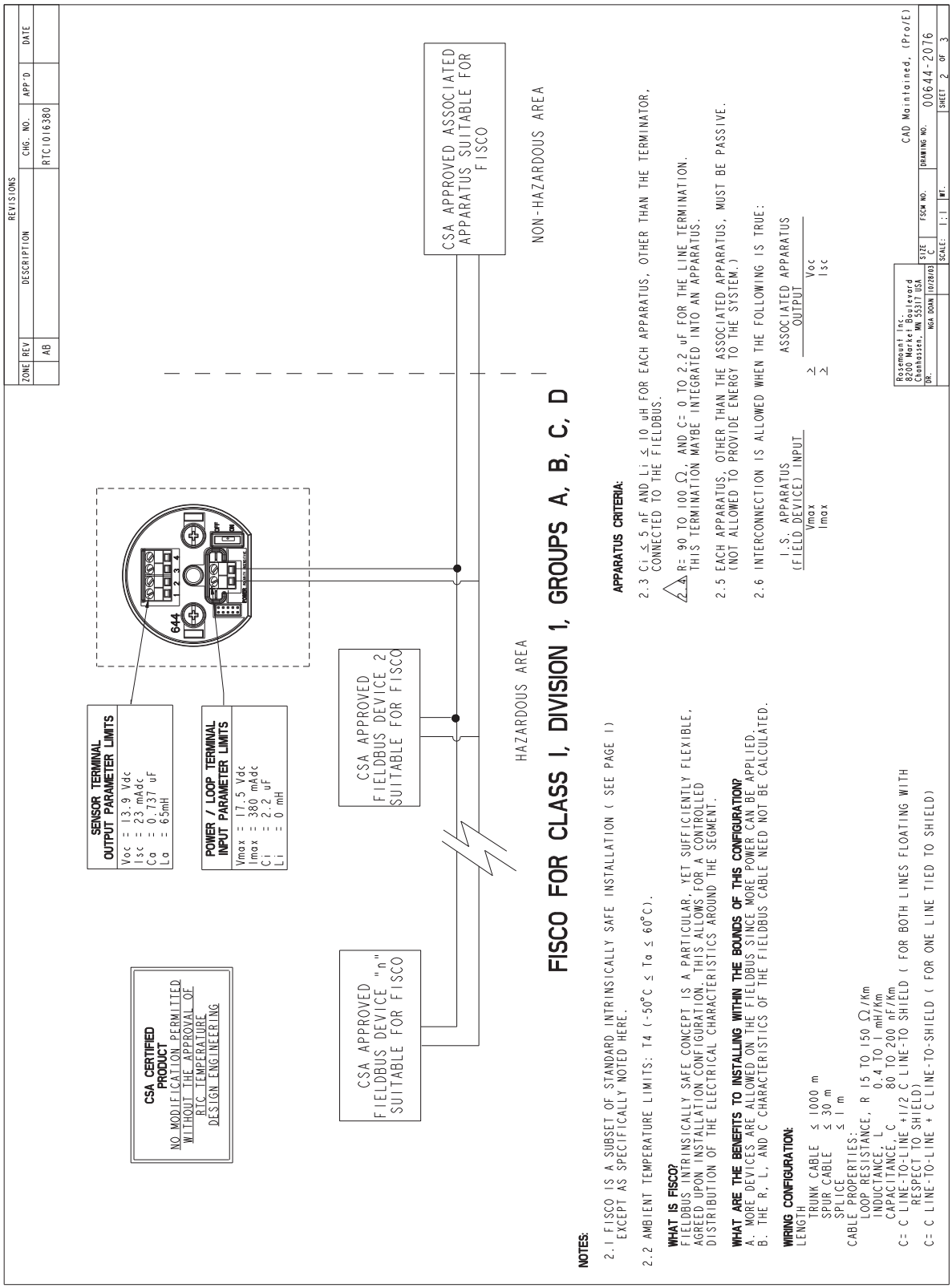

644-0009A01A

Sheet 3 of 3

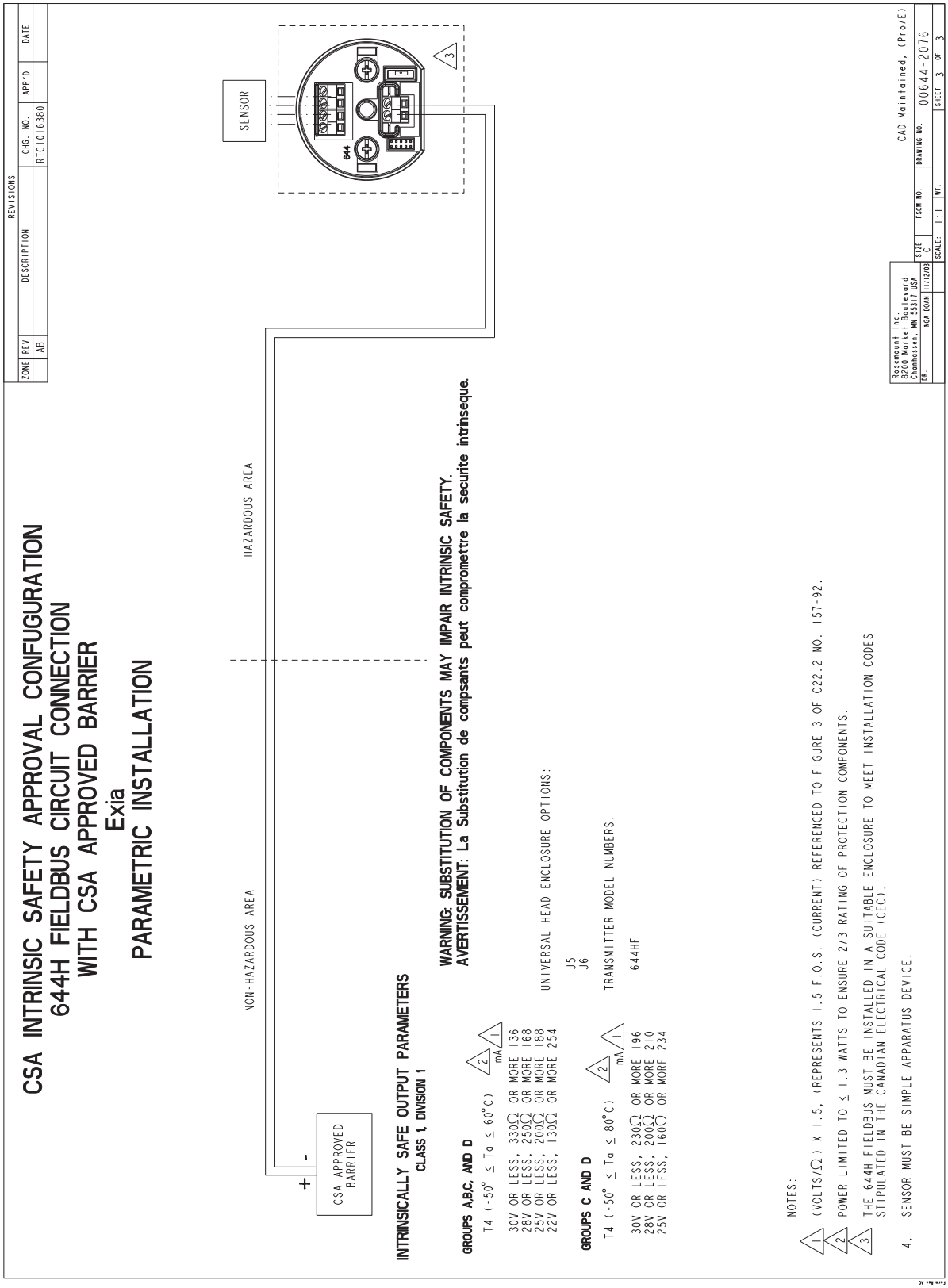

644-0009A01A

Figure B-4. FM Intrinsic Safety Installation Drawing 00644-0009, Rev. AD Sheet 1 of 2

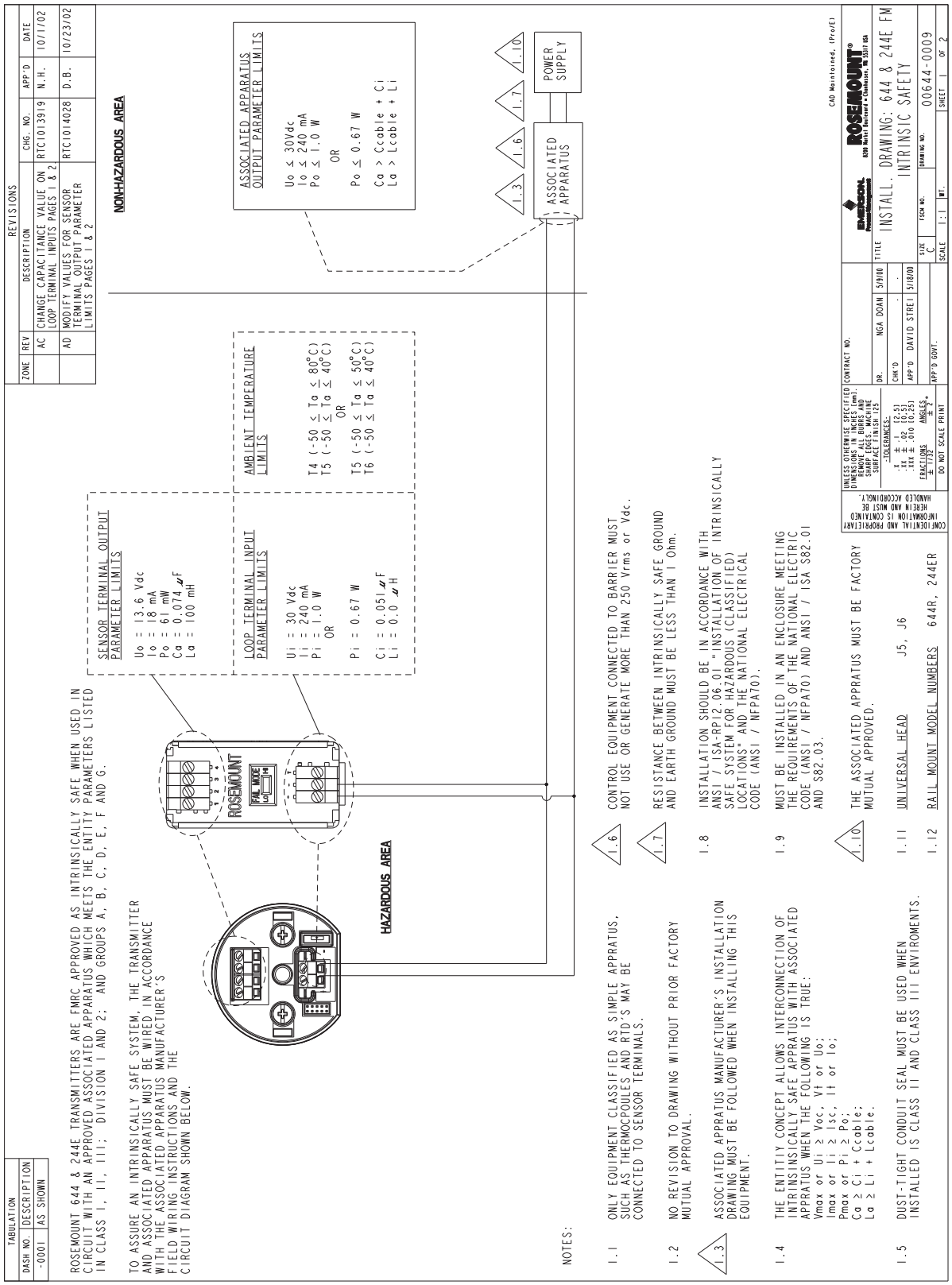

644-0009A01A

Sheet 2 of 2

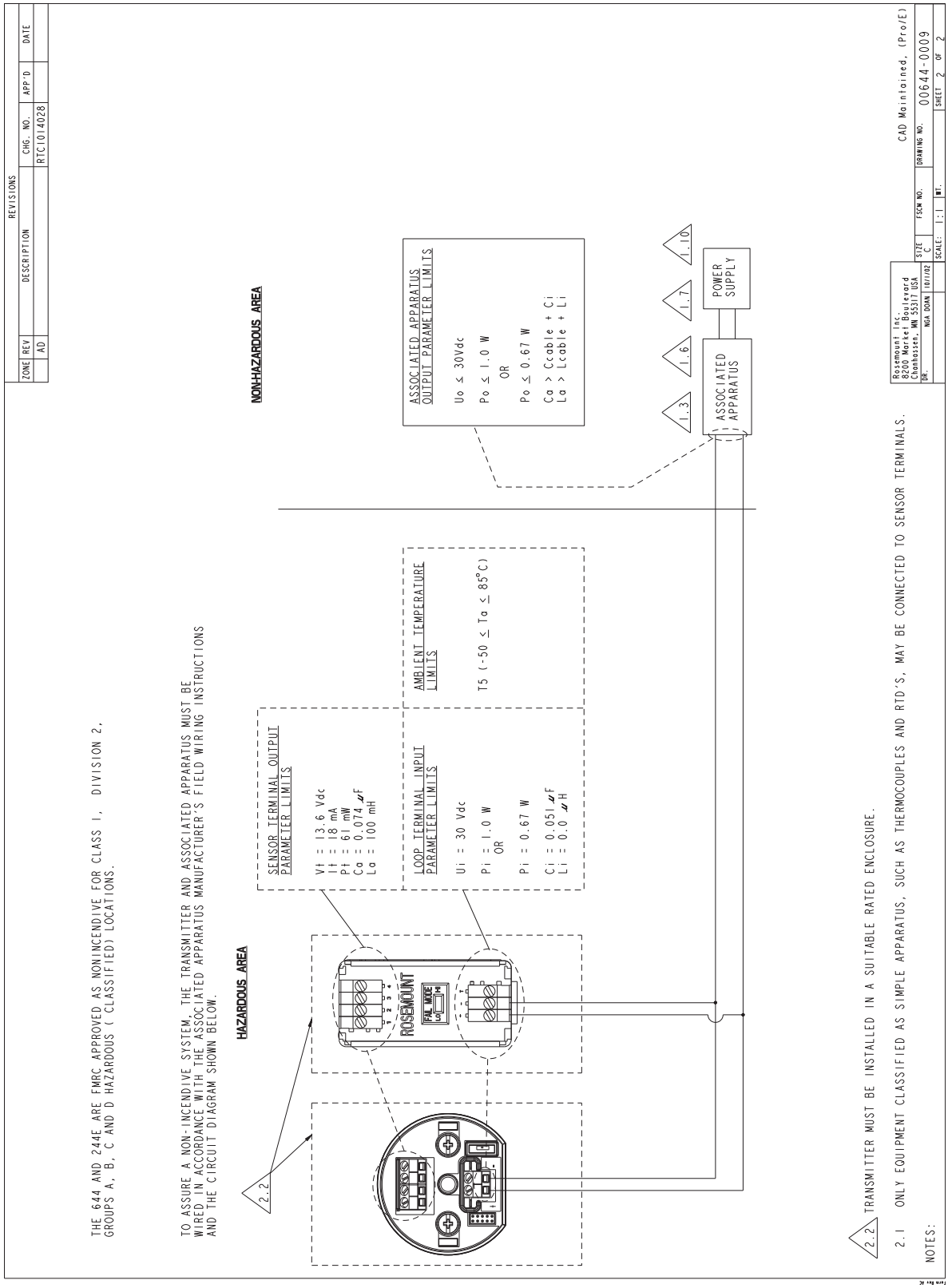

644-0009A01A

Figure B-5. FM Explosion-Proof Installation Drawing 00644-1049, Rev. AD

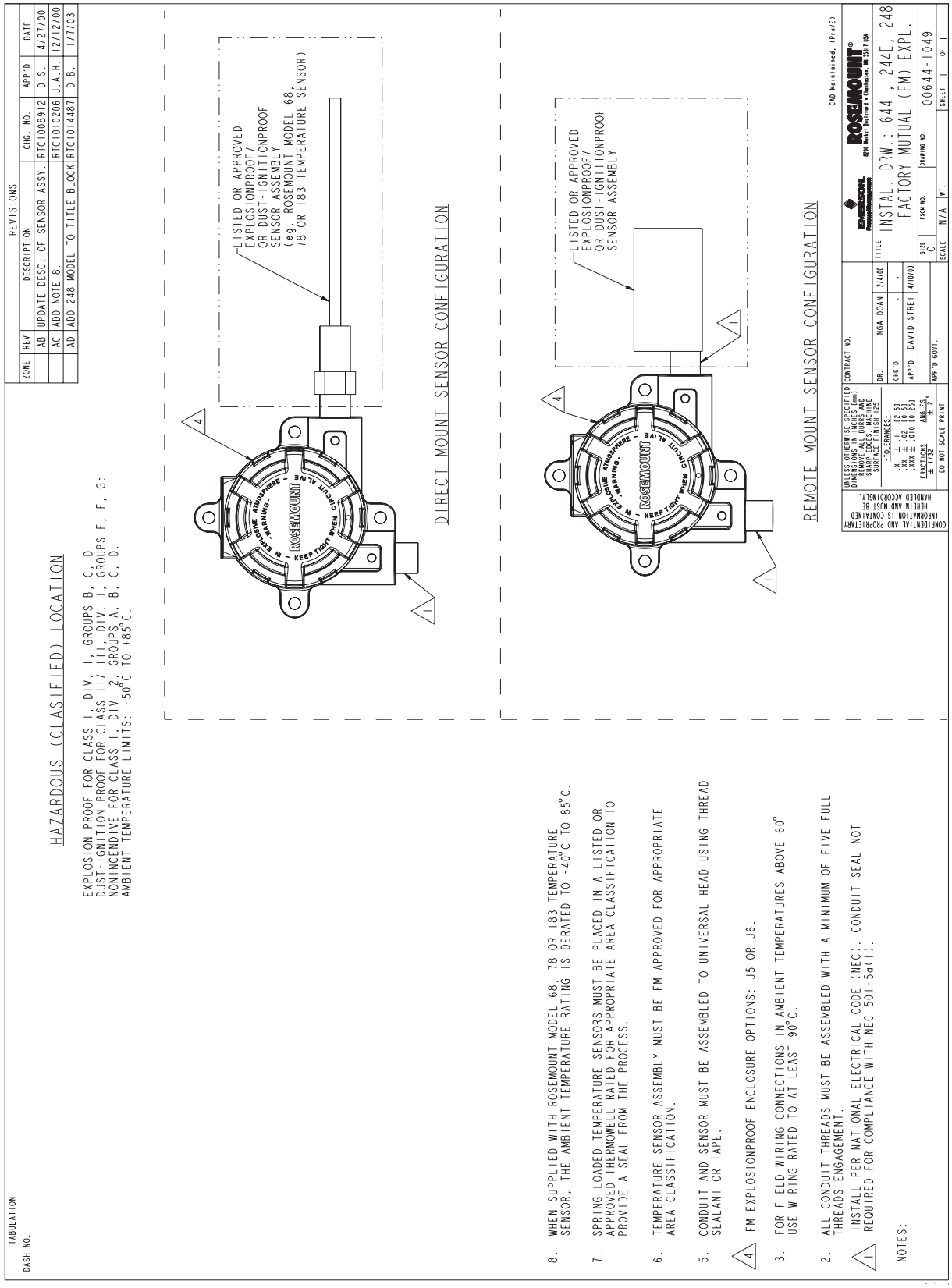

644-1049A01A

Figure B-6. FM 644 Fieldbus Intrinsic Safety and FISCO Installation Drawing 00644-2075, Rev. AB Sheet 1 of 3

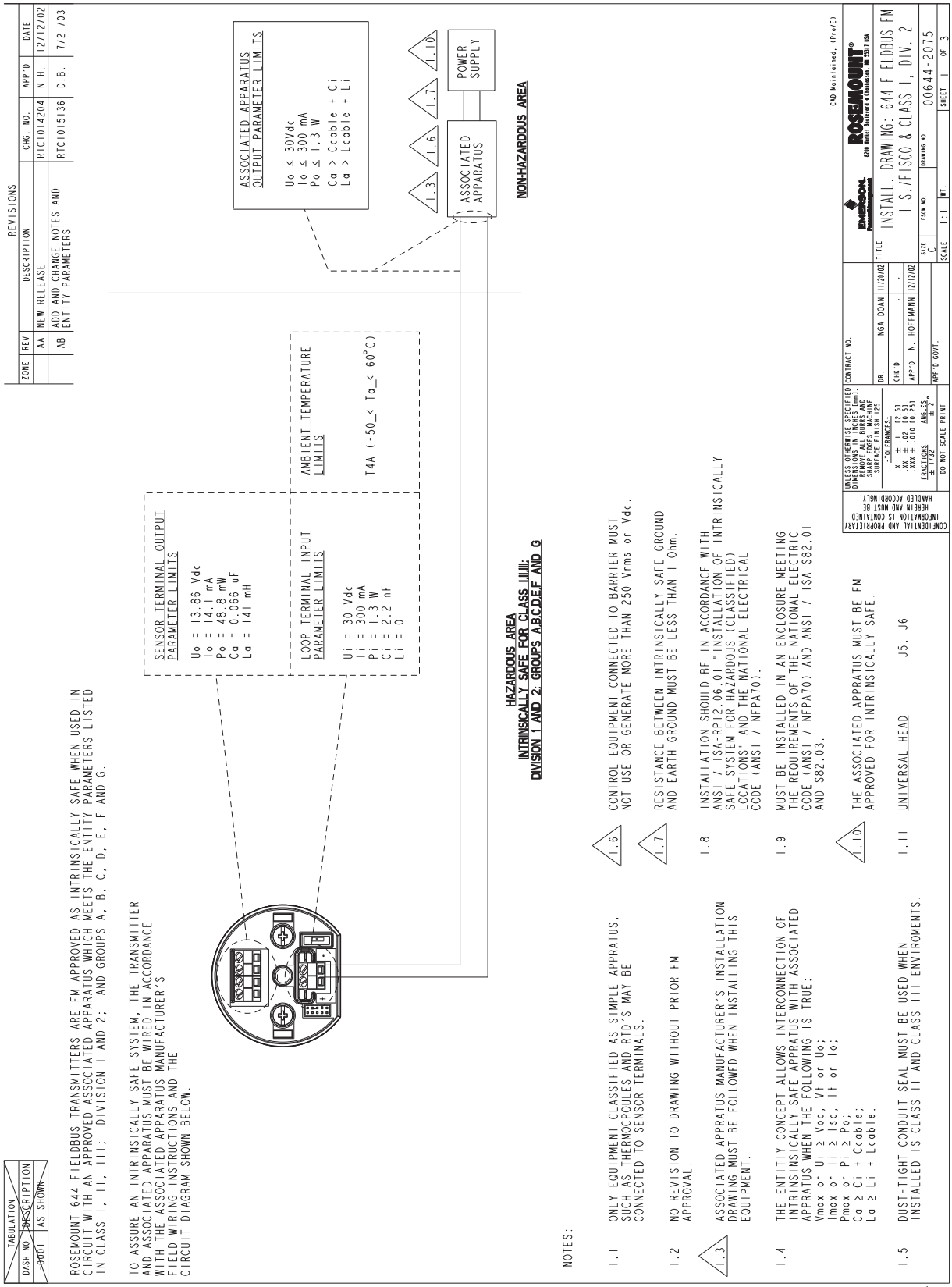

644-1049A01A

Sheet 2 of 3

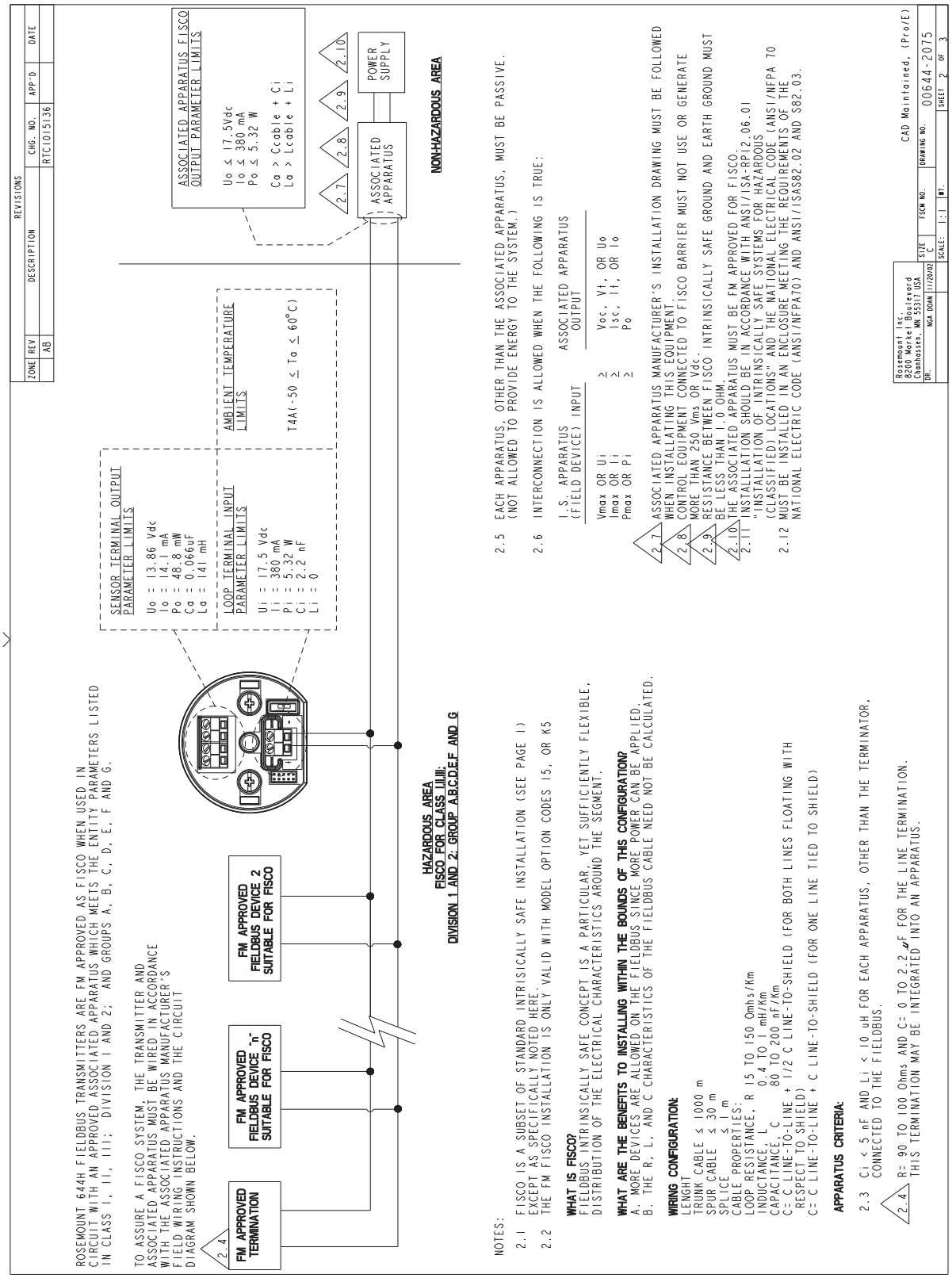

644-0009A01A

Sheet 3 of 3

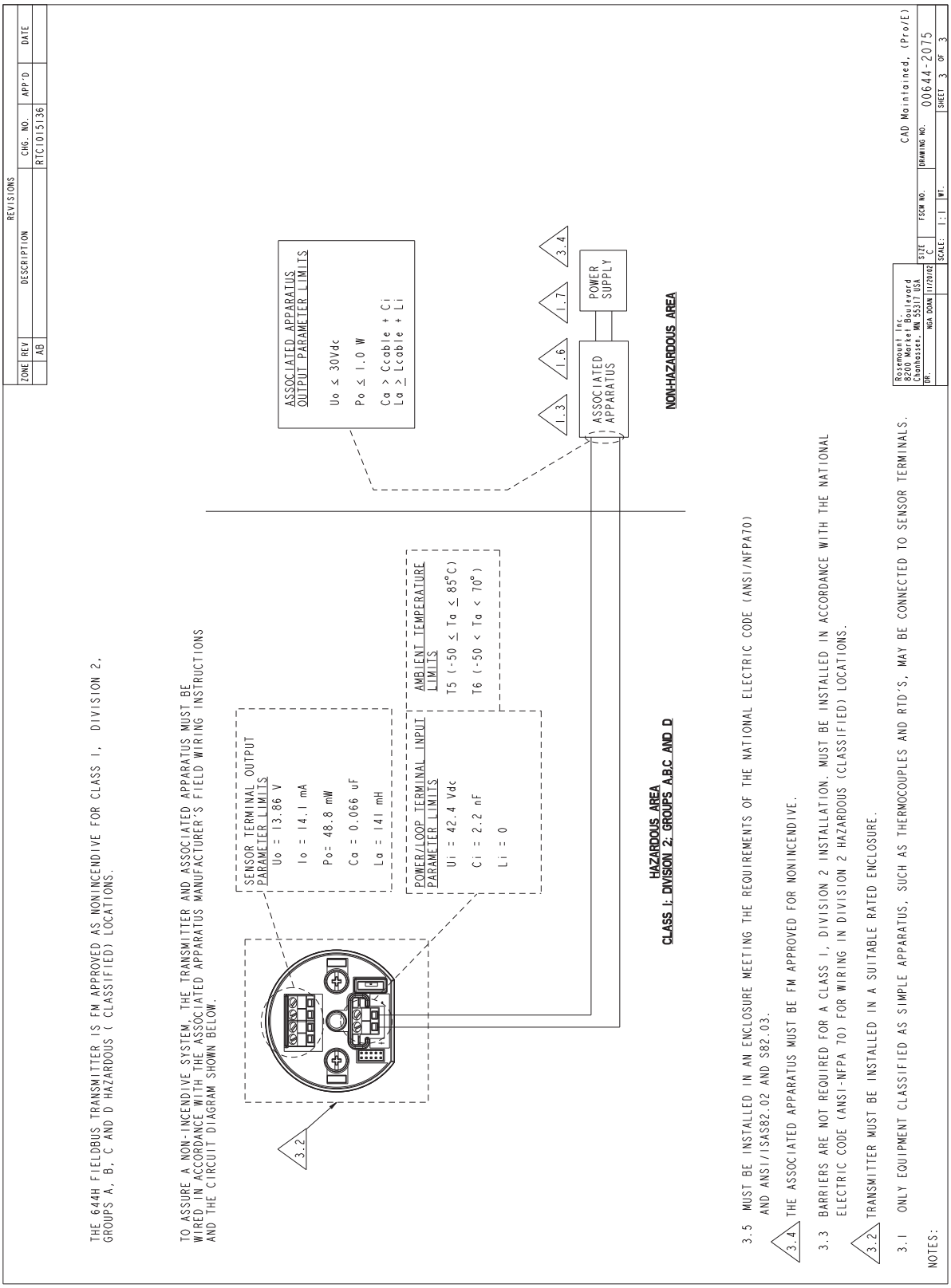

644-0009A01A

Appendix C FOUNDATION fieldbus Block Information

Resource Block . . . . . page C-1
Sensor Transducer Block . . . . . page C-5
Analog Input (AI) Function Block . . . . . page C-8
LCD Transducer Block . . . . . page C-12
PID Block . . . . . page C-13

BASIC SETUP

RESOURCE BLOCK

This section contains information on the 644 Resource Block. Descriptions of all Resource Block Parameters, errors, and diagnostics are included. Also the modes, alarm detection, status handling, and troubleshooting are discussed.

Definition

The resource block defines the physical resources of the device. The resource block also handles functionality that is common across multiple blocks. The block has no linkable inputs or outputs.

Parameters and Descriptions

The table below lists all of the configurable parameters of the Resource Block, including the descriptions and index numbers for each.

Parameter	Index Number	Description
ACK_OPTION	38	Selection of whether alarms associated with the function block will be automatically acknowledged.
ADVISE_ACTIVE	82	Enumerated list of advisory conditions within a device.
ADVISE_ALM	83	Alarm indicating advisory alarms. These conditions do not have a direct impact on the process or device integrity.
ADVISE_ENABLE	80	Enabled ADVISE_ALM alarm conditions. Corresponds bit for bit to the ADVISE_ACTIVE. A bit on means that the corresponding alarm condition is enabled and will be detected. A bit off means the corresponding alarm condition is disabled and will not be detected.
ADVISE_MASK	81	Mask of ADVISE_ALM. Corresponds bit of bit to ADVISE_ACTIVE. A bit on means that the condition is masked out from alarming.
ADVISE_PRI	79	Designates the alarming priority of the ADVISE_ALM
ALARM_SUM	37	The current alert status, unacknowledged states, unreported states, and disabled states of the alarms associated with the function block.
ALERT_KEY	04	The identification number of the plant unit.
BLOCK_ALM	36	The block alarm is used for all configuration, hardware, connection failure or system problems in the block. The cause of the alert is entered in the subcode field. The first alert to become active will set the Active status in the Status parameter. As soon as the Unreported status is cleared by the alert reporting task, another block alert may be reported without clearing the Active status, if the subcode has changed.
BLOCK_ERR	06	This parameter reflects the error status associated with the hardware or software components associated with a block. It is a bit string, so that multiple errors may be shown.
CLR_FSTATE	30	Writing a Clear to this parameter will clear the device FAIL_SAFE if the field condition has cleared.
CONFIRM_TIME	33	The time the resource will wait for confirmation of receipt of a report before trying again. Retry will not happen when CONFIRM_TIME=0.
CYCLE_SEL	20	Used to select the block execution method for this resource. The 644 supports the following: Scheduled: Blocks are only executed based on the function block schedule. Block Execution: A block may be executed by linking to another blocks completion.
CYCLE_TYPE	19	Identifies the block execution methods available for this resource.
DD_RESOURCE	09	String identifying the tag of the resource which contains the Device Description for this resource.
DD_REV	13	Revision of the DD associated with the resource - used by an interface device to locate the DD file for the resource.
DEFINE_WRITE_LOCK	60	Allows the operator to select how WRITE_LOCK behaves. The initial value is “lock everything”. If the value is set to “lock only physical device” then the resource and transducer blocks of the device will be locked but changes to function blocks will be allowed.
DETAILED_STATUS	55	Indicateds the state of the transmitter. See Resource Block detailed status codes.
DEV_REV	12	Manufacturer revision number associated with the resource - used by an interface device to locate the DD file for the resource.
DEV_STRING	43	This is used to load new licensing into the device. The value can be written but will always read back with a value of 0.
DEV_TYPE	11	Manufacturer’s model number associated with the resource - used by interface devices to locate the DD file for the resource.
DIAG_OPTIONS	46	Indicates which diagnostics licensing options are enabled.
DISTRIBUTOR	42	Reserved for use as distributor ID. No Foundation enumerations defined at this time.
DOWNLOAD_MODE	67	Gives access to the boot block code for over-the-wire downloads. 0 = Uninitialized 1 = Run mode 2 = Download mode

Parameter	Index Number	Description
FAULT_STATE	28	Condition set by loss of communication to an output block, fault promoted to an output block or physical contact. When FAIL_SAFE condition is set, then output function blocks will perform their FAIL_SAFE actions.
FAILED_ACTIVE	72	Enumerated list of failure conditions within a device.
FAILED_ALM	73	Alarm indicating a failure within a device which makes the device non-operational.
FAILED_ENABLE	70	Enabled FAILED_ALM alarm conditions. Corresponds bit for bit to the FAILED_ACTIVE. A bit on means that the corresponding alarm condition is enabled and will be detected. A bit off means the corresponding alarm condition is disabled and will not be detected.
FAILED_MASK	71	Mask of FAILED_ALM. Corresponds bit of bit to FAILED_ACTIVE. A bit on means that the condition is masked out from alarming.
FAILED_PRI	69	Designates the alarming priority of the FAILED_ALM.
FB_OPTIONS	45	Indicates which function block licensing options are enabled.
FEATURES	17	Used to show supported resource block options. See Error! Reference source not found. The supported features are: SOFT_WRITE_LOCK_SUPPORT, HARD_WRITE_LOCK_SUPPORT, REPORTS, and UNICODE
FEATURE_SEL	18	Used to select resource block options.
FINAL_ASSY_NUM	54	The same final assembly number placed on the neck label.
FREE_SPACE	24	Percent of memory available for further configuration. Zero in a preconfigured device.
FREE_TIME	25	Percent of the block processing time that is free to process additional blocks.
GRANT_DENY	14	Options for controlling access of host computers and local control panels to operating, tuning, and alarm parameters of the block. Not used by device.
HARD_TYPES	15	The types of hardware available as channel numbers.
HARDWARE_REV	52	Hardware revision of the hardware that has the resource block in it.
ITK_VER	41	Major revision number of the inter operability test case used in certifying this device as interoperable. The format and range are controlled by the Fieldbus Foundation.
LIM_NOTIFY	32	Maximum number of unconfirmed alert notify messages allowed.
MAINT_ACTIVE	77	Enumerated list of maintenance conditions within a device.
MAINT_ALM	78	Alarm indicating the device needs maintenance soon. If the condition is ignored, the device will eventually fail.
MAINT_ENABLE	75	Enabled MAINT_ALM alarm conditions. Corresponds bit for bit to the MAINT_ACTIVE. A bit on means that the corresponding alarm condition is enabled and will be detected. A bit off means the corresponding alarm condition is disabled and will not be detected.
MAINT_MASK	76	Mask of MAINT_ALM. Corresponds bit of bit to MAINT_ACTIVE. A bit on means that the condition is masked out from alarming.
MAINT_PRI	74	Designates the alarming priority of the MAINT_ALM
MANUFAC_ID	10	Manufacturer identification number – used by an interface device to locate the DD file for the resource.
MAX_NOTIFY	31	Maximum number of unconfirmed notify messages possible.
MEMORY_SIZE	22	Available configuration memory in the empty resource. To be checked before attempting a download.
MESSAGE_DATE	57	Date associated with the MESSAGE_TEXT parameter.
MESSAGE_TEXT	58	Used to indicate changes made by the user to the device's installation, configuration, or calibration.
MIN_CYCLE_T	21	Time duration of the shortest cycle interval of which the resource is capable.
MISC_OPTIONS	47	Indicates which miscellaneous licensing options are enabled.
MODE_BLK	05	The actual, target, permitted, and normal modes of the block: Target: The mode to “go to” Actual: The mode the “block is currently in” Permitted: Allowed modes that target may take on Normal: Most common mode for actual
NV_CYCLE_T	23	Minimum time interval specified by the manufacturer for writing copies of NV parameters to non-volatile memory. Zero means it will never be automatically copied. At the end of NV_CYCLE_T, only those parameters which have changed need to be updated in NVRAM.
OUTPUT_BOARD_SN	53	Output board serial number.

Parameter	Index Number	Description
RB_SFTWR_REV_ALL	51	The string will contains the following fields: Major rev: 1-3 characters, decimal number 0-255 Minor rev: 1-3 characters, decimal number 0-255 Build rev: 1-5 characters, decimal number 0-255 Time of build: 8 characters, xx:xx:xx, military time Day of week of build: 3 characters, Sun, Mon,... Month of build: 3 characters, Jan, Feb. Day of month of build: 1-2 characters, decimal number 1-31 Year of build: 4 characters, decimal Builder: 7 characters, login name of builder
RB_SFTWR_REV_BUILD	50	Build of software that the resource block was created with.
RB_SFTWR_REV_MAJOR	48	Major revision of software that the resource block was created with.
RB_SFTWR_REV_MINOR	49	Minor revision of software that the resource block was created with.
RECOMMENDED_ACTION	68	Enumerated list of recommended actions displayed with a device alert.
RESTART	16	Allows a manual restart to be initiated. Several degrees of restart are possible. They are the following: 1 Run – nominal state when not restarting 2 Restart resource – not used 3 Restart with defaults – set parameters to default values. See START_WITH_DEFAULTS below for which parameters are set. 4 Restart processor – does a warm start of CPU.
RS_STATE	07	State of the function block application state machine.
SAVE_CONFIG_BLOCKS	62	Number of EEPROM blocks that have been modified since last burn. This value will count down to zero when the configuration is saved.
SAVE_CONFIG_NOW	61	Allows the user to optionally save all non-volatile information immediately.
SECURITY_IO	65	Status of security switch.
SELF_TEST	59	Instructs resource block to perform self-test. Tests are device specific.
SET_FSTATE	29	Allows the FAIL_SAFE condition to be manually initiated by selecting Set.
SHED_RCAS	26	Time duration at which to give up on computer writes to function block RCas locations. Shed from RCas shall never happen when SHED_ROUT = 0
SHED_ROUT	27	Time duration at which to give up on computer writes to function block ROut locations. Shed from ROut shall never happen when SHED_ROUT = 0
SIMULATE_IO	64	Status of simulate switch.
SIMULATE_STATE	66	The state of the simulate switch: 0 = Uninitialized 1 = Switch off, simulation not allowed 2 = Switch on, simulation not allowed (need to cycle jumper/switch) 3 = Switch on, simulation allowed
ST_REV	01	The revision level of the static data associated with the function block.
START_WITH_DEFAULTS	63	0 = Uninitialized 1 = do not power-up with NV defaults 2 = power-up with default node address 3 = power-up with default pd_tag and node address 4 = power-up with default data for the entire communications stack (no application data)
STRATEGY	03	The strategy field can be used to identify grouping of blocks.
SUMMARY_STATUS	56	An enumerated value of repair analysis.
TAG_DESC	02	The user description of the intended application of the block.
TEST_RW	08	Read/write test parameter - used only for conformance testing.
UPDATE_EVT	35	This alert is generated by any change to the static data.
WRITE_ALM	40	This alert is generated if the write lock parameter is cleared.
WRITE_LOCK	34	If set, no writes from anywhere are allowed, except to clear WRITE_LOCK. Block inputs will continue to be updated.
WRITE_PRI	39	Priority of the alarm generated by clearing the write lock.
XD_OPTIONS	44	Indicates which transducer block licensing options are enabled.

SENSOR TRANSDUCER BLOCK

The transducer block contains the actual measurement data, including a pressure and temperature reading. The transducer block includes information about sensor type, engineering units, linearization, reranging, temperature compensation, and diagnostics.

Parameters and Descriptions

Parameter	Index Number	Description	Notes on how changing this parameter effects transmitter operation.
ALERT_KEY	04	The identification number of the plant unit.	No effect on operation of transmitter but may affect the way alerts are sorted on the host end.
BLOCK_ALM	08	The block alarm is used for all configuration, hardware, connection failure or system problems in the block. The cause of the alert is entered in the subcode field. The first alert to become active will set the Active status in the Status parameter. As soon as the Unreported status is cleared by the alert reporting task, another block alert may be reported without clearing the Active status, if the subcode has changed.	No effect.
BLOCK_ERR	06	This parameter reflects the error status associated with the hardware or software components associated with a block. It is a bit string, so that multiple errors may be shown.	No effect.
CAL_MIN_SPAN	18	The minimum calibration span value allowed. This minimum span information is necessary to ensure when calibration is done, the two calibrated points are not too close together.	No effect.
CAL_POINT_HI	16	The highest calibrated value.	Assigns a value to the calibration high point.
CAL_POINT_LO	17	The lowest calibrated value.	Assigns a value to the calibration low point.
CAL_UNIT	19	The device description engineering units code index for the calibration values.	Device must be calibrated using the appropriate engineering units.
COLLECTION_DIRECTORY	12	A directory that specifies the number, starting indices, and DD Item ID's of the data collections in each transducer.	No effect.
ASIC_REJECTION	42	Indicates the type of material that the drain vents on the flange are made of. See Drain Vent Material Codes.	
FACTORY_CAL_RECALL	32	Recalls the sensor calibration set at the factory.	
USER_2W_OFFSET	36	Indicates the type of material that the flange is made of. See Flange Material Codes.	
INTER_DETECT_THRESH	35	Indicates the type of flange that is attached to the device. See Flange Type Codes.	
MODE_BLK	05	The actual, target, permitted, and normal modes of the block. Target: The mode to “go to” Actual: The mode the “block is currently in” Permitted: Allowed modes that target may take on Normal: Most common mode for target	Assigns the device mode.
CALIBRATOR_MODE	33	Indicates the type of sensor module.	
PRIMARY_VALUE	14	The measured value and status available to the function block.	No effect.

Parameter	Index Number	Description	Notes on how changing this parameter effects transmitter operation.
PRIMARY_VALUE_RANGE	15	The high and low range limit values, the engineering unit code, and the number of digits to the right of the decimal point to be used to display the final value. Valid engineering units are the following: 1130 = Pa 1133 = kPa 1137 = bar 1138 = mbar 1139 = torr 1140 = atm 1141 = psi 1144 = g/cm^2 1145 = kg/cm^2 1148 = inH_2O @ 68 °F 1151 = mmH_2O @ 68 °F 1154 = ftH_2O @ 68 °F 1156 = inHg @ 0 °C 1158 = mmHg @ 0 °C	No effect.
PRIMARY_VALUE_TYPE	13	Type of measurement represented by the primary value. 107 = Differential pressure 108 = Gage pressure 109 = Absolute pressure	No effect.
SENSR_DETAILED_STATUS	37	Indicates the number of remote seals that are attached to the device. See Remote Seal Number Codes.	
CAL_VAN_DUSEN_COEFF	38	Indicates the type of remote seals that are attached to the device. See Remote Seal Type Codes.	
SECONDARY_VALUE_RANG	30	The secondary value, related to the sensor.	No effect.
SECONDARY_VALUE_UNIT	29	Engineering units to be used with SECONDARY_VALUE. 1001 °C 1002 °F	No effect.
SENSOR_CAL_DATE	25	The last date on which the calibration was performed.This is intended to reflect the calibration of that part of the sensor that is usually wetted by the process.	No effect.
SENSOR_CAL_LOC	24	The last location of the sensor calibration. This describes the physical location at which the calibration was performed.	No effect.
SENSOR_CAL_METHOD	23	The method of last sensor calibration.	No effect.
OPEN_SNSR_HOLDOFF	34	The type of last sensor calibration.	No effect.
SENSOR_CAL_WHO	26	The name of the person responsible for the last sensor calibration.	No effect.
SECONDARY_VALUE	28	Defines the type of fill fluid used in the sensor.	No effect.
SENSOR_CONNECTION	27	Defines the construction material of the isolating diaphragms.	No effect.
SENSOR_RANGE	21	The high and low range limit values, the engineering units code, and the number of digits to the right of the decimal point for the sensor.	No effect.
SENSOR_SN	22	Serial number of the sensor.	No effect.
SENSOR_TYPE	20	Type of sensor connected with the transducer block.	No effect.
ST_REV	01	The revision level of the static data associated with the function block.	No effect.

Parameter	Index Number	Description	Notes on how changing this parameter effects transmitter operation.
STRATEGY	03	The strategy field can be used to identify grouping of blocks.	No effect.
TAG_DESC	02	The user description of the intended application of the block.	No effect.
SESNOR_1_DAMPING	31	Indicates the state of the transmitter. The parameter contains specific codes relating to the transducer block and the pressure sensor specifically.	No effect.
TRANSDUCER_DIRECTORY	09	Directory that specifies the number and starting indices of the transducers in the transducer block.	No effect.
TRANSDUCER_TYPE	10	Identifies the transducer that follows.	No effect.
UPDATE_EVT	07	This alert is generated by any change to the static data.	No effect.
XD_ERROR	11	Provides additional error codes related to transducer blocks.	No effect.

ANALOG INPUT (AI) FUNCTION BLOCK

The Analog Input (AI) function block processes field device measurements and makes them available to other function blocks. The output value from the AI block is in engineering units and contains a status indicating the quality of the measurement. The measuring device may have several measurements or derived values available in different channels. Use the channel number to define the variable that the AI block processes.

The AI block supports alarming, signal scaling, signal filtering, signal status calculation, mode control, and simulation. In Automatic mode, the block's output parameter (OUT) reflects the process variable (PV) value and status. In Manual mode, OUT may be set manually. The Manual mode is reflected on the output status. A discrete output (OUT_D) is provided to indicate whether a selected alarm condition is active. Alarm detection is based on the OUT value and user specified alarm limits. Figure C-1 illustrates the internal components of the AI function block, and Table C-1 lists the AI block parameters and their units of measure, descriptions, and index numbers.

Figure C-1. AI Function Block

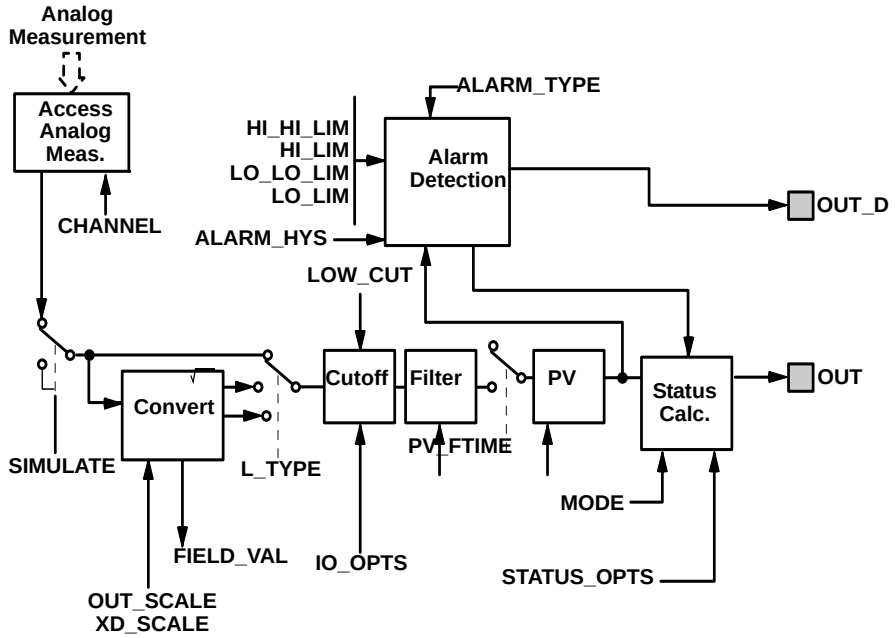

NOTES:
OUT = block output value and status.
OUT_D = discrete output that signals a selected alarm condition.

AI Parameter Table

Table C-1. Definitions of Analog Input Function Block System Parameters.

Parameter	Index No.	Available Values	Units	Default	Read/Write	Description
ACK_OPTION	23	0 = Auto Ack Disabled 1 = Auto Ack Enabled	None	0 all Disabled	Read and Write	Used to set auto acknowledgment of alarms.
ALARM_HYS	24	0 – 50	Percent	0.5	Read and Write	The amount the alarm value must return within the alarm limit before the associated active alarm condition clears.
ALM_SEL	38	HI_HI, HI, LO, LO_LO	None	Non selected	Read and Write	Used to select the process alarm conditions that will cause the OUT_D parameter to be set.
ALARM_SUM	22	Enable/Disable	None	Enable	Read and Write	The summary alarm is used for all process alarms in the block. The cause of the alert is entered in the subcode field. The first alert to become active will set the Active status in the Status parameter. As soon as the Unreported status is cleared by the alert reporting task, another block alert may be reported without clearing the Active status, if the subcode has changed.
ALERT_KEY	04	1 – 255	None	0	Read and Write	The identification number of the plant unit. This information may be used in the host for sorting alarms, etc.
BLOCK_ALM	21	Not applicable	None	Not applicable	Read only	The block alarm is used for all configuration, hardware, connection failure or system problems in the block. The cause of the alert is entered in the subcode field. The first alert to become active will set the Active status in the Status parameter. As soon as the Unreported status is cleared by the alert reporting task, another block alert may be reported without clearing the Active status, if the subcode has changed.
BLOCK_ERR	06	Not applicable	None	Not applicable	Read only	This parameter reflects the error status associated with the hardware or software components associated with a block. It is a bit string, so that multiple errors may be shown.
CAP_STDDEV	40	> = 0	Seconds	0	Read and Write	The time over which the VAR_INDEX is evaluated.
CHANNEL	15	1 = Pressure 2 = Housing temperature	None	AI[1]: Channel = 1 AI2: Channel = 2	Read and Write	The CHANNEL value is used to select the measurement value. Refer to the appropriate device manual for information about the specific channels available in each device. You must configure the CHANNEL parameter before you can configure the XD_SCALE parameter.
FIELD_VAL	19	0 – 100	Percent	Not applicable	Read only	The value and status from the transducer block or from the simulated input when simulation is enabled.
GRANT_DENY	12	Program Tune Alarm Local	None	Not applicable	Read and Write	Normally the operator has permission to write to parameter values, but Program or Local remove that permission and give it to the host controller or a local control panel.
HI_ALM	34	Not applicable	None	Not applicable	Read only	The HI alarm data, which includes a value of the alarm, a timestamp of occurrence and the state of the alarm.
HI_HI_ALM	33	Not applicable	None	Not applicable	Read only	The HI HI alarm data, which includes a value of the alarm, a timestamp of occurrence and the state of the alarm.
HI_HI_LIM	26	Out_Scale[2]	Out_Scale[2]	Not applicable	Read and Write	The setting for the alarm limit used to detect the HI HI alarm condition.
HI_HI_PRI	25	0 – 15	None	1	Read and Write	The priority of the HI HI alarm.
HI_LIM	28	Out_Scale[2]	Out_Scale[2]	Not applicable	Read and Write	The setting for the alarm limit used to detect the HI alarm condition.
HI_PRI	27	0 – 15	None	1	Read and Write	The priority of the HI alarm.
IO_OPTS	13	Low Cutoff Enable/Disable	None	Disable	Read and Write	Allows the selection of input/output options used to alter the PV. Low cutoff enabled is the only selectable option.

Parameter	Index No.	Available Values	Units	Default	Read/Write	Description
L_TYPE	16	Direct Indirect Indirect Square Root	None	Direct	Read and Write	Linearization type. Determines whether the field value is used directly (Direct), is converted linearly (Indirect), or is converted with the square root (Indirect Square Root).
LO_ALM	35	Not applicable	None	Not applicable	Read only	The LO alarm data, which includes a value of the alarm, a timestamp of occurrence and the state of the alarm.
LO_LIM	30	Out_Scale(2)	Out_Scale(2)	Not applicable	Read and Write	The setting for the alarm limit used to detect the LO alarm condition.
LO_LO_ALM	36	Not applicable	None	Not applicable	Read only	The LO LO alarm data, which includes a value of the alarm, a timestamp of occurrence and the state of the alarm.
LO_LO_LIM	32	Out_Scale(2)	Out_Scale(2)	Not applicable	Read and Write	The setting for the alarm limit used to detect the LO LO alarm condition.
LO_LO_PRI	31	0 – 15	None	1	Read and Write	The priority of the LO LO alarm.
LO_PRI	29	0 – 15	None	1	Read and Write	The priority of the LO alarm.
LOW_CUT	17	> = 0	Out_Scale(2)	0	Read and Write	If percentage value of transducer input fails below this, PV = 0.
MODE_BLK	05	Auto Manual Out of Service	None	Not applicable	Read and Write	The actual, target, permitted, and normal modes of the block. Target: The mode to “go to” Actual: The mode the “block is currently in” Permitted: Allowed modes that target may take on Normal: Most common mode for target
OUT	08	Out_Scale(2) ± 10%	Out_Scale(2)	Not applicable	Read and Write	The block output value and status.
OUT_D	37	Discrete_State 1 – 16	None	Disabled	Read and Write	Discrete output to indicate a selected alarm condition.
OUT_SCALE	11	Any output range	All available	none	Read and Write	The high and low scale values, engineering units code, and number of digits to the right of the decimal point associated with OUT.
PV	07	Not applicable	Out_Scale(2)	Not applicable	Read only	The process variable used in block execution.
PV_FTIME	18	> = 0	Seconds	0	Read and Write	The time constant of the first-order PV filter. It is the time required for a 63% change in the IN value.
SIMULATE	09	Not applicable	None	Disable	Read and Write	A group of data that contains the current transducer value and status, the simulated transducer value and status, and the enable/disable bit.
ST_REV	01	Not applicable	None	0	Read only	The revision level of the static data associated with the function block. The revision value will be incremented each time a static parameter value in the block is changed.
STATUS_OPTS	14	Propagate fault forward Uncertain if Limited Bad if Limited Uncertain if Man Mode		0	Read and Write	
STDDEV	39	0 – 100	Percent	0	Read and Write	The average absolute error between the PV and its previous mean value over that evaluation time defined by VAR_SCAN.
STRATEGY	03	0 – 65535	None	0	Read and Write	The strategy field can be used to identify grouping of blocks. This data is not checked or processed by the block.

Parameter	Index No.	Available Values	Units	Default	Read/Write	Description
TAG_DESC	02	32 text characters	None	none	Read and Write	The user description of the intended application of the block.
UPDATE_EVT	20	Not applicable	None	Not applicable	Read only	This alert is generated by any change to the static data.
XD_SCALE	10	Any sensor range	inH_2O (68 °F) inHg (0 °C) ftH_2O (68 °F) mmH_2O (68 °F) mmHg (0 °C) psi bar mbar g/cm^2 kg/cm^2 Pa kPa torr atm deg C deg F	AI1(1): Customer specification or inH_2O (68 °F) for DP/GP rng 1, 2, 3) or psi for DP/GP rng 4, 5 AP/644 all rng AI2 deg C		In all Rosemount devices the units of the transducer block is forced to match the unit code.

(1) The host system may write over default values pre-configured by Rosemount Inc.
(2) Assume that when L_Type = Direct, the user configures Out_Scale which is equal to XD_Scale

LCD TRANSDUCER BLOCK

Parameter	Index	Description
ALERT_KEY	4	The identification number of the plant unit.
BLK_TAG_1	15	The tag of the block containing DP1.
BLK_TAG_2	21	The tag of the block containing DP2.
BLK_TAG_3	27	The tag of the block containing DP3.
BLK_TAG_4	33	The tag of the block containing DP4.
BLK_TYPE_1	14	The enumerated block type for DP1's block.
BLK_TYPE_2	20	The enumerated block type for DP2's block.
BLK_TYPE_3	26	The enumerated block type for DP3's block.
BLK_TYPE_4	32	The enumerated block type for DP4's block.
BLOCK_ALM	8	The BLOCK_ALM is used for all configuration, hardware, connection failure or system problems in the block. The cause of the alert is entered in the subcode field. The first alert to become active will set the Active status in the Status attribute. As soon as the Unreported status is cleared by the alert reporting task, another block alert may be reported without clearing the Active status, if the subcode has changed.
BLOCK_ERR	6	This parameter reflects the error status associated with the hardware or software components associated with a block. it is a bit string, so that multiple errors may be shown.
COLLECTION_DIRECTORY	12	A directory that specifies the number, starting indicies, and DD Item ID's of the data collections in each transducer block.
CUSTOM_TAG_1	17	The block description that is displayed for DP1.
CUSTOM_TAG _2	23	The block description that is displayed for DP2.
CUSTOM_TAG _3	29	The block description that is displayed for DP3.
CUSTOM_TAG _4	35	The block description that is displayed for DP4.
CUSTOM_UNITS_1	19	This is the user entered units that are displayed when UNITS_TYPE_1=Custom.
CUSTOM_UNITS _2	25	This is the user entered units that are displayed when UNITS_TYPE_2=Custom.
CUSTOM_UNITS _3	31	This is the user entered units that are displayed when UNITS_TYPE_3=Custom.
CUSTOM_UNITS _4	37	This is the user entered units that are displayed when UNITS_TYPE_4=Custom.
DISPLAY_PARAM_SEL	13	This will determine which Display Parameters are active. Bit 0 = DP1 Bit 1 = DP2 Bit 2 = DP3 Bit 3 = DP4 Bit 4 = Bar Graph enable
MODE_BLK	5	The actual, target, permitted, and normal modes of the block.
PARAM_INDEX_1	16	The relative index of DP1 within its block.
PARAM_INDEX_2	22	The relative index of DP2 within its block.
PARAM_INDEX_3	28	The relative index of DP3 within its block.
PARAM_INDEX_4	34	The relative index of DP4 within its block.
ST_REV	1	The revision level of the static data associated with the function block.
STRATEGY	3	The strategy field can be used to identify grouping of blocks.
TAG_DESC	2	The user description of the intended application of the block.
TRANSDUCER_DIRCTORY	9	A directory that specifies the number and starting indicies of the transducers in the transducer block.
TRANSDUCER_TYPE	10	Identifies the transducer that follows.
UNITS_TYPE_1	18	This parameter determines where the units for the display parameter come from.
UNITS_TYPE_2	24	This parameter determines where the units for the display parameter come from.
UNITS_TYPE_3	30	This parameter determines where the units for the display parameter come from.
UNITS_TYPE_4	36	This parameter determines where the units for the display parameter come from.
UPDATE_EVT	7	This alert is generated by any change to the staic data.
XD_ERROR	11	Provides additional error codes related to transducer blocks.

PID BLOCK

Parameter	Index		Parameter	Index		Parameter	Index
ACK_OPTIONS	46		HI_HI_LIM	49		SP_LO_LIM	22
ALARM_HYS	47		HI_HI_PRI	48		SP_RATE_DN	19
ALARM_SUM	45		HI_LIM	51		SP_RATE_UP	20
ALERT_KEY	4		HI_PRI	50		SP_WORK	68
BAL_TIME	25		IDEADBAND	74		ST_REV	1
BETA	73		IN	15		STATUS_OPTS	14
BIAS	66		LO_ALM	62		STDDEV	75
BKCAL_HYS	30		LO_LIM	53		STRATEGY	3
BKCAL_IN	27		LO_LO_ALM	63		STRUCTURECONFIG	71
BKCAL_OUT	31		LO_LO_LIM	55		T_AOPERIODS	92
BLOCK_ALARM	44		LO_LO_PRI	54		T_AUTO_EXTRA_DT	90
BLOCK_ERR	6		LO_PRI	52		T_AUTO_HYSTERESIS	91
BYPASS	17		MATHFORM	70		T_GAIN_MAGNIFIER	89
CAP_STDDEV	76		MODE_BLK	5		T_HYSTER	87
CAS_IN	18		OUT	9		T_IPGAIN	80
CONTROL_OPS	13		OUT_HI_LIM	28		T_PDTIME	85
DV_HI_ALM	64		OUT_LO_LIM	29		T_PSGAIN	83
DV_HI_LIM	57		OUT_SCALE	11		T_PTIMEC	84
DV_HI_PRI	56		PV	7		T_RELAYSS	88
DV_LO_ALM	65		PV_FTIME	16		T_REQUEST	77
DV_LO_LIM	59		PV_SCALE	10		T_STATE	78
DV_LO_PRI	58		RATE	26		T_STATUS	79
ERROR	67		RCAS_IN	32		T_TARGETOP	86
FF_GAIN	42		RCAS_OUT	35		T_UGAIN	81
FF_SCALE	41		RESET	24		T_UPERIOD	82
FF_VAL	40		ROUT_IN	33		TAG_DESC	2
GAIN	23		ROUT_OUT	36		TRK_IN_D	38
GAMMA	72		SHED_OPT	34		TRK_SCALE	37
GRANT_DENY	12		SP	8		TRK_VAL	39
HI_ALM	61		SP_FTIME	69		UPDATE_EVT	43
HI_HI_ALM	60		SP_HI_LIM	21			

Index

Numerics
275 HART Communicator
Apply AMS Changes 3-6

A
Address 4-2
Temporary Node 4-2
Advanced Diagnostics Transducer Block (ADB) 4-4
Advanced Features 4-13
ADVISE_ACTIVE 4-8
ADVISE_ALM 4-8
ADVISE_ENABLED 4-8
ADVISE_MASK 4-8
ADVISE_PRI 4-8
Advisory Alarms 4-7
ADVISE_ACTIVE 4-8
ADVISE_ALM 4-8
ADVISE_MASK 4-8
ADVISE_PRI 4-8
AI Block.See Analog Input (AI) Function Block
Alarm Priority 4-12
ALARM_TYPE 4-13
Alarms
ADVISE_ACTIVE 4-8
ADVISE_ALM 4-8
ADVISE_MASKParameter
ADVISE_MASK 4-8
ADVISE_PRI 4-8
Advisory 4-7
ALARM_TYPE 4-13
FAILED_ACTIVE 4-7
FAILED_ALARMS 4-6
FAILED_ALM 4-7
FAILED_ENABLED 4-6
FAILED_MASK 4-6
FAILED_PRI 4-7
MAINT_ACTIVE 4-7
MAINT_ALARMS 4-7
MAINT_ALM 4-7
MAINT_ENABLED 4-7
MAINT_MASK 4-7
MAINT_PRI 4-7
PlantWeb 4-6, 4-8
Priorety 4-12
Process 4-12
AMS 3-6
2-Wire RTD Offset 3-11
Alarm and Saturation 3-16
Change Connections 3-8
Change Type 3-8
Device Information 3-12
LCD Meter Options 3-10
Loop Test 3-13
Master Reset 3-14
Multidrop Communication . . . 3-19
Open Sensor Holdoff 3-18
Output Units 3-9
Process Variable Damping . . 3-11, 3-14, ... 3-15
Process Variables 3-7
Review 3-7
Scaled Ouput Trim 3-23
Sensor 1 Serial Number 3-8
Sensor Input Trim 3-20
Terminal Temperature 3-9
Transmitter-Sensor Matching 3- 22
Variable Mapping 3-7
Analog Input (AI) block C-8
Analog Input (AI) Function Block . 4-4, 4-9, ... C-8
ALARM_TYPE 4-13
Block Information C-8
BLOCK_ERR 4-21
Configuration 4-9
OUT_D 4-13
Parameters C-9
PV_FTIME 4-12
Status 4-12

B
BAD if Limited 4-12
BLK_TAG_# 4-14
BLK_TYPE_# 4-14
BLOCK_ERR
AI Block 4-21
Resource Block 4-22

C
Calibration 3-19
Trim 3-19
Capabilities 4-4
Block Execution Times 4-4
Host Timer 4-4
VCRs 4-4
Changing Modes 4-2
Channel 4-9, 4-10
Check Output 3-7
Commissioning 3-2
Failure Mode 3-2
Set Loop to Manual 3-2
Switch Positions 3-3
Configuration 3-3, 3-7
Analog Input (AI) Function Block 4-9
XD_SCALE, OUT_SCALE . .4-9
Channel 4-9
Check Output 3-7
Configuration 3-7
Custom Meter 4-13
Diagnostics 3-13
Direct 4-10
Examples 4-10
Fast Key Sequence 3-5
HART Menu Tree 3-4
Information Variables 3-12
L_TYPE 4-9
Direct 4-9
Indirect 4-9, 4-10
LCD Transducer Block 4-13
Resource Block 4-4
Review Configuration Data 3-7
Service 3-13
Considerations 1-3
Commissioning 1-3
Electrical 1-3
Environmental 1-3
Temperature 1-3
General 1-3
Mechanical 1-3
Location 1-3
Special Mounting 1-3
Custom meter configuration 4-13
CUSTOM_TAG_# 4-14
CUSTOM_UNITS_# 4-14

D
Damping 4-9
Diagnostic Messages 3-24
Hardware 3-24
LCD Display 3-29
Diagnostics and Service 3-13
Diagram
Sensor Wiring 2-11
Direct 4-9, 4-10
DISPLAY_PARAM_SEL 4-13

E
Examples, Configuration 4-10
Typical Pressure 4-12
Execution Times 4-4

F
FAILED_ACTIVE alarms 4-7
FAILED_ALARMS 4-6
FAILED_ACTIVE 4-7
FAILED_ALM 4-7
FAILED_ENABLED 4-6
FAILED_MASK 4-6
FAILED_PRI 4-7
FAILED_ALM 4-7
FAILED_ENABLED alarms 4-6
FAILED_MASK alarms 4-6
FAILED_PRI alarms 4-7
Failure Mode 3-2
Fast Key Sequence 3-5
FEATURES
FEATURES_SEL 4-6
Features 4-5
Advanced 4-13
FEATURES, FEATURES_SEL . . 4-5
Features 4-5
Reports 4-5
Soft W Lock, Hard W Lock 4-5
Unicode 4-5
Filtering 4-12
AI block 4-12
Foundation fieldbus function blocks . . 4-4
FREE_SPACE 4-3

G
General Block Information
Block Instantiation 4-2
Capabilities 4-2
Link Active Scheduler 4-2
Modes 4-2
Ground the Transmitter 3-2
Grounded
Thermocouple 2-15
Ungrounded
Millivolt 2-14
RTD/Ohm 2-14
Thermocouple 2-14

H
Hardware 3-24
Diagnostic Messages 3-24
Maintenance 3-24
HART Communicator
Check Output 3-7
Commands
2-Wire RTD Offset 3-11
50/60 Hz Filter 3-9
Active Calibrator 3-14
Alarm 3-15
Date 3-12
Descriptor 3-12
HART Output 3-15
Intermittent Threshold . . . 3-16
LCD Meter Options 3-9
Loop Test 3-13
Master Reset 3-14
Message 3-12
Open Sensor Holdoff 3-18
Output Trim 3-23
Process Variables 3-7
PV Damping 3-10
PV Range Values 3-16
Rerange 3-16
Review 3-7
Saturation 3-15
Scaled Output Trim 3-23
Select Sensor Type 3-8
Sensor Input Trim 3-20
Sensor Matching 3-21
Sensor Review 3-14
Sensor Serial Number 3-8
Set Output Units 3-8
Tag 3-12
Terminal Temperature 3-9
Test Device 3-13
Variable Mapping 3-7
Write Protect 3-15
Configuration 3-7
see Configuration 3-3
Diagnostics 3-13
Fast Key Sequence 3-5
Hart Menu Tree 3-4
Information Variables 3-12
Review Configuration Data . . . 3-7
Service 3-13
HART Menu Tree 3-4
Hazardous Locations Installations
Installation drawings B-10
HI_HI_LIM 4-12
HI_HI_PRI 4-12
HI_LIM 4-12
HI_PRI 4-12

I
Indirect 4-9, 4-10
Information Variables 3-12
Installation 2-4
European 2-4
Head Mount 2-4
Flowchart 2-2
LCD Display 2-8
Multichannel 2-9
North American 2-5
Head Mount 2-5
Rail Mount 2-6, 2-7
Instantiation, Block 4-3
Intermittent Sensor Detect 3-17

L
L_TYPE 4-9
. . . . . 4-9, 4-10
LCD Display
Diagnostic Messages 3-29
Installation 2-8
LCD meter 4-13
LCD Transducer Block . . 4-4, 4-13, C-12
Messaging 4-13
Parameters C-12
LCD Transducer block 4-23
Block Error 4-23
Self Test 4-23
LIM_NOTIFY 4-6
Limited
Bad 4-12
Uncertain 4-12
Link Active Scheduler 4-3
LO_LIM 4-12
LO_LO_LIM 4-12
LO_LO_PRI 4-12
LO_PRI 4-12
Lower Trim Method 4-17

M
MAINT_ACTIVE 4-7
MAINT_ALARMS 4-7
MAINT_ACTIVE 4-7
MAINT_ALM 4-7
MAINT_ENABLED 4-7
MAINT_MASK 4-7
MAINT_PRI 4-7
MAINT_ALM 4-7
MAINT_ENABLED 4-7
MAINT_MASK 4-7
MAINT_PRI 4-7
Maintenance 3-24
Manual Mode 4-20
Manual Operation 4-14
MAX_NOTIFY 4-6
LIM_NOTIFY 4-6
Methods 4-14

Millivolt
Ungrounded 2-14
Wiring 2-11
MODE_BLK.TARGET 4-2
MODE_BLOCK.ACTUAL 4-2
Modes
Changing Modes 4-2
Permitted Modes 4-2
Types of Modes 4-2
Auto 4-2
Man 4-2
Other 4-2
Out of Service 4-2
Mounting 2-3
Model 644H
DIN Rail 2-3
Threaded Sensor 2-3
Multichannel
Installation 2-9
Multidrop Communication 3-18

N

Network Parameters 4-4
Node address 4-2

O

Ohm
Ungrounded 2-14
Wiring 2-11
Operation and Maintenance
Sensor Transducer Block . . . 4-17
OUT_D 4-13
AI block 4-13
Overview 1-2
Manual 1-2
Transmitter 1-2

P

PARAM_INDEX_# 4-14
Parameter
ADVISE_ACTIVE 4-8
ADVISE_ALM 4-8
ADVISE_ENABLED 4-8
ADVISE_PRI 4-8
ALARM_TYPE 4-13
Analog Input (AI) Function Block . . C-9
BLK_TAG_# 4-14
BLK_TYPE_# 4-14
BLOCK_ERR 4-21, 4-22
CHANNEL 4-9
CUSTOM_TAG_# 4-14
CUSTOM_UNITS_# 4-14
DEFINE_WRITE_LOCK 4-5
DISPLAY_PARAM_SEL 4-13
FAILED_ACTIVE 4-7
FAILED_ALARMS 4-6
FAILED_ALM 4-7
FAILED_ENABLED 4-6
FAILED_MASK 4-6
FAILED_PRI 4-7
FEATURES 4-5
FEATURES_SEL 4-6
FREE_SPACE 4-3
HI_HI_LIM 4-12
HI_HI_PRI 4-12
HI_LIM 4-12
HI_PRI 4-12
L_TYPE 4-9, 4-10
LCD Transducer Block C-12
LIM_NOTIFY 4-6
LO_LIM 4-12
LO_LO_LIM 4-12
LO_LO_PRI 4-12
LO_PRI 4-12
MAINT_ACTIVE 4-7
MAINT_ALARMS 4-7
MAINT_ALM 4-7
MAINT_ENABLED 4-7
MAINT_MASK 4-7
MAINT_PRI 4-7
MAX_NOTIFY 4-6
MODE_BLK.TARGET 4-2
MODE_BLOCK_ACTUAL 4-2
Network 4-4
OUT_D 4-13
OUT_SCALE 4-9
PARAM_INDEX_# 4-14
PV_FTIME 4-9, 4-12
RECOMMENDED_ACTION . . 4-8
REPORTS 4-5
Resource Block C-2
Sensor Transducer Block C-5
STATUS_OPTIONS 4-12
UNICODE 4-5
UNITS_TYPE_# 4-14
WRITE_LOCK 4-5
XD_SCALE 4-9
Performance specifications A-3
Permitted Modes 4-2
PID Block 4-4
PID block 4-4
PlantWeb Alarms 4-6, 4-8
Advisory 4-7
FAILED_ALARMS 4-6
MAINT_ALARMS 4-7
Power Supply 2-13
Ground 3-2
Surges 3-2
Transients 3-2
Process Alarms 4-12
Propagate Fault Forward 4-12
Proportional/Integral/Derivative (PID) function block 4-4
PV_FTIME 4-9
AI block 4-12

R

Recommended Actions 4-8
PlantWeb Alarms 4-8
RECOMMENDED_ACTION 4-8
Reference data A-9
Reports 4-5
Resource Block 4-4, 4-22, C-1
Block Errors 4-22
Block Information C-1
Configuration 4-4
Detailed Status 4-22
FEATURES, FEATURES_SEL .4-5
Parameters C-2
BLOCK_ERR 4-22
Summary Status 4-22
Resource block C-1
Return of Materials 1-4
Review Configuration Data 3-7
RTD
Ungrounded 2-14
Wiring 2-11

S

Security 4-5
Self Test 4-23
Sensor
Connection
Diagram 2-11
Millivolt 2-11
Ohm 2-11
RTD 2-11
Thermocouple 2-11
Wiring 2-11
Sensor Calibration 4-17

Sensor Transducer Block . . 4-4, 4-9, 4-17, ... C-5
Block Information C-5
Configuration 4-9
Operation and Maintenance . . 4-17
Parameters C-5
Set
Loop to Manual 3-2
Simulate 4-20
Simulation 4-20
Manual Mode 4-20
Soft W Lock, Hard W Lock 4-5
Specifications
Performance A-3
Status 4-20
AI block 4-12
STATUS_OPTIONS 4-12
Supported Units 4-10
Surges/Transients 3-2
Switches
Simulate 4-20

T
Thermocouple
Grounded 2-15
Ungrounded 2-14
Wiring 2-11
Transmitter-Sensor Matching . . 3-21
Trim
Zero 4-9
Trim the Transmitter 3-19
Output Trim 3-23
Scaled Output Trim 3-23
Sensor Input Trim 3-20
Transmitter-Sensor Matching . 3-21
Troubleshooting 4-15
Flowchart 4-15
LCD Transducer block 4-23
Reference table 4-15
Resource Block 4-22
Types of Modes
Auto 4-2
Man 4-2
Other Types of Modes 4-2
Out of Service 4-2

U
Uncertain
Limited 4-12
Man Mode 4-13
Unicode 4-5
UNITS_TYPE_# 4-14
Upper Trim Method 4-17

V
Virtual Communication Relationship (VCRs) 4-4
Network Parameters 4-4

W
Wiring 2-9
Sensor Connection 2-11
Diagram 2-11
Millivolt 2-11
Ohm 2-11
RTD 2-11
Thermocouple 2-11

X
XD_SCALE 4-9
XD_SCALE, OUT_SCALE 4-9
L_TYPE
Direct 4-10

Z
Zero Trim 4-9

Standard Terms and Conditions of Sale can be found at www.rosemount.com/terms_of_sale
The Emerson logo is a trademark and service mark of Emerson Electric Co.
Rosemount and the Rosemount logotype are registered trademarks of Rosemount Inc.
PlantWeb is a registered trademark of one of the Emerson Process Management group of companies.
FOUNDATION is a trademark of the Fieldbus Foundation.
HART is a registered trademark of the HART Communication Foundation.
Lexan and Noryl are registered trademark of General Electric.
WAGO is a registered trademark of Kontakttechnik GmbH, Germany.
All other marks are the property of their respective owners.

© 2010 Rosemount Inc. All rights reserved.

Emerson Process Management

Rosemount Inc.
8200 Market Boulevard
Chanhassen, MN 55317 USA
T (U.S.) 1-800-999-9307
T (International) (952) 906-8888
F (952) 949-7001

www.rosemount.com

Emerson Process Management Temperature GmbH
Frankenstrasse 21
63791 Karlstein
Germany
T 49 (6188) 992 0
F 49 (6188) 992 112

Emerson Process Management Asia Pacific Private Limited
1 Pandan Crescent
Singapore 128461
T (65) 6777 8211
F (65) 6777 0947
Enquiries@AP.EmersonProcess.com

00809-0100-4728 Rev KA, 07/10

EMERSON
Process Management

GCS-FCV-305

FLOWSERVE®

NAF-Setball Ball Sector Valve

Fk41.51(14)US

NAF-Setball Ball Sector Valve

Providing wide control rangeability, precise accuracy and inherently high flow characteristics with low total life cycle costs in punishing media and pressure conditions

Well suited for modulating control applications in corrosive, slurry, fibrous and viscous media

Design Flexibility

The simple, rugged and reliable NAF-Setball can be specified to meet precise application needs. Combining the best control characteristics of ball and butterfly valves, the NAF-Setball offers extraordinary flexibility. It is available in either flanged or wafer body styles. While CF8M is standard, CG8M, Titanium, and others are offered. There is a choice of metallic or non-metallic seat rings along with PTFE, FPM or EDPM seat seals. Stem sealing options include graphite packing. Metaloplast (PTFE reinforced with stainless steel) stem bearings may be specified.

Application Flexibility

The excellent performance characteristics of NAF-Setball valves are particularly beneficial in demanding process conditions where:

- medium contains abrasive solids or particulates
- erosive cavitation occurs in a corrosive environment
- control applications involve high pressure drops
- a wide range of control is required

One-Piece Body

One-piece, leak-proof CF8M body is standard. It can be mounted in a vertical pipeline to avoid the settling or straining of fibrous or particulate matter.

Characterized Ball

Hard-chromium plated CF8M characterized ball provides accurate control over a wide range, even at low flow rates in viscous, solids-laden media.

Integral Stem Bearings

The trunion mounted ball with hard-chromium plated stems and integral bearings improves stability and reliability while reducing torque and actuation costs. Metaloplast bearings are available for high cycle – high-speed operation and heavy vibration conditions.

NAF-Setball Ball Sector Valve

Tight Shutoff

Large area seat rings with cup-style seat seals provide reliably tight shutoff. Alloy 6 seat rings deliver ASME (ANSI) Class V shutoff while the PTFE arrangement provides bubble-tight ASME (ANSI) Class VI performance. The rotary action of the ball creates a wiping or shearing action against the seal to cut fibers and wipe away solids buildup.

Leak-tight Stem Seal

O-rings stem seals provide positive sealing with no maintenance. In addition a choice of conventional braided PTFE or Graphite packings are available.

Direct Mounting

Actuator mounts directly to the NAF standard mounting pad to simplify installation. The result is a trim, compact package with improved controllability and rigidity.

Cost Efficiency

High C_v may permit use of smaller valves. Low operating torque reduces actuation size. Simple, rugged valve design keeps maintenance to a minimum.

Table I: Technical Specifications

Size range	Wafer: 1-8 inches (25-200 mm) Flange: 3-16 inches (80-400 mm)
Pressure ratings	ASME Class 150-300 (PN 10-40)
Installation methods	Wafer type and Flanged type
Temperature range	To 435°F (225°C)
Test pressure	1.5 x ASME with valve open
	1.1 x ASME with valve closed
	Face-to-face lengths
Wafer	IEC 534-3-2
Flanged	IEC 534-3-2
	Sealing Class
PTFE seats	ISO 5208-2 Rate A DIN 3230 BN, Leak Rate 1
Metal seats	IEC 534-4 Class IV-S1

Table II: Materials of Construction

Parts	Materials
Backing ring	PTFE
Ball sector	EN 1.4408/CF8M hard-chromium plated
Bearing seat	EN 1.4460
Body	EN 1.4408/CF8M
Bolt	A4
Bottom cover	EN 1.4408/CF8M
Box packing	Graphite
Compression spring	EN 1.4436
Gasket	Graphite
Gland cover	EN 1.4408/CF8M
Indicating pin	Stainless steel
Key	Steel
Locking segment	EN 1.4436
Nut	A4
O-ring	EPDM/FPM
Screw	A4
Seat ring/Backup ring	PTFE/Stainless steel
Seat ring	Stellite
Seat seal	PTFE/EPDM/FPM
Stem bearings	Metal-O-Plast
Stem, upper/lower	EN 1.4460 hard-chromium plated
Thread insert	Stainless steel
Washer	A4

Table III: Additional Information

Description	Data Sheet
Direct-mounting pneumatic actuators	Fk74.59
Pneumatic and electro-pneumatic valve positioner	Fk41.82
Intelligent valve positioner	Fk41.85
Intelligent on/off controller	Fk41.86
Solenoid valves	Fk79.17
Electrical position indication, terminal box	Fk79.10

NAF-Setball Ball Sector Valve

Materials

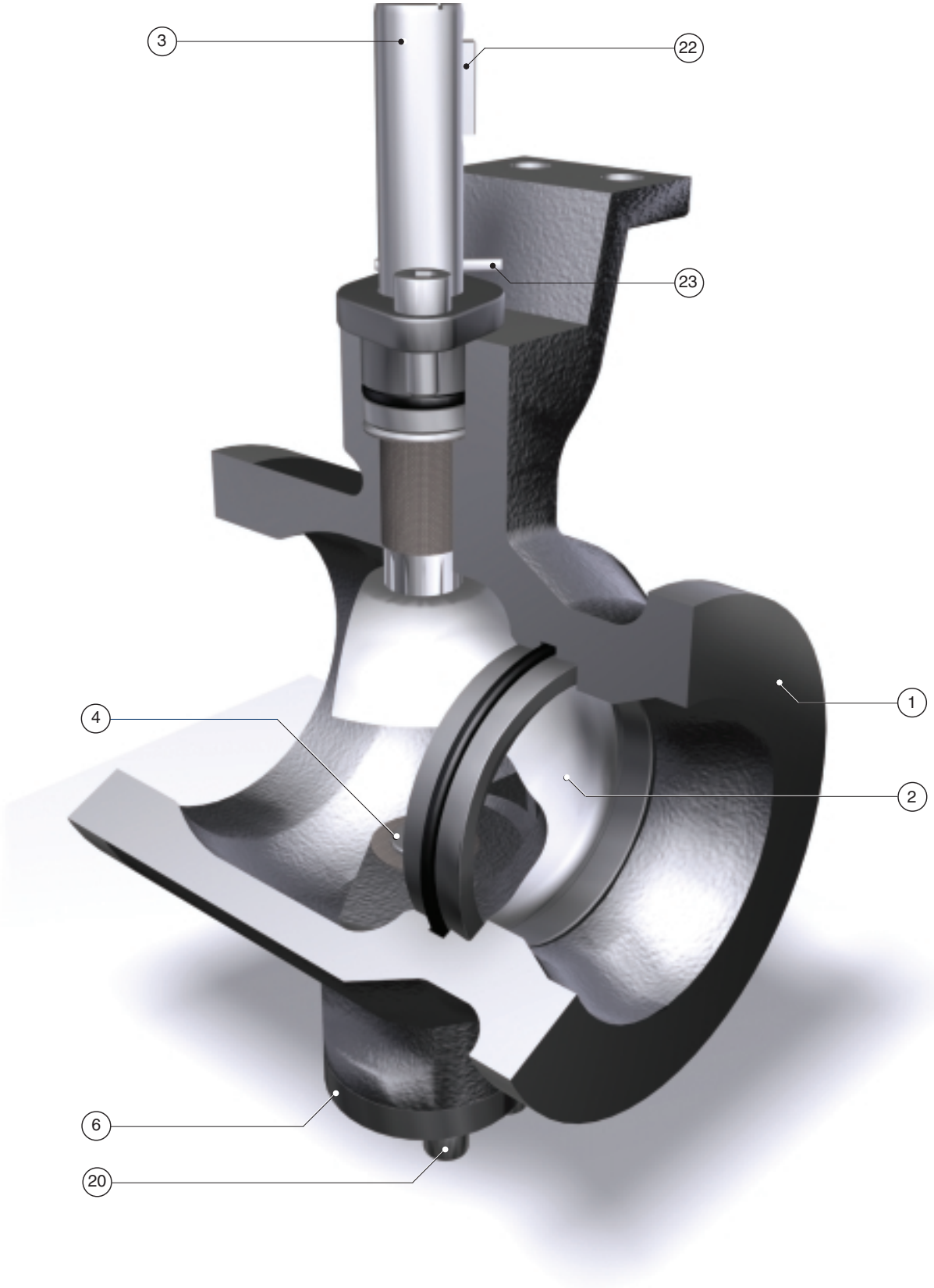

NAF-Setball Ball Sector Valve

Seat ring

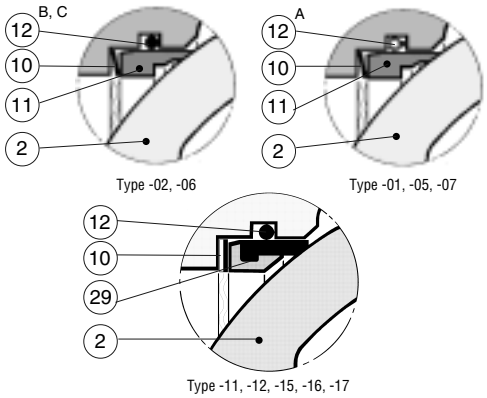

Type -02, -06

Type -01, -05, -07

Type -11, -12, -15, -16, -17

Stem sealing

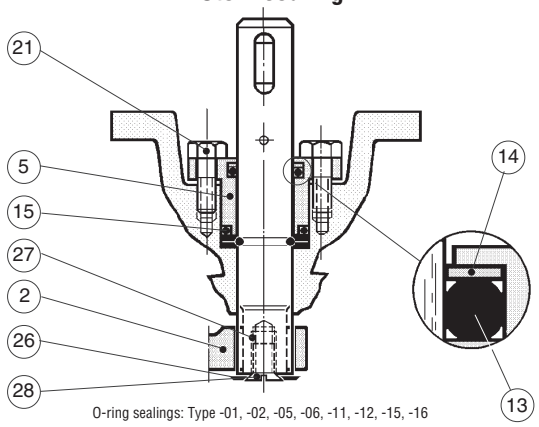

O-ring sealings: Type -01, -02, -05, -06, -11, -12, -15, -16

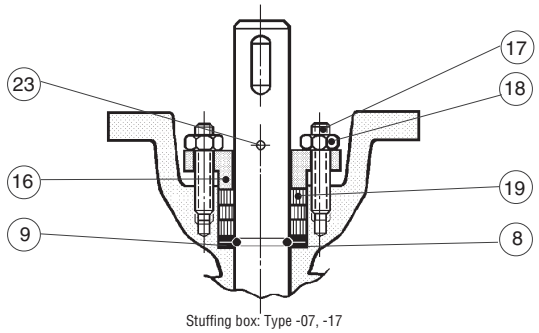

Stuffing box: Type -07, -17

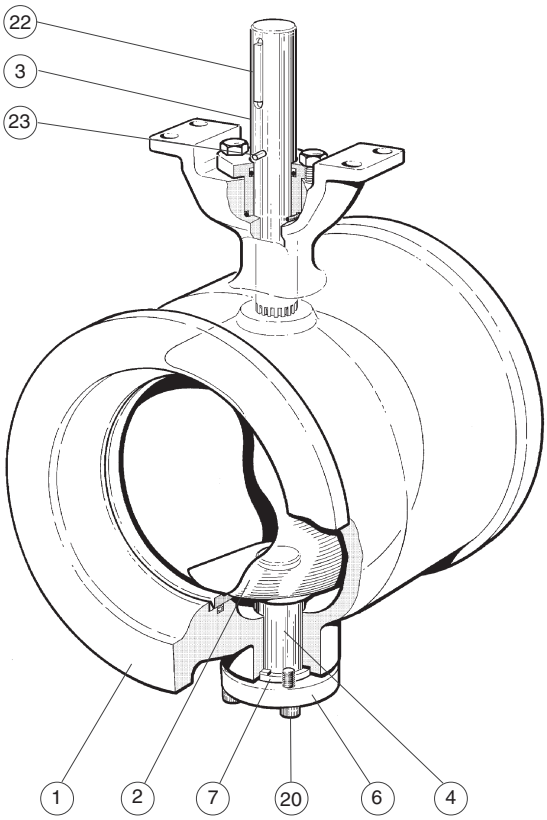

Table IV: Detailed Materials of Construction

Item	Qty	Part	Material	Sealing type
1	1	Body	EN 1.4408/CF8M	
2	1	Ball sector	EN 1.4408/CF8M hcp*	01,02,05,06,07
2	1	Ball sector	EN 1.4408/CF8M	11,12,15,16,17
3	1	Stem, upper	EN 1.4460 hcp*	
4	1	Stem, lower	EN 1.4460 hcp*	
5	1	Gland cover	EN 1.4408/CF8M	01,02,05,06,11, 12,15,16
6	1	Bottom cover	EN 1.4408/CF8M	
7	1	Gasket	Graphite	
8	1	Locking segment	EN 1.4436	
9	1	Bearing seat	EN 1.4460	
10	1	Compression spring	EN 1.4436	
11	1	Seat ring	Stellite	01,02,05,06,07
12A	1	Seat seal	PTFE	01,05,07,11,15,17
12B	1	Seat seal	EPDM	02,12
12C	1	Seat seal	FPM	06,16
13A	1	O-ring	EPDM	01,02,11,12
13B	1	O-ring	FPM	05,06,15,16
14	1	Backing ring	PTFE	01,02,05,06,11, 12,15,16
15A	1	O-ring	EPDM	01,02,11,12
15B	1	O-ring	FPM	05,06,15,16
16	1	Gland cover	EN 1.4408/CF8M	07,17
17	2	Bolt	A4	07,17
18	2	Nut	A4	07,17
19	1	Box packing	Graphite	07,17
20	4	Bolt	A4	
21	2	Bolt	A4	01,02,05,06,11, 12,15,16
22	1	Key	Steel	
23	1	Indicating pin	Stainless steel	
24		Stem bearings	Metal-O-Plast	B-utförande
25				
26	1	Washer	A4	
27	1	Thread insert	Stainless steel	
28	1	Screw	A4	
29	1	Seat ring/ Backup ring	PTFE/Stainless steel	11,12,15,16,17

* hcp = Hard-chromium plated

NAF-Setball Ball Sector Valve

Working pressure, differential pressure and temperature

The maximum working pressure and temperature in the body depends on pressure class according to respective flange standard. Maximum differential pressure, valve closed, depends on temperature as shown in the diagram and is valid for all sizes. Maximum differential pressure for control service and sizes 4-16 inches (100-400 mm) depends on size and temperature as shown in the diagram. Valves with PTFE seat are further limited as shown in the diagram.

- Maximum differential pressure, closed valve (all sizes)
- Maximum differential pressure for control service
- Maximum diffrential pressure/temperature, PTFE seat ring

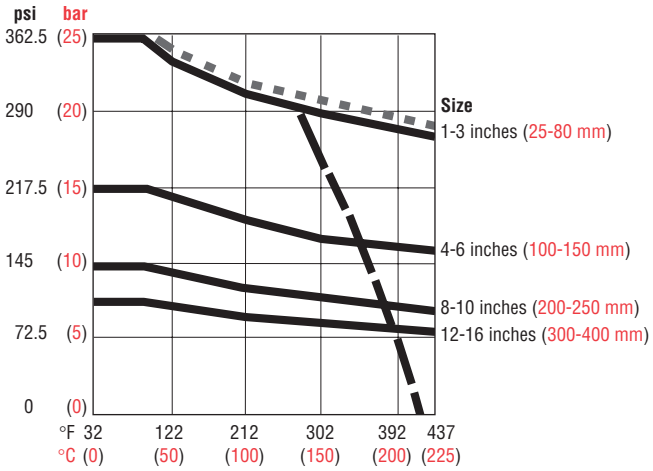

Figure I: Working pressure, differential pressure and temperature

Table V: Flow Capacities and Characteristics

Size (inches / mm)	C_v (K_v) at an opening angle of								
	15°	20°	30°	40°	50°	60°	70°	80°	90°
1	0.1	0.1	0.4	0.8	1.4	2.09	3.02	4.1	5.9
25/10	-	0.1	0.3	0.7	1.2	1.8	2.6	3.5	5.1
1	0.6	0.8	1.4	2.3	3.8	5.1	6.5	9.6	13
25/15	0.5	0.7	1.2	2	3.3	4.4	5.6	8.3	11.2
1	0.2	0.4	1	2.7	4.8	8.2	11.6	17.4	25.5
25/20	0.2	0.3	0.9	2.3	4.1	7.1	10	15	22
1.5	1.2	2.4	5.9	11	17.4	26.7	38.3	61.5	75.4
40	1	2.1	5.1	9.5	15	23	33	53	65
2	1.9	3.7	9.5	17.4	29	44.1	61.5	98.6	120
50	1.6	3.2	8.2	15	25	38	53	85	103
–	2.9	4.6	9.3	19.7	31.3	51	75.4	114	168
65	2.5	4	8	17	27	44	65	98	145
3	4.6	9.3	20.9	37.1	60.3	90.5	128	174	284
80	4	8	18	32	52	78	110	150	245
4	10.4	17.4	36	61.5	96.3	144	209	295	481
100	9	15	31	53	83	124	180	254	415
6	29	46.4	90.5	157	246	360	516	713	1125
150	25	40	78	135	212	310	445	615	970
8	34.8	58	128	232	360	545	777	1067	1450
200	30	50	110	200	310	470	670	920	1250
10	38.3	92.8	232	391	667	963	1334	1810	2877
250	33	80	200	337	575	830	1150	1560	2480
12	101	201	452	760	1154	1637	2239	2993	4594
300	87	173	390	655	995	1410	1930	2580	3960
14	146	290	655	1096	1659	2361	3225	4304	6618
350	126	250	565	945	1430	2035	2780	3710	5705
16	198	394	887	1491	2262	3213	4391	5858	9007
400	171	340	765	1285	1950	2770	3785	5050	7765

NAF-Setball Ball Sector Valve

Operating torque

The minimum design torque for selecting the actuator is that stated in the table for a differential pressure of 43.5 psi (3 bar). The specified torques are for **clean media**. For **steam** increase the torque 20 percent in the table at right. For **pulp** consult your Flowserve representative.

Sizing of control valves

We have a Windows based valve calculation program which is advanced but very easy to use. This program can be ordered through your Flowserve representative.

Use *Performance!* valve sizing software for sizing information according to trim characteristic, body rating, and flow direction.

Table VI: Operating Torque (ft-lbs / Nm)

Size (in / mm)	Differential pressure (psi / bar)				
	43.5 (3)	145 (10)	217.5 (15)	290 (20)	362.5 (25)
1	5.2	8.9	12.5	15.5	18.4
25	7	12	17	21	25
1.5	5.9	11.1	15.5	19.9	23.6
40	8	15	21	27	32
2	7.4	14.0	19.2	22.9	28.0
50	10	19	26	31	38
–	14.0	25.8	33.2	44.3	51.6
65	19	35	45	60	70
3	16.2	33.2	44.3	59.0	70.1
80	22	45	60	80	95
4	22.1	44.3	62.7	81.1	99.6
100	30	60	85	110	135
6	55.3	114	155	199	240
150	75	155	210	270	325
8	103	225	310	395	479
200	140	305	420	535	650
10	184	398	553	701	856
250	250	540	750	950	1160
12	317	653	893	1132	1379
300	430	885	1210	1535	1870
14	464	977	1417	1710	2076
350	629	1325	1921	2318	2815
16	658	1350	1944	2339	2833
400	892	1830	2635	3171	3841

NAF-Setball Ball Sector Valve

Dimension and Weight

Wafer Version

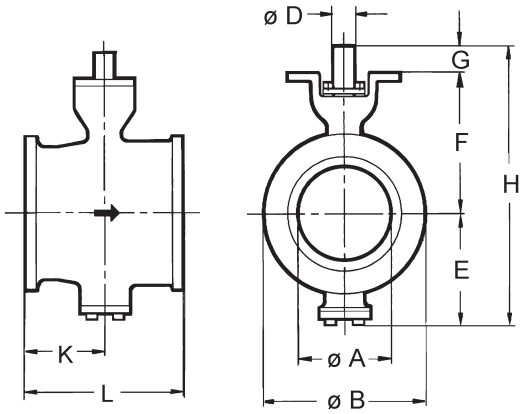

Flanged Version

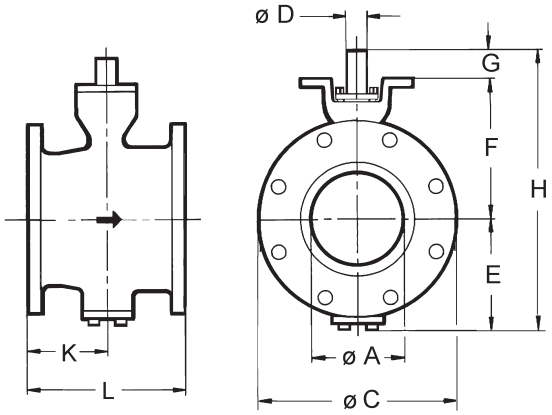

NAF Standard for Actuator Mounting

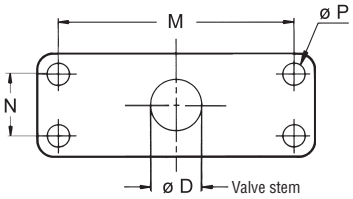

Table VII: Dimension and Weight

Size (in / mm)	Dimensions (inches / mm)													Weight (lb / kg)	
	A	B	C*	D	E	F	G	H	K	L	M	N	P	Wafer	Flanged[1]
1	0.8	2.6		0.8	2.4	4.7	1.7	8.9	2	4	4.5	1.2	0.4	8.8	
25[2]	20	65		20	60	120	43	225	51	102	115	30	11	4	
1.5	1.3	3.4		0.8	3	4.9	1.7	9.6	2.2	4.5	4.5	1.2	0.4	12.1	
40	32	86		20	75	125	43	245	57	114	115	30	11	5.5	
2	1.6	4.1		0.8	3.5	5.2	1.7	10.4	2.4	4.9	4.5	1.2	0.4	14.3	
50	40	105		20	90	131	43	265	62	124	115	30	11	6.5	
–	2	4.8		0.8	3.9	5.5	1.7	11.1	2.7	5.3	4.5	1.2	0.4	19.8	
65	50	122		20	101	139	43	283	68	135	115	30	11	9	
3	2.8	5.2		0.8	4.3	5.7	1.7	11.8	3.3	6.5	4.5	1.2	0.4	25.4	39.7
80	70	132	*	20	110	145	43	300	83	165	115	30	11	11.5	18
4	3.4	6.4		0.8	4.7	6.6	1.7	13.1	3.8	7.6	4.5	1.2	0.4	34.2	55.1
100	85	162	*	20	120	167	43	332	97	194	115	30	11	15.5	25
6	5.1	8.5		1	6.1	7.9	2	15.7	4.5	9	4.5	1.2	0.4	57.3	90.4
150	130	218	*	25	155	195	50	400	115	229	115	30	11	26	41
8	6.7	10.7		1.2	7.3	9.3	2.3	18.9	5.1	9.57	6.3	1.6	0.6	92.6	141
200	170	273	*	30	185	236	59	480	130	543	160	40	14	42	64
10	8.2			1.4	9.1	11.6	2.6	23.2	6.1	11.7	6.3	1.6	0.6		221
250	208		*	35	230	295	65	590	155	597	160	40	14		100
12	10.2			1.6	10.2	12.6	3.2	26	7.2	13.3	8.4	2.4	0.7		320
300	258		*	40	260	320	80	660	183	338	214	60	18		145
14	11.1			1.8	11.4	14.2	3.7	29.2	7.9	14.6	8.4	2.4	0.7		384
350	282		*	50	290	360	93	742	200	370	214	60	18		174
16	12.4			1.8	12.1	15.1	3.7	30.7	8.8	15.8	8.4	2.4	0.7		465
400	316		*	50	308	383	93	784	224	400	214	60	18		211

* See respective flange diameter according to Fk90.20
[1] ASME CLASS 150 (PN 10)
[2] For DN 25/20, 25/15, 25/10

NAF-Setball Ball Sector Valve

Actuators

NAF-Setball is available with hand levers or with pneumatic or electric actuators and accessories.

Use the following tables for selecting the hand levers and standard pneumatic actuators.

If other pneumatic or electric actuators are required, consult your Flowserve representative.

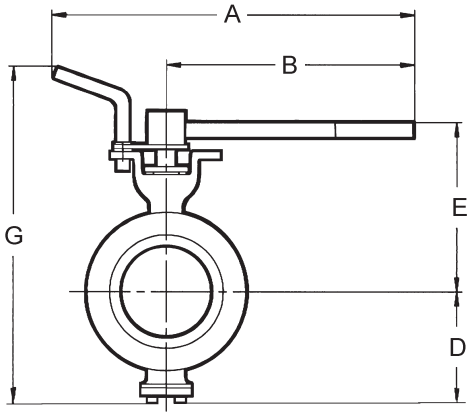

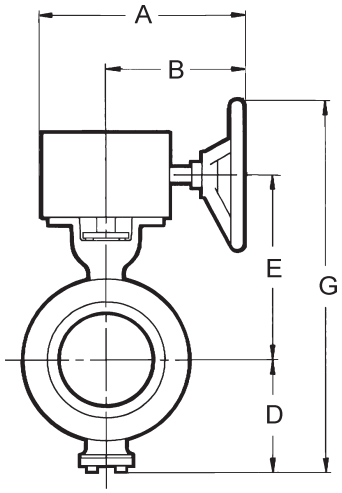

Table VIII: NAF-Setball Valves with Hand Levers

Size (inches / mm)		Max. ΔP (psi / bar)		NAF No.	Dimensions (inches / mm)										Weight (lb / kg)[1]	
					A		B		D		E		G[1]			
Hand lever as per Fk70.51 (NAF No. 791020)																
1	25	363	25	-2	19.7	500	13.8	350	2.4	60	6.2	158	11.8	300	13.2	6
1.5	40	363	25	-2	19.7	500	13.8	350	3	75	6.4	163	12.6	320	16.5	7.5
2	50	363	25	-2	19.7	500	13.8	350	3.5	90	6.6	168	13.4	340	18.7	8.5
–	65	363	25	-2	19.7	500	13.8	350	4	101	6.9	176	13.7	348	24.3	11
3	80	363	25	-2	19.7	500	13.8	350	4.3	110	7.2	183	14.8	375	28.7	13
4	100	363	25	-2	19.7	500	13.8	350	4.7	120	8.1	205	19.6	497	39.7	18
6	150	145	10	-3	19.7	500	13.8	350	6.1	155	9.2	233	18.5	470	57.3	26
8	200	73	5	-4	24.2	615	17.7	450	7.3	185	10.7	273	21.7	550	99.2	45
Worm gear actuator as per FK70.74[2] (NAF No. 791009)																
1	25	363	25	-0014	9	227	6.7	169	2.4	60	6.7	170	13	330	19.9	9
1.5	40	363	25	-0014	9	227	6.7	169	3	75	6.9	175	13.8	350	24.3	11
2	50	363	25	-0014	9	227	6.7	169	3.5	90	7.1	181	14.6	370	26.5	12
–	65	363	25	-0014	9	227	6.7	169	4	101	7.4	189	15.4	390	30.9	14
3	80	363	25	-0014	9	227	6.7	169	4.3	110	7.7	195	16	405	37.4	17
4	100	363	25	-0014	9	227	6.7	169	4.7	120	8.5	217	17.2	437	46.3	21
6	150	363	25	-0015	9	227	6.7	169	6.1	155	9.6	245	19.7	500	68.3	31
8	200	363	25	-0026	11.7	298	8.8	223	7.3	185	11.5	292	24.7	627	115	52
10	250	305	21	-0027	11.7	298	8.8	223	9.1	230	13.9	352	28.8	732	243	110
		363	25	-0043	13.7	347	9.8	248	9.1	230	14.4	365	30.3	770	258	117
12	300	174	12	-0028	11.7	298	8.8	223	10.2	260	15.4	390	31.5	800	342	155
		363	25	-0044	13.7	347	9.8	248	10.2	260	14.8	377	32	812	357	162
14	350	363	25	-0052	18	457	13	331	11.4	290	16.7	425	37.3	948	459	208
16	400	363	25	-0052	18	457	13	331	12.1	308	17.8	453	39	990	761	345

[1] DN 25-200 Wafer version
DN 250-400 Flanged version, ASME Class 150 (PN 10)
[2] Available with locking device. Contact Flowserve.

NAF-Setball Ball Sector Valve

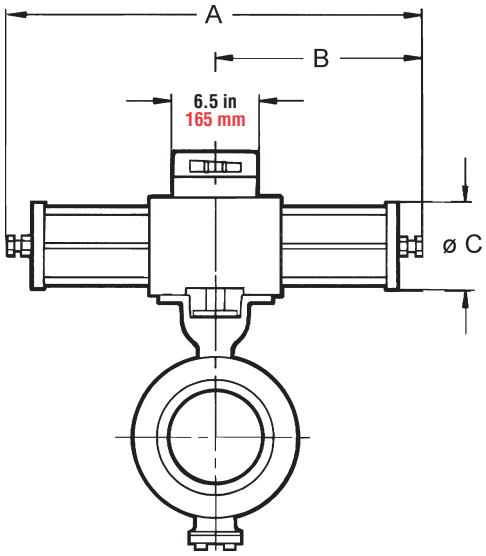

NAF 791290

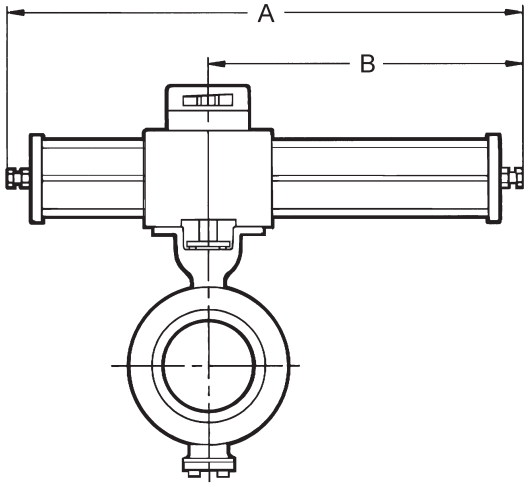

NAF 791292/94

Table IX: NAF-Setball Valves with Pneumatic Actuators

Size (in / mm)		Max ΔP (psi / bar)						NAF No.	Dimensions (inches / mm)																Weight (lb / kg)[2]	
		58	4	72.5	5	87	6		A		B		C		D		E		F		G[1]		H			
Double-acting as per Fk74.59 (NAF No. 791290)																										
1	25	363	25	363	25	363	25	-0220	14.6	370	7.3	185	3.2	80	2.4	60	6.7	170	8.7	222	14.8	377	1.6	40	17.6	8
1.5	40	363	25	363	25	363	25	-0220	14.6	370	7.3	185	3.2	80	3	75	6.9	175	10.9	277	15.6	397	1.6	40	22	10
2	50	363	25	363	25	363	25	-0220	14.6	370	7.3	185	3.2	80	3.5	90	7.1	180	9.2	233	16.5	418	1.6	40	24.2	11
–	65	363	25	363	25	363	25	-0220	14.6	370	7.3	185	3.2	80	4	101	7.4	189	9.5	241	17.2	437	1.6	40	28.7	13
3	80	290	20	363	25	363	25	-0220	14.6	370	7.3	185	3.2	80	4.3	110	7.7	195	9.5	241	17.6	446	1.6	40	35.3	16
4	100	203	14	261	18	319	22	-0220	14.6	370	7.3	185	3.2	80	4.7	120	8.5	217	10.6	269	19.1	484	1.6	40	44	20
		363	25	363	25	363	25	-1220	19.3	490	9.6	245	3.9	100	4.7	120	8.7	222	11	279	19.4	493	1.6	40	48.5	22
6	150			58	4	102	7	-0225	14.6	370	7.3	185	3.2	80	6.1	155	9.6	245	11.7	296	21.5	546	1.6	40	66.1	30
		160	11	203	14	261	18	-1225	19.3	490	9.6	245	3.9	100	6.1	155	9.8	250	12	306	21.9	556	1.6	40	70.6	32
		363	25	363	25	363	25	-2225	27.6	700	13.8	350	5.7	145	6.1	155	10.9	278	13.5	343	24.9	633	2.5	63	94.8	43
8	200	160	11	203	14	261	18	-2130	27.6	700	13.8	350	5.7	145	7.3	185	12.2	310	15.1	383	26.1	663	2.5	63	130	59
		363	25	363	25	363	25	-2230	27.6	700	13.8	350	5.7	145	7.3	185	12.2	310	15.1	383	26.1	663	2.5	63	130	59
10	250	72.5	5	102	7	131	9	-2135	27.6	700	13.8	350	5.7	145	9.1	230	14.6	370	17.4	443	30.3	768	2.5	63	258	117
		189	13	247	17	290	20	-2235	27.6	700	13.8	350	5.7	145	9.1	230	14.6	370	17.4	443	30.3	768	2.5	63	258	117
		319	22	363	25	363	25	-3135	32.3	820	16.1	410	7.9	200	9.1	230	15.6	395	19.5	495	32.3	820	3	75	284	129
12	300					58	4	-2140	27.6	700	13.8	350	5.7	145	10.2	260	15.6	395	18.3	466	32.3	821	2.5	63	357	162
		102	7	131	9	160	11	-2240	27.6	700	13.8	350	5.7	145	10.2	260	15.6	395	18.3	466	32.3	821	2.5	63	357	162
		363	25	363	25	363	25	-3240	32.3	820	16.1	410	7.9	200	10.2	260	16.5	420	20.5	520	34.4	875	3	75	384	174
14	350	247	17	319	22	363	25	-3250	32.3	820	16.1	410	7.9	200	11.4	290	19.3	490	24.4	620	39.6	1005	3.9	100	483	219
		363	25	363	25	363	25	-4250	43.7	1110	21.9	555	10.2	260	11.4	290	19.3	490	24.4	620	39.6	1005	3.9	100	483	219
16	400	160	11	218	15	363	25	-3250	32.3	820	16.1	410	7.9	200	12.1	308	19	483	24.1	613	40	1016	3	75	529	240
		363	25	363	25	363	25	-4250	43.7	1110	21.9	555	10.2	260	12.1	308	20.2	513	25.3	643	41.2	1046	3.9	100	564	256

[1] Including NAF valve positioner
[2] DN 25-200 Wafer version
DN 250-400 Flanged version, ASME Class 150 (PN 10)

The below stated ΔP apply for clean media type water.
For other media contact Flowserve; see also page 3.

NAF-Setball Ball Sector Valve

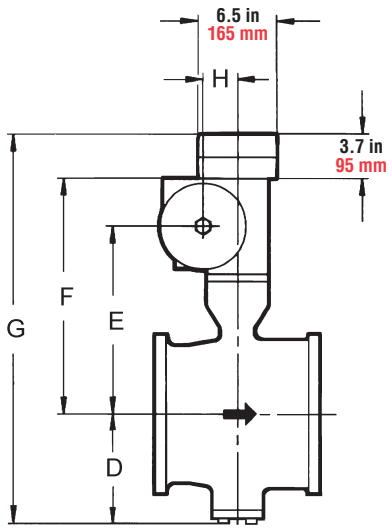

Table X: NAF-Setball Valves with Pneumatic Actuators

Size (in / mm)		Max ΔP (psi / bar)						NAF No.	Dimensions (inches / mm)																Weight (lb / kg)[2]	
		58	4	72.5	5	87	6		A		B		C		D		E		F		G[1]		H			
Single-acting, spring to close as per Fk74.59 (NAF No. 791292)																										
1	25	363	25	363	25	363	25	-0220	17.9	455	10.6	270	3.2	80	2.4	60	6.7	170	8.7	222	14.8	377	1.6	40	19.8	9
1.5	40	363	25	363	25	363	25	-0220	17.9	455	10.6	270	3.2	80	3	75	6.9	175	8.9	227	15.6	397	1.6	40	24.3	11
		363	25	363	25	363	25	-1220	25	635	15.3	390	3.9	100	3	75	7.1	180	9.3	237	15.9	406	1.6	40	33.1	15
2	50	261	18	363	25	363	25	-0220	17.9	455	10.6	270	3.2	80	3.5	90	7.1	180	9.2	233	16.4	418	1.6	40	26.5	12
		363	25	363	25	363	25	-1220	25	635	15.3	390	3.9	100	3.5	90	7.3	185	9.6	243	16.7	426	1.6	40	35.3	16
–	65	116	8	305	21	363	25	-0220	17.9	455	10.6	270	3.2	80	4	101	7.4	189	9.5	241	17	434	2.5	63	30.9	14
		363	25	363	25	363	25	-1220	25	635	15.3	390	3.9	100	4	101	7.6	194	9.9	251	17.4	444	3	75	39.7	18
3	80	58	4	232	16	290	20	-0220	17.9	455	10.6	270	3.2	80	4.3	110	7.7	195	9.7	247	17.5	446	1.6	40	37.5	17
		319	22	363	25	363	25	-1220	25	635	15.3	390	3.9	100	4.3	110	7.9	200	10.1	257	18.1	462	1.6	40	46.3	21
4	100			145	10	203	14	-0220	17.9	455	10.6	270	3.2	80	4.7	120	8.5	217	10.5	269	19	484	1.6	40	46.3	21
		218	15	334	23	363	25	-1220	25	635	15.3	390	3.9	100	4.7	120	8.7	222	10.9	279	19.4	493	1.6	40	55.2	25
6	150	58	4	102	7	160	11	-1225	25	635	15.3	390	3.9	100	6.1	155	9.8	250	12	306	21.8	556	1.6	40	77.2	35
		363	25	363	25	363	25	-2225	35	890	21.2	540	5.7	145	6.1	155	10.6	270	13.5	343	23.3	593	2.5	63	108	49
8	200	189	13	319	22	363	25	-2230	35	890	21.2	540	5.7	145	7.3	185	12.2	310	15	383	26.1	663	2.5	63	143	65
		363	25	363	25	363	25	-3230	41.3	1050	25.2	640	7.9	200	7.3	185	13.2	336	17.1	436	28.1	716	3	75	187	85
10	250	87	6	145	10	203	14	-2235	35	890	21.2	540	5.7	145	9.1	230	14.5	370	17.4	443	30.2	768	2.5	63	271	123
		348	24	363	25	363	25	-3235	41.3	1050	25.2	640	7.9	200	9.1	230	15.6	395	19.4	495	32.2	820	3	75	315	143
12	300			73	5	102	7	-2240	35	890	21.2	540	5.7	145	10.2	260	15.6	395	18.3	466	32.3	821	2.5	63	370	168
		189	13	319	22	363	25	-3240	41.3	1050	25.2	640	7.9	200	6.3	160	165	420	20.4	520	34.4	875	3	75	414	188
14	350	87	6	189	13	261	18	-3250	41.3	1050	25.2	640	7.9	200	11.4	290	18.1	460	22	560	37.2	945	3	75	478	217
		261	18	363	25	363	25	-4250	59.8	1520	37.9	965	10.2	260	11.4	290	19.3	490	24.4	620	39.5	1005	3.9	100	604	274
16	400	58	4	116	8	174	12	-3250	41.3	1050	25.2	640	7.9	200	8.2	208	19	483	24.1	613	40	1016	3	75	559	254
		174	12	305	21	348	24	-4250	59.8	1520	37.9	965	10.2	260	12.1	308	20.2	513	25.3	643	41.1	1046	3.9	100	685	311
		363	25	363	25	363	25	-5250	87	2210	53.9	1370	15.5	395	12.1	308	21.6	548	28	713	43.9	1116	5.9	150	1534	696

[1] Including NAF valve positioner
[2] DN 25-200 Wafer version
DN 250-400 Flanged version, ASME Class 150 (PN 10).

The below stated ΔP apply for clean media type water.
For other media contact Flowserve; see also page 3.

NAF-Setball Ball Sector Valve

Table XI: NAF-Setball Valves with Pneumatic Actuators

Size (in / mm)		Max ΔP (psi / bar)						NAF No.	Dimensions (inches / mm)																Weight (lb / kg)[2]	
		58	4	72.5	5	87	6		A		B		C		D		E		F		G[1]		H			
Single-acting, spring to open as per Fk74.59 (NAF No. 791294)																										
1	25	290	20	363	25	363	25	-0220	17.9	455	10.6	270	3.2	80	2.4	60	6.7	170	9	228	15.1	383	1.6	40	19.8	9
		363	25	363	25	363	25	-1220	25	635	15.4	390	3.9	100	2.4	60	6.9	175	9.1	232	15.2	387	1.6	40	28.7	13
1.5	40	203	14	363	25	363	25	-0220	17.9	455	10.6	270	.32	80	3	75	6.9	175	9.1	232	15.8	402	1.6	40	24.3	11
		363	25	363	25	363	25	-1220	25	635	15.4	390	3.9	100	3	75	7.1	180	9.3	236	16	406	1.6	40	33.1	15
2	50	160	11	363	25	363	25	-0220	17.9	455	10.6	270	3.2	80	3.5	90	7.1	180	9.3	237	16.6	422	1.6	40	26.5	12
		363	25	363	25	363	25	-1220	25	635	15.4	390	3.9	100	3.5	90	7.3	185	9.5	241	16.8	426	1.6	40	35.3	16
–	65	58	4	247	17	334	23	-0220	17.9	455	10.6	270	3.2	80	4	101	7.4	189	9.5	241	17.1	434	1.6	40	30.9	14
		203	14	363	25	363	25	-1220	25	635	15.4	390	3.9	100	4	101	7.6	194	9.9	251	17.5	444	2.5	63	39.7	18
3	80			160	11	160	11	-0220	17.9	455	10.6	270	3.2	80	4.3	110	7.7	195	10	253	18	458	1.6	40	37.5	17
		131	9	363	25	363	25	-1220	25	635	15.4	390	3.9	100	4.3	110	7.9	200	10.1	257	18.2	462	1.6	40	46.3	21
4	100	87	6	261	18	348	24	-1220	25	635	15.4	390	3.9	100	4.7	120	8.7	222	10.9	278	23.3	593	1.6	40	55.1	25
		363	25	363	25	363	25	-0220	35	890	21.3	540	5.7	145	4.7	120	9.5	242	12.4	315	20.9	530	2.5	63	86	39
6	150			73	5	116	8	-1225	25	635	15.4	390	3.9	100	6.1	155	9.8	250	12	306	21.9	556	1.6	40	77.2	35
		189	13	363	25	363	25	-2225	35	890	21.3	540	5.7	145	6.1	155	10.6	270	13.5	343	23.3	593	2.5	63	108	49
8	200	72.5	5	247	17	319	22	-2230	35	890	21.3	540	5.7	145	7.3	185	12.2	310	15.1	383	26.1	663	2.5	63	143	65
		305	21	363	25	363	25	-3230	41.3	1050	25.2	640	7.9	200	7.3	185	13.2	336	17.2	436	28.2	716	3	75	187	85
10	250			116	8	160	11	-2235	35	890	21.3	540	5.7	145	9.1	230	14.6	370	17.4	443	30.2	768	2.5	63	271	123
		160	11	363	25	363	25	-3235	41.3	1050	25.2	640	7.9	200	7.3	185	13.2	336	17.2	436	28.2	716	3	75	315	143
12	300			58	4	87	6	-2240	35	890	21.3	540	5.7	145	10.2	260	15.6	395	18.3	466	32.3	821	2.5	63	370	168
		87	6	261	18	261	18	-3240	41.3	1050	25.2	640	7.9	200	10.2	260	16.5	420	20.5	520	34.4	875	3	75	414	188
		218	15	363	25	363	25	-4240	59.8	1520	38	965	10.2	260	10.2	260	17.6	448	22.8	580	36.8	935	4	100	540	245
14	350			87	6	160	11	-3250	41.3	1050	25.2	640	7.9	200	11.4	290	18.1	460	22	560	35.6	905	3	75	478	217
		72.5	5	218	15	363	25	-4250	59.8	1520	38	965	10.2	260	11.4	290	19.3	490	24.4	620	39.6	1005	3.9	100	604	274
		363	25	363	25	363	25	-5250	87	2210	53.9	1370	15.6	395	11.4	290	20.7	525	27.2	690	42.3	1075	5.9	150	1453	659
16	400			145	10	261	18	-4250	59.8	1520	38	965	10.2	260	12.1	308	20.2	513	25.3	643	41.2	1046	3.9	100	686	311
		247	17	363	25	363	25	-5250	87	2210	53.9	1370	15.6	395	12.1	308	21.6	548	28.1	713	43.9	1116	5.9	150	1534	696

[1] Including NAF valve positioner
[2] DN 25-200 Wafer version
DN 250-400 Flanged version, ASME Class 150 (PN 10)

The below stated ΔP apply for clean media type water.
For other media contact Flowserve see also page 3.

NAF-Setball Ball Sector Valve

Accessories

NAF's pneumatic actuators, see data sheet Fk74.59 can be equipped with a large number of accessories.

The following are included in NAF's standard program and are suitable for direct mounting to NAF pneumatic actuators.

Valve positioner

Pneumatic and electro-pneumatic valve positioner, see data sheet Fk41.82.

Intelligent valve positioner, see data sheet Fk41.85.

Intelligent on/off controller, see data sheet Fk41.86.

Solenoid valves

See data sheet Fk79.17.

Electrical position indication

See data sheet Fk79.10.

Terminal box

The actuator can be equipped with a junction box (part number 349 20 930) of cast aluminium containing terminal blocks for NAF-Setball Ball Sector Valves connecting the solenoid valve and position sensors.

NAF-Setball Ball Sector Valve

Ordering Information

Example:

Code	87	8	0	A	B	-	0100	-	02
	1	2	3	4	5		6		7

1. Valve type
87 NAF-Setball

2. Material (Body)
8 Stainless steel CF8M

3. Pressure rating

Wafer version[1]	**Size**
0 ASME 150 (PN 10-16)	6-8 inches (150-200 mm)
ASME 150 (PN 10-25)	3-4 inches (80-100 mm)
ASME 150-300 (PN 10-40)	1-2 inches (25-65 mm)
Flanged version	
2 PN 10	8-16 inches (200-400 mm) 3-6 inches (80-150 mm choose PN 16)
3 PN 16	3-16 inches (80-400 mm)
4 ASME Class 150	3-16 inches (80-150 mm)
5 PN 25	8-16 inches (80-400 mm) choose PN 40)
6 PN 40	3-16 inches (80-400 mm)
7 ASME Class 300	3-16 inches (80-400 mm)

4. Stem bearing

Body	**Stem**
A -	Hard-chromium plated
B Metaloplast bearing	

5. Body type
B Wafer
F Flanged

6. Size

Wafer and flanged			
ASME version (inches)		**DIN version (mm)**	
-	-	2510	25/10
-	-	2515	25/15
-	-	2520	25/20
-	-	0040	40
-	-	0050	50
-	-	0065	65
0003	3	0080	80
0004	4	0100	100
0006	6	0150	150
0008	8	0200	200
0010	10	0250	250
0012	12	0300	300
0014	14	0350	350
0016	16	0400	400

7. Seals

Seat ring	**Seat Seal**	**Stem seal**	**Max. temp.**
01 Alloy 6	PTFE	EPDM	400°F (200°C)
02 Alloy 6	EPDM	EPDM	300°F (150°C)
05 Alloy 6	PTFE	FPM (Viton)	400°F (200°C)
06 Alloy 6	FPM (Viton)	FPM (Viton)	300°F (150°C)
07 Alloy 6	PTFE	Graphite	435°F (225°C)
11 PTFE	PTFE	EPDM	400°F (200°C*)
12 PTFE	EPDM	EPDM	300°F (150°C*)
15 PTFE	PTFE	FPM (Viton)	400°F (200°C*)
16 PTFE	FPM (Viton)	FPM (Viton)	300°F (150°C*)
17 PTFE	PTFE	Graphite	435°F (225°C*)

* See Pressure, temperature diagram
[1] The valve can be mounted between all flanges mentioned for respective sizes. The mark plate will include the highest pressure ratings in both PN and ASME (ANSI) together with dimensions in imperical and metric sizes.

NAF-Setball Ball Sector Valve

NAF-Setball Ball Sector Valve

Flowserve Corporation has established industry leadership in the design and manufacture of its products. When properly selected, this Flowserve product is designed to perform its intended function safely during its useful life. However, the purchaser or user of Flowserve products should be aware that Flowserve products might be used in numerous applications under a wide variety of industrial service conditions. Although Flowserve can (and often does) provide general guidelines, it cannot provide specific data and warnings for all possible applications. The purchaser/user must therefore assume the ultimate responsibility for the proper sizing and selection, installation, operation and maintenance of Flowserve products. The purchaser/user should read and understand the Installation Operation Maintenance (IOM) instructions included with the product, and train its employees and contractors in the safe use of Flowserve products in connection with the specific application.

While the information and specifications presented in this literature are believed to be accurate, they are supplied for informative purposes only and should not be considered certified or as a guarantee of satisfactory results by reliance thereon. Nothing contained herein is to be construed as a warranty or guarantee, express or implied, regarding any matter with respect to this product. Because Flowserve is continually improving and upgrading its product design, the specifications, dimensions and information contained herein are subject to change without notice. Should any question arise concerning these provisions, the purchaser/user should contact Flowserve Corporation at any of its worldwide operations or offices.

For more information, contact:

For more information about Flowserve and its products, contact www.flowserve.com or call USA 972 443 6500.

Regional Headquarters

1350 N. Mt. Springs Prkwy.
Springville, UT 84663
Phone 801 489 8611
Facsimile 801 489 3719

12 Tuas Avenue 20
Republic of Singapore 638824
Phone (65) 862 3332
Facsimile (65) 862 4940

12, av. du Québec, B.P. 645
91965, Courtaboeuf Cedex, France
Phone (33 1) 60 92 32 51
Facsimile (33 1) 60 92 32 99

Quick Response Centers

5114 Railroad Street
Deer Park, TX 77536 USA
Phone 281 479 9500
Facsimile 281 479 8511

104 Chelsea Parkway
Boothwyn, PA 19061 USA
Phone 610 497 8600
Facsimile 610 497 6680

1300 Parkway View Drive
Pittsburgh, PA 15205 USA
Phone 412 787 8803
Facsimile 412 787 1944

Flowserve and NAF are registered trademarks of Flowserve Corporation.

 © 2003 Flowserve Corporation. Flowserve Corporation, NAF Control Products, Tel. USA 801 489 8611

ELOMATIC ®

ELQ SERIES ACTUATOR

CONTENTS / INHALT / *INHOUD*

SAFETY INSTRUCTIONS AND REGULATIONS / SICHERHEITSVORSCHRIFTEN / *VEILIGHEIDSAANWIJZINGEN EN -VOORSCHRIFTEN* **3**

1 IDENTIFICATION / TYPENSCHILD / *IDENTIFICATIE* **7**

2 PRINCIPLES OF OPERATION / FUNKTIONSPRINZIP / *WERKPRINCIPES* **8**
2.1 Drive principle / Antriebsprinzip / *Aandrijvingsprincipe* 8
2.2 Manual override / Handbetrieb / *Handbediening* 9
2.3 Operation times / Betriebszeiten / *Looptijden* 10
2.4 Electronic control unit / Elektronische Steuereinheit / *Elektronische besturingseenheid* 11

3 MOUNTING THE ELQ UNIT ON A VALVE / MONTAGE DER ELQ-EINHEIT AUF EINE ARMATUR / *ELQ-AANDRIJVING OP EEN AFSLUITER MONTEREN* **13**

4 STROKE ADJUSTMENT / EINSTELLEN DES DREHWINKELS / *SLAGINSTELLING* ... **15**
4.1 Setting of switches and mechanical limit stops / Einstellen der Schalter und der mechanischen Endstops / *Schakelaars en mechanische eindaanslagen instellen* 16
4.2 Torque setting / Einstellen des Drehmoments / *Moment instellen* 19

5 CONNECTING CONTROL SIGNALS / ANSCHLIESSEN DER STEUERSIGNALE / *STUURSIGNALEN AANSLUITEN* **20**
5.1 Connecting “Open” and “Close” control signals / Anschließen der Steuersignale “Öffnen” und “Schließen” / *“Open” en “dicht” stuursignalen aansluiten* 21
5.2 Limit switches for position indicating / Endlagenschalter zur Endlagenanzeige / *Eindschakelaars voor positie-aanduiding* 22

6 CONNECTING POWER SUPPLY / ANSCHLIESSEN DER NETZSPANNUNG / *VOEDINGSSPANNING AANSLUITEN* **24**
6.1 Main fuse replacement / Auswechseln der Hauptsicherung / *Hoofdzekering vervangen* 27

7 PARTS LIST / STÜCKLISTE / *STUKLIJSTEN* ***28***

APPENDIX
A Wiring diagram / **Verdrahtungsplan** / *Bedradings diagram* 32
B Layout of Electronic Control Unit / **Übersicht über die elektronische Bedieneinheit** / Overzicht besturingseenheid 34

SAFETY INSTRUCTIONS AND REGULATIONS / SICHERHEITSVORSCHRIFTEN / *VEILIGHEIDSAANWIJZINGEN EN -VOORSCHRIFTEN*

General

EL-O-Matic accepts no liability for any damage or physical injury caused by non-compliance with the safety instructions in this manual or by carelessness during installation, operation, adjustment and maintenance of the machine. Depending on specific working conditions, additional precautions may be necessary. As EL-O-Matic has no direct control over specific machine applications, operation or maintenance conditions, it is the operator's responsibility to practice all applicable safety rules.
Please inform EL-O-Matic immediately if you have dealt with unsafe situations that have not been described. It is the sole responsibility of the operator to ensure that the local health and safety regulations are adhered to.

Allgemeines

EL-O-Matic haftet nicht für Schäden oder Verletzungen, die durch Nichtbeachtung der Sicherheitsvorschriften in dieser Anleitung oder durch Nachlässigkeit bei der Installation, dem Betrieb, dem Einstellen oder der Wartung und Instandhaltung dieser Maschine verursacht wurden. Je nach den spezifischen Arbeitsumständen sind möglicherweise weitere, ergänzende Sicherheitsmaßnahmen erforderlich. Da EL-O-Matic keinen direkten Einfluß auf die einzelnen Anwendungen der Maschine bzw. die Betriebs- und Wartungsbedingungen hat, ist der Bediener dafür verantwortlich, daß alle geltenden Sicherheitsvorschriften eingehalten werden. Bitte informieren Sie EL-O-Matic unverzüglich über Gefahrensituationen, die in dieser Anleitung nicht beschrieben wurden. Der Bediener trägt die alleinige Verantwortung dafür, daß die örtlichen Gesundheits- und Sicherheitsvorschriften eingehalten werden.

Algemeen

EL-O-Matic aanvaardt geen aansprakelijkheid voor welke schade of welk lichamelijk letsel dan ook, veroorzaakt door het niet naleven van de veiligheidsaanwijzingen in deze handleiding of door onvoorzichtigheid tijdens het installeren, bedienen, afstellen en onderhouden van de machine. Afhankelijk van de specifieke werkomstandigheden, kunnen extra voorzorgsmaatregelen noodzakelijk zijn. Aangezien EL-O-Matic geen directe controle heeft over specifieke machinetoepassingen, bedienings- of onderhoudsvoorwaarden, is het de verantwoordelijkheid van de bediener om alle van toepassing zijnde veiligheidsvoorschriften in de praktijk na te leven.
Stel EL-O-Matic direct op de hoogte als u met onveilige situaties te maken hebt gehad, die niet zijn beschreven. Het is uitsluitend de verantwoordelijkheid van de bediener om te garanderen dat de lokale gezondheids- en veiligheidsvoorschriften worden nageleefd.

Repair

- Repair work - other than the operations outlined in this manual - is strictly reserved to qualified EL-O-Matic personnel.

Warning
The electronic parts of the ELQ-actuator or the options can be damaged by a discharge of static electricity. Before you start touch a grounded metal surface to become static free.

Reparaturen

- Reparaturarbeiten, die nicht in dieser Anleitung beschrieben werden, sind ausschließlich Fachleuten von EL-O-Matic vorbehalten.

Achtung
Die elektronischen Teile des ELQ-Antriebs oder des Zubehörs können durch Entladung von statischer Elektrizität beschädigt werden. Berühren Sie daher vor Beginn der Arbeiten eine geerdete Metallfläche, so daß Sie frei von statischer Elektrizität sind.

Reparatie

- *Reparatiewerkzaamheden - behalve de werkzaamheden die in deze handleiding zijn geschetst - mogen uitsluitend door gekwalificeerd EL-O-Matic personeel worden uitgevoerd.*

Waarschuwing
De elektronische onderdelen van de ELQ-aandrijving of de optionele onderdelen kunnen worden beschadigd door een ontlading van statische elektriciteit. Raak, voordat u begint, een geaard metalen vlak aan om statisch vrij te zijn.

Storage / Lagerung / *Opslag*

Warehouse storage

- Actuators should be stored in a clean, dry warehouse free from excessive vibration and rapid temperature change.
- Actuators should not be stored on any floor surface.
- In areas of high humidity the actuator should have a packet of desiccant placed in the motor compartment, (this will absorb excessive moisture).

On site storage

- Actuators should be stored in a clean, dry location free from excessive vibration and rapid temperature change.
- Ensure all actuator covers are in place and securely fastened.
- If power is not available, place a packet of desiccant in the motor compartment (replace and securely fasten cover).
- Replace plastic conduit plugs with appropriate pipe plugs.

Lagerung im Lager

- Antriebe sind in einem sauberen, trockenen Lager ohne starke Schwingungen und schnelle Temperaturwechsel zu lagern.
- Antriebe nicht auf dem Boden lagern.
- In Gegenden mit hoher Luftfeuchtigkeit ist der Antrieb mit einem Päckchen Trockenmittel im Motorgehäuse zu lagern (dies absorbiert übermäßige Feuchtigkeit).

Lagerung vor Ort

- Antriebe sind an einem sauberen, trockenen Ort ohne starke Schwingungen und schnelle Temperaturwechsel zu lagern.
- Sorgen Sie dafür, daß alle Abdeckungen des Antriebs angebracht und gut befestigt sind.
- Wenn kein Strom vorhanden ist, legen Sie ein Päckchen Trockenmittel in das Motorgehäuse (setzen Sie die Abdeckung wieder auf und befestigen Sie sie gut).
- Ersetzen Sie die Kunststoffstopfen in den Kabeleinführungen durch entsprechende Rohrleitungsstopfen.

Opslag in magazijn

- *Aandrijvingen dienen in een schoon, droog magazijn te worden opgeslagen, vrij van overmatige trillingen en snelle temperatuurschommelingen.*
- *Aandrijvingen mogen niet op welk vloeroppervlak dan ook worden opgeslagen.*
- *Op plaatsen met een hoge vochtigheid dient een pakje met droogmiddel in de motorkamer van de aandrijving te worden geplaatst (dit zal overmatig vocht absorberen).*

Opslag ter plekke

- *Aandrijvingen dienen op een schone, droge plek te worden opgeslagen, vrij van overmatige trillingen en snelle temperatuurschommelingen.*
- *Zorg ervoor dat alle afdekkingen van de aandrijving op hun plaats zitten en stevig zijn bevestigd.*
- *Als er geen stroom is, plaats dan een pakje met droogmiddel in de motorkamer (plaats afdekking opnieuw en zet deze stevig vast).*
- *Vervang kunststof leidingpluggen door geschikte buispluggen.*

Note
Failure to follow proper storage guidelines will void warranty.

Lubrication
Lubrication is not needed. El-O-Matic utilises a permanently lubricated gear case and is lubricated for the normal life at the actuator.

Hinweis
Bei Nichtbeachten der Lagervorschriften wird die Garantie nichtig.

Schmierung
Der Antrieb braucht nicht geschmiert zu werden. El-O-Matic verwendet ein Getriebe mit Dauerschmierung, daß für die normale Lebensdauer des Antrieb ausreichend ist.

Opmerking
Bij het niet opvolgen van de juiste opslagaanwijzingen vervalt de garantie.

Smering
Smering is niet nodig. El-O-Matic maakt gebruik van een permanent gesmeerde overbrengingskast die is gesmeerd voor de normale levensduur van de aandrijving.

1 IDENTIFICATION / TYPENSCHILD / *IDENTIFICATIE*

1.1.1

Weatherproof version / **Wettergeschützte Ausführung** / *Weerbestendige uitvoering*

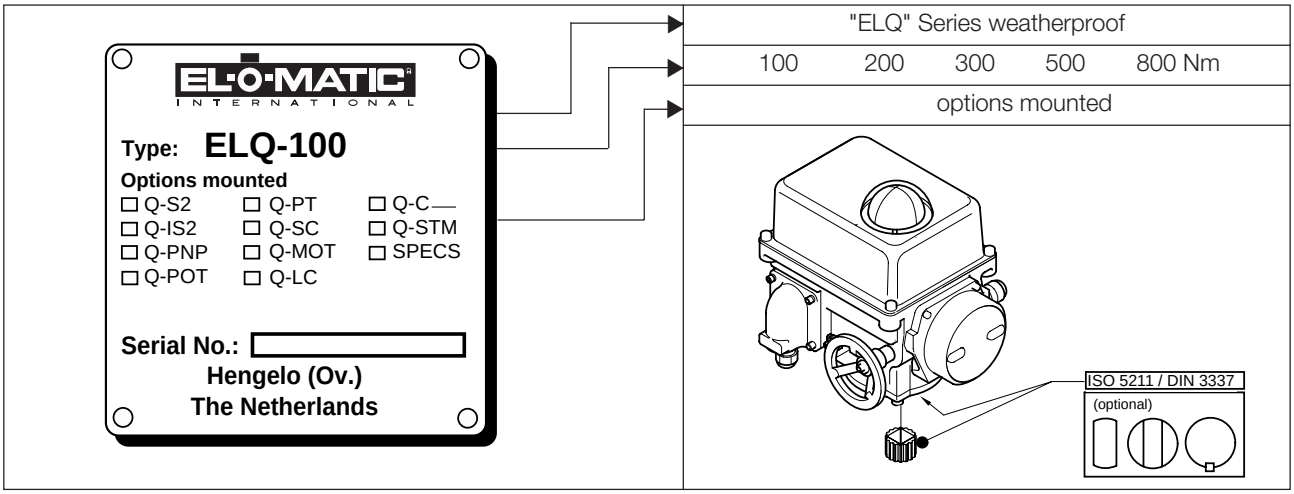

1.1.1

1.1.2

Explosionproof version / **Explosionsgeschützte Ausführung** / *Explosievaste uitvoering*

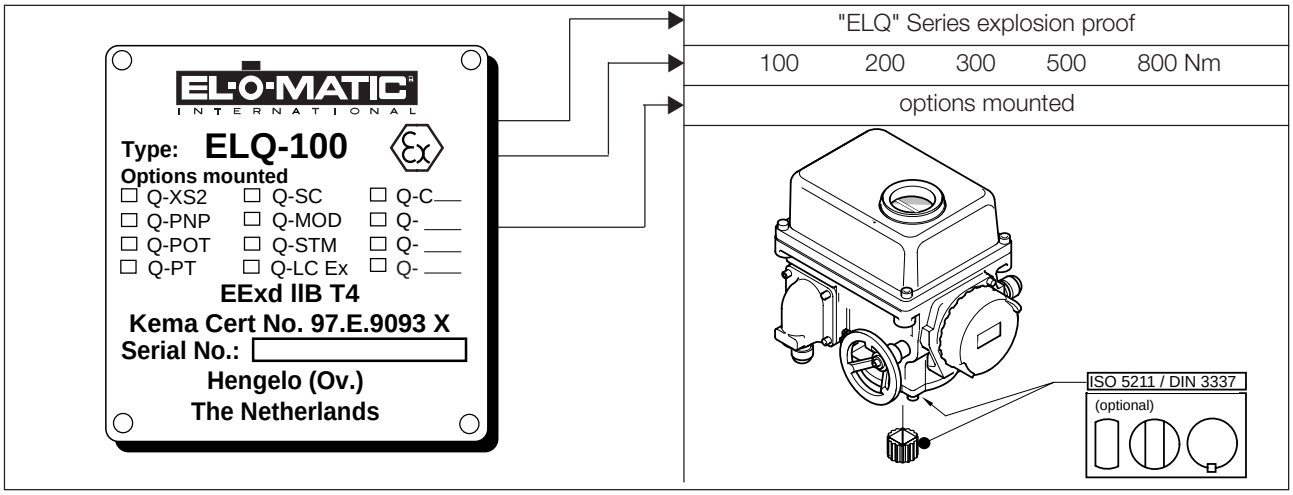

1.1.2

Warning

Actuator must be isolated electronically before any (dis)assembly is begun. Before mounting or (dis)assembling the actuator consult the relevant sections of this manual.

Achtung

Vor dem Zusammen- oder Auseinanderbau muß der Antrieb elektronisch getrennt sein. Lesen Sie vor dem Zusammen- oder Auseinanderbau des Antriebs die betreffenden Abschnitte in dieser Anleitung.

Waarschuwing

Aandrijving moet elektronisch geïsoleerd worden, voordat deze wordt ge(de)monteerd. Raadpleeg de relevante delen van deze handleiding, alvorens de aandrijving te (de)monteren.

2 PRINCIPLES OF OPERATION / FUNKTIONSPRINZIP / *WERKINGSPRINCIPES*

2.1 Drive principle / Antriebsprinzip / *Aandrijvingsprincipe*

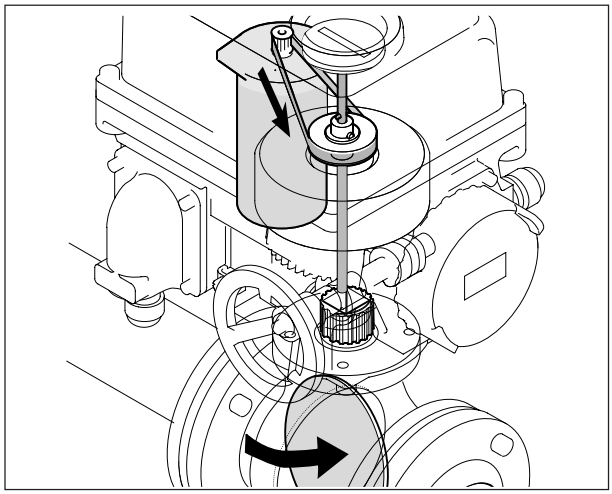

2.1.1

2.1.1

Control signal “open”: counter-clockwise rotation, valve opens.

Steuersignal ”offen”: Drehung gegen den Uhrzeigersinn, Armatur öffnet.

Stuursignaal “open”: rotatie tegen de wijzers van de klok in, afsluiter gaat open.

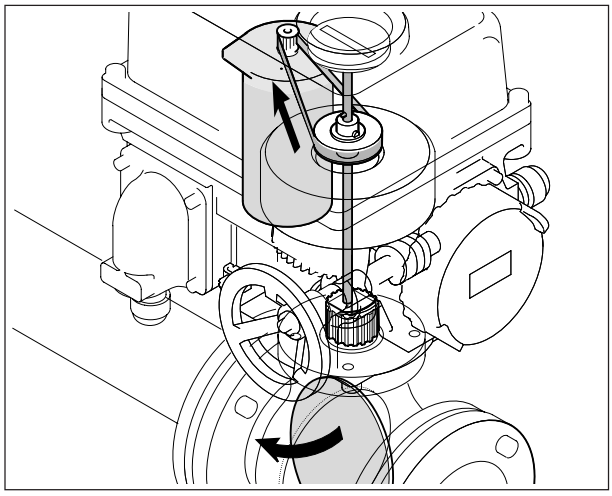

2.1.2

2.1.2

Control signal “closed”: clockwise rotation, valve closes.

Steuersignal ”geschlossen”: Drehung im Uhrzeigersinn, Armatur schließt.

Stuursignaal “dicht”: rotatie met de wijzers van de klok mee, afsluiter gaat dicht.

2.2 Manual override / Handbetrieb / *Handbediening*

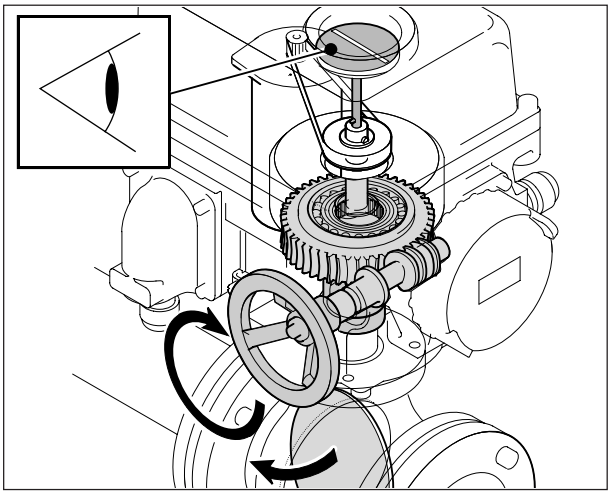

2.2.1

2.2.1

To operate the manual override during power failure or setting use the handwheel. You do not need to engage or disengage the manual override before manual operation.
The handwheel does not rotate during power operation.
Turn the handwheel clockwise to close the valve. Turn the handwheel counter-clockwise to open the valve.

Zur Betätigung von Hand bei einem Stromausfall oder zur Justage benutzen Sie das Handrad. Vor dem Wechsel auf Handbetrieb brauchen Sie das Handrad nicht zu aktivieren bzw. ein- oder auszukuppeln.
Das Handrad läßt sich während des Betriebs mit Strom nicht drehen. Zum Schließen der Armatur drehen Sie das Handrad im Uhrzeigersinn. Zum Öffnen der Armatur drehen Sie das Handrad gegen den Uhrzeigersinn.

Gebruik het handwiel voor handbediening bij stroomstoring of instelwerkzaamheden. U hoeft de handbediening niet in of uit te koppelen, alvorens over te schakelen op handbediening.
Het handwiel draait niet mee als de aandrijving elektrisch bediend wordt.
Draai het handwiel met de wijzers van de klok mee om de afsluiter te sluiten. Draai het handwiel tegen de wijzers van de klok in om de afsluiter te openen.

2.3 Operation times / Betriebszeiten / *Looptijden*

	English	Deutsch	Nederlands
B	Break torque	Loßreißmoment	Losbreekmoment
R	Run torque	Laufdrehmoment	Loopmoment
S	Seating torque	Schließmoment	Aanzetmoment zitting

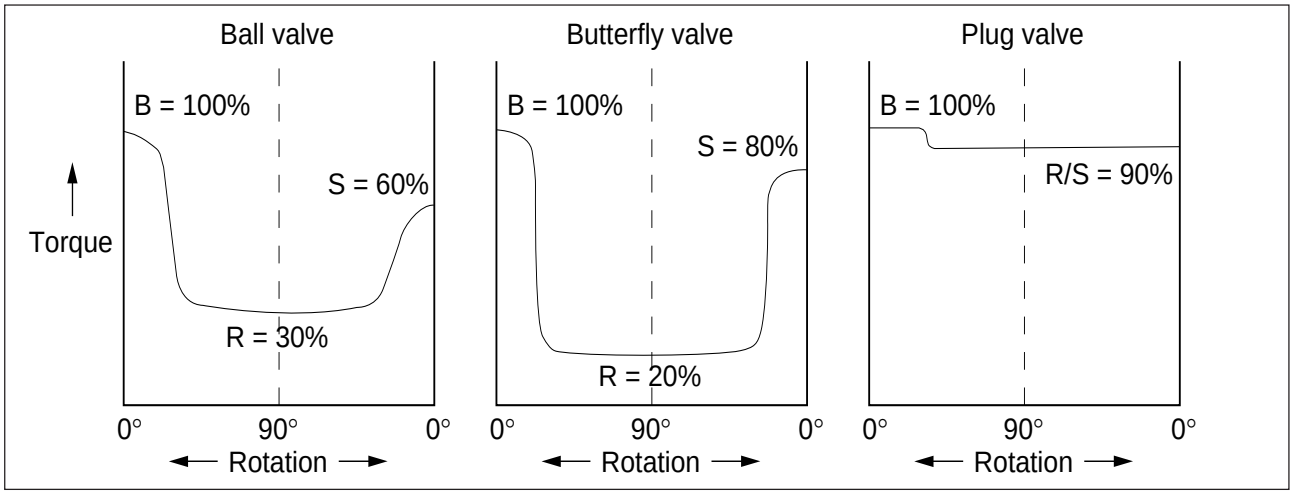

2.3.1

Operating time (in sec.)		
	No load	Max. load
ELQ 100	6	10
ELQ 200	8	14
ELQ 300	13	18
ELQ 500	17	22
ELQ 800	28	36

Operating time	- Betriebszeit	- Looptijd
(in sec.)	- (in Sek.)	- (in sec.)
No load	- unbelastet	- geen belasting
Max. load	- Höchstbelastung	- max. belasting

2.3.1

Operation times are nominal. The actual operation time will vary depending on the torque characteristic of the valve. For other operating times see speed control option.

Bei den Betriebszeiten handelt es sich um Nennwerte. Die wirkliche Betriebszeit hängt von der Drehmomentkurve der Armatur ab. Weitere Betriebszeiten finden sich beim Zubehör für die Geschwindigkeitsregelung.

Looptijden zijn nominaal. De werkelijke looptijd zal afhankelijk van de momentkarakteristiek van de afsluiter variëren. Zie voor andere looptijden de optionele snelheidsregeling.

2.4 Electronic control unit / Elektronische Steuereinheit / *Elektronische besturingseenheid*

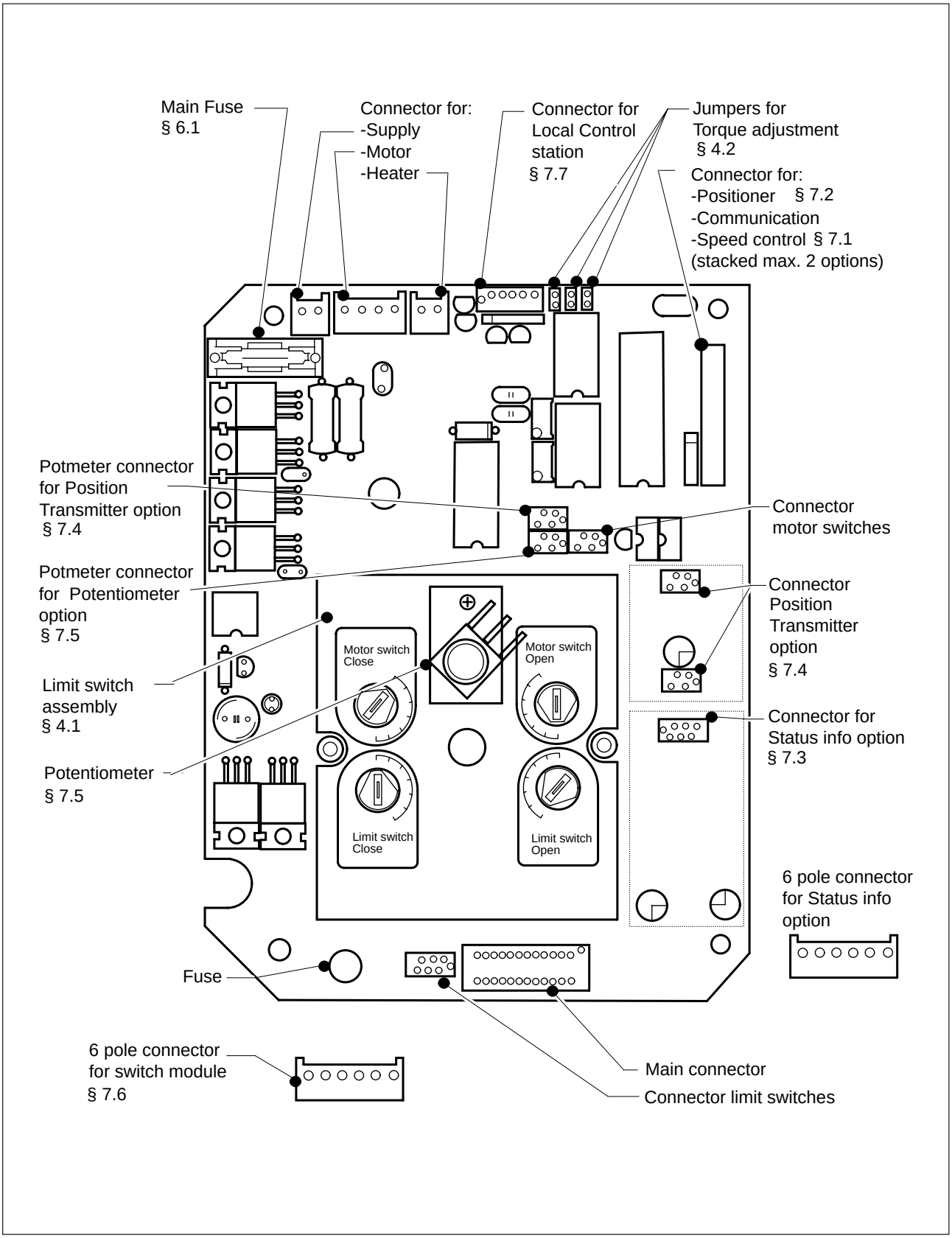

2.4.1 Layout of basic print / Anordnung der Basis-Leiterplatte / *Layout van basisprintplaat*

Warning
The electronic parts of the ELQ-actuator or the options can be damaged by a discharge of static electricity. Before you start touch a grounded metal surface to become static free.

Achtung
Die elektronischen Teile des ELQ-Antriebs oder des Zubehörs können durch Entladung von statischer Elektrizität beschädigt werden. Berühren Sie daher vor Beginn der Arbeiten eine geerdete Metallfläche, so daß Sie frei von statischer Elektrizität sind.

Waarschuwing
De elektronische onderdelen van de ELQ-aandrijving of de optionele onderdelen kunnen worden beschadigd door een ontlading van statische elektriciteit. Raak, voordat u begint, een geaard metalen vlak aan om statisch vrij te zijn.

3 MOUNTING THE ELQ UNIT ON A VALVE / MONTAGE DER ELQ-EINHEIT AUF EINE ARMATUR / *ELQ-AANDRIJVING OP EEN AFSLUITER MONTEREN*

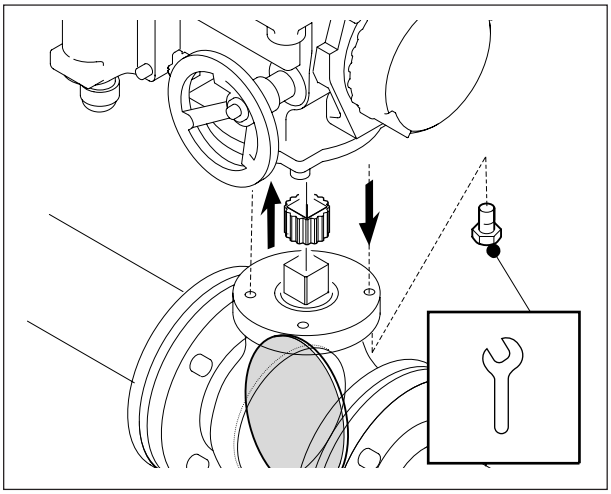

3.0.1

Remove handle nut, handle, lockwasher, etc. from valve if required. Check position of valve.

There are two possibilities for mounting the ELQ unit:

- Direct mounting.
- Bracket mounting.

3.0.1

Direct mounting

Place insert in bottom flange of actuator.

Entfernen Sie gegebenenfalls die Handbetätigung von der Armatur. Kontrollieren Sie die Position der Armatur.

Die ELQ-Einheit kann auf zwei verschiedene Weisen aufgebaut werden:

- direkter Aufbau
- Aufbau mit Montagesatz

3.0.1

Direkter Aufbau

Stecken Sie den Kupplungseinsatz in die Antriebswelle.

Verwijder indien nodig hendelmoer, hendel, veerring etc. van de afsluiter. Controleer de positie van de afsluiter.

Er zijn twee mogelijkheden voor het monteren van de ELQ-aandrijving:

- *Direct monteren.*
- *Monteren met opbouwset.*

3.0.1

Direct monteren

Plaats insert in onderflens van aandrijving.

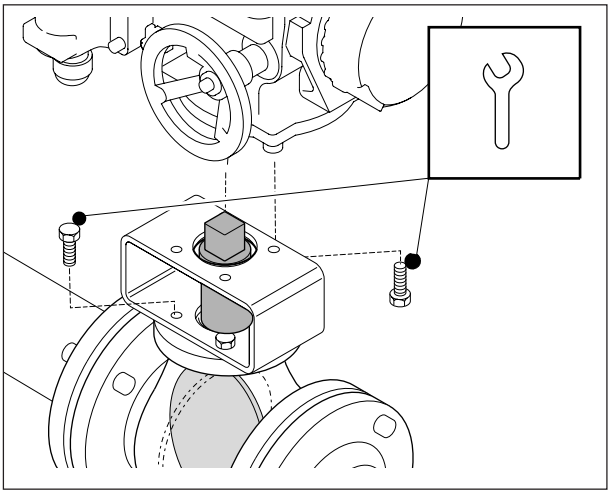

3.0.2

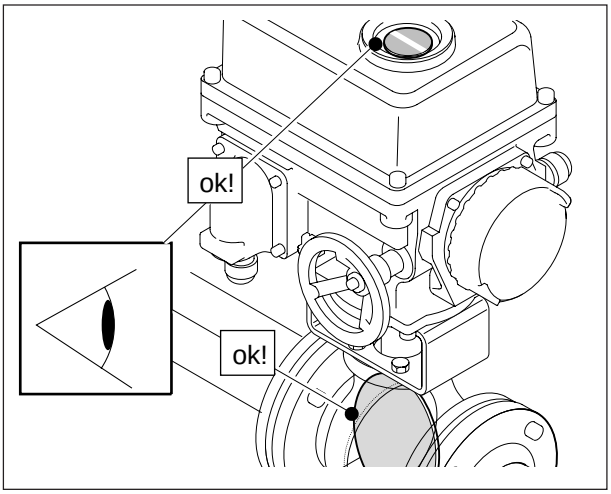

3.0.3

3.0.2

Bracket mounting

Mount bracket and adaptor on valve.
Place insert in bottom flange at actuator.

3.0.3

Valves are manufactured so that they operate in only one 90 degree segment. The actuator should be mounted for counterclock-wise rotation to open and clockwise to close the valve.

Aufbau mit Montagesatz

Setzen Sie die Konsole und die Kupplung auf die Armatur. Stecken Sie den Kupplungseinsatz in die Antriebswelle.

3.0.3

Die Armaturen sind so konstruiert, daß sie nur innerhalb eines 90°-Winkels wirksam sind. Der Antrieb sollte so montiert werden, daß eine Drehung gegen den Uhrzeigersinn die Armatur öffnet und daß eine Drehung im Uhrzeigersinn die Armatur schließt.

Monteren met opbouwset

Monteer beugel en koppelstuk op afsluiter.
Plaats insert in onderflens van afsluiter.

3.0.3

Afsluiters zijn zodanig geconstrueerd dat deze alleen in een segment van 90 graden werken. Bevestig de aandrijving zo dat bij rotatie tegen de wijzers van de klok in de afsluiter wordt geopend en bij rotatie met de wijzers van de klok mee de afsluiter wordt gesloten.

4 STROKE ADJUSTMENT / EINSTELLEN DES DREHWINKELS / *SLAGINSTELLING*

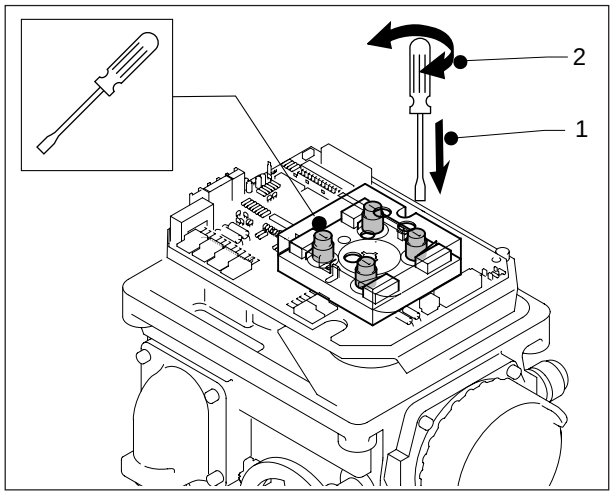

4.0.1

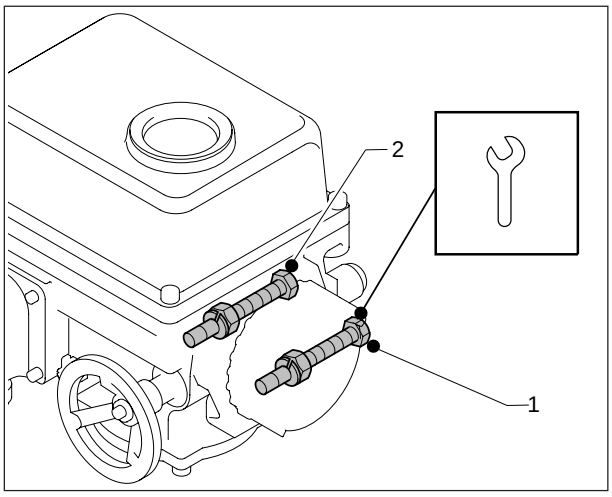

4.0.2

The ELQ-series actuators have two ways of limiting the stroke:

Die Drehwinkeleinstellung der ELQ-Antriebe können auf zwei verschiedene Weisen realisiert werden.

De aandrijvingen van de ELQ-serie hebben twee manieren van slagbegrenzing:

4.0.1

Electrically limiting the stroke by motor limit switch setting.

Elektrische Begrenzung des Drehwinkels durch die Motorendschalter.

Elektronische slagbegrenzing door instelling van motoreindschakelaar.

4.0.2

Mechanically limiting the stroke by limit stop screws (when the actuator is under manual operation).

1. open
2. closed

Mechanische Begrenzung des Drehwinkels durch Anschlagschrauben (diese Justierung ist nur im Handbetrieb möglich).

1. **offen**
2. **geschlossen**

Mechanische slagbegrenzing door eindaanslag-bouten (als de aandrijving handmatig wordt bediend).

1. *open*
2. *dicht*

4.1 Setting of switches and mechanical limit stops / Einstellen der Schalter und der mechanischen Endstops / *Schakelaars en mechanische eindaanslagen instellen*

The nominal rotation of the ELQ-actuator is factory set. If desired adjust the motor and limit switches and the mechanical limit stops after installing the ELQ-actuator on the valve.
(For connecting limit switch signals for position indication, see § 5.2)

Die Nenndrehung des ELQ-Antriebs wurde im Werk eingestellt. Gegebenenfalls lassen sich die Motor- und Grenzschalter und die mechanischen Begrenzungen nach dem Einbau des ELQ-Antriebs auf der Armatur ändern. (Hinweise zum Anschließen der Grenzschaltersignale für die Positionsanzeige finden Sie in Abschnitt 5.2.)

De nominale rotatie van de ELQ-aandrijving is in de fabriek afgesteld. Naar wens kunt u de motor- en eindschakelaars en de mechanische eindaanslagen afstellen, nadat u de ELQ-aandrijving op de afsluiter hebt gemonteerd. (Voor het aansluiten van eindschakelaarsignalen voor positie-aanduiding, zie § 5.2)

Factory settings nominal rotation		
Motor and limit switches	90°	+ 1° at each end
Mechanical limit stops	90°	+ 5° at each end

Factory settings nominal rotation	- Werkseinstellungen für Nenndrehung	- Fabrieksafstellingen nominale rotatie
Motor and limit switches	- Motor- und Grenzschalter	- Motor- en eindschakelaars
Mechanical limit stops	- mechanische Anschläge	- Mechanische eindaanslagen
+ 1° at each end	- + 1° in jeder Endlage	- + 1° op elk einde
+ 5° at each end	- + 5° in jeder Endlage	- + 5° op elk einde

Warning
During operation the sequence of reaching the various switches/stops at the end of stroke is;
1e Limit switches
2e Motor switches
3e Limit stops

Achtung
Während des Betriebs erreichen die verschiedenen Schalter bzw. Anschläge in folgender Reihenfolge das Ende ihres Hubs:
1. **Endlagenschalter**
2. **Motorschalter**
3. **Endstops**

Waarschuwing
Tijdens bedrijf is de volgorde van het bereiken van de verschillende schakelaars/aanslagen aan het einde van de slag als volgt;
1e eindschakelaars
2e motorschakelaars
3e mechanische eindaanslagen

Procedure:
1. Mount the actuator onto a valve.

Open:
2. Move the valve away from the fully open position with the manual override hand wheel.
3. Turn the “open” mechanical stop screw out (CCW) 4 turns.
4. Move the valve to the fully open position with the manual override hand wheel.
5. Turn “motor switch open”-cam (CW) until switch trips.

For position indication set the limit switches as follows:
Turn “Limit switch open”-cam (CW) until switch trips.

6. Turn the “open” mechanical stop screw in (CW) until an obstruction is felt (do not force) then back-off 3 turns and lock the mechanical stop screw with the locknut.

Vorgehensweise:
1. Bauen Sie den Antrieb auf eine Armatur.

Offen:
2. Drehen Sie die Armatur mit der Handradbetätigung des Antrieb aus die Position “AUF”.
3. Drehen Sie die mechanische Anschlagschraube “offen” 4 Umdrehungen (gegen den Uhrzeigersinn) heraus.
4. Drehen Sie die Armatur mit der Handradbetätigung des Antriebs in die Position “AUF”.
5. Drehen Sie den Schaltnocken “Motorschalter offen” (im Uhrzeigersinn), bis der Kontakt unterbricht.

Für die Endlageanzeige stellen Sie die Endlagenschalter folgendermaßen ein:
Drehen Sie den Schaltnocken “Endlagenschalter offen” (im Uhrzeigersinn), bis der Kontakt unterbricht.

6. Drehen Sie die mechanische Anschlagschraube “offen” (im Uhrzeigersinn) hinein, bis Sie einen Widerstand spüren (nicht forcieren), drehen Sie sie dann 3 Umdrehungen zurück und kontern Sie dann die Anschlagschraube mit der Kontermutter.

Handelwijze:
1. Monteer de aandrijving op de afsluiter.

Open:
2. Draai de afsluiter weg van de volledig geopende positie met handwiel van de handbediening.
3. Draai de “open” mechanische eindaanslagbout (CCW) 4 omwentelingen naar buiten.
4. Draai de afsluiter naar de volledig geopende positie met het handwiel van de handbediening.
5. Draai “motor schakelaar open”-nok (CW) totdat de schakelaar wordt geactiveerd.

Stel voor de positie-aanduiding de eindschakelaars als volgt in:
Draai “eindschakelaar open”-nok (CW) totdat de schakelaar wordt geactiveerd.

6. Draai de “open” mechanische eindaanslagbout naar binnen (CW), totdat u een blokkering voelt (oefen geen kracht uit), draai deze vervolgens drie omwentelingen terug en zet de mechanische eindaanslagschroef met de borgmoer vast.

Closed:

7. Move the valve to about 15° before the fully “closed” position with the manual override hand wheel.
8. Turn the “closed” mechanical stop screw out (CCW) 4 turns.
9. Move the valve to the fully closed position with the manual override hand wheel.
10. Turn “Motor switch closed”-cam (CCW) until switch trips.
    For position indication set the limit switches as follows:
    Turn “Motor switch closed”-cam (CCW) until switch trips.
11. Turn the “Closed” mechanical stop screw in (CW) until an obstruction is felt (do not force) then back-off 3 turns and lock the mechanical stop screw with the locknut.

Geschlossen:

7. Drehen Sie die Armatur mit der Handradbetätigung des Antriebs bis etwa 15° vor die Position “ZU”.
8. Drehen Sie die mechanische Anschlagschraube “Geschlossen” 4 Umdrehungen (gegen den Uhrzeigersinn) heraus.
9. Drehen Sie die Armatur mit der Handradbetätigung des Antriebs in die Position “ZU”.
10. Drehen Sie die Schaltnocken “Motorschalter geschlossen” (gegen den Uhrzeigersinn), bis der Kontakt unterbricht.
    Für die Endlageanzeige stellen Sie die Endlagenschalter folgendermaßen ein:
    Drehen Sie den Schaltnocken “Endlagenschalter geschlossen” (gegen den Uhrzeigersinn), bis der Kontakt unterbricht.
11. Drehen Sie die mechanische Anschlagschraube “Geschlossen” (im Uhrzeigersinn) hinein, bis Sie einen Widerstand spüren (nicht forcieren), drehen Sie sie dann 3 Umdrehungen zurück und kontern Sie dann die mechanische Anschlagschraube mit der Kontermutter.

Dicht:

7. *Draai de afsluiter naar ongeveer 15° voor de volledig “gesloten” positie met het handwiel van de handbediening.*
8. *Draai de “gesloten” mechanische eindaanslagbout (CCW) 4 omwentelingen naar buiten.*
9. *Draai de afsluiter naar de volledig gesloten positie met het handwiel van de handbediening.*
10. *Draai de “motorschakelaar gesloten”-nok (CCW), totdat de schakelaar wordt geactiveerd.*
    Stel voor de positie-aanduiding de eindschakelaars als volgt in:
    Draai “motorschakelaar gesloten”-nok (CCW), totdat de schakelaar wordt geactiveerd.
11. *Draai de “gesloten” mechanische eindaanslagbout naar binnen (CW) totdat u een blokkering voelt (oefen geen kracht uit), draai deze vervolgens drie omwentelingen terug en zet de mechanische eindaanslagschroef met de borgmoer vast.*

4.2 Torque setting / Einstellen des Drehmoments / *Moment instellen*

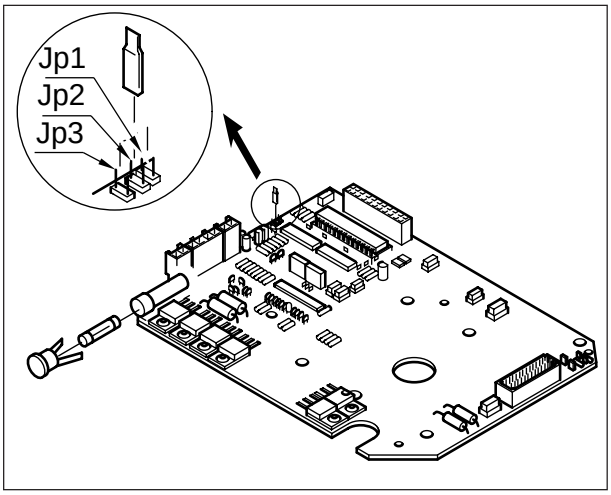

4.2.1

4.2.1

Warning
Be sure that the jumper is placed at one of the three jumper positions.

The ELQ is factory set at its maximum output torque. The output torque can be reduced by means of a jumper (see table 4.2.2).

Achtung
Überzeugen Sie sich davon, daß sich der Jumper sich in einem der drei Jumpersteckplätze befindet.

Der ELQ wurde im Werk auf den Höchstwert für das Ausgangsdrehmoment eingestellt. Das Ausgangsdrehmoment kann durch umstecken eines Jumpers verringert werden (siehe Tabelle 4.2.2).

Waarschuwing
Zorg ervoor dat de jumper op een van de drie jumperposities is geplaatst.

De ELQ is in de fabriek al afgesteld op het maximale uitgangsmoment.
Dit uitgangsmoment kan gereduceerd worden door middel van een jumper
(zie tabel 4.2.2).

Jumper setting maximum torque			
Actuator	Jp1 (Nm)	Jp2 (Nm)	Jp3 Nm)
ELQ 100	100	80	55
ELQ 200	200	160	130
ELQ 300	300	250	210
ELQ 500	500	430	360
ELQ 800	800	700	600

Jumper setting maximum torque	- Jumper-Einstellung für Drehmoment-Höchstwert	- Jumper-instelling maximaal moment
Actuator	- Antrieb	- Aandrijving

5 CONNECTING CONTROL SIGNALS / ANSCHLIESSEN DER STEUERSIGNALE / *STUURSIGNALEN AANSLUITEN*

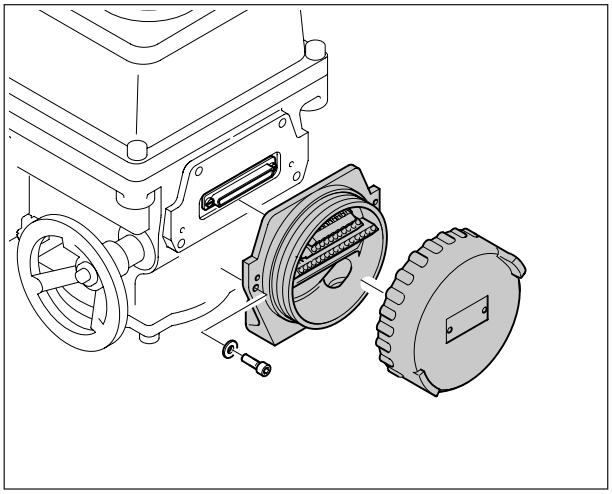

5.0.1

5.0.1

Note
Before connecting the power supply connect all options properly (see option instructions).

Warning
Terminal compartment must be electronically isolated before any disassembly is begun.

The ELQ-actuator has a terminal compartment with a plug connector for control signals.

All control signals can be connected to the terminals inside this compartment. In case of maintenance or replacement of the valve/actuator unit, the terminal compartment can be unplugged from the ELQ-actuator and plugged into an other actuator. You do not need to reconnect all the control wiring.

Hinweis
Vor dem Anschließen der Netzspannung muß das Zubehör richtig angeschlossen sein (siehe die Anweisungen für das Zubehör).

Achtung
Vor dem Auseinanderbau muß das Anschlußgehäuse elektronisch getrennt werden.

Der ELQ-Antrieb hat ein Anschlußgehäuse mit einem Anschlußstecker für Steuersignale. Alle Steuersignale können an die Klemmleisten in diesem Gehäuse angeschlossen werden. Bei Wartungsarbeiten oder beim Auswechseln der Armatur/Antriebs-Einheit, kann das Anschlußgehäuse vom ELQ-Antrieb abgezogen und mittels eines vorhandenen Stecker an einen anderen Antrieb angebracht werden. Dadurch entfällt ein erneutes Anschließen der Steuerkabel.

Opmerking
Sluit alle optionele onderdelen correct aan, alvorens de voedingsspanning aan te sluiten (zie aanwijzingen optionele onderdelen).

Waarschuwing
Klemmenbehuizing moet elektronisch geïsoleerd worden, alvorens met demonteren te beginnen.

De ELQ-aandrijving heeft een klemmenbehuizing met een stekerverbinding voor stuursignalen. Alle stuursignalen kunnen op de aansluitpunten in deze behuizing worden aangesloten. Bij onderhoud of vervanging van de afsluiter-/aandrijvingseenheid, kan deze behuizing van de ELQ-aandrijving worden losgekoppeld en aan een andere aandrijving worden gekoppeld. U hoeft dan niet de hele besturingsbedrading opnieuw aan te sluiten.

5.1 Connecting “Open” and “Close” control signals / Anschließen der Steuersignale “Öffnen” und “Schließen” / *“Open” en “dicht” stuursignalen aansluiten*

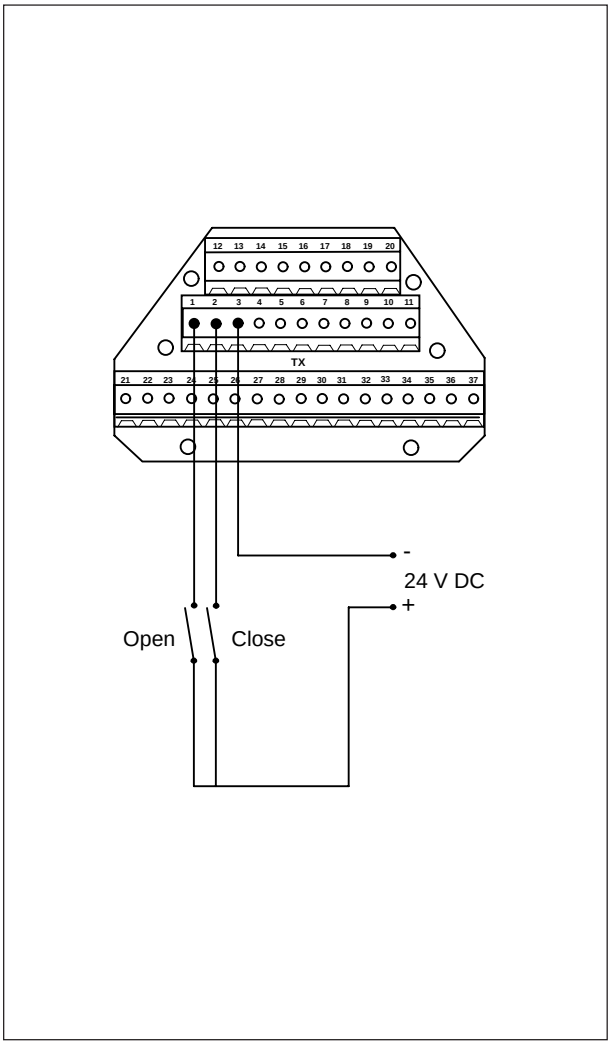

5.1.1

5.1.1

A 24 V DC signal at 1 and 3 opens the actuator.
A signal at 2 and 3 closes the actuator.
No signal (or a signal at both), the actuator stops.

Ein 24-V-Gleichstromsignal an 1 und 3 öffnet den Antrieb. Ein Signal an 2 und 3 schließt den Antrieb.
Wenn kein Signal (oder an beiden Punkten ein Signal) anliegt, stoppt der Antrieb.

Door een 24 V DC signaal op terminal 1 en 3 gaat de aandrijving open. Door een signaal op terminal 2 en 3 gaat de aandrijving dicht.
Geen signaal (of een signaal op beide), de aandrijving stopt.

5.2 Limit switches for position indicating / Endlagenschalter zur Endlagenanzeige / *Eindschakelaars voor positie-aanduiding*

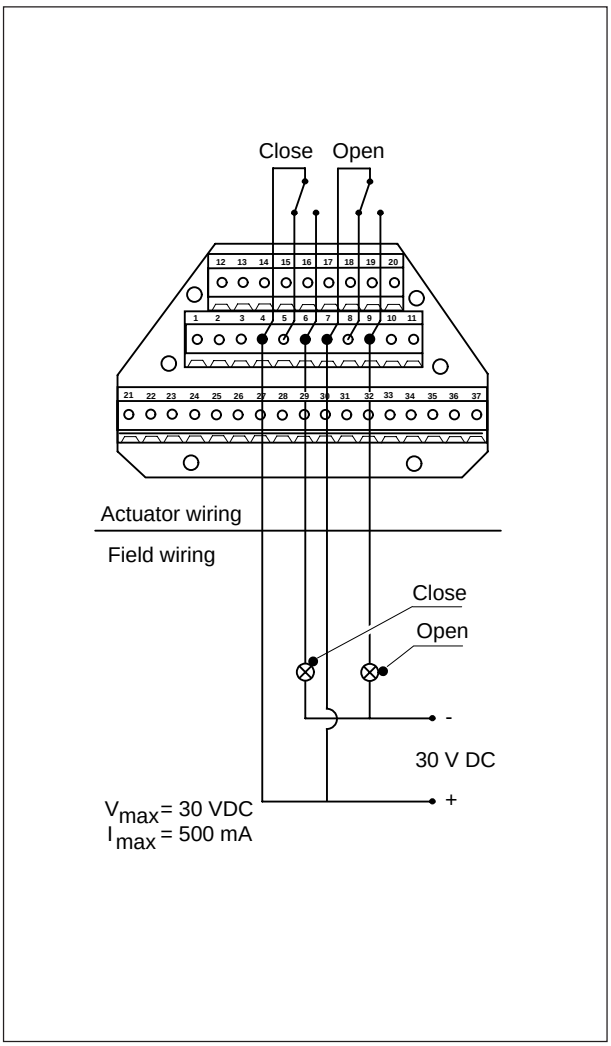

5.2.1

5.2.1

Connect 30 V max. to the switches for external use, (see specifications). For limit switch setting see § 4.1.

Before making the connections, first decide on the type of indication required:

Position indication 5.2.1

- closed
- open

Switches are shown in mid-stroke.

Für Zusatzgeräte können Sie bis zu 30 V an diese Schalter anschließen (siehe die technischen Daten).
Hinweise zum Einstellen der Endlagenschalter finden Sie in Abschnitt 4.1.

Bevor Sie die Endanlagenschalter anschließen , müssen Sie zunächst feststellen, welche Art von Anzeige benötigt wird:

Endlagenanzeige 5.2.1

- **geschlossen**
- **offen**

Die Abbildung zeigt die Schalter in der Mittelstellung des Drehwinkels.

Sluit 30 V max. aan op de schakelaars voor extern gebruik (zie specificaties). Voor het instellen van de eindschakelaars, zie § 4.1.

Alvorens de aansluitingen te maken, dient u eerst te beslissen welk type aanduiding u wenst:

Positie-aanduiding 5.2.1

- *dicht*
- *open*

Schakelaars zijn afgebeeld in het midden van de slag.

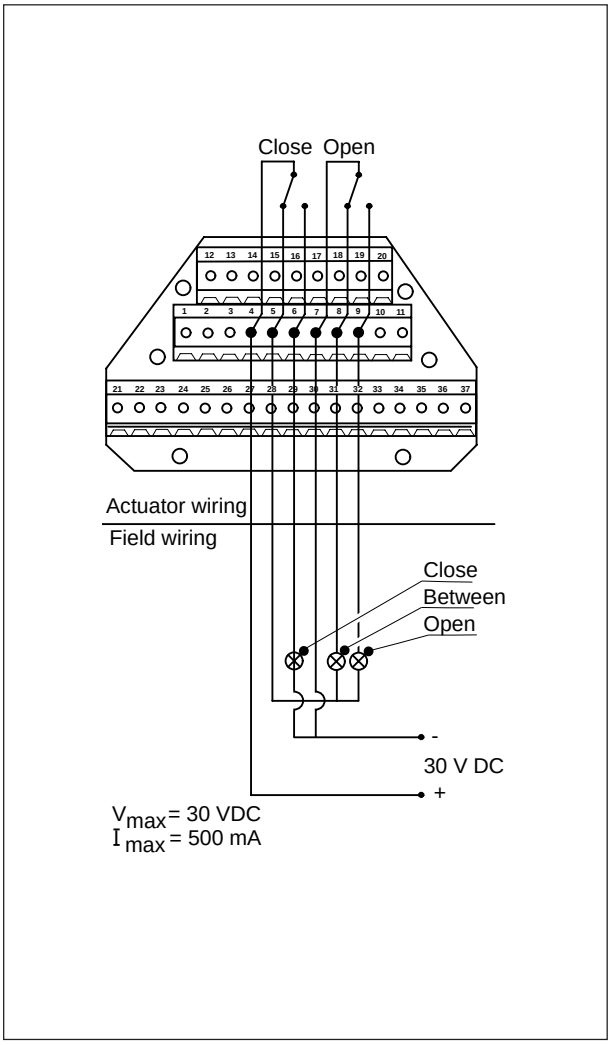

5.2.2

Position indication 5.2.2

- closed
- between open and closed
- open

Switches are shown in mid-stroke.

Endlagenanzeige 5.2.2

- geschlossen
- zwischen offen und geschlossen
- offen

Die Abbildung zeigt die Schalter in der Mittelstellung des Drehwinkels.

Positie-aanduiding 5.2.2

- *Dicht*
- *Tussen open en dicht*
- *Open*

Schakelaars zijn afgebeeld in het midden van de slag.

6 CONNECTING POWER SUPPLY / ANSCHLIESSEN DER NETZSPANNUNG / *VOEDINGSSPANNING AANSLUITEN*

Note
Before connecting the power supply connect all options properly (see option instructions).

The power print is designed so that four basic types of power can be supplied to the actuator.

Hinweis
Vor dem Anschließen der Netzspannung muß das Zubehör richtig angeschlossen sein (siehe Anleitungen für Zubehör).

Die Stromversorgungsplatine ist so ausgelegt, daß der Antrieb mit vier verschiedenen Arten von Strom versorgt werden kann.

Opmerking
Sluit alle optionele onderdelen correct aan, alvorens de voeding aan te sluiten (zie aanwijzingen optionele onderdelen).

De voedingsprintplaat is zo ontworpen dat vier basistypen voedingsspanning aan de aandrijving kunnen worden geleverd.

Power supply specification / Netzspannung / specificatie voedingsspanning						
Terminal	Voltage range / Spannung / Spanningsbereik	Max. current * / Höchstzul. strom * / max. stroom*				
		ELQ-100	ELQ-200	ELQ-300	ELQ-500	ELQ-800
0 - 1	115 VAC (+10% /-6%) 50/60 Hz	1 A	1 A	1 A	1.7 A	1.7 A
0 - 2	230 VAC (+10% /-6%) 50/60 Hz	0.5 A	0.5 A	0.5 A	0.9 A	0.9 A
0 - 3	400 VAC (+10% /-6%) 50/60 Hz	0.3 A	0.3 A	0.3 A	0.5 A	0.5 A
4 - 5	24 VDC (+10%)	4.1 A	4.3 A	4 A	5.3 A	5.1 A

* Max. current when all options mounted and under full load.

* Höchstzulässiger Strom bei Vollast und bei Verwendung der Optionsbaugruppen.

* Max. stroom als alle optionele onderdelen zijn bevestigd en bij volledige belasting.

Note
- Ground properly.
- When supplying three phase current connect a maximum of three wires, two phases and earth.

Hinweis
- Erdung einwandfrei ausführen.
- Schließen Sie beim Zuführen von Drehstrom maximal drei Drähte an: zwei Phasen und Erde.

Opmerking
- *Zorg voor correcte aarding.*
- *Sluit bij voeding van driefasenstroom maximaal drie draden aan, twee fasen en aarde.*

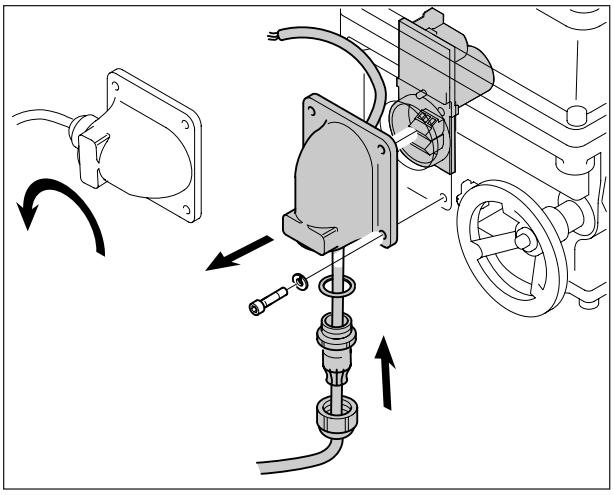

6.0.1

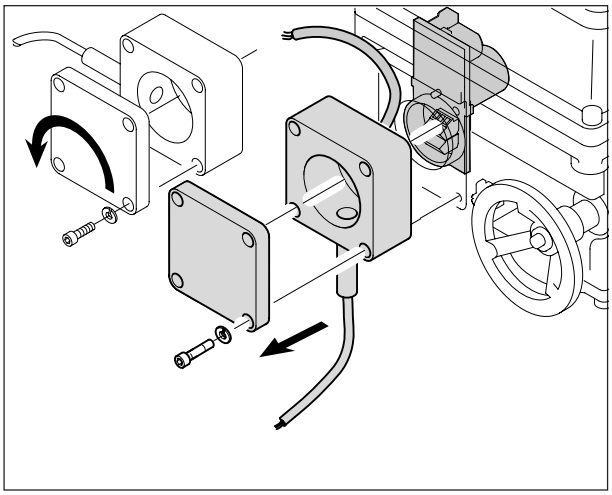

6.0.2

Connecting the power supply.

- Remove the front cover.
- Mount cable gland in the front cover.
- Insert power cable through cable gland and front cover.
- Connect power cable to power board (see fig. 6.0.3).
- Mount front cover in desired position (see fig. 6.0.1).
- Fasten cable gland.

For pipe connection see fig. 6.0.2.

Anschließen der Netzspannung:

- **Nehmen Sie den vorderen Anschlußdeckel ab.**
- **Setzen Sie eine Kabelverschraubung in den Anschlußdeckel.**
- **Führen Sie das Stromkabel durch die Kabeleinführung des Anschlußdeckels.**
- **Schließen Sie das Stromkabel an die Stromversorgungsplatine an (siehe Abb. 6.0.3).**
- **Montieren Sie den Anschlußdeckel wieder in die von Ihnen gewünschte Position. (siehe Abb. 6.0.1).**
- **Sichern Sie das Kabel mit der Kabelverschraubung.**

Hinweise für Rohranschluß finden Sie in Abb. 6.0.2.

Voedingsspanning aansluiten.

- *Verwijder het deksel.*
- *Bevestig de kabeldoorvoerplug in het deksel.*
- *Steek stroomkabel door kabeldoorvoerplug en deksel.*
- *Sluit stroomkabel op voedingskaart aan (zie afb. 6.0.3).*
- *Bevestig deksel in gewenste positie (zie afb. 6.0.1).*
- *Zet kabeldoorvoerplug vast.*

Voor buisaansluiting, zie afb. 6.0.2.

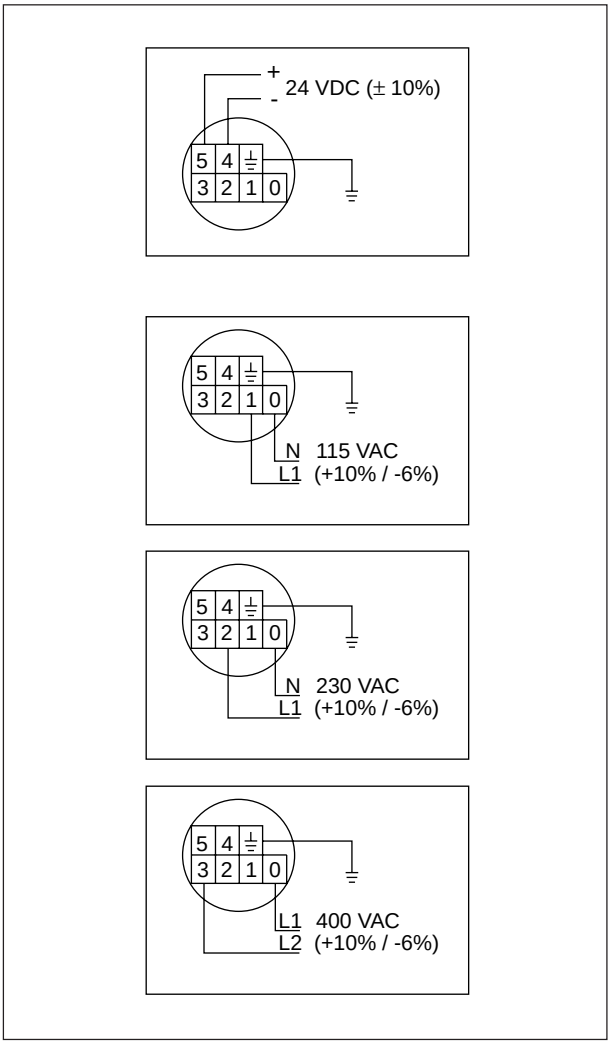

6.0.3

6.0.3

Connecting power cable to power board.

Warning
The actuator should be externally protected by a fuse.
AC: Fuse min. 2.5 Amp.
DC: Fuse min. 10 Amp.

Requirement for Factory Mutual (FM):
The 24 VDC power supply has to be protected by a power limited circuit (< 30 VDC and max. 150 W).

Anschließen des Stromkabels an die Stromversorgungsplatine.

Achtung
Der Antrieb ist mit einer Außensicherung zu versehen.
Wechselstrom: Sicherung von mindestens 2,5 A
Gleichstrom: Sicherung von mindestens 10 A

Erfordernis für Factory Mutual (FM):
Das 24 VDC-Spg.Versorgungsteil muß durch einen Energie begrenzten Stromkreis geschützt werden (< 30 VDC und Maximum 150 W).

Stroomkabel op voedingskaart aansluiten.

Waarschuwing
De aandrijving dient extern door een zekering te zijn beveiligd.
AC: Zekering min. 2.5 Amp.
DC: Zekering min. 10 Amp.

Vereiste voor Factury Mutual (FM):
De 24 VDC voedings spanning moet begrenst worden door een energie begrenzend stroomcircuit (< 30 VDC en max. 150 W).

6.1 Main fuse replacement / Auswechseln der Hauptsicherung / *Hoofdzekering vervangen*

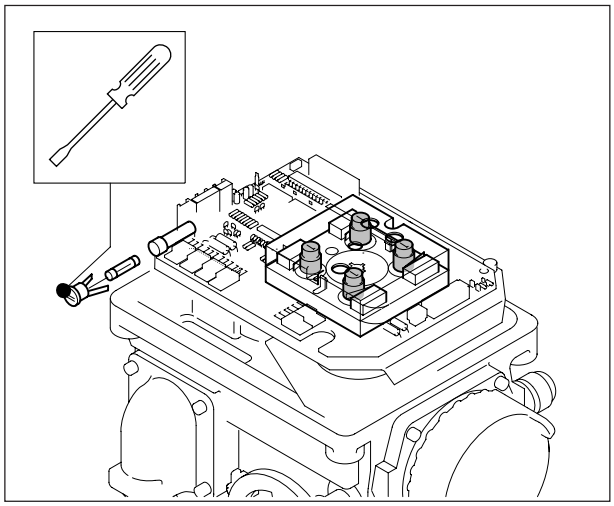

6.1.1

Internal main fuse ELQ-actuators		
Eingebaute Hauptsicherung der ELQ-Antriebe		
Interne hoofdzekering ELQ-aandrijvingen		
ELQ 100/200/300/500/800	T 10 A	ø 5 x 20 mm

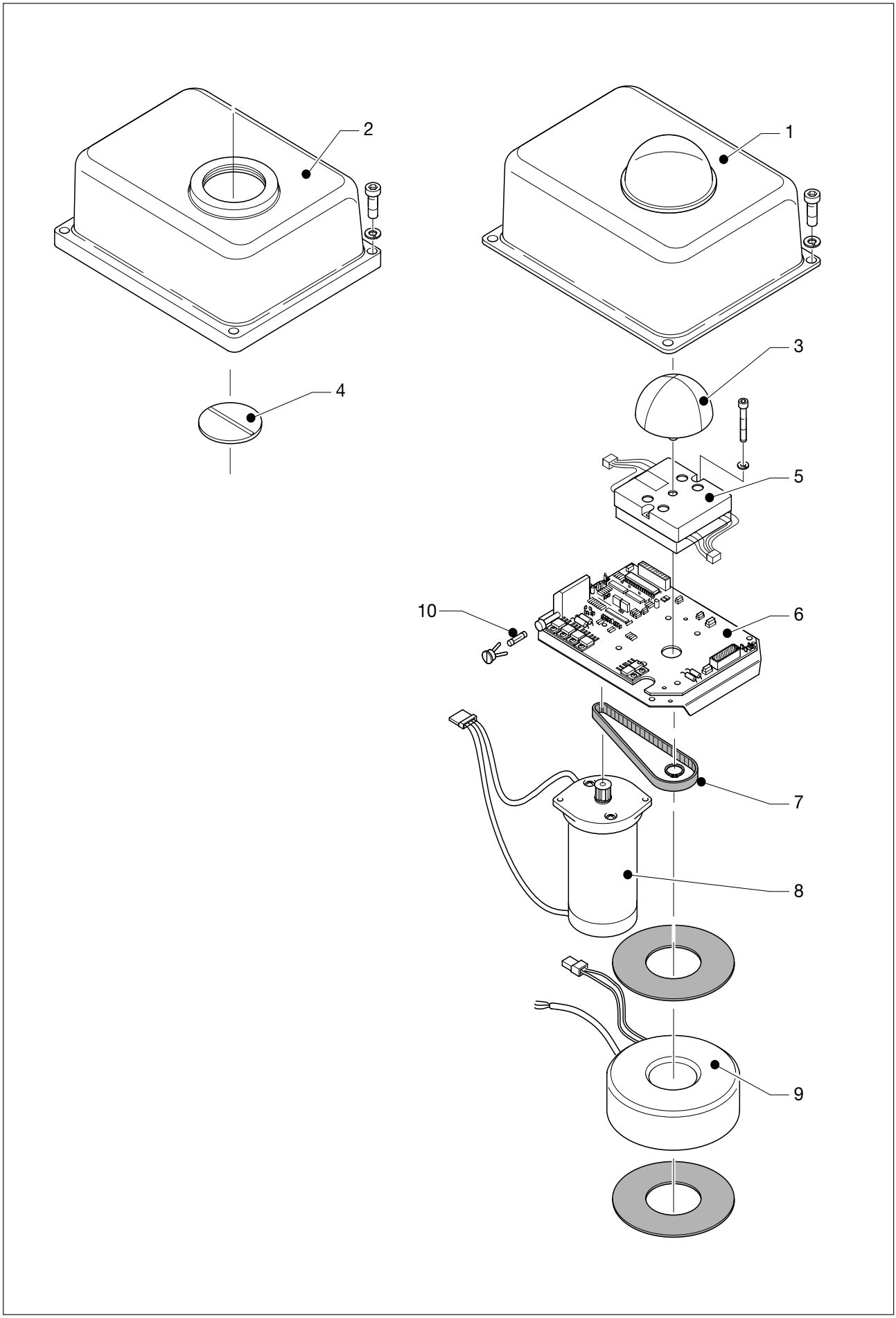
2
1
3
4
5
10
6
7
8
9

7 PARTS LIST / STÜCKLISTE / *STUKLIJSTEN*

Pos	Note Hinw. *Opm.*	Description	Umschreibung	*Beschrijving*
1	(1	Cover WP complete	Deckel WP komplett	*Deksel WP kompleet*
2	(1	Cover XP complete	Deckel XP komplett	*Deksel XP kompleet*
3		Dial WP	Sichtanzeige WP	*Standindicatie schijf WP*
4		Dial XP	Sichtanzeige XP	*Standindicatie schijf XP*
5		Limit switch assembly	Endlagenschaltermodul	*Eindschakelaarsmodule*
6	(1	Mainboard incl. bracket	Steuerplatine inkl. Konsole	*Hoofdprintplaat incl. beugel*
7	(1	Pullybelt	Antriebsriemen	*Aandrijfriem*
8	(1	Motor	Motor	*Motor*
9	(1	Transformer	Transformator	*Transformator*
10	(1 / (3	Main fuse	Hauptsicherung	*Hoofd zekering*

(1 When ordering add actuator type to description
e.i.; Motor for ELQ-100".
(2 When ordering, please indicate which electrical entry is needed
e.i.: PG13,5, M20 or 1/2" NPT.
(3 See § 6,1 for more details.

(1 Bei Ersatzteilbestellung, bitte Antriebstyp hinzufügen.
Bei Ersatzteilbestellung, bitte angeben welche Gewindegröße.
(2 Für die Kabeleinführung benötigt wird
z.B. PG 13,5, M 20 oder 1/2'' NPT.
(3 Siehe § 6,1 für weitere Angaben.

(1 Bij bestelling aandrijvingstype toevoegen aan de omschrijving
b.v.; Motor voor ELQ-100.
(2 Bij bestelling aangeven welke elektrische ingang nodig is
b.v.; PG13,5, M20 oder 1/2" NPT.
(3 Zie § 6,1 voor verdere details.

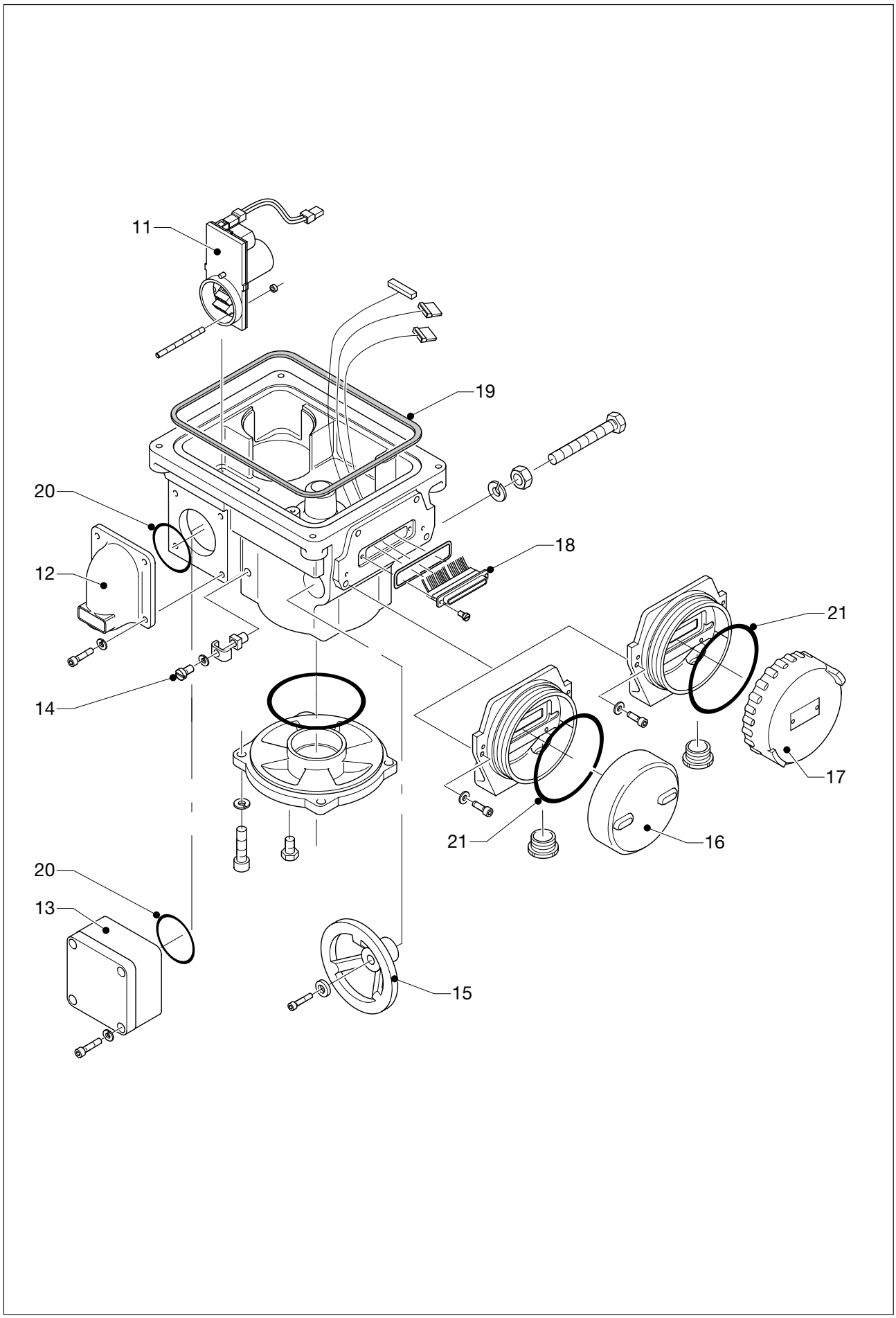
11
19
20
18
12
21
14
17
21
16
20
13
15

Pos	Note **Hinw.** ***Opm.***	Description	**Umschreibung**	***Beschrijving***
11	(1	Power supply assembly	**Stromversorgungsmodul**	*Voedingsmodule*
12	(2	Cap power supply	**Deckel Stromversorgung**	*Deksel voedingsmodule*
13	(2	Housing assembly power supply	**Gehäusemodul Stromversorgung**	*Behuizing voedingsmodule*
14		Ground lug	**Erdungssatz**	*Aardeset*
15	(1	Hand wheel	**Handrad**	*Handwiel*
16	(2	Terminal compartment WP	**Klemmenraum WP**	*Klemmenbehuizing WP*
17	(2	Terminal compartment XP	**Klemmenraum XP**	*Klemmenbehuizing XP*
18		Cable harness assembly	**Stecker inkl. Kabel**	*Draadboom*
19		Sealing topcover	**Deckeldichtung**	*Pakking deksel*
20		O-ring power supply cover	**O-Ring Deckel Stromversorgung**	*O-ring voedingsmodule deksel*
21		O-ring terminal compartment cover	**O-Ring Klemmenraum WP/XP**	*O-ring klemmenbehuizing*

(1 When ordering add actuator type to description
e.i.; Motor for ELQ-100.
(2 When ordering, please indicate which electrical entry is needed
e.i.: PG13,5, M20 or 1/2” NPT.

(1 Bei Ersatzteilbestellung, bitte Antriebstyp hinzufügen.
Bei Ersatzteilbestellung, bitte angeben welche Gewindegröße.
(2 Für die Kabeleinführung benötigt wird
z.B. PG 13,5, M 20 oder 1/2'' NPT.

(1 Bij bestelling aandrijvingstype toevoegen aan de omschrijving
b.v.; Motor voor ELQ-100.
(2 Bij bestelling aangeven welke elektrische ingang nodig is
b.v.; PG13,5, M20 oder 1/2” NPT.

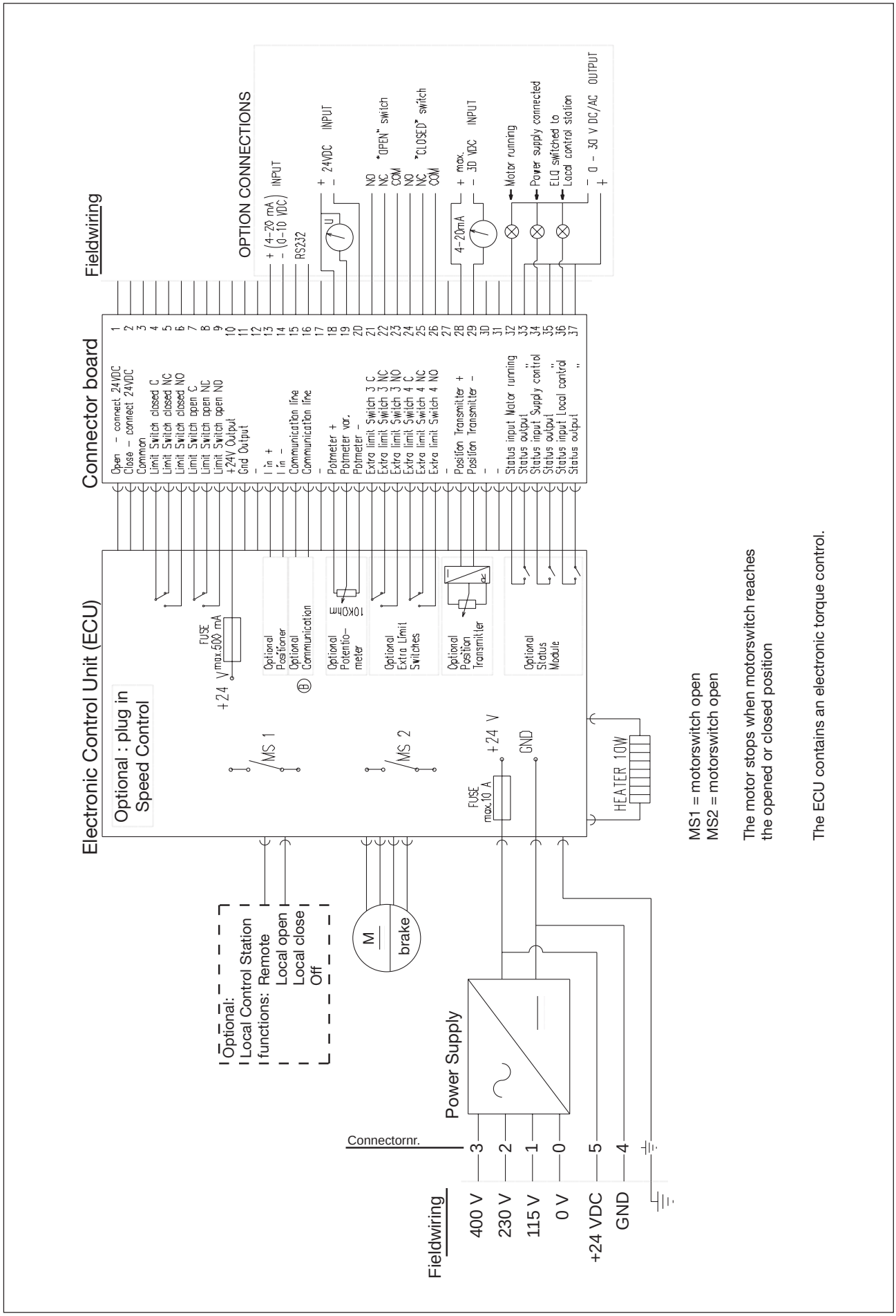
Fieldwiring
OPTION CONNECTIONS
+ (4-20 mA) - (0-10 VDC) INPUT
RS232
+ - 24VDC INPUT
NO NC COM "OPEN" switch
NO NC COM "CLOSED" switch
+ max. - 30 VDC INPUT
4-20mA
Motor running
Power supply connected
ELQ switched to Local control station
- 0 - 30 V DC/AC OUTPUT +
Connector board
Open - connect 24VDC 1
Close - connect 24VDC 2
Common 3
Limit Switch closed C 4
Limit Switch closed NC 5
Limit Switch closed NO 6
Limit Switch open C 7
Limit Switch open NC 8
Limit Switch open NO 9
+24V Output 10
Gnd Output 11
- 12
I in + 13
I in - 14
Communication line 15
Communication line 16
- 17
Potmeter + 18
Potmeter var. 19
Potmeter - 20
Extra limit Switch 3 C 21
Extra limit Switch 3 NC 22
Extra limit Switch 3 NO 23
Extra limit Switch 4 C 24
Extra limit Switch 4 NC 25
Extra limit Switch 4 NO 26
- 27
Position Transmitter + 28
Position Transmitter - 29
- 30
- 31
Status input Motor running 32
Status output 33
Status input "Supply control" 34
Status output 35
Status input "Local control" 36
Status output " 37
Electronic Control Unit (ECU)
Optional : plug in Speed Control
FUSE max.500 mA
+24 V
Optional Positioner
Optional Communication
Optional Potentio-meter
10KOhm
Optional Extra Limit Switches
Optional Position Transmitter
Optional Status Module
MS 1
MS 2
+24 V
GND
FUSE max.10 A
HEATER 10W
Optional:
Local Control Station functions: Remote
Local open
Local close
Off
M
brake
Power Supply
Connectornr.
3 2 1 0 5 4
Fieldwiring
400 V
230 V
115 V
0 V
+24 VDC
GND
MS1 = motorswitch open
MS2 = motorswitch open
The motor stops when motorswitch reaches the opened or closed position
The ECU contains an electronic torque control.

A WIRING DIAGRAM / VERDRAHTUNGSPLAN / *BEDRADINGS DIAGRAM*

Description	**Umschreibung**	***Beschrijving***
Brake	Bremse	*Rem*
C or COM = common	C oder COM = gemeinsam	*C oder COM = gemeenschappelijk*
Close	Geschlossen	*Dicht*
Connectornr.	Anschlussnummer	*Aanluitnummer*
Field wiring	Verdrahtung vom Kunden	*Bedrading voor klant*
GND	Masse	*Aarde*
Input	Input	*Input*
MS1 = motor switch open	MS1 = Motorschalter offen	*MS1 = Motorschakelaar open*
MS2 = motor switch open	MS1 = Motorschalter geschlossen	*MS1 = Motorschakelaar gesloten*
NC = Normaly Closed	NC = Normal geschlossen	*NC = Normaal gesloten*
NO = Normaly Open	NO = Normal geöffnet	*NO = Normal geopend*
Open	Offen	*Open*
Output	Output	*Output*
Power supply	Stromversorgung	Voedingsspanning
The ECU containes an electronic torque control.	Die electronische Steuereinheit enthält eine electronisch Drehmomentüberwachung	*De elektronische besturingseenheid (ECU) bevat een draaimoment kontrole*
The motor stops when motor switches reaches the opened or closed position.	Der Motor stopt wenn die Motorschalter die geöffnete oder geschlossene Stellung erreichen.	*De motor stopt als de motorschakelaars de geopende- of de gesloten stand bereiken.*
VAC	V WS	*V AC*
VDC	V GS	*V DC*
Optional	**Option**	***Optioneel***
Local Control Station Functions	Funktionen der Ortsbedienungsstation	*Functies van de lokale besturingseenheid*
Remote	Fernbedienung	*afstandsbediening*
Local open	Lokal öffnen	*Lokaal openen*
Local close	Lokal schließen	*Lokaal sluiten*
Off	Aus	*Uit*
Electronic Control Unit (ECU)	**Electronische Steuereinheit (ECU)**	***Elektronische besturingseenheid (ECU)***
Plug in Speed Control	Einsteckkarte für Geschwindigkeitsreglung	*Plug in voor snelheidsregeling*
Fuse	Sicherung	*Zekering*
Positioner	Stellungsregler	*Standsteller*
Communication	Kommunikation	*Communicatie*
Potentiometer	Potentiometer	*Potentiometer*
Extra limit switches	Extra Endlagenschalter	*Extra einschakelaars*
Position transmitter	Positionsgeber	*Positiezender*
Status module	Status Modul	*Status module*
Heater	Heizungselement	*Verwarmingselement*
Connectorboard	**Anschlußplatine**	***Aansluitprintplaat***
Connect 24VDC	Verbinde 24V GS	*Sluit 24 VDC aan*
Common	Gemeinsam	*Gemeenschappelijk*
Limit switch	Endlagenschalter	*Eindschakelaar*
Gnd Output	Erde Output	*Aarde Output*
Communication line	Kommunikationsleitung	*Communicatieleiding*
Potmeter	Potentiometer	*Potentiometer*
Status input motor running	Status input Motor läuft	*Status input Motor loopt*
Status output motor running	Status output Motor läuft	*Status output Motor loopt*
Status input supply control	Status input Stromversorgung	*Status input Voedingsspanning*
Status output supply control	Status output Stromversorgung	*Status output Voedingsspanning*
Status input Local Control	Status input Ortsbedienung	*Status input lokaal regelstation*
Status output Local Control	Status output Ortbedienung	*Status output lokaal regelstation*
Option connections	**Anschluße für Optionen**	***Aansluitpunten voor opties***
Switch	Schalter	*Schakelaar*
Motor running	Motor läuft	*Motor loopt*
Power supply connected	Stromversorgung angeschlossen	*Voedingsspanning aangesloten*
ELQ switched to Local control station	ELQ geschaltet an Ortsbedienung	*ELQ aangesloten op lokal regelstation*

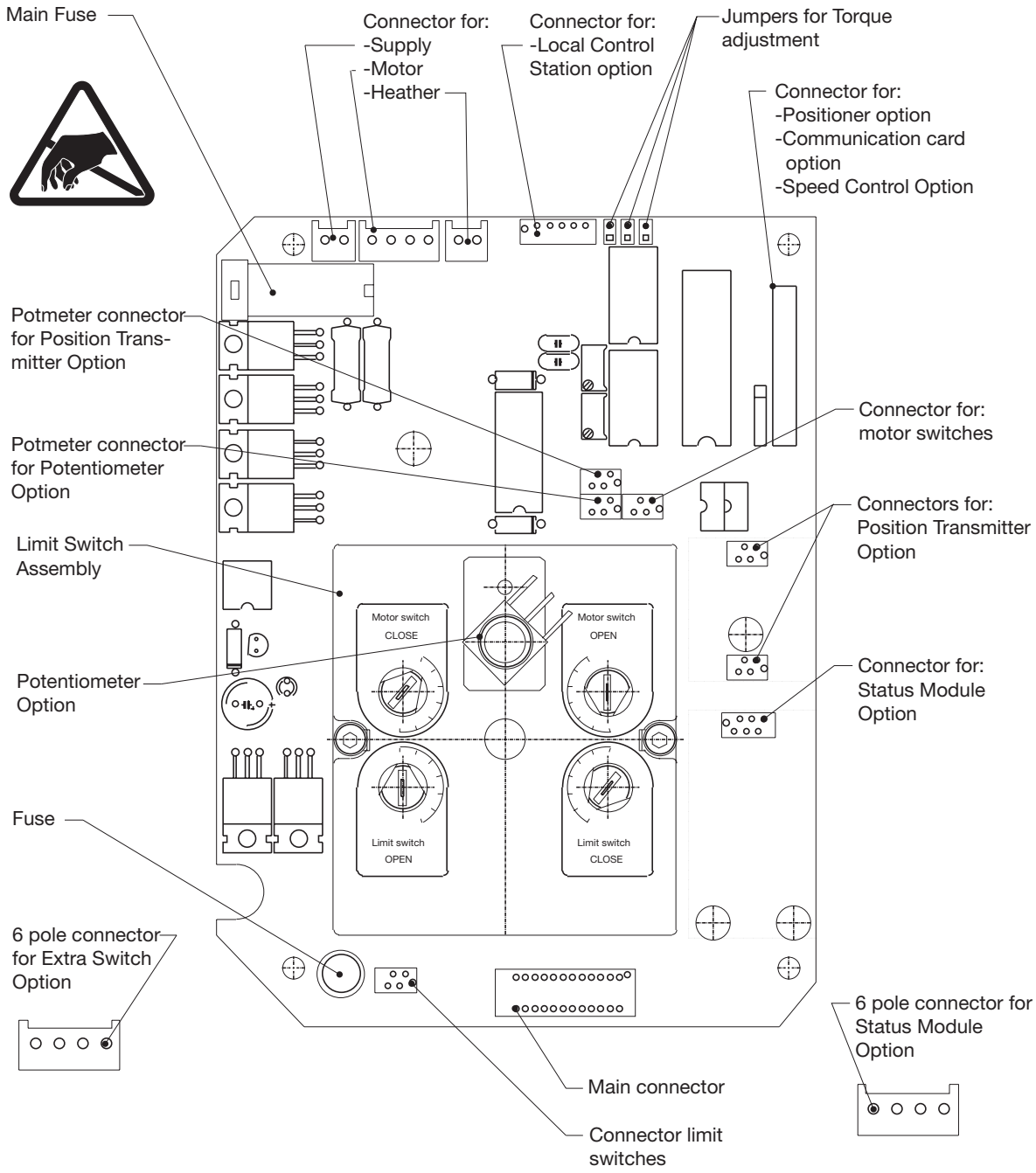
Main Fuse
Connector for:
-Supply
-Motor
-Heather
Connector for:
-Local Control
Station option
Jumpers for Torque
adjustment
Connector for:
-Positioner option
-Communication card
option
-Speed Control Option
Potmeter connector
for Position Trans-
mitter Option
Potmeter connector
for Potentiometer
Option
Connector for:
motor switches
Connectors for:
Position Transmitter
Option
Limit Switch
Assembly
Motor switch
CLOSE
Motor switch
OPEN
Potentiometer
Option
Connector for:
Status Module
Option
Fuse
Limit switch
OPEN
Limit switch
CLOSE
6 pole connector
for Extra Switch
Option
6 pole connector for
Status Module
Option
Main connector
Connector limit
switches

B LAYOUT OF ELECTRONIC CONTROL UNIT / ÜBERSICHT ÜBER DIE ELEKTRONISCHE BEDIENEINHEIT / *OVERZICHT BESTURINGSEENHEID*

Warning
The electronic parts of the ELQ-actuator or the options can be damaged by a discharge of static electricity. Before you start touch a grounded metal surface to become static free.

Achtung
Die elektronischen Teilen des ELQ-Antriebs oder des Zubehörs können durch Entladung von statischer Elektrizität beschädigt werden. Berühren Sie daher vor Beginn der Arbeiten eine geerdete Metalflaäche, so daß Sie frei von statischer Elektrizität sind.

Waarschuwing
Die elektronische onderdelen van de ELQ-aandrijving of de optionele onderdelen kunnen worden beschadigd door een ontlading van statische elektriciteit.
Raak, voordat u begint, een geaard metalen vlak aan om statisch vrij te zijn.

Description	**Umschreibung**	***Beschrijving***
Main Fuse	Hauptsicherung	Hoofdzekering
Connector for:	Anschluß für:	Aansluitpunt voor:
Supply	Stromversorgung	Voedingsspanning
Motor	Motor	Motor
Heater	Heizung	Verwarming
Local Control Station option	Ortsbedienungsstation option	Lokaal regelstation optie
Jumpers for Torque adjustment	Jumper für Drehmomenteinstellung	Jumpers voor draaimoment instelling
Positioner (option)	Stellungsregler (Option)	Standsteller
Communication card (option)	Kommunikationsplatine (Option)	Communicatieprintplaat (optie)
Speed control (option)	Geschwindigkeitsregelung (Option)	Snelheidsregeling
Potmeter connector for Position Transmitter option	Potmeteranschluß für Positionsgeber Option	Potmeter connector voor Positietransmitter optie
Potmeter connector for Potentiometer option	Potmeteranschluß für Potentiometer Option	Potmeter connector voor Potentiometer optie
Limit switch assembly	Endlagenschaltermodul	Eindschakelaarunit
Potentiometer option	Potentiometer Option	Potentiometer optie
Fuse	Sicherung	Zekering
6 pole connector for Extra Switches option	6 Poliger Stecker für Extra Endlagenschalter Option	6 polige stekker voor Extra eindschakelaars optie
Main connector	Hauptanschluß	Hoofdaansluiting
Connector limit switches	Anschluß Endlagenschalter	Aansluitpunt voor eindschakelaars
motor switches	MotorSchalter	Motorschakelaars
Position Transmitter option	Positionsgeberoption	Positietransmitter optie
Status Module option	Status Modul Option	Status module optie
6 pole connector for Status Module option	6 Poliger Stecker für Status Modul Option	6 polige stekker voor Status module optie

warren® VALVES

STAINLESS STEEL ONE PIECE BALL VALVE

800 PSI W.O.G.
THREADED ENDS

BLOW - OUT PROOF STEM
LOCKING DEVICE

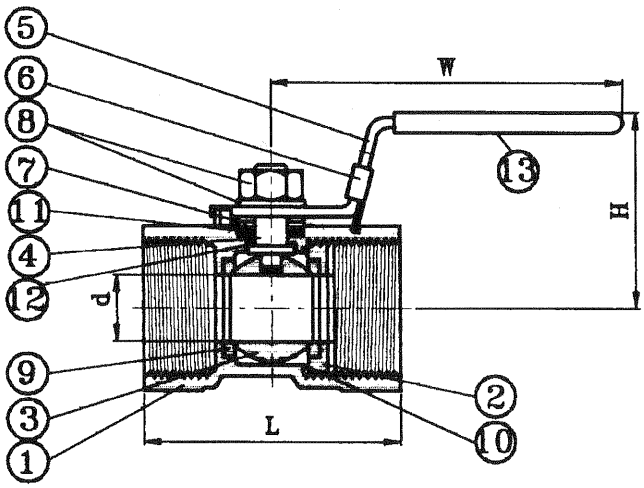

ITEM	PART NAME	MATERIAL
1	Body	ASTM A351-CF8M
2	Retainer	ASTM A351-CF8M
3	Ball	ASTM A351-CF8M
4	Stem	AISI 316
5	Handle	AISI 304
6	Locking Device	AISI 304
7	Disc	AISI 304
8	Nut & Washer	AISI 304
9	Ball Seat	RTFE
10	Body Seal	PTFE
11	Stem Packing	PTFE
12	Thrust Washer	PTFE
13	Handle Sleeve	VINYL

FIGURE NUMBER 1010

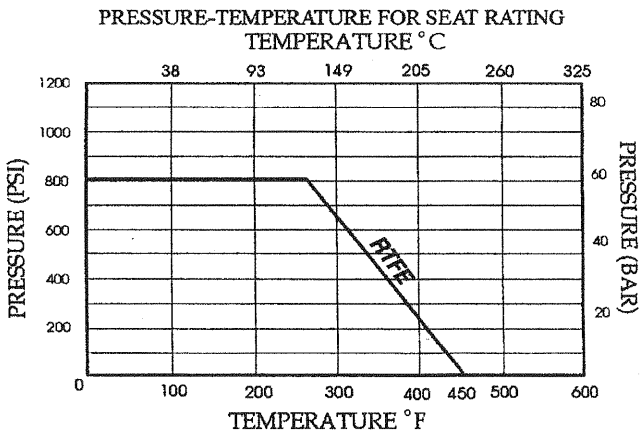

Size	L	W	H	d	CV Factor Approx.	Wt. (Lbs.) Approx.
1/4"	1.535	2.362	1.299	0.197	2.5	0.163
3/8"	1.732	2.952	1.377	0.276	4.5	0.251
1/2"	2.204	3.503	1.653	0.354	7	0.427
3/4"	2.283	3.503	1.811	0.492	9	0.599
1"	2.755	4.173	1.968	0.629	16	0.992
1-1/4"	3.031	4.173	2.204	0.787	24	1.433
1-1/2"	3.228	5.039	2.598	0.964	37	1.895
2"	3.897	5.039	2.834	1.269	68	3.174

HAYWARD®

HAYWARD® FlowControl SYSTEMS

True Union Ball Valves

1/4" to 6" - PVC, Corzan® CPVC, PPL

Rugged, Heavy Wall Plastic Construction

Stands up to the most aggressive of applications. Hayward True Union Ball Valves can take the day to day abuse of industrial service and continue to function.

True Union Design

This makes these valves very easy to maintain by allowing for easy removal from a piping system without breaking down piping connections. Just unscrew the two assembly nuts and lift the valve body out of the line.

Advanced Design Features

Hayward True Union Ball Valves are superior performers. A fine-pitch seal retainer thread allows for accurate compensation for seat wear. Reversible seats make it easy to get a damaged valve back in service. Should the seats become damaged they only need to be removed, turned over, and reinstalled to put the valve back on line. These valves feature a double o-ring stem seal for twice the leakage protection of valves with only a single stem seal.

Solid Actuator Mounting Design

For rock-solid actuator mounting, the valve incorporates a unique design that allows the actuator mounting bracket to mount directly to the valve without the need for glued or clamped-on mounting pads. This assures proper alignment of the actuator to the valve without creating any damaging side loads to cause premature stem seal failure. With this design, the valve can be easily adapted to manual operation - should the need ever arise.

Never a Problem with Corrosion

Because of the valves' all plastic construction, they will never rust or corrode - and they can survive corrosive environments without the need for painting or expensive epoxy coating.

Features

- Full Port Design
- Reversible PTFE Seats
- Easy Maintenance
- FPM or EPDM Seals
- Easily Automated
- Double O-Ring Stem Seals
- Adjustable Seat Retainer

Corzan® CPVC is a trademark of Noveon, Inc.

Options

- Stem Extensions
- Lockouts
- Spring Return Handle
- Pneumatic Actuators
- Electric Actuators
- 2"-Square Operating Nuts
- Drilled Balls For Sodium Hypochlorite Service.

Technical Information

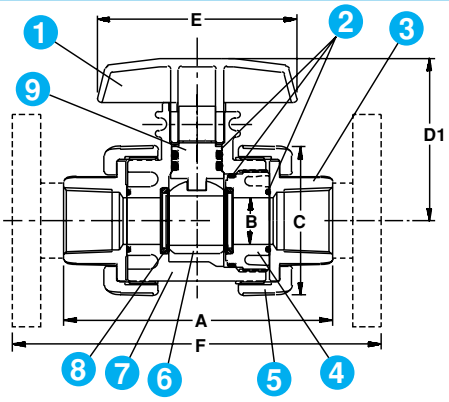

Parts List
True Union Valve

1. Handle
2. O-ring seals
3. End connector
4. Seal retainer
5. Union nut
6. Ball
7. Body
8. Teflon seat*
9. Stem
10. Actuator

* O Ring Backed Seats on 3" & 4" Sizes

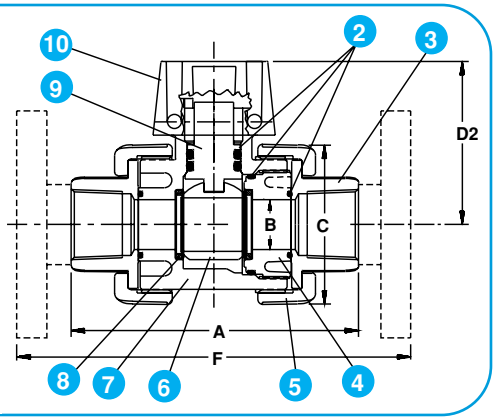

Dimensions - Inches / Millimeters

Size	A	B	C	D1	D2	F	Weight (lb / kg) Soc / Thd	Weight (lb / kg) Flanged
1/4	4.63 / 117	0.37 / 13	2.25 / 57	3.00 / 76	2.63 / 67	N/A	0.75 / 0.34	N/A
3/8	4.63 / 117	0.50 / 13	2.25 / 57	3.00 / 76	2.63 / 67	N/A	0.75 / 0.34	N/A
1/2 / 20*	4.63 / 117	0.50 / 13	2.25 / 57	3.00 / 76	2.63 / 67	6.75 / 171	0.75 / 0.34	1.00 / 0.45
3/4 / 25*	4.75 / 120	0.75 / 19	2.63 / 67	3.02 / 77	2.81 / 72	7.13 / 181	0.75 / 0.34	1.00 / 0.45
1 / 32*	5.25 / 133	1.00 / 25	3.00 / 76	3.32 / 84	3.05 / 77	8.00 / 203	1.15 / 0.52	2.15 / 0.98
1-1/4 / 40*	6.30 / 160	1.25 / 32	4.00 / 102	3.92/ 100	3.48 / 88	9.19 / 233	2.15 / 0.98	3.50 / 1.6
1-1/2 / 50*	6.75 / 171	1.50 / 38	4.00 / 102	3.92/ 100	3.48 / 88	9.88 / 249	2.15 / 0.98	3.75 / 1.7
2 / 63*	8.00 / 203	2.00 / 51	4.75 / 121	4.43/ 113	4.00 / 101	11.4 / 289	3.80 / 1.7	6.30 / 2.9
2-1/2	10.68 / 271	3.00 / 76	6.40 / 163	5.50 / 140	5.50 / 140	14.38 / 365	10.50 / 4.8	14.50 / 6.6
3 / 90*	10.56 / 268	3.00 / 76	6.40 / 163	5.50 / 140	5.50 / 140	14.44 / 367	10.50 / 4.8	14.50 / 6.6
4 / 110*	12.94 / 329	3.81 / 97	8.56 / 217	6.50 / 165	6.50 / 165	17.13 / 435	17.60 / 8.0	24.80 / 11.3
6	N/A	3.81 / 97	8.56 / 217	6.50 / 165	6.50 / 165	19.19 / 487	N/A	30.75 / 14.0

* **Metric End Connections Available in:** BSP – Straight Thread, BSP TR – Tapered Thread and Metric Socket

Selection Chart

Size	Material	End. Conn	Seals	Pressure Rating
1/4" - 3/8"	PVC	Socket or Threaded	FPM or EPDM	225 PSI @70F Non-Shock
1/2" - 4"	PVC or CPVC	Socket, Threaded or Flanged		
1/2" - 2"	PPL*	Threaded		
6"**	PVC or CPVC	Flanged		

* natural PPL - 1/2" to 1-1/2" rated at 150psi, 2" = 120psi ** 4" Valve venturied to 6"

Cv Factors

Size	Factor	Size	Factor
1/4"	1.0	1-1/2"	90
3/8"	2.8	2"	150
1/2"	8.0	2-1/2"	340
3/4"	16.0	3"	490
1"	29.0	4"	600
1-1/4"	75.0	6"	550

Operating Temperature/Pressure

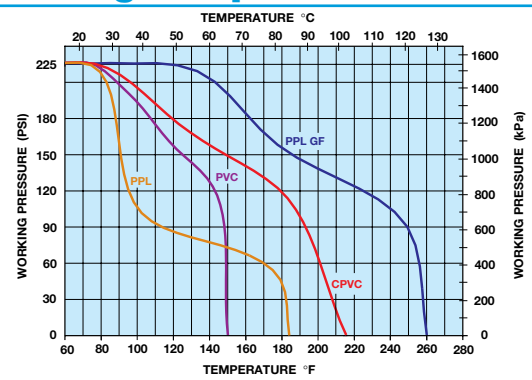

Pressure Loss Calculation Formula

$$\Delta P = \left[\frac{Q}{Cv}\right]^2$$

ΔP = Pressure Drop
Q = Flow in GPM
Cv = Flow Coefficient

HAYWARD®

FlowControl SYSTEMS

Hayward Industrial Products, Inc.
One Hayward Industrial Drive, Clemmons, NC 27012
Tel: 1-888-429-4635 (1-888-HAYINDL) • Fax: 1-888-778-8410
E-mail: hflow@haywardnet.com
Web Site: http://www.haywardindustrial.com

MC-1-TUBV Rev. 6 Printed In U.S.A.

HAYWARD INDUSTRIAL PRODUCTS
INSTALLATION OPERATION & MAINTENANCE
OF TRUE UNION BALL VALVES

PLEASE READ THE FOLLOWING INFORMATION PRIOR TO INSTALLING AND USING HAYWARD VALVES, STRAINERS, FILTERS, AND OTHER ASSOCIATED PRODUCTS. FAILURE TO FOLLOW THESE INSTRUCTIONS MAY RESULT IN SERIOUS INJURY.

1. Hayward guarantees its products against defective material and workmanship only. Hayward assumes no responsibility for damage or injuries resulting from improper installation, misapplication, or abuse of any product.
2. Hayward assumes no responsibility for damage or injury resulting from chemical incompatibility between its products and the process fluids to which they are subjected. Compatibility charts provided in Hayward literature are based on ambient temperatures of 70F and are for reference only. Customer should always test to determine application suitability.
3. Consult Hayward literature to determine operating pressure and temperature limitations before installing any Hayward product. Note that the maximum recommended fluid velocity through any Hayward product is eight feet per second. Higher flow rates can result in possible damage due to the water hammer effect. Also note that maximum operating pressure is dependent upon material selection as well as operating temperature.
4. Hayward products are designed primarily for use with non-compressible liquids. They should NEVER be used or tested with compressible fluids such as compressed air or nitrogen.
5. Systems should always be depressurized and drained prior to installing or maintaining Hayward products.
6. Temperature effect on piping systems should always be considered when the systems are initially designed. Piping systems must be designed and supported to prevent excess mechanical loading on Hayward equipment due to system misalignment, weight, shock, vibration, and the effects of thermal expansion and contraction.
7. Because PVC and CPVC plastic products become brittle below 40F, Hayward recommends caution in their installation and use below this temperature.
8. Published operating torque requirements are based upon testing of new valves using clean water at 70F. Valve torque is affected by many factors including fluid chemistry, viscosity, flow rate, and temperature. These should be considered when sizing electric or pneumatic actuators.
9. Due to differential thermal expansion rates between metal and plastic, transmittal of pipe vibration, and pipe loading forces DIRECT INSTALLATION OF METAL PIPE INTO PLASTIC CONNECTIONS IS NOT RECOMMENDED. Wherever installation of plastic valves into metal piping systems is necessary, it is recommended that at least 10 pipe diameter in length of plastic pipe be installed upstream and downstream of the plastic valve to compensate for the factors mentioned above.

SOCKET CONNECTION:

Socket end connections are manufactured to ASTM D2467-94. Solvent cementing of socket end connections to pipe should be performed per ASTM specifications D2855-87. Cut pipe square. Chamfer and deburr pipe. Surfaces must be cleaned and free of dirt, moisture, oil and other foreign material. Remove assembly nuts and end connectors from valve body. Slide assembly nuts, with threads facing valve, onto pipe to which the end connector is to be cemented. Apply primer to inside socket surface of end connector. Never allow primer or cement to contact valve ball or end connector o-ring sealing surfaces, as leaking may result. Use a scrubbing motion. Repeat applications may be necessary to soften the surface of the socket. Next, liberally apply primer to the male end of the pipe to the length of the socket depth. Again apply to the socket, without delay apply cement to the pipe while the surface is still wet with primer. Next apply cement lightly, but uniformly to the inside of the socket. Apply a second coat of cement to the pipe, and assemble the end connector to the pipe, rotating the end connector 1/4 turn in one direction as it is slipped to full depth on to the pipe. The end connector should be held in position for approx. 30 seconds to allow the connection to "set". After assembly wipe off excess cement. Full set time is a minimum of 30 minutes at 60 to 100 F. Full cure time should be based on the chart below.

JOINT CURE SCHEDULE:

The cure schedules are suggested as guides. They are based on laboratory test data, and should not be taken to be the recommendations of all cement manufacturers. Individual manufacturer's recommendations for their particular cement should be followed.

Temperature Range During Cure Period(B) °F(°C)	Test Pressures for Pipe Sizes 1/2 to 1-1/4 In.		Test Pressures for Pipe Sizes 1-1/2 to 3 In.		Test Pressures for Pipe Sizes 4 to 5 In.		Test Pressures for Pipe Sizes 6 to 8 In.	
	Up to 180 PSI (1240 kPa)	Above 180 to 370 PSI (1240 to 2550 kPa)	Up to 180 PSI (1240 kPa)	Above 180 to 315 PSI 1240) to 2170 kPa)	Up to 180 PSI (1240 kPa)	Above 180 to 315 PSI (1240 to 2170 kPa)	Up to 180 PSI (1240 kPa)	Above 180 to 315 PSI (1240 to 2170 kPa)
60 to 100 (15 to 40)	1 h	6 h	2 h	12 h	6 h	18 h	8 h	24 h
40 to 60 (5 to 15)	2 h	12 h	4 h	24 h	12 h	36 h	16 h	48 h
20 to 40 (-7 to 5)	6 h	36 h	12 h	72 h	36 h A	4 days A	3 days A	9 days A
10 to 20) (-15 to 7)	8 h	48 h	16 h	96 h	72 h A	8 days A	4 days A	12 days A
Colder than 10 (-15)	Extreme care should be exercised on all joints made where pipe, fittings or cement is below 10°F.							

A: It is important to note that at temperatures colder than 20°F on sizes that exceed 3 in., test results indicate that many variables exist in the actual cure rate of the joint. The data expressed in these categories represent only estimated averages. In some cases, cure will be achieved in less time, but isolated test results indicate that even longer periods of cure may be required.

B: These cure schedules are based on laboratory test data obtained on Net Fit Joints (NET FIT=in a dry fit the pipe bottoms snugly in the fitting socket without meeting interference).

THREADED CONNECTION:

Threaded end connections are manufactured to ASTM specifications D2464-88. F437-88 and ANSI B2.1. Wrap threads of pipe with Teflon tape of 3 to 3-1/2 mil thickness. The tape should be wrapped in a clockwise direction starting at the first or second full thread. Overlap each wrap by, 1/2 the width of the tape. The wrap should be applied with sufficient tension to allow the threads of a single wrapped area to show through without cutting the tape. The wrap should continue for the full effective length of the thread. Pipe sizes 2" and greater will not benefit with more than a second wrap, due to the greater thread depth. To provide a leak proof joint, the pipe should be threaded into the end connection "hand tight". Using a strap wrench only. (Never use a stillson type wrench) tighten the joint an additional 1/2 to 1-1/2 turns past hand tight. Tightening beyond this point may induce excessive stress that could cause failure.

FLANGED CONNECTION:

Flange bolts should be tight enough to slightly compress the gasket and make a good seal, without distorting or putting excessive stress on the flanges. Suitable washers should be used between the bolt head and flange and the nut and flange. Bolts should be tightened in alternating sequence.

RECOMMENDED FLANGE BOLT TORQUE

FLANGE SIZE	BOLT DIA.	TORQUE FT. LBS.	FLANGE SIZE	BOLT DIA.	TORQUE FT. LBS.
1/2	1/2	10-15	2	5/8	15-25
3/4	1./2	10-15	2-1/2	5/8	20-25
1	1/2	10-15	3	5/8	20-25
1-1/4	1/2	10-15	4	5/8	20-25
1-1/2	1/2	10-15	6	3/4	30-40

NOTE: USE WELL LUBRICATED METAL BOLTS AND NUTS. USE SOFT RUBBER GASKETS.

ADJUSTMENT:

EXTREME CAUTION MUST BE TAKEN WHEN WORKING ON THIS VALVE.
THE PIPING SYSTEM MUST BE DEPRESSURIZED AND DRAINED. PROPER CARE MUST BE TAKEN. CONSULT M.S.D.S. (MATERIAL SAFETY DATA SHEETS) INFORMATION REGARDING YOUR SPECIFIC APPLICATION.

Remove the assembly nut and end connector from the "adjust" end of the body, or the complete valve body from the piping system. The front face of the seal retainer indicates which direction of rotation tightens or loosens the seal retainer, with the word "tighten" and a directional arrow, and the word "loosen" and a directional arrow. Direction of rotation may vary depending on date of manufacture. The Assembly nut should be installed on the valve "hand tight". Using a strap wrench <u>only</u> the joint may be tightened 1/2 to 3/4 of a turn past hand tight.

REPAIR:

Follow the adjustment sequence and information above, but rotating the seal retainer completely in the "loosen" direction and remove it from valve body. The o-rings and seals are now accessible for replacement using a "seal" repair kit. Carefully remove the o-rings from their respective locations taking care not to scratch their sealing surfaces. Use a non-petroleum base lubricant to lubricate the o-rings, and re-assemble the valve. See table below.

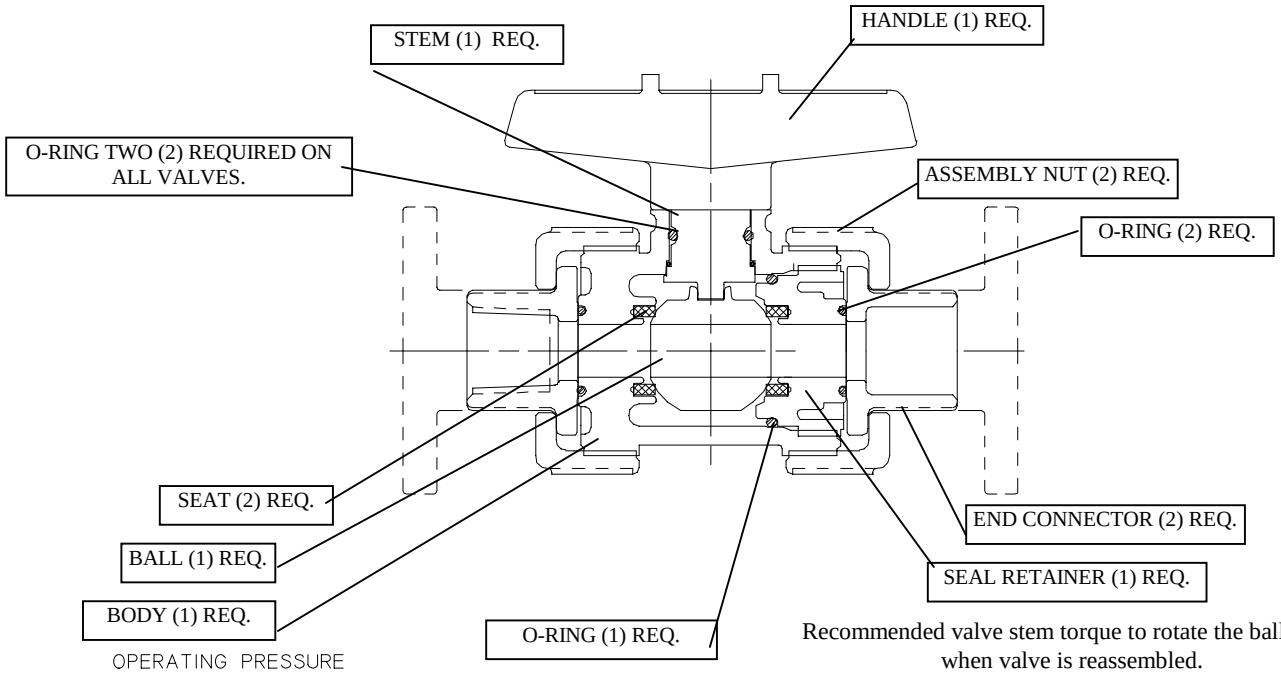

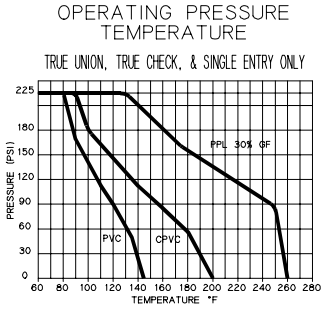

Recommended valve stem torque to rotate the ball 360° when valve is reassembled.

VALVE SIZE	TORQUE IN*LB	VALVE SIZE	TORQUE IN*LB
1/2"	30	1 1/2"	60
3 /4"	40	2"	80
1"	50	3" & 2 1/2"	140
1 1/4"	60	4" & 6"	170

TBIS REV D
8/17/99
ECR 819R

I845300

APOLLO®

Installation, Operation, and Maintenance Guide

For Apollo Series Valves:

2 Piece Threaded
and Solder End
Ball Valves

CONBRACO
Ball Valve Division

P.O. BOX 125 PAGELAND, S.C. 29728 803-672-6161

INSTALLATION, OPERATION AND MAINTENANCE OF THREADED AND SOLDER END APOLLO BALL VALVES

Valves must be installed in piping systems that comply to the applicable A.N.S.I. B31 Standard. Special considerations must be taken with respect to pipe line expansions and contractions and the media expansions and contractions within the piping system.

THREADED END INSTALLATION

1. Pipe connections to be threaded into these valves should be accurately threaded, clean and free of dirt and metal shavings.
2. Teflon tape is recommended for use as the pipe joint sealant.
3. Use two wrenches when making the pipe joint. Apply one wrench on the hex pads nearest the joint being tightened to prevent breaking the retainer-to-body seal.
4. UNION END VALVES: Remove the union nut from valve and place onto pipe. Thread the tailpiece onto the pipe using a smooth jaw wrench. Thread the union nut onto the valve body and *lightly* torque.

SOLDER END INSTALLATION

1. Piping connections to be soldered into these valves should be cut square and then cleaned with an appropriate cleaner or flux.
2. These valves are designed to be soft soldered. Apply heat with the flame directed *away* from the center of the valve body. Excessive heat can harm the Teflon seats. Solder valves only in the fully open position.
3. UNION END VALVES: Remove the union nut from valve and place onto pipe. Solder the tailpiece onto pipe, thread union nut onto valve body and *lightly* torque.

OPERATION

The valve is marked showing proper rotation direction for “ON” and “OFF” positions. Rotation is clockwise for “OFF” and counterclockwise for “ON”.

MAINTENANCE

Normal stem packing wear can be compensated for by tightening the packing gland screw clockwise. If all of the adjustment to the packing gland screw has been made, remove the lever and packing gland nut and add one or two replacement bearings on top of the old packing. Reassemble the lever and packing gland nut.
CAUTION: Do not disassemble Valve while under pressure nor with entrapped hazardous fluids therein.

General repair of the valve can be made by:

1. Close valve.
2. Remove retainer from body center section by turning counterclockwise
3. 1/4" thru 1" valves only; pry out the top seat being careful not to damage the ball. 1-1/4" thru 3" valves; the top seat will come out with the retainer.
4. Push ball out of body with finger.
5. Remove packing gland nut by turning counterclockwise and push stem down into body to remove.
6. Remove all seats and seals. To facilitate removal of the stem packing, cut with knife.
7. Replace all seats and seals as furnished in the Service Kit. Inspect the ball and stem for excessive wear or damage and replace if necessary.
8. Reverse the above procedure to reassemble using a sealant on the retainer threads equivalent to Loctite Hydraulic Sealant. **NOTE: VALVES IN OXYGEN SERVICE CAN ONLY BE SEALED WITH AN OXYGEN COMPATIBLE THREAD SEALANT.**

Union End Valves cannot be easily field repaired, therefore it is recommended that the main valve section be replaced.

NOTE: ALWAYS TEST VALVE AND SYSTEM BEFORE PUTTING THE SYSTEM INTO SERVICE.

<u>Bronze Valves</u>: **WARNING**: This product is made from Bronze Alloys which contain lead; a chemical known to the State of California to cause cancer and birth defects and other reproductive harm.

General 2-PC. BALL VALVE
Identification

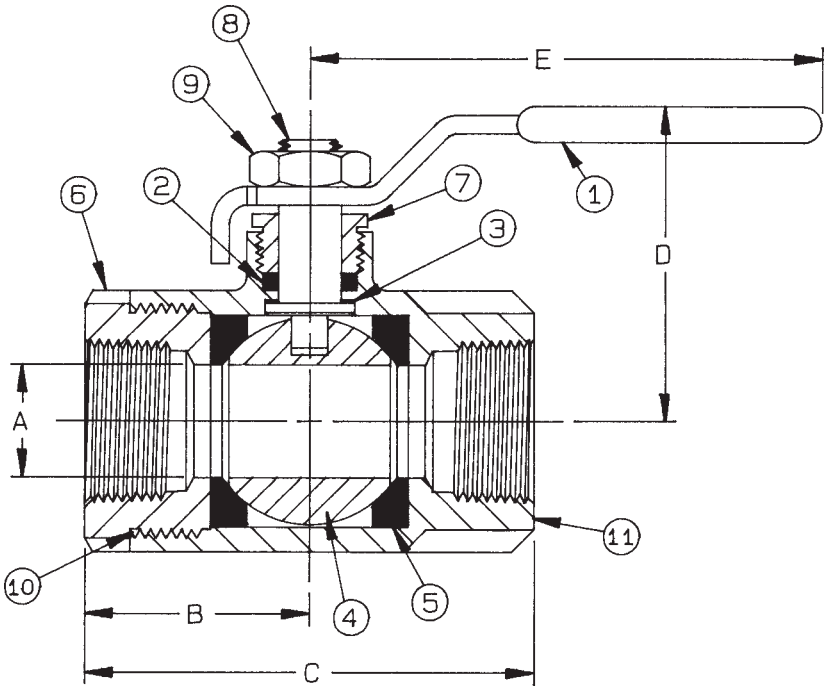

1. Lever and grip
2. Stem packing
3. Stem bearing
4. Ball
5. Seat (2)
6. Retainer
8. Stem
9. Lever nut
10. Body seal
11. Body

FLR-FV-301 FLR-FV-302 GCS-FCV-301 GCS-FCV-302 GCS-FCV-303..4
GCS-FV-301 GCS-HV-301..2 GCS-HV-303 GCS-HV-304..5 GCS-HV-306

Resilient Seated Butterfly Valves

ABZ VALVE

A GFT COMPANY

Figures 909/919

Sizes
1.5" - 12"
Rated Up To 150 PSI

ABZ VALVES & CONTROLS
PO Box 157 • 113 W. Main • Madison, KS 66860
620-437-2440 • FAX 620-437-2435
www.abzvalve.com • info@abzvalve.com

ABZ Precision Built Butterfly Valves

Resil-O-Seat™ Seated Valves for Chemical and Abrasion Resistance Applications.

The figures 909/919 provide excellent flow characteristics with the thin profile of their one-piece disc/stem. Various materials are available for a wide selection of applications.

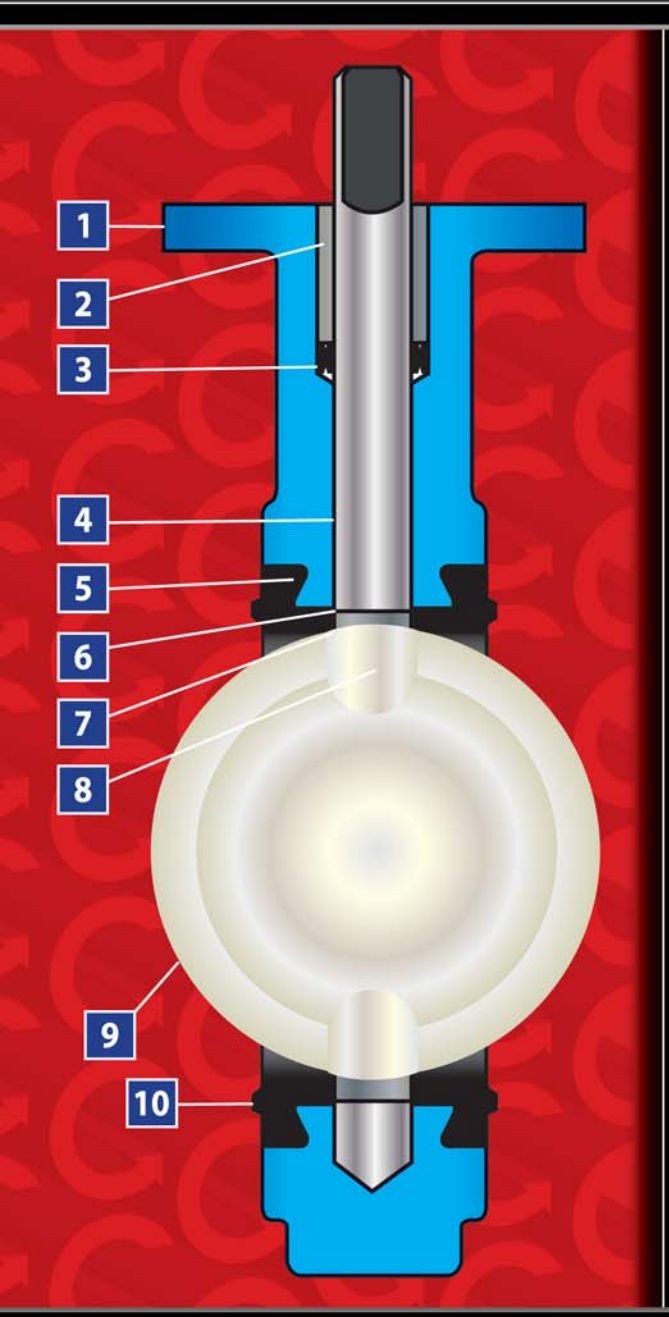

1 Bodies are machined to high tolerances. Guaranteed standard dimensions for interchangeability of parts and operators.

2 Top bushings protects the stem from side thrust of operators. They are made of impact and corrosion resistant materials.

3 Special double V-shape of stem seal self-adjusts to protect the stem area for either vacuum or pressure use.

4 Two-piece body and one-piece disc/stem makes field replacement of seat and disc/stem quick and easy.

5 The special snap-in Resil-O-Seat™ design fixes seat in place without bonding. The Resil-O-Seat™ is 100% field replaceable - no special tools required.

6 The ABZ Ring Seal on the Teflon® seat is a molded part of the seat. It is of special design so as to contain an o-ring creating a positive seal around the stem as well as between the seat and valve body. This positive secondary seal eliminates leakage into the stem journal as well as migration of line media behind the seat. Teflon® ring seals are located at top and bottom on all Teflon® seated valves.

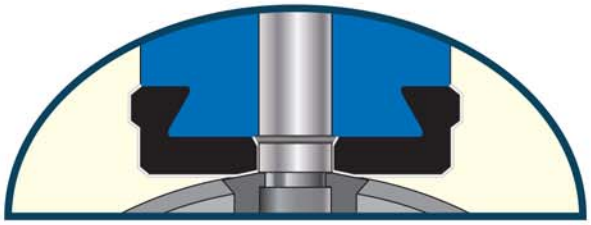

7 Stem and body are isolated from line media by the interference fit of the primary seal created between the disc and seat.

8 Specially designed disc/stem prevents distortion of disc under high pressure. Thin disc allows for maximum open flow.

9 Disc edge is individually processed through machining for a smooth edge, providing a bubble tight shut-off and maximum seat life.

10 Resil-O-Seat™ forms a seal against all standard ANSI 125/150 flanges. Gasketing requirements are eliminated.

909 is a wafer style body
919 is a full lug style body

ABZ VALVE

FIGURES 909/919

Valve Dimensions

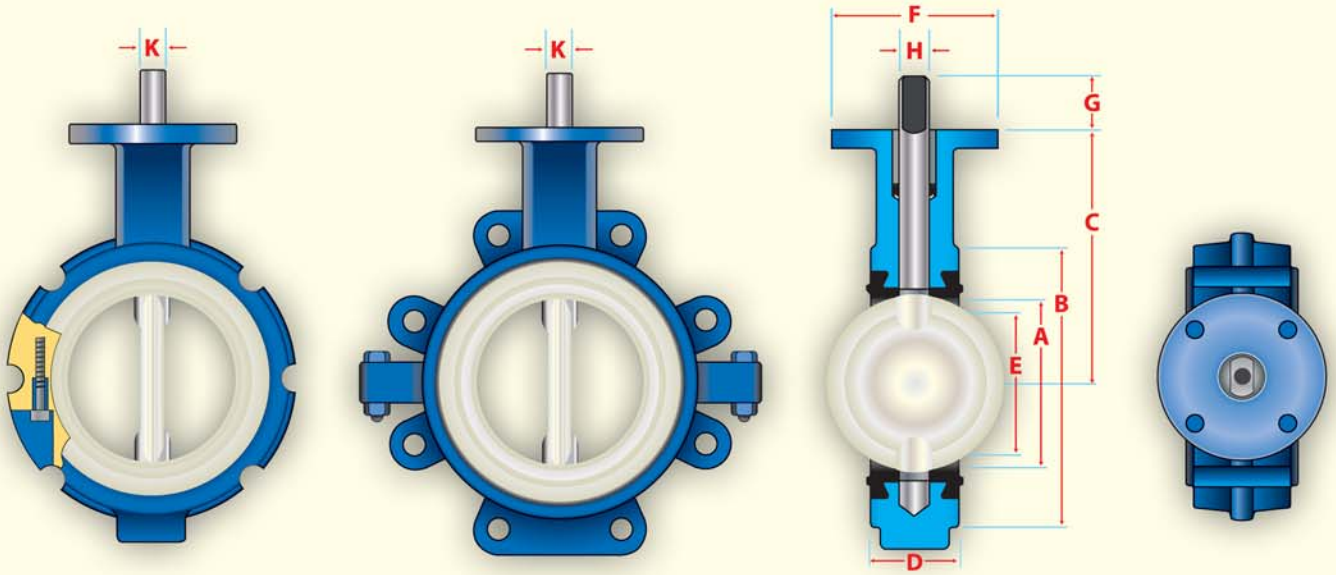

All standard seats are Food Grade with the exception of Viton

Valve Size	DIMENSIONS									TOP PLATE DRILLING			FIG. 919 TAPPED LUG DATA			WEIGHT (POUNDS)	
	A	B	C	D	E	F	G	H	K	Bolt Circle	No. Holes	Hole Dia.	Bolt Circle	No. Holes	Tap	909	919
*1 1/2	1 3/4	3 1/4	3 3/4	1 3/16	1 7/16	2 3/8	3/4	3/8	1/4	1 3/4	4	9/32				3	
2	2	4 1/8	3 15/16	1 5/8	1 3/8	4	1 1/4	9/16	3/8	3 1/4	4	7/16	4 3/4	4	5/8-11 UNC	6	8
*2 1/2	2 1/2	4 3/16	4 1/2	1 3/4	2 1/16	4	1 1/4	9/16	3/8	3 1/4	4	7/16	5 1/2	4	5/8-11 UNC	7	10
3	3	5 3/8	4 7/8	1 3/4	2 9/16	4	1 1/4	9/16	3/8	3 1/4	4	7/16	6	4	5/8-11 UNC	8	11
4	4	6 3/4	6	2	3 5/8	4	1 1/4	5/8	7/16	3 1/4	4	7/16	7 1/2	8	5/8-11 UNC	13	20
*5	5	7 3/4	6	2 1/8	4 3/4	4	1 1/4	3/4	1/2	3 1/4	4	7/16	8 1/2	8	3/4-10 UNC	15	24
6	5 3/4	8 3/4	6 1/2	2 1/8	5 1/2	4	1 1/4	3/4	1/2	3 1/4	4	7/16	9 1/2	8	3/4-10 UNC	17	27
8	7 3/4	10 7/8	8 5/16	2 1/2	7 1/2	6	1 1/4	7/8	5/8	5	4	9/16	11 3/4	8	3/4-10 UNC	33	44
10	9 3/4	13 1/4	9	2 1/2	9 5/8	6	2	1 1/8	1/4	5	4	9/16	14 1/4	12	7/8-9 UNC	42	61
12	11 3/4	16 1/16	10 3/4	3	11 9/16	6	2	1 1/8	1/4	5	4	9/16	17	12	7/8-9 UNC	67	93

*Not available with Teflon® disc.

STANDARD CONSTRUCTION SPECIFICATIONS:

Body: Cast Iron, 316 Stainless Steel and Aluminum (Wafer)

Disc/Stem: 316 Stainless Steel, 17-4 Stainless Steel, and 17-4 Stainless Steel / Teflon® covered Disc

Resilient Seat: Teflon®. Seats with EPDM, Buna or Viton backing material. EPDM, Buna-N, Viton

Stem Bushing: Teflon® – Graphite Impregnated

Stem Packing: Buna-N and Viton

Additional materials are available for a wide selection of applications.

NOTES:

1. Dimension "K" not applicable to 10" or 12" size. The 10" and 12" stem is round with ¼" Key.
2. The figures 909 and 919 cannot be used on pipe or flange with an inside diameter less than "E" dimension.
3. Valves are rated up to 150 PSI bi-directional service and 75 PSI end of line rating. Undercut disc is rated up to 50 PSI bi-directional service and 25 PSI end of line rating. Teflon® covered disc rated to 150 PSI bi-directional service, 75 PSI end of line rating and not available in undercut. Teflon® seats and are not available with an undercut disc. 1.5" valve not available in lug body, with Teflon® or undercut disc.
4. Designed in accordance with sections of API 609 Category A, ASME 16.1/16.5, ASME 16.34 and MSS SP67. Design tested in accordance with API 598.
5. Compatible with ANSI Class 125/150 flange standards.

Rated Flow Coefficient (Cv) - Figure 909/919

Valve Size	ANGLE OF DISC OPENING								
	10°	20°	30°	40°	50°	60°	70°	80°	90°
1 1/2	0.22	1.7	6	12	23	41	71	109	155
2	1.67	7.7	17	29	49	76	121	184	263
2 1/2	2.50	11.0	25	44	70	112	186	321	445
3	3.33	15.7	37	64	107	170	290	492	701
4	5.00	27.7	63	111	180	286	499	926	1,321
5	8.33	43.7	99	178	280	456	794	1,473	2,123
6	13.33	58.7	136	243	391	634	1,129	1,950	2,826
8	20.00	107.3	247	436	697	1,127	1,940	3,604	5,272
10	31.67	174.0	394	699	1,108	1,823	3,132	5,733	8,395
12	47.00	251.7	578	1,007	1,690	2,734	4,618	8,309	12,214

Sized for stainless disc, does not cover encapsulated disc trims.

Cv is defined as the volume of water in U.S.G.P.M. that will flow through a given restriction or valve opening with a pressure drop of one (1) p.s.i. at room temperature. Recommended control angles are between 20°-70° open.

Torque Chart - Figure 909/919

Valve Size	NORMAL CONDITIONS				SEVERE CONDITIONS			
	Δ P=0	Δ P=50	Δ P=100	Δ P=150	Δ P=0	Δ P=50	Δ P=100	Δ P=150
1 1/2	107	114	120	127	133	143	150	160
2	221	230	240	250	373	384	400	406
2 1/2	269	283	288	302	454	464	475	486
3	322	341	365	379	540	568	589	611
4	480	514	542	576	816	848	886	918
5	653	706	754	806	1,102	1,162	1,220	1,274
6	907	1,008	1,109	1,210	1,529	1,642	1,756	1,868
8	1,512	1,714	1,915	2,112	2,549	2,776	3,002	3,229
10	2,318	2,621	2,900	3,224	3,910	4,250	4,590	4,931
12	3,125	3,629	4,138	4,637	5,270	5,838	6,404	6,971

Undercut disc available.

All torques shown in inch lbs. 20% Safety factor already included.

ABZ VALVES & CONTROLS, INC.
A Global Flow Technologies Company
P.O. Box 157 • 113 West Main • Madison, KS 66860
PHONE: 620-437-2440 • FAX: 620-437-2435
www.abzvalve.com • www.globalflowtech.com
info@abzvalve.com

The data presented in this bulletin is for general information only. Manufacture is not responsible for compatibility or acceptability of these products in relation to system requirements. Patents and Patents Pending in U.S. and foreign countries. All rights reserved. Printed in U.S.A. ABZ reserves the right to change product designs and specifications without notice. Copyright 2008.

Certified System ISO 9001-2008

ELECTRIC ACTUATOR *"SR"* SERIES

SPRING RETURN ACTUATOR

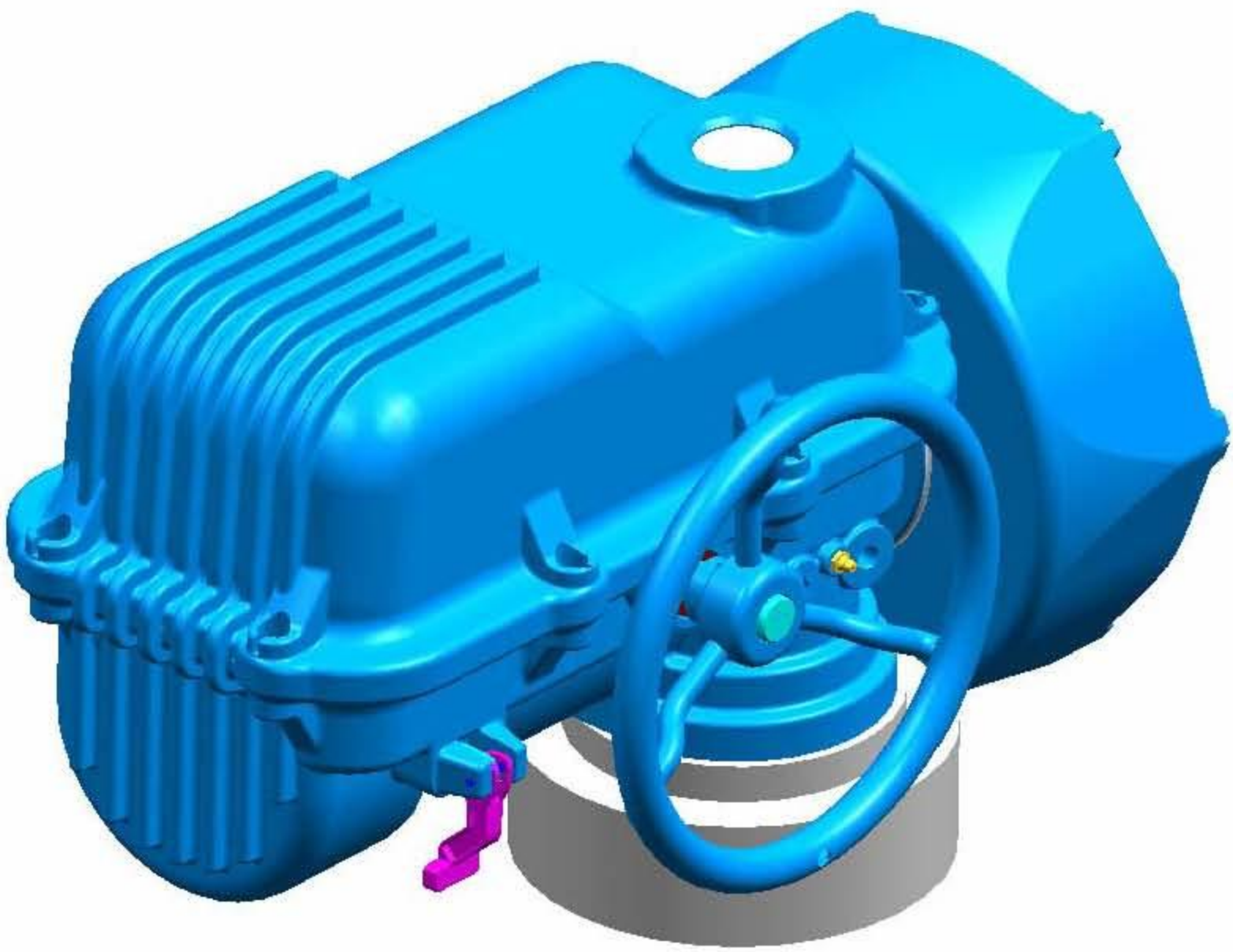

1 .PERFORMANCE

Model	Max output torque	Spring Return Time(90°)	Operating time (90°/3000rpm)		duty	Motor
	kg.m		Close	Open		
SR-20	20kgm	2sec	32sec	50sec	100%	200W

Modulating Control		Rated Current (A)			Number of Handle turns	Weight(kg)
Input	Output	110VAC	220VAC	380 /440VAC		
4-20mA DC 1 - 5V DC 1 - 10V DC	4-20mA DC	3.5A	1.6A	1.6A	80	60kg

2. STANDARD SPECIFICATION

Enclosure	Explosin Proof & watertight Enclosure Ex d II B T4 IP67
Ambient Temperature	-20℃ ~ 55℃
Power Supply	1Ph 110/230 VAC 50/60Hz
Limit Switch	Open/Close Limit switch (250VAC 16A)
Travel Angle	90° ± 5°
Indicator	Continuous Position indicator
Self Locking	Provided by means of worm wheel
Mechanical Stops	External Adjustable Screws
Space Heater	20W
Conduit Entries	3-PF 3/4"
	Option : 3-M20, 3-NPT 3/4"
Lubrication	Shell ALVIDA EP2
Materials	Aluminium Alloy
Surface Treatment	Anodizing
Coating	Polyester (TGIC - Free)

3. FEATURES

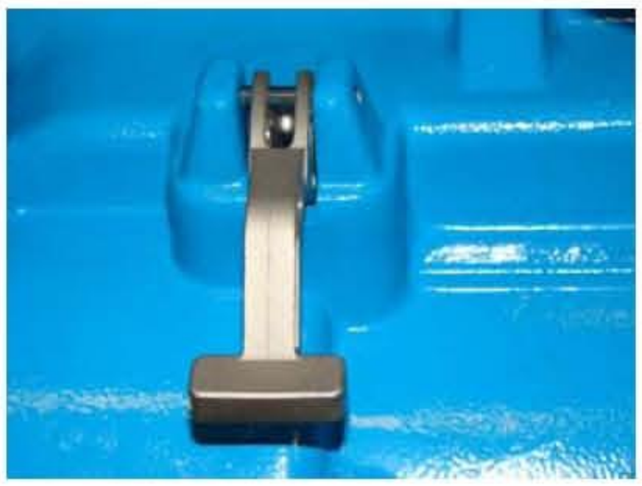

MANUAL OVERRIDE LEVER

CONTROL BOARD

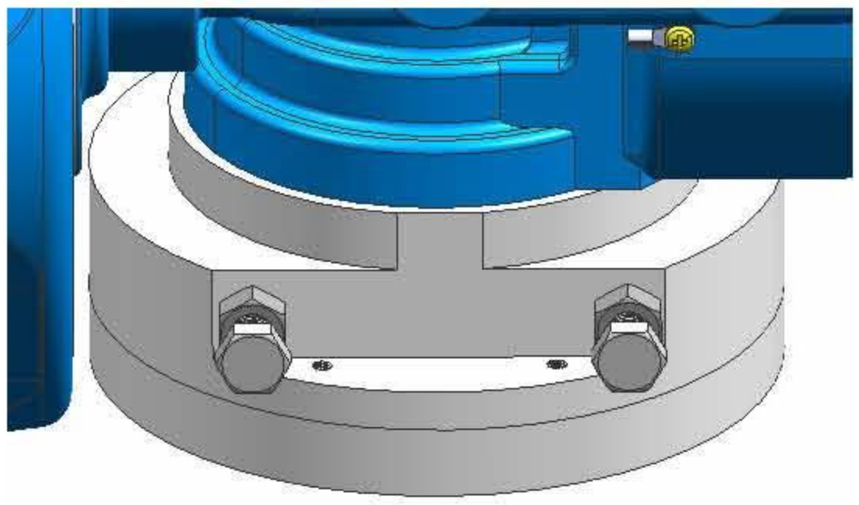

DASH POT & STOPPER BOLTS

LIMIT SWITCH

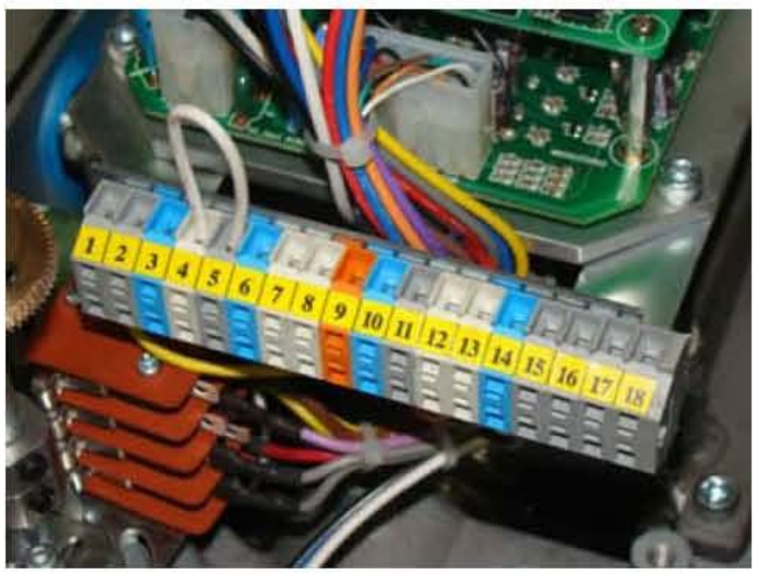

WIRING CONNECTOR

ELECTRIC BRAKE

4. SPRING CONFIGURATION

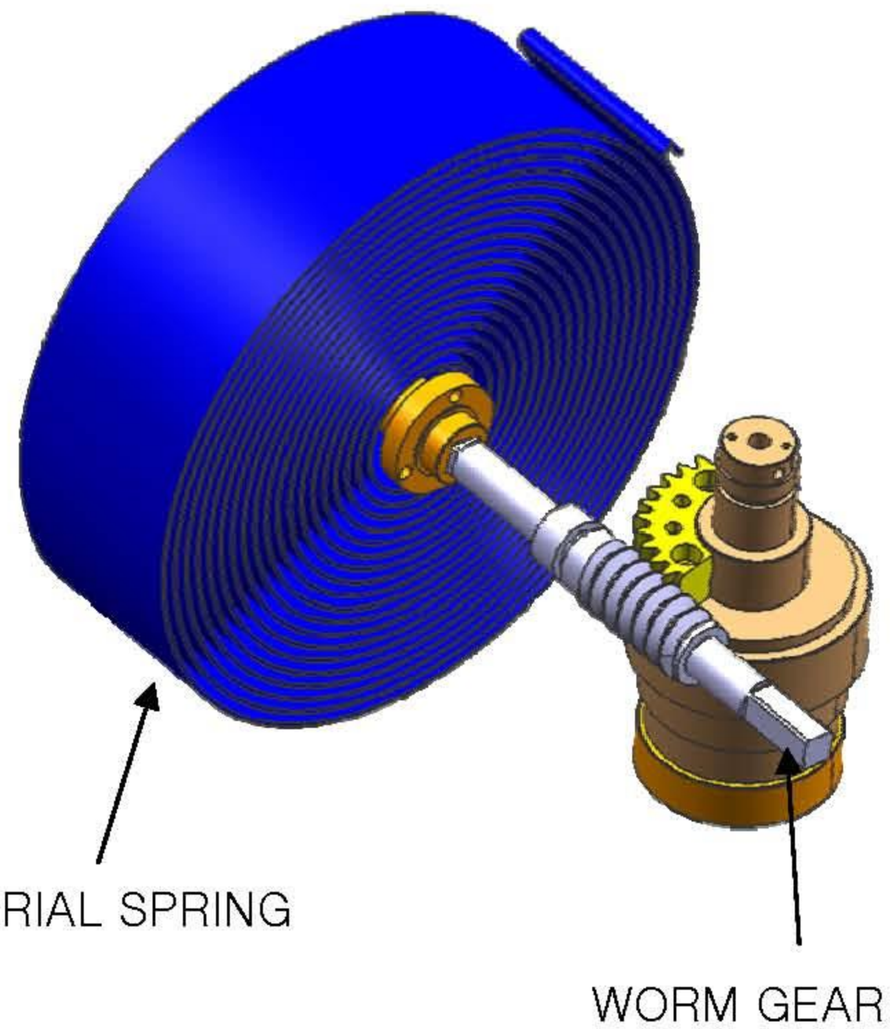

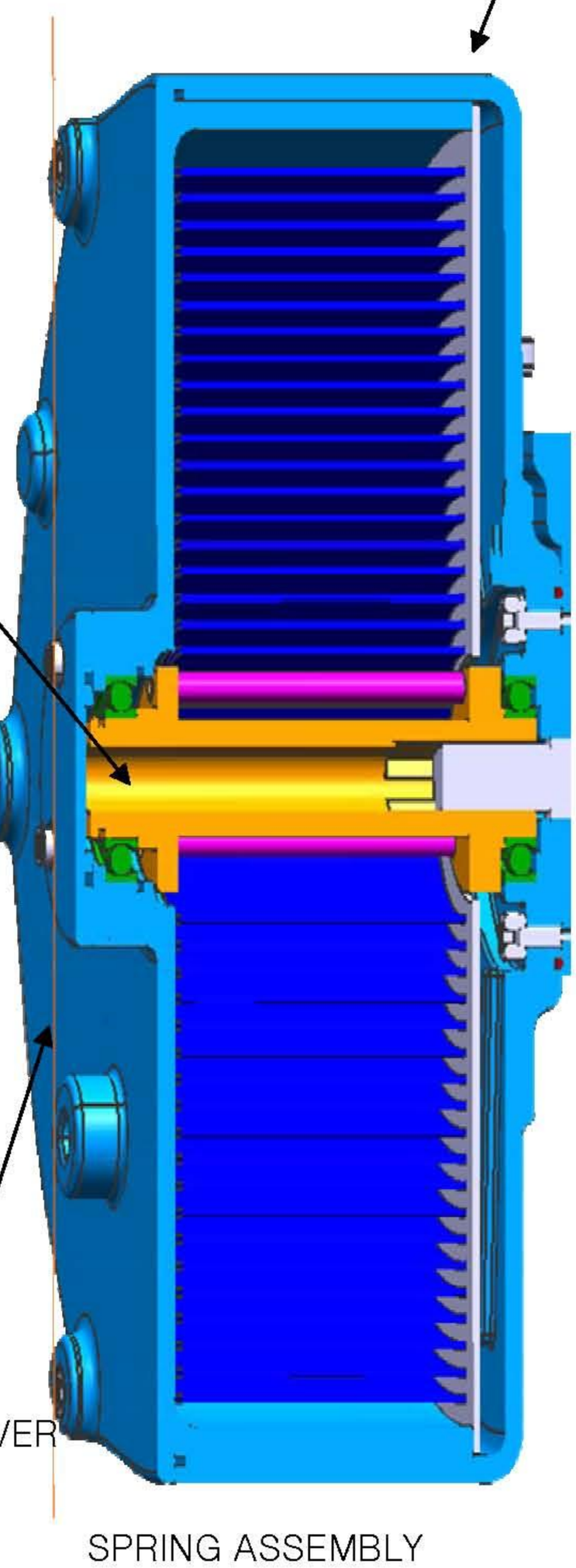

SPRIAL SPRING SPEC

SIZE	1.5t x 80 x 15M
MATERIALS	AST
TORQUE	GRAPH

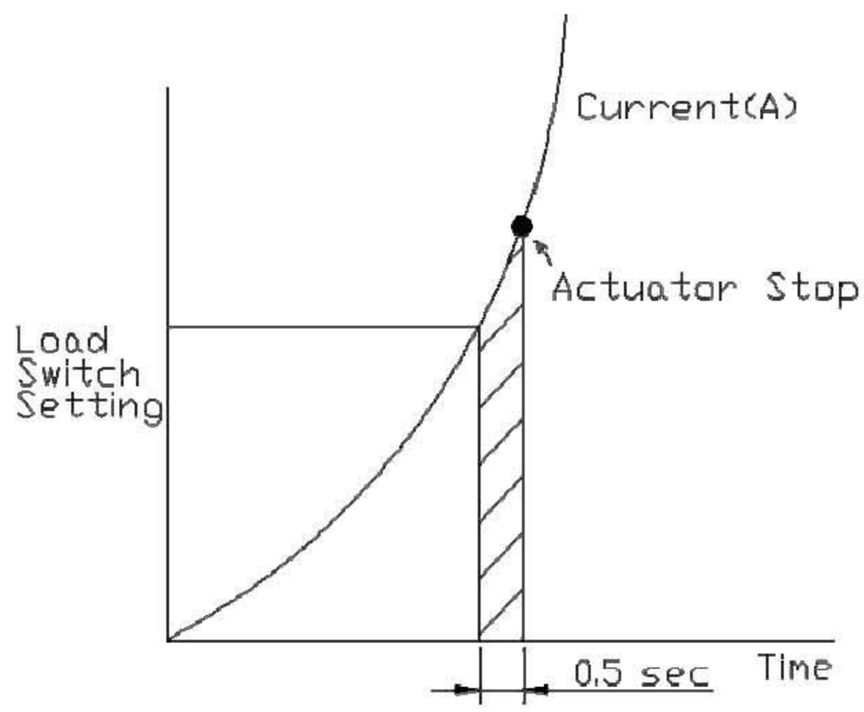

5. SPRING DIMENSION

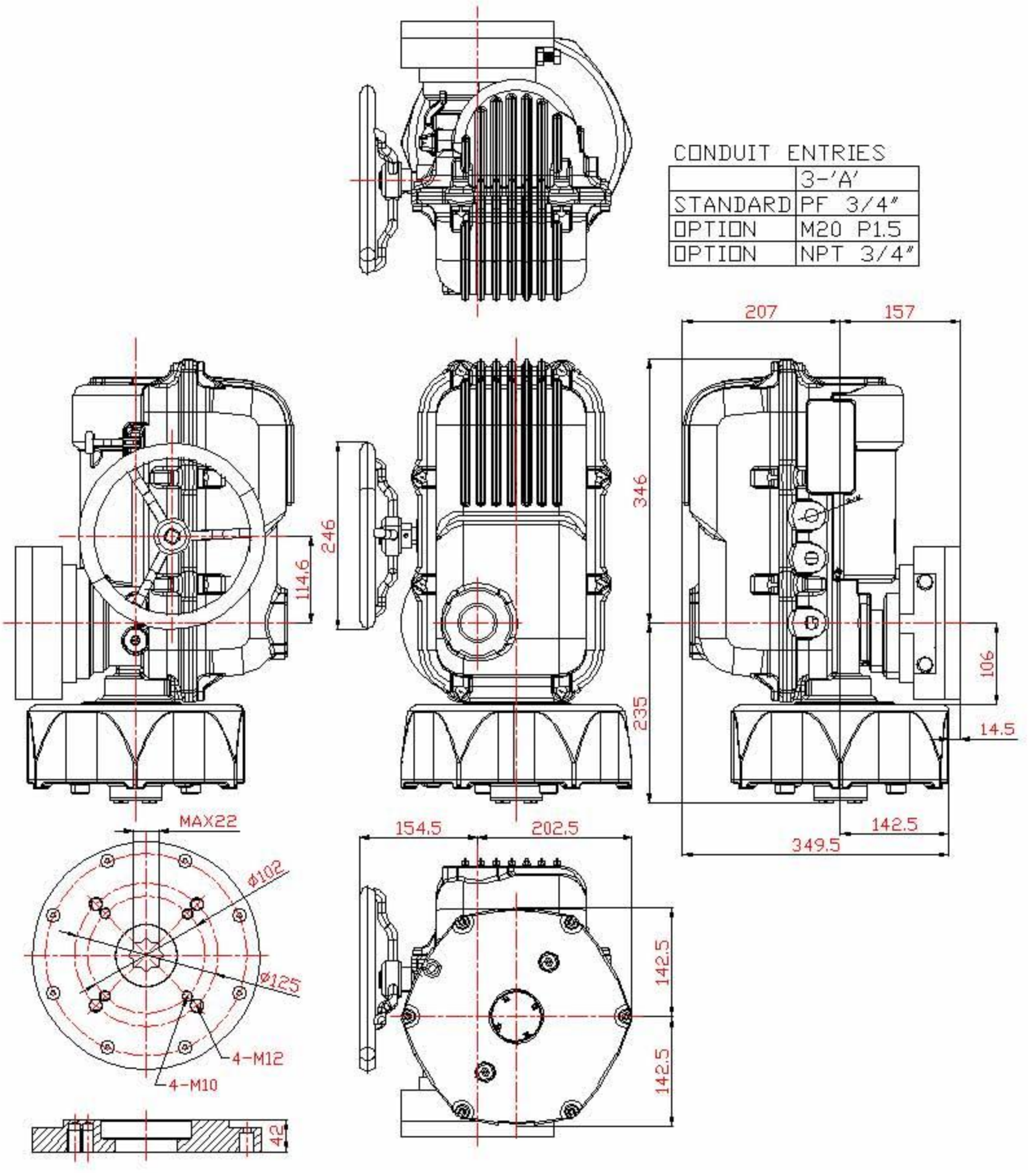

6. WIRING

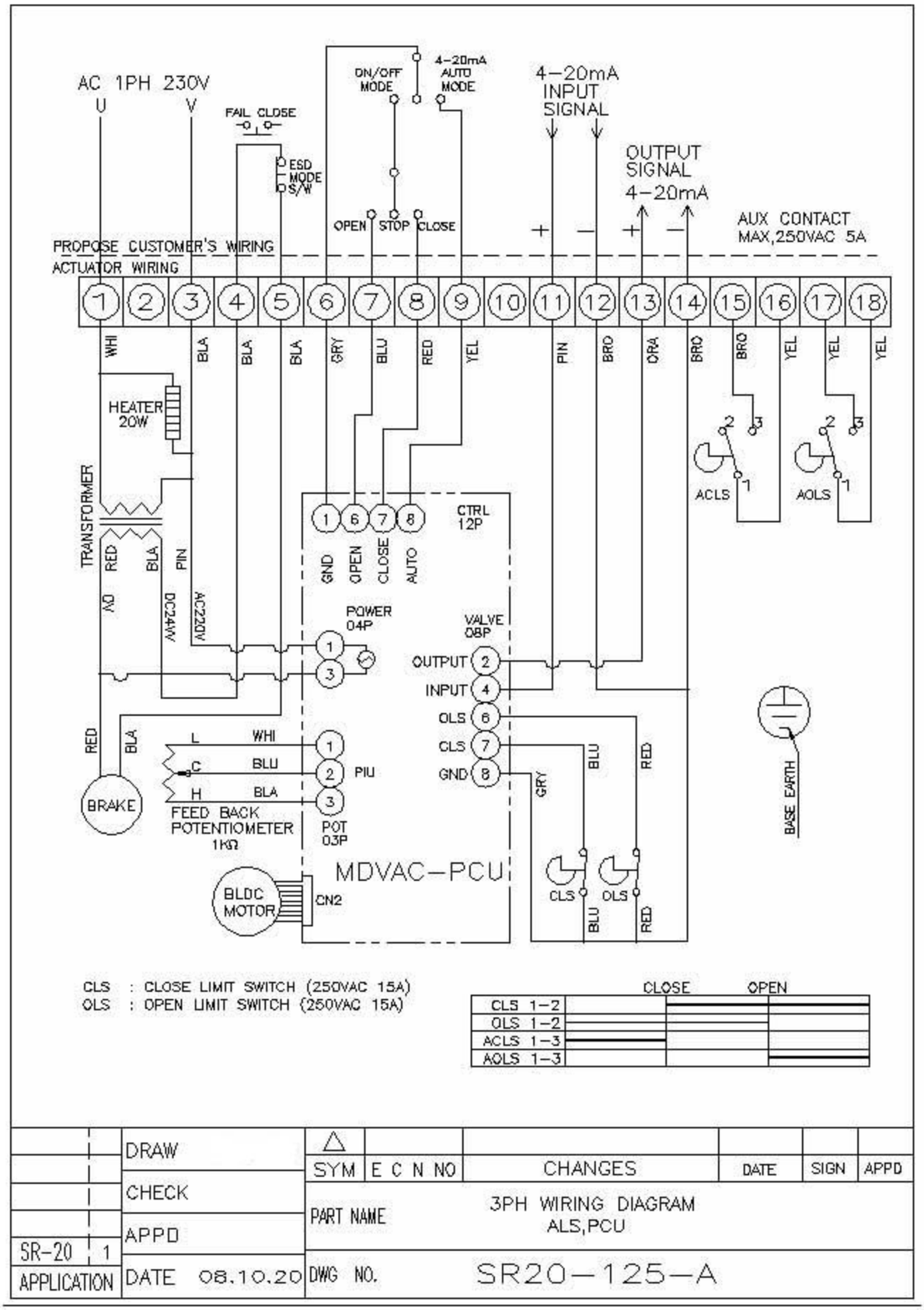
AC 1PH 230V
U
V
FAIL CLOSE
ESD MODE S/W
ON/OFF MODE
4-20mA AUTO MODE
OPEN
STOP
CLOSE
4-20mA INPUT SIGNAL
OUTPUT SIGNAL 4-20mA
AUX CONTACT MAX,250VAC 5A
PROPOSE CUSTOMER'S WIRING
ACTUATOR WIRING
HEATER 20W
TRANSFORMER
CTRL 12P
GND
OPEN
CLOSE
AUTO
POWER 04P
VALVE 08P
OUTPUT
INPUT
OLS
CLS
GND
ACLS
AOLS
BRAKE
FEED BACK POTENTIOMETER 1KΩ
POT 03P
PIU
BLDC MOTOR
CN2
MDVAC-PCU
BASE EARTH
CLS : CLOSE LIMIT SWITCH (250VAC 15A)
OLS : OPEN LIMIT SWITCH (250VAC 15A)
CLOSE
OPEN
CLS 1-2
OLS 1-2
ACLS 1-3
AOLS 1-3
DRAW
CHECK
APPD
DATE 08.10.20
SR-20 1
APPLICATION
SYM
E C N NO
CHANGES
DATE
SIGN
APPD
PART NAME
3PH WIRING DIAGRAM ALS,PCU
DWG NO.
SR20-125-A

7. MANUAL MODE

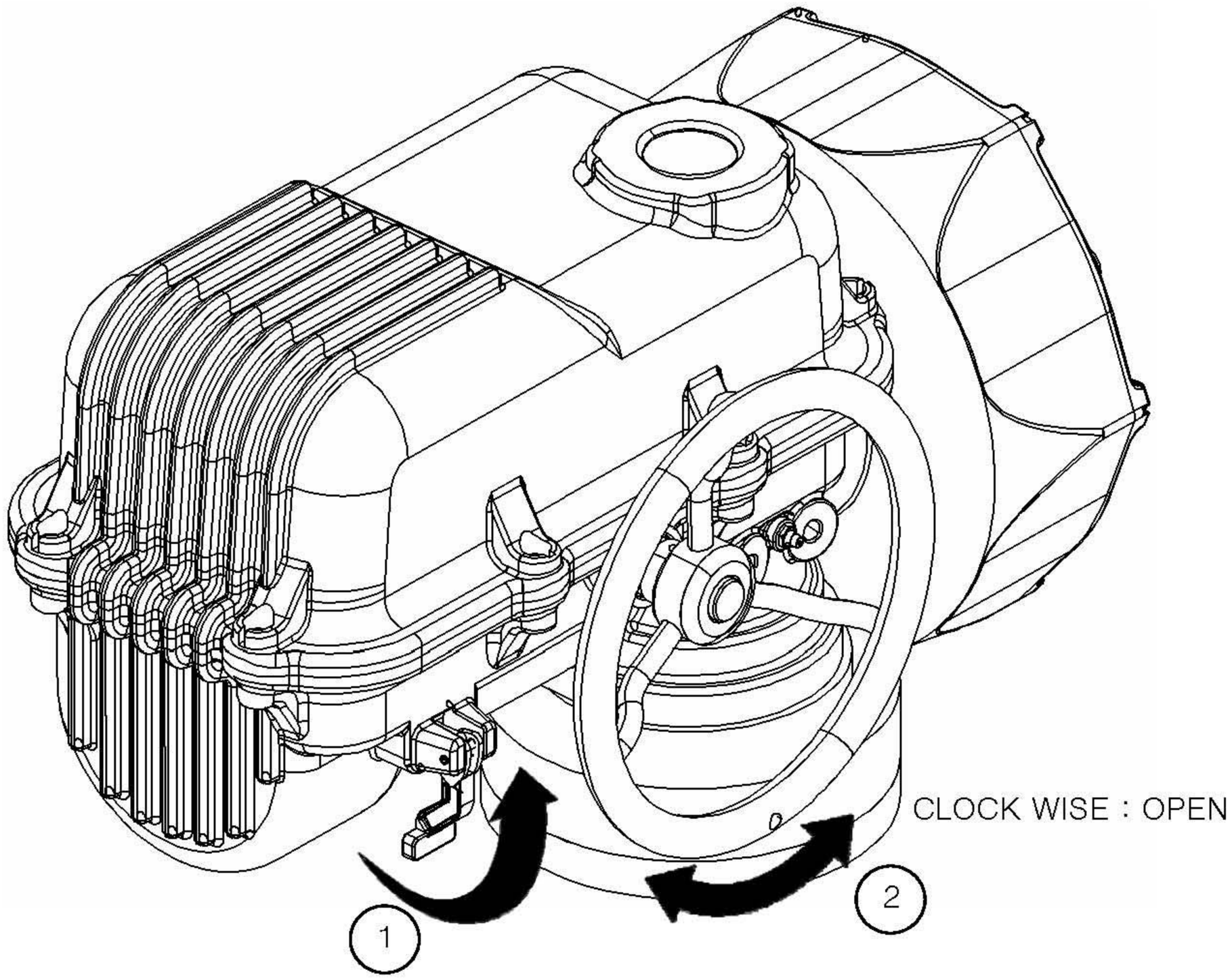

1. PUSH UP MANUAL OVERRIDE HANDLE FOR MANUAL OPERATION.

2. CHECK PROPER WORKING BY HANDLE WHEEL TURNING RIGHT AND LEFT.

3. MANUAL OVERRIDE HANDLE SHOULD BE RETURN FOR ELECTRIC AND SPRING OPERATION.

8. ACTUATOR SETTING

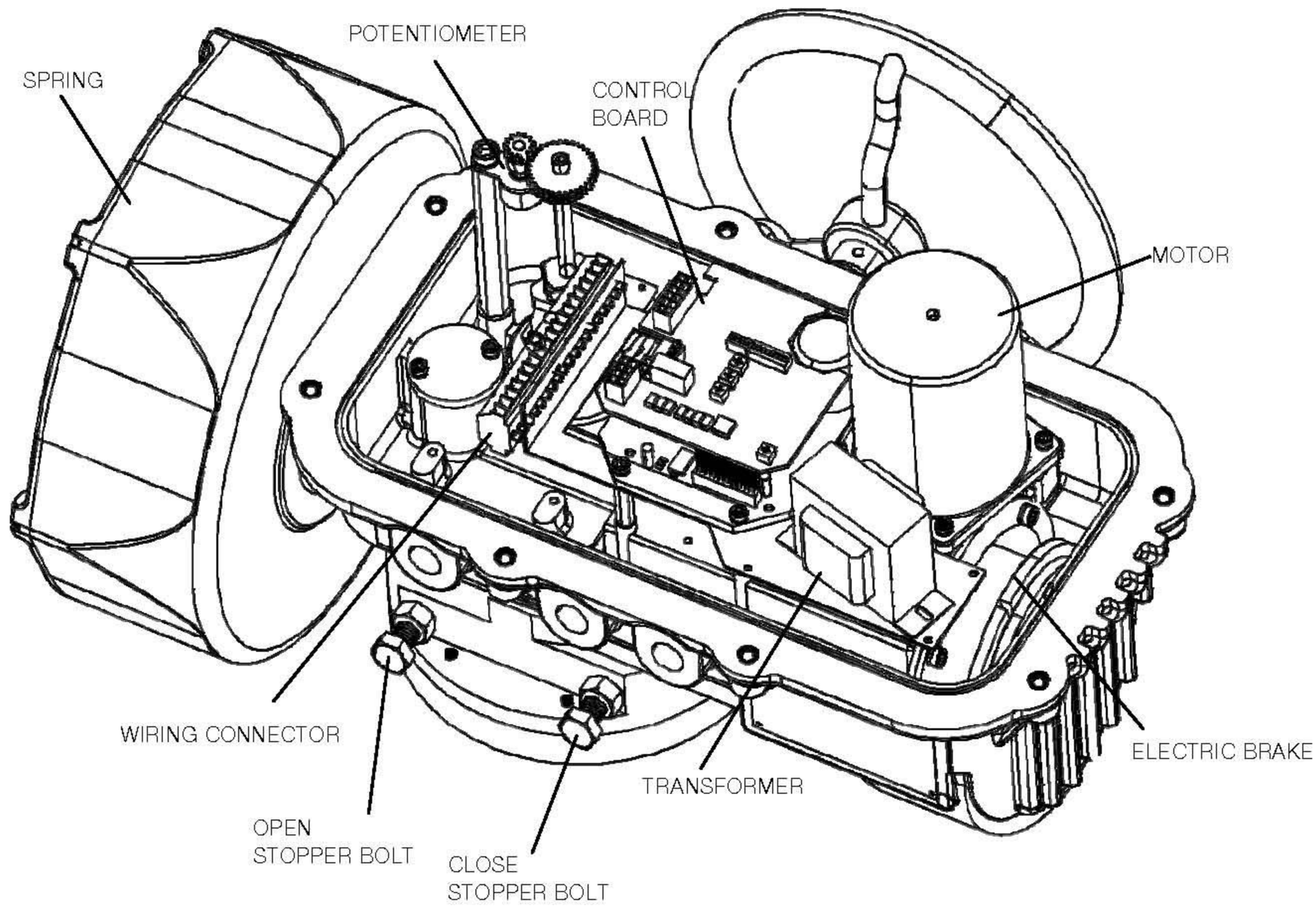

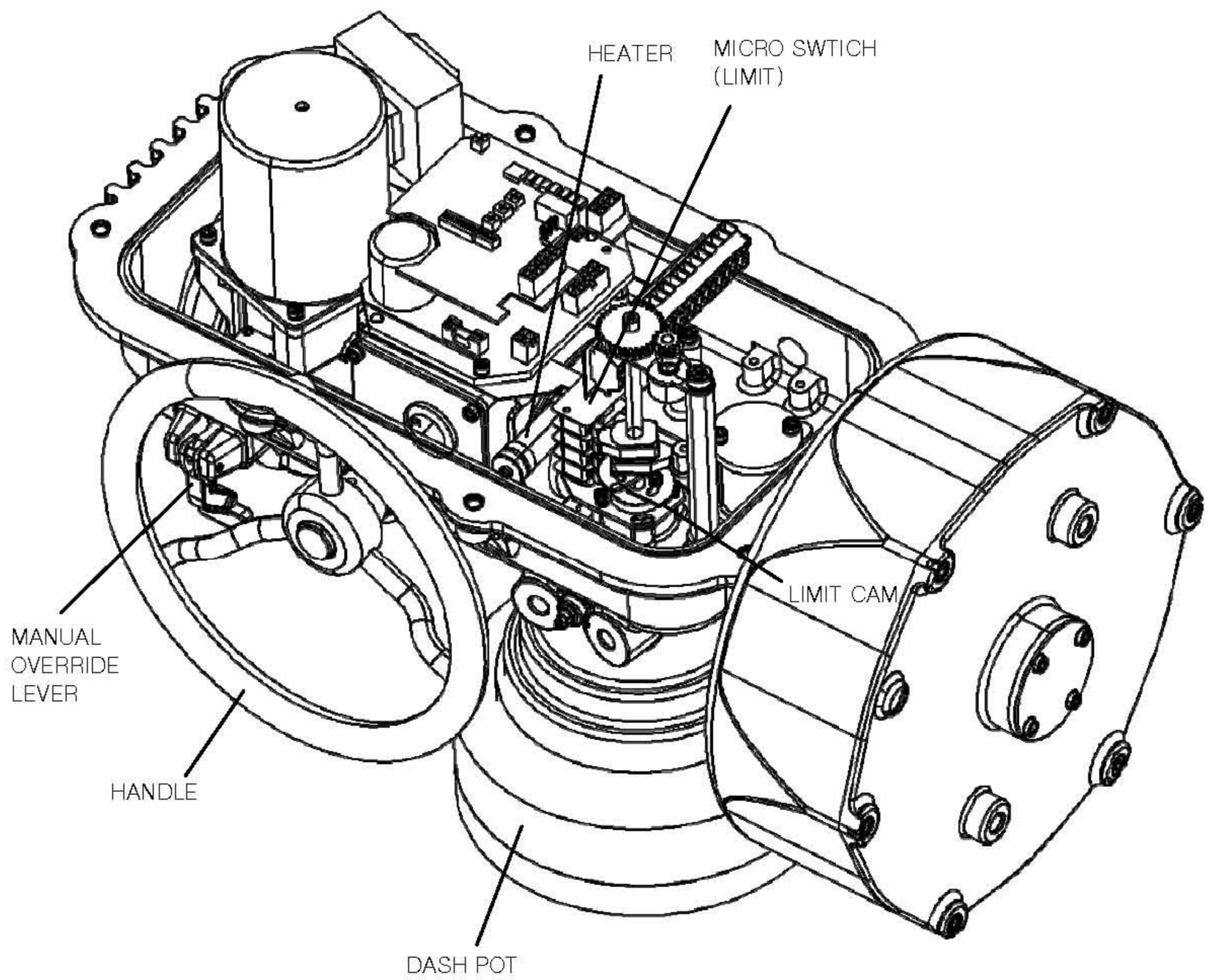

8-1. LIMIT SETTING

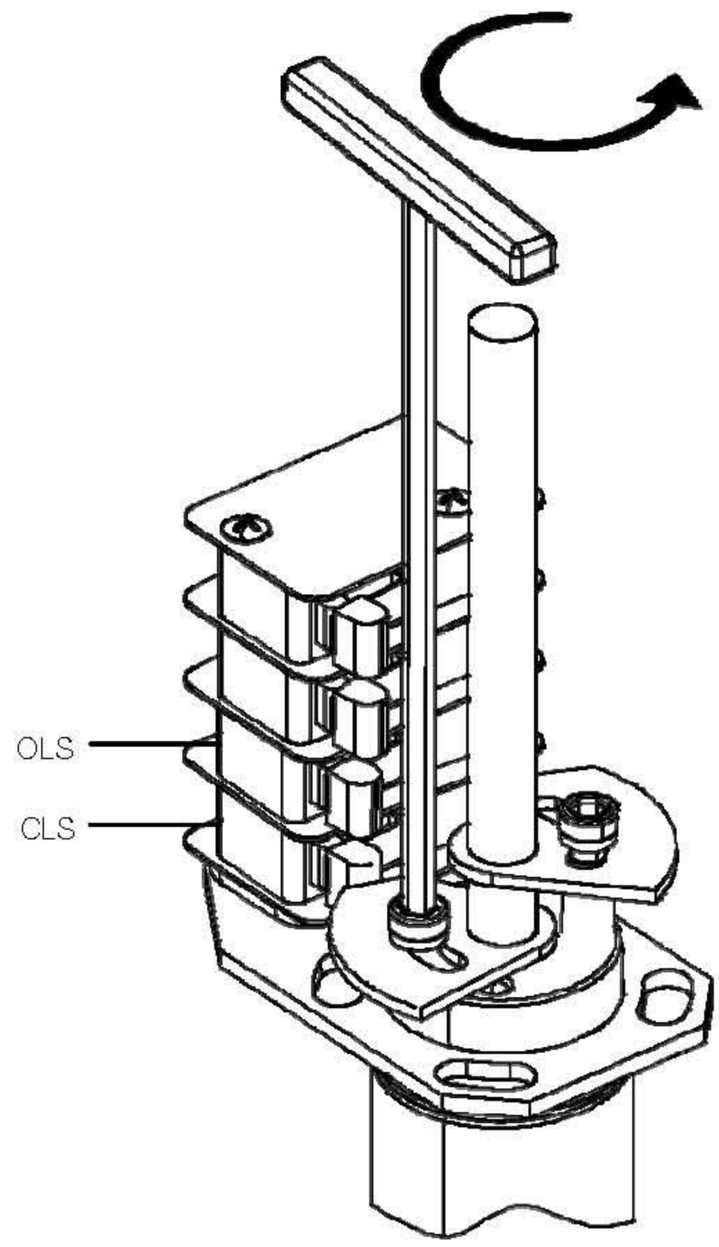

AOLS	Dry contact Open Limit Switch
ACLS	Dry contact Close Limit Switch
OLS	Open Limit Switch
CLS	Close Limit Switch

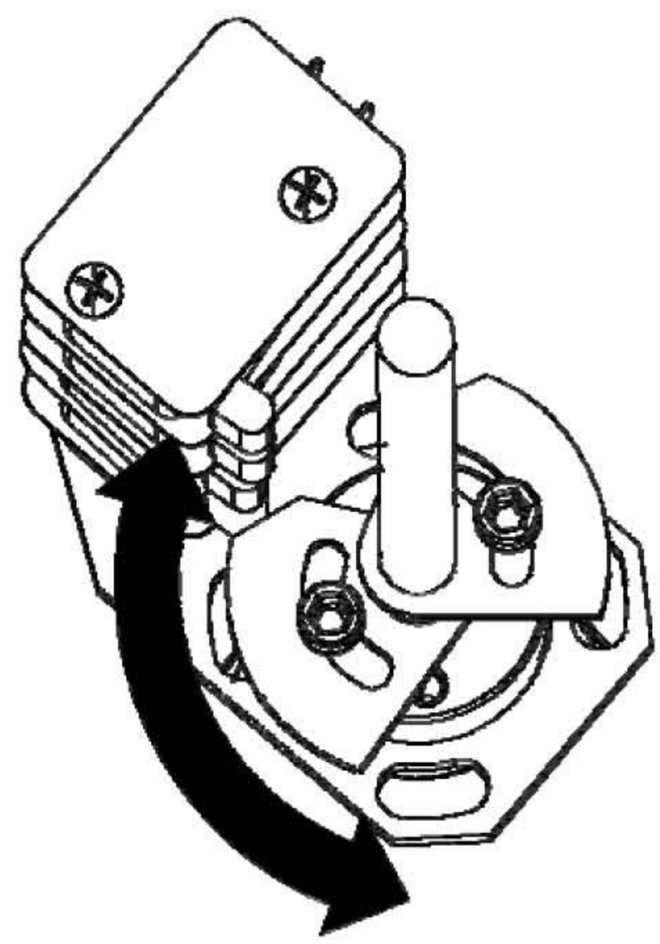

ADJUST LIMIT SWITCHES FOR ACCORD TO VALVE END POSITIONS OPEN/CLOSE

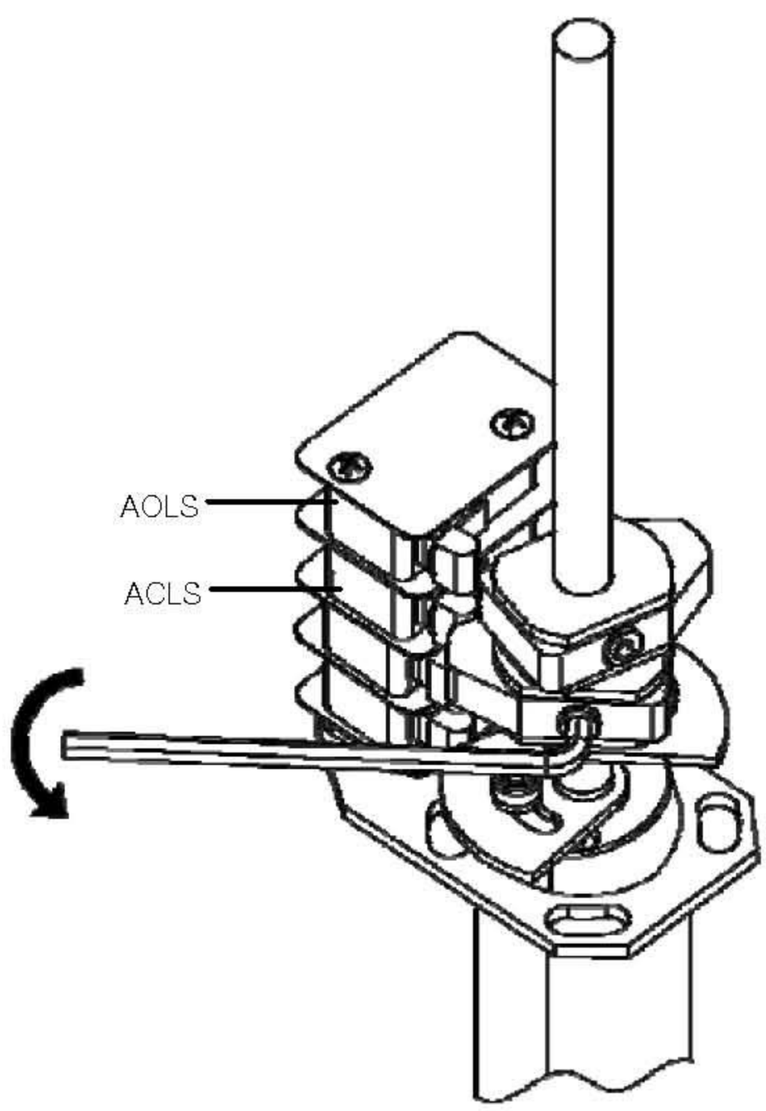

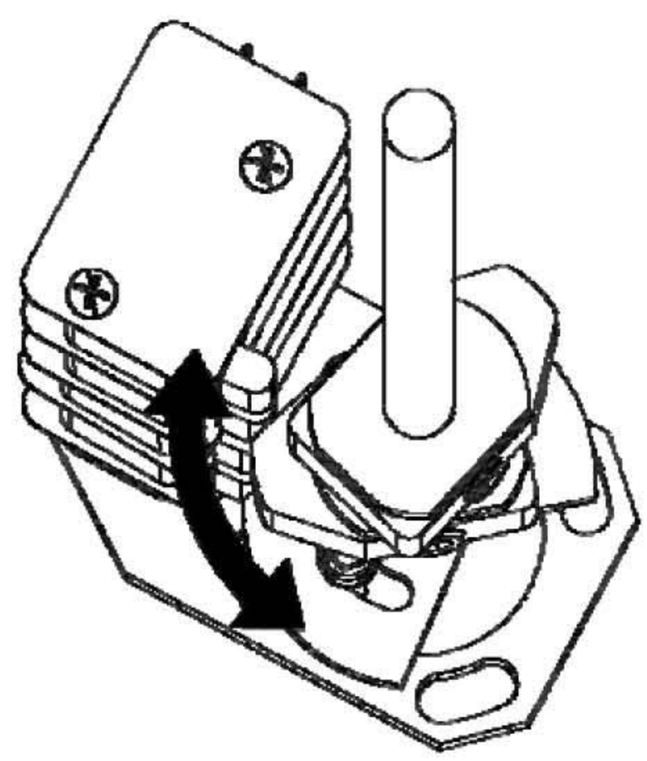

ADJUST LIMIT SWITCHES FOR ACCORD TO VALVE END POSITIONS OPEN/CLOSE

8-2. POTENTIOMETER SETTING

Full Closed Position set
85~120 Ω from factory.

After Limit Setting always need
recheck Closed 85~120 Ω.

POTENTIOMETER SPEC

MAKER	Sakae
MODEL	FCP22AC
	1000 ± 15%

Always required auto callibration
after resetting limit s/w and PIU

8-3. DASH POT & STOPPER BOLTS SETTING

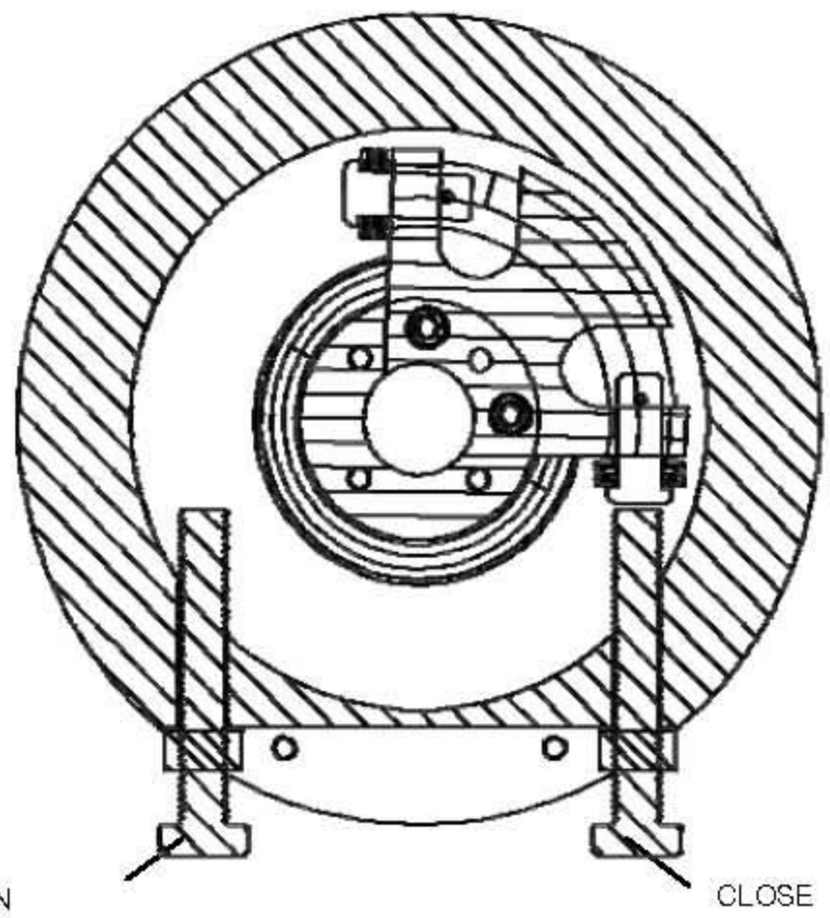

Make actuator full close/open
and make dash pot bolts touch
the worm gear after that loosen
bolts 2 ~ 3 turn outward.

9. CONTROL BOARD SPEC

MDAVC - CPU

Size	110 x 110 x 70
Power	AC90 ~ 260VAC (50/60HZ)
Resolution	1/500
Dead Band	0.6%(0.1mA)
Time adjustment	0.5sec
Operating	- 10C ~ 70C
Operating Humidity	90% RH Max (Non condensing)
Input signal	4~20mA / 1-5 VDC
Output signal	4~20mA / 1-5 VDC
Dielectric strength	AC1800V/1 min
Insulation	DC500V (Mega tester) more than 100M Ohm

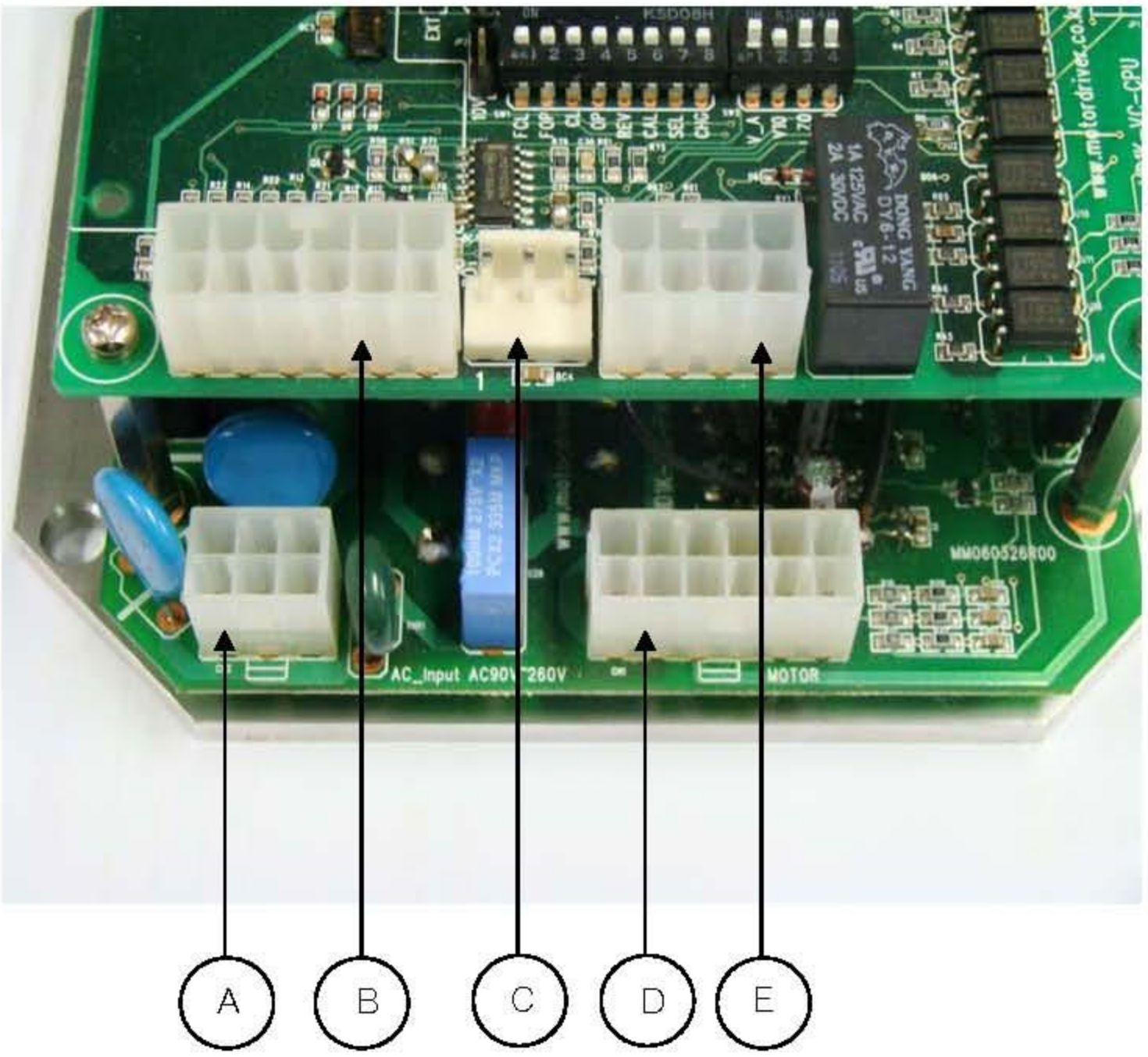

NUMBER	NAME	MODEL
A	Main power connector	MOLEX 5566 - 6
B	Control connector	MOLEX 5566 - 12
C	P.I.U	JST B30 - VH
D	Motor connector	MOLEX 5566 - 12
E	In/Output connector	MOLEX 5566 - 8

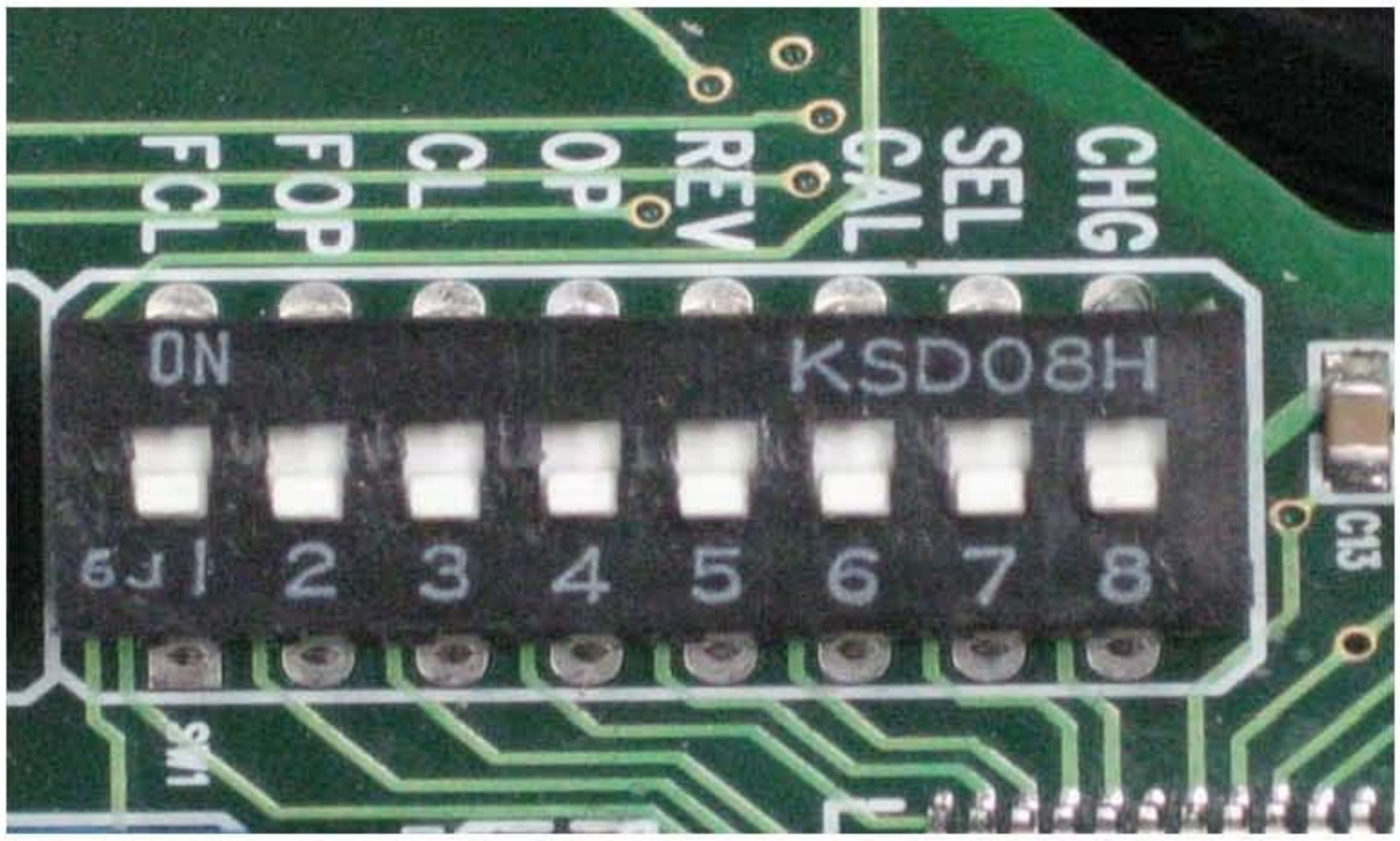

9 – 1. Dip S/W A

NUMBER	NAME	SPEC
1	FCI	Fail close
2	FOP	Fail open
3	CL	Input fully close ex) 5mA fully close Input 5mA Dip s/w on/off
4	OP	Input fully open ex) 19mA fully open Input 19mA Dip s/w on/off
5	REV	Open / Close reverse set
6	CAL	Auto Setting
		After P.I.U or Limit resetting Always required AUTO callibration

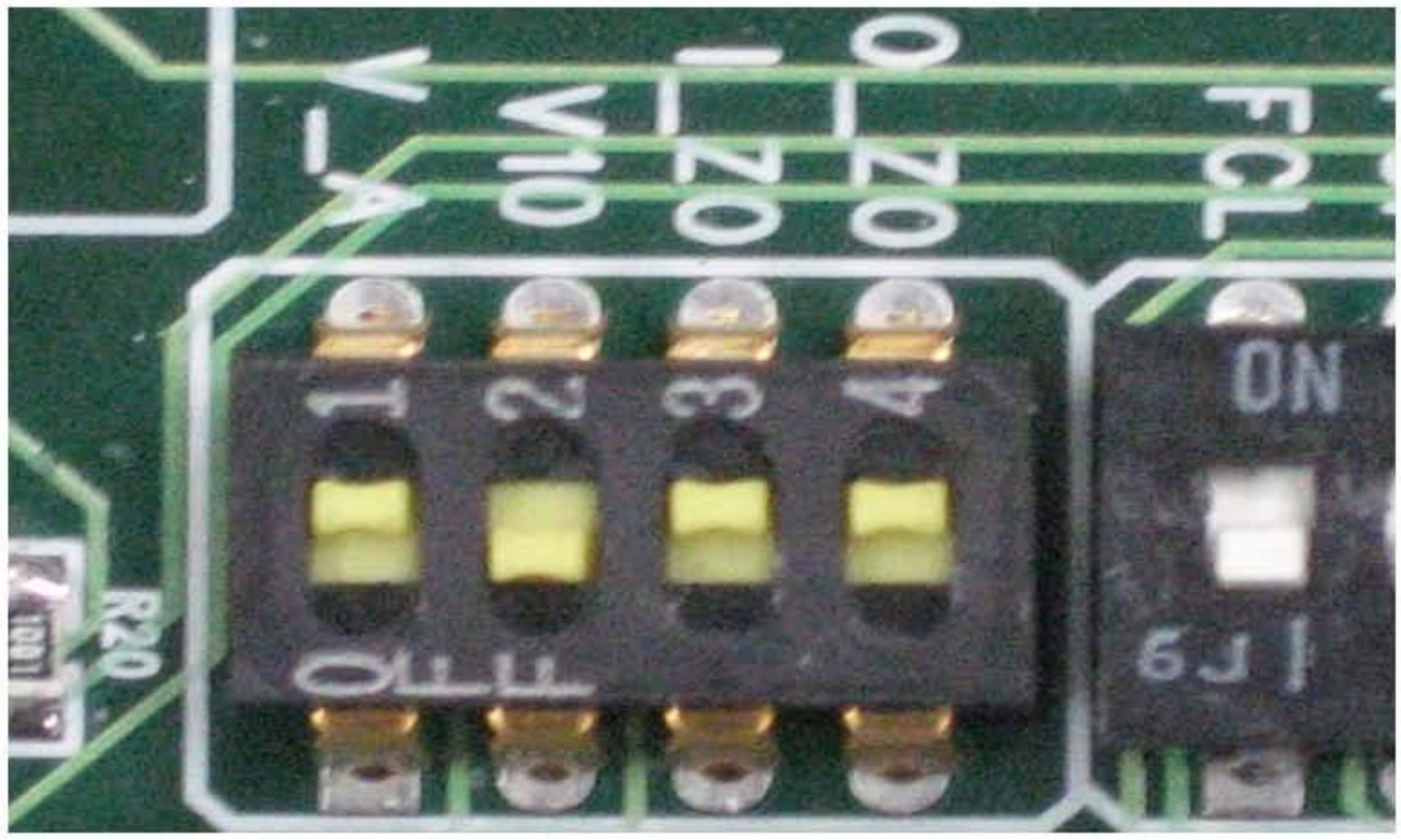

9 – 2. Dip S/W B

NUMBER	NAME	SPEC
1	V_A	OFF : for 0 ~ 10V and 0 ~ 5V input setting ON : for 0 ~ 20mA input setting
2	V10	Input (V) Detail setting OFF : 0 ~ 10V input ON : 0 ~ 5V input
3	1_20	Input Zero input value setting ON : 4 ~ 20mA / 1 ~ 5V / 2 ~ 10V input setting OFF : 0 ~ 20mA / 0 ~ 5V / 0 ~ 10V input setting
4	0_20	Out Zero input value setting ON : 4 ~ 20mA / 1 ~ 5V / 2 ~ 10V output setting OFF : 0 ~ 20mA / 0 ~ 5V / 0 ~ 10V output setting

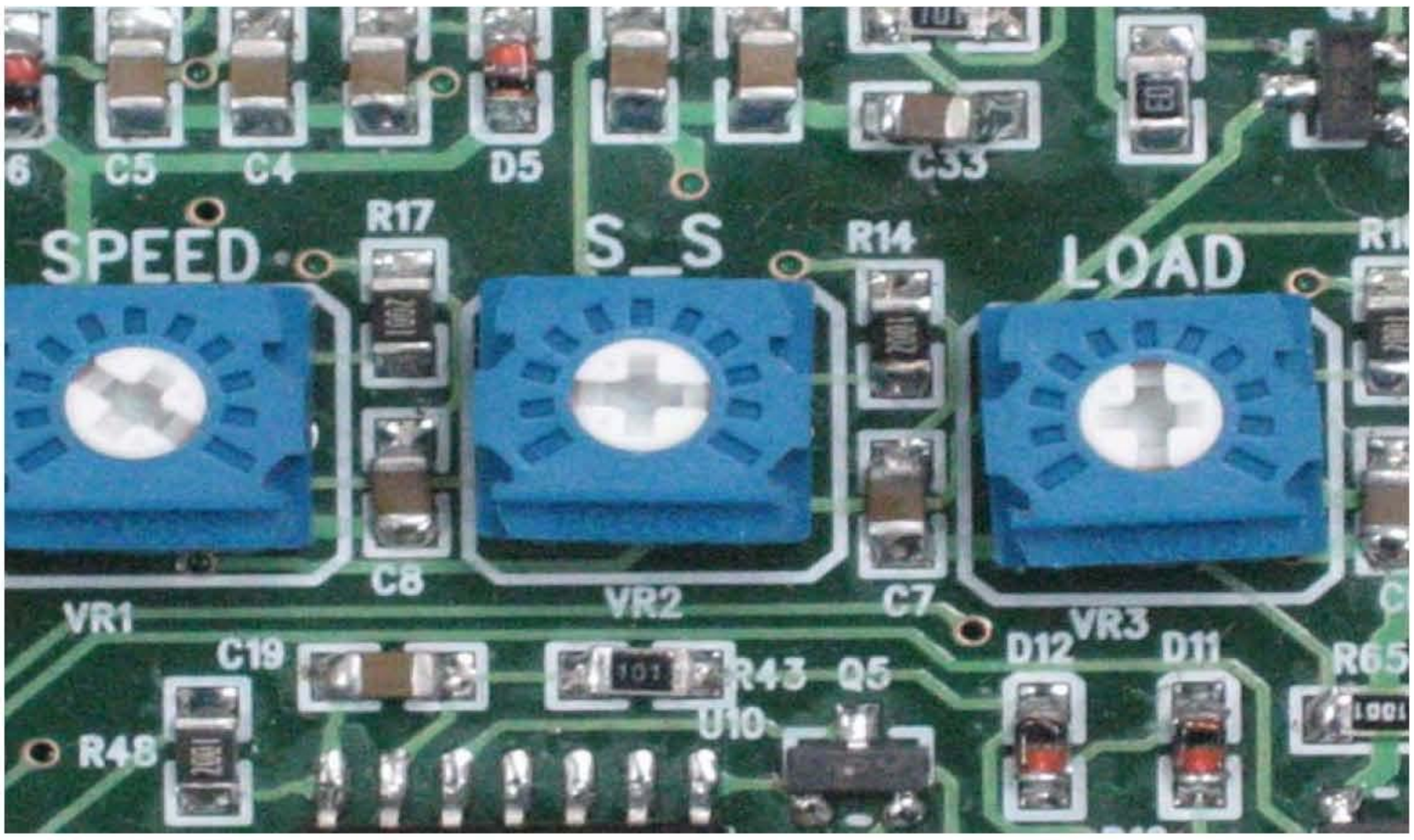

9 – 3. Output Setting

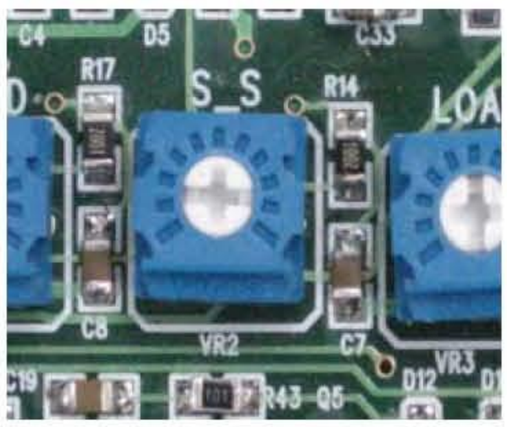

1. S_S : Output 4 ~ 20mA output detail setting

9 – 4. ACTUATOR Torque Setting

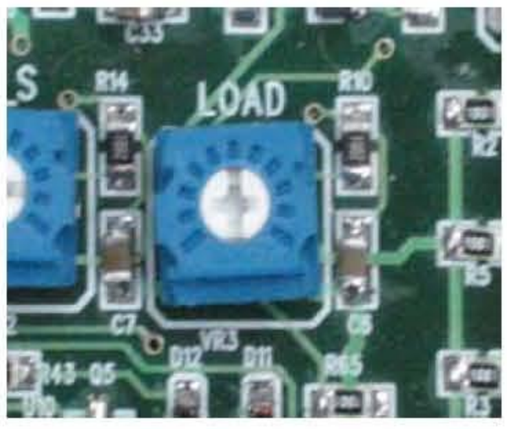

2. LOAD : MOTOR torque setting

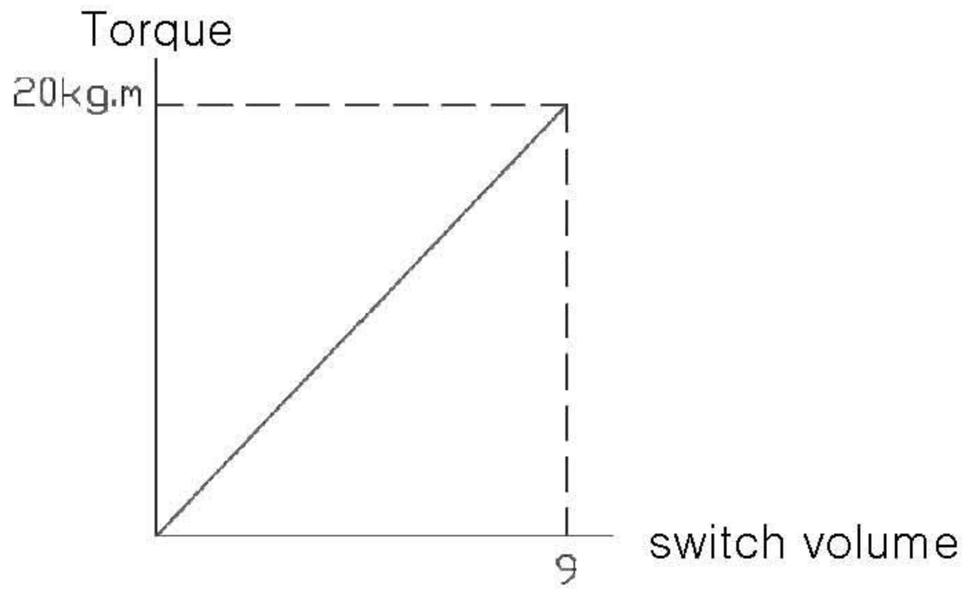

9 – 4. ACTUATOR Speed Setting

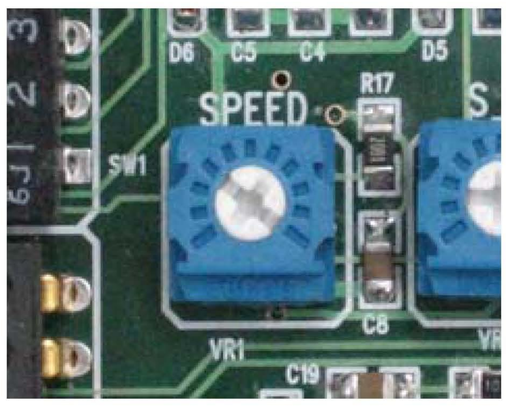

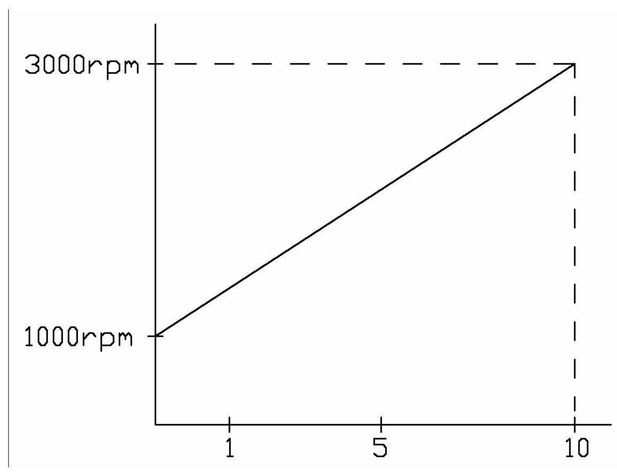

3. SPEED : MOTOR SPEED CONTROL
OPERATING TIME : 30 ~ 70sec

9 – 5. Fuction and LAMP signal

NUMBER	NAME	SPEC
1	ALARM	Over Torque (Volume s/w LOAD) No function after 0.5sec Lamp on rebooting = Torque resetting Power off –> 2sec –> Power on
2	STATE	Flicking furing operation
3	BUSY	Motor woring : on, Motor stop : OFF
4	FAIL	No input signal Lamp on
5	OLS	Full open : on
6	CLS	Full close : on

10. ACTUATOR SETTING ORDER

1. PULLING THE LEVER AND TURN THE HANDWHEEL TOWARD CLOCKWISE TO MAKE VALVE FULL CLOSE POSITION.
2. ACTUATOR & VALVE INTERFACE (ACTUATOR BASE F10,F12)
3. THEN ADJUSTING LOWER CAM TO BE CONTACTED TO CLOSE LIMIT SWITCH, TIGHTEN THE BOLT FOR LIMIT CAM AND FIX.
4. CLOSE STOPPER BOLT SETTING (IT SHOULD BE SET FOR FAIL DIRECTION)
5. POTENTIOMETER SETTING (ACTUATOR FULL CLOSE 80 ~ 120Ω)
6. AS FOR OPEN LIMIT SWITCH SETTING, FOLLOW THE INSTRUCTION OF CLOSE LIMIT SWITCH SETTING.
7. ACTUATOR WIRING
8. TERMINAL NO.1 & 3 : MAIN POWER ON (220V AC)
9. Dip Switch 6 On -> Off : Actuator Callibration (AUTO SCAN)

   -> ACTUATOR OPEN, CLOSE ACTION

   -> ACTUATOR DELIVERED FULL CLOSE AT 85 ~ 120 Ω

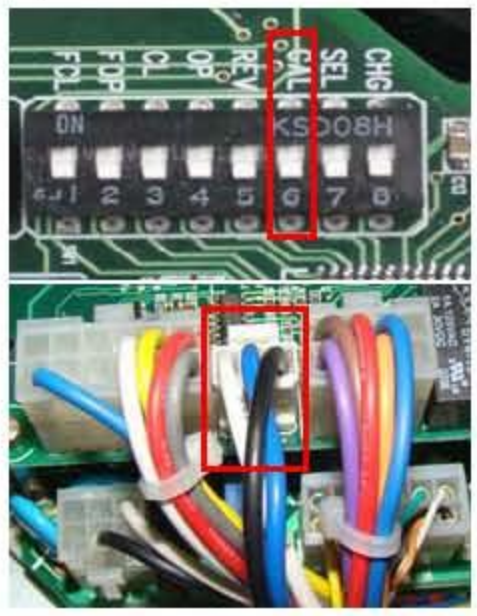

10. ACTUATOR INPUT

10-1. TERMINAL 6 AND 7 : ACTUATOR FULL OPEN

10-2. TERMINAL 6 AND 8 : ACTUATOR FULL CLOSE

10-3. TERMINAL 6 AND 9 : MODULATING

12. CONTROL BOARD SETTING

12-1. ACTUATOR TORQUE SETTING

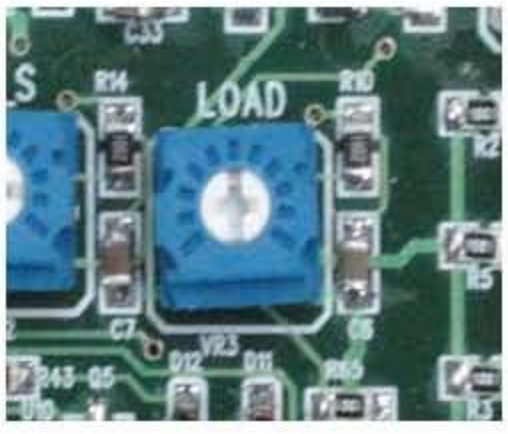

12-2. ACTUATOR SPEED SETTING

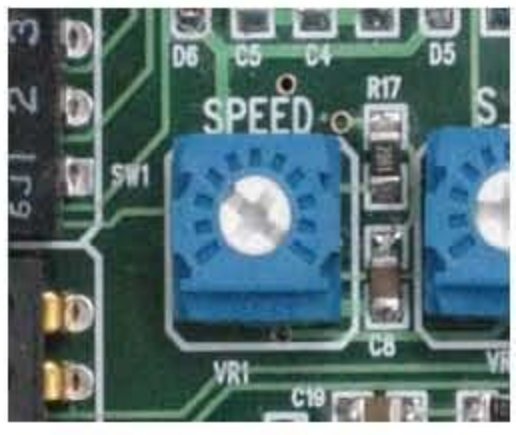

ELECTRIC ACTUATOR

"SR-05, SR-10"

SPRING RETURN ACTUATOR

2009.05.27

1 .PERFORMANCE

Model	Max output torque	Spring Return Time(90°)	Operating time (90°)		Duty(S2)	Motor
	kg.m		50Hz	60Hz		
SR-05	5kg.m	1sec	17 sec	14 sec	15 min	40W
SR-10	10kg.m	1sec	20 sec	17 sec	15 min	60W

Rated Current (A)				Mounting Base (ISO 5211)	Number of Handle turns	Weight(kg)
110VAC	220VAC	380/440VAC	24VDC			
1.6	1	0.4	5	F07	27	
2.3	1.3	0.4		F10	27	

2. STANDARD SPECIFICATION

Enclosure	Explosin Proof & watertight Enclosure Ex d II B T4 IP67
Ambient Temperature	-20℃ ~ 55℃
Power Supply	1Ph 110/230 VAC 50/60Hz 3Ph 380/440 VAC 50/60Hz DC24V
Limit Switch	Open/Close Limit switch (250VAC 16A)
Travel Angle	90° ± 5°
Indicator	Continuous Position indicator
Mechanical Stops	External Adjustable Screws
Space Heater	20W
Conduit Entries	2-PF 3/4"
	Option : 2-M20, 2-NPT 3/4"
Lubrication	Shell ALVIDA EP2
Materials	Aluminium Alloy
Surface Treatment	Anodizing
Coating	Polyester (TGIC - Free)

3. ACTUATOR CONFIGURATION

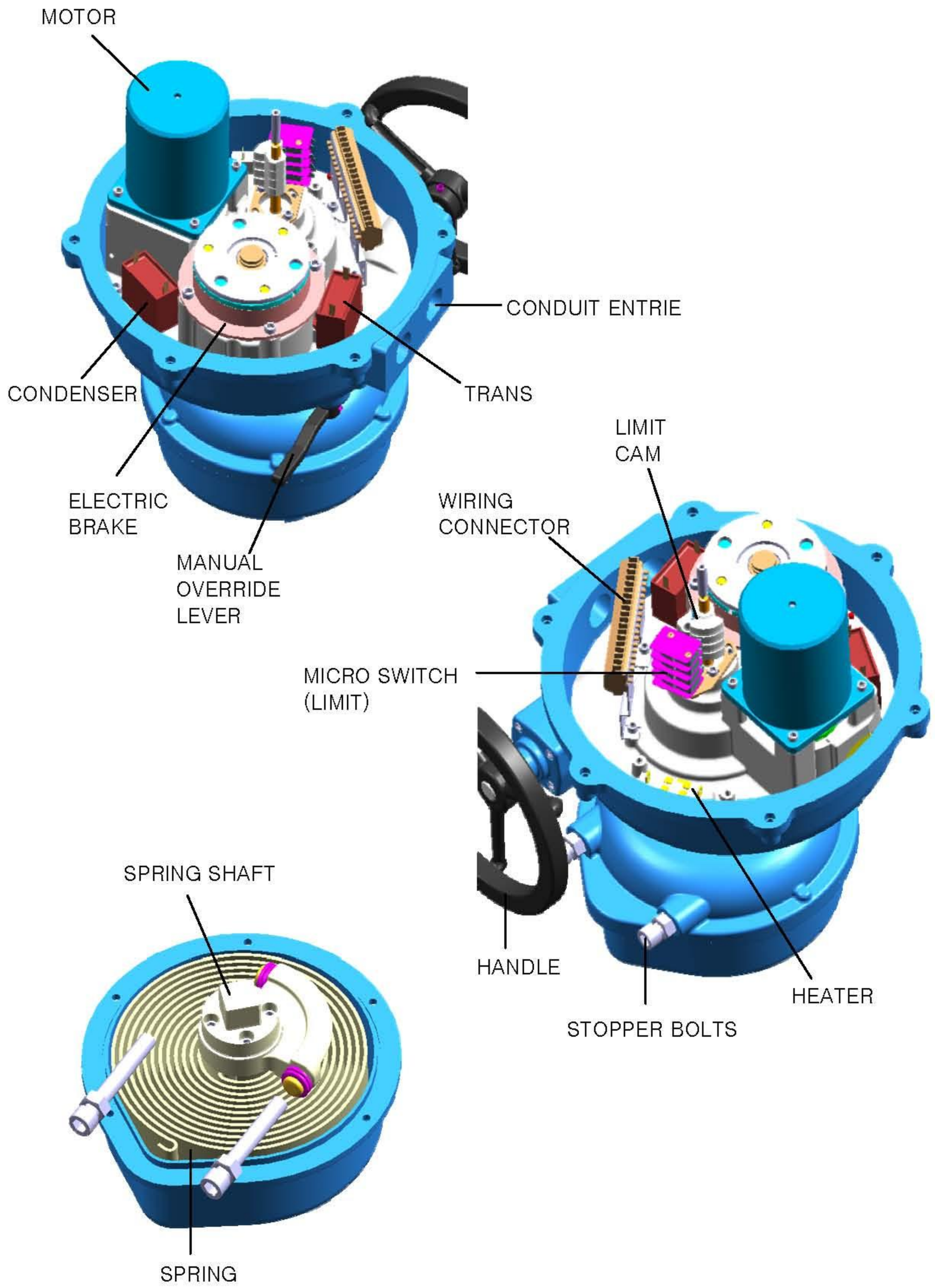

4. DIMENSION

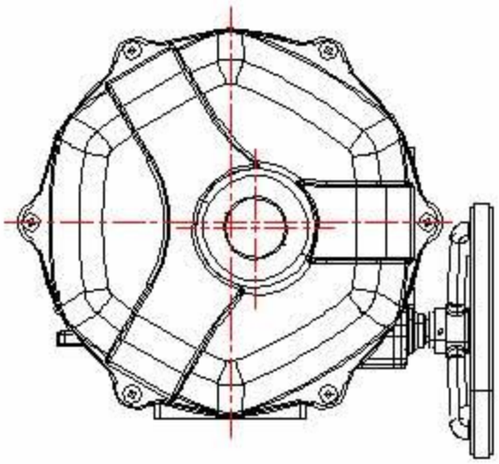

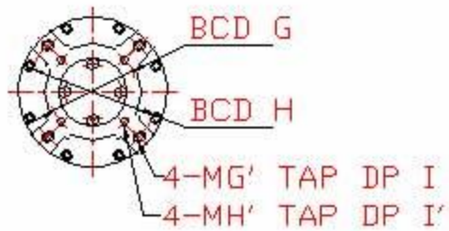

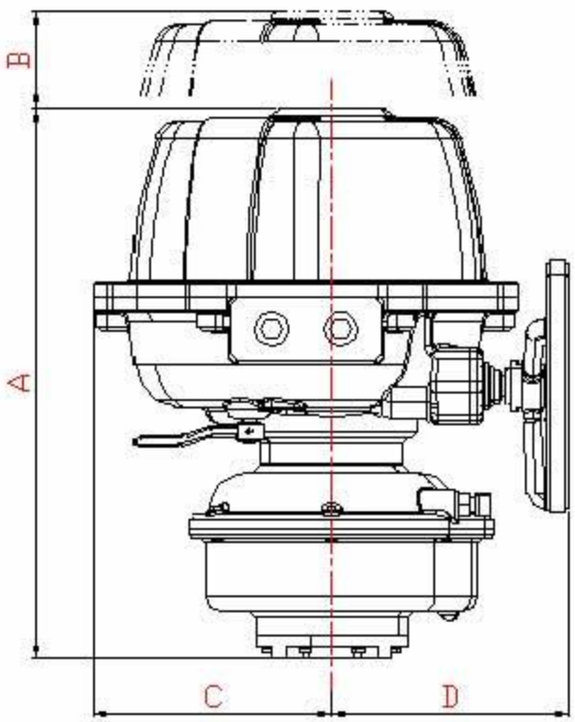

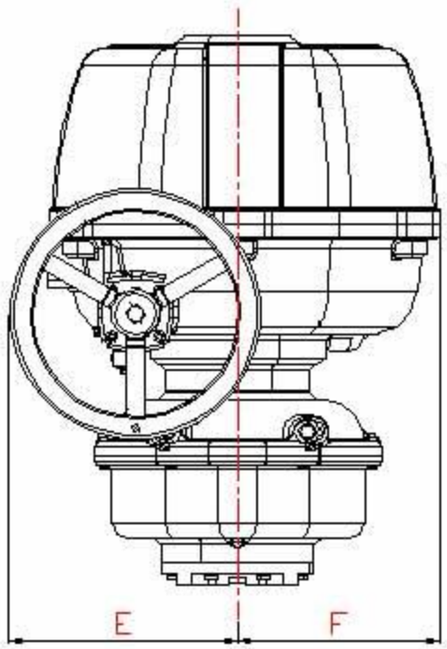

	A	B	C	D	E	F	G	G'	H	H'	I	I'
SR-05	410	135	173	167	172	139	70	M8	-	-	12	-
SR-10	435	150	187	187	180	158	70	M8	102	M10	12	15

5. WIRING

5 - 1. 110 / 230VAC

CLS : CLOSE LIMIT SWITCH (250VAC 6A)
OLS : OPEN LIMIT SWITCH (250VAC 6A)
CTS : CLOSE TORQUE SWITCH (250VAC 6A)
OTS : OPEN TORQUE SWITCH (250VAC 6A)
TP : THERMAL PROTECTOR (250VAC 15A)

	CLOSE	OPEN
CLS 1-2		
CLS 1-3		
OLS 1-2		
OLS 1-3		

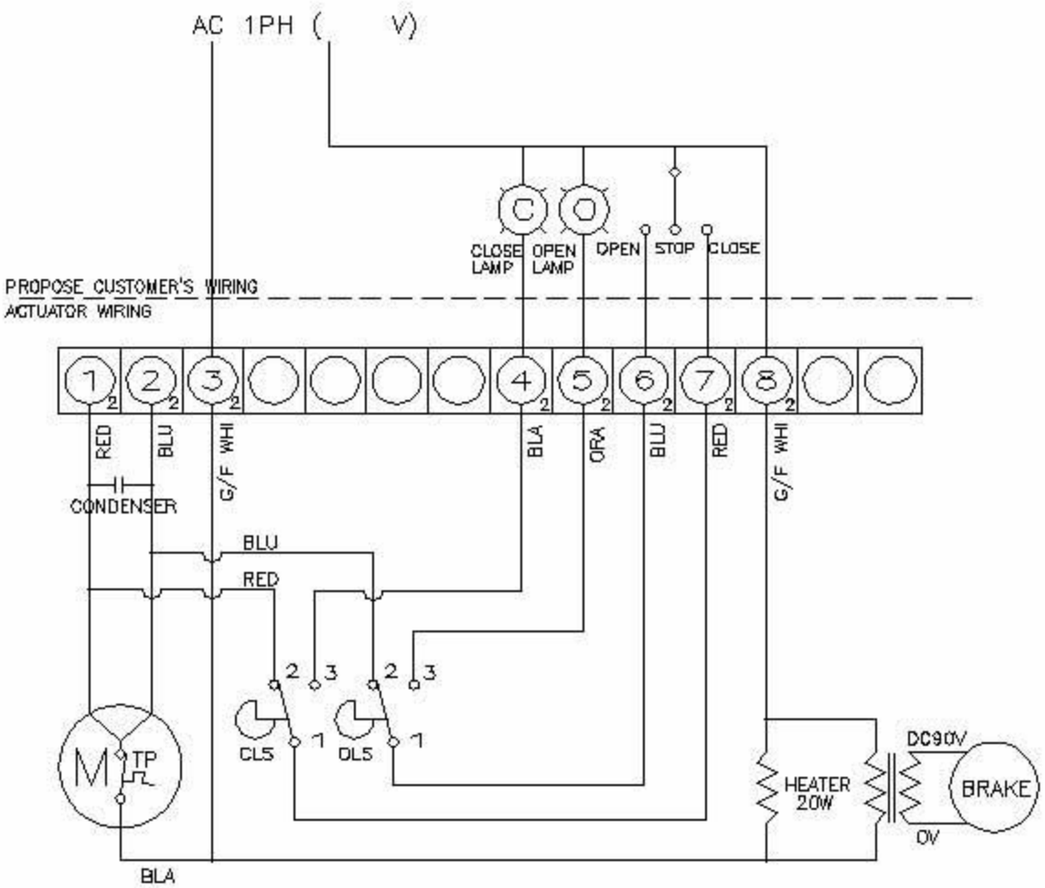

		△					
		SYM	E C N NO	CHANGES	DATE	SIGN	APPD
		DRAW		PART NAME 1PH WIRING DIAGRAM			
SR10	1	CHECK					
SR05	1	APPD					
APPLICATION		DATE '08.10.20		DWG NO. SR05-110-A			

5 - 2. 380 / 440VAC

CLS : CLOSE LIMIT SWITCH (250VAC 6A)
OLS : OPEN LIMIT SWITCH (250VAC 6A)
CTS : CLOSE TORQUE SWITCH (250VAC 6A)
OTS : OPEN TORQUE SWITCH (250VAC 6A)
TP : THERMAL PROTECTOR (250VAC 15A)

	CLOSE	OPEN
CLS 1-2		
CLS 1-3		
OLS 1-2		
OLS 1-3		

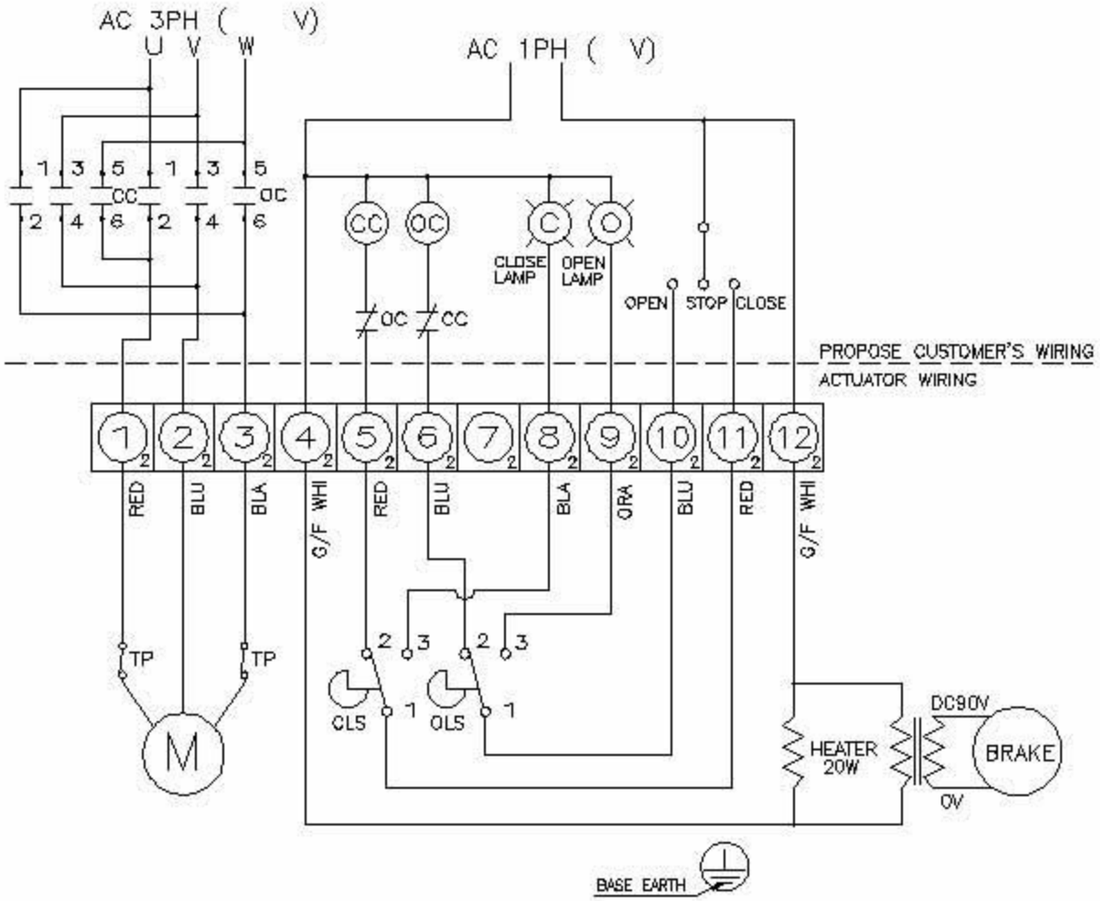

		△					
		SYM	E C N NO	CHANGES	DATE	SIGN	APPD
		DRAW		PART NAME	3PH WIRING DIAGRAM		
SR10	1	CHECK					
SR05	1	APPD		DWG NO.	SR05-310-A		
APPLICATION		DATE '08.10.20					

Installation and Operation

EL Series Electric Actuator

El-O-matic Electric Actuators.....

El-o-matic electric actuators are the most advanced actuators of their type on the market today, this achievement is due to many years of improvement and development. Basic actuators provide all the features normally required for modern plant automation and a wide range of control options are available to tailor actuators to individual applications.

The basic operation of El-o-matic valve actuators is the same for all sizes. Models EL20 through EL2500 feature a disengageable manual override. Torque switches are standard on models EL100 - EL2500. A double reduction worm/worm gear system is utilized on models EL20 to EL150. The EL200 through EL2500 utilize an extra spur gear reduction on the motor shaft.

Where to Find Information

	Page
Installation Tips	2
Parts and Materials	
- EL20	4
- EL55	6
- EL100/150	8
- EL200/350	10
- EL500/800	12
- EL1200/1600	14
- EL2500	16
Installation, Setting and Calibration	
- Mechanical Limit Stop Setting	18
- Limit Switch Setting	19
- Potentiometer	20
- Speed Controller	21
- Position Transmitter, 2 Wire	22
- Position Transmitter, 4 Wire	24
- Positioner	26
- Plug and Socket	29
- Local Control Station	31
Disassembly and Re-assembly	33
Trouble Shooting	34
Wiring Diagrams	35
- Index	35
- Basic Actuators	36
- Kit Options	38
Notes and Up-dates	42
Dimensions and Performance data	43

Installation

CAUTION

Do not attempt to store, install, or operate your El-O-Matic EL actuator without taking account of the following;

ELECTRICAL WIRING

The control circuitry feeding the actuator must not allow power to be supplied to both “open” and “close” motor windings at the same instance in time. For example, when power is applied to the “open” terminal, the “close” terminal must be isolated from the power supply and vice versa. Failure to do so will result in the motor overheating.

If several actuators are controlled from a common control switch, which has only a D.P.D.T. type electrical contact on it, then the result can be that the actuators will run in different directions.

For example: An open/stop/close switch with only D.P.D.T. contacts on it controls three actuators. When the switch is turned to the open control position, all three actuators will start to run open. If any one of the three actuators reaches its open position before the other two it can receive power via the common D.P.D.T. contacts and the other actuators close motor winding, resulting in that actuator running closed.

When several actuators are required to be controlled in parallel with one 3-position switch, that switch must have separate contacts for each actuator being controlled.

Also:

1. Use wire with proper gauge and insulation. (follow standards prescribed by the relevant electrical code)
2. Actuator chassis must be correctly grounded.
3. Use appropriate conduit or cable glands for weather proof or explosion proof applications.
4. Follow the wiring diagram to ensure proper connection of power and control voltage to the actuator.
5. Make all splices or connections using the correct pin connector or terminal strip.
6. Always connect anti condensation heater.

STORAGE

Warehouse Storage

1. Actuators should be stored in a clean, dry warehouse free from excessive vibration and rapid temperature change.
2. Actuators should not be stored on any floor surface.
3. In areas of high humidity the actuator should have a packet of desiccant placed in the motor compartment. (this will absorb excessive moisture)

On Site Storage

1. Actuators should be stored in a clean, dry location free from excessive vibration and rapid temperature change.
2. Ensure all actuator covers are in place and securely fastened.
3. If power is not available, place a packet of desiccant in the motor compartment. (replace cover and securely fasten)
4. Replace plastic conduit plugs with appropriate pipe plugs.

Failure to follow proper storage guidelines will void warranty.

DO

1. Keep motor compartment clean and dry.
2. When applicable connect the compartment heater. (not fitted on EL20)
3. Check unit wiring and ensure it coincides with the proper wiring diagram.
4. Power supply should be free from excessive voltage transients (spikes).
5. Control lines should be shielded properly.
6. CAUTION: Shut off incoming power before installing or repairing any electrical device.
7. Check motor nameplate to be certain that the actuator voltage is the same as your incoming voltage.
8. Schedule a periodic maintenance check of all El-O-Matic actuators to prolong life and ensure proper performance. (we suggest check for correct opening and closing once a month)
9. Set open and close limit switches manually, in accordance with instructions. (see page 19)
10. Be sure and lubricate unit during reassembly. (see LUBRICATION)
11. Check limit switch setting prior to motor operation if the actuator has been repaired or disassembled.

DON’T.

1. CAUTION: Do not attempt to install or repair any electric device without shutting off incoming power.
2. Do not operate valve without first setting limit switches and checking direction of motor rotation.
3. Release torque before disassembling gear train components or the actuator from the valve.
4. Do not adjust torque switch settings. (these are factory set and need no adjustment)
5. Do not use a cheater or extension bar on the handwheel. (this could result in damage to the valve assembly or cause physical injury)
6. Do not alternately start and stop motor to seat or un-seat a valve. If properly sized, the running torque of the actuator should seat the valve in normal operation.

LUBRICATION

El-O-Matic utilizes a totally sealed and permanently lubricated gear case. The actuator can be mounted in any position. It is not unusual to find a very small amount of lubricant weeping around shaft seals. This situation can occur during long periods of storage. This lubrication will not affect operation and should simply be wiped up with a clean cloth. Once equipment has begun operating, this weeping should disappear.

The actuator gearbox is filled with FINA CERAN M (MO S_2). This standard lubricant has been proven extremely reliable. Should the gearbox be disassembled, repack with EP370 or any good quality mineral based gear grease.

ie. DROPPING POINT: > 300 °C.
BASE: Calcium Sulphate.
CLASSIFICATION :NLGI Class 1.

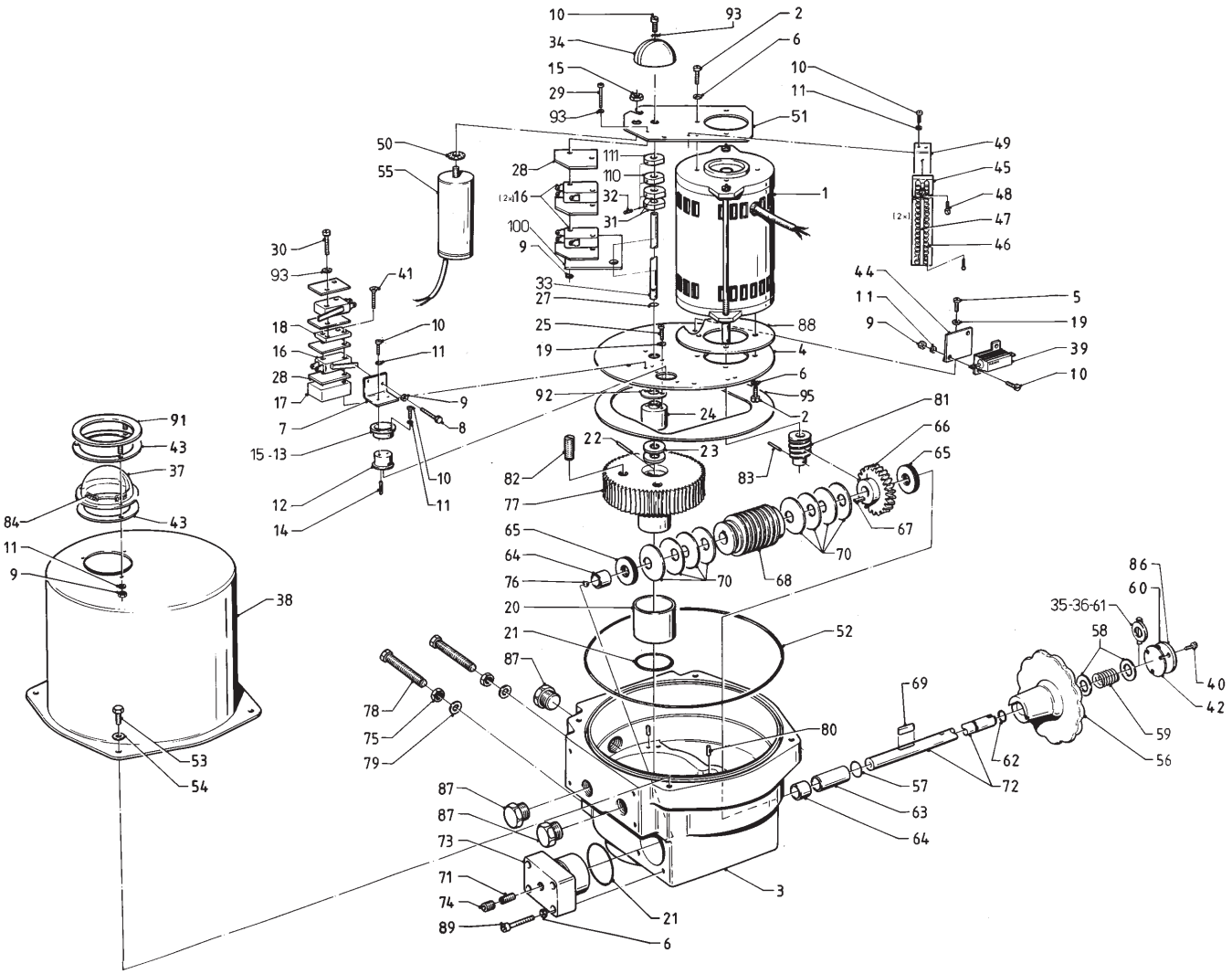
10
93
2
34
6
15
10
29
11
93
51
50
111
49
55
28
110
45
(2×)16
32
1
48
31
(2×)
47
100
46
30
9
93
41
33
44
27
5
11
25
88
19
9
19
18
10
39
16
11
19
4
28
6
10
17
9
92
95
81
91
7
8
24
2
66
43
15-13
22
23
65
37
10
82
83
12
11
77
84
43
14
67
65
70
11
64
70
68
86
9
76
60
38
20
35-36-61
21
52
58
87
69
40
78
42
75
80
59
79
62
56
53
54
57
72
87
63
87
64
73
71
3
74
21
89
6

PC.NO.	QTY.	DESCRIPTION.	MATERIAL.
1	1	Motor	
2	7	Screw	
3	1	Housing	Aluminium
4	1	Motor Support Plate	Steel
5	7	Screw	
6	11	Lock Washer	
7	1	Torque Switch Bracket	Steel
8	2	Screw	
9	9	Nut	
10	11	Screw	
11	13	Lock Washer	
12	1	Torque Switch Collar	
13	1	Torque Switch Bush Bearing	Brass
14	1	Dowel Pin	
15	1	T.S. Gasket	
16	6	Micro Switch	
17	1	Torque Switch Spacer	
18	1	Adaptor	
19	9	Lock Washer	
20	1	Drive Sleeve Bearing	Steel
21	2	O-Ring	Buna
22	1	Pin Spiral	
23	2	Top Spring	
24	1	Top Bearing	Steel
25	2	Screw	
28	9	Insulation Plate	
29	2	Screw	
30	4	Screw	
31	2	Limit Switch Cam	Aluminium
32	4	Screw	
33	1	Indicator Shaft	Steel
34	1	Dial	
35	1	Shimring	
36	1	Retaining Ring	
37	1	Window	Lexan
38	1	Cover	Steel
39	1	Heater	
40	3	Screw	
41	2	Screw	
42	1	Handwheel gasket	
43	2	Window gasket	
44	1	Heater Bracket	
45	2	Terminal Block	
46	2	Marking Tag	
47	2	Sticker Terminal No’s	
48	4	Screw	
49	2	Terminal Bracket	
50	1	Lock Washer	
51	1	Limit Switch Bracket	Steel
52	1	O-Ring	Buna
53	4	Screw	
54	4	Lock Washer	
55	1	Capacitor	
56	1	Handwheel	Aluminium
57	1	O-ring	Buna
58	1	Washer	
59	1	Spring	
60	1	Handwheel Cover	
61	1	Clutch Ring	Steel
62	1	O-Ring	Buna
63	1	Handwheel Bearing	Bronze
64	2	Worm Bearing	Bronze
65	2	Thrust Bearing	Steel
66	1	Wormwheel	Bronze

PC.NO.	QTY.	DESCRIPTION.	MATERIAL.
67	1	Key	Steel
68	1	Worm	Steel
69	1	Key	
70	8	Torque Spring	
71	1	Screw	Steel
72	1	Worm Shaft	Steel
73	1	Wormcap	Aluminium
74	1	Screw	
75	3	Nut	
76	1	Ball	Steel
77a	1	Drive Sleeve (EL-100)	Cast Iron
77b	1	Drive Sleeve (EL-150)	Bronze
78	2	Screw	
79	2	Plain Washer	
80	2	Dowel Pin	
81	1	Worm	Steel
82	2	Slotted set screw	
83	1	Pin Spiral	Steel
84	1	Window Sticker	
86	1	Sticker Open/Closed	
87	3	Blindstop	
88	1	Motor Gasket	
89	4	Screw	
91	1	Window Holder	
92	1	Topbearing gasket	
93	6	Tooth Washer	
94	1	Retaining Ring	
95	1	Motor support plate gasket	
100	1	Support Plate Switch	Steel
110	1	Limitswitch Cam Green	Aluminium
111	1	Limitswitch Cam Red	Aluminium

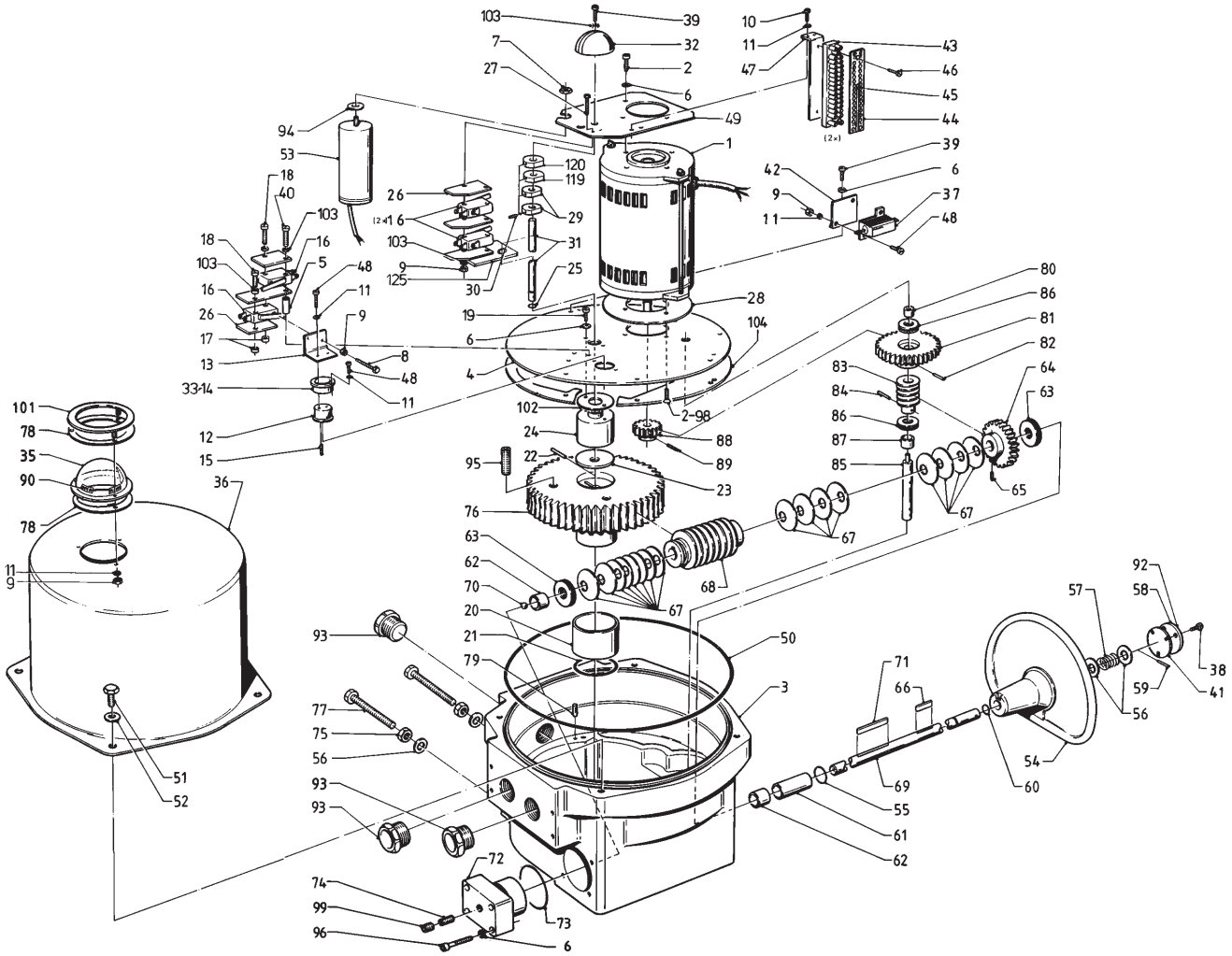
103
39
10
7
32
11
43
27
2
47
46
6
45
49
44
94
1
39
53
120
42
6
18
119
40
26
9
37
103
29
11
48
16
103
31
18
5
48
9
25
103
125
30
16
11
80
28
26
9
86
19
81
17
6
104
82
13
8
83
64
48
4
84
63
33-14
11
86
101
102
2-98
87
78
12
24
88
85
35
15
22
89
95
23
65
90
36
76
67
67
78
63
62
68
11
9
70
67
20
92
57
58
93
21
50
79
71
38
66
3
59
77
41
75
56
56
54
51
93
69
60
52
93
55
61
72
62
74
99
73
96
6

PC.NO.	QTY.	DESCRIPTION.	MATERIAL.
1	1	Motor	
2	5	Screw	
3	1	Housing	Aluminium
4	1	Motor Support Plate	Steel
5	1	T.Sw. Spacer	Steel
6	8	Lock Washer	
7	1	Hexnut	Steel
8	2	Screw	
9	3	Nut	
10	4	Screw	Steel
11	13	Lock Washer	
12	1	Torque Switch Collar	Aluminium
13	1	Torque Switch Bracket	Steel
14	1	Torque Switch Bearing	Brass
15	1	Dowel Pin	
16	6	Micro Switch	
17	2	Torque Switch Spacer	
18	2	Screw	
19	2	Screw	Steel
20	1	Drive Sleeve Bearing	Steel
21	1	O-Ring	Buna
22	1	Pin Spiral	Steel
23	1	Top Spring	
24	1	Top Bearing	Steel
25	1	O-Ring	Buna
26	9	Insulation plate	
27	2	Screw	
28	1	Motor Gasket	
29	2	Limit Switch cam	Aluminium
30	4	Screw	
31	1	Indicator Shaft	Steel
32	1	Dial	
33	1	Gasket T.S.	
34	1	Screw	
35	1	Window	Lexan
36	1	Cover	Steel
37	1	Heater	
38	3	Screw	
39	6	Screw	
40	1	Screw	Steel
41	1	Handwheel gasket	
42	1	Heater Bracket	Steel
43	2	Terminal Block	
44	2	Marking Tag	
45	2	Terminal Sticker	
46	4	Screw	
47	2	Terminal Bracket	Steel
48	6	Screw	
49	1	Limit Switch Bracket	Steel
50	1	O-Ring	Buna
51	4	Screw	
52	4	Lock Washer	
53	1	Capacitor	
54	1	Handwheel	Aluminium
55	2	O-Ring	Buna
56	4	Washer	
57	1	Handwheel Spring	steel
58	1	Handwheel Cover	
59	1	Pin Spiral	
60	1	O-Ring	Buna
61	1	Handwheel Bearing	Bronze
62	2	Worm Bearing	Bronze
63	2	Thrust Bearing	Steel
64	1	Worm Wheel	Bronze
65	1	Screw	
66	1	Key	
67	16	Torque Spring	
68	1	Worm	Steel
69	1	Worm Shaft	Steel
70	1	Ball	Steel
71	1	key	
72	1	Worm Cap	Aluminium
73	1	O-Ring	Buna
74	1	Screw	
75	2	Nut	
76 a	1	Drive Sleeve (EL-200)	Cast iron
76 b		Drive Sleeve (EL-350)	Bronze
77	2	Screw	
78	2	Window gasket	
79	2	Dowel Pin	
80	1	Bearing	Bronze
81	1	Worm Shaft Gear	Steel
82	1	Pin Spiral	Steel
83	1	Worm	Steel
84	1	Pin Spiral	Steel
85	1	Worm Shaft	Steel
86	2	Thrust Bearing	Steel
87	1	Bearing	Bronze
88	1	Motor Pinion	Steel
89	1	Pin Spiral	
90	1	Window Sticker	
92	1	Sticker Open/Closed	
93	3	Blindstop	
94	1	Washer	Steel
95	2	Screw	
96	4	Screw	
98	1	Screw	Steel
99	1	Screw	
100	3	Screw	
101	1	Window holder	Steel
102	1	Topbearing gasket	
103	7	Toothwasher	
104	1	Motor support plate gasket	
119	1	Limitswitch Cam Green	Aluminium
120	1	Limitswitch Cam Red	Aluminium
125	1	Support Plate Switch	Steel

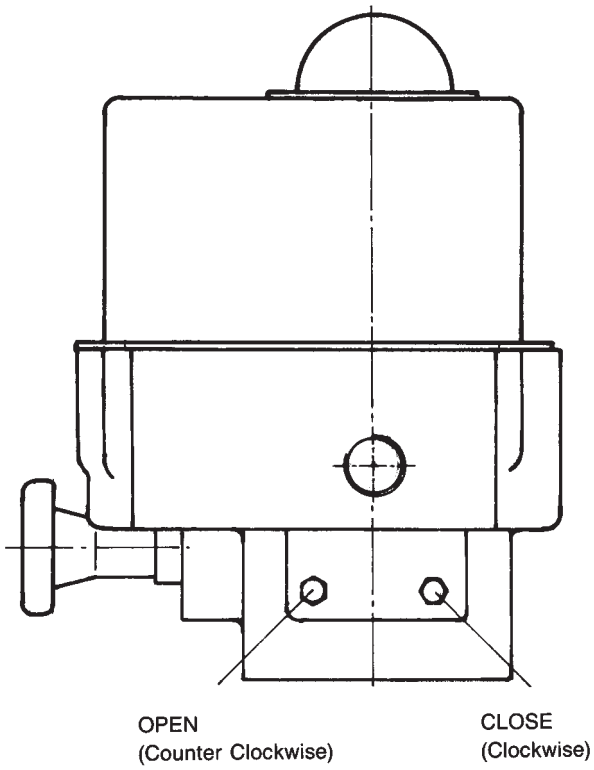

fig. 2a.

Location of Limit Stops

All EI-series electric actuators are equipped with a manual override feature and a Stroke Adjustment System. The purpose of this system is to limit the stroke of the valve while under manual control.

On torque switch equipped actuators the limit stops may be used to provide a greater degree of stroke precision than by limit switches. ie. for high performance butterfly valves.

After the actuator has been fitted on a valve and the end of travel limit switches have been set, the mechanical stops can be set as follows:

Before beginning please note:

Important.

♦♦ For torque seated applications the mechanical stops do not need setting in the positions that torque seating is required and the stop screws should be backed off approx. 2 turns from the fully closed or open position. This to prevent the torque switch from tripping on the stop screws and not on the valve seat.

Procedure

1. With actuator mounted to a valve, electrically or manually move the valve away from the fully open position.
2. Turn the open stop screw out (ccw) 4 turns.
3. Manually operate the actuator to the full open position.
4. Now turn the open stop screw in (cw) until an obstruction is felt (do not force) then backoff 1/2 turn and lock the stop screw with the locknut.
5. Follow the same procedure at the closed end of travel and adjust the ''close'' stop screw the same way.

Set mechanical stops before setting limit switches. The end of travel limit switches have been factory set for approximately 90° of valve travel. They will however coincide with the exact end of valve travel positions.

The switches should be adjusted after the actuator is installed on the valve and after the mechanical stops have been set.
The switches and their operating cams are located under the limit switch bracket which is fixed to the top of the motor.

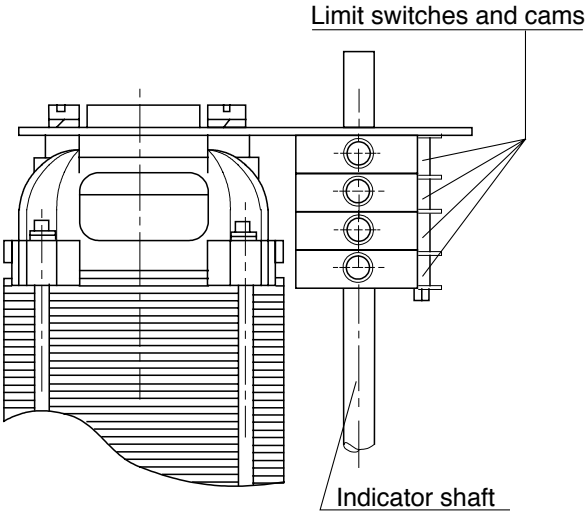

fig. 1a. Location of Limit Switches

Before beginning please note:

Important

♦♦ The motor is de-energized once the flatted side of the cam is in contact with the limit switch actuator arm, and the switch is no longer depressed.

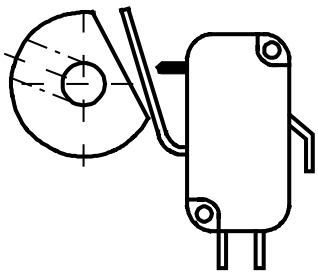

fig. 1b. Switch Break Position

Also

♦♦ Capacitor may be removed from the limit switch bracket for better access.

♦♦ For more precise setting you can leave the allen wrench in the cam during setting procedure.

Procedure

1. Remove actuator cover.
2. The limit switches are marked “1” for close and “2’ for open.

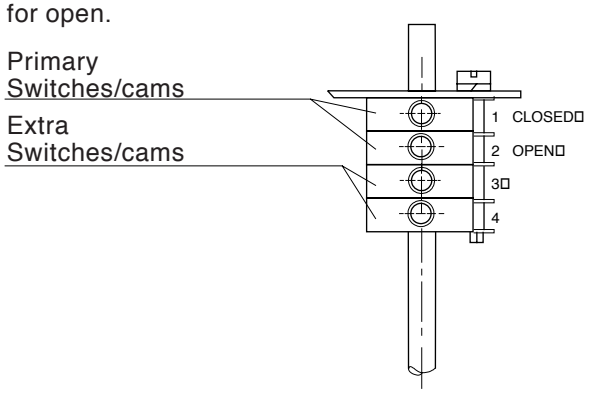

fig. 1c. Switch Functions.

CCW (Open) switch setting

3. Manually or electrically rotate actuator/valve to the desired position.
4. **REMOVE ELECTRICAL POWER.**
5. Using a 2mm allen wrench loosen set screw on cam.
6. Rotate green cam until switch lever arm rides on the curved portion of the cam. (fig 1d).

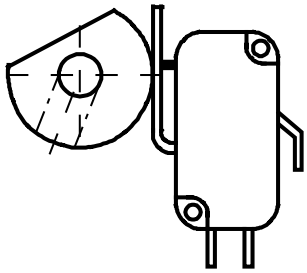

fig. 1d. Initial Position

7. Rotate cam counter-clockwise until the switch trips. This can be detected by a slight audible “click”, or use a battery powered test light across terminal 8 and 10.
8. Tighten set screws.
9. Electrically cycle the actuator to check switch setting.

CW (Close) limit switch setting

10. Manually or electrically rotate actuator/valve to the desired position.
11. **REMOVE ELECTRICAL POWER.**
12. Using a 2mm allen wrench loosen set screw on cam.
13. Rotate red cam until switch lever arm rides on the curved portion of the cam (fig 1d).
14. Rotate cam clockwise until the switch trips. This can be detected by a slight audible “click”, or use a battery powered test light across terminal 5 and 7.
15. Tighten set screws.
16. Electrically cycle the actuator to check switch settings.

The potentiometer itself is fixed on the limit switch bracket and is driven by a pair of gears from the indicator shaft.

Before starting check "POT" kit to ensure that all parts are available.
Always verify if potentiometer value suits your requirement prior to mounting in actuator.

Pc.Nr.	Qty	Description
3	1	Drive pinion (large).
4	1	Potentiometer pinion (small).
5	1	Potentiometer spacer.
6	1	Potentiometer.

Procedure

1. Remove actuator cover (1).
2. Remove dial (2).

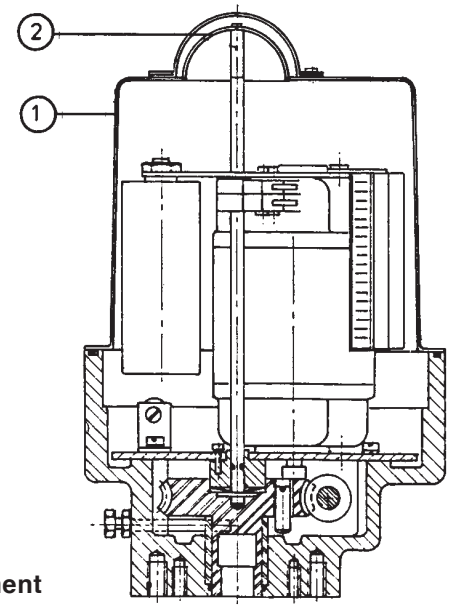

Fig. 1.
General Arangement

3. Mount potentiometer (6) on limit switch bracket using nut and spacer (5).
4. Slide potentiometer pinion (4) (small) onto pot. shaft and tighten screw.
5. Slide drive pinion (3) (large) over indicator shaft.
6. Ensure that end of travel limit switches have been set correctly and actuator is in mid position.
   Turn potentiometer shaft in mid position and tighten drive pinion screw onto the indicator shaft (do not overtighten).

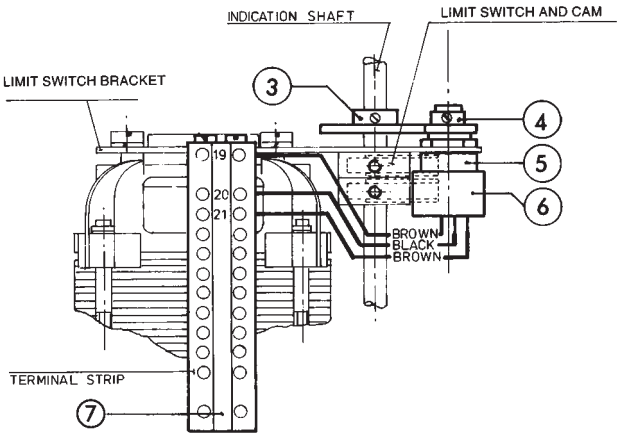

Fig. 2. Potentiometer detail

7. Replace dial (1) and align in the proper position. Replace actuator cover and fasten bolts securely taking care that the "O" ring is properly located in the "O" ring groove.

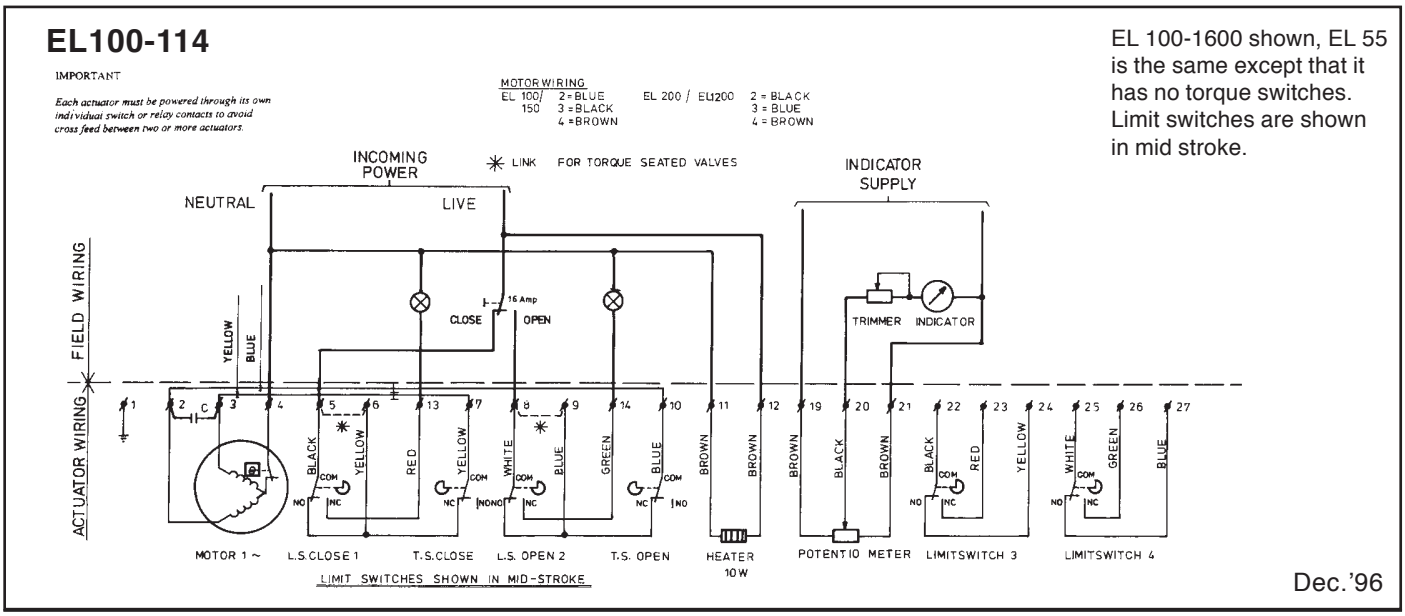

EL 100-1600 shown, EL 55 is the same except that it has no torque switches. Limit switches are shown in mid stroke.

Dec.'96

The speed controller board is fixed on the limit switch bracket on top of the motor.

Before starting check the kit to ensure that all parts are available and the speed controller card voltage is the same as the actuator voltage.

There are two versions : 110 - 250V AC
: 24V DC

Pc.Nr.	Qty	Description	Used on
9	3	Print spacer	EL 55
9	3	Spacer	EL 100 -1600
10	1	Speed controller board	EL 55 -1600

Procedure

1. Remove actuator cover (1).
2. Remove dial (2).

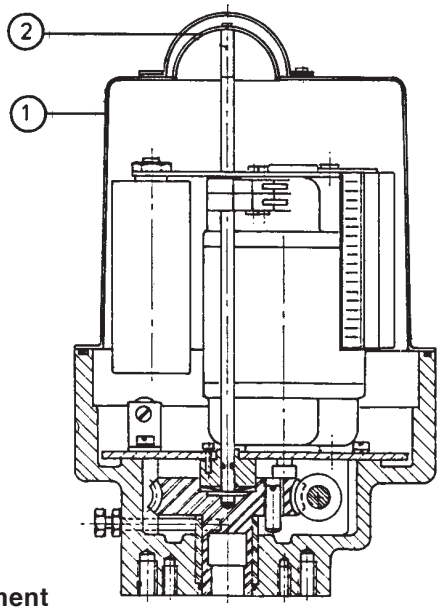

Fig. 1.
General Arangement

3a. For EL 55.
Insert three spacers (9) into the limit switch bracket and place speed control board so that the spacers locate correctly in the three holes in the circuit board. Press firmly into place.

3b. For EL 100 through 800 only.
Mount speed control board on limit switch bracket using 3 screws and 3 plastic spacers (the screws engage with 3 nuts welded to top motor plate).

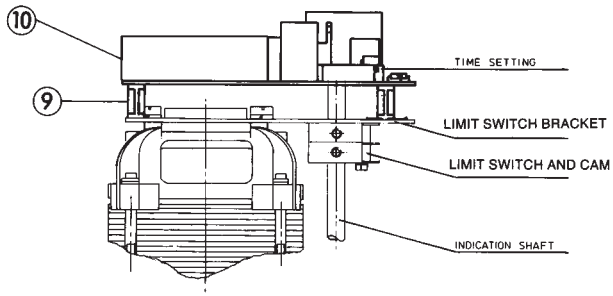

Fig. 2. Speed controller detail

4. Connect speed control terminal 40 (brown) to terminal 12.
5. Remove violet motor lead from terminal 4 and crimp to the violet wire connected to terminal 4a on the speed control board.
Then connect the violet wire connected to terminal 4 on the speed control board to terminal 4 on the main actuator terminal strip.
6. Connect power supply to the actuator. This must be the correct voltage as shown on the actuator name plate.
7. Pre-set pot “Speed Adjustment Control” fully CW (fastest) and operate actuator to verify correct operation. “Speed Adjustment Control” may now be adjusted CCW to achieve desired operating time.
8. Replace dial (1). Replace actuator cover and fasten bolts securely taking care that the “O” ring is properly located in the “O” ring groove.

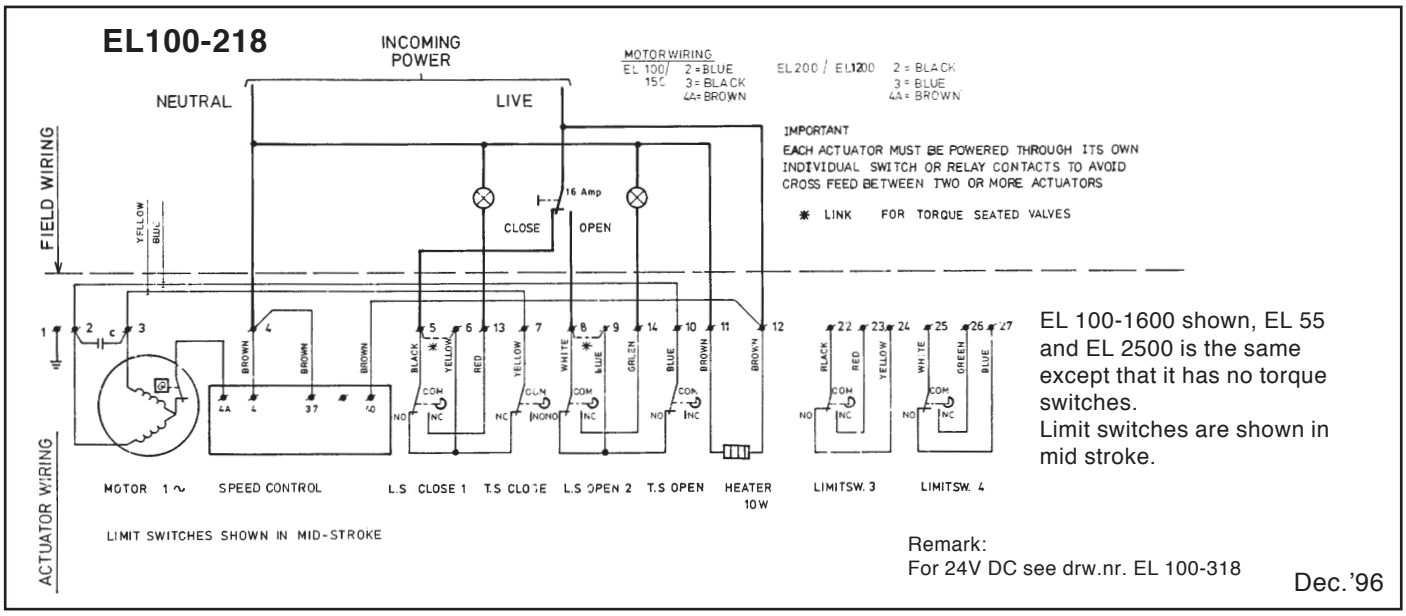

EL 100-1600 shown, EL 55 and EL 2500 is the same except that it has no torque switches.
Limit switches are shown in mid stroke.

Remark:
For 24V DC see drw.nr. EL 100-318

Dec.’96

The position transmitter card is fixed on top of the limit switch bracket with the potentiometer fixed to the bracket itself, the drive for this is by a pair of gears from the indicator shaft.

Before starting check "PT2" kit to ensure that all parts are available.

Pc.Nr.	Qty	Description	Used on
3	1	Drive pinion (large).	EL 55 - EL 2500
4	1	Pinion (small).	EL 55 - EL 2500
5	1	Potentiometer spacer.	EL 55 - EL 2500
6	1	Potentiometer	EL 55 - EL 2500
9	3	Print spacer	EL 55 - EL 2500
9	3	Print spacer and screw	EL 100 - EL 1600
16	1	Position transmittercard	EL 55 - EL 2500

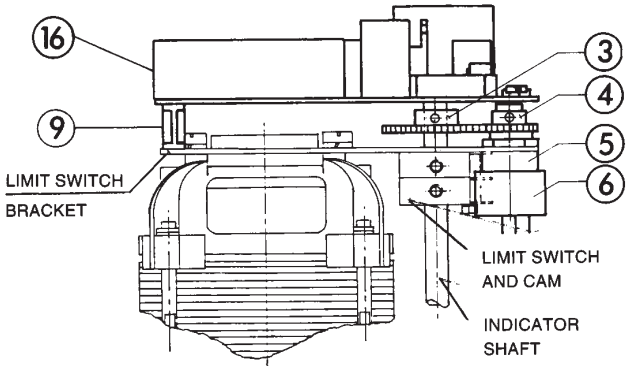

Fig. 2. Position Transmitter Detail

Installation Procedure

1. Remove actuator cover (1).
2. Remove dial (2).

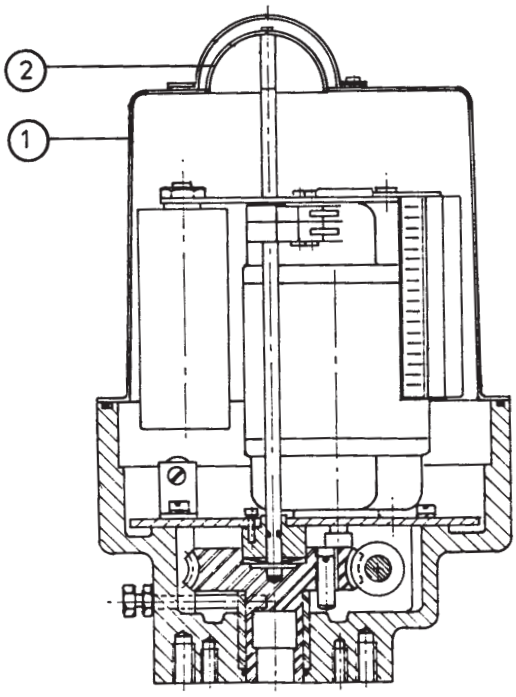

Fig. 1.
General Arangement

3. Mount potentiometer (6) on limit switch bracket using nut and spacer (5).

4. Slide potentiometer pinion (4) (small) onto pot. shaft and tighten screw. (Do not overtighten)

5. Slide drive pinion (3) (large) onto indicator shaft.

6. Ensure that end of travel limit switches have been set correctly and actuator is in mid position. Turn potentiometer shaft in mid position and tighten drive pinion screw onto the indicator shaft (do not overtighten).

7a. For EL-55.
Insert three spacers (9) into limit switch bracket and place position transmitter board so that the spacers locate correctly in the three holes in the circuit board. Press firmly into place.

7b For EL-100 through EL-1600.
Mount position transmitter on limit switch bracket using 3 screws (9) and 3 plastic spacers (the screws engage with 3 nuts welded to top motor plate).

7c For EL-2500.
Insert three spacers (9) into print bracket and place position transmitter board so that the spacers locate correctly in the three holes in the circuit board. Press firmly into place.

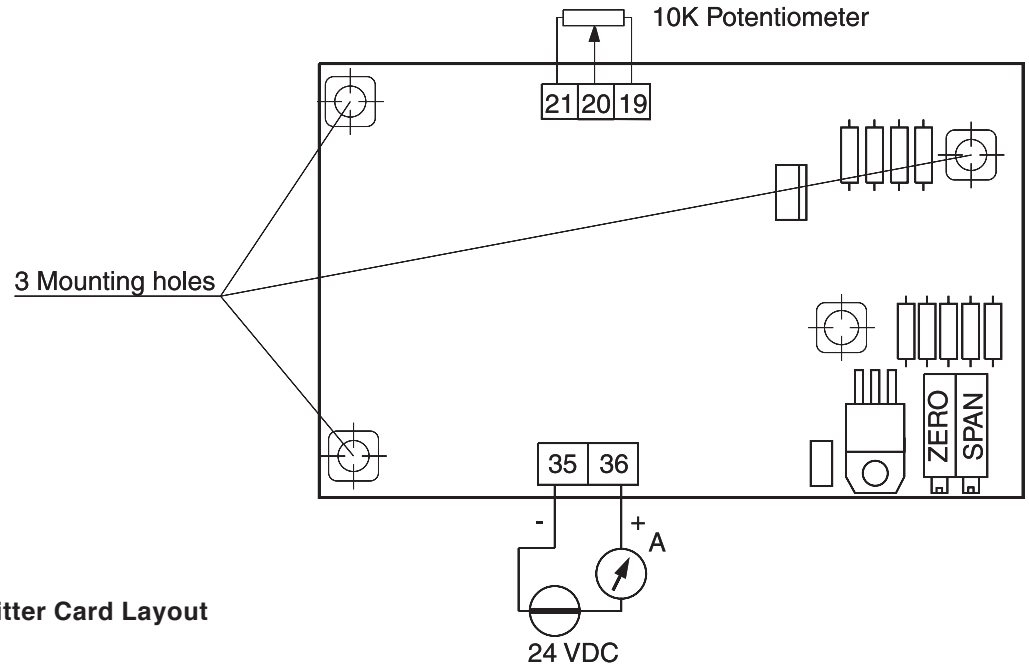

Fig. 3.
Position Transmitter Card Layout

Calibration Procedure

8. Connect 24 V DC. power supply to terminals 35 and 36, positive lead to be connected to terminal 36. Connect a 4 - 20 mA meter in series with positive power supply and terminal 36. As shown in the wiring diagram below.

9. Turn actuator to the fully closed position and install 24 V.DC. power supply to position transmitter and check if mA meter indicates approximately 4 mA. If meter indicates approx 20 mA, reverse brown potmeter leads at terminals 19 and 21, meter should now indicate 4 mA.

Note: EL55 does not have torque switches.

10. Adjust trimpotmeter marked “ZERO” to achieve 4 mA. then operate actuator to the fully open position and adjust trim potmeter marked “SPAN” to achieve 20 mA.
(This step may have to be repeated several times to achieve accurate indication).

Note: A digital mA meter may be connected in series with power supply for a more accurate setting.

11. Replace dial (1) and align in the proper position. Replace actuator cover and fasten bolts securely taking care that the “O” ring is properly located in the “O” ring groove

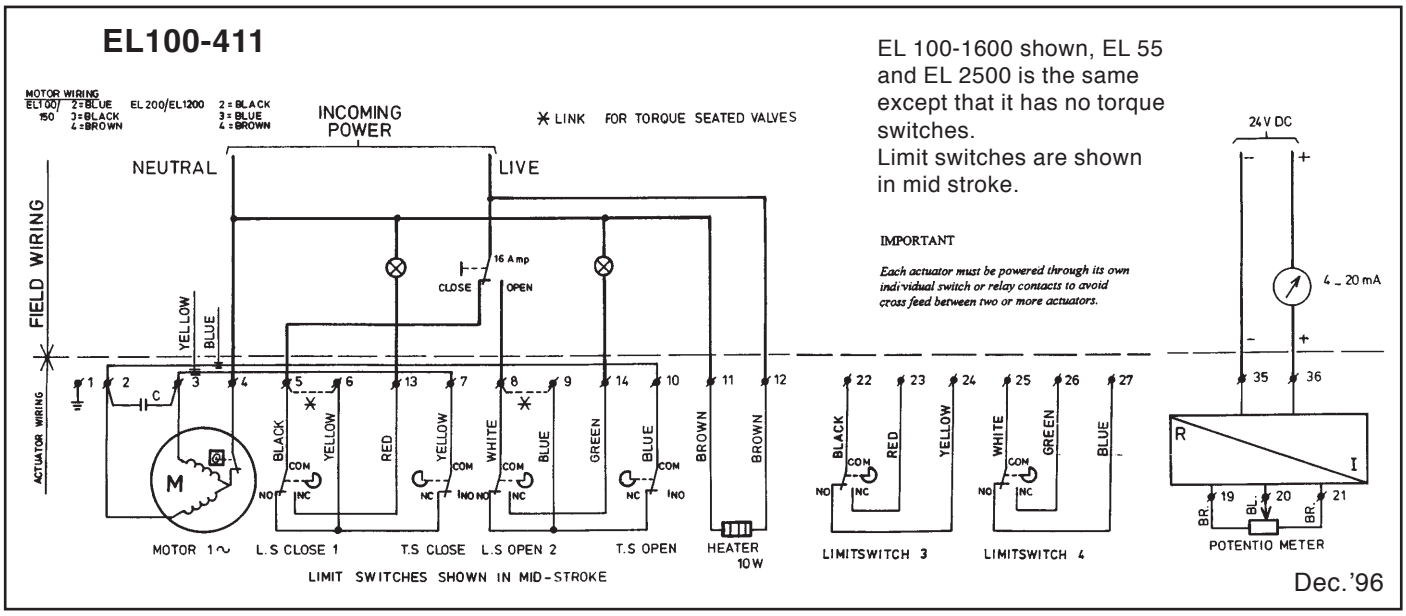

The position transmitter card is fixed on top of the limit switch bracket with the potentiometer fixed to the bracket itself, the drive for this is by a pair of gears from the indicator shaft.

Before starting check “PT4” kit to ensure that all parts are available.

Pc.Nr.	Qty	Description	Used on
3	1	Drive pinion (large).	EL 55 - EL 2500
4	1	Pinion (small).	EL 55 - EL 2500
5	1	Potentiometer spacer.	EL 55 - EL 2500
6	1	Potentiometer	EL 55 - EL 2500
9	3	Print spacer	EL 55 - EL 2500
9	3	Print spacer and screw	EL 100 - EL 1600
16	1	Position transmittercard	EL 55 - EL 2500

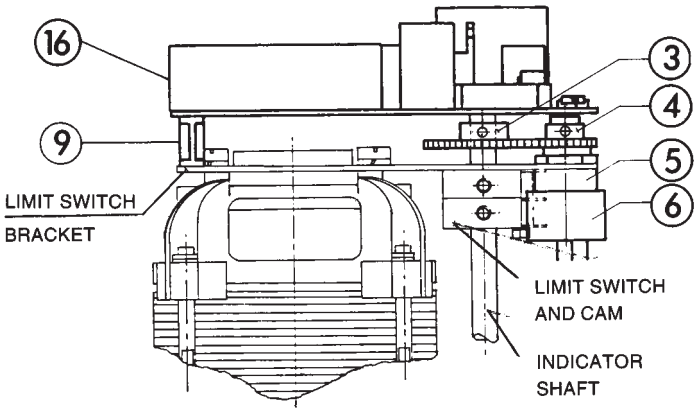

Fig. 2. Position Transmitter Detail

Installation Procedure

1. Remove actuator cover (2).
2. Remove dial (1).

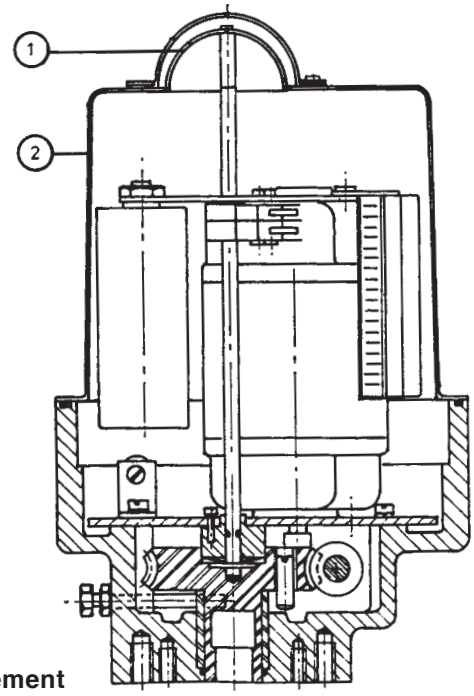

Fig. 1.
General Arangement

3. Mount potentiometer (6) on limit switch bracket using nut and spacer 5.

4. Slide potentiometer pinion (4) (small) onto pot. shaft and tighten screw.

5. Slide drive pinion (3) (large) onto indicator shaft.

6. Ensure that end of travel limit switches have been set correctly and actuator is in mid position.
Turn potentiometer shaft in mid position and tighten drive pinion screw onto the indicator shaft (do not overtighten).

7a. For EL-55.
Insert three spacers (9) into limit switch bracket and place position transmitter board so that the spacers locate correctly in the three holes in the circuit board.
Press firmly into place.

7b For EL-100 through 1600.
Mount position transmitter on limit switch bracket using 3 screws and 3 plastic spacers (the screws engage with 3 nuts welded to limit switch bracket).

7c For EL-2500.
Insert three spacers (9) into print bracket and place position transmitter board so that the spacers locate correctly in the three holes in the circuit board. Press firmly into place.

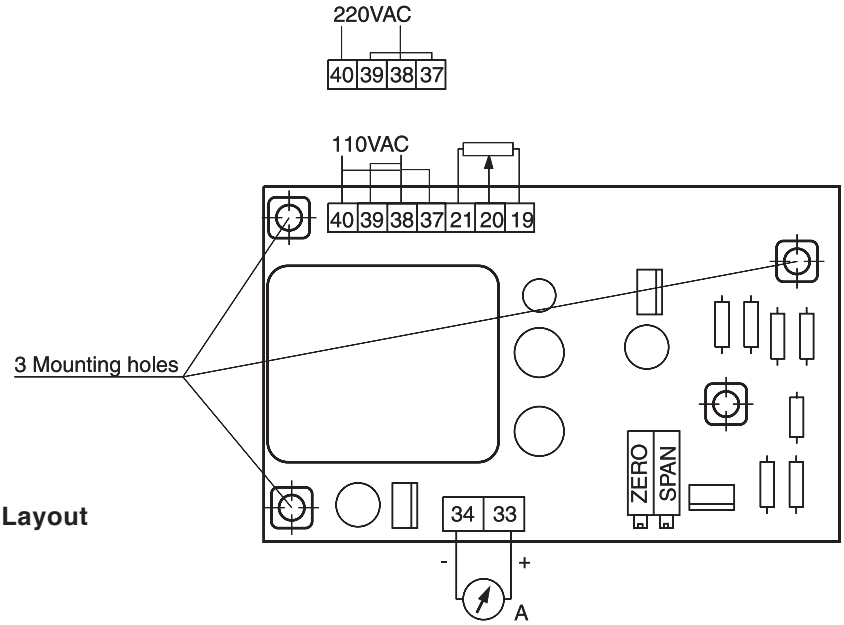

Fig. 3.
Position Transmitter Card Layout

Calibration Procedure

8. **Important:**

   220 Volt: Connect power supply leads to terminals 38 and 40, and place a link between terminals 37 - 39.

   120 Volt: Connect power supply leads to terminals 38 and 40, place one link between terminals 37 - 40 and another between terminals 38 - 39.

9. Connect a 4 - 20 mA meter to terminals 33 and 34.

10. Apply power to the actuator and operate to the fully closed position, check if mA meter indicates approximately 4 mA.
    If meter indicates approx 20 mA, reverse brown potmeter leads at terminals 19 and 21, meter should now indicate 4 mA.

Note: EL55 does not have torque switches.

11. Adjust trimpotmeter marked “ZERO” to achieve 4 mA.
    Then operate actuator to the fully open position and adjust trimpotmeter marked “SPAN” to achieve 20 mA.
    (This step may have to be repeated several times to achieve accurate indication).

Note: A digital mA meter may be connected in series with a panel meter and one of the terminals 33 or 34, this will not affect final readout on panel meters.

12. Replace dial (1) and align in the proper position. Replace actuator cover and fasten bolts securely taking care that the “O” ring is properly located in the “O” ring groove.

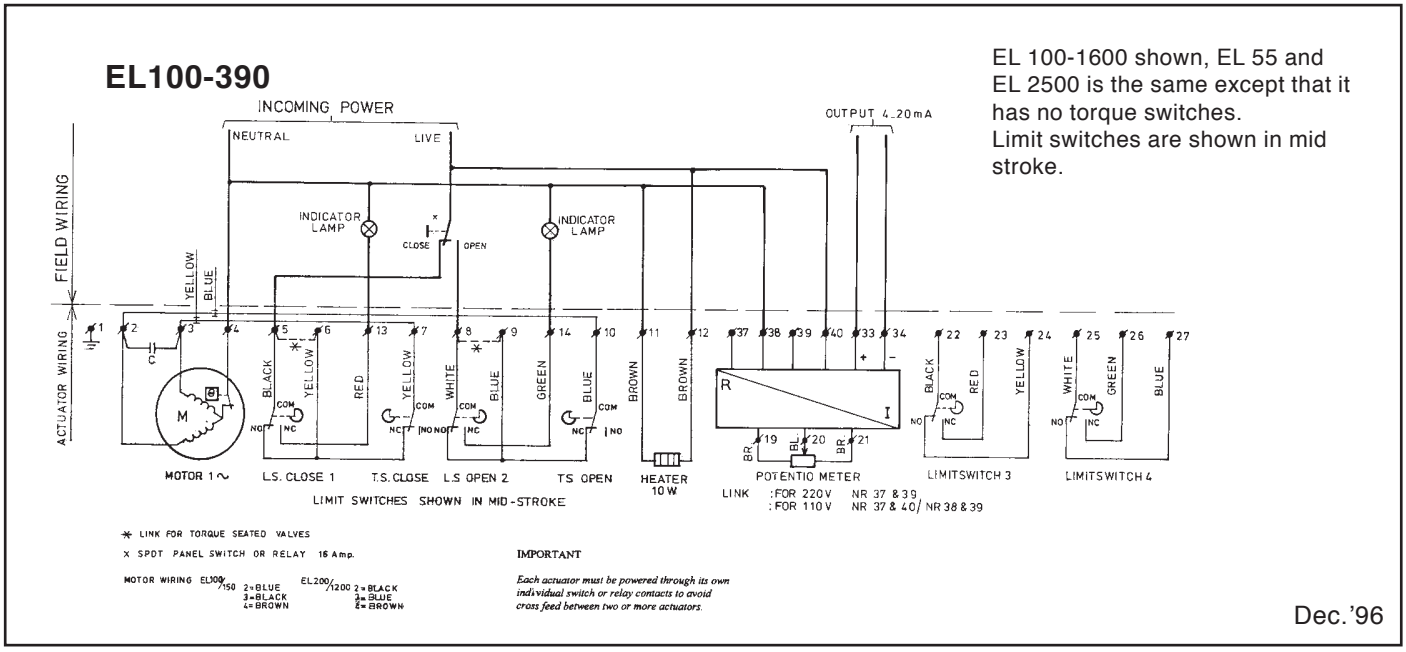

THEORY OF OPERATION:

This electric valve actuator option provides continuous proportional position modulation for process control applications. The positioner drives the actuator to an angle of rotation proportional to the level of a 4-20 mA.DC process control signal (other input current and voltage ranges are available) applied to its input terminals. Comparator circuits in the positioner compare the control signal with a reference signal generated by a potentiometer coupled to the actuator output shaft. A difference between the control signal and reference signal energizes the drive motor in the appropriate direction to eliminate the difference (achieve a null). The actuator drives at full speed until the difference signal is approximately 5% of span. At that point, a slow-approach-to-setpoint pulsing circuit slows the motor to achieve accurate positioning without overshoot. The slow-approach feature, by eliminating actuator over-shoot and attendant hunting, reduces motor heating and the need for high-duty-cycle motor ratings for positioning applications.

Calibration controls on the circuit board include Zero, Span, Alignment (mid-position linearity) and Deadband. Deadband adjustment is provided to eliminate hunting caused by small, frequent changes in process value.

Opto-isolation provides a high degree of noise immunity, especially important in industrial plants with high levels of power line noise. Triac motor switching eliminates relay contacts and improves long term reliability. Zero-crossing triac drivers further improve reliability while eliminating line noise generation. Limit switches and torque switches control actuator travel through positioner low-level control circuitry, further enhancing long term reliability.

A Re-transmit output signal (of the same current or voltage range as the input signal) is provided for remote position indication, process control feedback or an other process element.

PHYSICAL DESCRIPTION:

The positioner circuit board is mounted inside the actuator electric compartment cover, becoming an integral part of the actuator. The feedback pot (potentiometer) supplied with the positioner option is of the conductive plastic type, offering stepless resistance feedback. The pot is environmentally sealed for improved durability. The pot is driven through spur gears by the actuator indicator shaft at a reduction ratio (for a 90° actuator) to enhance resolution. The pot is rigidly mounted to the actuator limit switch bracket, which also supports the positioner board. Available in field-retrofit kit form, the circuit board is supplied with pot and connection wires already attached, requiring only physical mounting and wiring to the actuator main terminal strip and field wiring.

INSTALLATION:

Before Beginning Positioner Installation:

1. Connect the actuator as without positioner and operate to check for normal operation.
2. Set limit switches per instruction elswhere in this Actuator Installation and Operation Manual.
3. Set actuator to mid position.
4. Leave electrical compartment cover off.
5. Disconnect power.
6. Motor capacitor may be temporarily removed from limit switch bracket to provide more working space.
7. Review the entire installation procedure before beginning.
8. Check kit contents against items in Table 1 (below).

PARTS LIST: MOD INSTALLATION KIT				
Fig #	Qty	Description	Used on EL	
			55	100/1600
3	1	Drive pinion (large)	*	*
4	1	Potentiometer pinion (small)	*	*
5	1	Potentiometer spacer	*	*
6	1	Potentiometer 10K Ohms	*	*
9	3	Standoff	*	*
9	3	Spacer/screw/washer	*	*
16	1	Positioner board	*	*
	1	Set screw, drive pinion	*	*
	2	Pin terminal, blue	*	*
	3	Wire tie	*	*

Table 1

Mounting:

Refer to Fig. 1 for the following steps (numbers in brackets are figure references):

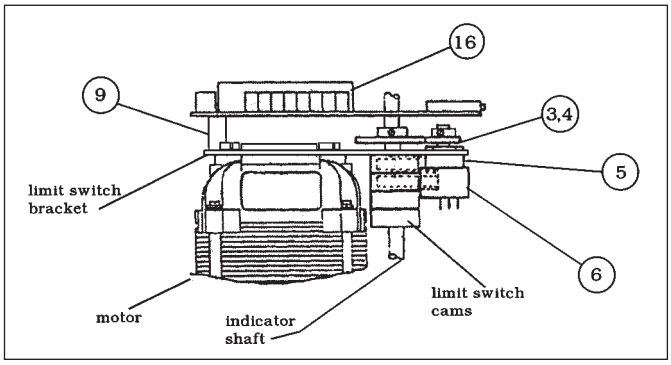

fig. 1. Positioner Mounting.

1. Remove position indicator dial.
2. **EL-55:** snap self-locking plastic spacers into three holes provided in limit switch bracket (position spacers with “wings” toward limit switch bracket).
3. Install setscrew in hub of large gear (potentiometer drive gear).
4. Install drive gear on indicator shaft (leave setscrew loose).

5. **EL-55:** slide positioner circuit board over indicator shaft and position on self-locking spacers but don't press board onto spacers at this time.
   EL- 100 to 1600: slide board over indicator shaft and rest on limit switch bracket in proper orientation.
6. Remove nut from pot bushing, leaving plastic spacer (5) in place. Install pot (6) in large hole in limit switch bracket (next to motor capacitor). Re-install nut and tighten.
7. Install pot gear on pot shaft and tighten setscrew (DO NOT OVERTIGHTEN).
8. Rotate pot to mid position.
9. Mesh drive and driven gears (do not rotate pot during this step). Align top surfaces of gears to prevent setscrew interference during rotation. Tighten drive gear setscrew (DO NOT OVERTIGHTEN).
10. **EL-55:** Press circuit board onto spacers so spacers lock into holes. **EL-100 to 1600:** Install circuit board with spacers/screws/flat washers/star washers provided.
11. Re-install motor capacitor if it was removed for access.

Wiring:

Before beginning wiring connections, remove yellow and blue jumper wires from right side of main terminal strip.

Refer to the wiring diagram (fig. 2) and connection diagram (fig. 3). For 3 phase and DC actuators, or actuators with Local Control, see further in this Installation and Operation manual. If your configuration is not included in the manual, contact EL-O-MATIC before attempting to wire positioner.

1. Connect positioner board terminals 37 and 40 (brown leads) to terminals 11 and 12 on the left side of the actuator's main terminal strip. To do this, remove the heater leads from terminals 11 & 12 and cut off the pin terminals. Using new pin terminals (blue) from the kit, install one heater wire and one positioner wire into each pin terminal and crimp them in place. Replace the pin terminals into the main terminal strip. Observe correct terminal numbering (heater leads may be connected either way).

2a. First: remove links from 2-10 and 3-7.

2. Connect remaining positioner leads to the main actuator terminal strip on the right side as follows: 41 to 4, 42 to 2, 43 to 3, 45 to 5, 45 to 8 (there are two terminal 45's), 50 to 7, 51 to 10.
3. Use wire ties to harness leads into neat groups and away from heater and torque switches.
4. Select line voltage with selector switch on positioner board.

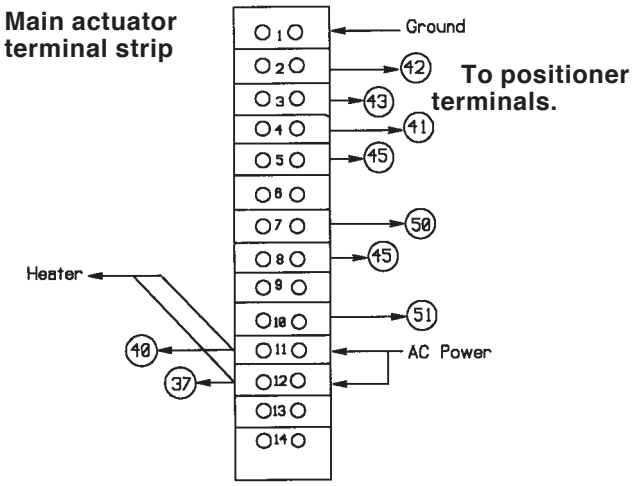

Fig. 3a. Actuator Main Terminal Strip.

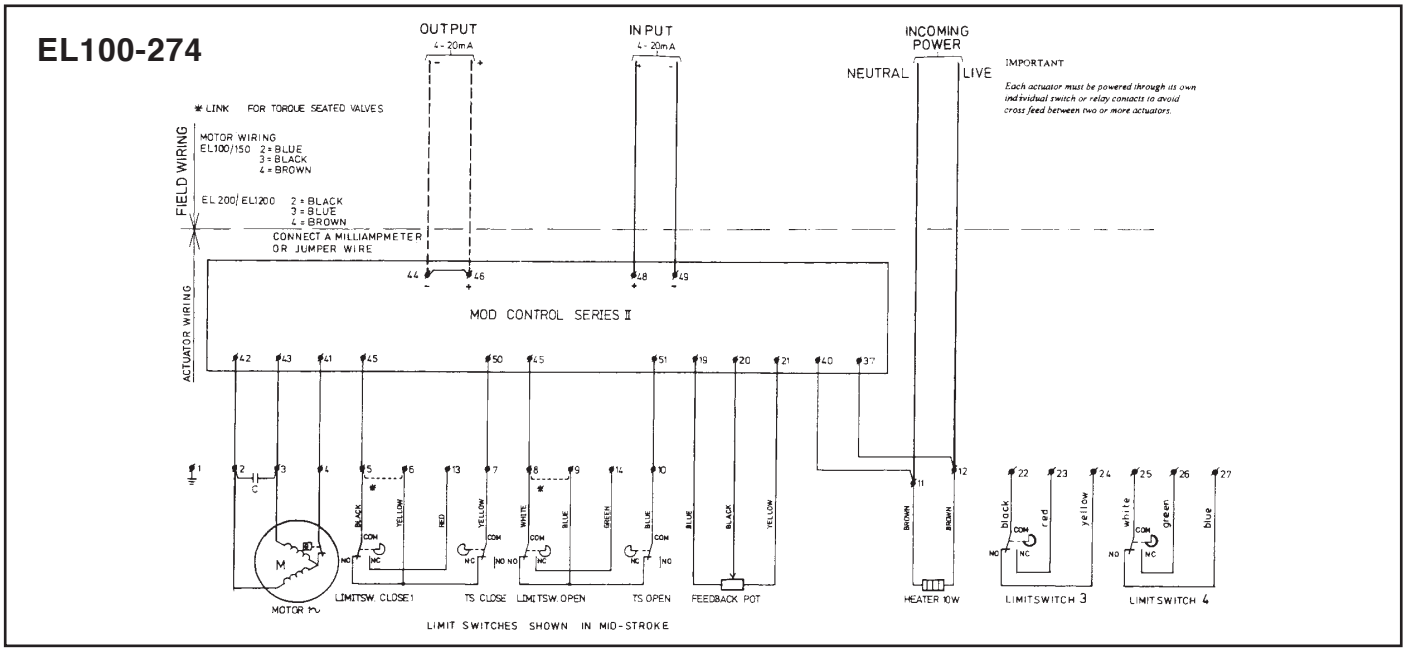

fig. 2. Positioner Wiring.

Calibration:

Before You Begin:

1. Actuator limit switches and mechanical stops must be properly set.
2. It is best to adjust the positioner with actuator mounted to the valve on which it is to be used. Since the closed position of the valve is generally more important (for shut-off) then the fully open position, you should provide a method for determining when the valve is closed.
3. Calibration pots are of the twenty turn type (end of rotation can be detected by listening for a click).
4. Re-install position indicator dial before beginning positioner adjustment, as it will provide a useful reference for motion and position during the adjustment process.
5. Pre-set DEADBAND pot to narrowest setting (fully ccw).

Setting Procedure:

1. Connect a variable milliamp source (signal generator) to terminals 48(+) and 49(-).
2. Connect a milliammeter or jumper wire between terms 44(-) and 46(+).
3. Apply power to actuator.

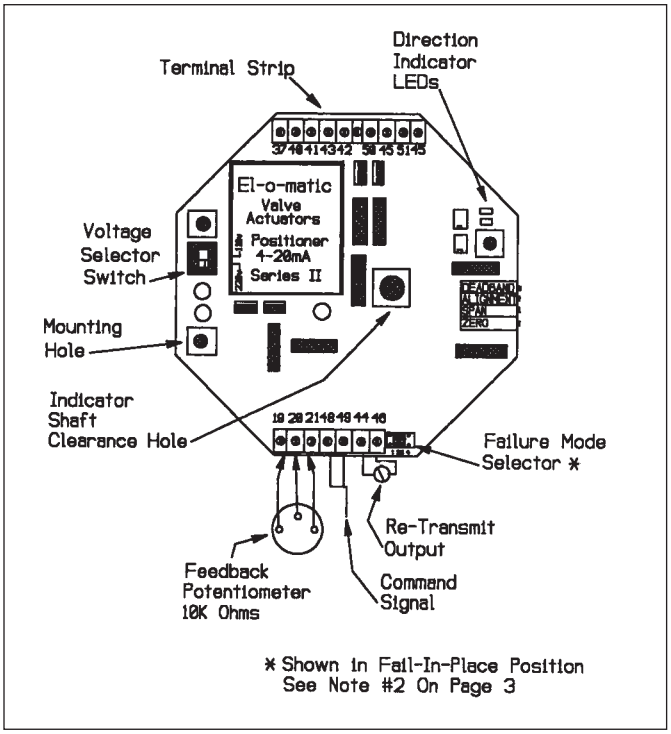

fig. 3b. Positioner Board Layout.

4. Set milliamp source to 4 mA. Actuator will run towards closed (cw) position (red LED will light while actuator runs). If reverse operation is desired (close on rising signal) see note 1 below.
5. Turn ZERO pot so that actuator moves toward fully closed position. Advance pot slowly so as not to overshoot the limit switch. The 4 mA point should correspond with the point at which the limit switch just clicks.

Note: The actuator will not run past the limit switches. If valve travel is inadequate, re-adjust the limit switches.

6. Set milliamp source to 20 mA. Actuator will run towards open (ccw) position. Green LED will light while actuator runs.
7. Turn SPAN pot in the same manner as in step 4 for fully open valve position.
8. Repeat steps 4 through 7 until both open and closed positions are satisfactory.
9. Set milliamp source to 12 ma.
10. Adjust “ALIGNMENT” pot so that actuator moves to 45° (for a 90° actuator). Your ammeter, if connected to the output terminals, will indicate approximately 12 mA. Adjust this setting until 12 mA is indicated.
11. Re-check ZERO and SPAN for output indication. Steps 4 through 10 may be repeated to obtain the highest degree of accuracy, however output indication cannot be set independently of position. Accuracy of output is +/- 0.15 mA of command signal (i.e., for a command signal of 4.00 mA, an output indication of 3.85 to 4.15 mA or better should be attainable).

Notes:

1. For “reverse acting” (i.e., 20 mA to close) reverse pot leads on terminals 19 and 21, motor leads on terminals 42 and 43, and limit switch leads on terminals 50 and 51.
2. The positioner board, as supplied, is configured for “fail in place” on loss of control signal. This may be changed to “fail closed” by removing configuring plugs (next to terminal 46) from pins 2 and 3 and replacing them on pins 1 and 4.
3. Deadband and slow-approach: You will observe, during positioner adjustment, that as the actuator nears the set point, the appropriate LED will pulse several times before the actuator stops. If the pulsing seems prolonged or excessive, increase the dead-band (rotate cw). Note that this will affect the zero and span settings so these points should be re-adjusted if the deadband is widened after they have been initially set.
4. All signal wires are to be free of electrical noise and interference. It is recommended that all signal wires be shielded or run in separate grounded metal conduit.
5. Actuator must be properly grounded for MOD to operate correctly.

Plug and socket - Installation Instructions - PL

The plug and socket assembly is fixed to the actuator housing on one of the two ancillary mounting pads. The small pad is for the 6 pole socket and the large pad is for the 16 pole version.

Before starting check "PL" kit to ensure that all parts are available.

Pc.Nr.	Qty	Description
1	1	Rubber gasket, 6 pole.
2	4	Screw and lock washer.
3	1	Socket connector, 6 pole.
4	1	Plug connector, 6 pole.
5	1	Rubber gasket, 16 pole.
6	1	Socket connector, 16 pole.
7	1	Plug connector, 16 pole.

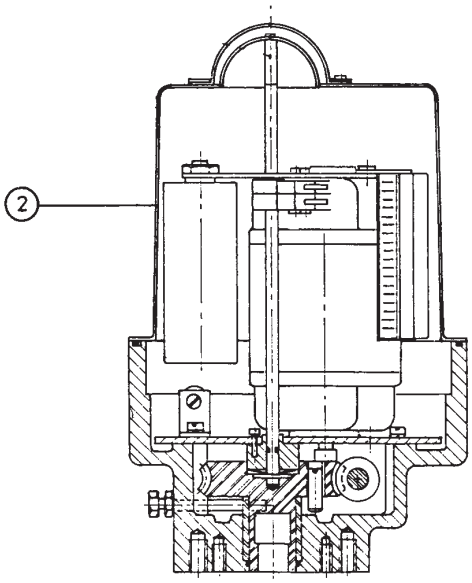

Fig. 1.
General Arangement

Installation Procedure

1. Remove actuator cover (2).
2. Remove one blindplug from actuator conduit entry.
3. Bolt connector socket (male pins) (3) to actuator housing after feeding 7 electrical leads through actuator conduit entry into motor compartment.
4. Ensure that rubber gasket (1) is placed between Connector Socket and actuator housing.
5. Connect wiring from connector socket to actuator terminal strip as follows:-

From Socket Connector		Term. No. EL-55	EL-100/2500.
Yellow/Green	-	1	1
Purple	-	4	4
Black	-	5	5
Red	-	6	13
White	-	8	8
Green	-	9	14
Brown	-	12	12

EL35-381
EL 55 PLUG AND SOCKET WIRING

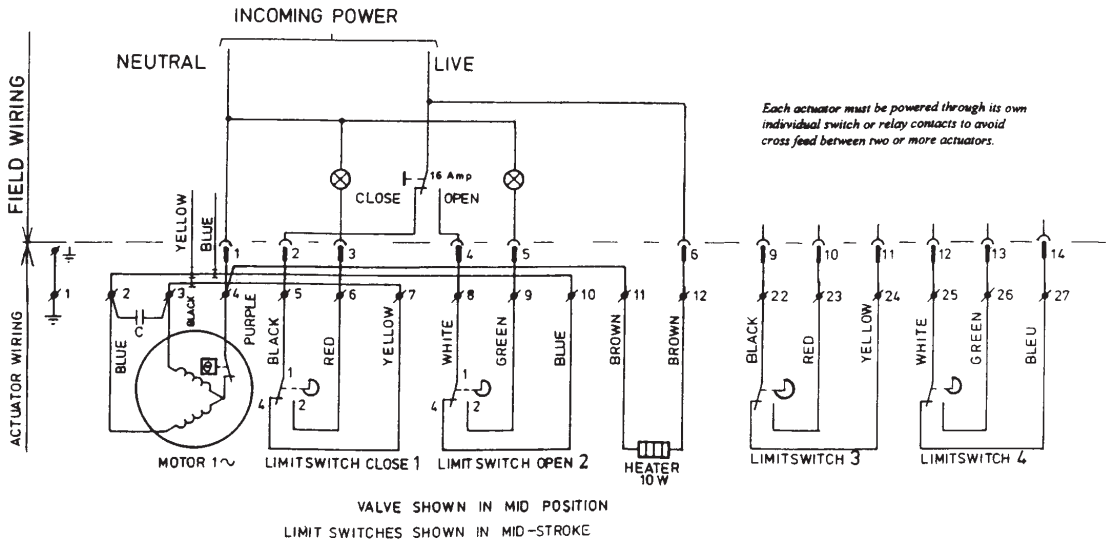

Dec.'96

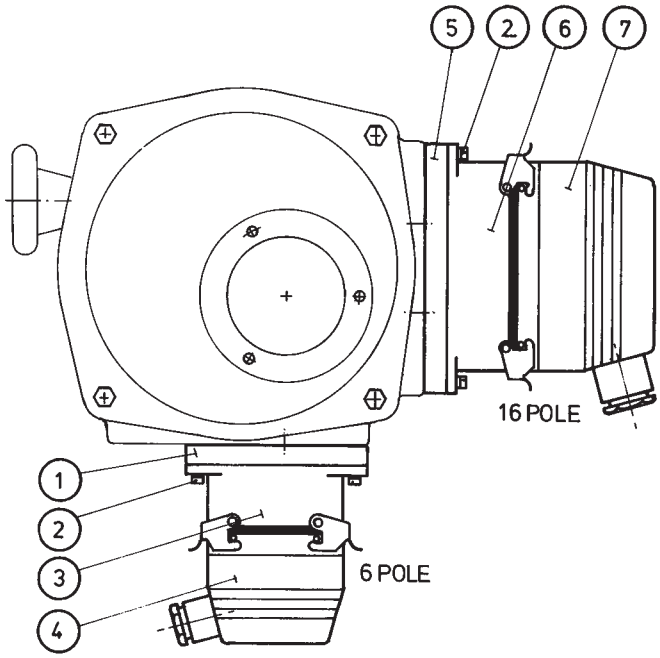

Fig. 2.
Plug and Socket Layout

6. Replace actuator cover and fasten bolts securely taking care that the “O” ring is properly located in the “O” ring groove.

7. Connect connector plug (female pins) as follows:-

Cable.		Plug connector. terminal. No.
Earth	-	Plug chassis.
Neutral	-	1
Close command	-	2
Close signal	-	3
Open command	-	4
Open signal	-	5
Heater Phase	-	6

Please note:

The above is the method of wiring for the 6 pole plug and socket. Should you require to connect more cores to your unit we suggest that you use a 16 pole plug and socket connector. The wiring diagram for this will be available through El-o-matic.

The wiring shown here is for a single phase supply. If you are working with a different supply please be sure to obtain a proper diagram.

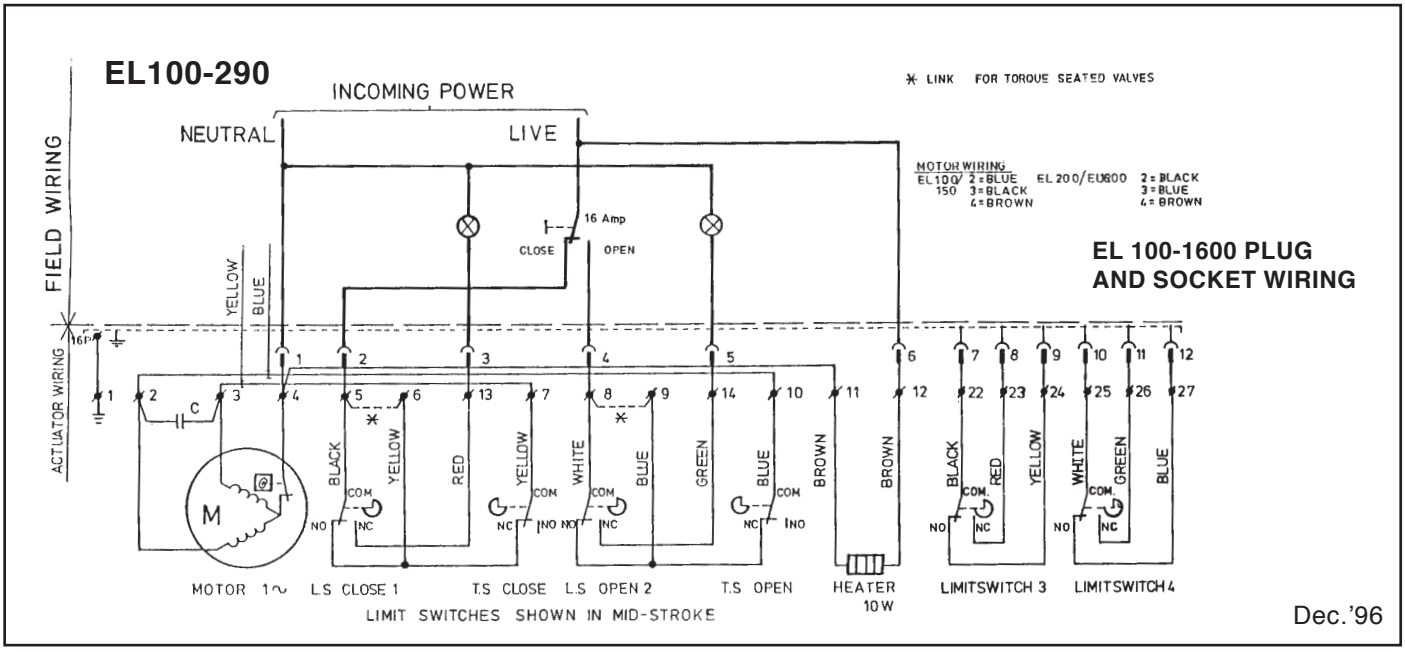

The local controller assembly is fixed to the actuator housing located on the smaller of the two ancillary mounting pads.

Before starting check "LC" kit to ensure that all parts are available.

Pc.Nr.	Qty	Description
1	1	Rubber gasket.
2	4	Screw and lock washer.
3	1	Local control station.

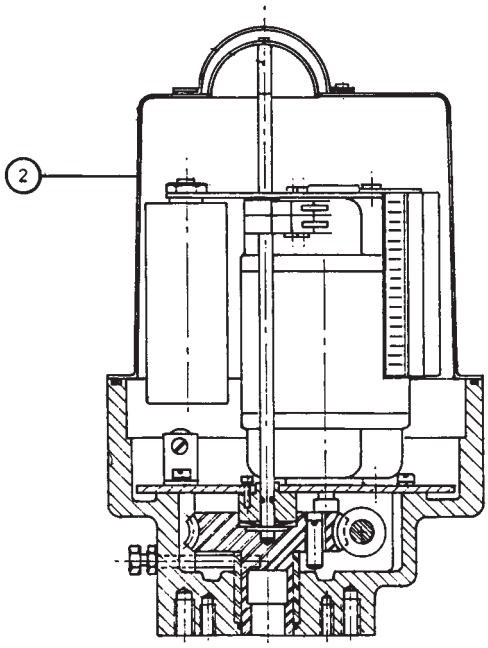

Fig. 1.
General Arangement

Installation Procedure

1. Remove actuator cover (2).
2. Bolt Local Control Station to actuator housing after feeding the Five electrical leads through the conduit entry into the motor compartment.
3. Ensure that rubber gasket (1) is placed between Local Control Station and actuator housing.
.4. Remove one blind plug from actuator conduit entry (always mount the Local Control Station on the face with one conduit entry, leaving both the other entries available for cabling).

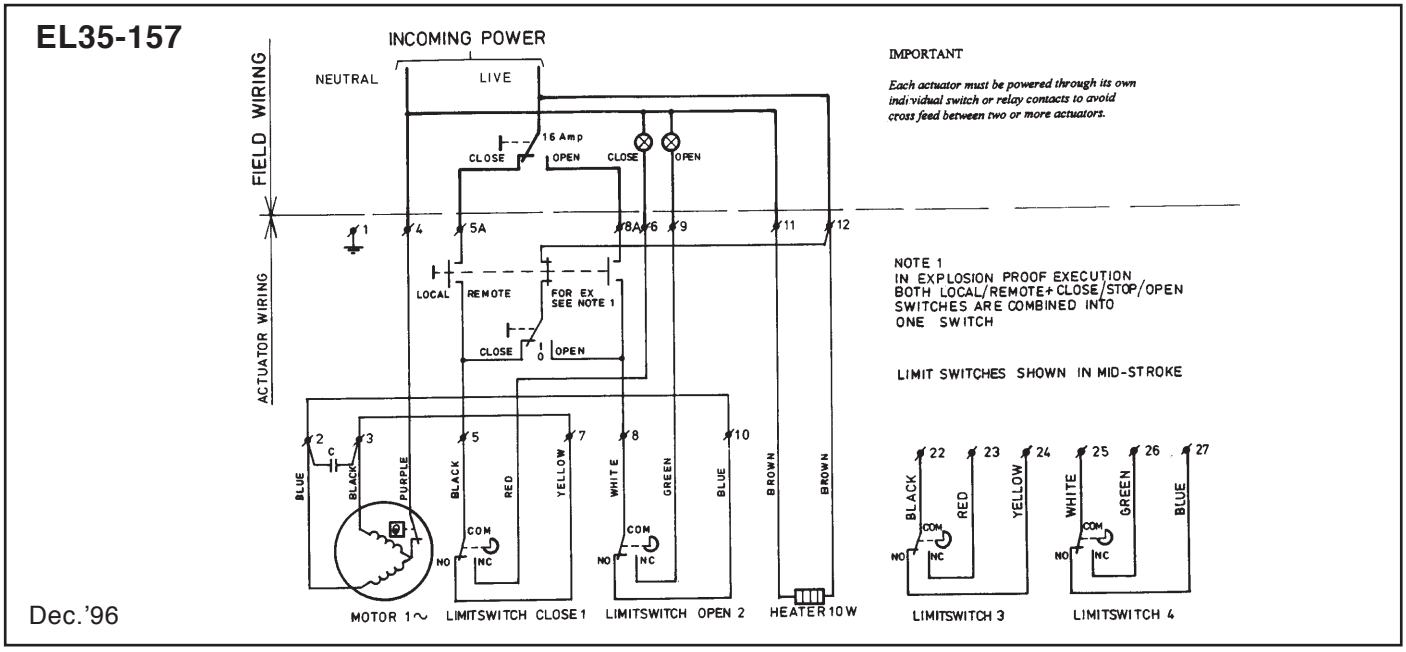

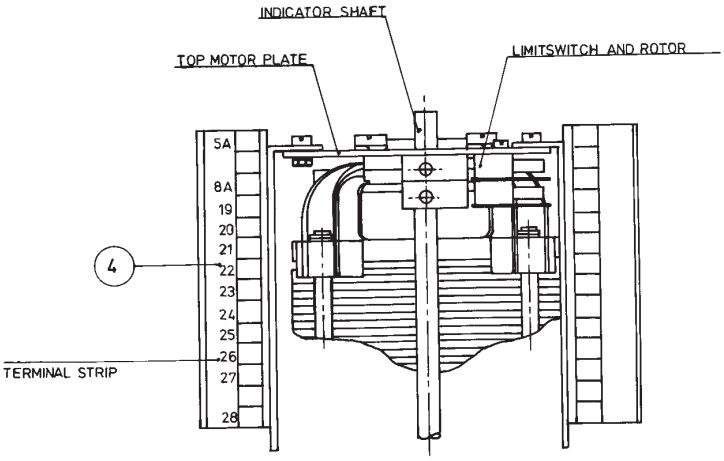

Fig. 2.
Location of Terminal Strip

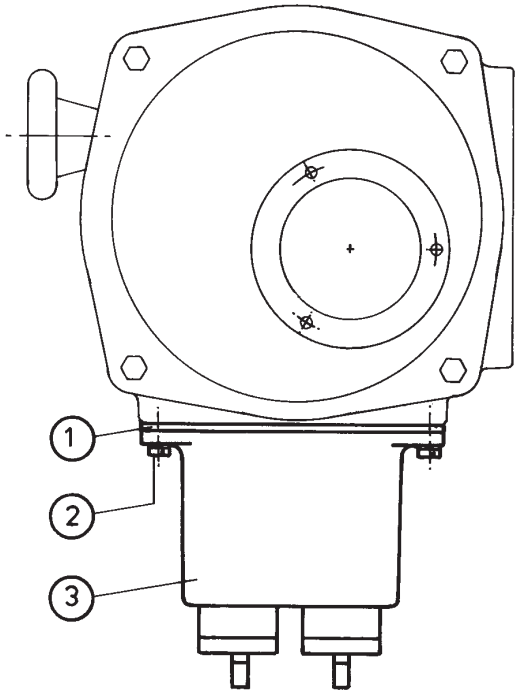

Fig. 3.
Local Controller Layout.

5. Connect wiring from Local Control Station to terminal strips as follows:-

Cable from Control Station	Term No.	
Black 5A	5A	(aux. term. strip)
Black 5	5	(main term. strip)
Brown 12	12	(main term. strip)
White 8A	8A	(aux. term. strip)
White 8	8	(main term. strip)

6. Replace actuator cover and fasten bolts securely taking care that the “O” ring is properly located in the “O” ring groove.

Please note:

The above procedure may be used for either the standard LC, or the alternative version with the key lock.

The wiring shown here is for a single phase supply. If you are working with a different supply, or MOD option, please be sure to obtain a proper diagram.

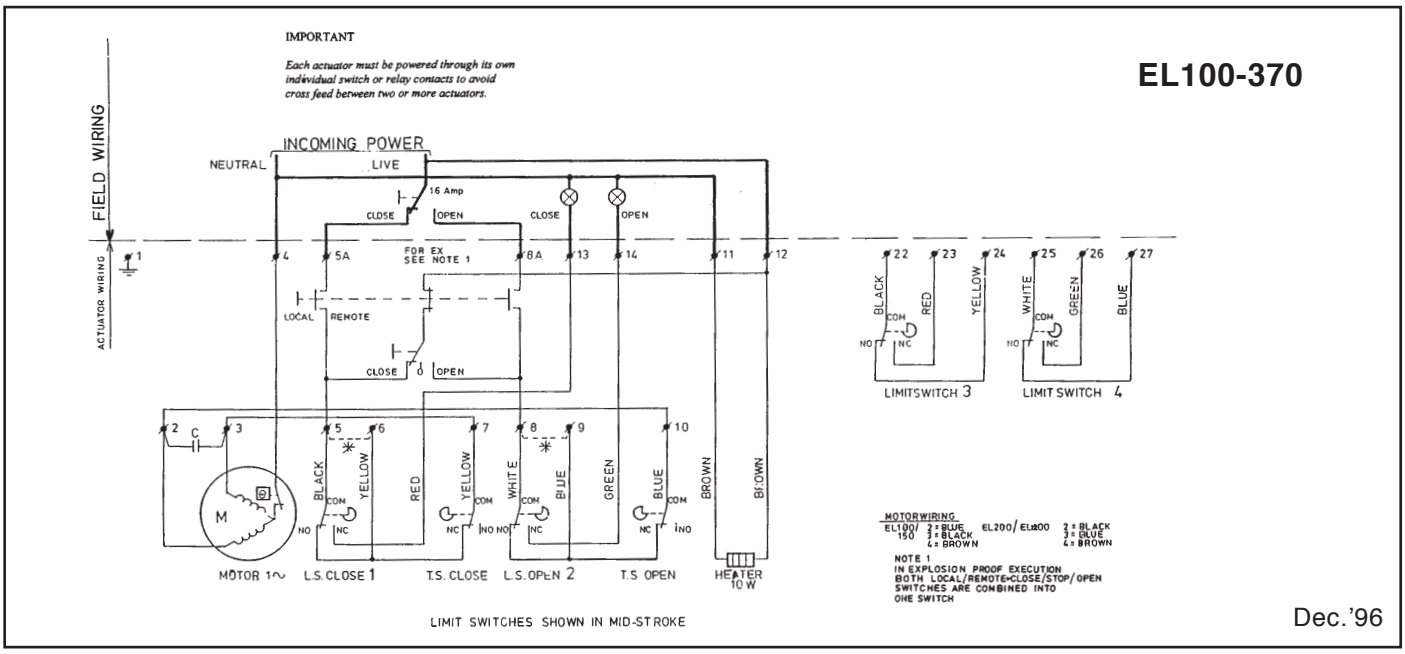

Disassembly procedure

Caution:
- Do not attempt to work on your EL-O-MATIC actuator until all power to the unit has been shut off.
- Always disconnect all incoming power leads from the actuator terminal strips.
- Never disassemble or reset torqueswitches
- For bracket drawing reference numbers refer to the applicable parts drawing.

EL-20.
1. Remove cover (6).
2. Remove motor support plate (11) by removing five screws (25).
3. Lift motor support plate, motor and switch assembly from the unit housing, taking care not to bend the indicator shaft. The indicator shaft comes out, it must be removed with the motor support plate.
4. Remove setscrew (41) and pins (37) and slide the wormshaft (34) from the unit housing.
5. All gearing can now be removed from the housing.

EL-35/55.
1. Remove cover (3).
2. Remove the indicator dial (26).
3. Remove motor support plate (15) by removing seven screws (16).
4. Fix indicatorshaft (with cams) to prevent sliding down.
5. Lift motor support plate, motor and switch assembly from the unit housing, taking care not to bend the indicator shaft. The indicator shaft comes out, it must be removed with the motor support plate.
6. Remove setscrew (45), pins (39) and (42) and draw the wormshaft from the unit housing by pulling handwheel (56).
7. All gearing can now be removed from the housing.

EL-100/150.
1. Remove cover (38).
2. Remove motor support plate (4) by removing seven screws (5).
3. Important: Be sure that unit is not torqued against the stop screws. If it is, relieve by turning hand wheel
4. Fix indicatorshaft (with cams) to prevent sliding down.
5. Lift motor support plate, motor and switch assembly from the unit housing, taking care not to bend the indicator shaft. The indicator shaft comes out, it must be removed with the motor support plate.
6. Remove four screws (71) and remove wormcap (73).
7. Slide thrust bearing (65) and torque springs (70) from the worm shaft (72). The worm (68) and four torque springs (70) can now be removed from the wormshaft.
8. Remove key (69) and retaining ring (67).
9. Slide worm gear (66) over worm shaft and remove key and remove wormshaft (72) by pulling handwheel (56).

EL-200/350.
1. Remove cover (36).
2. Remove motor support plate (4) by removing six screws.
3. Important: Be sure that unit is not torqued against the stop screws. If it is, relieve by turning hand wheel
4. Fix indicatorshaft (with cams) to prevent sliding down.
5. Lift motor support plate, motor and switch assembly from the unit housing, taking care not to bend the indicator shaft. The indicator shaft comes out, it must be removed with the motor support plate.
6. Remove spur gear (81), worm (84), Wormshaft (85) and two thrust bearings (86) by lifting spur gear (81) upwards out of the gear case.
7. Remove four screws (99) and remove wormcap (72).
8. Slide thrust bearing (63) and eight torque springs (67) from the wormshaft (69).
9. Slide worm gear (64) and eight torque springs from the wormshaft.
10. Remove Key (66) and (71) and screws (65) and draw the wormshaft (69) from the unit by pulling handwheel (54).

EL-500/800.
1. Remove cover (77).
2. Remove motor support plate (61) by removing 7 screws (62).
3. Important: Be sure that unit is not torqued against the stop screws. If it is, relieve by turning hand wheel.
4. Fix indicatorshaft (with cams) to prevent sliding down.
5. Lift motor support plate, motor and switch assembly from the unit housing, taking care not to bend the indicator shaft. The indicator shaft comes out, it must be removed with the motor support plate.
6. Remove spur gear (13), worm (11), Wormshaft (21) and two thrust bearings (10) by lifting spur gear (13) upwards out of the gear case.
7. Remove four screws (34) and remove wormcap (31).
8. Slide thrust bearing (24) and torque springs (27) from the wormshaft (96).
9. Remove key (29) and screw (104) and slide worm gear (26) and eight torque springs from the wormshaft.
10. Remove key (26) and (29) and screw (104) and draw the wormshaft (96) from the unit by pulling handwheel (3).

REASSEMBLY

Assembly in reverse order of above

Trouble Shooting

Although we would not expect you to experience any problems with your El-O-Matic valve actuator we have listed some checkpoints should your actuator not function as desired.

Rotation

If limit switch fails to stop valve travel, check the following:

- Direction of rotation of output shaft
- Control wiring
- Limit switch setting

Actuators with torque switches. If limit switch fails to stop valve travel:

- Check if link has been placed, for torque seated valve application. If not required - remove it.

Motor Not Running

If unable to operate your El-O-Matic by motor:

- Check both motor power and control circuits for supply and continuity.
- Compare supply voltage with motor nameplate, if OK, then check motor amperage load.
- If stalled motor is indicated and torque switches have not tripped or valve is moveable by the hand wheel, consult your supplier.

Overload

Excessive handwheel effort, motor overheating and/or high motor amperage load can indicate the following:

- Excessive valve load.
- Valve packing gland too tight.
- Improperly lubricated valve.
- Incorrect Motor capacitor.
- Ambient temperature too high.
- Valve cycling too often.
- Incorrect voltage.
- Incorrect wiring.

Motor Stops

If torque switch trips before reaching end of valve travel:

- Incorrect setting of mechanical end stops.
- Obstacle in valve.
- Valve required torque higher than actuator rated torque.

No Valve Movement - Motor Runs

- Drive sheared or not connected.

No Valve Movement - Motor won't Run

- Valve plug/disk jammed or obstructed.
- Valve requires torque higher than actuator rated torque.
- Valve packing gland too tight.

Stroking

It is not possible to stroke valve the full 90°:

- Check mechanical end stops.
- Check valve and actuator position.
- Actuator in open position = Valve in open position.

Condensation

Moisture inside electrical compartment:

- Check if compartment heater has been connected.
- Check if compartment heater has been connected to the correct supply voltage.
- Check if compartment heater is continuously under power - not only when motor is energized.
- Check heater resistance: 120 V - 1K Ω
  230 V - 4700 Ω
  380-480 V - 15K Ω
  24V - 47 Ω
- Check compartment cover seal.
- Check indicator window seal
- Check cable glands.
- Check pipe plugs in unused conduit entries.

Wiring diagrams - Electric actuator

Following is a short list of wiring diagrams. If you need wiring for an actuator not listed please contact your nearest Elomatic facility or representitave.

Basic Actuators

Actuator model	Function			Drawing No.	Page
EL35/55	ON/OFF	1 Phase ~	Standard	EL35-101	36
EL35/55	ON/OFF	3 Phase ~	Standard	EL35-103	36
EL35/55	ON/OFF	DC	Current limiter	EL35-106	36
EL100/1600	ON/OFF	1 Phase ~	Standard	EL100-093 *	37
EL100/2500	ON/OFF	3 Phase ~	Standard	EL100-087	37
EL100/800	ON/OFF	DC	Standard	EL100-090	37
EL1200/2500	ON/OFF	1 Phase ~	Standard	EL2500-017 **	40

Kit Options

Option	Actuator model	Function		Drawing No.	Page
Speed control	EL35/55	ON/OFF	1 Phase ~	EL35-239	38
Speed control	EL100/1600	ON/OFF	1 Phase ~	EL100-218 *	21
Potentiometer	EL35/55	ON/OFF	1 Phase ~	EL35-287	38
Potentiometer	EL100/1600	ON/OFF	1 Phase ~	EL100-114 *	20
Position transmitter 2 wire	EL35/55	ON/OFF	1 Phase ~	EL35-351	38
Position transmitter 2 wire	EL100/1600	ON/OFF	1 Phase ~	EL100-411	23
Position transmitter 4 wire	EL35/55	ON/OFF	1 Phase ~	EL35-337	39
Position transmitter 4 wire	EL100/1600	ON/OFF	1 Phase ~	EL100-390 *	25
Plug and socket	EL35/55	ON/OFF	1 Phase ~	EL35-381	29
Plug and socket	EL100/1600	ON/OFF	1 Phase ~	EL100-290 *	30
Local control station	EL35/55	ON/OFF	1 Phase ~	EL35-157	31
Local control station	EL100/1600	ON/OFF	1 Phase ~	EL100-370 *	22
Local control station	EL100/2500	ON/OFF	3 Phase ~	EL100-395	41
Integral contactors & local control station	EL100/2500	ON/OFF	3 Phase ~	EL100-268	41
3 Position control	EL35/55	ON/OFF	1 Phase ~	EL35-161	39
3 Position control	EL100/1600	ON/OFF	1 Phase ~	EL100-118 *	39
MOD Positioner	EL35/55	ON/OFF	1 Phase ~	EL35-288	40
MOD Positioner	EL100/1600	ON/OFF	1 Phase ~	EL100-274 *	27

Remark;

* For EL1200/1600 only 220V

** For EL1200/1600 only 120V

Actuator model : EL100/1200 1 Phase ~
Drawingnr : EL100-093

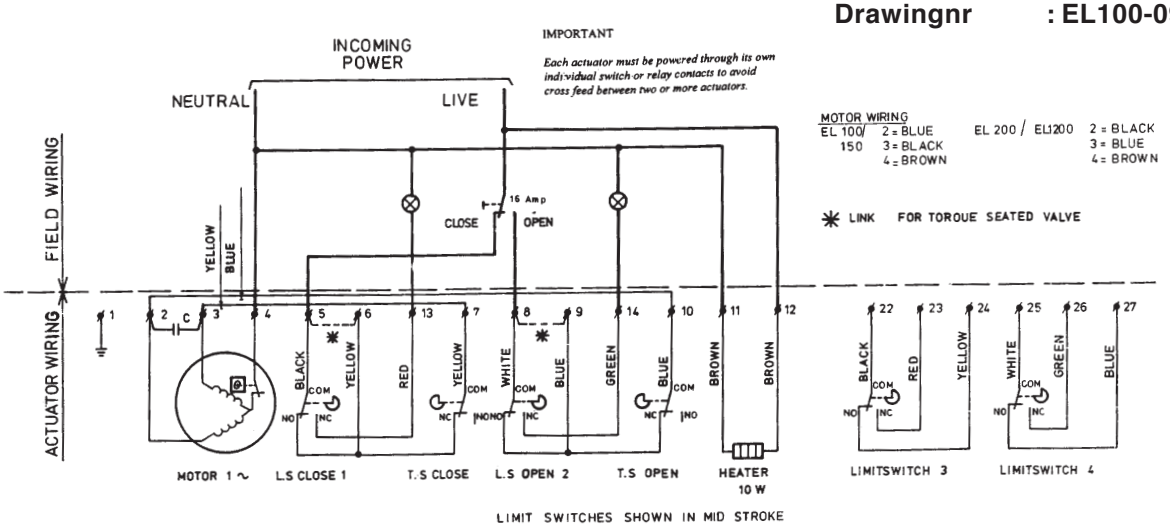

Actuator model : EL100/2500 3 Phase ~
Drawingnr : EL100-087

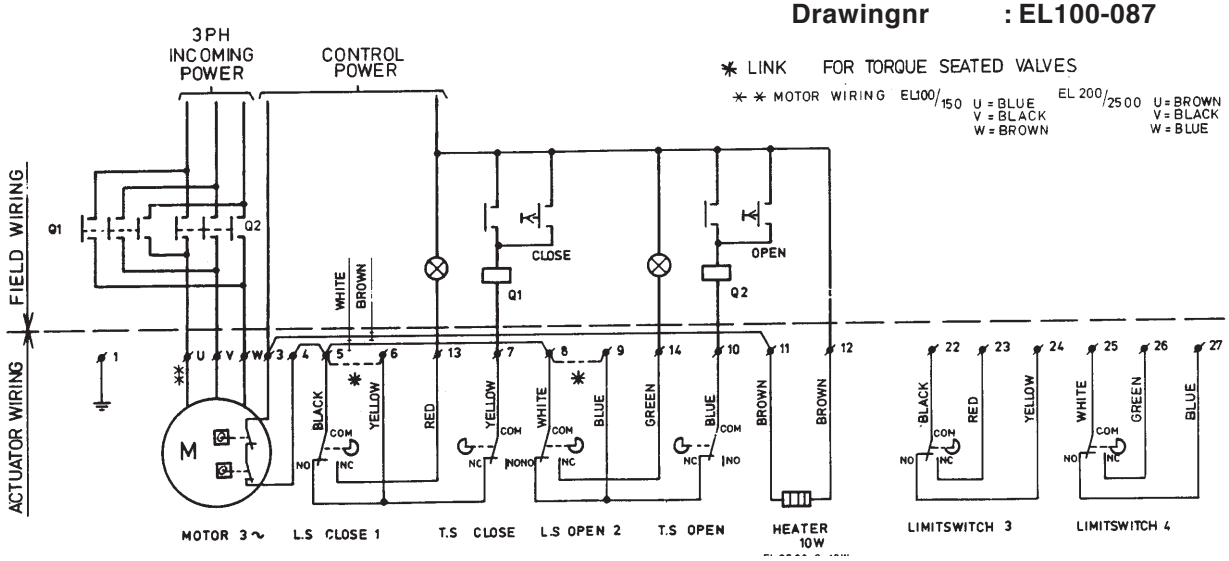

Actuator model : EL100/800 3 DC
Drawingnr : EL100-090

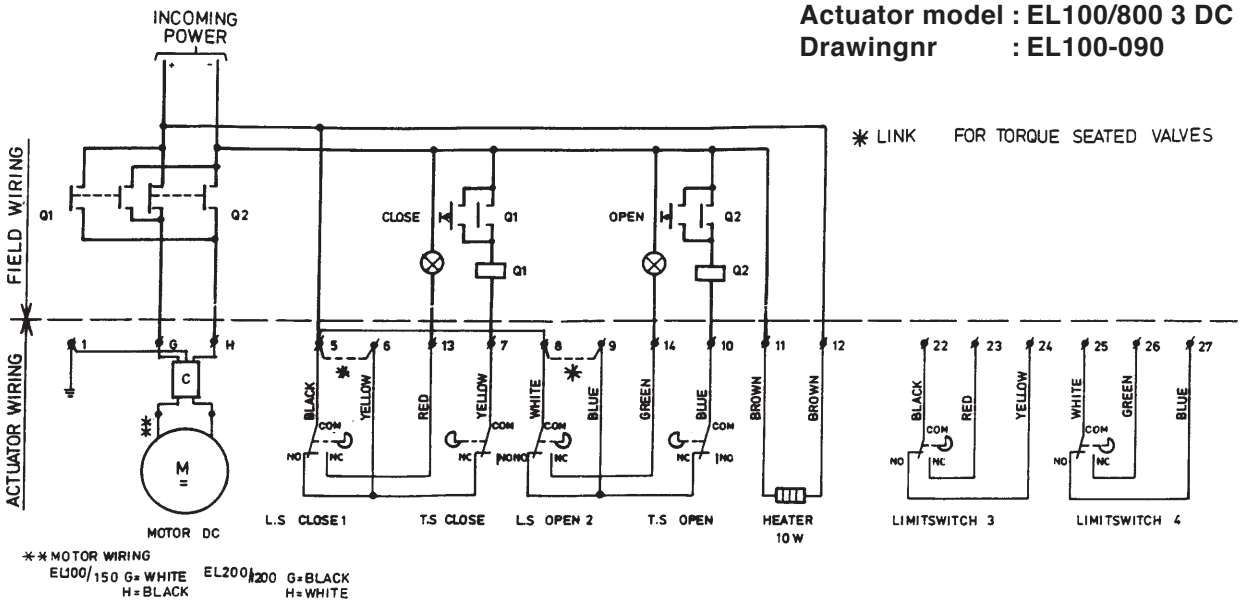

SPEED CONTROL (SC)
1 Phase ~
Drw.: EL35-239

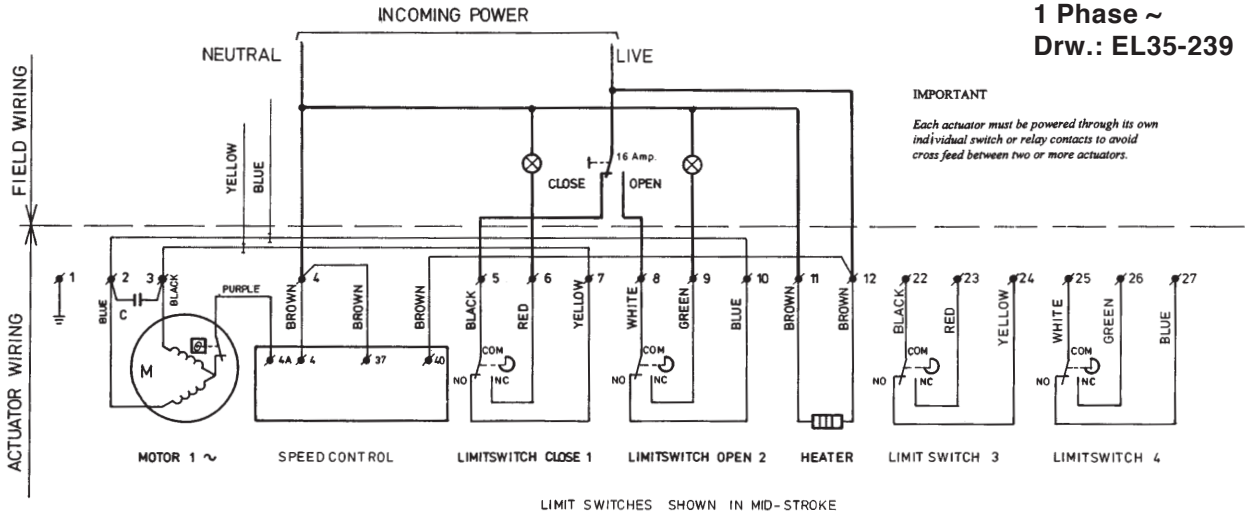

POTENTIOMETER (POT)
1 Phase ~
Drw.: EL35-287

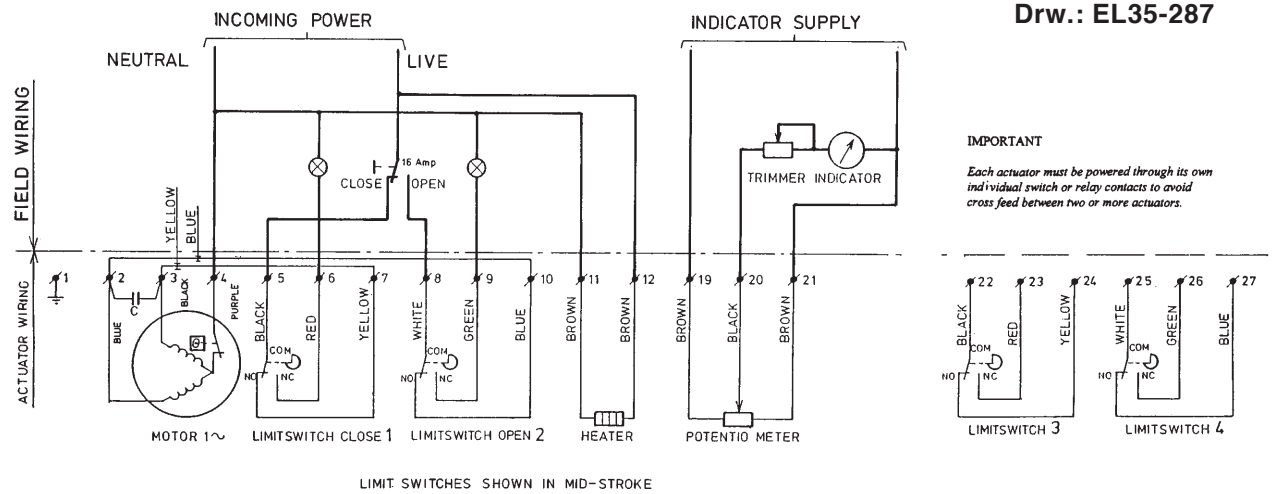

POSITION TRANSMITTER (PT2)
2 WIRE, 1 Phase ~
Drw.: EL35-351

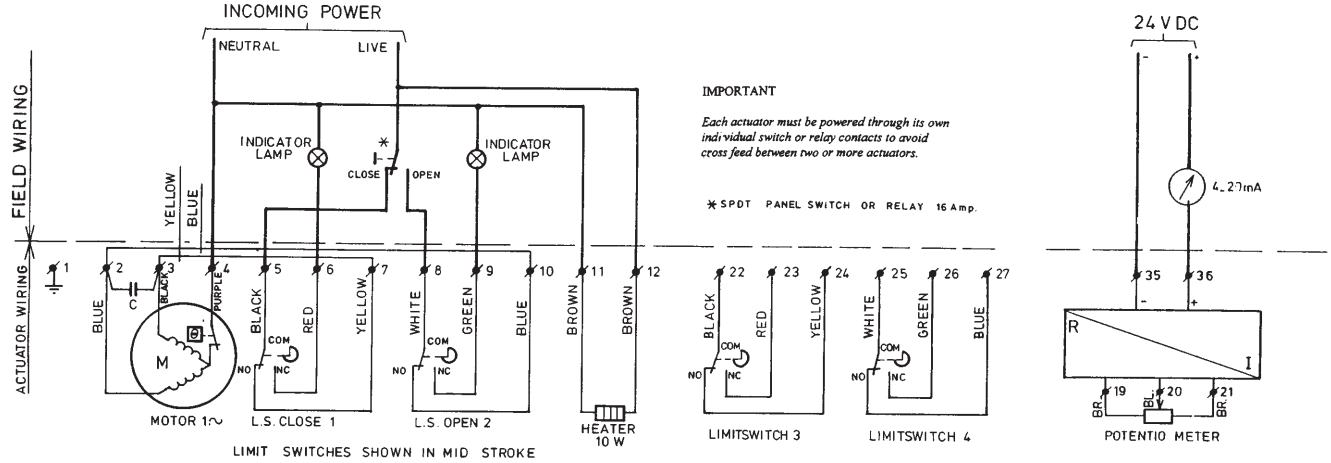

POSITION TRANSMITTER (PT4)
4 WIRE, 1 Phase ~
Drw.: EL35-337

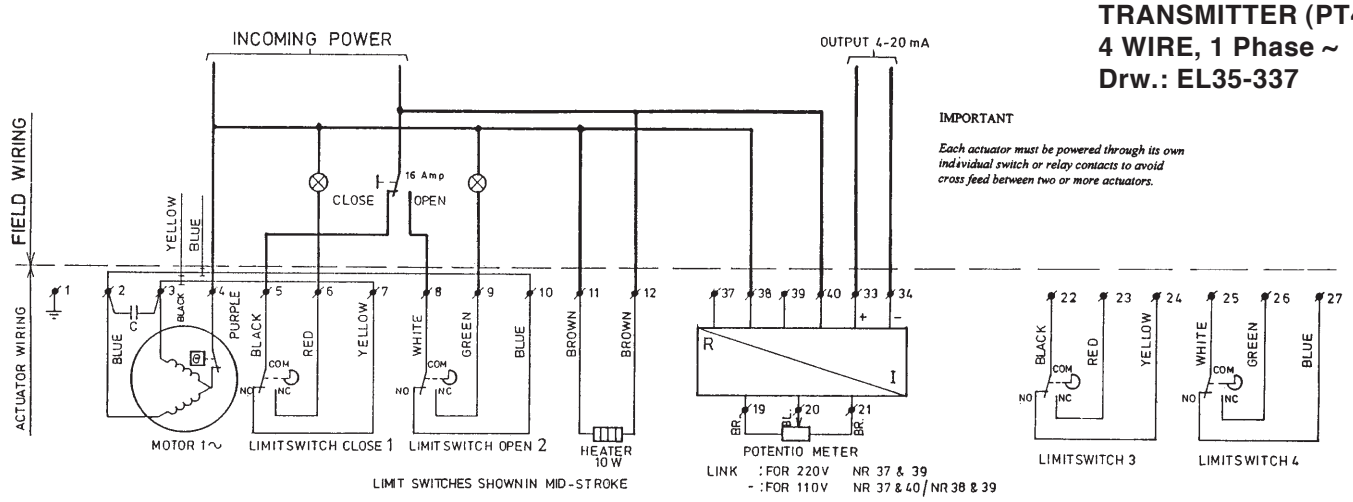

3 POSITION CONTROL (3 POS)
1 Phase ~
Drw.: EL35-161

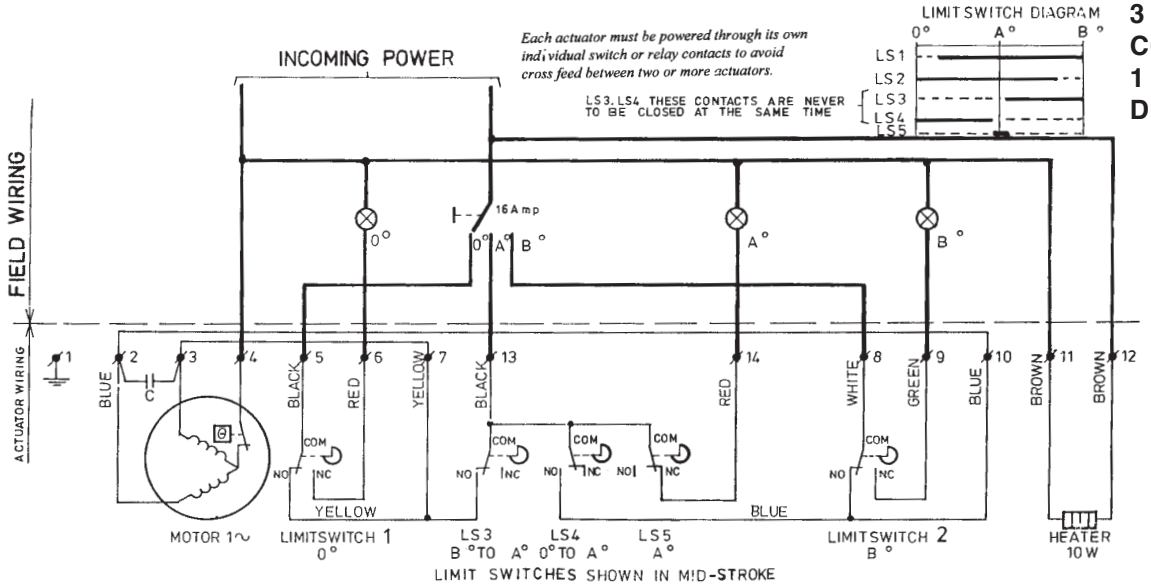

3 POSITION CONTROL (3 POS)
1 Phase ~
Drw.: EL100-118

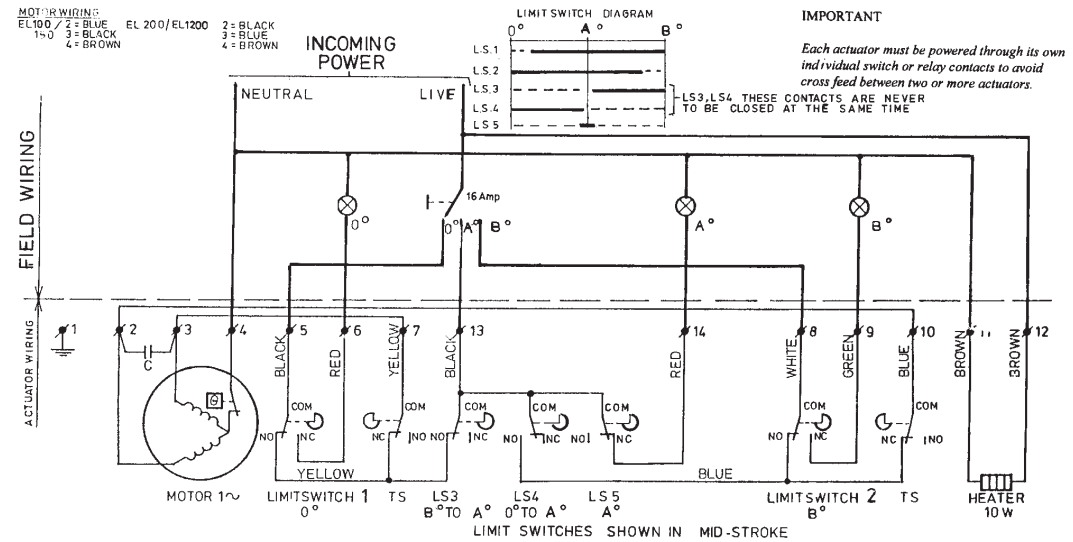

MOD POSITIONER (MOD)

1 Phase ~

Drw.: EL35-288

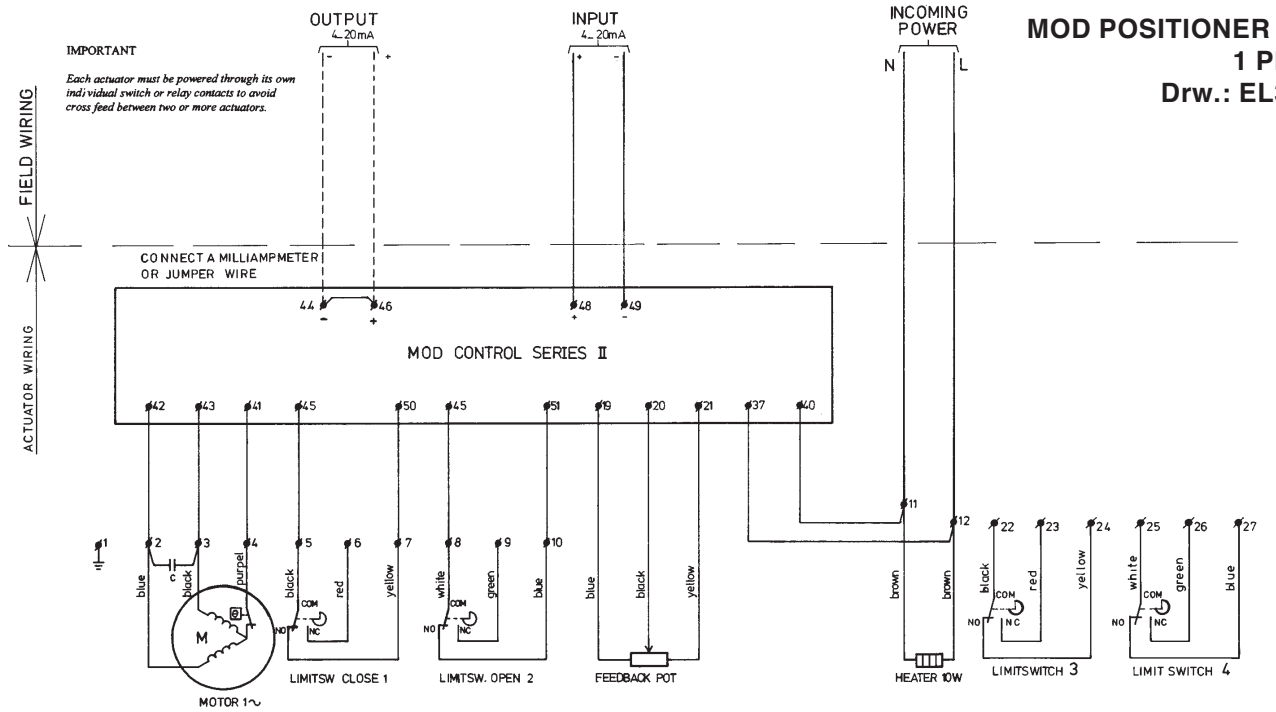

BASIC ACTUATORS

Actuator model : EL1200/2500 1 Phase ~

Drawingnr : EL2500-017

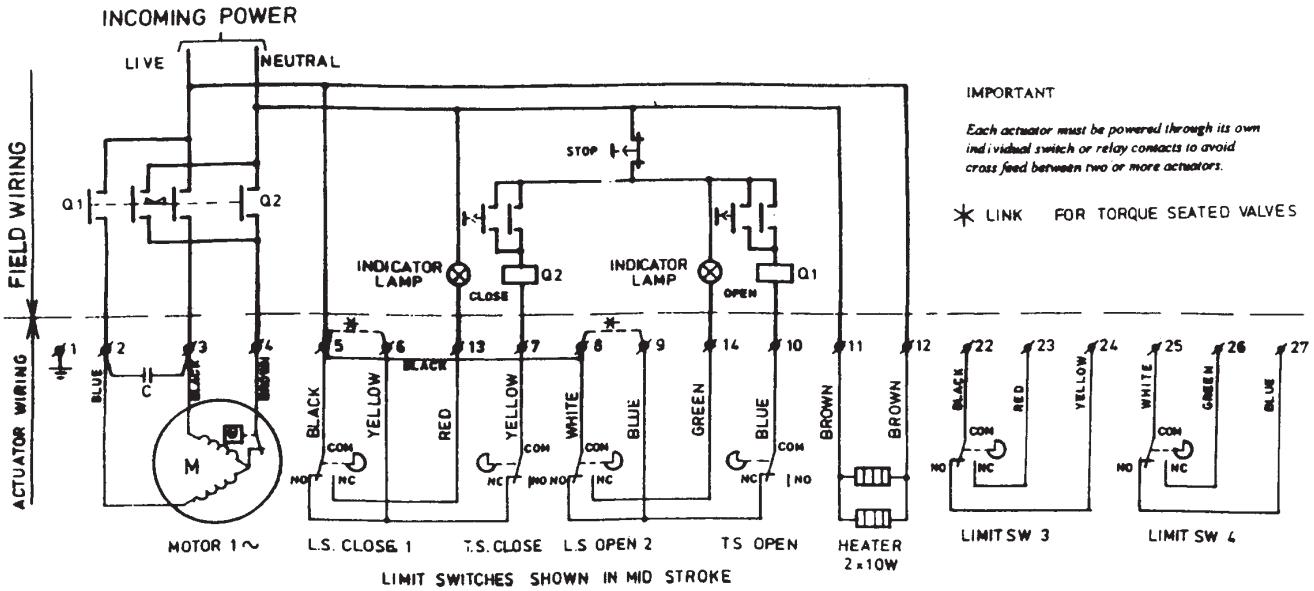

LOCAL CONTROL STATION (LC)
3 Phase ~
Drw.: EL100-395

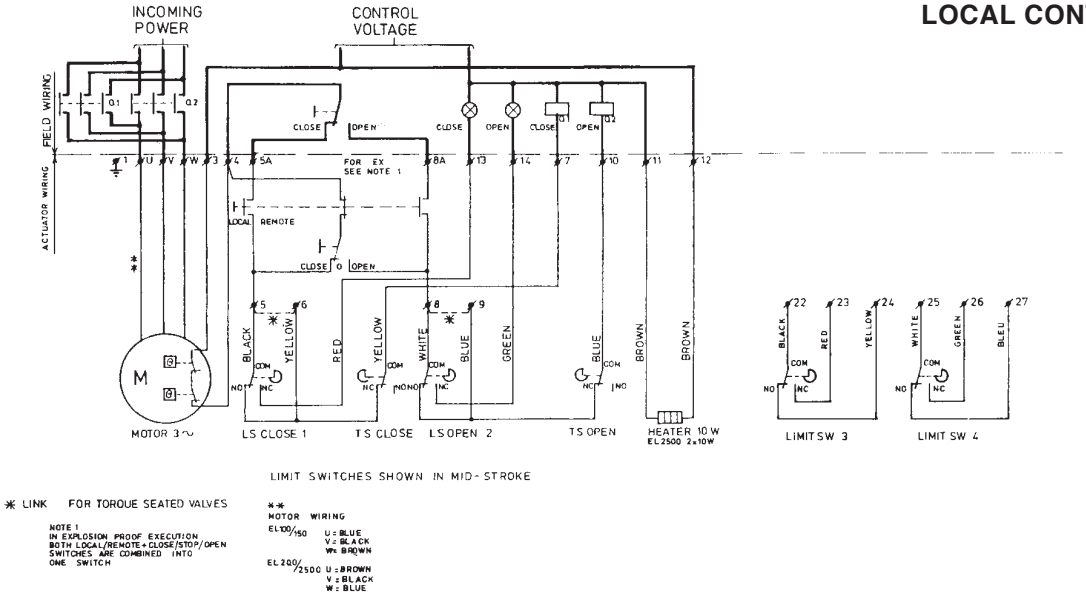

INTEGRAL CONTACTORS & LOCAL CONTROL STATION
3 Phase ~
Drw.: EL100-268

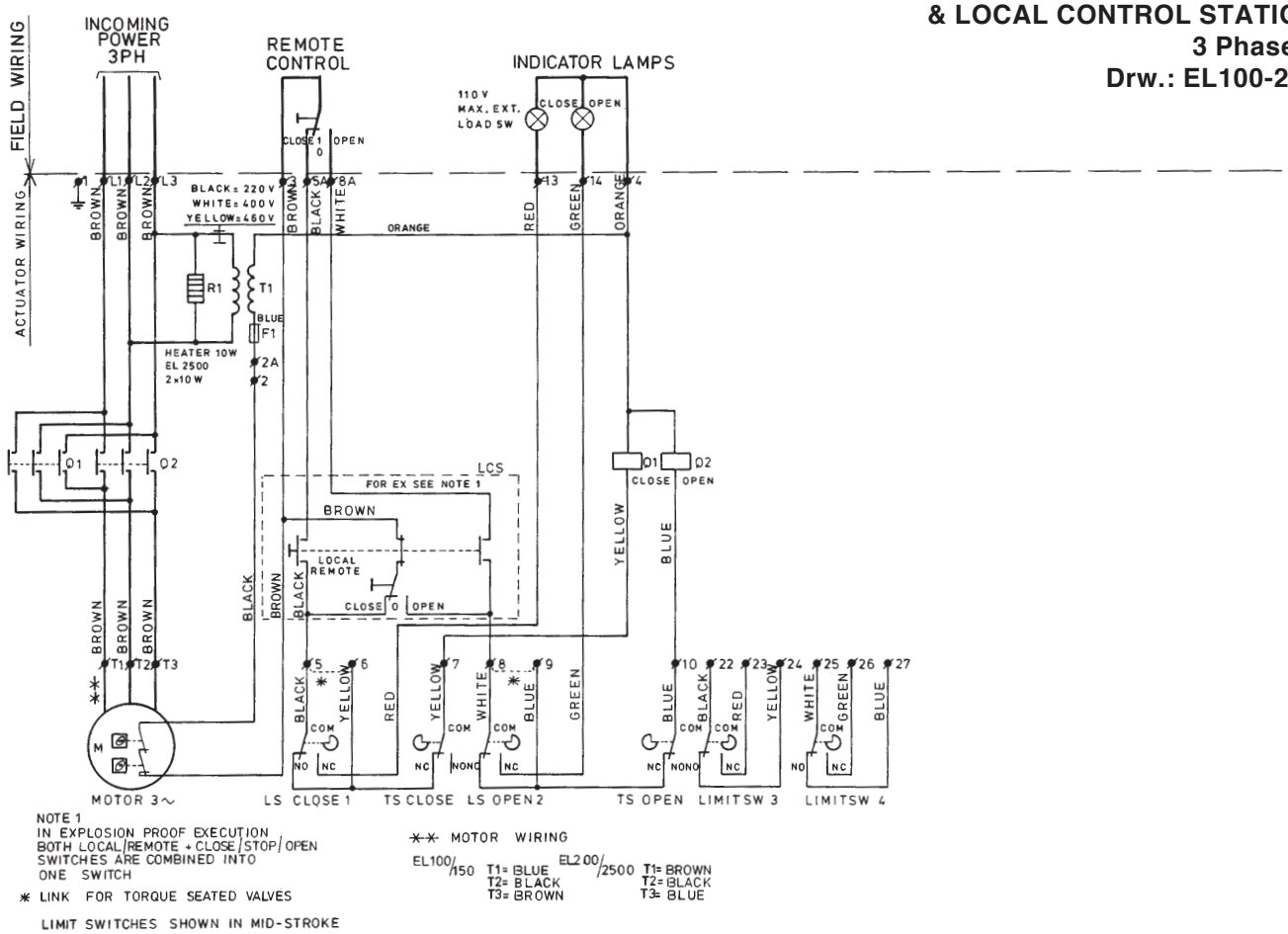

Notes

DIMENSIONS AND TECHNICAL DETAILS - ELECTRIC ACTUATOR - EL

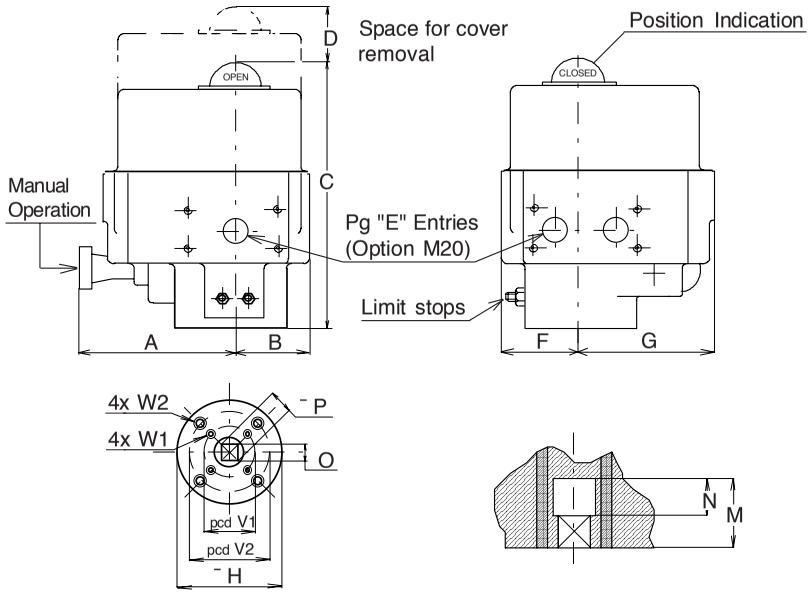

DIM. mm	EL20	EL 35/55	EL100	EL150	EL200	EL350	EL500	EL800
A	115	120/130	135	135	170	170	195	195
B	45	60	82	82	109	109	128	128
C	196	255	292	292	315	315	318	356
D	110	145	165	165	165	165	165	190
E	3x13.5	3x13.5	3x13.5	3x13.5	3x21	3x21	3x21	3x21
F	50	70	77	77	96	96	123	123
G	80	95	120	120	140,5	140,5	166	166
H	65	90	90	90	125	125	150	150
M	27.5	27.5	33	33	33	33	48	48
N	11	9	9	9	9	9	-	-
O max.	11.11	14.11	19.11	19.11	19.11	19.11	27.13	27.13
O min.	11.00	14.00	19.00	19.00	19.00	19.00	27.00	27.00
P	14	18	25	25	25	25	36	36
V1	50	50	50	50	70	70	102	125
V2	-	70	70	70	102	102	-	-
W1	M6x9	M6x12	M6x12	M6x12	M8x15	M8x15	M10x18	M12x20
W2	-	M8x15	M8x15	M8x15	M10x18	M10x18	-	-

Description

Type EL electric actuators use worm and wormwheel reduction gearing to provide tight positioning control and the self locking feature necessary for controlling larger valves, in particular butterfly valves.

The housing consists of an aluminium base casting and a steel cover, this contains the drive motor and worm gear assembly, together with the anti-condensation heater and main terminal block.

EL actuators take the full range of control options, they have handwheel geared manual overrides, mechanical end position stops and position indication by a raised dome in the top cover.

General Specification

Nominal Rotation	: 90∞ - factory set to ±3∞
	: Adjustable by limit switches: 10∞ to 320∞
Enclosure	: IP65 (IP67 optional)
Temperature range	: -20∞ to +70∞C
Electrical connection	: By 12 and/or 16 point terminal block
Finish	: Two part polyurethane all steel parts zinc plated
Life	: 50,000 cycles minimum
Limit switches	: 4x SPDT V3 micro switches
Torque switches	: 2x SPDT V3 micro switches (Not on EL-20 & EL-35)
Stall protection	: By thermostat in motor windings
Heater	: 10 Watt
Voltages	: 24VDC or 24VAC
Single phase	: 110-130V 50Hz or 60Hz
	: 220-240V50Hz or 240-280V 60Hz
Three phase	: 380-415V 50Hz or 415-460V 60Hz
Other voltages	: On request

Minimum customer switch or contactor rating 16Amp.

Materials

Housing : Aluminium alloy
Cover : Steel
Drivesleeve : Bronze (Cast Iron)
Fastenings : Stainless steel

Performance		EL20	EL35/55	EL100	EL150	EL200	EL350	EL500	EL800
Torque (Nm)	Break	20	35/55	100	150	200	350	500	800
	Run	7	20	35	53	70	123	175	280
Speed (Sec.)	50Hz	7	6	7	9	13	23	25.5	25.5
Current (A)	220V AC	0.7	-/0.6	1.7	1.7	1.7	1.7	1.7	2.3
(Max.)	110V AC	1.5	1.6/-	2.9	2.9	2.9	2.9	2.9	4.5
	24V DC	5	-/5	8	8	8	8	8	12
Power (W)	220V AC	80	72	200	200	200	200	200	305
Switches-Indication		4x16A	4x16A	4x16A	4x16A	4x16A	4x16A	4x16A	4x16A
Torque SPDT	at 110/240VAC	-	-	2x16A	2x16A	2x16A	2x16A	2x16A	2x16A
Weight (Kg.)		3	6	11	11	16,5	17	25.5	26
Duty rating		30%	30%	30%	30%	30%	30%	30%	30%

VALVE AUTOMATION SYSTEMS

EL-O-MATIC INTERNATIONAL

Nr.: 5.103

Date: July '96

All rights reserved

ELOMATIC ®

ELQ SERIES ACTUATOR

CONTENTS / INHALT / *INHOUD*

SAFETY INSTRUCTIONS AND REGULATIONS / SICHERHEITSVORSCHRIFTEN / *VEILIGHEIDSAANWIJZINGEN EN -VOORSCHRIFTEN* **3**

1 IDENTIFICATION / TYPENSCHILD / *IDENTIFICATIE* **7**

2 PRINCIPLES OF OPERATION / FUNKTIONSPRINZIP / *WERKPRINCIPES* **8**
2.1 Drive principle / Antriebsprinzip / *Aandrijvingsprincipe* 8
2.2 Manual override / Handbetrieb / *Handbediening* 9
2.3 Operation times / Betriebszeiten / *Looptijden* 10
2.4 Electronic control unit / Elektronische Steuereinheit / *Elektronische besturingseenheid* 11

3 MOUNTING THE ELQ UNIT ON A VALVE / MONTAGE DER ELQ-EINHEIT AUF EINE ARMATUR / *ELQ-AANDRIJVING OP EEN AFSLUITER MONTEREN* **13**

4 STROKE ADJUSTMENT / EINSTELLEN DES DREHWINKELS / *SLAGINSTELLING* ... **15**
4.1 Setting of switches and mechanical limit stops / Einstellen der Schalter und der mechanischen Endstops / *Schakelaars en mechanische eindaanslagen instellen* 16
4.2 Torque setting / Einstellen des Drehmoments / *Moment instellen* 19

5 CONNECTING CONTROL SIGNALS / ANSCHLIESSEN DER STEUERSIGNALE / *STUURSIGNALEN AANSLUITEN* **20**
5.1 Connecting “Open” and “Close” control signals / Anschließen der Steuersignale “Öffnen” und “Schließen” / *“Open” en “dicht” stuursignalen aansluiten* 21
5.2 Limit switches for position indicating / Endlagenschalter zur Endlagenanzeige / *Eindschakelaars voor positie-aanduiding* 22

6 CONNECTING POWER SUPPLY / ANSCHLIESSEN DER NETZSPANNUNG / *VOEDINGSSPANNING AANSLUITEN* **24**
6.1 Main fuse replacement / Auswechseln der Hauptsicherung / *Hoofdzekering vervangen* 27

7 PARTS LIST / STÜCKLISTE / *STUKLIJSTEN* ***28***

APPENDIX
A Wiring diagram / **Verdrahtungsplan** / *Bedradings diagram* 32
B Layout of Electronic Control Unit / **Übersicht über die elektronische Bedieneinheit** / Overzicht besturingseenheid 34

SAFETY INSTRUCTIONS AND REGULATIONS / SICHERHEITSVORSCHRIFTEN / *VEILIGHEIDSAANWIJZINGEN EN -VOORSCHRIFTEN*

General

EL-O-Matic accepts no liability for any damage or physical injury caused by non-compliance with the safety instructions in this manual or by carelessness during installation, operation, adjustment and maintenance of the machine. Depending on specific working conditions, additional precautions may be necessary. As EL-O-Matic has no direct control over specific machine applications, operation or maintenance conditions, it is the operator's responsibility to practice all applicable safety rules.
Please inform EL-O-Matic immediately if you have dealt with unsafe situations that have not been described. It is the sole responsibility of the operator to ensure that the local health and safety regulations are adhered to.

Allgemeines

EL-O-Matic haftet nicht für Schäden oder Verletzungen, die durch Nichtbeachtung der Sicherheitsvorschriften in dieser Anleitung oder durch Nachlässigkeit bei der Installation, dem Betrieb, dem Einstellen oder der Wartung und Instandhaltung dieser Maschine verursacht wurden. Je nach den spezifischen Arbeitsumständen sind möglicherweise weitere, ergänzende Sicherheitsmaßnahmen erforderlich. Da EL-O-Matic keinen direkten Einfluß auf die einzelnen Anwendungen der Maschine bzw. die Betriebs- und Wartungsbedingungen hat, ist der Bediener dafür verantwortlich, daß alle geltenden Sicherheitsvorschriften eingehalten werden. Bitte informieren Sie EL-O-Matic unverzüglich über Gefahrensituationen, die in dieser Anleitung nicht beschrieben wurden. Der Bediener trägt die alleinige Verantwortung dafür, daß die örtlichen Gesundheits- und Sicherheitsvorschriften eingehalten werden.

Algemeen

EL-O-Matic aanvaardt geen aansprakelijkheid voor welke schade of welk lichamelijk letsel dan ook, veroorzaakt door het niet naleven van de veiligheidsaanwijzingen in deze handleiding of door onvoorzichtigheid tijdens het installeren, bedienen, afstellen en onderhouden van de machine. Afhankelijk van de specifieke werkomstandigheden, kunnen extra voorzorgsmaatregelen noodzakelijk zijn. Aangezien EL-O-Matic geen directe controle heeft over specifieke machinetoepassingen, bedienings- of onderhoudsvoorwaarden, is het de verantwoordelijkheid van de bediener om alle van toepassing zijnde veiligheidsvoorschriften in de praktijk na te leven.
Stel EL-O-Matic direct op de hoogte als u met onveilige situaties te maken hebt gehad, die niet zijn beschreven. Het is uitsluitend de verantwoordelijkheid van de bediener om te garanderen dat de lokale gezondheids- en veiligheidsvoorschriften worden nageleefd.

Repair

- Repair work - other than the operations outlined in this manual - is strictly reserved to qualified EL-O-Matic personnel.

Warning
The electronic parts of the ELQ-actuator or the options can be damaged by a discharge of static electricity. Before you start touch a grounded metal surface to become static free.

Reparaturen

- Reparaturarbeiten, die nicht in dieser Anleitung beschrieben werden, sind ausschließlich Fachleuten von EL-O-Matic vorbehalten.

Achtung
Die elektronischen Teile des ELQ-Antriebs oder des Zubehörs können durch Entladung von statischer Elektrizität beschädigt werden. Berühren Sie daher vor Beginn der Arbeiten eine geerdete Metallfläche, so daß Sie frei von statischer Elektrizität sind.

Reparatie

- *Reparatiewerkzaamheden - behalve de werkzaamheden die in deze handleiding zijn geschetst - mogen uitsluitend door gekwalificeerd EL-O-Matic personeel worden uitgevoerd.*

Waarschuwing
De elektronische onderdelen van de ELQ-aandrijving of de optionele onderdelen kunnen worden beschadigd door een ontlading van statische elektriciteit. Raak, voordat u begint, een geaard metalen vlak aan om statisch vrij te zijn.

Storage / Lagerung / *Opslag*

Warehouse storage

- Actuators should be stored in a clean, dry warehouse free from excessive vibration and rapid temperature change.
- Actuators should not be stored on any floor surface.
- In areas of high humidity the actuator should have a packet of desiccant placed in the motor compartment, (this will absorb excessive moisture).

On site storage

- Actuators should be stored in a clean, dry location free from excessive vibration and rapid temperature change.
- Ensure all actuator covers are in place and securely fastened.
- If power is not available, place a packet of desiccant in the motor compartment (replace and securely fasten cover).
- Replace plastic conduit plugs with appropriate pipe plugs.

Lagerung im Lager

- Antriebe sind in einem sauberen, trockenen Lager ohne starke Schwingungen und schnelle Temperaturwechsel zu lagern.
- Antriebe nicht auf dem Boden lagern.
- In Gegenden mit hoher Luftfeuchtigkeit ist der Antrieb mit einem Päckchen Trockenmittel im Motorgehäuse zu lagern (dies absorbiert übermäßige Feuchtigkeit).

Lagerung vor Ort

- Antriebe sind an einem sauberen, trockenen Ort ohne starke Schwingungen und schnelle Temperaturwechsel zu lagern.
- Sorgen Sie dafür, daß alle Abdeckungen des Antriebs angebracht und gut befestigt sind.
- Wenn kein Strom vorhanden ist, legen Sie ein Päckchen Trockenmittel in das Motorgehäuse (setzen Sie die Abdeckung wieder auf und befestigen Sie sie gut).
- Ersetzen Sie die Kunststoffstopfen in den Kabeleinführungen durch entsprechende Rohrleitungsstopfen.

Opslag in magazijn

- *Aandrijvingen dienen in een schoon, droog magazijn te worden opgeslagen, vrij van overmatige trillingen en snelle temperatuurschommelingen.*
- *Aandrijvingen mogen niet op welk vloeroppervlak dan ook worden opgeslagen.*
- *Op plaatsen met een hoge vochtigheid dient een pakje met droogmiddel in de motorkamer van de aandrijving te worden geplaatst (dit zal overmatig vocht absorberen).*

Opslag ter plekke

- *Aandrijvingen dienen op een schone, droge plek te worden opgeslagen, vrij van overmatige trillingen en snelle temperatuurschommelingen.*
- *Zorg ervoor dat alle afdekkingen van de aandrijving op hun plaats zitten en stevig zijn bevestigd.*
- *Als er geen stroom is, plaats dan een pakje met droogmiddel in de motorkamer (plaats afdekking opnieuw en zet deze stevig vast).*
- *Vervang kunststof leidingpluggen door geschikte buispluggen.*

Note
Failure to follow proper storage guidelines will void warranty.

Lubrication
Lubrication is not needed. El-O-Matic utilises a permanently lubricated gear case and is lubricated for the normal life at the actuator.

Hinweis
Bei Nichtbeachten der Lagervorschriften wird die Garantie nichtig.

Schmierung
Der Antrieb braucht nicht geschmiert zu werden. El-O-Matic verwendet ein Getriebe mit Dauerschmierung, daß für die normale Lebensdauer des Antrieb ausreichend ist.

Opmerking
Bij het niet opvolgen van de juiste opslagaanwijzingen vervalt de garantie.

Smering
Smering is niet nodig. El-O-Matic maakt gebruik van een permanent gesmeerde overbrengingskast die is gesmeerd voor de normale levensduur van de aandrijving.

1 IDENTIFICATION / TYPENSCHILD / *IDENTIFICATIE*

1.1.1

Weatherproof version / **Wettergeschützte Ausführung** / *Weerbestendige uitvoering*

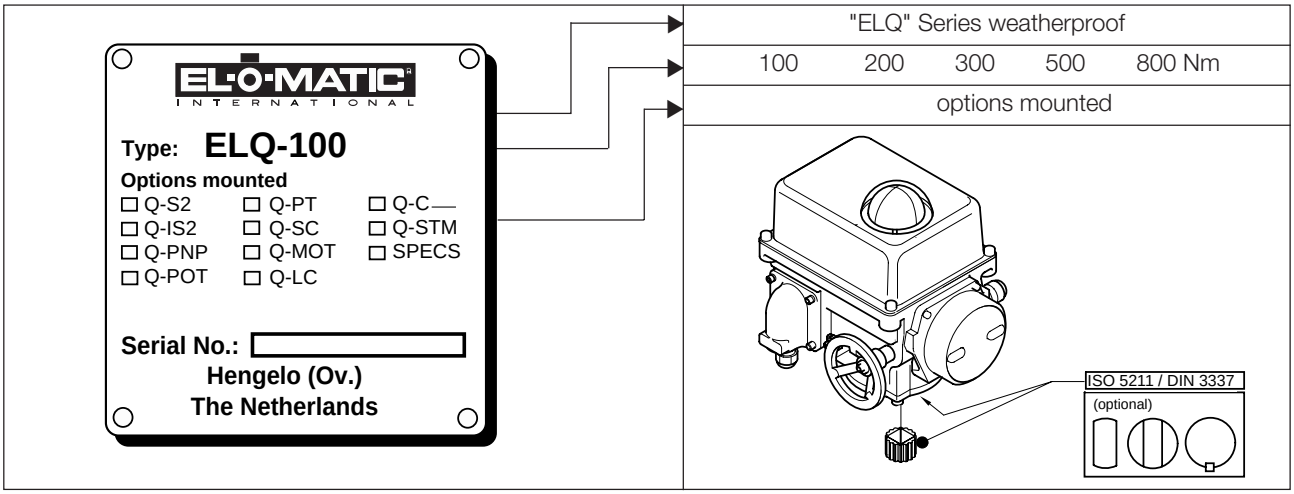

1.1.1

1.1.2

Explosionproof version / **Explosionsgeschützte Ausführung** / *Explosievaste uitvoering*

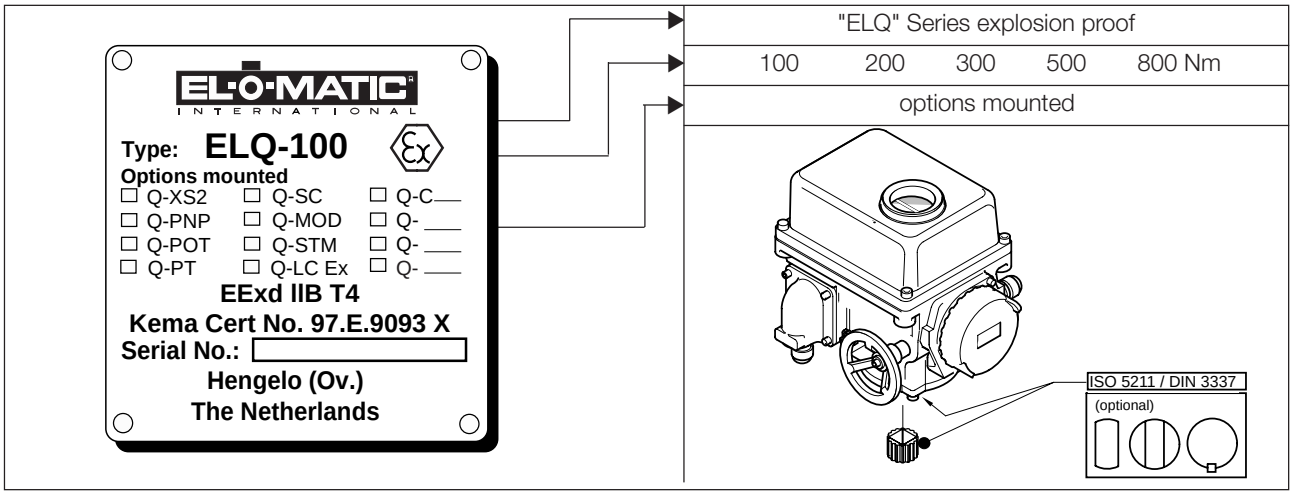

1.1.2

Warning

Actuator must be isolated electronically before any (dis)assembly is begun. Before mounting or (dis)assembling the actuator consult the relevant sections of this manual.

Achtung

Vor dem Zusammen- oder Auseinanderbau muß der Antrieb elektronisch getrennt sein. Lesen Sie vor dem Zusammen- oder Auseinanderbau des Antriebs die betreffenden Abschnitte in dieser Anleitung.

Waarschuwing

Aandrijving moet elektronisch geïsoleerd worden, voordat deze wordt ge(de)monteerd. Raadpleeg de relevante delen van deze handleiding, alvorens de aandrijving te (de)monteren.

2 PRINCIPLES OF OPERATION / FUNKTIONSPRINZIP / *WERKINGSPRINCIPES*

2.1 Drive principle / Antriebsprinzip / *Aandrijvingsprincipe*

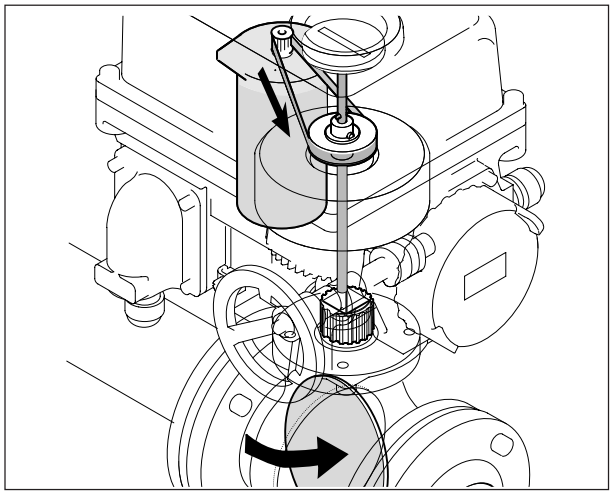

2.1.1

2.1.1

Control signal “open”: counter-clockwise rotation, valve opens.

Steuersignal ”offen”: Drehung gegen den Uhrzeigersinn, Armatur öffnet.

Stuursignaal “open”: rotatie tegen de wijzers van de klok in, afsluiter gaat open.

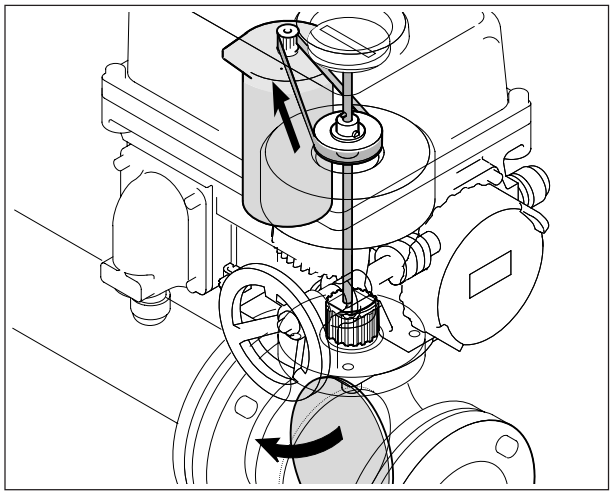

2.1.2

2.1.2

Control signal “closed”: clockwise rotation, valve closes.

Steuersignal ”geschlossen”: Drehung im Uhrzeigersinn, Armatur schließt.

Stuursignaal “dicht”: rotatie met de wijzers van de klok mee, afsluiter gaat dicht.

2.2 Manual override / Handbetrieb / *Handbediening*

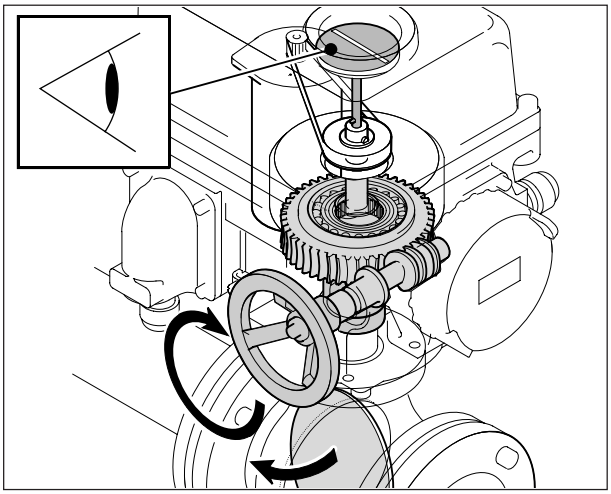

2.2.1

2.2.1

To operate the manual override during power failure or setting use the handwheel. You do not need to engage or disengage the manual override before manual operation.
The handwheel does not rotate during power operation.
Turn the handwheel clockwise to close the valve. Turn the handwheel counter-clockwise to open the valve.

Zur Betätigung von Hand bei einem Stromausfall oder zur Justage benutzen Sie das Handrad. Vor dem Wechsel auf Handbetrieb brauchen Sie das Handrad nicht zu aktivieren bzw. ein- oder auszukuppeln.
Das Handrad läßt sich während des Betriebs mit Strom nicht drehen. Zum Schließen der Armatur drehen Sie das Handrad im Uhrzeigersinn. Zum Öffnen der Armatur drehen Sie das Handrad gegen den Uhrzeigersinn.

Gebruik het handwiel voor handbediening bij stroomstoring of instelwerkzaamheden. U hoeft de handbediening niet in of uit te koppelen, alvorens over te schakelen op handbediening.
Het handwiel draait niet mee als de aandrijving elektrisch bediend wordt.
Draai het handwiel met de wijzers van de klok mee om de afsluiter te sluiten. Draai het handwiel tegen de wijzers van de klok in om de afsluiter te openen.

2.3 Operation times / Betriebszeiten / *Looptijden*

	English	Deutsch	Nederlands
B	Break torque	Loßreißmoment	Losbreekmoment
R	Run torque	Laufdrehmoment	Loopmoment
S	Seating torque	Schließmoment	Aanzetmoment zitting

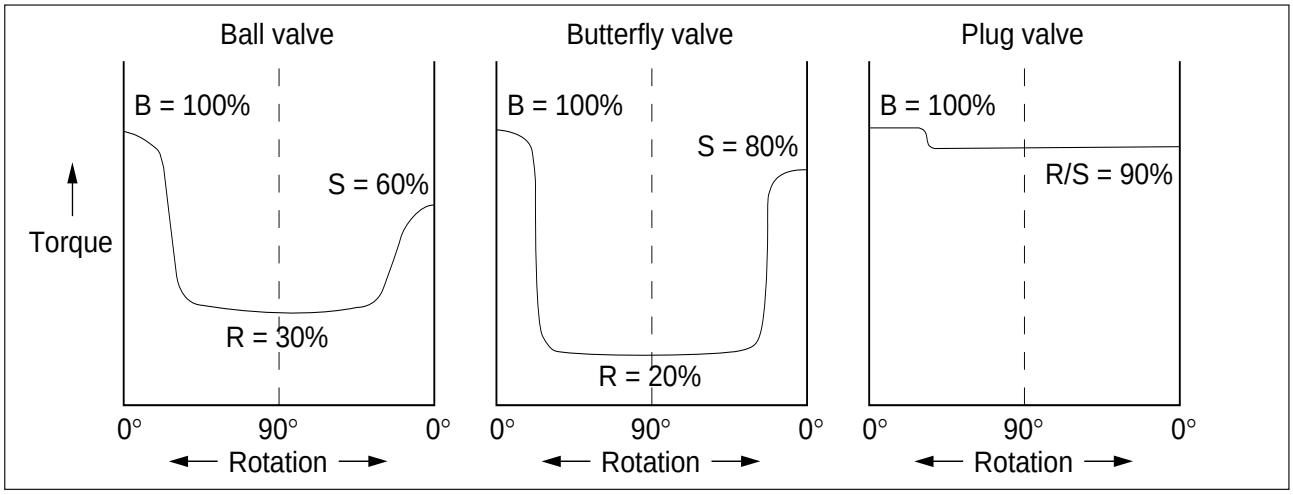

2.3.1

Operating time (in sec.)		
	No load	Max. load
ELQ 100	6	10
ELQ 200	8	14
ELQ 300	13	18
ELQ 500	17	22
ELQ 800	28	36

Operating time	- Betriebszeit	- Looptijd
(in sec.)	- (in Sek.)	- (in sec.)
No load	- unbelastet	- geen belasting
Max. load	- Höchstbelastung	- max. belasting

2.3.1

Operation times are nominal. The actual operation time will vary depending on the torque characteristic of the valve. For other operating times see speed control option.

Bei den Betriebszeiten handelt es sich um Nennwerte. Die wirkliche Betriebszeit hängt von der Drehmomentkurve der Armatur ab. Weitere Betriebszeiten finden sich beim Zubehör für die Geschwindigkeitsregelung.

Looptijden zijn nominaal. De werkelijke looptijd zal afhankelijk van de momentkarakteristiek van de afsluiter variëren. Zie voor andere looptijden de optionele snelheidsregeling.

2.4 Electronic control unit / Elektronische Steuereinheit / *Elektronische besturingseenheid*

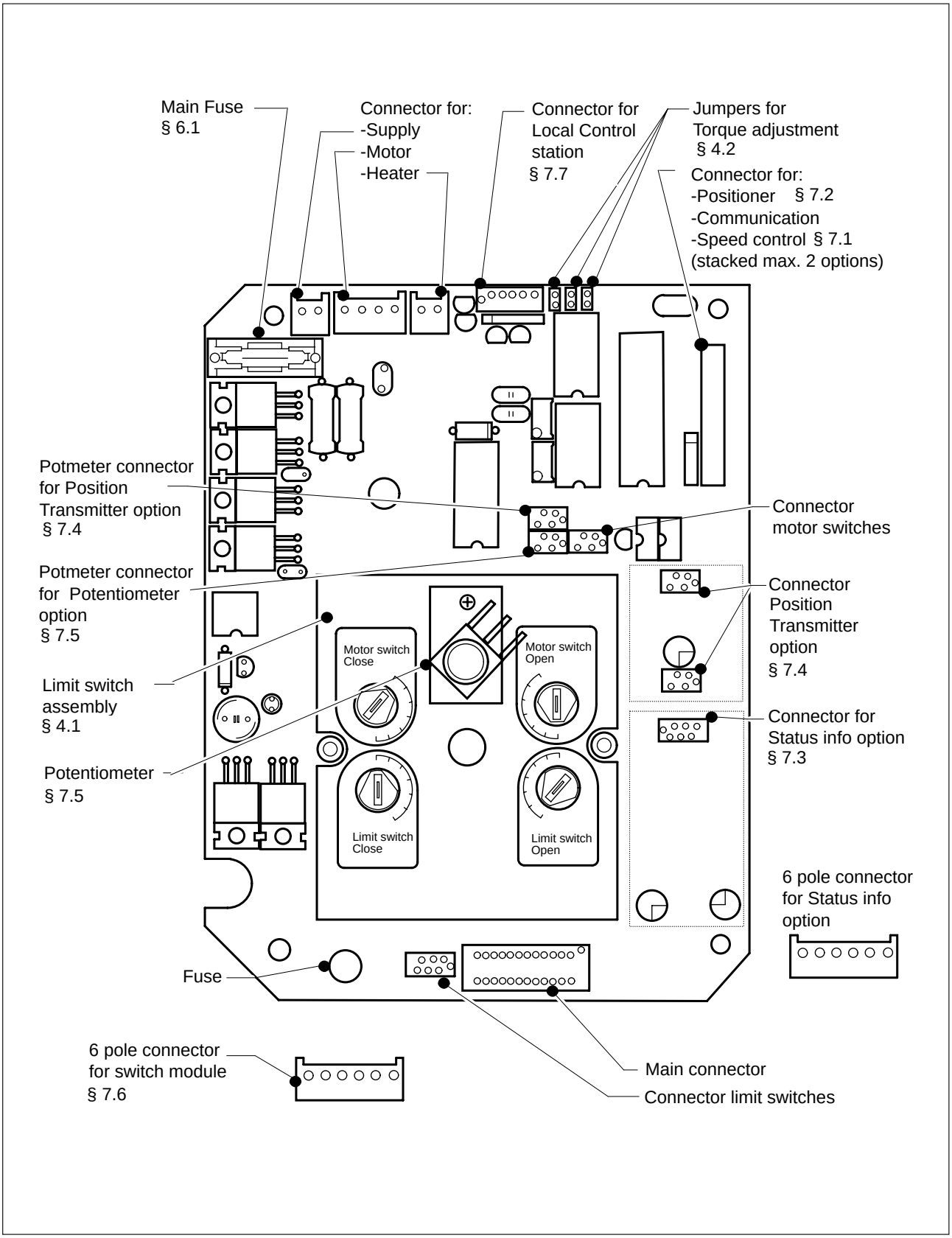

2.4.1 Layout of basic print / Anordnung der Basis-Leiterplatte / *Layout van basisprintplaat*

Warning
The electronic parts of the ELQ-actuator or the options can be damaged by a discharge of static electricity. Before you start touch a grounded metal surface to become static free.

Achtung
Die elektronischen Teile des ELQ-Antriebs oder des Zubehörs können durch Entladung von statischer Elektrizität beschädigt werden. Berühren Sie daher vor Beginn der Arbeiten eine geerdete Metallfläche, so daß Sie frei von statischer Elektrizität sind.

Waarschuwing
De elektronische onderdelen van de ELQ-aandrijving of de optionele onderdelen kunnen worden beschadigd door een ontlading van statische elektriciteit. Raak, voordat u begint, een geaard metalen vlak aan om statisch vrij te zijn.

3 MOUNTING THE ELQ UNIT ON A VALVE / MONTAGE DER ELQ-EINHEIT AUF EINE ARMATUR / *ELQ-AANDRIJVING OP EEN AFSLUITER MONTEREN*

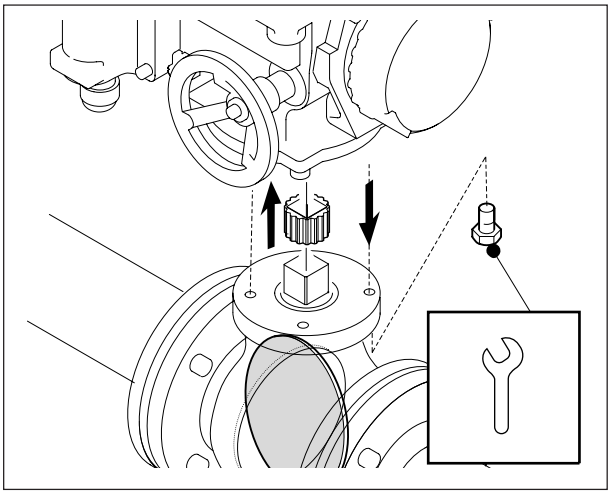

3.0.1

Remove handle nut, handle, lockwasher, etc. from valve if required. Check position of valve.

There are two possibilities for mounting the ELQ unit:

- Direct mounting.
- Bracket mounting.

3.0.1

Direct mounting

Place insert in bottom flange of actuator.

Entfernen Sie gegebenenfalls die Handbetätigung von der Armatur. Kontrollieren Sie die Position der Armatur.

Die ELQ-Einheit kann auf zwei verschiedene Weisen aufgebaut werden:

- direkter Aufbau
- Aufbau mit Montagesatz

3.0.1

Direkter Aufbau

Stecken Sie den Kupplungseinsatz in die Antriebswelle.

Verwijder indien nodig hendelmoer, hendel, veerring etc. van de afsluiter. Controleer de positie van de afsluiter.

Er zijn twee mogelijkheden voor het monteren van de ELQ-aandrijving:

- *Direct monteren.*
- *Monteren met opbouwset.*

3.0.1

Direct monteren

Plaats insert in onderflens van aandrijving.

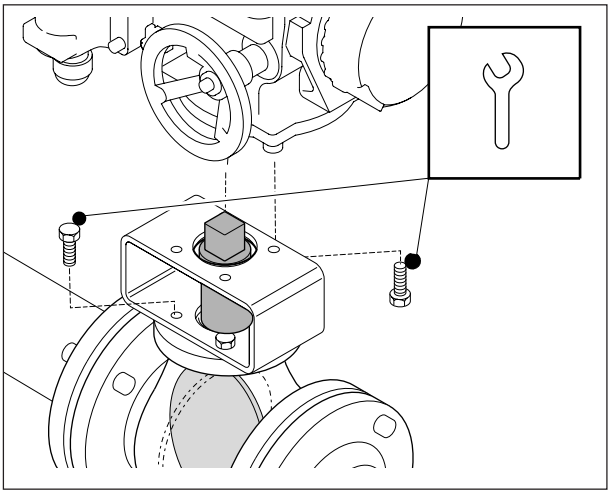

3.0.2

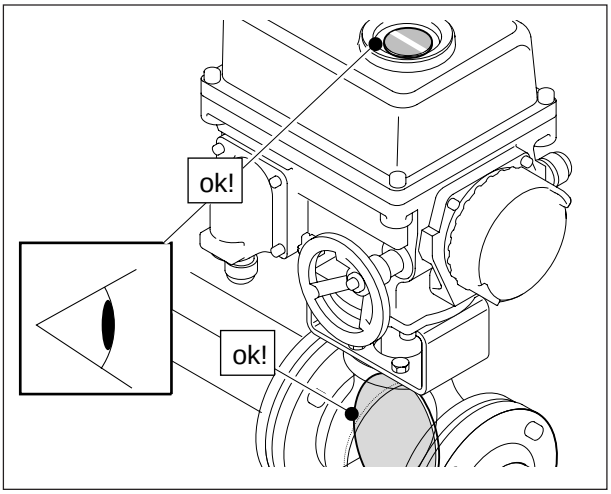

3.0.3

3.0.2

Bracket mounting

Mount bracket and adaptor on valve.
Place insert in bottom flange at actuator.

3.0.3

Valves are manufactured so that they operate in only one 90 degree segment. The actuator should be mounted for counterclock-wise rotation to open and clockwise to close the valve.

Aufbau mit Montagesatz

Setzen Sie die Konsole und die Kupplung auf die Armatur. Stecken Sie den Kupplungseinsatz in die Antriebswelle.

3.0.3

Die Armaturen sind so konstruiert, daß sie nur innerhalb eines 90°-Winkels wirksam sind. Der Antrieb sollte so montiert werden, daß eine Drehung gegen den Uhrzeigersinn die Armatur öffnet und daß eine Drehung im Uhrzeigersinn die Armatur schließt.

Monteren met opbouwset

Monteer beugel en koppelstuk op afsluiter.
Plaats insert in onderflens van afsluiter.

3.0.3

Afsluiters zijn zodanig geconstrueerd dat deze alleen in een segment van 90 graden werken. Bevestig de aandrijving zo dat bij rotatie tegen de wijzers van de klok in de afsluiter wordt geopend en bij rotatie met de wijzers van de klok mee de afsluiter wordt gesloten.

4 STROKE ADJUSTMENT / EINSTELLEN DES DREHWINKELS / *SLAGINSTELLING*

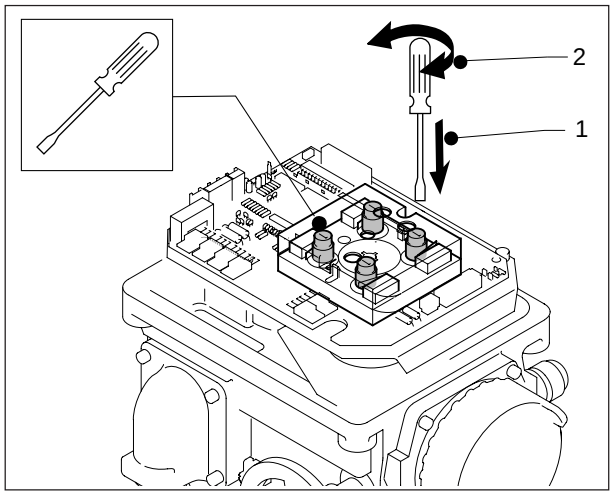

4.0.1

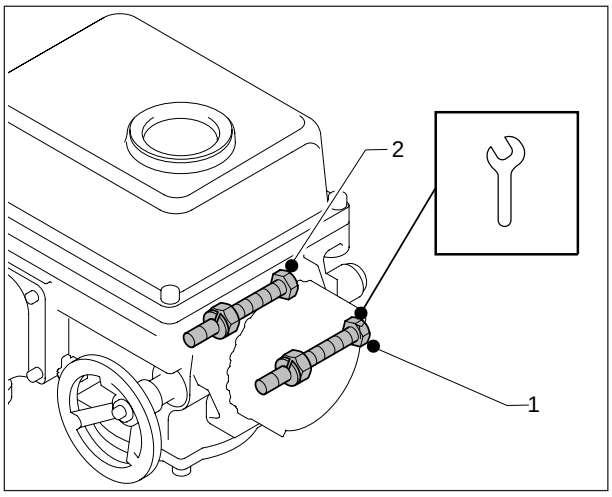

4.0.2

The ELQ-series actuators have two ways of limiting the stroke:

Die Drehwinkeleinstellung der ELQ-Antriebe können auf zwei verschiedene Weisen realisiert werden.

De aandrijvingen van de ELQ-serie hebben twee manieren van slagbegrenzing:

4.0.1

Electrically limiting the stroke by motor limit switch setting.

Elektrische Begrenzung des Drehwinkels durch die Motorendschalter.

Elektronische slagbegrenzing door instelling van motoreindschakelaar.

4.0.2

Mechanically limiting the stroke by limit stop screws (when the actuator is under manual operation).

1. open
2. closed

Mechanische Begrenzung des Drehwinkels durch Anschlagschrauben (diese Justierung ist nur im Handbetrieb möglich).

1. **offen**
2. **geschlossen**

Mechanische slagbegrenzing door eindaanslag-bouten (als de aandrijving handmatig wordt bediend).

1. *open*
2. *dicht*

4.1 Setting of switches and mechanical limit stops / Einstellen der Schalter und der mechanischen Endstops / *Schakelaars en mechanische eindaanslagen instellen*

The nominal rotation of the ELQ-actuator is factory set. If desired adjust the motor and limit switches and the mechanical limit stops after installing the ELQ-actuator on the valve.
(For connecting limit switch signals for position indication, see § 5.2)

Die Nenndrehung des ELQ-Antriebs wurde im Werk eingestellt. Gegebenenfalls lassen sich die Motor- und Grenzschalter und die mechanischen Begrenzungen nach dem Einbau des ELQ-Antriebs auf der Armatur ändern. (Hinweise zum Anschließen der Grenzschaltersignale für die Positionsanzeige finden Sie in Abschnitt 5.2.)

De nominale rotatie van de ELQ-aandrijving is in de fabriek afgesteld. Naar wens kunt u de motor- en eindschakelaars en de mechanische eindaanslagen afstellen, nadat u de ELQ-aandrijving op de afsluiter hebt gemonteerd. (Voor het aansluiten van eindschakelaarsignalen voor positie-aanduiding, zie § 5.2)

Factory settings nominal rotation		
Motor and limit switches	90°	+ 1° at each end
Mechanical limit stops	90°	+ 5° at each end

Factory settings nominal rotation	- Werkseinstellungen für Nenndrehung	- Fabrieksafstellingen nominale rotatie
Motor and limit switches	- Motor- und Grenzschalter	- Motor- en eindschakelaars
Mechanical limit stops	- mechanische Anschläge	- Mechanische eindaanslagen
+ 1° at each end	- + 1° in jeder Endlage	- + 1° op elk einde
+ 5° at each end	- + 5° in jeder Endlage	- + 5° op elk einde

Warning
During operation the sequence of reaching the various switches/stops at the end of stroke is;
1e Limit switches
2e Motor switches
3e Limit stops

Achtung
Während des Betriebs erreichen die verschiedenen Schalter bzw. Anschläge in folgender Reihenfolge das Ende ihres Hubs:
1. **Endlagenschalter**
2. **Motorschalter**
3. **Endstops**

Waarschuwing
Tijdens bedrijf is de volgorde van het bereiken van de verschillende schakelaars/aanslagen aan het einde van de slag als volgt;
1e eindschakelaars
2e motorschakelaars
3e mechanische eindaanslagen

Procedure:
1. Mount the actuator onto a valve.

Open:
2. Move the valve away from the fully open position with the manual override hand wheel.
3. Turn the “open” mechanical stop screw out (CCW) 4 turns.
4. Move the valve to the fully open position with the manual override hand wheel.
5. Turn “motor switch open”-cam (CW) until switch trips.

For position indication set the limit switches as follows:
Turn “Limit switch open”-cam (CW) until switch trips.

6. Turn the “open” mechanical stop screw in (CW) until an obstruction is felt (do not force) then back-off 3 turns and lock the mechanical stop screw with the locknut.

Vorgehensweise:
1. Bauen Sie den Antrieb auf eine Armatur.

Offen:
2. Drehen Sie die Armatur mit der Handradbetätigung des Antrieb aus die Position “AUF”.
3. Drehen Sie die mechanische Anschlagschraube “offen” 4 Umdrehungen (gegen den Uhrzeigersinn) heraus.
4. Drehen Sie die Armatur mit der Handradbetätigung des Antriebs in die Position “AUF”.
5. Drehen Sie den Schaltnocken “Motorschalter offen” (im Uhrzeigersinn), bis der Kontakt unterbricht.

Für die Endlageanzeige stellen Sie die Endlagenschalter folgendermaßen ein:
Drehen Sie den Schaltnocken “Endlagenschalter offen” (im Uhrzeigersinn), bis der Kontakt unterbricht.

6. Drehen Sie die mechanische Anschlagschraube “offen” (im Uhrzeigersinn) hinein, bis Sie einen Widerstand spüren (nicht forcieren), drehen Sie sie dann 3 Umdrehungen zurück und kontern Sie dann die Anschlagschraube mit der Kontermutter.

Handelwijze:
1. Monteer de aandrijving op de afsluiter.

Open:
2. Draai de afsluiter weg van de volledig geopende positie met handwiel van de handbediening.
3. Draai de “open” mechanische eindaanslagbout (CCW) 4 omwentelingen naar buiten.
4. Draai de afsluiter naar de volledig geopende positie met het handwiel van de handbediening.
5. Draai “motor schakelaar open”-nok (CW) totdat de schakelaar wordt geactiveerd.

Stel voor de positie-aanduiding de eindschakelaars als volgt in:
Draai “eindschakelaar open”-nok (CW) totdat de schakelaar wordt geactiveerd.

6. Draai de “open” mechanische eindaanslagbout naar binnen (CW), totdat u een blokkering voelt (oefen geen kracht uit), draai deze vervolgens drie omwentelingen terug en zet de mechanische eindaanslagschroef met de borgmoer vast.

Closed:

7. Move the valve to about 15° before the fully “closed” position with the manual override hand wheel.
8. Turn the “closed” mechanical stop screw out (CCW) 4 turns.
9. Move the valve to the fully closed position with the manual override hand wheel.
10. Turn “Motor switch closed”-cam (CCW) until switch trips.
    For position indication set the limit switches as follows:
    Turn “Motor switch closed”-cam (CCW) until switch trips.
11. Turn the “Closed” mechanical stop screw in (CW) until an obstruction is felt (do not force) then back-off 3 turns and lock the mechanical stop screw with the locknut.

Geschlossen:

7. Drehen Sie die Armatur mit der Handradbetätigung des Antriebs bis etwa 15° vor die Position “ZU”.
8. Drehen Sie die mechanische Anschlagschraube “Geschlossen” 4 Umdrehungen (gegen den Uhrzeigersinn) heraus.
9. Drehen Sie die Armatur mit der Handradbetätigung des Antriebs in die Position “ZU”.
10. Drehen Sie die Schaltnocken “Motorschalter geschlossen” (gegen den Uhrzeigersinn), bis der Kontakt unterbricht.
    Für die Endlageanzeige stellen Sie die Endlagenschalter folgendermaßen ein:
    Drehen Sie den Schaltnocken “Endlagenschalter geschlossen” (gegen den Uhrzeigersinn), bis der Kontakt unterbricht.
11. Drehen Sie die mechanische Anschlagschraube “Geschlossen” (im Uhrzeigersinn) hinein, bis Sie einen Widerstand spüren (nicht forcieren), drehen Sie sie dann 3 Umdrehungen zurück und kontern Sie dann die mechanische Anschlagschraube mit der Kontermutter.

Dicht:

7. *Draai de afsluiter naar ongeveer 15° voor de volledig “gesloten” positie met het handwiel van de handbediening.*
8. *Draai de “gesloten” mechanische eindaanslagbout (CCW) 4 omwentelingen naar buiten.*
9. *Draai de afsluiter naar de volledig gesloten positie met het handwiel van de handbediening.*
10. *Draai de “motorschakelaar gesloten”-nok (CCW), totdat de schakelaar wordt geactiveerd.*
    Stel voor de positie-aanduiding de eindschakelaars als volgt in:
    Draai “motorschakelaar gesloten”-nok (CCW), totdat de schakelaar wordt geactiveerd.
11. *Draai de “gesloten” mechanische eindaanslagbout naar binnen (CW) totdat u een blokkering voelt (oefen geen kracht uit), draai deze vervolgens drie omwentelingen terug en zet de mechanische eindaanslagschroef met de borgmoer vast.*

4.2 Torque setting / Einstellen des Drehmoments / *Moment instellen*

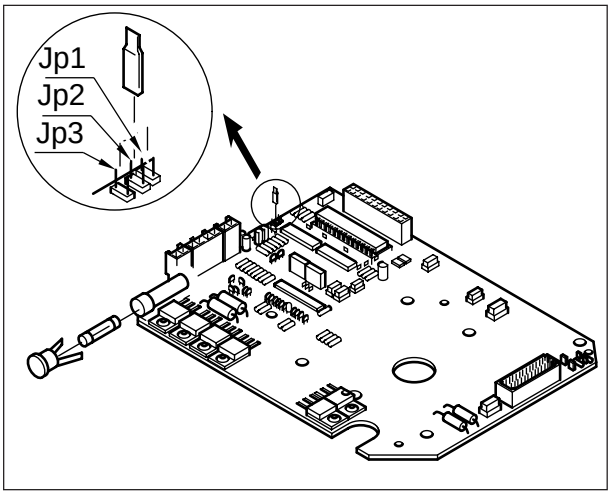

4.2.1

4.2.1

Warning
Be sure that the jumper is placed at one of the three jumper positions.

The ELQ is factory set at its maximum output torque. The output torque can be reduced by means of a jumper (see table 4.2.2).

Achtung
Überzeugen Sie sich davon, daß sich der Jumper sich in einem der drei Jumpersteckplätze befindet.

Der ELQ wurde im Werk auf den Höchstwert für das Ausgangsdrehmoment eingestellt. Das Ausgangsdrehmoment kann durch umstecken eines Jumpers verringert werden (siehe Tabelle 4.2.2).

Waarschuwing
Zorg ervoor dat de jumper op een van de drie jumperposities is geplaatst.

De ELQ is in de fabriek al afgesteld op het maximale uitgangsmoment.
Dit uitgangsmoment kan gereduceerd worden door middel van een jumper
(zie tabel 4.2.2).

Jumper setting maximum torque			
Actuator	Jp1 (Nm)	Jp2 (Nm)	Jp3 Nm)
ELQ 100	100	80	55
ELQ 200	200	160	130
ELQ 300	300	250	210
ELQ 500	500	430	360
ELQ 800	800	700	600

Jumper setting maximum torque	- Jumper-Einstellung für Drehmoment-Höchstwert	- Jumper-instelling maximaal moment
Actuator	- Antrieb	- Aandrijving

5 CONNECTING CONTROL SIGNALS / ANSCHLIESSEN DER STEUERSIGNALE / *STUURSIGNALEN AANSLUITEN*

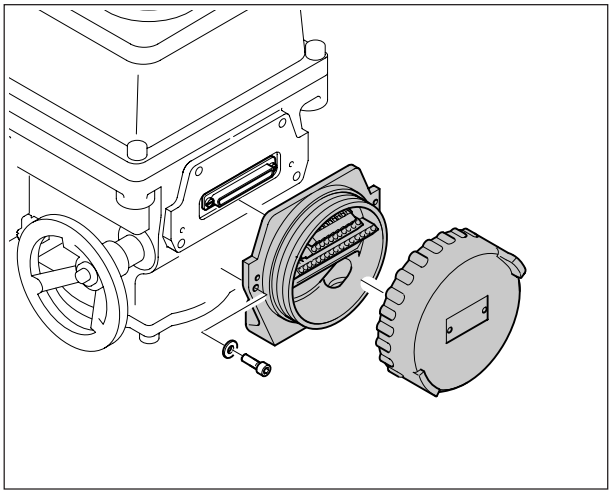

5.0.1

5.0.1

Note
Before connecting the power supply connect all options properly (see option instructions).

Warning
Terminal compartment must be electronically isolated before any disassembly is begun.

The ELQ-actuator has a terminal compartment with a plug connector for control signals.

All control signals can be connected to the terminals inside this compartment. In case of maintenance or replacement of the valve/actuator unit, the terminal compartment can be unplugged from the ELQ-actuator and plugged into an other actuator. You do not need to reconnect all the control wiring.

Hinweis
Vor dem Anschließen der Netzspannung muß das Zubehör richtig angeschlossen sein (siehe die Anweisungen für das Zubehör).

Achtung
Vor dem Auseinanderbau muß das Anschlußgehäuse elektronisch getrennt werden.

Der ELQ-Antrieb hat ein Anschlußgehäuse mit einem Anschlußstecker für Steuersignale. Alle Steuersignale können an die Klemmleisten in diesem Gehäuse angeschlossen werden. Bei Wartungsarbeiten oder beim Auswechseln der Armatur/Antriebs-Einheit, kann das Anschlußgehäuse vom ELQ-Antrieb abgezogen und mittels eines vorhandenen Stecker an einen anderen Antrieb angebracht werden. Dadurch entfällt ein erneutes Anschließen der Steuerkabel.

Opmerking
Sluit alle optionele onderdelen correct aan, alvorens de voedingsspanning aan te sluiten (zie aanwijzingen optionele onderdelen).

Waarschuwing
Klemmenbehuizing moet elektronisch geïsoleerd worden, alvorens met demonteren te beginnen.

De ELQ-aandrijving heeft een klemmenbehuizing met een stekerverbinding voor stuursignalen. Alle stuursignalen kunnen op de aansluitpunten in deze behuizing worden aangesloten. Bij onderhoud of vervanging van de afsluiter-/aandrijvingseenheid, kan deze behuizing van de ELQ-aandrijving worden losgekoppeld en aan een andere aandrijving worden gekoppeld. U hoeft dan niet de hele besturingsbedrading opnieuw aan te sluiten.

5.1 Connecting “Open” and “Close” control signals / Anschließen der Steuersignale “Öffnen” und “Schließen” / *“Open” en “dicht” stuursignalen aansluiten*

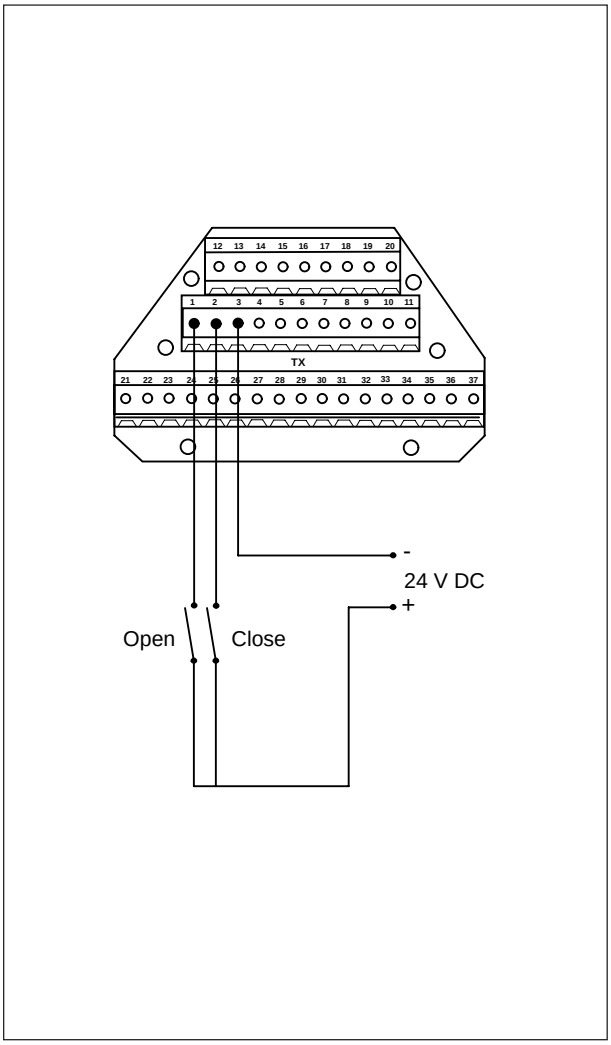

5.1.1

5.1.1

A 24 V DC signal at 1 and 3 opens the actuator.
A signal at 2 and 3 closes the actuator.
No signal (or a signal at both), the actuator stops.

Ein 24-V-Gleichstromsignal an 1 und 3 öffnet den Antrieb. Ein Signal an 2 und 3 schließt den Antrieb.
Wenn kein Signal (oder an beiden Punkten ein Signal) anliegt, stoppt der Antrieb.

Door een 24 V DC signaal op terminal 1 en 3 gaat de aandrijving open. Door een signaal op terminal 2 en 3 gaat de aandrijving dicht.
Geen signaal (of een signaal op beide), de aandrijving stopt.

5.2 Limit switches for position indicating / Endlagenschalter zur Endlagenanzeige / *Eindschakelaars voor positie-aanduiding*

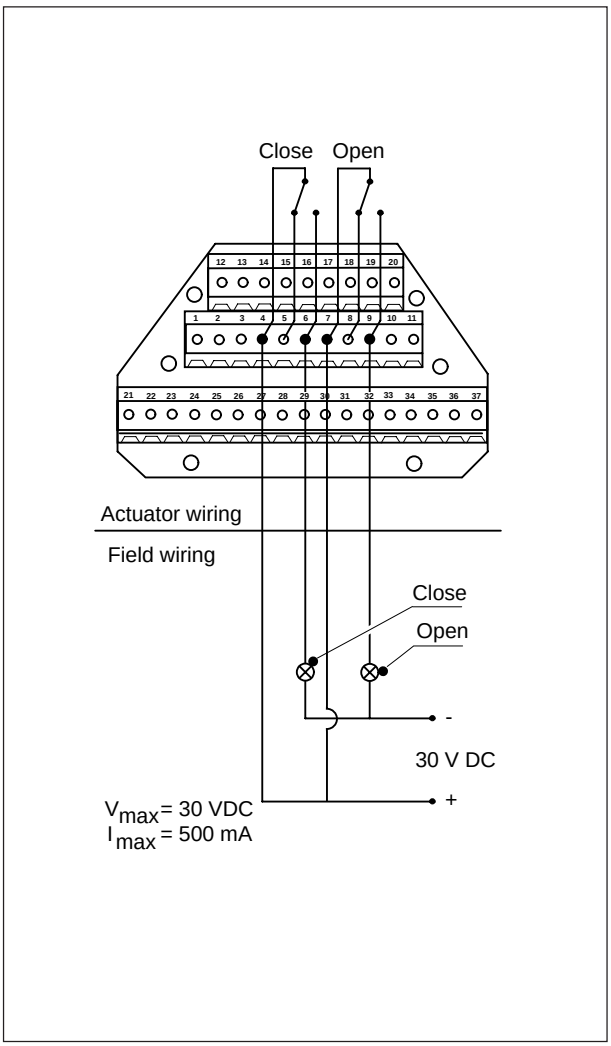

5.2.1

5.2.1

Connect 30 V max. to the switches for external use, (see specifications). For limit switch setting see § 4.1.

Before making the connections, first decide on the type of indication required:

Position indication 5.2.1

- closed
- open

Switches are shown in mid-stroke.

Für Zusatzgeräte können Sie bis zu 30 V an diese Schalter anschließen (siehe die technischen Daten).
Hinweise zum Einstellen der Endlagenschalter finden Sie in Abschnitt 4.1.

Bevor Sie die Endanlagenschalter anschließen , müssen Sie zunächst feststellen, welche Art von Anzeige benötigt wird:

Endlagenanzeige 5.2.1

- **geschlossen**
- **offen**

Die Abbildung zeigt die Schalter in der Mittelstellung des Drehwinkels.

Sluit 30 V max. aan op de schakelaars voor extern gebruik (zie specificaties). Voor het instellen van de eindschakelaars, zie § 4.1.

Alvorens de aansluitingen te maken, dient u eerst te beslissen welk type aanduiding u wenst:

Positie-aanduiding 5.2.1

- *dicht*
- *open*

Schakelaars zijn afgebeeld in het midden van de slag.

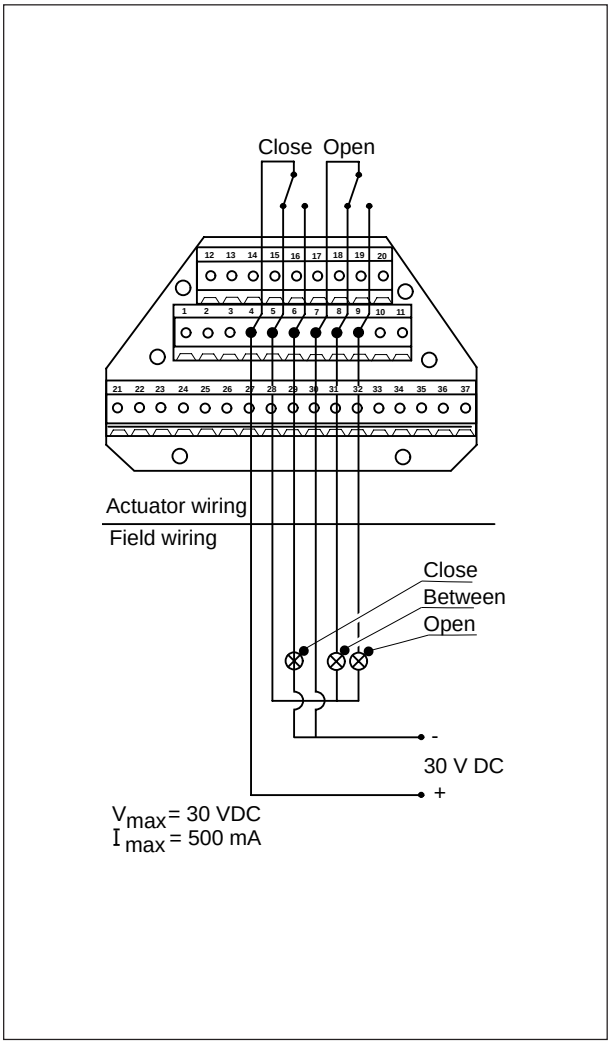

5.2.2

Position indication 5.2.2

- closed
- between open and closed
- open

Switches are shown in mid-stroke.

Endlagenanzeige 5.2.2

- geschlossen
- zwischen offen und geschlossen
- offen

Die Abbildung zeigt die Schalter in der Mittelstellung des Drehwinkels.

Positie-aanduiding 5.2.2

- *Dicht*
- *Tussen open en dicht*
- *Open*

Schakelaars zijn afgebeeld in het midden van de slag.

6 CONNECTING POWER SUPPLY / ANSCHLIESSEN DER NETZSPANNUNG / *VOEDINGSSPANNING AANSLUITEN*

Note
Before connecting the power supply connect all options properly (see option instructions).

The power print is designed so that four basic types of power can be supplied to the actuator.

Hinweis
Vor dem Anschließen der Netzspannung muß das Zubehör richtig angeschlossen sein (siehe Anleitungen für Zubehör).

Die Stromversorgungsplatine ist so ausgelegt, daß der Antrieb mit vier verschiedenen Arten von Strom versorgt werden kann.

Opmerking
Sluit alle optionele onderdelen correct aan, alvorens de voeding aan te sluiten (zie aanwijzingen optionele onderdelen).

De voedingsprintplaat is zo ontworpen dat vier basistypen voedingsspanning aan de aandrijving kunnen worden geleverd.

Power supply specification / Netzspannung / specificatie voedingsspanning						
Terminal	Voltage range / Spannung / Spanningsbereik	Max. current * / Höchstzul. strom * / max. stroom*				
		ELQ-100	ELQ-200	ELQ-300	ELQ-500	ELQ-800
0 - 1	115 VAC (+10% /-6%) 50/60 Hz	1 A	1 A	1 A	1.7 A	1.7 A
0 - 2	230 VAC (+10% /-6%) 50/60 Hz	0.5 A	0.5 A	0.5 A	0.9 A	0.9 A
0 - 3	400 VAC (+10% /-6%) 50/60 Hz	0.3 A	0.3 A	0.3 A	0.5 A	0.5 A
4 - 5	24 VDC (+10%)	4.1 A	4.3 A	4 A	5.3 A	5.1 A

* Max. current when all options mounted and under full load.

* Höchstzulässiger Strom bei Vollast und bei Verwendung der Optionsbaugruppen.

* Max. stroom als alle optionele onderdelen zijn bevestigd en bij volledige belasting.

Note
- Ground properly.
- When supplying three phase current connect a maximum of three wires, two phases and earth.

Hinweis
- Erdung einwandfrei ausführen.
- Schließen Sie beim Zuführen von Drehstrom maximal drei Drähte an: zwei Phasen und Erde.

Opmerking
- *Zorg voor correcte aarding.*
- *Sluit bij voeding van driefasenstroom maximaal drie draden aan, twee fasen en aarde.*

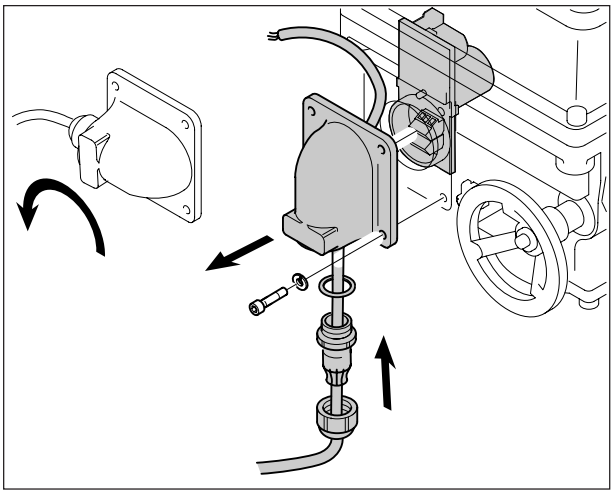

6.0.1

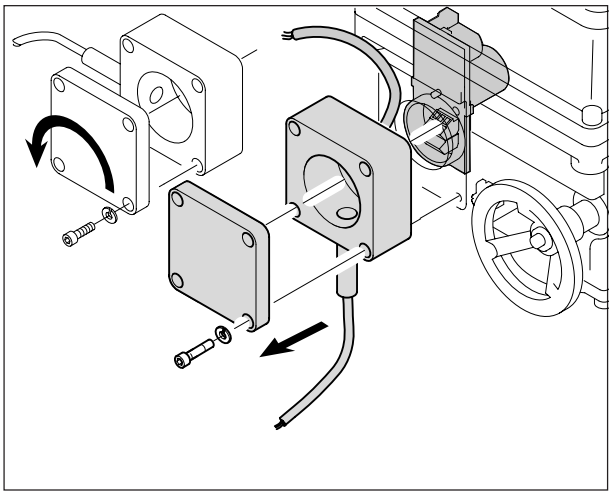

6.0.2

Connecting the power supply.

- Remove the front cover.
- Mount cable gland in the front cover.
- Insert power cable through cable gland and front cover.
- Connect power cable to power board (see fig. 6.0.3).
- Mount front cover in desired position (see fig. 6.0.1).
- Fasten cable gland.

For pipe connection see fig. 6.0.2.

Anschließen der Netzspannung:

- **Nehmen Sie den vorderen Anschlußdeckel ab.**
- **Setzen Sie eine Kabelverschraubung in den Anschlußdeckel.**
- **Führen Sie das Stromkabel durch die Kabeleinführung des Anschlußdeckels.**
- **Schließen Sie das Stromkabel an die Stromversorgungsplatine an (siehe Abb. 6.0.3).**
- **Montieren Sie den Anschlußdeckel wieder in die von Ihnen gewünschte Position. (siehe Abb. 6.0.1).**
- **Sichern Sie das Kabel mit der Kabelverschraubung.**

Hinweise für Rohranschluß finden Sie in Abb. 6.0.2.

Voedingsspanning aansluiten.

- *Verwijder het deksel.*
- *Bevestig de kabeldoorvoerplug in het deksel.*
- *Steek stroomkabel door kabeldoorvoerplug en deksel.*
- *Sluit stroomkabel op voedingskaart aan (zie afb. 6.0.3).*
- *Bevestig deksel in gewenste positie (zie afb. 6.0.1).*
- *Zet kabeldoorvoerplug vast.*

Voor buisaansluiting, zie afb. 6.0.2.

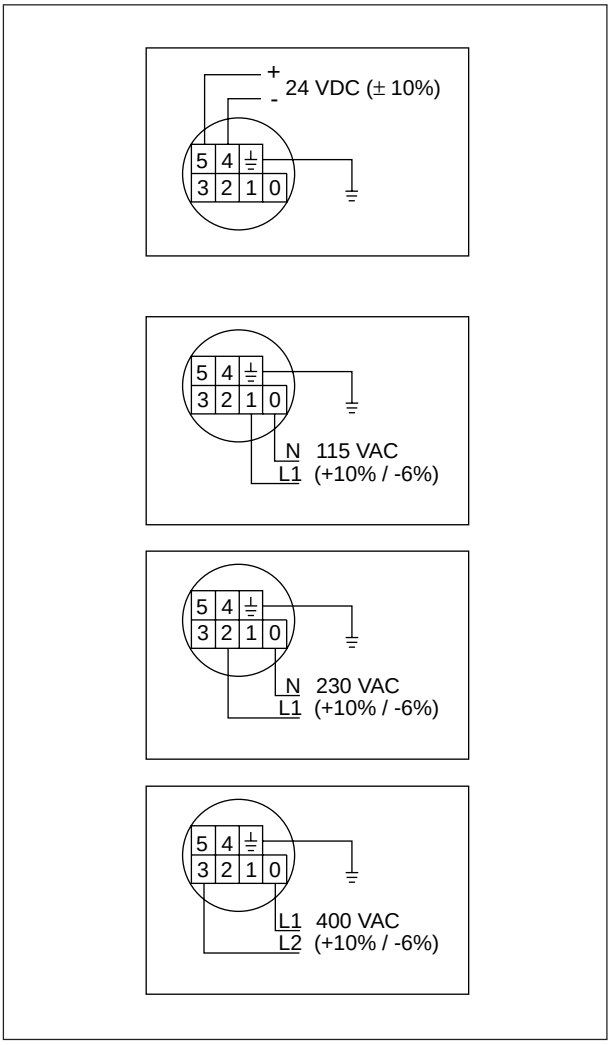

6.0.3

6.0.3

Connecting power cable to power board.

Warning
The actuator should be externally protected by a fuse.
AC: Fuse min. 2.5 Amp.
DC: Fuse min. 10 Amp.

Requirement for Factory Mutual (FM):
The 24 VDC power supply has to be protected by a power limited circuit (< 30 VDC and max. 150 W).

Anschließen des Stromkabels an die Stromversorgungsplatine.

Achtung
Der Antrieb ist mit einer Außensicherung zu versehen.
Wechselstrom: Sicherung von mindestens 2,5 A
Gleichstrom: Sicherung von mindestens 10 A

Erfordernis für Factory Mutual (FM):
Das 24 VDC-Spg.Versorgungsteil muß durch einen Energie begrenzten Stromkreis geschützt werden (< 30 VDC und Maximum 150 W).

Stroomkabel op voedingskaart aansluiten.

Waarschuwing
De aandrijving dient extern door een zekering te zijn beveiligd.
AC: Zekering min. 2.5 Amp.
DC: Zekering min. 10 Amp.

Vereiste voor Factury Mutual (FM):
De 24 VDC voedings spanning moet begrenst worden door een energie begrenzend stroomcircuit (< 30 VDC en max. 150 W).

6.1 Main fuse replacement / Auswechseln der Hauptsicherung / *Hoofdzekering vervangen*

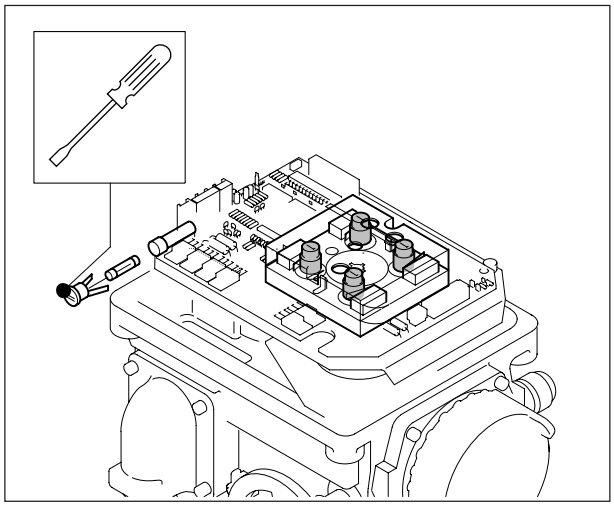

6.1.1

Internal main fuse ELQ-actuators		
Eingebaute Hauptsicherung der ELQ-Antriebe		
Interne hoofdzekering ELQ-aandrijvingen		
ELQ 100/200/300/500/800	T 10 A	ø 5 x 20 mm

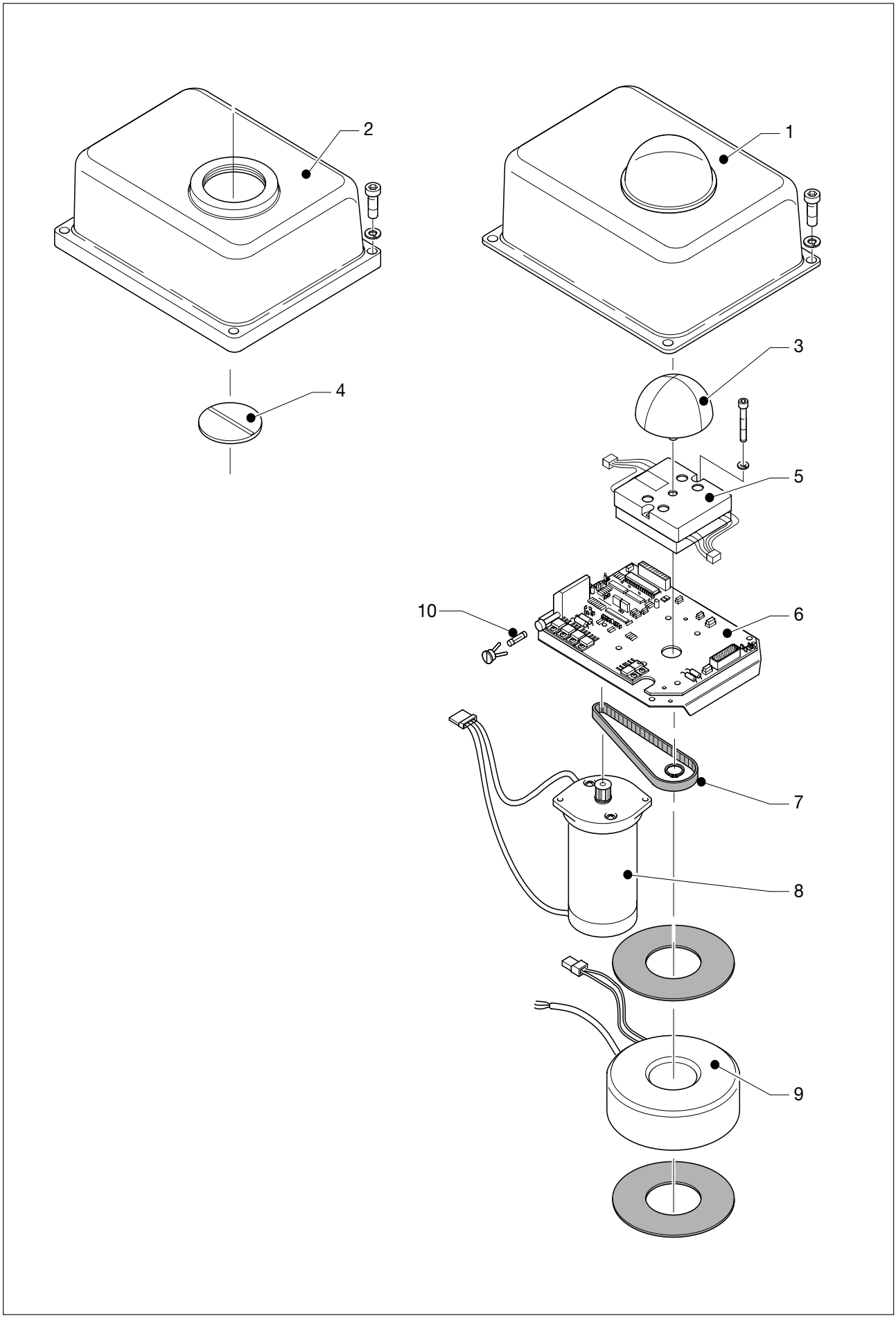
2
1
3
4
5
10
6
7
8
9

7 PARTS LIST / STÜCKLISTE / *STUKLIJSTEN*

Pos	Note Hinw. *Opm.*	Description	Umschreibung	*Beschrijving*
1	(1	Cover WP complete	Deckel WP komplett	*Deksel WP kompleet*
2	(1	Cover XP complete	Deckel XP komplett	*Deksel XP kompleet*
3		Dial WP	Sichtanzeige WP	*Standindicatie schijf WP*
4		Dial XP	Sichtanzeige XP	*Standindicatie schijf XP*
5		Limit switch assembly	Endlagenschaltermodul	*Eindschakelaarsmodule*
6	(1	Mainboard incl. bracket	Steuerplatine inkl. Konsole	*Hoofdprintplaat incl. beugel*
7	(1	Pullybelt	Antriebsriemen	*Aandrijfriem*
8	(1	Motor	Motor	*Motor*
9	(1	Transformer	Transformator	*Transformator*
10	(1 / (3	Main fuse	Hauptsicherung	*Hoofd zekering*

(1 When ordering add actuator type to description
e.i.; Motor for ELQ-100".
(2 When ordering, please indicate which electrical entry is needed
e.i.: PG13,5, M20 or 1/2" NPT.
(3 See § 6,1 for more details.

(1 Bei Ersatzteilbestellung, bitte Antriebstyp hinzufügen.
Bei Ersatzteilbestellung, bitte angeben welche Gewindegröße.
(2 Für die Kabeleinführung benötigt wird
z.B. PG 13,5, M 20 oder 1/2'' NPT.
(3 Siehe § 6,1 für weitere Angaben.

(1 Bij bestelling aandrijvingstype toevoegen aan de omschrijving
b.v.; Motor voor ELQ-100.
(2 Bij bestelling aangeven welke elektrische ingang nodig is
b.v.; PG13,5, M20 oder 1/2" NPT.
(3 Zie § 6,1 voor verdere details.

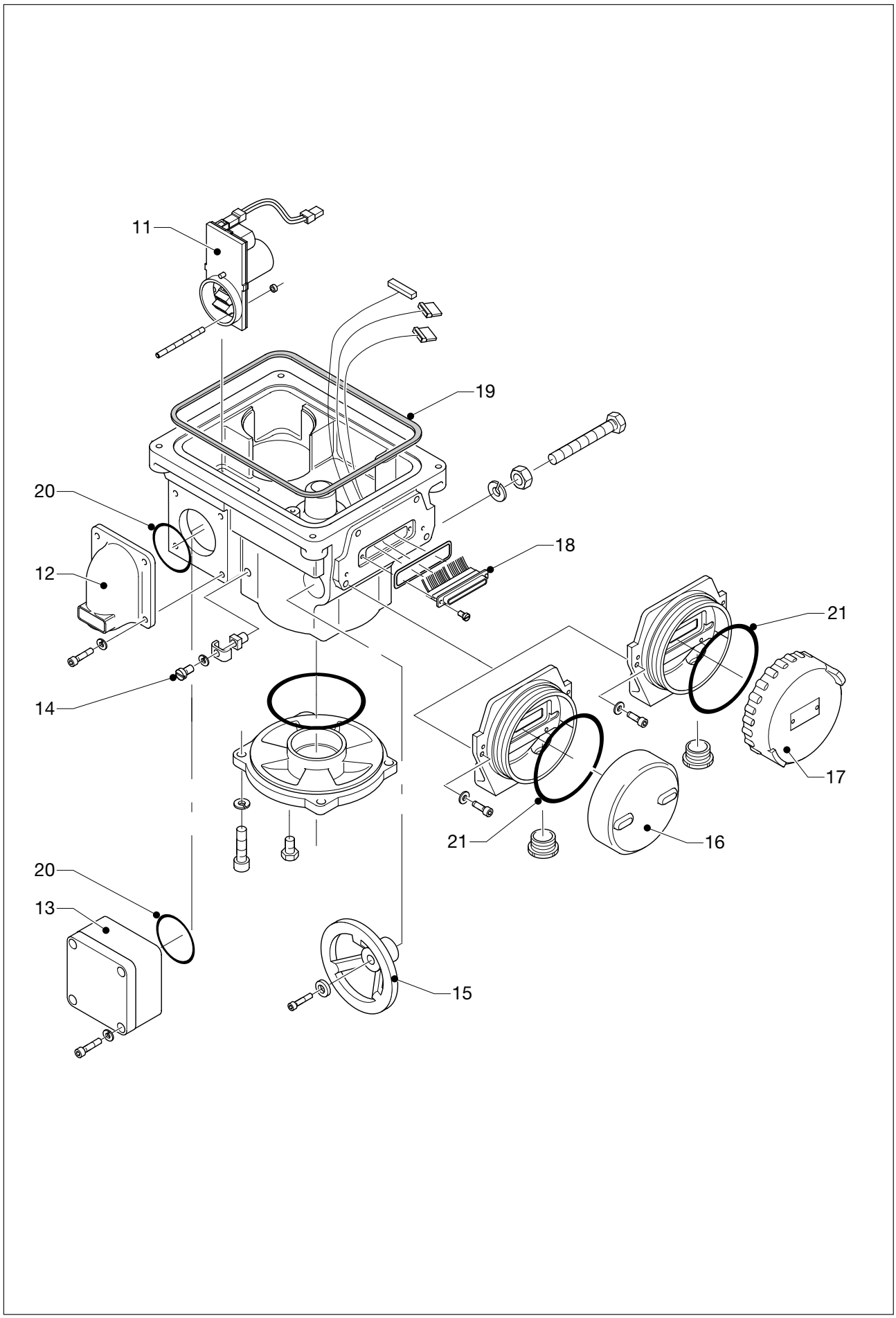
11
19
20
18
12
21
14
17
21
16
20
13
15

Pos	Note **Hinw.** ***Opm.***	Description	**Umschreibung**	***Beschrijving***
11	(1	Power supply assembly	**Stromversorgungsmodul**	*Voedingsmodule*
12	(2	Cap power supply	**Deckel Stromversorgung**	*Deksel voedingsmodule*
13	(2	Housing assembly power supply	**Gehäusemodul Stromversorgung**	*Behuizing voedingsmodule*
14		Ground lug	**Erdungssatz**	*Aardeset*
15	(1	Hand wheel	**Handrad**	*Handwiel*
16	(2	Terminal compartment WP	**Klemmenraum WP**	*Klemmenbehuizing WP*
17	(2	Terminal compartment XP	**Klemmenraum XP**	*Klemmenbehuizing XP*
18		Cable harness assembly	**Stecker inkl. Kabel**	*Draadboom*
19		Sealing topcover	**Deckeldichtung**	*Pakking deksel*
20		O-ring power supply cover	**O-Ring Deckel Stromversorgung**	*O-ring voedingsmodule deksel*
21		O-ring terminal compartment cover	**O-Ring Klemmenraum WP/XP**	*O-ring klemmenbehuizing*

(1 When ordering add actuator type to description
e.i.; Motor for ELQ-100.
(2 When ordering, please indicate which electrical entry is needed
e.i.: PG13,5, M20 or 1/2” NPT.

(1 Bei Ersatzteilbestellung, bitte Antriebstyp hinzufügen.
Bei Ersatzteilbestellung, bitte angeben welche Gewindegröße.
(2 Für die Kabeleinführung benötigt wird
z.B. PG 13,5, M 20 oder 1/2'' NPT.

(1 Bij bestelling aandrijvingstype toevoegen aan de omschrijving
b.v.; Motor voor ELQ-100.
(2 Bij bestelling aangeven welke elektrische ingang nodig is
b.v.; PG13,5, M20 oder 1/2” NPT.

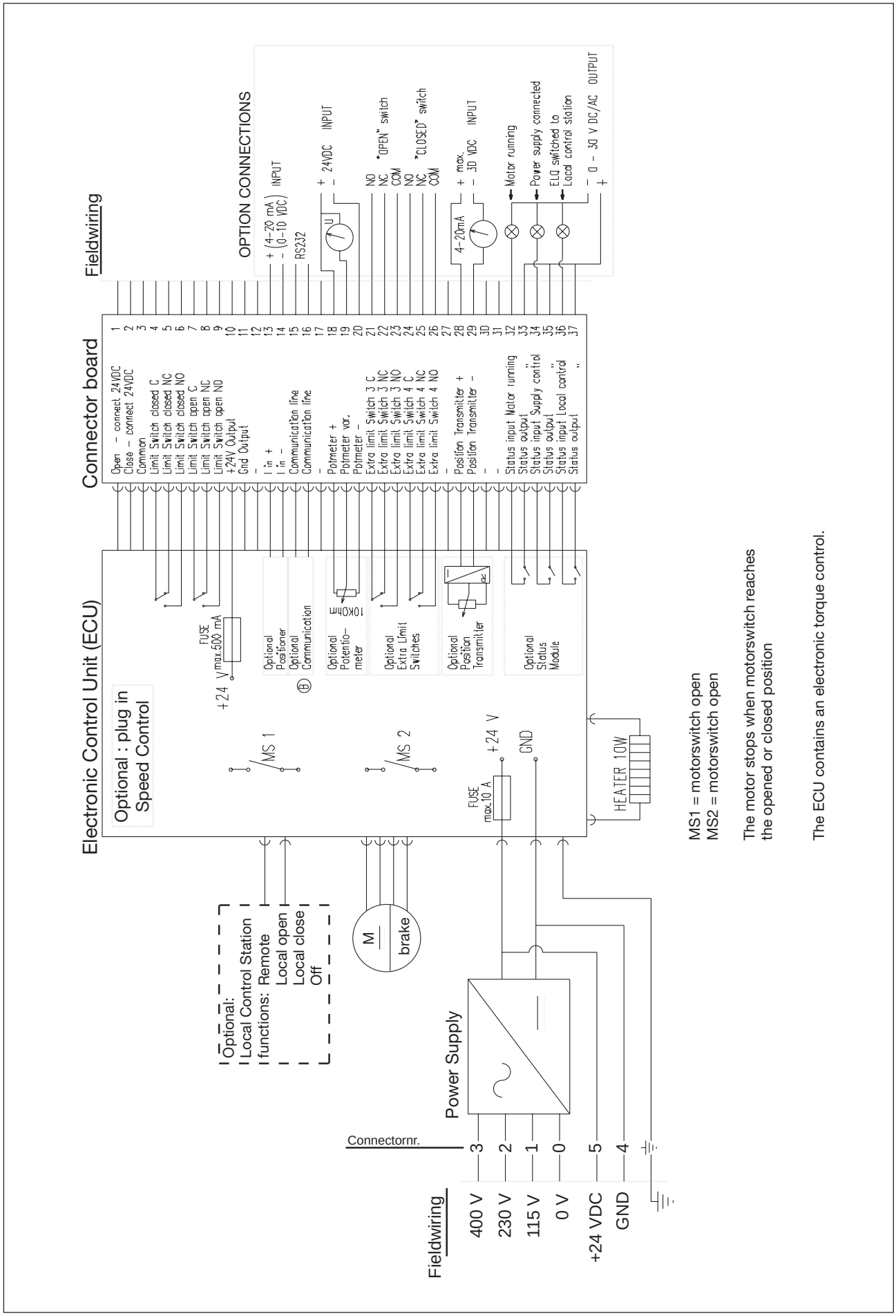
Fieldwiring
OPTION CONNECTIONS
+ (4-20 mA) - (0-10 VDC) INPUT
RS232
+ - 24VDC INPUT
NO NC COM "OPEN" switch
NO NC COM "CLOSED" switch
+ max. - 30 VDC INPUT
4-20mA
Motor running
Power supply connected
ELQ switched to Local control station
- 0 - 30 V DC/AC OUTPUT +
Connector board
Open - connect 24VDC 1
Close - connect 24VDC 2
Common 3
Limit Switch closed C 4
Limit Switch closed NC 5
Limit Switch closed NO 6
Limit Switch open C 7
Limit Switch open NC 8
Limit Switch open NO 9
+24V Output 10
Gnd Output 11
- 12
I in + 13
I in - 14
Communication line 15
Communication line 16
- 17
Potmeter + 18
Potmeter var. 19
Potmeter - 20
Extra limit Switch 3 C 21
Extra limit Switch 3 NC 22
Extra limit Switch 3 NO 23
Extra limit Switch 4 C 24
Extra limit Switch 4 NC 25
Extra limit Switch 4 NO 26
- 27
Position Transmitter + 28
Position Transmitter - 29
- 30
- 31
Status input Motor running 32
Status output 33
Status input "Supply control" 34
Status output 35
Status input "Local control" 36
Status output " 37
Electronic Control Unit (ECU)
Optional : plug in Speed Control
FUSE max.500 mA
+24 V
Optional Positioner
Optional Communication
Optional Potentio-meter
10KOhm
Optional Extra Limit Switches
Optional Position Transmitter
Optional Status Module
MS 1
MS 2
+24 V
GND
FUSE max.10 A
HEATER 10W
Optional:
Local Control Station functions: Remote
Local open
Local close
Off
M
brake
Power Supply
Connectornr.
3 2 1 0 5 4
Fieldwiring
400 V
230 V
115 V
0 V
+24 VDC
GND
MS1 = motorswitch open
MS2 = motorswitch open
The motor stops when motorswitch reaches the opened or closed position
The ECU contains an electronic torque control.

A WIRING DIAGRAM / VERDRAHTUNGSPLAN / *BEDRADINGS DIAGRAM*

Description	**Umschreibung**	***Beschrijving***
Brake	Bremse	*Rem*
C or COM = common	C oder COM = gemeinsam	*C oder COM = gemeenschappelijk*
Close	Geschlossen	*Dicht*
Connectornr.	Anschlussnummer	*Aanluitnummer*
Field wiring	Verdrahtung vom Kunden	*Bedrading voor klant*
GND	Masse	*Aarde*
Input	Input	*Input*
MS1 = motor switch open	MS1 = Motorschalter offen	*MS1 = Motorschakelaar open*
MS2 = motor switch open	MS1 = Motorschalter geschlossen	*MS1 = Motorschakelaar gesloten*
NC = Normaly Closed	NC = Normal geschlossen	*NC = Normaal gesloten*
NO = Normaly Open	NO = Normal geöffnet	*NO = Normal geopend*
Open	Offen	*Open*
Output	Output	*Output*
Power supply	Stromversorgung	Voedingsspanning
The ECU containes an electronic torque control.	Die electronische Steuereinheit enthält eine electronisch Drehmomentüberwachung	*De elektronische besturingseenheid (ECU) bevat een draaimoment kontrole*
The motor stops when motor switches reaches the opened or closed position.	Der Motor stopt wenn die Motorschalter die geöffnete oder geschlossene Stellung erreichen.	*De motor stopt als de motorschakelaars de geopende- of de gesloten stand bereiken.*
VAC	V WS	*V AC*
VDC	V GS	*V DC*
Optional	**Option**	***Optioneel***
Local Control Station Functions	Funktionen der Ortsbedienungsstation	*Functies van de lokale besturingseenheid*
Remote	Fernbedienung	*afstandsbediening*
Local open	Lokal öffnen	*Lokaal openen*
Local close	Lokal schließen	*Lokaal sluiten*
Off	Aus	*Uit*
Electronic Control Unit (ECU)	**Electronische Steuereinheit (ECU)**	***Elektronische besturingseenheid (ECU)***
Plug in Speed Control	Einsteckkarte für Geschwindigkeitsreglung	*Plug in voor snelheidsregeling*
Fuse	Sicherung	*Zekering*
Positioner	Stellungsregler	*Standsteller*
Communication	Kommunikation	*Communicatie*
Potentiometer	Potentiometer	*Potentiometer*
Extra limit switches	Extra Endlagenschalter	*Extra einschakelaars*
Position transmitter	Positionsgeber	*Positiezender*
Status module	Status Modul	*Status module*
Heater	Heizungselement	*Verwarmingselement*
Connectorboard	**Anschlußplatine**	***Aansluitprintplaat***
Connect 24VDC	Verbinde 24V GS	*Sluit 24 VDC aan*
Common	Gemeinsam	*Gemeenschappelijk*
Limit switch	Endlagenschalter	*Eindschakelaar*
Gnd Output	Erde Output	*Aarde Output*
Communication line	Kommunikationsleitung	*Communicatieleiding*
Potmeter	Potentiometer	*Potentiometer*
Status input motor running	Status input Motor läuft	*Status input Motor loopt*
Status output motor running	Status output Motor läuft	*Status output Motor loopt*
Status input supply control	Status input Stromversorgung	*Status input Voedingsspanning*
Status output supply control	Status output Stromversorgung	*Status output Voedingsspanning*
Status input Local Control	Status input Ortsbedienung	*Status input lokaal regelstation*
Status output Local Control	Status output Ortbedienung	*Status output lokaal regelstation*
Option connections	**Anschluße für Optionen**	***Aansluitpunten voor opties***
Switch	Schalter	*Schakelaar*
Motor running	Motor läuft	*Motor loopt*
Power supply connected	Stromversorgung angeschlossen	*Voedingsspanning aangesloten*
ELQ switched to Local control station	ELQ geschaltet an Ortsbedienung	*ELQ aangesloten op lokal regelstation*

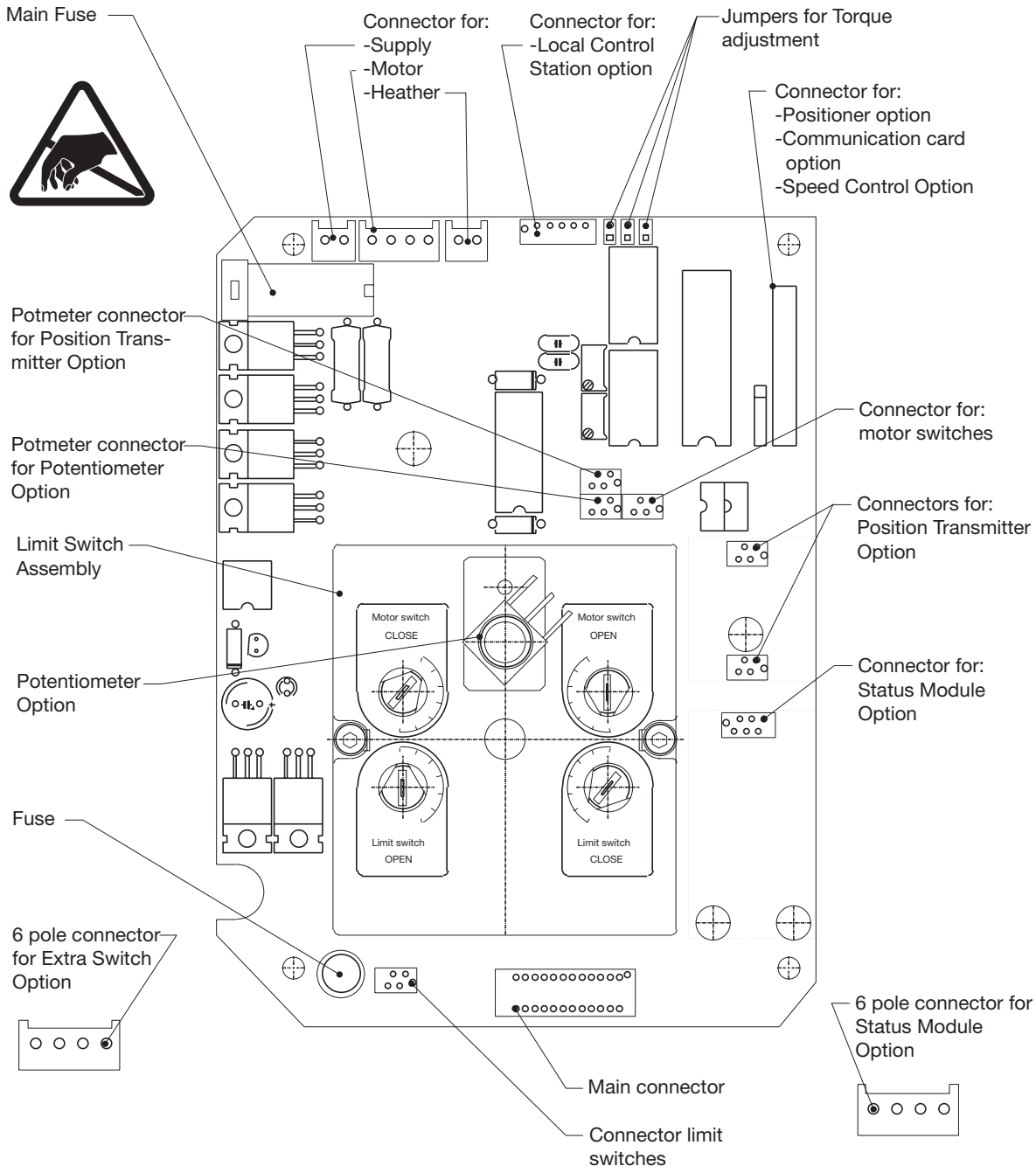
Main Fuse
Connector for:
-Supply
-Motor
-Heather
Connector for:
-Local Control
Station option
Jumpers for Torque
adjustment
Connector for:
-Positioner option
-Communication card
option
-Speed Control Option
Potmeter connector
for Position Trans-
mitter Option
Potmeter connector
for Potentiometer
Option
Connector for:
motor switches
Connectors for:
Position Transmitter
Option
Limit Switch
Assembly
Motor switch
CLOSE
Motor switch
OPEN
Potentiometer
Option
Connector for:
Status Module
Option
Fuse
Limit switch
OPEN
Limit switch
CLOSE
6 pole connector
for Extra Switch
Option
6 pole connector for
Status Module
Option
Main connector
Connector limit
switches

B LAYOUT OF ELECTRONIC CONTROL UNIT / ÜBERSICHT ÜBER DIE ELEKTRONISCHE BEDIENEINHEIT / *OVERZICHT BESTURINGSEENHEID*

Warning
The electronic parts of the ELQ-actuator or the options can be damaged by a discharge of static electricity. Before you start touch a grounded metal surface to become static free.

Achtung
Die elektronischen Teilen des ELQ-Antriebs oder des Zubehörs können durch Entladung von statischer Elektrizität beschädigt werden. Berühren Sie daher vor Beginn der Arbeiten eine geerdete Metalflaäche, so daß Sie frei von statischer Elektrizität sind.

Waarschuwing
Die elektronische onderdelen van de ELQ-aandrijving of de optionele onderdelen kunnen worden beschadigd door een ontlading van statische elektriciteit.
Raak, voordat u begint, een geaard metalen vlak aan om statisch vrij te zijn.

Description	**Umschreibung**	***Beschrijving***
Main Fuse	Hauptsicherung	Hoofdzekering
Connector for:	Anschluß für:	Aansluitpunt voor:
Supply	Stromversorgung	Voedingsspanning
Motor	Motor	Motor
Heater	Heizung	Verwarming
Local Control Station option	Ortsbedienungsstation option	Lokaal regelstation optie
Jumpers for Torque adjustment	Jumper für Drehmomenteinstellung	Jumpers voor draaimoment instelling
Positioner (option)	Stellungsregler (Option)	Standsteller
Communication card (option)	Kommunikationsplatine (Option)	Communicatieprintplaat (optie)
Speed control (option)	Geschwindigkeitsregelung (Option)	Snelheidsregeling
Potmeter connector for Position Transmitter option	Potmeteranschluß für Positionsgeber Option	Potmeter connector voor Positietransmitter optie
Potmeter connector for Potentiometer option	Potmeteranschluß für Potentiometer Option	Potmeter connector voor Potentiometer optie
Limit switch assembly	Endlagenschaltermodul	Eindschakelaarunit
Potentiometer option	Potentiometer Option	Potentiometer optie
Fuse	Sicherung	Zekering
6 pole connector for Extra Switches option	6 Poliger Stecker für Extra Endlagenschalter Option	6 polige stekker voor Extra eindschakelaars optie
Main connector	Hauptanschluß	Hoofdaansluiting
Connector limit switches	Anschluß Endlagenschalter	Aansluitpunt voor eindschakelaars
motor switches	MotorSchalter	Motorschakelaars
Position Transmitter option	Positionsgeberoption	Positietransmitter optie
Status Module option	Status Modul Option	Status module optie
6 pole connector for Status Module option	6 Poliger Stecker für Status Modul Option	6 polige stekker voor Status module optie

TECHNO
A PCC Valves & Controls Product

METAL CHECK VALVE INSTALLATION INSTRUCTIONS

GENERAL

The internal assembly of the Technocheck should move freely from the open to closed position without binding. Even in the largest valves, the internals should operate easily by hand. The Technocheck may appear not to close tightly when so operated, but this simply means that the sealing member has not assumed its "set" and in no way should be interpreted as a failure of the valve to close easily or to seat tightly. This condition, if it exists, will be rectified by a few flexings in service. All Technocheck valve assemblies are treated with a locking solution during assembly and no loose fasteners should be found.

PRECAUTIONS

- **Positive displacement and Rotary Lobe Blowers** – When used in this application, a Technocheck should **always** be mounted on the downstream side of a silencer.
- **Reciprocating Pumps and Compressors –** Technocheck Valves **should not** be used in these applications.
- **Pipe Fittings, Expansions, Reductions and Swages** – A **minimum** of 5 to 7* pipe diameters should be maintained between the Valve and Pipe Fittings (Tees, Elbows, etc.), Expansions, Reductions, and Swages.
- **Male Threaded, Plain or Grooved End Valves** – These valves may be held stationary in vises or with special wrenches, but should **never** be turned with a pipe wrench of any kind since serious risk of body distortion would be incurred. The use of a strap wrench is acceptable.
- **Adjacent to Vertical Elbows –** When installing Technocheck Valves in vertical lines downstream from an elbow, it is necessary to orient the hinge post to prevent unequal loading of the two valve plates.

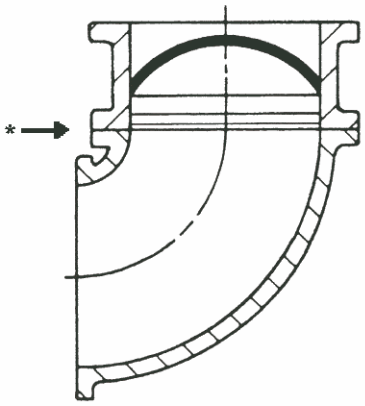

CORRECT

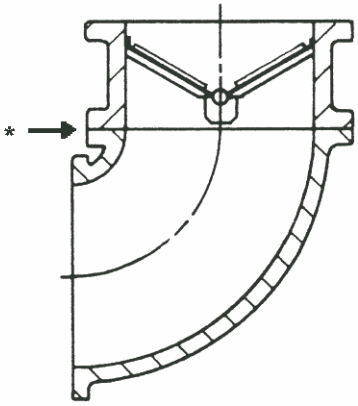

INCORRECT

NOTE: Frequently the discharge of pumps and compressors simulates the above elbow configuration, which causes higher velocity at the outer circumference. Care should be taken to position valves as shown above for these applications.

VALVE STORAGE

Valves should be stored indoors and in their original containers to keep them clean and to avoid damage.

REFER TO OPPOSITE SIDE FOR ADDITIONAL INSTRUCTIONS ON METAL CHECK VALVES.

VALVE POSITIONING

A. **Horizontal Lines –** Valves installed in Horizontal Lines must be bolted, threaded or coupled in place with the stationary support "Hinge Post" in the Vertical Position, i.e., in such a manner that the bolts protruding through the valve body are at the top and bottom of the installed valve, perpendicular to the flow. Wafer Style 5050 and 5051 do not have body bolts, however the valve body is clearly marked with a FLOW DIRECTION arrow and "TOP" to assist with proper positioning.

B. **Vertical Lines –** In the downward or upward position, no special attention need be given to the Hinge Post position. The only exception being when mounted directly downstream of an elbow. In this case, the flow velocity will be higher at the outer circumference of the elbow. Therefore, the Hinge Post should be mounted perpendicular to the outermost portion of the elbow. See opposite side (PRECAUTIONS) for illustration of this positioning.

SPRINGS - VALVE PLATES

Springs are standard on all Wafer Style 5050, 5051, and Deepwell Style 5002-F Valves. Springs are normally recommended for all Vertical downward flow applications of all Technocheck Valves. This is the general guideline and some downward flow applications may not require heavy-duty springs. Also certain downward flow conditions, depending on valve size and materials of construction, may require heavy-duty springs. If in doubt about spring selections, CONSULT THE FACTORY WITH THE DETAILS OF YOUR APPLICATION.

FLANGE GASKETS

Standard 1/16" thick rubber gaskets or as otherwise preferred are to be used when installing a Flanged or Wafer Style Valve. Gaskets may be oiled, greased, or left dry as preferred. Gaskets are not supplied with Valves.

MAINTENANCE

Maintenance of a Technocheck Valve is seldom required. Repair or replacement of internal assembly is straight forward, requiring no special skills or tools. Following are a few precautions.

1. When installing internal assembly, particular care must be taken not to distort the sealing member.
2. Insert new internal assembly from the "downstream" side. Slide assembly into valve body until bolt holes in the body line up with tapped holes in the hinge post of the internal assembly. In horizontal lines, the hinge post must be secured in the vertical plane.
3. Treat hinge post bolts with "Loctite A" sealant prior to assembly.
4. Nyltite washers must be used on hinge post bolts with final assembly.
5. After assembly, allow four hours for Loctite to set before placing the valve in service.
6. If you have any questions regarding our instructions, consult the factory.

NOTE: Above maintenance instructions apply to all metal valves except styles 5050 and 5051.

PRESSURE-TEMPERATURE RATING OF TECHNOCHECK VALVES

The pressure rating and temperature limitation of each valve is indicated on the nameplate. Caution should be taken not to exceed these limitations. If in doubt, consult the factory for verification. At right is a general guide of the temperature limitations of the valve sealing material.

SEALING MEMBER MATERIALS

MATERIAL	*TEMPERATURE RANGE
• Buna – N	-60 to 225°F
• Neoprene	-40 to 225°F
• Butyl	-65 to 250°F
• Hypalon	-20 to 250°F
• EPDM	-40 to 300°F
• Viton	-20 to 400°F
• Teflon	-20 to 450°F
• Silicone	-100 to 500°F
• FDA Approved White Neoprene	-40 to 225°F

*This temperature range is for general guidance. The figures may vary with application.

COOPER CAMERON VALVES

TECHNO

OPERATION AND MAINTENANCE MANUAL

ELASTOMER HINGE DESIGN CHECK VALVES

For technical questions, please contact the following:

Engineering Department
Phone: (610)353-4905
Fax: (610)353-0954

INSTRUCTIONS FOR REPLACING COMPLETE INTERNAL ASSEMBLY

After removing valve from pipeline:

1. *Remove top and bottom hinge post retaining screws. (see Fig.1)*
2. *Through inlet side of valve, grasp hinge post and slide complete internal assembly out of bore of valve.*
3. *Clean bore of all foreign debris. If bore is corroded, clean hinge post seating area by lightly sanding or sand blasting. If highly corroded or pitted, sealing will be difficult and replacement of complete valve is reccomended.*
4. *Remove travel stop retaining screws and travel stop (if so equipped).*

Caution: ***Apply a small amount of thread-locking liquid (such as loctite thread-locker #242-blue) to all threaded holes and screws while proceeding with the following steps.***

5. *Align hinge post mounting holes with holes in body and slide new complete internal assembly into valve bore from outlet side, being sure to position valve plates in the opening position from inlet to outlet.*

Note: ***If hinge post holes are inserted past the body holes, do not pull back to align. Continue to push internal completely through body and reinsert.***

6. *Insert hinge post mounting screws with new sealing washers (Nyltite, Teflon, etc.). Tighten accordingly, keeping slight pressure on internal in closed position, being sure not to overtighten screws.*
7. *Reposition travel stop and reinsert retaining screws (if so equipped). Tighten accordingly, being sure not to overtighten screws.*

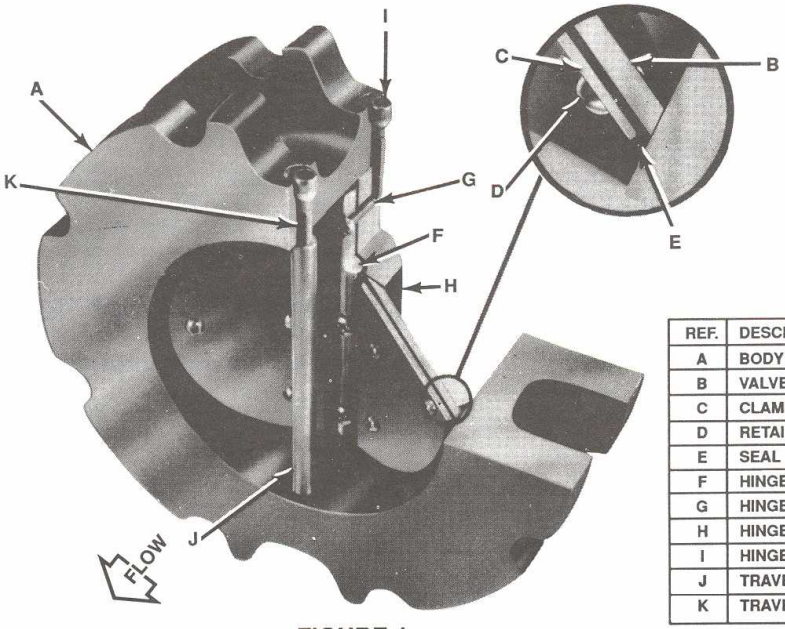

REF.	DESCRIPTION
A	BODY
B	VALVE PLATES
C	CLAMP PLATES
D	RETAINING SCREW
E	SEAL
F	HINGE CLAMP
G	HINGE CLAMP RETAINING SCREWS
H	HINGE POST
I	HINGE POST RETAINING SCREWS
J	TRAVEL STOP
K	TRAVEL STOP RETAINING SCREWS

If So Equipped

FIGURE 1

TYPICAL CUTAWAY VIEW OF ELASTOMER HINGE DESIGN CHECK VALVE

INSTRUCTIONS FOR REPLACING SPRING(S)

After removing valve from pipeline:

1. *Remove complete internal assembly (see "instructions for replacing complete internal assembly" No's 1 and 2).*
2. *Remove hinge clamp retaining screws and remove clamp(s), springs(s) and shaft(s). (see Fig. 2)*

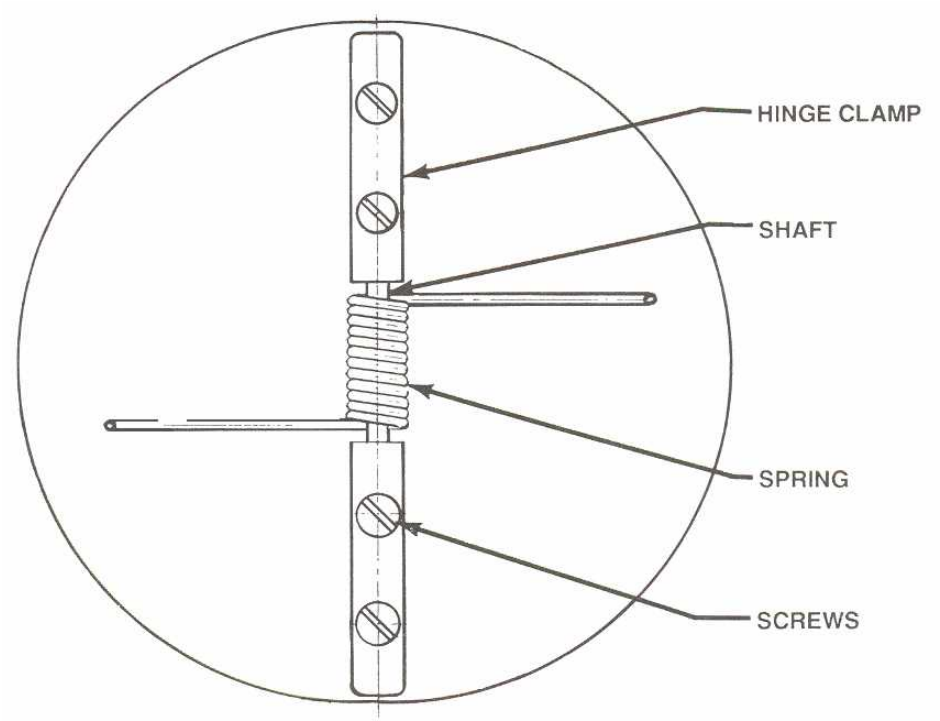

FIG. 2

3. *Reinsert shaft(s) in spring(s).*

Caution: ***Apply a small amount of thread-locking liquid (such as loctite thread-locker #242-blue) to all threaded holes and screws while proceeding with the following steps.***

4. *Install top or bottom hinge clamp leaving retaining screw loose in hinge post.*
5. *Reposition spring(s) and shaft(s) on valve plates and hinge post, install opposite (other) hinge clamp(s) on hinge post and evenly tighten all retaining screws.*

Note: ***At this point, repeatedly open and release valve plates to ensure no interference exists. If plates do not open freely, loosen clamp plate and hinge clamp screws, reposition all parts evenly until plates operate freely.***

6. *Place completed internal assembly in bore of valve (see "instructions for replacing*

INSTRUCTIONS FOR REPLACING SEALING MEMBER

After removing valve from pipeline:

1. *Remove complete internal assembly (see "instructions for replacing complete internal assembly" No's 1 and 2).*
2. *Remove hinge clamp retaining screws (note arrangement of spring and shaft if so equipped).*
3. *Remove clamp plate/sealing member retaining screws. Separate valve plate, sealing member, and clamp plate.*

Note: ***It may be necessary to pry items apart with a flat blade screwdriver due to adhesion between these parts.***

4. *Clean valve plate and clamp plate of any residual seal material.*
5. *Clean tapped holes in valve plate of any foreign material.*

Caution: ***Apply a small amount of thread-locking liquid (such as loctite thread-locker #242-blue) to all threaded holes and screws while proceeding with the following steps.***

6. *Position new sealing member over valve plate and place clamp plate over sealing member, reinsert retaining screws leaving assembly loose so that plates may be adjusted.*

Note: ***Widest edge of valve plate should be positioned against sealing member side. If not, disassemble and position correctly***.

7. *Position sealing member assembly on hinge post, align pre-punched holes in seal with holes in post. Reposition hinge clamp(s) (and spring and shaft parts if so equipped) over sealing member.*
8. *Reinsert hinge clamp retaining screws and tighten completely and evenly.*
9. *While holding valve plates seated against hinge post, align clamp plate and tighten retaining screws completely and evenly.*

Note: ***At this point, repeatedly open and release valve plates to ensure no interference exists. If plates do not operate freely, loosen clamp plate and hinge clamp screws, reposition all parts evenly until plates operate freely.***

10. *Place completed internal assembly in bore (see "instructions for replacing complete internal assembly" No's 3 through 8).*

SHARPE® VALVES

STAINLESS STEEL

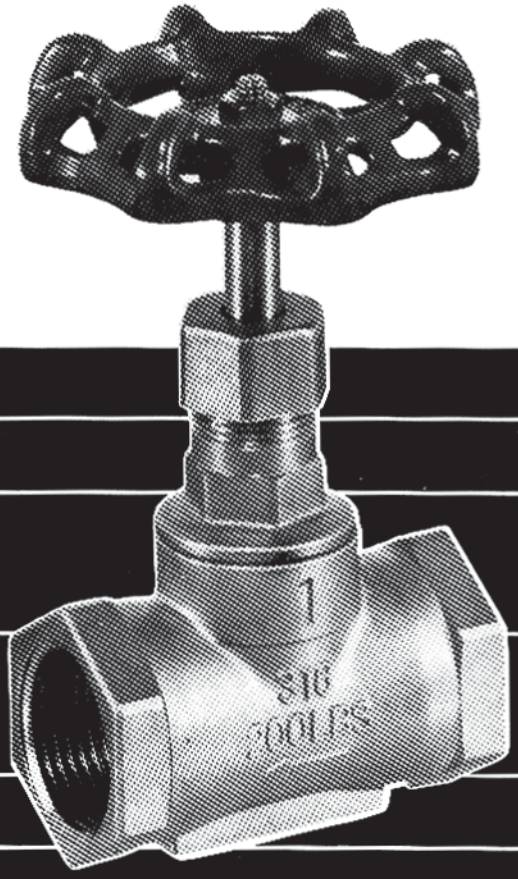

THREADED GLOBE VALVE

Threaded Globe Valve

ASTM-A351 **Fig. No. 40276**

200 PSI WOG AT 350°F

INSIDE SCREW AND SCREWED BONNET

RISING STEM

PART NAME	MATERIAL
1 Hand Wheel Nut	304
2 Name Plate	Aluminum
3 Hand Wheel	Mild Steel
4 Packing Nut	CF8M
5 Packing Gland	304
6 Packing	Teflon
7 Stem	316
8 Bonnet	CF8M
9 Body	CF8M
10 Disc	316

Hydrostatic Shell Test	300 PSI
Hydrostatic Seat Test	220 PSI

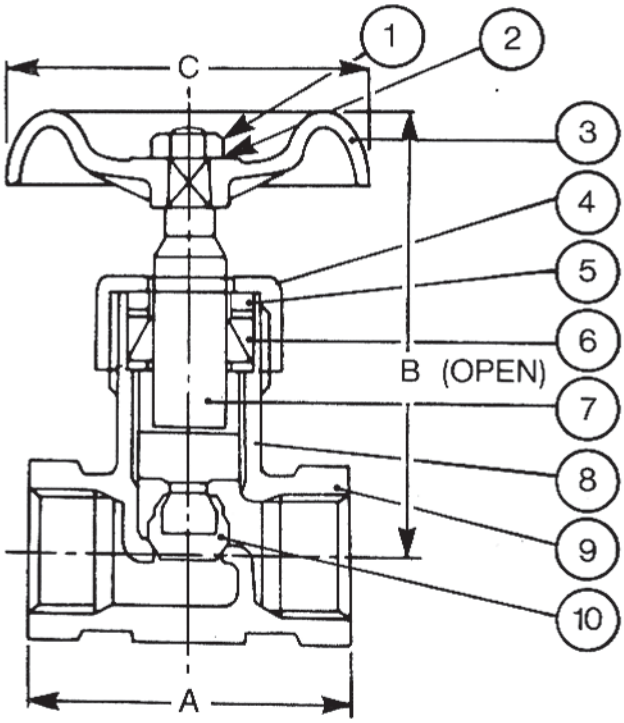

DIMENSIONS IN INCHES						
Size	1/2	3/4	1	1-1/4	1-1/2	2
A	2.56	3.15	3.54	4.13	4.72	5.51
B (Open)	3.54	3.74	4.53	5.12	5.70	6.10
C	2.36	2.76	3.15	3.15	3.54	3.94
Weight (lbs)	0.86	1.34	1.92	2.73	3.96	5.62

SHARPE® VALVES

A DIVISION OF Sharon MFG. & EQPT. INC.

Toll-Free 1-877-7SHARPE
E-Mail:sharpediv@aol.com
www.sharpevalves.com

504 West Wrightwood Ave.
Elmhurst , IL 60126

Due to continuous development of our product range we reserve the right to change the dimensions and information contained in the leaflet as required.
Teflon® is a registered trademark of E. I. DuPont.

ACS550

User's Manual
ACS550-01 Drives (0.75...160 kW)
ACS550-U1 Drives (1...200 hp)

List of related manuals

GENERAL MANUALS

ACS550-01/U1 User's Manual (0.75…160 kW) / (1…200 hp)
3AFE64804588 (3AUA0000001418) (English)

- Safety
- Installation
- Start-up, control with I/O and ID Run
- Control panels
- Application macros
- Parameters
- Embedded fieldbus
- Fieldbus adapter
- Diagnostics
- Maintenance
- Technical data

Flange Mounting Instructions

Kit, IP21 / UL type 1	Frame size	Code (English)
FMK-A-R1	R1	100000982
FMK-A-R2	R2	100000984
FMK-A-R3	R3	100000986
FMK-A-R4	R4	100000988
AC8-FLNGMT-R5 [1]	R5	ACS800-PNTG01U-EN
AC8-FLNGMT-R6 [1]	R6	

1. Not available for ACS550-01 series

Kit, IP54 / UL type 12	Frame size	Code (English)
FMK-B-R1	R1	100000990
FMK-B-R2	R2	100000992
FMK-B-R3	R3	100000994
FMK-B-R4	R4	100000996

OPTION MANUALS

(delivered with optional equipment)

MFDT-01 FlashDrop User's Manual
3AFE68591074 (English)

OHDI-01 115/230 V Digital Input Module User's Manual
3AUA0000003101 (English)

OREL-01 Relay Output Extension Module User's Manual
3AUA0000001935 (English)

OTAC-01 User's Manual Pulse Encoder Interface Module User's Manual
3AUA0000001938 (English)

RCAN-01 CANopen Adapter User's Manual
3AFE64504231 (English)

RCCL-01 CC-Link Adapter Module User's Manual
3AUA0000061340 (English)

RCNA-01 ControlNet Adapter User's Manual
3AFE64506005 (English)

RDNA-01 DeviceNet Adapter User's Manual
3AFE64504223 (English)

RECA-01 EtherCAT Adapter Module User's Manual
3AUA0000043520 (English)

REPL-01 Ethernet POWERLINK Adapter Module User's Manual
3AUA0000052289 (English)

RETA-01 Ethernet Adapter Module User's Manual
3AFE64539736 (English)

RETA-02 Ethernet Adapter Module User's Manual
3AFE68895383 (English)

RLON-01 LonWorks® Adapter Module User's Manual
3AFE64798693 (English)

RPBA-01 PROFIBUS DP Adapter User's Manual
3AFE64504215 (English)

SREA-01 Ethernet Adapter User's Manual
3AUA0000042896 (English)

Typical contents

- Safety
- Installation
- Programming/Start-up
- Diagnostics
- Technical data

MAINTENANCE MANUALS

Guide for Capacitor Reforming in ACS50, ACS55, ACS150, ACS310, ACS320, ACS350, ACS550 and ACH550
3AFE68735190 (English)

CANopen is a registered trademark of CAN in Automation e.V.

CC-Link is a trademark of CC-Link Partner Association.

ControlNet™ is a trademark of ODVA™.

DeviceNet™ is a trademark of ODVA™.

DRIVECOM is a registered trademark of DRIVECOM User Group e.V.

EtherCAT is a registered trademark of Beckhoff.

EtherNet/IP™ is a trademark of ODVA™.

LonWorks® is a registered trademark of Echelon Corporation.

Modbus and Modbus/TCP are registered trademarks of Schneider Automation Inc.

PROFIBUS, PROFIBUS DP and PROFINET IO are registered trademarks of Profibus International.

ACS550-01/U1 Drives
0.75…160 kW
1…200 hp

User's Manual

3AFE64804588 (3AUA0000001418) Rev G
EN
EFFECTIVE: 2009-07-07
SUPERSEDES: 3AFE64804588 (3AUA0000001418) Rev F 2007-04-16

© 2009 ABB Oy. All Rights Reserved.

Safety

Use of warnings and notes

There are two types of safety instructions throughout this manual:

- Notes draw attention to a particular condition or fact, or give information on a subject.
- Warnings caution you about conditions which can result in serious injury or death and/or damage to the equipment. They also tell you how to avoid the danger. The warning symbols are used as follows:

Electricity warning warns of hazards from electricity which can cause physical injury and/or damage to the equipment.

General warning warns about conditions, other than those caused by electricity, which can result in physical injury and/or damage to the equipment.

WARNING! The ACS550 adjustable speed AC drive should ONLY be installed by a qualified electrician.

WARNING! Even when the motor is stopped, dangerous voltage is present at the power circuit terminals U1, V1, W1 and U2, V2, W2 and, depending on the frame size, UDC+ and UDC-, or BRK+ and BRK-.

WARNING! Dangerous voltage is present when input power is connected. After disconnecting the supply, wait at least 5 minutes (to let the intermediate circuit capacitors discharge) before removing the cover.

WARNING! Even when power is switched off from the input terminals of the ACS550, there may be dangerous voltage (from external sources) on the terminals of the relay outputs RO1...RO3.

WARNING! When the control terminals of two or more drives are connected in parallel, the auxiliary voltage for these control connections must be taken from a single source which can either be one of the drives or an external supply.

WARNING! Disconnect the internal EMC filter when installing the drive on an IT system (an ungrounded power system or a high-resistance-grounded [over 30 ohm] power system), otherwise the system will be connected to ground potential through the EMC filter capacitors. This may cause danger, or damage the drive.

Disconnect the internal EMC filter when installing the drive on a corner grounded TN system, otherwise the drive will be damaged.

Note: When the internal EMC filter is disconnected, the drive is not EMC compatible.

See section *Disconnecting the internal EMC filter* on page *23*. Also see sections *IT systems* on page *280* and *Corner grounded TN systems* on page *279*.

WARNING! Do not attempt to install or remove EM1, EM3, F1 or F2 screws while power is applied to the drive's input terminals.

WARNING! Do not control the motor with the disconnecting device (disconnecting means); instead, use the control panel start and stop keys and , or commands via the I/O board of the drive. The maximum allowed number of charging cycles of the DC capacitors (i.e. power-ups by applying power) is five in ten minutes.

WARNING! The ACS550-01/U1 is not field repairable. Never attempt to repair a malfunctioning drive; contact the factory or your local Authorized Service Center for replacement.

WARNING! The ACS550 will start up automatically after an input voltage interruption if the external run command is on.

WARNING! The heat sink may reach a high temperature. See chapter *Technical data* on page *271*.

Note: For more technical information, contact the factory or your local ABB representative.

Table of contents

List of related manuals

Safety

Use of warnings and notes 5

Table of contents

Installation

Installation flow chart 11
Preparing for installation 12
Installing the drive 16

Start-up, control with I/O and ID Run

How to start up the drive 33
How to control the drive through the I/O interface 40
How to perform the ID Run 41

Control panels

About control panels 43
Compatibility 43
Assistant Control Panel 44
Basic Control Panel 64

Application macros

ABB Standard macro 74
3-wire macro 75
Alternate macro 76
Motor Potentiometer macro 77
Hand-Auto macro 78
PID Control macro 79
PFC macro 80
Torque Control macro 81
Connection examples of two-wire and three-wire sensors 82
User parameter sets 83
Macro default values for parameters 84

Parameters

Complete parameter list 87
Complete parameter descriptions 102

Embedded fieldbus

Overview 199
Planning 200
Mechanical and electrical installation – EFB 200

Communication set-up – EFB 201
Activate drive control functions – EFB 203
Feedback from the drive – EFB 207
Diagnostics – EFB 208
Modbus protocol technical data 211
ABB control profiles technical data 219

Fieldbus adapter

Overview 231
Planning 233
Mechanical and electrical installation – FBA 234
Communication set-up – FBA 235
Activate drive control functions – FBA 235
Feedback from the drive – FBA 238
Diagnostics – FBA 239
ABB Drives profile technical data 242
Generic profile technical data 250

Diagnostics

Diagnostic displays 253
Correcting faults 254
Correcting alarms 260

Maintenance

Maintenance intervals 265
Heatsink 265
Main fan replacement 266
Internal enclosure fan replacement 268
Capacitors 269
Control panel 269

Technical data

Ratings 271
Input power connections 275
Motor connections 283
Brake components 289
Control connections 293
Efficiency 294
Cooling 295
Dimensions and weights 297
Degrees of protection 300
Ambient conditions 300
Materials 301
Applicable standards 303
CE marking 303
C-Tick marking 303
UL/CSA markings 304
IEC/EN 61800-3 (2004) Definitions 305
Compliance with the IEC/EN 61800-3 (2004) 305

Product protection in the USA 306

Index

Further information

Product and service inquiries 319
Product training 319
Providing feedback on ABB Drives manuals 319
Document library on the Internet 319

Installation

Study these installation instructions carefully before proceeding. **Failure to observe the warnings and instructions may cause a malfunction or personal hazard.**

WARNING! Before you begin read chapter *Safety* on page *5*.

Note: The installation must always be designed and made according to applicable local laws and regulations. ABB does not assume any liability whatsoever for any installation which breaches the local laws and/or other regulations. Furthermore, if the recommendations given by ABB are not followed, the drive may experience problems that the warranty does not cover.

Installation flow chart

The installation of the ACS550 adjustable speed AC drive follows the outline below. The steps must be carried out in the order shown. At the right of each step are references to the detailed information needed for the correct installation of the drive.

Task	See
PREPARE for installation	*Preparing for installation* on page *12*
PREPARE the mounting location	*Prepare the mounting location* on page *16*
REMOVE the front cover	*Remove the front cover* on page *17*
MOUNT the drive	*Mount the drive* on page *18*
INSTALL wiring	*Wiring overview* on page *19* and *Install the wiring* on page *26*
CHECK installation	*Check installation* on page *31*
REINSTALL the cover	*Reinstall the cover* on page *32*
START-UP	*How to start up the drive* on page *33*

Preparing for installation

Lifting the drive

Lift the drive only by the metal chassis.

Unpacking the drive

1. Unpack the drive.
2. Check for any damage and notify the shipper immediately if damaged components are found.
3. Check the contents against the order and the shipping label to verify that all parts have been received.

Drive identification

Drive labels

To determine the type of drive you are installing, refer to either:

- serial number label attached on upper part of the chokeplate between the mounting holes, or

- type designation label attached on the heat sink – on the right side of the drive cover. Two examples of the type designation label are given below.

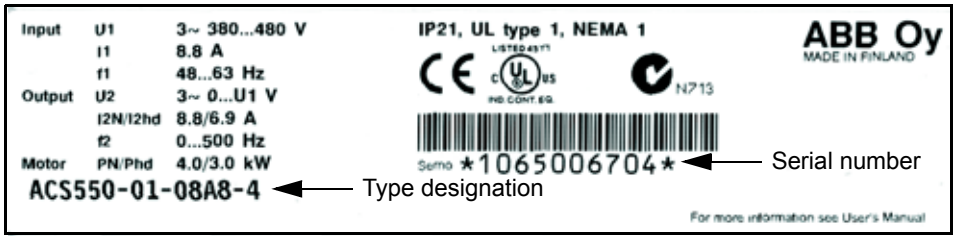

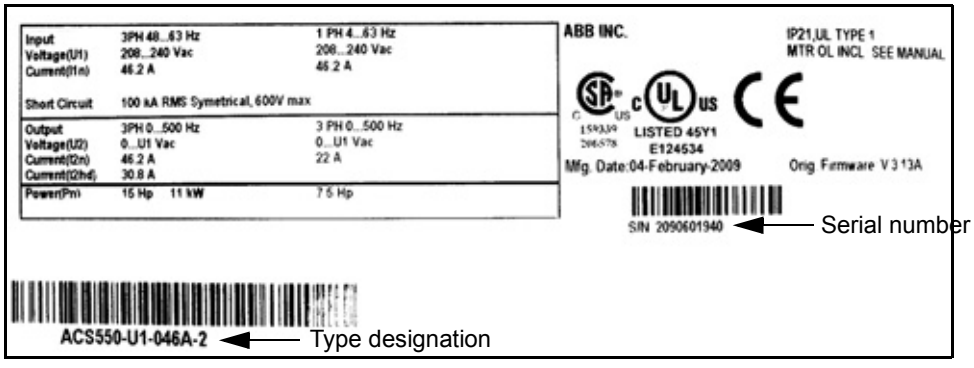

Type designation

Use the following chart to interpret the type designation found on both the type designation and the serial number label.

ACS550-01-08A8-4+J404+…

AC, Standard Drive – 550 product series

Construction (region specific)
01 = Setup and parts specific to IEC installation and compliance
U1 = Setup and parts specific to US installation and NEMA compliance

Output current rating
e.g. 08A8 = 8.8 A, see section *Ratings* on page *271* for details

Voltage rating
2 = 208…240 V AC
4 = 380…480 V AC
6 = 500…600 V AC

Options
Examples of options:
B055 = IP54 / UL type 12 (no specification = IP21 / UL type 1).
UL type 12 is not available for type ACS550-01-290A-4.
0J400 = No control panel
J404 = ACS-CP-C Basic Control Panel
L511 = OREL-01 Relay output extension
K451 = RDNA-01 DeviceNet
K452 = RLON-01 LonWorks
K454 = RPBA-01 PROFIBUS DP

Ratings and frame size

The chart in section *Ratings* on page *271* lists technical specifications and identifies the drive's frame size – significant, since some instructions in this document vary, depending on the drive's frame size. To read the ratings table, you need the "Output current rating" entry from the type designation. Also, when using the ratings table, note that the table is broken into sections based on the drive's "Voltage rating".

Serial number

The format of the drive serial number shown on the labels is described below.

Serial number is of format CYYWWXXXXX, where

C:	Country of manufacture
YY:	Year of manufacture
WW:	Week of manufacture; 01, 02, 03, … for week 1, week 2, week 3, …
XXXXX:	Integer starting every week from 00001.

Motor compatibility

The motor, drive and supply power must be compatible:

Motor specification	Verify	Reference
Motor type	3-phase induction motor	–
Nominal current	Motor value is within this range: 0.2…2.0 · I_{2hd} (I_{2hd} = drive heavy duty current)	• Type designation label on drive, entry for Output I_{2hd}, or • Type designation on drive and rating table in chapter *Technical data* on page *271*.
Nominal frequency	10…500 Hz	–
Voltage range	Motor is compatible with the ACS550 voltage range.	208…240 V (for ACS550-X1-XXXX-2) or 380…480 V (for ACS550-X1-XXXX-4) or 500…600 V (for ACS550-U1-XXXX-6)
Insulation	500…600 V drives: Either the motor complies with NEMA MG1 Part 31, or a du/dt filter is used between the motor and drive.	For ACS550-U1-XXXX-6

Tools required

To install the ACS550 you need the following:

- screwdrivers (as appropriate for the mounting hardware used)
- wire stripper
- tape measure
- drill
- for installations involving ACS550-U1, frame sizes R5 or R6 and IP54 / UL type 12 enclosures: punch for creating conduit mounting holes
- for installations involving ACS550-U1, frame size R6: appropriate crimping tool for power cable lugs. See section *Power terminal considerations – R6 frame size* on page *281*.
- mounting hardware: screws or nuts and bolts, four each. The type of hardware depends on the mounting surface and the frame size:

Frame size	Mounting hardware	
R1…R4	M5	#10
R5	M6	1/4 in
R6	M8	5/16 in

Suitable environment and enclosure

Confirm that the site meets the environmental requirements. To prevent damage prior to installation, store and transport the drive according to the environmental requirements specified for storage and transportation. See section *Ambient conditions* on page *300*.

Confirm that the enclosure is appropriate, based on the site contamination level:

- IP21 / UL type 1 enclosure: The site must be free of airborne dust, corrosive gases or liquids, and conductive contaminants such as dripping water, condensation, carbon dust and metallic particles.
- IP54 / UL type 12 enclosure: This enclosure provides protection from airborne dust and light sprays or splashing water from all directions.
- If, for some reason, an IP21 drive needs to be installed without the conduit box or cover, or an IP54 drive without the conduit plate or hood, see the note in chapter *Technical data*, page *304*.

Suitable mounting location

Confirm that the mounting location meets the following constraints:

- The drive must be mounted vertically on a smooth, solid surface, and in a suitable environment as defined above. For horizontal installation, contact your local ABB representative for more information.
- The minimum space requirements for the drive are the outside dimensions (see section *Outside dimensions* on page *298*), plus air flow space around the drive (see section *Cooling* on page *295*).
- The distance between the motor and the drive is limited by the maximum motor cable length. See section *Motor connection specifications* on page *283*.
- The mounting site must support the drive's modest weight. See section *Weight* on page *299*.

Installing the drive

WARNING! Before installing the ACS550, ensure the input power supply to the drive is off.

For flange mounting (mounting the drive in a cooling air duct), see the appropriate *Flange Mounting Instructions*:

Frame size	IP21 / UL type 1		IP54 / UL type 12	
	Kit	Code (English)	Kit	Code (English)
R1	FMK-A-R1	100000982	FMK-B-R1	100000990
R2	FMK-A-R2	100000984	FMK-B-R2	100000992
R3	FMK-A-R3	100000986	FMK-B-R3	100000994
R4	FMK-A-R4	100000988	FMK-B-R4	100000996
R5	AC8-FLNGMT-R5 [1]	ACS800-PNTG01U-EN	-	-
R6	AC8-FLNGMT-R6 [1]		-	-

1. Not available in ACS550-01 series.

Prepare the mounting location

The ACS550 should only be mounted where all of the requirements defined in section *Preparing for installation* on page *12* are met.

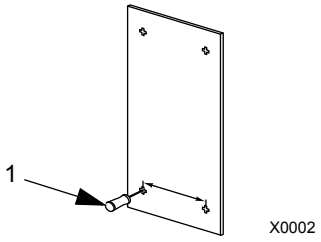

1. Mark the position of the mounting holes with the help of the mounting template provided with the drive.
2. Drill the holes.

Note: Frame sizes R3 and R4 have four holes along the top. Use only two. If possible, use the two outside holes (to allow room to remove the fan for maintenance).

Note: ACS400 drives can be replaced using the original mounting holes. For R1 and R2 frame sizes, the mounting holes are identical. For R3 and R4 frame sizes, the inside mounting holes on the top of ACS550 drives match ACS400 mounts.

Remove the front cover

IP21 / UL type 1

1. Remove the control panel, if attached.
2. Loosen the captive screw at the top.
3. Pull near the top to remove the cover.

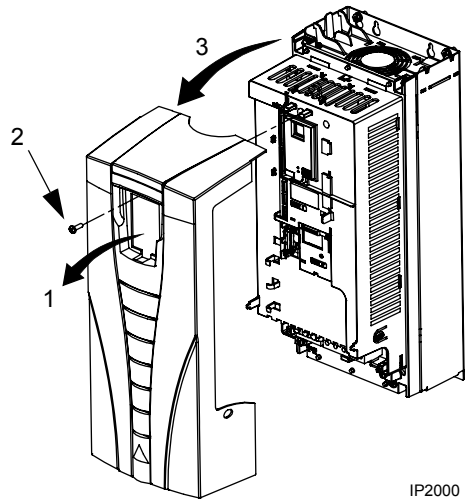

IP54 / UL type 12

1. If hood is present: Remove screws (2) holding hood in place.
2. If hood is present: Slide hood up and off of the cover.
3. Loosen the captive screws around the edge of the cover.
4. Remove the cover.

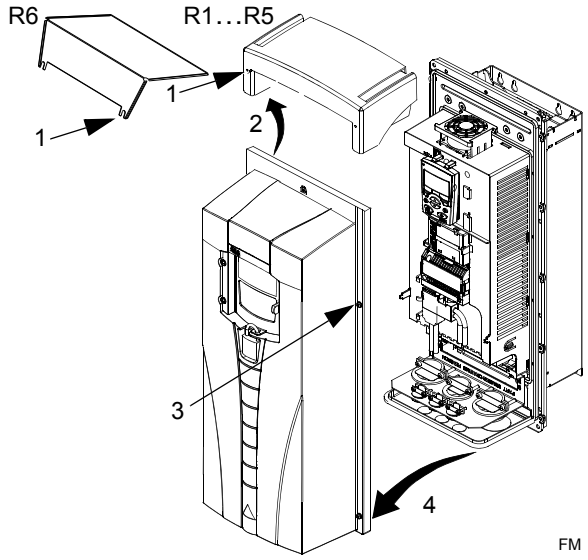

Mount the drive

IP21 / UL type 1

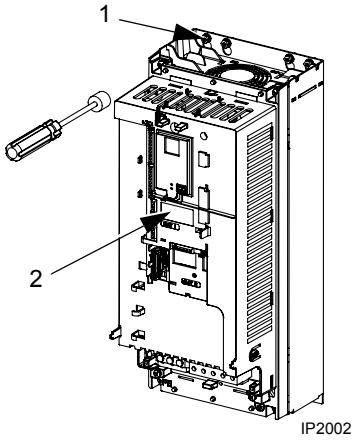

1. Position the ACS550 onto the mounting screws or bolts and securely tighten in all four corners.

   Note: Lift the ACS550 by its metal chassis (frame size R6 by the lifting holes on both sides at the top).

2. Non-English speaking locations: Add a warning sticker in the appropriate language over the existing warning on the top of the module.

IP54 / UL type 12

For the IP54 / UL type 12 enclosures, rubber plugs are required in the holes provided for access to the drive mounting slots.

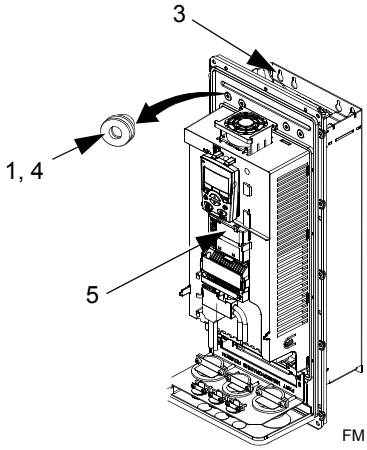

1. As required for access, remove the rubber plugs. Push plugs out from the back of the drive.
2. R5 & R6: Align the sheet metal hood (not shown) in front of the drive's top mounting holes. (Attach as part of next step.)
3. Position the ACS550 onto the mounting screws or bolts and securely tighten in all four corners.

   Note: Lift the ACS550 by its metal chassis (frame size R6 by the lifting holes on both sides at the top).

4. Reinstall the rubber plugs.
5. Non-English speaking locations: Add a warning sticker in the appropriate language over the existing warning on the top of the module.

Wiring overview

Conduit/Gland kit

Wiring drives with the IP21 / UL type 1 enclosure requires a conduit/gland kit with the following items:

- conduit/gland box
- five (5) cable clamps (ACS550-01 only)
- screws
- cover.

The kit is included with IP21 / UL type 1 enclosures.

Wiring requirements

WARNING! Ensure the motor is compatible for use with the ACS550. The drive must be installed by a competent person in accordance with the considerations defined in section *Preparing for installation* on page *12*. If in doubt, contact your local ABB sales or service office.

As you install the wiring, observe the following:

- There are four sets of wiring instructions – one set for each combination of drive enclosure type (IP21 / UL type and IP54 / UL type 12) and wiring type (conduit or cable). Be sure to select the appropriate procedure.
- Determine electro-magnetic compliance (EMC) requirements per local codes. See section *Motor cable requirements for CE & C-Tick compliance* on page *287*. In general:
  - Follow local codes for cable size.
  - Keep these four classes of wiring separated: input power wiring, motor wiring, control/communications wiring and braking unit wiring.
- When installing input power and motor wiring, refer to the following, as appropriate:

Terminal	Description	Specifications and notes
U1, V1, W1[1]	3-phase power supply input	*Input power connections* on page *275*
PE	Protective Ground	*Ground connections* on page *279*
U2, V2, W2	Power output to motor	*Motor connections* on page *283*

[1] The ACS550 -x1-xxxx-2 (208…240 V series) can be used with a single phase supply, if output current is derated by 50%. For single phase supply voltage, connect power at U1 and W1.

- To locate input power and motor connection terminals, see section *Power connection diagrams* on page *21*. For specifications on power terminals, see section *Drive's power connection terminals* on page *280*.
- For corner grounded TN systems, see section *Corner grounded TN systems* on page *279*.
- For IT systems, see section *IT systems* on page *280*.

- For frame size R6, see section *Power terminal considerations – R6 frame size* on page *281* to install the appropriate cable lugs.
- For drives using braking (optional), refer to the following, as appropriate:

Frame size	Terminal	Description	Braking accessory
R1, R2	BRK+, BRK-	Braking resistor	Braking resistor. See section *Brake components* on page *289*.
R3, R4, R5, R6	UDC+, UDC-	DC bus	Contact your ABB representative to order either: • braking unit or • chopper and resistor

- When installing control wiring, refer to the following chapters or sections, as appropriate:
  - *Control terminals table* on page *24*
  - *Control connections* on page *293*
  - *Application macros* on page *73*
  - *Complete parameter descriptions* on page *102*
  - *Embedded fieldbus* on page *199*
  - *Fieldbus adapter* on page *231*.

Power connection diagrams

The following diagram shows the terminal layout for frame size R3, which, in general, applies to frame sizes R1...R6, except for the R5/R6 power and ground terminals.

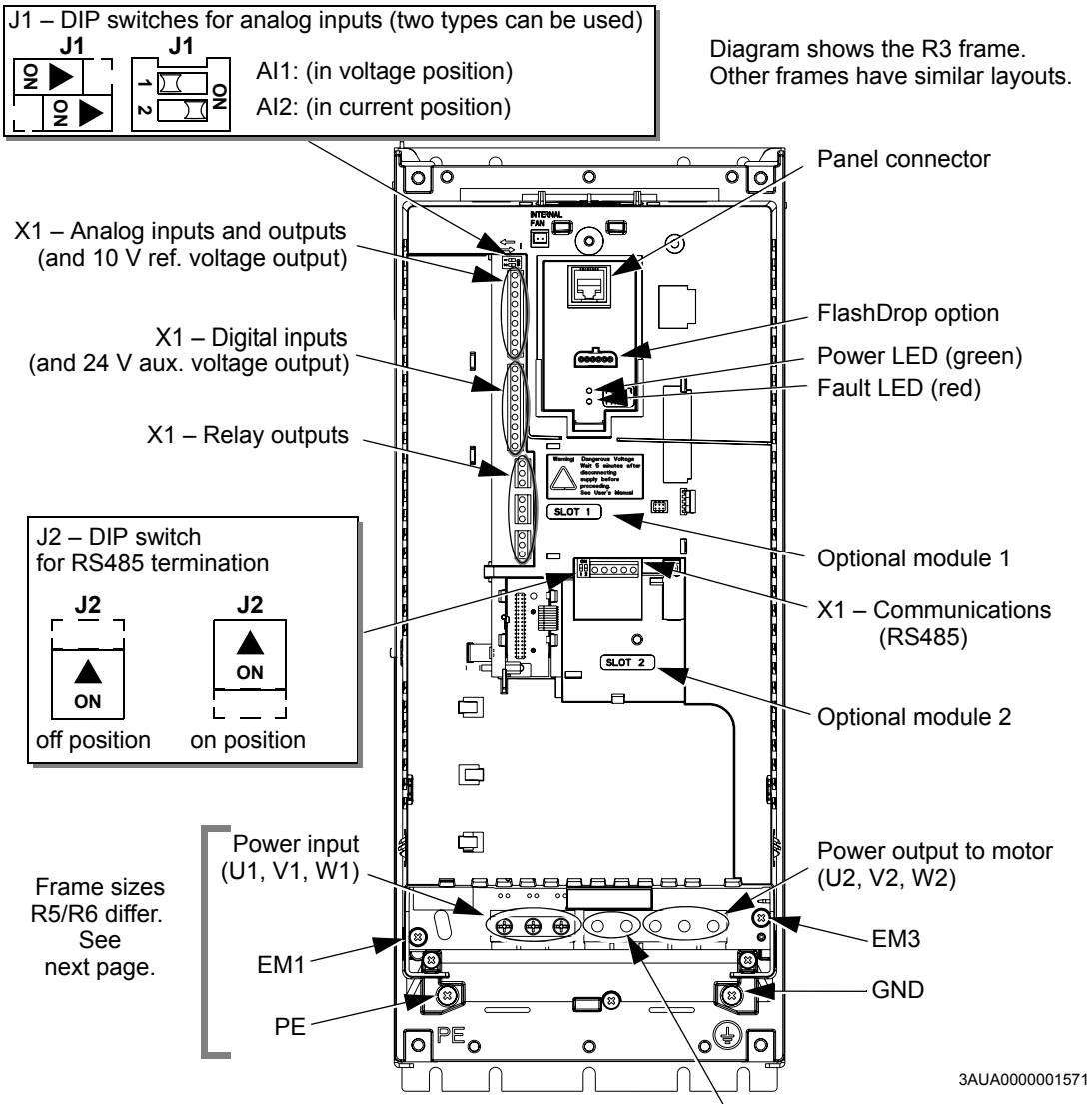

Optional braking

Frame size	Terminal labels	Brake options
R1, R2	BRK+, BRK-	Brake resistor
R3, R4	UDC+, UDC-	• Braking unit • Chopper and resistor

WARNING! To avoid danger, or damage to the drive, on IT systems and corner grounded TN systems, see section *Disconnecting the internal EMC filter* on page *23*.

The following diagram shows the power and ground terminal layout for frame sizes R5 and R6.

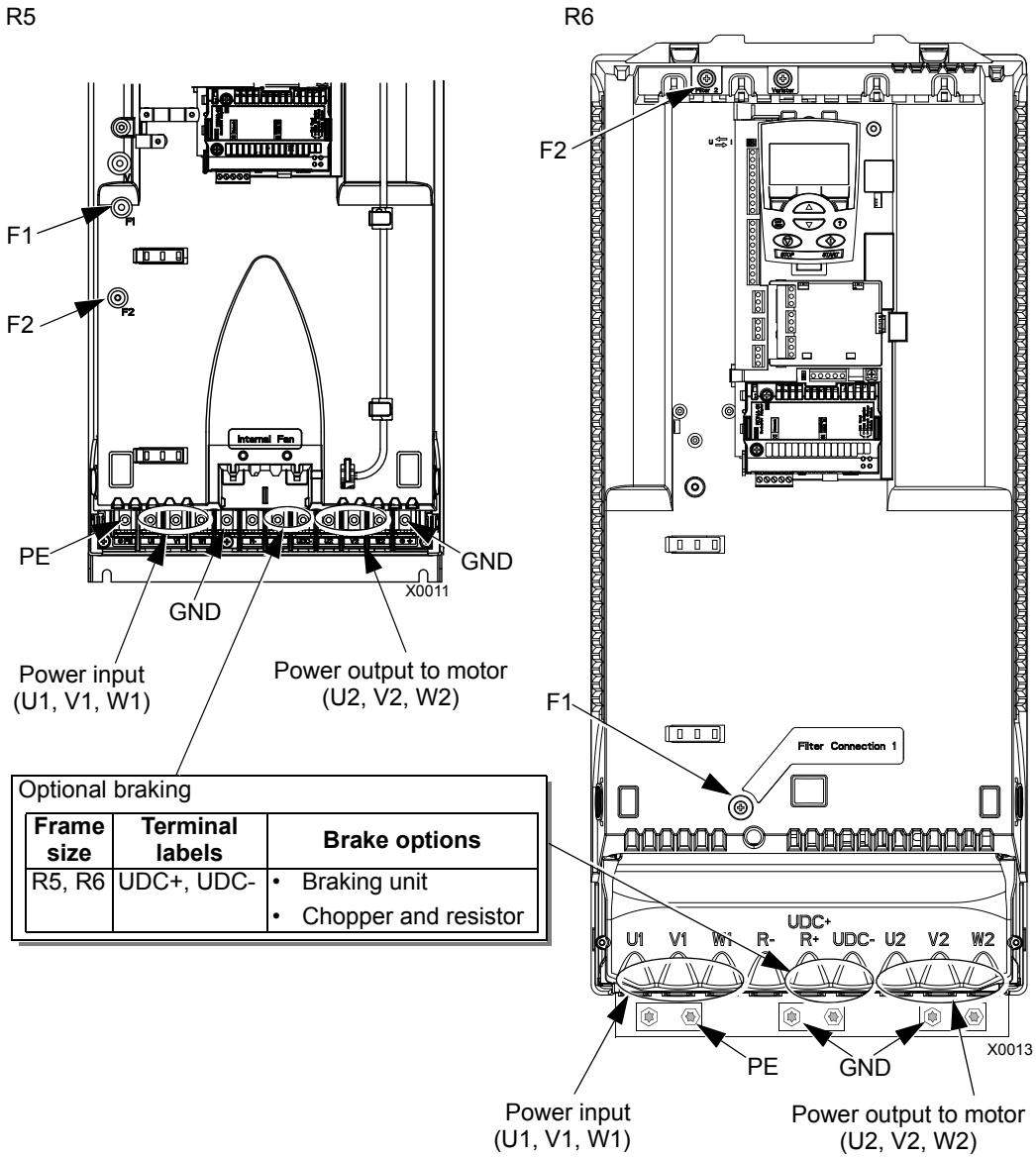

Optional braking

Frame size	Terminal labels	Brake options
R5, R6	UDC+, UDC-	• Braking unit • Chopper and resistor

WARNING! To avoid danger, or damage to the drive, on IT systems and corner grounded TN systems, see section *Disconnecting the internal EMC filter* on page *23*.

Disconnecting the internal EMC filter

On certain types of systems, you must disconnect the internal EMC filter, otherwise the system will be connected to ground potential through the EMC filter capacitors, which might cause danger, or damage the drive.

Note: When the internal EMC filter is disconnected, the drive is not EMC compatible.

The following table shows the installation rules for the EMC filter screws in order to connect or disconnect the filter, depending on the system type and the frame size. For more information on the different system types, see *IT systems* on page *280* and *Corner grounded TN systems* on page *279*.

The locations of screws EM1 and EM3 are shown in the diagram on page *21*. The locations of screws F1 and F2 are shown in the diagram on page *22*.

Frame sizes	Screw	Symmetrically grounded TN systems (TN-S systems)	Corner grounded TN systems	IT systems (ungrounded or high-resistance-grounded [> 30 ohm])
R1…R3	EM1	x	x	•
	EM3[1]	x	•	•
R4	EM1	x	x	–
	EM3[1]	x	–	–
R5…R6	F1	x	x	–
	F2	x	x	–

x = Install the screw. (EMC filter will be connected.)
• = Replace the screw with the provided polyamide screw. (EMC filter will be disconnected.)
– = Remove the screw. (EMC filter will be disconnected.)

[1] ACS550-U1 drives are shipped with screw EM3 already removed.

Control terminals table

The following provides information for connecting control wiring at X1 on the drive.

	X1		Hardware description
Analog I/O	1	SCR	Terminal for signal cable shield (screen). (Connected internally to chassis ground.)
	2	AI1	Analog input channel 1, programmable. Default[2] = frequency reference. Resolution 0.1%, accuracy ±1%.
			Two different DIP switch types can be used.
			J1: AI1 OFF: 0…10 V (R_i = 312 kohm) 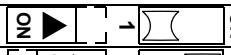
			J1: AI1 ON: 0…20 mA (R_i = 100 ohm) 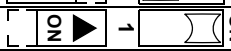
	3	AGND	Analog input circuit common (connected internally to chassis gnd. through 1 Mohm).
	4	+10 V	Potentiometer reference source: 10 V ±2%, max. 10 mA (1 kohm $\leq R \leq$ 10 kohm).
	5	AI2	Analog input channel 2, programmable. Default[2] = not used. Resolution 0.1%, accuracy ±1%.
			Two different DIP switch types can be used.
			J1: AI2 OFF: 0…10 V (R_i = 312 kohm) 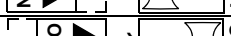
			J1: AI2 ON: 0…20 mA (R_i = 100 ohm) 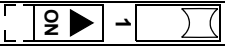
	6	AGND	Analog input circuit common (connected internally to chassis gnd. through 1 Mohm).
	7	AO1	Analog output, programmable. Default[2] = frequency. 0…20 mA (load < 500 ohm). Accuracy ±3%.
	8	AO2	Analog output, programmable. Default[2] = current. 0…20 mA (load < 500 ohm). Accuracy ±3%.
	9	AGND	Analog output circuit common (connected internally to chassis gnd. through 1 Mohm).
Digital inputs[1]	10	+24V	Auxiliary voltage output 24 V DC / 250 mA (reference to GND), short circuit protected.
	11	GND	Auxiliary voltage output common (connected internally as floating).
	12	DCOM	Digital input common. To activate a digital input, there must be ≥ +10 V (or ≤ -10 V) between that input and DCOM. The 24 V may be provided by the ACS550 (X1-10) or by an external 12…24 V source of either polarity.
	13	DI1	Digital input 1, programmable. Default[2] = start/stop.
	14	DI2	Digital input 2, programmable. Default[2] = fwd/rev.
	15	DI3	Digital input 3, programmable. Default[2] = constant speed sel (code).
	16	DI4	Digital input 4, programmable. Default[2] = constant speed sel (code).
	17	DI5	Digital input 5, programmable. Default[2] = ramp pair selection (code).
	18	DI6	Digital input 6, programmable. Default[2] = not used.

	X1		Hardware description
Relay outputs	19	RO1C	Relay output 1, programmable. Default[2] = Ready Maximum: 250 V AC / 30 V DC, 2 A Minimum: 500 mW (12 V, 10 mA)
	20	RO1A	
	21	RO1B	
	22	RO2C	Relay output 2, programmable. Default[2] = Running Maximum: 250 V AC / 30 V DC, 2 A Minimum: 500 mW (12 V, 10 mA)
	23	RO2A	
	24	RO2B	
	25	RO3C	Relay output 3, programmable. Default[2] = Fault (-1) Maximum: 250 V AC / 30 V DC, 2 A Minimum: 500 mW (12 V, 10 mA)
	26	RO3A	
	27	RO3B	

[1] Digital input impedance 1.5 kohm. Maximum voltage for digital inputs is 30 V.

[2] Default values depend on the macro used. Values specified are for the default macro. See chapter *Application macros* on page *73*.

Note: Terminals 3, 6 and 9 are at the same potential.

Note: For safety reasons the fault relay signals a "fault" when the ACS550 is powered down.

WARNING! All ELV (Extra Low Voltage) circuits connected to the drive must be used within a zone of equipotential bonding, i.e. within a zone where all simultaneously accessible conductive parts are electrically connected to prevent hazardous voltages appearing between them. This is accomplished by a proper factory grounding.

The terminals on the control board as well as on the optional modules attachable to the board fulfil the Protective Extra Low Voltage (PELV) requirements stated in EN 50178, provided that the external circuits connected to the terminals also fulfil the requirements and the installation site is below 2000 m (6562 ft).

You can wire the digital input terminals in either a PNP or NPN configuration.

PNP connection (source)

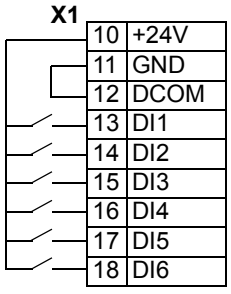

NPN connection (sink)

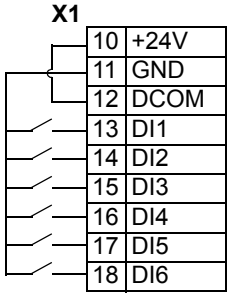

Install the wiring

Checking motor and motor cable insulation

WARNING! Check the motor and motor cable insulation before connecting the drive to input power. For this test, make sure that motor cables are NOT connected to the drive.

1. Complete motor cable connections to the motor, but NOT to the drive output terminals (U2, V2, W2).
2. Measure the insulation resistance between each phase conductor and the Protective Earth conductor using a measuring voltage of 500 V DC. The insulation resistance of an ABB motor must exceed 10 Mohm (reference value at 25 °C or 77 °F). For the insulation resistance of other motors, please consult the manufacturer's instructions. **Note:** Moisture inside the motor casing will reduce the insulation resistance. If moisture is suspected, dry the motor and repeat the measurement.

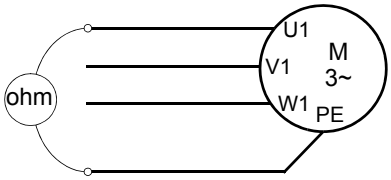

*Wiring **IP21** / UL type 1 enclosure with **cables***

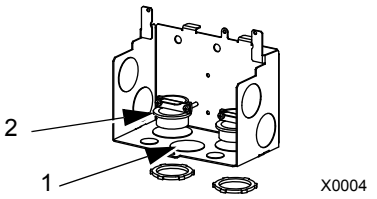

1. Open the appropriate knockouts in the conduit/gland box. (See section *Conduit/Gland kit* on page *19*.)
2. Install the cable clamps for the power/motor cables.

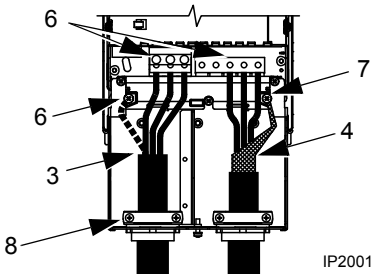

3. On the input power cable, strip the sheathing back far enough to route individual wires.
4. On the motor cable, strip the sheathing back far enough to expose the copper wire shield so that the shield can be twisted into a bundle (pig-tail). Keep the bundle not longer than five times its width to minimize noise radiation.
   360° grounding under the clamp is recommended for the motor cable to minimize noise radiation. In this case, remove the sheathing at the cable clamp.
5. Route both cables through the clamps.
6. Strip and connect the power/motor wires and the power ground wire to the drive terminals. See the table on the right for tightening torques.

Frame size	Tightening torque	
	N·m	lb·ft
R1, R2	1.4	1
R3	2.5	1.8
R4	5.6; PE: 2	4; PE 1.5
R5	15	11
R6	40; PE: 8	30; PE: 6

Note: For R6 frame size, refer to section *Power terminal considerations – R6 frame size* on page *281*.

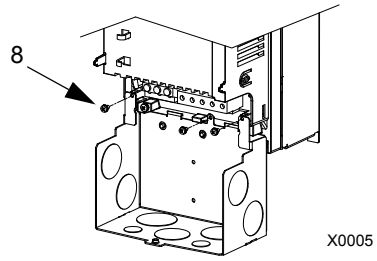

7. Connect the bundle (pig-tail) created from the motor cable shield to the GND terminal.
8. Install conduit/gland box and tighten the cable clamps.
9. Install the cable clamp(s) for the control cable(s). (Power/motor cables and clamps not shown in the figure.)

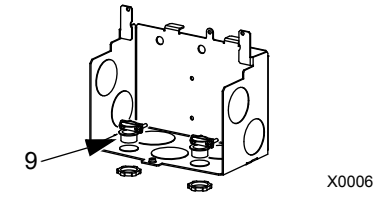

10. Strip control cable sheathing and twist the copper shield into a bundle (pig-tail).
11. Route control cable(s) through clamp(s) and tighten clamp(s).
12. Connect the ground shield bundle (pig-tail) for digital and analog I/O cables at X1-1. (Ground only at the drive end.)
13. Strip and connect the individual control wires to the drive terminals. See section *Control terminals table* on page *24*. Use a tightening torque of 0.4 N·m (0.3 lb·ft).
14. Install the conduit/gland box cover (1 screw).

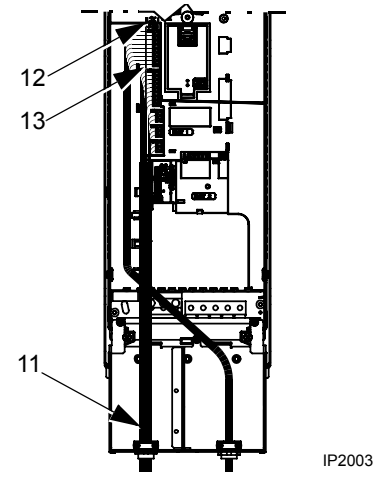

*Wiring **IP21** / UL type 1 enclosure with **conduit***

1. Open the appropriate knockouts in the conduit/gland box. (See section *Conduit/Gland kit* on page *19*.)
2. Install thin-wall conduit clamps (not supplied).

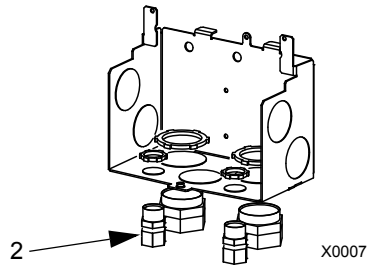

3. Install conduit/gland box.
4. Connect conduit runs to box.

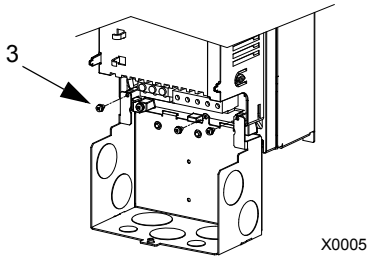

5. Route input power and motor wiring through conduits (must be separate conduit runs).
6. Strip wires.
7. Connect power, motor and ground wires to the drive terminals. See the table on the right for tightening torques.

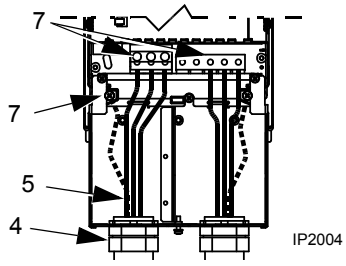

Note: For R6 frame size, refer to section *Power terminal considerations – R6 frame size* on page *281*.

Frame size	Tightening torque	
	N·m	lb·ft
R1, R2	1.4	1
R3	2.5	1.8
R4	5.6; PE: 2	4; PE 1.5
R5	15	11
R6	40; PE: 8	30; PE: 6

8. Route the control cable through the conduit (must be separate from input power and motor conduit runs).
9. Strip the control cable sheathing and twist the copper shield into a bundle (pig-tail).
10. Connect the ground shield bundle (pig-tail) for digital and analog I/O cables at X1-1. (Ground only at the drive end.)
11. Strip and connect the individual control wires to the drive terminals. See section *Control terminals table* on page *24*. Use a tightening torque of 0.4 N·m (0.3 lb·ft).
12. Install the conduit/gland box cover (1 screw).

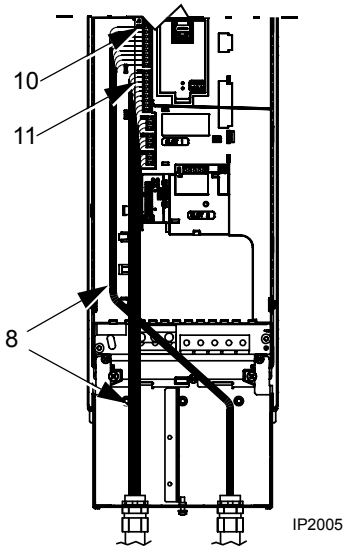

*Wiring **IP54** / UL type 12 enclosure with **cables***

1. Cut the cable seals as needed for the power, motor and control cables. The cable seals are cone-shaped, rubber seals on the bottom of the drive. The conical part of the seals must face downwards when the seals are inserted in the lead-through plate holes.

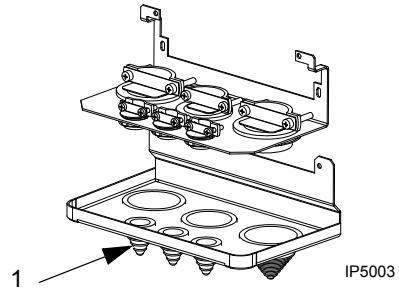

2. On the input power cable, strip the sheathing back far enough to route individual wires.
3. On the motor cable, strip the sheathing back far enough to expose the copper wire shield so that the shield can be twisted into a bundle (pig-tail). Keep the bundle not longer than five times its width to minimize noise radiation.
   360° grounding under the clamp is recommended for the motor cable to minimize noise radiation. In this case, remove the sheathing at the cable clamp.
4. Route both cables through the clamps and tighten the clamps.
5. Strip and connect the power/motor wires and the power ground wire to the drive terminals. See the table on the right for tightening torques.

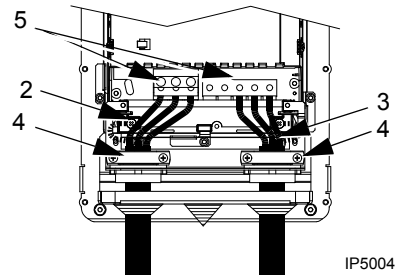

Frame size	Tightening torque	
	N·m	lb·ft
R1, R2	1.4	1
R3	2.5	1.8
R4	5.6; PE: 2	4; PE 1.5
R5	15	11
R6	40; PE: 8	30; PE: 6

Note: For R6 frame size, refer to section *Power terminal considerations – R6 frame size* on page *281*.

6. Connect the bundle (pig-tail) created from the motor cable shield to the GND terminal.
7. Strip control cable sheathing and twist the copper shield into a bundle (pig-tail).
8. Route control cable(s) through clamp(s) and tighten clamp(s).
9. Connect the ground shield bundle (pig-tail) for digital and analog I/O cables at X1-1. (Ground only at the drive end.)
10. Strip and connect the individual control wires to the drive terminals. See section *Control terminals table* on page *24*. Use a tightening torque of 0.4 N·m (0.3 lb·ft).

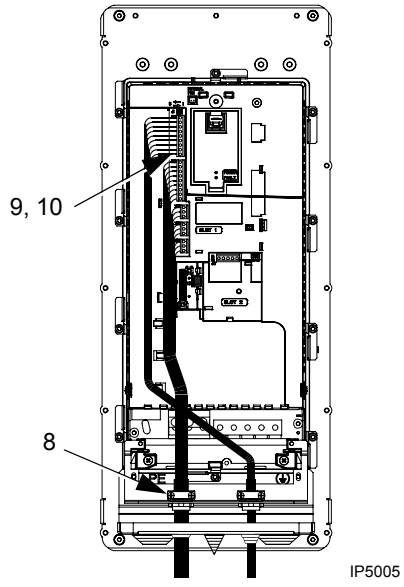

*Wiring **IP54** / UL type 12 enclosure with **conduit***

1. Remove and discard the cable seals where conduit will be installed. (The cable seals are cone-shaped, rubber seals on the bottom of the drive.)

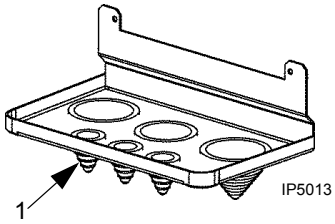

2. For each conduit run, install water tight conduit connectors (not supplied).

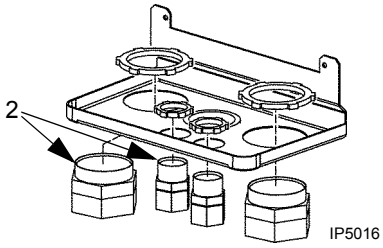

3. Route the power wiring through the conduit.
4. Route the motor wiring through the conduit.
5. Strip the wires.
6. Connect the power, motor and ground wires to the drive terminals. See the table on the right for tightening torques.

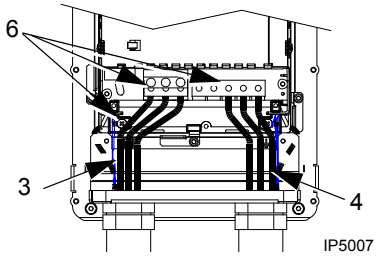

Note: For R6 frame size, refer to section *Power terminal considerations – R6 frame size* on page *281*.

Frame size	Tightening torque	
	N·m	**lb·ft**
R1, R2	1.4	1
R3	2.5	1.8
R4	5.6; PE: 2	4; PE 1.5
R5	15	11
R6	40; PE: 8	30; PE: 6

7. Route the control cable through the conduit.
8. Strip the control cable sheathing and twist the copper shield into a bundle (pig-tail).
9. Connect the ground shield bundle (pig-tail) for digital and analog I/O cables at X1-1. (Ground only at the drive end.)
10. Strip and connect the individual control wires to the drive terminals. See section *Control terminals table* on page *24*. Use a tightening torque of 0.4 N·m (0.3 lb·ft).

Check installation

Before applying power, perform the following checks.

✓	Check
	Installation environment conforms to the drive's specifications for ambient conditions.
	The drive is mounted securely.
	Space around the drive meets the drive's specifications for cooling.
	The motor and driven equipment are ready for start.
	For IT systems and corner grounded TN systems: The internal EMC filter is disconnected (see section *Disconnecting the internal EMC filter* on page *23*).
	The drive is properly grounded.
	The input power (mains) voltage matches the drive nominal input voltage.
	The input power (mains) connections at U1, V1 and W1 are connected and tightened as specified.
	The input power (mains) fuses are installed.
	The motor connections at U2, V2 and W2 are connected and tightened as specified.
	The motor cable is routed away from other cables.
	NO power factor compensation capacitors are in the motor cable.
	The control connections are connected and tightened as specified.
	NO tools or foreign objects (such as drill shavings) are inside the drive.
	NO alternate power source for the motor (such as a bypass connection) is connected – no voltage is applied to the output of the drive.

Reinstall the cover

IP21 / UL type 1

1. Align the cover and slide it on.
2. Tighten the captive screw.
3. Reinstall the control panel.
4. Continue with start-up. See chapter *Start-up, control with I/O and ID Run* on page *33*.

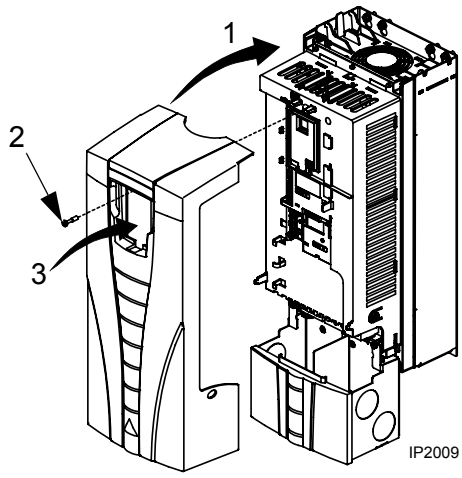

IP54 / UL type 12

1. Align the cover and slide it on.
2. Tighten the captive screws around the edge of the cover.
3. Slide the hood down over the top of the cover. (Only needed for UL type 12 installations.)
4. Install the two screws that attach the hood. (Only needed for UL type 12 installations.)
5. Install the control panel.

Note: The control panel window must be closed to comply with IP54 / UL type 12.

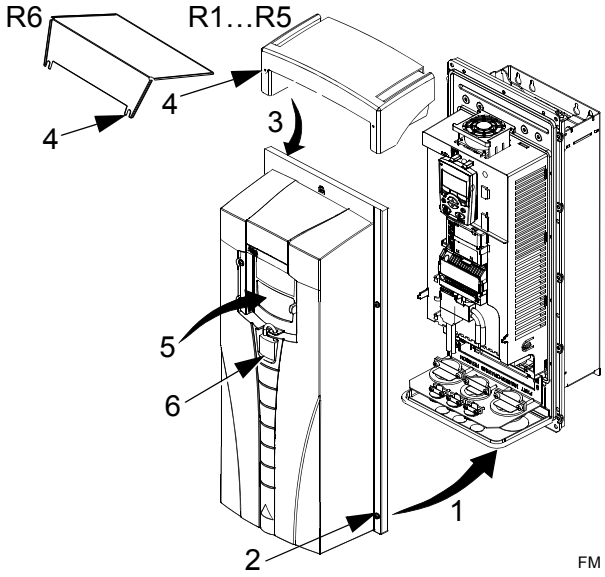

6. Optional: Add a lock (not supplied) to secure the control panel window.
7. Continue with start-up. See chapter *Start-up, control with I/O and ID Run* on page *33*.

Start-up, control with I/O and ID Run

The chapter instructs how to:

- perform the start-up
- start, stop, change the direction of rotation and adjust the speed of the motor through the I/O interface
- perform an Identification Run for the drive.

Using the control panel to do these tasks is explained briefly in this chapter. For details on how to use the control panel, refer to chapter *Control panels* starting on page *43*.

How to start up the drive

How you start up the drive depends on the control panel you have.

- **If you have an Assistant Control Panel**, you can either run the Start-up Assistant (see section *How to perform the guided start-up* on page *38*) or perform a limited start-up (see section *How to perform the limited start-up* on page *33*).

  The Start-up Assistant, which is included in the Assistant Control Panel only, guides you through all essential settings to be done. In the limited start-up, the drive gives no guidance; you go through the very basic settings by following the instructions given in the manual.

- **If you have a Basic Control Panel**, follow the instructions given in section *How to perform the limited start-up* on page *33*.

How to perform the limited start-up

For the limited start-up, you can use the Basic Control Panel or the Assistant Control Panel. The instructions below are valid for both control panels, but the displays shown are the Basic Control Panel displays, unless the instruction applies to the Assistant Control Panel only.

Before you start, ensure that you have the motor nameplate data on hand.

SAFETY

The start-up may only be carried out by a qualified electrician.

The safety instructions given in chapter *Safety* must be followed during the start-up procedure.

The drive will start up automatically at power up, if the external run command is on.

☐ Check the installation. See the checklist in chapter *Installation*, page *31*.

☐ Check that the starting of the motor does not cause any danger.
De-couple the driven machine if:
- there is a risk of damage in case of incorrect direction of rotation, or
- an ID Run needs to be performed during the drive start-up. ID Run is essential only in applications that require the ultimate in motor control accuracy.

POWER-UP

☐ Apply input power.
The Basic Control Panel powers up into the Output mode.

The Assistant Control Panel asks if you want to run the Start-up Assistant. If you press EXIT, the Start-up Assistant is not run, and you can continue with manual start-up in a similar manner as described below for the Basic Control Panel.

```
REM          0.0 Hz
OUTPUT          FWD
```

```
REM ↻CHOICE
Do you want to
use the start-up
assistant?
 Yes
 No
EXIT | 00:00 | OK
```

MANUAL ENTRY OF START-UP DATA (*Group 99: START-UP DATA*)

☐ If you have an Assistant Control Panel, select the language (the Basic Control Panel does not support languages). See parameter *9901* for the values of the available language alternatives. You find parameter descriptions in section *Complete parameter descriptions* starting on page *102*.

```
REM ↻PAR EDIT
9901 LANGUAGE
     ENGLISH
[0]
CANCEL | 00:00 | SAVE
```

The general parameter setting procedure is described below for the Basic Control Panel. You find more detailed instructions for the Basic Control Panel on page *69*. Instructions for the Assistant Control Panel are on page *51*.

The general parameter setting procedure:

1. To go to the Main menu, press if the bottom line shows OUTPUT; otherwise press repeatedly until you see MENU at the bottom.

```
REM          rEF
        MENU     FWD
```

2. Press keys ▲/▼ until you see "PAr" and press .

```
REM          -01-
        PAR      FWD
```

3. Find the appropriate parameter group with keys ▲/▼ and press .

```
REM          2001
        PAR      FWD
```

4. Find the appropriate parameter in the group with keys ▲/▼.

```
REM          2002
        PAR      FWD
```

5. Press and hold for about two seconds until the parameter value is shown with SET under the value.

```
REM          1500 rpm
        PAR SET  FWD
```

6. Change the value with keys ▲/▼. The value changes faster while you keep the key pressed down.

```
REM          1600 rpm
        PAR SET  FWD
```

7. Save the parameter value by pressing .

```
REM          2002
        PAR      FWD
```

☐ Select the application macro (parameter *9902*). The general parameter setting procedure is given above.

The default value 1 (ABB STANDARD) is suitable in most cases.

REM 9902 PAR FWD

☐ Select the motor control mode (parameter *9904*).

1 (VECTOR:SPEED) is suitable in most cases. 2 (VECTOR:TORQ) is suitable for torque control applications. 3 (SCALAR:FREQ) is recommended

- for multimotor drives when the number of the motors connected to the drive is variable
- when the nominal current of the motor is less than 20% of the nominal current of the drive
- when the drive is used for test purposes with no motor connected.

REM 9904 PAR FWD

☐ Enter the motor data from the motor nameplate:

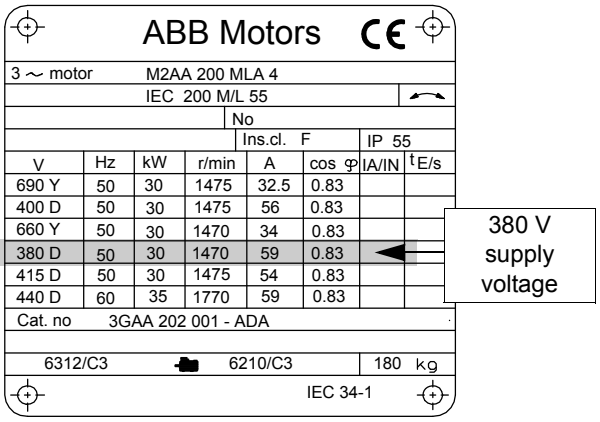

Note: Set the motor data to exactly the same value as on the motor nameplate. For example, if the motor nominal speed is 1470 rpm on the nameplate, setting the value of parameter *9908* MOTOR NOM SPEED to 1500 rpm results in the wrong operation of the drive.

- motor nominal voltage (parameter *9905*)

REM 9905 PAR FWD

- motor nominal current (parameter *9906*)

  Allowed range: 0.2…2.0 · I_{2hd} A

REM 9906 PAR FWD

- motor nominal frequency (parameter *9907*)

REM 9907 PAR FWD

- motor nominal speed (parameter *9908*)

REM 9908 PAR FWD

- motor nominal power (parameter *9909*)

REM 9909 PAR FWD

☐ Select the motor identification method (parameter *9910*).

The default value 0 (OFF/IDMAGN) using the identification magnetization is suitable for most applications. It is applied in this basic start-up procedure. Note however that this requires that:

- parameter *9904* is set to 1 (VECTOR:SPEED) or 2 (VECTOR:TORQ), or
- parameter *9904* is set to 3 (SCALAR:FREQ) and parameter *2101* is set to 3 (SCALAR FLYST) or 5 (FLY + BOOST).

If your selection is 0 (OFF/IDMAGN), move to the next step.

Value 1 (ON), which performs a separate ID Run, should be selected if:

- vector control mode is used [parameter *9904* = 1 (VECTOR:SPEED) or 2 (VECTOR:TORQ)], and/or
- the operation point is near zero speed, and/or
- operation at torque range above the motor nominal torque over a wide speed range and without any measured speed feedback is required.

If you decide to do the ID Run [value 1 (ON)], continue by following the separate instructions given on page *41* in section *How to perform the ID Run* and then return to step *DIRECTION OF THE MOTOR ROTATION* on page *36*.

IDENTIFICATION MAGNETIZATION WITH ID RUN SELECTION 0 (OFF/IDMAGN)

☐ As stated above, the identification magnetization is performed only if:

- parameter *9904* is set to 1 (VECTOR:SPEED) or 2 (VECTOR:TORQ), or
- parameter *9904* is set to 3 (SCALAR:FREQ) and parameter *2101* is set to 3 (SCALAR FLYST) or 5 (FLY + BOOST).

Press key (LOC/REM) to switch to local control (LOC shown on the left).

Press (◇) to start the drive. The motor model is now calculated by magnetizing the motor for 10 to 15 s at zero speed (motor not rotating).

DIRECTION OF THE MOTOR ROTATION

☐ Check the direction of the motor rotation.

- If the drive is in remote control (REM shown on the left), switch to local control by pressing (LOC/REM).
- To go to the Main menu, press (▽) if the bottom line shows OUTPUT; otherwise press (▽) repeatedly until you see MENU at the bottom.
- Press keys (▲)/(▼) until you see "rEF" and press (▽).
- Increase the frequency reference from zero to a small value with key (▲).
- Press (◇) to start the motor.
- Check that the actual direction of the motor is the same as indicated on the display (FWD means forward and REV reverse).
- Press (▽) to stop the motor.

	To change the direction of the motor rotation: • Disconnect input power from the drive, and wait 5 minutes for the intermediate circuit capacitors to discharge. Measure the voltage between each input terminal (U1, V1 and W1) and earth with a multimeter to ensure that the drive is discharged. • Exchange the position of two motor cable phase conductors at the drive output terminals or at the motor connection box. • Verify your work by applying input power and repeating the check as described above.	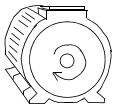 forward direction 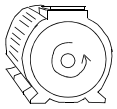 reverse direction
	SPEED LIMITS AND ACCELERATION/DECELERATION TIMES	
☐	Set the minimum speed (parameter *2001*).	LOC 2001 PAR FWD
☐	Set the maximum speed (parameter *2002*).	LOC 2002 PAR FWD
☐	Set the acceleration time 1 (parameter *2202*). **Note:** Check also acceleration time 2 (parameter *2205*) if two acceleration times will be used in the application.	LOC 2202 PAR FWD
☐	Set the deceleration time 1 (parameter *2203*). **Note:** Set also deceleration time 2 (parameter *2206*) if two deceleration times will be used in the application.	LOC 2203 PAR FWD
	SAVING A USER PARAMETER SET AND FINAL CHECK	
☐	The start-up is now completed. However, it might be useful at this stage to set the parameters required by your application and save the settings as a user parameter set as instructed in section *User parameter sets* on page *83*.	LOC 9902 PAR FWD
☐	Check that the drive state is OK. Basic Control Panel: Check that there are no faults or alarms shown on the display. If you want to check the LEDs on the front of the drive, switch first to remote control (otherwise a fault is generated) before removing the panel and verifying that the red LED is not lit and the green LED is lit but not blinking. Assistant Control Panel: Check that there are no faults or alarms shown on the display and that the panel LED is green and does not blink.	
	The drive is now ready for use.	

How to perform the guided start-up

To be able to perform the guided start-up, you need the Assistant Control Panel.

Before you start, ensure that you have the motor nameplate data on hand.

SAFETY

The start-up may only be carried out by a qualified electrician.

The safety instructions given in chapter *Safety* must be followed during the start-up procedure.

The drive will start up automatically at power up, if the external run command is on.

☐ Check the installation. See the checklist in chapter *Installation*, page *31*.

☐ Check that the starting of the motor does not cause any danger.
De-couple the driven machine if:
- there is a risk of damage in case of incorrect direction of rotation, or
- an ID Run needs to be performed during the drive start-up. ID Run is essential only in applications that require the ultimate in motor control accuracy.

POWER-UP

☐ Apply input power. The control panel first asks if you want to use the Start-up Assistant.
- Press OK (when Yes is highlighted) to run the Start-up Assistant.
- Press EXIT if you do not want to run the Start-up Assistant.
- Press key ▼ to highlight No and then press OK if you want to make the panel ask (or not ask) the question about running the Start-up Assistant again the next time you switch on the power to the drive.

```
REM ↻CHOICE
Do you want to
use the start-up
assistant?
 Yes
 No
EXIT | 00:00 | OK
```

```
REM ↻CHOICE
Show start-up
assistant on
next boot?
 Yes
 No
EXIT | 00:00 | OK
```

SELECTING THE LANGUAGE

☐ If you decided to run the Start-up Assistant, the display then asks you to select the language. Scroll to the desired language with keys ▲/▼ and press SAVE to accept.
If you press EXIT, the Start-up Assistant is stopped.

```
REM ↻PAR EDIT
9901 LANGUAGE
    ENGLISH
[0]
EXIT | 00:00 | SAVE
```

STARTING THE GUIDED SET-UP

☐ The Start-up Assistant now guides you through the set-up tasks, starting with the motor set-up. Set the motor data to exactly the same value as on the motor nameplate.
Scroll to the desired parameter value with keys ▲/▼ and press SAVE to accept and continue with the Start-up Assistant.
Note: At any time, if you press EXIT, the Start-up Assistant is stopped and the display goes to the Output mode.

```
REM ↻PAR EDIT
9905 MOTOR NOM VOLT
     220 V
EXIT | 00:00 | SAVE
```

☐	After completing a set-up task, the Start-up Assistant suggests the next one. • Press OK (when **Continue** is highlighted) to continue with the suggested task. • Press key ▼ to highlight **Skip** and then press OK to move to the following task without doing the suggested task. • Press EXIT to stop the Start-up Assistant.	REM ↻CHOICE Do you want to continue with application setup? Continue Skip EXIT 00:00 OK
SAVING A USER PARAMETER SET AND FINAL CHECK		
☐	The start-up is now completed. However, it might be useful at this stage to set the parameters required by your application and save the settings as a user parameter set as instructed in section *User parameter sets* on page *83*.	
☐	After the whole set-up is completed, check there are no faults or alarms shown on the display and the panel LED is green and does not blink.	
The drive is now ready for use.		

How to control the drive through the I/O interface

The table below instructs how to operate the drive through the digital and analog inputs when:

- the motor start-up is performed, and
- the default (standard) parameter settings are valid.

Displays of the Basic Control Panel are shown as an example.

PRELIMINARY SETTINGS	
If you need to change the direction of rotation, check that parameter *1003* is set to 3 (REQUEST).	
Ensure that the control connections are wired according to the connection diagram given for the ABB Standard macro.	See section *ABB Standard macro* on page *74*.
Ensure that the drive is in remote control. Press key (LOC/REM) to switch between remote and local control.	In remote control, the panel display shows text REM.
STARTING AND CONTROLLING THE SPEED OF THE MOTOR	
Start by switching digital input DI1 on. Assistant Control Panel: The arrow starts rotating. It is dotted until the setpoint is reached. Basic Control Panel: Text FWD starts flashing fast and stops after the setpoint is reached	REM 0.0 Hz OUTPUT FWD
Regulate the drive output frequency (motor speed) by adjusting the voltage of analog input AI1.	REM 50.0 Hz OUTPUT FWD
CHANGING THE DIRECTION OF ROTATION OF THE MOTOR	
Reverse direction: Switch digital input DI2 on.	REM 50.0 Hz OUTPUT REV
Forward direction: Switch digital input DI2 off.	REM 50.0 Hz OUTPUT FWD
STOPPING THE MOTOR	
Switch digital input DI1 off. The motor stops. Assistant Control Panel: The arrow stops rotating. Basic Control Panel: Text FWD starts flashing slowly.	REM 0.0 Hz OUTPUT FWD

How to perform the ID Run

The drive estimates motor characteristics automatically using identification magnetization when the drive is started for the first time and after any motor parameter (*Group 99: START-UP DATA*) is changed. This is valid when parameter *9910* ID RUN has value 0 (OFF/IDMAGN), and

- parameter *9904* = 1 (VECTOR:SPEED) or 2 (VECTOR:TORQ), or
- parameter *9904* = 3 (SCALAR:FREQ) and parameter *2101* = 3 (SCALAR FLYST) or 5 (FLY + BOOST).

In most applications there is no need to perform a separate ID Run [*9910* ID RUN = 1 (ON)]. The ID Run should be selected if:

- vector control mode is used [parameter *9904* = 1 (VECTOR:SPEED) or 2 (VECTOR:TORQ)], and/or
- the operation point is near zero speed, and/or
- operation at torque range above the motor nominal torque over a wide speed range and without any measured speed feedback is required.

Note: If motor parameters (*Group 99: START-UP DATA*) are changed after the ID Run, it must be repeated.

ID Run procedure

The general parameter setting procedure is not repeated here. For Assistant Control Panel see page *51* and for Basic Control Panel page *69* in chapter *Control panels*.

PRE-CHECK

WARNING! The motor will run at up to approximately 50…80% of the nominal speed during the ID Run. The motor will rotate in the forward direction. **Ensure that it is safe to run the motor before performing the ID Run!**

- ☐ De-couple the motor from the driven equipment.
- ☐ Check that the values of the motor data parameters *9905*…*9909* are equivalent to those on the motor nameplate, as shown in the steps on page *35*.
- ☐ If parameter values (*Group 01: OPERATING DATA* to *Group 98: OPTIONS*) are changed before the ID Run, check that the new settings meet the following conditions:
- ☐ *2001* MINIMUM SPEED ≤ 0 rpm
- ☐ *2002* MAXIMUM SPEED > 80% of the motor rated speed
- ☐ *2003* MAXIMUM CURRENT ≥ I_{2hd}
- ☐ *2017* MAX TORQUE 1 > 50% or *2018* MAX TORQUE 2 > 50%, depending on which limit is in use according to parameter *2014* MAX TORQUE SEL.
- ☐ Check that the Run Enable signal is on (parameter *1601*).
- ☐ Ensure that the panel is in local control (LOC shown on the left / at the top). Press key (LOC REM) to switch between local and remote control.

ID RUN WITH THE ASSISTANT CONTROL PANEL		
☐	Change parameter *9910* ID RUN to 1 (ON). Save the new setting by pressing SAVE.	LOC ↻PAR EDIT 9910 ID RUN ON [1] CANCEL 00:00 SAVE
☐	If you want to monitor actual values during the ID Run, go to the Output mode by pressing EXIT repeatedly until you get there.	LOC ↻ 50.0Hz 0.0 Hz 0.0 A 0.0 % DIR 00:00 MENU
☐	Press ⊕ to start the ID Run. The panel keeps switching between the display that was shown when you started the ID Run and the alarm display presented on the right. In general, it is recommended not to press any control panel keys during the ID Run. However, you can stop the ID Run at any time by pressing ⊖.	LOC ↻ALARM ALARM 2019 ID run 00:00
	After the ID Run is completed, the alarm display is not shown any more. If the ID Run fails, the fault display presented on the right is shown.	LOC ↻FAULT FAULT 11 ID RUN FAIL 00:00
ID RUN WITH THE BASIC CONTROL PANEL		
☐	Change parameter *9910* ID RUN to 1 (ON). Save the new setting by pressing ▽.	LOC 9910 PAR FWD LOC 1 PAR SET FWD
☐	If you want to monitor actual values during the ID Run, go to the Output mode by pressing ▽ repeatedly until you get there.	LOC 0.0 Hz OUTPUT FWD
☐	Press ⊕ to start the ID Run. The panel keeps switching between the display that was shown when you started the ID Run and the alarm display presented on the right. In general, it is recommended not to press any control panel keys during the ID Run. However, you can stop the ID Run at any time by pressing ⊖.	LOC A2019 FWD
	After the ID Run is completed, the alarm display is not shown any more. If the ID Run fails, the fault display presented on the right is shown.	LOC F0011 FWD

Control panels

About control panels

Use a control panel to control the drive, read status data and adjust parameters. The drive works with either of two different control panel types:

- Basic Control Panel – This panel (described in section *Basic Control Panel* on page *64*) provides basic tools for manual entry of parameter values.
- Assistant Control Panel – This panel (described below) includes pre-programmed assistants to automate the most common parameter setups. The panel provides language support. It is available with different language sets.

Compatibility

The manual is compatible with the following panel versions:

- Basic Control Panel: ACS-CP-C Rev. M or later
- Assistant Control Panel (Area 1): ACS-CP-A Rev. F or later
  (new panel series manufactured since 2007 with serial number XYYWWRXXXX, where year YY = 07 or greater and revision R = F, G, E, …)
- Assistant Control Panel (Asia): ACS-CP-D Rev. Q or later

See page *47* for how to find out the version of your Assistant Control Panel. See parameter *9901* LANGUAGE to see the languages supported by the different Assistant Control Panels.

Assistant Control Panel

Features

The Assistant Control Panel features:

- alphanumeric control panel with an LCD display
- language selection for the display
- Start-up Assistant to ease drive commissioning
- copy function – parameters can be copied to the control panel memory for later transfer to other drives or for backup of a particular system.
- context sensitive help
- real time clock.

Overview

The following table summarizes the key functions and displays on the Assistant Control Panel.

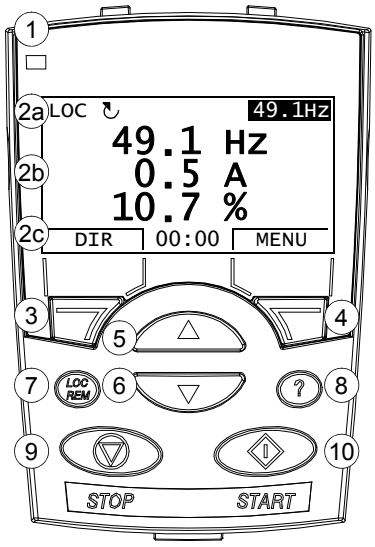

No.	Use
1	Status LED – Green for normal operation. If LED is flashing, or red, see section *Diagnostic displays* on page *253*.
2	LCD display – Divided into three main areas: a. Status line – variable, depending on the mode of operation, see section *Status line* on page *45*. b. Center – variable; in general, shows signal and parameter values, menus or lists. Shows also faults and alarms. c. Bottom line – shows current functions of the two soft keys and, if enabled, the clock display.
3	Soft key 1 – Function depends on the context. The text in the lower left corner of the LCD display indicates the function.
4	Soft key 2 – Function depends on the context. The text in the lower right corner of the LCD display indicates the function.
5	Up – • Scrolls up through a menu or list displayed in the center of the LCD display. • Increments a value if a parameter is selected. • Increments the reference value if the upper right corner is highlighted. Holding the key down changes the value faster.
6	Down – • Scrolls down through a menu or list displayed in the center of the LCD display. • Decrements a value if a parameter is selected. • Decrements the reference value if the upper right corner is highlighted. Holding the key down changes the value faster.
7	LOC/REM – Changes between local and remote control of the drive.
8	Help – Displays context sensitive information when the key is pressed. The information displayed describes the item currently highlighted in the center of the display.
9	STOP – Stops the drive in local control.
10	START – Starts the drive in local control.

Status line

The top line of the LCD display shows the basic status information of the drive.

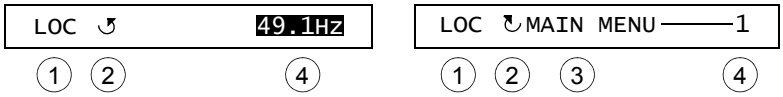

No.	Field	Alternatives	Significance
1	Control location	LOC	Drive control is local, that is, from the control panel.
		REM	Drive control is remote, such as the drive I/O or fieldbus.
2	State	↻	Forward shaft direction
		↺	Reverse shaft direction
		Rotating arrow	Drive is running at setpoint.
		Dotted rotating arrow	Drive is running but not at setpoint.
		Stationary arrow	Drive is stopped.
		Dotted stationary arrow	Start command is present, but the motor is not running, e.g. because start enable is missing.
3	Panel operation mode		• Name of the current mode • Name of the list or menu shown • Name of the operation state, e.g. PAR EDIT.
4	Reference value or number of the selected item		• Reference value in the Output mode • Number of the highlighted item, e.g mode, parameter group or fault.

Operation

You operate the control panel with menus and keys. The keys include two context-sensitive soft keys, whose current function is indicated by the text shown in the display above each key.

You select an option, e.g. operation mode or parameter, by scrolling the ▲ and ▼ arrow keys until the option is highlighted (in reverse video) and then pressing the relevant soft key. With the right soft key you usually enter a mode, accept an option or save the changes. The left soft key is used to cancel the made changes and return to the previous operation level.

The Assistant Control Panel has nine panel modes: Output, Parameters, Assistants, Changed Parameters, Fault Logger, Time and Date, Parameter Backup, I/O Settings and Fault. The operation in the first eight modes is described in this chapter. When a fault or alarm occurs, the panel goes automatically to the Fault mode showing the fault or alarm. You can reset it in the Output or Fault mode (see chapter *Diagnostics*).

Initially, the panel is in the Output mode, where you can start, stop, change the direction, switch between local and remote control, modify the reference value and monitor up to three actual values. To do other tasks, go first to the Main menu and select the appropriate mode on the menu. The status line (see section *Status line* on page *45*) shows the name of the current menu, mode, item or state.

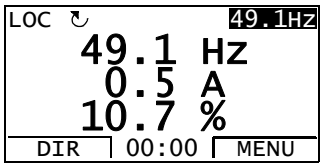

How to do common tasks

The table below lists common tasks, the mode in which you can perform them and the page number where the steps to do the task are described in detail.

Task	Mode	Page
How to get help	Any	*47*
How to find out the panel version	At power up	*47*
How to adjust the display contrast	Output	*50*
How to switch between local and remote control	Any	*48*
How to start and stop the drive	Any	*48*
How to change the direction of the motor rotation	Output	*49*
How to set the speed, frequency or torque reference	Output	*50*
How to change the value of a parameter	Parameters	*51*
How to select the monitored signals	Parameters	*52*
How to do guided tasks (specification of related parameter sets) with assistants	Assistants	*53*
How to view and edit changed parameters	Changed Parameters	*56*
How to view faults	Fault Logger	*57*
How to reset faults and alarms	Output, Fault	*259*
How to show/hide the clock, change date and time formats, set the clock and enable/disable automatic clock transitions according to the daylight saving changes	Time and Date	*58*
How to copy parameters from the drive to the control panel	Parameter Backup	*61*
How to restore parameters from the control panel to the drive	Parameter Backup	*61*
How to view backup information	Parameter Backup	*62*
How to edit and change parameter settings related to I/O terminals	I/O Settings	*63*

How to get help

Step	Action	Display
1.	Press (?) to read the context-sensitive help text for the item that is highlighted. If help text exists for the item, it is shown on the display.	LOC ↻PAR GROUPS——10 01 OPERATING DATA 03 FB ACTUAL SIGNALS 04 FAULT HISTORY 10 START/STOP/DIR 11 REFERENCE SELECT EXIT | 00:00 | SEL LOC ↻HELP—— This group defines external sources (EXT1 and EXT2) for commands that enable start, stop and EXIT | 00:00 |
2.	If the whole text is not visible, scroll the lines with keys ▲ and ▼.	LOC ↻HELP—— external sources (EXT1 and EXT2) for commands that enable start, stop and direction changes. EXIT | 00:00 |
3.	After reading the text, return to the previous display by pressing EXIT.	LOC ↻PAR GROUPS——10 01 OPERATING DATA 03 FB ACTUAL SIGNALS 04 FAULT HISTORY 10 START/STOP/DIR 11 REFERENCE SELECT EXIT | 00:00 | SEL

How to find out the panel version

Step	Action	Display
1.	If the power is switched on, switch it off.	
2.	Keep key (?) pressed down while you switch on the power and read the information. The display shows the following panel information: Panel FW: panel firmware version ROM CRC: panel ROM check sum Flash Rev: flash content version Flash content comment. When you release the (?) key, the panel goes to the Output mode.	PANEL VERSION INFO Panel FW: x.xx ROM CRC: xxxxxxxxxx Flash Rev: x.xx xxxxxxxxxxxxxxxxxxxx

How to start, stop and switch between local and remote control

You can start, stop and switch between local and remote control in any mode. To be able to start or stop the drive, the drive must be in local control.

Step	Action	Display
1.	• To switch between remote control (REM shown on the status line) and local control (LOC shown on the status line), press (LOC/REM). **Note:** Switching to local control can be disabled with parameter *1606* LOCAL LOCK. The very first time the drive is powered up, it is in remote control (REM) and controlled through the drive I/O terminals. To switch to local control (LOC) and control the drive using the control panel, press (LOC/REM). The result depends on how long you press the key: • If you release the key immediately (the display flashes "Switching to the local control mode"), the drive stops. Set the local control reference as instructed on page *50*. • If you press the key for about two seconds, the drive continues as before. The drive copies the current remote values for the run/stop status and the reference, and uses them as the initial local control settings. • To stop the drive in local control, press (Stop). • To start the drive in local control, press (Start).	LOC ↻ MESSAGE Switching to the local control mode. 00:00 The arrow (↻ or ↺) on the status line stops rotating. The arrow (↻ or ↺) on the status line starts rotating. It is dotted until the drive reaches the setpoint.

Output mode

In the Output mode, you can:

- monitor actual values of up to three signals in *Group 01: OPERATING DATA*
- change the direction of the motor rotation
- set the speed, frequency or torque reference
- adjust the display contrast
- start, stop, change the direction and switch between local and remote control.

You get to the Output mode by pressing EXIT repeatedly.

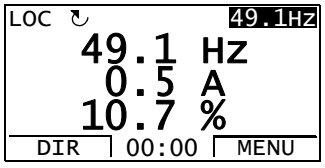

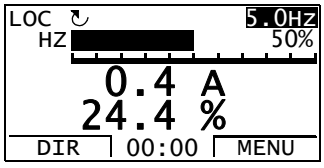

The top right corner of the display shows the reference value. The center can be configured to show up to three signal values or bar graphs. If just one or two signals are selected for display, the number and name of each displayed signal are shown in addition to the value or bar graph. See page *52* for instructions on selecting and modifying the monitored signals.

How to change the direction of the motor rotation

Step	Action	Display
1.	If you are not in the Output mode, press EXIT repeatedly until you get there.	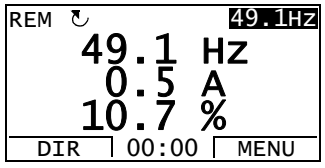
2.	If the drive is in remote control (REM shown on the status line), switch to local control by pressing LOC/REM. The display briefly shows a message about changing the mode and then returns to the Output mode.	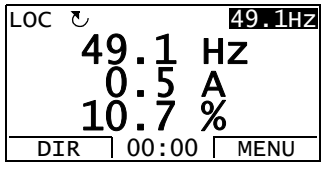
3.	To change the direction from forward (↻ shown on the status line) to reverse (↺ shown on the status line), or vice versa, press DIR. **Note**: Parameter *1003* DIRECTION must be set to 3 (REQUEST).	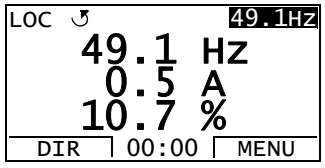

How to set the speed, frequency or torque reference

Step	Action	Display
1.	If you are not in the Output mode, press EXIT repeatedly until you get there.	REM ↻ 49.1Hz 49.1 Hz 0.5 A 10.7 % DIR | 00:00 | MENU
2.	If the drive is in remote control (REM shown on the status line), switch to local control by pressing LOC/REM. The display briefly shows a message about changing the mode and then returns to the Output mode. **Note**: With *Group 11: REFERENCE SELECT*, you can allow the reference modification in remote control.	LOC ↻ 49.1Hz 49.1 Hz 0.5 A 10.7 % DIR | 00:00 | MENU
3.	• To increase the highlighted reference value shown in the top right corner of the display, press ▲. The value changes immediately. It is stored in the drive permanent memory and restored automatically after power switch-off. • To decrease the value, press ▼.	LOC ↻ 50.0Hz 50.0 Hz 0.5 A 10.7 % DIR | 00:00 | MENU

How to adjust the display contrast

Step	Action	Display
1.	If you are not in the Output mode, press EXIT repeatedly until you get there.	LOC ↻ 49.1Hz 49.1 Hz 0.5 A 10.7 % DIR | 00:00 | MENU
2.	• To increase the contrast, press keys MENU and ▲ simultaneously. • To decrease the contrast, press keys MENU and ▼ simultaneously.	LOC ↻ 49.1Hz 49.1 Hz 0.5 A 10.7 % DIR | 00:00 | MENU

Parameters mode

In the Parameters mode, you can:

- view and change parameter values
- start, stop, change the direction and switch between local and remote control.

How to select a parameter and change its value

Step	Action	Display
1.	Go to the Main menu by pressing MENU if you are in the Output mode, otherwise by pressing EXIT repeatedly until you get to the Main menu.	LOC ↻MAIN MENU———1 PARAMETERS ASSISTANTS CHANGED PAR EXIT | 00:00 | ENTER
2.	Go to the Parameters mode by selecting PARAMETERS on the menu with keys ▲ and ▼, and pressing ENTER.	LOC ↻PAR GROUPS——01 01 OPERATING DATA 03 FB ACTUAL SIGNALS 04 FAULT HISTORY 10 START/STOP/DIR 11 REFERENCE SELECT EXIT | 00:00 | SEL
3.	Select the appropriate parameter group with keys ▲ and ▼. Press SEL.	LOC ↻PAR GROUPS——99 99 START-UP DATA 01 OPERATING DATA 03 FB ACTUAL SIGNALS 04 FAULT HISTORY 10 START/STOP/DIR EXIT | 00:00 | SEL LOC ↻PARAMETERS——— 9901 LANGUAGE ENGLISH 9902 APPLIC MACRO 9904 MOTOR CTRL MODE 9905 MOTOR NOM VOLT EXIT | 00:00 | EDIT
4.	Select the appropriate parameter with keys ▲ and ▼. The current value of the parameter is shown below the selected parameter. Press EDIT.	LOC ↻PARAMETERS——— 9901 LANGUAGE 9902 APPLIC MACRO ABB STANDARD 9904 MOTOR CTRL MODE 9905 MOTOR NOM VOLT EXIT | 00:00 | EDIT LOC ↻PAR EDIT——— 9902 APPLIC MACRO ABB STANDARD [1] CANCEL | 00:00 | SAVE
5.	Specify a new value for the parameter with keys ▲ and ▼. Pressing the key once increments or decrements the value. Holding the key down changes the value faster. Pressing the keys simultaneously replaces the displayed value with the default value.	LOC ↻PAR EDIT——— 9902 APPLIC MACRO 3-WIRE [2] CANCEL | 00:00 | SAVE
6.	• To save the new value, press SAVE. • To cancel the new value and keep the original, press CANCEL.	LOC ↻PARAMETERS——— 9901 LANGUAGE 9902 APPLIC MACRO 3-WIRE 9904 MOTOR CTRL MODE 9905 MOTOR NOM VOLT EXIT | 00:00 | EDIT

How to select the monitored signals

Step	Action	Display
1.	You can select which signals are monitored in the Output mode and how they are displayed with *Group 34: PANEL DISPLAY* parameters. See page *51* for detailed instructions on changing parameter values. By default, the display shows three signals. The particular default signals depend on the value of parameter *9902* APPLIC MACRO: For macros whose default value of parameter *9904* MOTOR CTRL MODE is 1 (VECTOR:SPEED), the default for signal 1 is *0102* SPEED, otherwise *0103* OUTPUT FREQ. The defaults for signals 2 and 3 are always *0104* CURRENT and *0105* TORQUE, respectively. To change the default signals, select up to three signals from *Group 01: OPERATING DATA* to be shown. Signal 1: Change the value of parameter *3401* SIGNAL1 PARAM to the index of the signal parameter in *Group 01: OPERATING DATA* (= number of the parameter without the leading zero), e.g. 105 means parameter *0105* TORQUE. Value 100 means that no signal is displayed. Repeat for signals 2 (*3408* SIGNAL2 PARAM) and 3 (*3415* SIGNAL3 PARAM).	LOC ↻PAR EDIT 3401 SIGNAL1 PARAM OUTPUT FREQ [103] CANCEL 00:00 SAVE LOC ↻PAR EDIT 3408 SIGNAL2 PARAM CURRENT [104] CANCEL 00:00 SAVE LOC ↻PAR EDIT 3415 SIGNAL3 PARAM TORQUE [105] CANCEL 00:00 SAVE
2.	Select how you want the signals to be displayed: as a decimal number or a bar graph. For decimal numbers, you can specify the decimal point location, or use the decimal point location and unit of the source signal [setting (9 (DIRECT)]. For details, see parameter *3404*. Signal 1: parameter *3404* OUTPUT1 DSP FORM Signal 2: parameter *3411* OUTPUT2 DSP FORM Signal 3: parameter *3418* OUTPUT3 DSP FORM.	LOC ↻PAR EDIT 3404 OUTPUT1 DSP FORM DIRECT [9] CANCEL 00:00 SAVE
3.	Select the units to be displayed for the signals. This has no effect if parameter *3404*/*3411*/*3418* is set to 9 (DIRECT). For details, see parameter *3405*. Signal 1: parameter *3405* OUTPUT1 UNIT Signal 2: parameter *3412* OUTPUT2 UNIT Signal 3: parameter *3419* OUTPUT3 UNIT.	LOC ↻PAR EDIT 3405 OUTPUT1 UNIT Hz [3] CANCEL 00:00 SAVE
4.	Select the scalings for the signals by specifying the minimum and maximum display values. This has no effect if parameter *3404*/*3411*/*3418* is set to 9 (DIRECT). For details, see parameters *3406* and *3407*. Signal 1: parameters *3406* OUTPUT1 MIN and *3407* OUTPUT1 MAX Signal 2: parameters *3413* OUTPUT2 MIN and *3414* OUTPUT2 MAX Signal 3: parameters *3420* OUTPUT3 MIN and *3421* OUTPUT3 MAX.	LOC ↻PAR EDIT 3406 OUTPUT1 MIN 0.0 Hz CANCEL 00:00 SAVE LOC ↻PAR EDIT 3407 OUTPUT1 MAX 500.0 Hz CANCEL 00:00 SAVE

Assistants mode

When the drive is first powered up, the Start-up Assistant guides you through the setup of the basic parameters. The Start-up Assistant is divided into assistants, each of which guides you through the task of specifying a related parameter set, for example Motor Set-up or PID Control. You can activate the assistants one after the other as the Start-up Assistant suggests, or independently. The tasks of the assistants are listed in the table on page *54*.

In the Assistants mode, you can:

- use assistants to guide you through the specification of a set of basic parameters
- start, stop, change the direction and switch between local and remote control.

How to use an assistant

The table below shows the basic operation sequence which leads you through assistants. The Motor Set-up Assistant is used as an example.

Step	Action	Display
1.	Go to the Main menu by pressing MENU if you are in the Output mode, otherwise by pressing EXIT repeatedly until you get to the Main menu.	LOC ↻MAIN MENU———1 PARAMETERS ASSISTANTS CHANGED PAR EXIT | 00:00 | ENTER
2.	Go to the Assistants mode by selecting ASSISTANTS on the menu with keys ▲ and ▼, and pressing ENTER.	LOC ↻ASSISTANTS———1 Start-up assistant Motor Set-up Application Speed control EXT1 Speed control EXT2 EXIT | 00:00 | SEL
3.	Select the assistant with keys ▲ and ▼, and press SEL. If you select any other assistant than the Start-up Assistant, it guides you through the task of specification of its parameter set as shown in steps *4.* and *5.* below. After that you can select another assistant on the Assistants menu or exit the Assistants mode. The Motor Set-up Assistant is used here as an example. If you select the Start-up Assistant, it activates the first assistant, which guides you through the task of specification of its parameter set as shown in steps *4.* and *5.* below. The Start-up Assistant then asks if you want to continue with the next assistant or skip it – select the appropriate answer with keys ▲ and ▼, and press SEL. If you choose to skip, the Start-up Assistant asks the same question about the next assistant, and so on.	LOC ↻PAR EDIT——— 9905 MOTOR NOM VOLT 220 V EXIT | 00:00 | SAVE LOC ↻CHOICE——— Do you want to continue with application setup? Continue Skip EXIT | 00:00 | OK
4.	• To specify a new value, press keys ▲ and ▼. • To ask for information on the requested parameter, press key ?. Scroll the help text with keys ▲ and ▼. Close the help by pressing EXIT.	LOC ↻PAR EDIT——— 9905 MOTOR NOM VOLT 240 V EXIT | 00:00 | SAVE LOC ↻HELP——— Set as given on the motor nameplate. Voltage value must correspond to motor D/Y connection. EXIT | 00:00 |

Step	Action	Display
5.	• To accept the new value and continue to the setting of the new parameter, press SAVE. • To stop the assistant, press EXIT.	LOC ↻PAR EDIT 9906 MOTOR NOM CURR 1.2 A EXIT 00:00 SAVE

The table below lists the tasks of the assistants and the relevant drive parameters. Depending on the selection made in the Application task (parameter *9902* APPLIC MACRO), the Start-up Assistant decides, which consequent tasks it suggests.

Name	Description	Set parameters
Language select	Selecting the language	*9901*
Motor set-up	Setting the motor data Performing the motor identification. (If the speed limits are not in the allowed range: Setting the limits.)	*9904*…*9909* *9910*
Application	Selecting the application macro	*9902*, parameters associated to the macro
Option modules	Activating the option modules	*Group 35: MOTOR TEMP MEAS* *Group 52: PANEL COMM* *9802*
Speed control EXT1	Selecting the source for the speed reference (If AI1 is used: Setting analog input AI1 limits, scale, inversion) Setting the reference limits Setting the speed (frequency) limits Setting the acceleration and deceleration times	*1103* (*1301*…*1303*, *3001*) *1104*, *1105* *2001*, *2002*, (*2007*, *2008*) *2202*, *2203*
Speed control EXT2	Selecting the source for the speed reference (If AI1 is used: Setting analog input AI1 limits, scale, inversion) Setting the reference limits	*1106* (*1301*…*1303*, *3001*) *1107*, *1108*
Torque control	Selecting the source for the torque reference (If AI1 is used: Setting analog input AI1 limits, scale, inversion) Setting the reference limits Setting the torque ramp up and ramp down times	*1106* (*1301*…*1303*, *3001*) *1107*, *1108* *2401*, *2402*
PID control	Selecting the source for the process reference (If AI1 is used: Setting analog input AI1 limits, scale, inversion) Setting the reference limits Setting the speed (reference) limits Setting the source and limits for the process actual value	*1106* (*1301*…*1303*, *3001*) *1107*, *1108* *2001*, *2002*, (*2007*, *2008*) *4016*, *4018*, *4019*
Start/Stop control	Selecting the source for start and stop signals of the two external control locations, EXT1 and EXT2 Selecting between EXT1 and EXT2 Defining the direction control Defining the start and stop modes Selecting the use of Run Enable signal	*1001*, *1002* *1102* *1003* *2101*…*2103* *1601*
Timed functions	Setting the timed functions Selecting the timed start/stop control for external control locations EXT1 and EXT2 Selecting timed EXT1/EXT2 control Activation of timed constant speed 1	*Group 36: TIMED FUNCTIONS* *1001*, *1002* *1102* *1201*

Name	Description	Set parameters
	Selecting timed function status indicated through relay output RO	1401
	Selecting timed PID1 parameter set 1/2 control	4027
Protections	Setting the current and torque limits	2003, 2017
Output signals	Selecting the signals indicated through relay output RO	Group 14: RELAY OUTPUTS
	Selecting the signals indicated through analog output AO	Group 15: ANALOG OUTPUTS
	Setting the minimum, maximum, scaling and inversion	

Changed Parameters mode

In the Changed Parameters mode, you can:

- view a list of all parameters that have been changed from the macro default values
- change these parameters
- start, stop, change the direction and switch between local and remote control.

How to view and edit changed parameters

Step	Action	Display
1.	Go to the Main menu by pressing MENU if you are in the Output mode, otherwise by pressing EXIT repeatedly until you get to the Main menu.	LOC MAIN MENU 1 PARAMETERS ASSISTANTS CHANGED PAR EXIT 00:00 ENTER
2.	Go to the Changed Parameters mode by selecting CHANGED PAR on the menu with keys ▲ and ▼, and pressing ENTER.	LOC CHANGED PAR 1202 CONST SPEED 1 10.0 Hz 1203 CONST SPEED 2 1204 CONST SPEED 3 9902 APPLIC MACRO EXIT 00:00 EDIT
3.	Select the changed parameter on the list with keys ▲ and ▼. The value of the selected parameter is shown below it. Press EDIT to modify the value.	LOC PAR EDIT 1202 CONST SPEED 1 10.0 Hz CANCEL 00:00 SAVE
4.	Specify a new value for the parameter with keys ▲ and ▼. Pressing the key once increments or decrements the value. Holding the key down changes the value faster. Pressing the keys simultaneously replaces the displayed value with the default value.	LOC PAR EDIT 1202 CONST SPEED 1 15.0 Hz CANCEL 00:00 SAVE
5.	• To accept the new value, press SAVE. If the new value is the default value, the parameter is removed from the list of changed parameters. • To cancel the new value and keep the original, press CANCEL.	LOC CHANGED PAR 1202 CONST SPEED 1 15.0 Hz 1203 CONST SPEED 2 1204 CONST SPEED 3 9902 APPLIC MACRO EXIT 00:00 EDIT

Fault Logger mode

In the Fault Logger mode, you can:

- view the drive fault history of maximum ten faults (after a power off, only the three latest faults are kept in the memory)
- see the details of the three latest faults (after a power off, the details of only the most recent fault is kept in the memory)
- read the help text for the fault
- start, stop, change the direction and switch between local and remote control.

How to view faults

Step	Action	Display
1.	Go to the Main menu by pressing MENU if you are in the Output mode, otherwise by pressing EXIT repeatedly until you get to the Main menu.	LOC ↻MAIN MENU 1 PARAMETERS ASSISTANTS CHANGED PAR EXIT | 00:00 | ENTER
2.	Go to the Fault Logger mode by selecting FAULT LOGGER on the menu with keys ▲ and ▼, and pressing ENTER. The display shows the fault log starting with the latest fault. The number on the row is the fault code according to which the causes and corrective actions are listed in chapter *Diagnostics*.	LOC ↻FAULT LOGGER 10: PANEL LOSS 19.03.05 13:04:57 6: DC UNDERVOLT 6: AI1 LOSS EXIT | 00:00 | DETAIL
3.	To see the details of a fault, select it with keys ▲ and ▼, and press DETAIL.	LOC ↻PANEL LOSS FAULT 10 FAULT TIME 1 13:04:57 FAULT TIME 2 EXIT | 00:00 | DIAG
4.	To show the help text, press DIAG. Scroll the help text with keys ▲ and ▼. After reading the help, press OK to return to the previous display.	LOC ↻DIAGNOSTICS Check: Comm lines and connections, parameter 3002, parameters in groups 10 and 11. EXIT | 00:00 | OK

Time and Date mode

In the Time and Date mode, you can:

- show or hide the clock
- change date and time display formats
- set the date and time
- enable or disable automatic clock transitions according to the daylight saving changes
- start, stop, change the direction and switch between local and remote control.

The Assistant Control Panel contains a battery to ensure the function of the clock when the panel is not powered by the drive.

How to show or hide the clock, change display formats, set the date and time and enable or disable clock transitions due to daylight saving changes

Step	Action	Display
1.	Go to the Main menu by pressing MENU if you are in the Output mode, otherwise by pressing EXIT repeatedly until you get to the Main menu.	LOC ↻MAIN MENU——1 PARAMETERS ASSISTANTS CHANGED PAR EXIT | 00:00 | ENTER
2.	Go to the Time and Date mode by selecting TIME & DATE on the menu with keys ▲ and ▼, and pressing ENTER.	LOC ↻TIME & DATE——1 CLOCK VISIBILITY TIME FORMAT DATE FORMAT SET TIME SET DATE EXIT | 00:00 | SEL
3.	• To show (hide) the clock, select CLOCK VISIBLILITY on the menu, press SEL, select Show clock (Hide clock) and press SEL, or, if you want to return to the previous display without making changes, press EXIT.	LOC ↻CLOCK VISIB——1 Show clock Hide clock EXIT | 00:00 | SEL
	• To specify the date format, select DATE FORMAT on the menu, press SEL and select a suitable format. Press OK to save or CANCEL to cancel your changes.	LOC ↻DATE FORMAT——1 dd.mm.yy mm/dd/yy dd.mm.yyyy mm/dd/yyyy CANCEL | 00:00 | OK
	• To specify the time format, select TIME FORMAT on the menu, press SEL and select a suitable format. Press OK to save or CANCEL to cancel your changes.	LOC ↻TIME FORMAT——1 24-hour 12-hour CANCEL | 00:00 | OK
	• To set the time, select SET TIME on the menu and press SEL. Specify the hours with keys ▲ and ▼, and press OK.Then specify the minutes. Press OK to save or CANCEL to cancel your changes.	LOC ↻SET TIME—— 15:41 CANCEL | 00:00 | OK

Step	Action	Display
	• To set the date, select SET DATE on the menu and press SEL. Specify the first part of the date (day or month depending on the selected date format) with keys ▲ and ▼, and press OK. Repeat for the second part. After specifying the year, press OK. To cancel your changes, press CANCEL. • To enable or disable the automatic clock transitions according to the daylight saving changes, select DAYLIGHT SAVING on the menu and press SEL. Pressing ? opens the help that shows the beginning and end dates of the period during which daylight saving time is used in each country or area whose daylight saving changes you can select to be followed. • To disable automatic clock transitions according to the daylight saving changes, select Off and press SEL. • To enable automatic clock transitions, select the country or area whose daylight saving changes are followed and press SEL. • To return to the previous display without making changes, press EXIT.	LOC ↻SET DATE 19.03.05 CANCEL 00:00 OK LOC DAYLIGHT SAV—1 Off EU US Australia1:NSW,Vict.. Australia2:Tasmania.. EXIT 00:00 SEL LOC HELP EU: On: Mar last Sunday Off: Oct last Sunday US: EXIT 00:00

Parameter Backup mode

The Parameter Backup mode is used to export parameters from one drive to another or to make a backup of the drive parameters. Uploading to the panel stores all drive parameters, including up to two user sets, to the Assistant Control Panel. The full set, partial parameter set (application) and user sets can then be downloaded from the control panel to another drive or the same drive. Uploading and downloading can be performed in local control.

The control panel memory is non-volatile and does not depend on the panel battery.

In the Parameter Backup mode, you can:

- copy all parameters from the drive to the control panel (UPLOAD TO PANEL). This includes all defined user sets of parameters and internal (not adjustable by the user) parameters such as those created by the ID Run.
- view the information about the backup stored to the control panel with UPLOAD TO PANEL (BACKUP INFO). This includes e.g. the type and rating of the drive where the backup was made. It is useful to check this information when you are going to copy the parameters to another drive with DOWNLOAD FULL SET to ensure that the drives match.
- restore the full parameter set from the control panel to the drive (DOWNLOAD FULL SET). This writes all parameters, including the internal non-user-adjustable motor parameters, to the drive. It does not include the user sets of parameters.

  Note: Only use this function to restore a drive from a backup or to transfer parameters to systems that are identical to the original system.
- copy a partial parameter set (part of the full set) from the control panel to a drive (DOWNLOAD APPLICATION). The partial set does not include user sets, internal motor parameters, parameters *9905*…*9909*, *1605*, *1607*, *5201*, nor any *Group 51: EXT COMM MODULE* and *Group 53: EFB PROTOCOL* parameters.

  The source and target drives and their motor sizes do not need to be the same.
- copy USER S1 parameters from the control panel to the drive (DOWNLOAD USER SET1). A user set includes *Group 99: START-UP DATA* parameters and the internal motor parameters.

  The function is only shown on the menu when User Set 1 has been first saved using parameter *9902* APPLIC MACRO (see section *User parameter sets* on page *83*) and then uploaded to the control panel with UPLOAD TO PANEL.
- copy USER S2 parameters from the control panel to the drive (DOWNLOAD USER SET2). As DOWNLOAD USER SET1 above.
- start, stop, change the direction and switch between local and remote control.

How to upload and download parameters

For the upload and download functions available, see above. Note that the drive has to be in local control for uploading and downloading.

Step	Action	Display
1.	Go to the Main menu by pressing MENU if you are in the Output mode, otherwise by pressing EXIT repeatedly until you get to the Main menu. – If REM is shown on the status line, press LOC/REM to switch to local control.	LOC ↻MAIN MENU———1 PARAMETERS ASSISTANTS CHANGED PAR EXIT | 00:00 | ENTER
2.	Go to the Par Backup mode by selecting PAR BACKUP on the menu with keys ▲ and ▼, and pressing ENTER.	LOC ↻PAR BACKUP———1 UPLOAD TO PANEL BACKUP INFO DOWNLOAD FULL SET DOWNLOAD APPLICATION DOWNLOAD USER SET1 EXIT | 00:00 | SEL
3.	• To copy all parameters (including user sets and internal parameters) from the drive to the control panel, select UPLOAD TO PANEL on the Par Backup menu with keys ▲ and ▼, and press SEL. During the transfer, the display shows the transfer status as a percentage of completion. Press ABORT if you want to stop the operation. After the upload is completed, the display shows a message about the completion. Press OK to return to the Par Backup menu. • To perform downloads, select the appropriate operation (here DOWNLOAD FULL SET is used as an example) on the Par Backup menu with keys ▲ and ▼, and press SEL. The display shows the transfer status as a percentage of completion. Press ABORT if you want stop the operation. After the download is completed, the display shows a message about the completion. Press OK to return to the Par Backup menu.	LOC ↻PAR BACKUP——— Copying parameters 50% ABORT | 00:00 | LOC ↻MESSAGE——— Parameter upload successful. OK | 00:00 | LOC ↻PAR BACKUP——— Downloading parameters (full set) 50% ABORT | 00:00 | LOC ↻MESSAGE——— Parameter download successfully completed. OK | 00:00 |

How to view information about the backup

Step	Action	Display
1.	Go to the Main menu by pressing MENU if you are in the Output mode, otherwise by pressing EXIT repeatedly until you get to the Main menu.	LOC ↻MAIN MENU———1 PARAMETERS ASSISTANTS CHANGED PAR EXIT | 00:00 | ENTER
2.	Go to the Par Backup mode by selecting PAR BACKUP on the menu with keys ▲ and ▼, and pressing ENTER.	LOC ↻PAR BACKUP———1 UPLOAD TO PANEL BACKUP INFO DOWNLOAD FULL SET DOWNLOAD APPLICATION DOWNLOAD USER SET1 EXIT | 00:00 | SEL
3.	Select BACKUP INFO on the Par Backup menu with keys ▲ and ▼, and press SEL. The display shows the following information about the drive where the backup was made: DRIVE TYPE: type of the drive DRIVE RATING: rating of the drive in format XXXYZ, where XXX: nominal current rating. If present, an "A" indicates a decimal point, e.g. 4A6 means 4.6 A. Y: 2 = 200 V 4 = 400 V 6 = 600 V Z: i = European loading package n = US loading package FIRMWARE: firmware version of the drive. You can scroll the information with keys ▲ and ▼.	LOC ↻BACKUP INFO——— DRIVE TYPE ACS550 3304 DRIVE RATING 4A62i 3301 FIRMWARE EXIT | 00:00 | LOC ↻BACKUP INFO——— ACS550 3304 DRIVE RATING 4A62i 3301 FIRMWARE 300F hex EXIT | 00:00 |
4.	Press EXIT to return to the Par Backup menu.	LOC ↻PAR BACKUP———1 UPLOAD TO PANEL BACKUP INFO DOWNLOAD FULL SET DOWNLOAD APPLICATION DOWNLOAD USER SET1 EXIT | 00:00 | SEL

I/O Settings mode

In the I/O Settings mode, you can:

- check the parameter settings related to any I/O terminal
- edit the parameter setting. For example, if "1103: REF1" is listed under Ain1 (Analog input 1), that is, parameter *1103* REF1 SELECT has value AI1, you can change its value to e.g. AI2. You cannot, however, set the value of parameter *1106* REF2 SELECT to AI1.
- start, stop, change the direction and switch between local and remote control.

How to edit and change parameter settings related to I/O terminals

Step	Action	Display
1.	Go to the Main menu by pressing MENU if you are in the Output mode, otherwise by pressing EXIT repeatedly until you get to the Main menu.	LOC ↻MAIN MENU———1 PARAMETERS ASSISTANTS CHANGED PAR EXIT | 00:00 | ENTER
2.	Go the I/O Settings mode by selecting I/O SETTINGS on the menu with keys ▲ and ▼, and pressing ENTER.	LOC ↻I/O SETTINGS——1 DIGITAL INPUTS (DI) ANALOG INPUTS (AI) RELAY OUTPUTS (ROUT) ANALOG OUTPUTS (AOUT) PANEL EXIT | 00:00 | SEL
3.	Select the I/O group, e.g. DIGITAL INPUTS, with keys ▲ and ▼, and press SEL. After a brief pause, the display shows the current settings for the selection.	LOC ↻I/O SETTINGS—— –DI1– 1001:START/STOP (E1) –DI2– —— –DI3– EXIT | 00:00 |
4.	Select the setting (line with a parameter number) with keys ▲ and ▼, and press EDIT.	LOC ↻PAR EDIT——— 1001 EXT1 COMMANDS DI1 [1] CANCEL | 00:00 | SAVE
5.	Specify a new value for the setting with keys ▲ and ▼. Pressing the key once increments or decrements the value. Holding the key down changes the value faster. Pressing the keys simultaneously replaces the displayed value with the default value.	LOC ↻PAR EDIT——— 1001 EXT1 COMMANDS DI1,2 [2] CANCEL | 00:00 | SAVE
6.	• To save the new value, press SAVE. • To cancel the new value and keep the original, press CANCEL.	LOC ↻I/O SETTINGS—— –DI1– 1001:START/STOP (E1) –DI2– 1001:DIR (E1) –DI3– EXIT | 00:00 |

Basic Control Panel

Features

The Basic Control Panel features:

- numeric control panel with an LCD display
- copy function – parameters can be copied to the control panel memory for later transfer to other drives or for backup of a particular system.

Overview

The following table summarizes the key functions and displays on the Basic Control Panel.

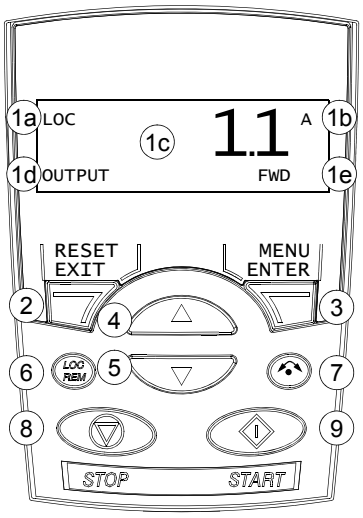

No.	Use
1	LCD display – Divided into five areas: a. Upper left – Control location: LOC: drive control is local, that is, from the control panel REM: drive control is remote, such as the drive I/O or fieldbus. b. Upper right – Unit of the displayed value. c. Center – Variable; in general, shows parameter and signal values, menus or lists. Shows also fault and alarm codes. d. Lower left and center – Panel operation state: OUTPUT: Output mode PAR: Parameter mode MENU: Main menu FAULT: Fault mode. e. Lower right – Indicators: FWD (forward) / REV (reverse): direction of the motor rotation Flashing slowly: stopped Flashing rapidly: running, not at setpoint Steady: running, at setpoint SET: Displayed value can be modified (in the Parameter and Reference modes).
2	RESET/EXIT – Exits to the next higher menu level without saving changed values. Resets faults in the Output and Fault modes.
3	MENU/ENTER – Enters deeper into menu level. In the Parameter mode, saves the displayed value as the new setting.
4	Up – • Scrolls up through a menu or list. • Increases a value if a parameter is selected. • Increases the reference value in the Reference mode. Holding the key down changes the value faster.
5	Down – • Scrolls down through a menu or list. • Decreases a value if a parameter is selected. • Decreases the reference value in the Reference mode. Holding the key down changes the value faster.
6	LOC/REM – Changes between local and remote control of the drive.
7	DIR – Changes the direction of the motor rotation.
8	STOP – Stops the drive in local control.
9	START – Starts the drive in local control.

Operation

You operate the control panel with menus and keys. You select an option, e.g. operation mode or parameter, by scrolling the ▲ and ▼ arrow keys until the option is visible in the display and then pressing the key.

With the key, you return to the previous operation level without saving the made changes.

The Basic Control Panel has five panel modes: Output, Reference, Parameter, Copy and Fault. The operation in the first four modes is described in this chapter. When a fault or alarm occurs, the panel goes automatically to the Fault mode showing the fault or alarm code. You can reset the fault or alarm in the Output or Fault mode (see chapter *Diagnostics*).

After the power is switched on, the panel is in the Output mode, where you can start, stop, change the direction, switch between local and remote control and monitor up to three actual values (one at a time). To do other tasks, go first to the Main menu and select the appropriate mode.

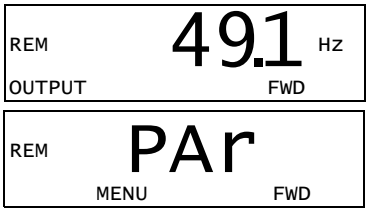

How to do common tasks

The table below lists common tasks, the mode in which you can perform them and the page number where the steps to do the task are described in detail.

Task	Mode	Page
How to switch between local and remote control	Any	66
How to start and stop the drive	Any	66
How to change the direction of the motor rotation	Any	66
How to browse the monitored signals	Output	67
How to set the speed, frequency or torque reference	Reference	68
How to change the value of a parameter	Parameter	69
How to select the monitored signals	Parameter	70
How to reset faults and alarms	Output, Fault	259
How to copy parameters from the drive to the control panel	Copy	72
How to restore parameters from the control panel to the drive	Copy	72

How to start, stop and switch between local and remote control

You can start, stop and switch between local and remote control in any mode. To be able to start or stop the drive, the drive must be in local control.

Step	Action	Display
1.	• To switch between remote control (REM shown on the left) and local control (LOC shown on the left), press (LOC/REM). **Note:** Switching to local control can be disabled with parameter *1606* LOCAL LOCK. After pressing the key, the display briefly shows message "LoC" or "rE", as appropriate, before returning to the previous display. The very first time the drive is powered up, it is in remote control (REM) and controlled through the drive I/O terminals. To switch to local control (LOC) and control the drive using the control panel, press (LOC/REM). The result depends on how long you press the key: • If you release the key immediately (the display flashes "LoC"), the drive stops. Set the local control reference as instructed on page *68*. • If you press the key for about two seconds (release when the display changes from "LoC" to "LoC r"), the drive continues as before. The drive copies the current remote values for the run/stop status and the reference, and uses them as the initial local control settings. • To stop the drive in local control, press (Stop). • To start the drive in local control, press (Start).	LOC 49.1 Hz OUTPUT FWD LOC LoC FWD Text FWD or REV on the bottom line starts flashing slowly. Text FWD or REV on the bottom line starts flashing rapidly. It stops flashing when the drive reaches the setpoint.

How to change the direction of the motor rotation

You can change the direction of the motor rotation in any mode.

Step	Action	Display
1.	If the drive is in remote control (REM shown on the left), switch to local control by pressing (LOC/REM). The display briefly shows message "LoC" before returning to the previous display.	LOC 49.1 Hz OUTPUT FWD
2.	To change the direction from forward (FWD shown at the bottom) to reverse (REV shown at the bottom), or vice versa, press (Dir). **Note**: Parameter *1003* DIRECTION must be set to 3 (REQUEST).	LOC 49.1 Hz OUTPUT REV

Output mode

In the Output mode, you can:

- monitor actual values of up to three *Group 01: OPERATING DATA* signals, one signal at a time
- start, stop, change the direction and switch between local and remote control.

You get to the Output mode by pressing 7 until the display shows text OUTPUT at the bottom.

The display shows the value of one *Group 01: OPERATING DATA* signal. The unit is shown on the right. Page *70* tells how to select up to three signals to be monitored in the Output mode. The table below shows how to view them one at a time.

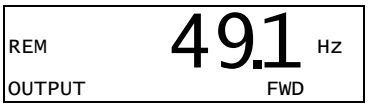

How to browse the monitored signals

Step	Action	Display
1.	If more than one signals have been selected to be monitored (see page *70*), you can browse them in the Output mode. To browse the signals forward, press key ▲ repeatedly. To browse them backward, press key ▼ repeatedly.	REM 49.1 Hz OUTPUT FWD REM 0.5 A OUTPUT FWD REM 10.7 % OUTPUT FWD

Reference mode

In the Reference mode, you can:

- set the speed, frequency or torque reference
- start, stop, change the direction and switch between local and remote control.

How to set the speed, frequency or torque reference

Step	Action	Display
1.	Go to the Main menu by pressing if you are in the Output mode, otherwise by pressing repeatedly until you see MENU at the bottom.	REM PAr MENU FWD
2.	If the drive is in remote control (REM shown on the left), switch to local control by pressing LOC/REM. The display briefly shows "LoC" before switching to local control. **Note**: With *Group 11: REFERENCE SELECT*, you can allow the reference modification in remote control (REM).	LOC PAr MENU FWD
3.	If the panel is not in the Reference mode ("rEF" not visible), press key ▲ or ▼ until you see "rEF" and then press . Now the display shows the current reference value with SET under the value.	LOC rEF MENU FWD LOC 49.1 Hz SET FWD
4.	• To increase the reference value, press ▲. • To decrease the reference value, press ▼. The value changes immediately when you press the key. It is stored in the drive permanent memory and restored automatically after power switch-off.	LOC 50.0 Hz SET FWD

Parameter mode

In the Parameter mode, you can:

- view and change parameter values
- select and modify the signals shown in the Output mode
- start, stop, change the direction and switch between local and remote control.

How to select a parameter and change its value

Step	Action	Display
1.	Go to the Main menu by pressing if you are in the Output mode, otherwise by pressing repeatedly until you see MENU at the bottom.	LOC rEF MENU FWD
2.	If the panel is not in the Parameter mode ("PAr" not visible), press key or until you see "PAr" and then press . The display shows the number of one of the parameter groups.	LOC PAr MENU FWD LOC -01- PAR FWD
3.	Use keys and to find the desired parameter group.	LOC -11- PAR FWD
4.	Press . The display shows one of the parameters in the selected group.	LOC 1101 PAR FWD
5.	Use keys and to find the desired parameter.	LOC 1103 PAR FWD
6.	Press and hold for about two seconds until the display shows the value of the parameter with SET underneath indicating that changing of the value is now possible. **Note:** When SET is visible, pressing keys and simultaneously changes the displayed value to the default value of the parameter.	LOC 1 PAR SET FWD
7.	Use keys and to select the parameter value. When you have changed the parameter value, SET starts flashing. • To save the displayed parameter value, press . • To cancel the new value and keep the original, press .	LOC 2 PAR SET FWD LOC 1103 PAR FWD

How to select the monitored signals

Step	Action	Display
1.	You can select which signals are monitored in the Output mode and how they are displayed with *Group 34: PANEL DISPLAY* parameters. See page *51* for detailed instructions on changing parameter values. By default, you can monitor three signals by browsing (see page *67*). The particular default signals depend on the value of parameter *9902* APPLIC MACRO: For macros whose default value of parameter *9904* MOTOR CTRL MODE is 1 (VECTOR:SPEED), the default for signal 1 is *0102* SPEED, otherwise *0103* OUTPUT FREQ. The defaults for signals 2 and 3 are always *0104* CURRENT and *0105* TORQUE, respectively. To change the default signals, select from *Group 01: OPERATING DATA* up to three signals to be browsed. Signal 1: Change the value of parameter *3401* SIGNAL1 PARAM to the index of the signal parameter in *Group 01: OPERATING DATA* (= number of the parameter without the leading zero), e.g. 105 means parameter *0105* TORQUE. Value 100 means that no signal is displayed. Repeat for signals 2 (*3408* SIGNAL2 PARAM) and 3 (*3415* SIGNAL3 PARAM). For example, if *3401* = 0 and *3415* = 0, browsing is disabled and only the signal specified by *3408* appears in the display. If all three parameters are set to 0, i.e. no signals are selected for monitoring, the panel displays text "n.A".	LOC 103 PAR SET FWD LOC 104 PAR SET FWD LOC 105 PAR SET FWD
2.	Specify the decimal point location, or use the decimal point location and unit of the source signal [setting (9 (DIRECT)]. Bar graphs are not available for Basic Operation Panel. For details, see parameter *3404*. Signal 1: parameter *3404* OUTPUT1 DSP FORM Signal 2: parameter *3411* OUTPUT2 DSP FORM Signal 3: parameter *3418* OUTPUT3 DSP FORM.	LOC 9 PAR SET FWD
3.	Select the units to be displayed for the signals. This has no effect if parameter *3404*/*3411*/*3418* is set to 9 (DIRECT). For details, see parameter *3405*. Signal 1: parameter *3405* OUTPUT1 UNIT Signal 2: parameter *3412* OUTPUT2 UNIT Signal 3: parameter *3419* OUTPUT3 UNIT.	LOC 3 PAR SET FWD
4.	Select the scalings for the signals by specifying the minimum and maximum display values. This has no effect if parameter *3404*/*3411*/*3418* is set to 9 (DIRECT). For details, see parameters *3406* and *3407*. Signal 1: parameters *3406* OUTPUT1 MIN and *3407* OUTPUT1 MAX Signal 2: parameters *3413* OUTPUT2 MIN and *3414* OUTPUT2 MAX Signal 3: parameters *3420* OUTPUT3 MIN and *3421* OUTPUT3 MAX.	LOC 0.0 Hz PAR SET FWD LOC 500.0 Hz PAR SET FWD

Copy mode

The Basic Control Panel can store a full set of drive parameters and up to two user sets of drive parameters to the control panel. The control panel memory is non-volatile.

In the Copy mode, you can:

- copy all parameters from the drive to the control panel (uL – Upload). This includes all defined user sets of parameters and internal (not adjustable by the user) parameters such as those created by the ID Run.
- restore the full parameter set from the control panel to the drive (dL A – Download All). This writes all parameters, including the internal non-user-adjustable motor parameters, to the drive. It does not include the user sets of parameters.

  Note: Only use this function to restore a drive, or to transfer parameters to systems that are identical to the original system.
- copy a partial parameter set from the control panel to a drive (dL P – Download Partial). The partial set does not include user sets, internal motor parameters, parameters *9905*…*9909*, *1605*, *1607*, *5201*, nor any *Group 51: EXT COMM MODULE* and *Group 53: EFB PROTOCOL* parameters.

  The source and target drives and their motor sizes do not need to be the same.
- copy USER S1 parameters from the control panel to the drive (dL u1 – Download User Set 1). A user set includes *Group 99: START-UP DATA* parameters and the internal motor parameters.

  The function is only shown on the menu when User Set 1 has been first saved using parameter *9902* APPLIC MACRO (see section *User parameter sets* on page *83*) and then uploaded to panel.
- copy USER S2 parameters from the control panel to the drive (dL u2 – Download User Set 2). As dL u1 – Download User Set 1 above.
- start, stop, change the direction and switch between local and remote control.

How to upload and download parameters

For the upload and download functions available, see above.

Step	Action	Display
1.	Go to the Main menu by pressing if you are in the Output mode, otherwise by pressing repeatedly until you see MENU at the bottom.	LOC PAr MENU FWD
2.	If the panel is not in the Copy mode ("CoPY" not visible), press key or until you see "CoPY". Press .	LOC CoPY MENU FWD LOC dL u1 MENU FWD
3.	• To upload all parameters (including user sets) from the drive to the control panel, step to "uL" with keys and . Press . During the transfer, the display shows the transfer status as a percentage of completion. • To perform downloads, step to the appropriate operation (here "dL A", Download All, is used as an example) with keys and . Press . During the transfer, the display shows the transfer status as a percentage of completion.	LOC uL MENU FWD LOC uL 50 % FWD LOC dL A MENU FWD LOC dL 50 % FWD

Basic Control Panel alarm codes

In addition to the faults and alarms generated by the drive (see chapter *Diagnostics*), the Basic Control Panel indicates control panel alarms with a code of form A5xxx. See section *Alarm codes (Basic Control Panel)* on page *263* for a list of the alarm codes and descriptions.

Application macros

Macros change a group of parameters to new, predefined values. Use macros to minimize the need for manual editing of parameters. Selecting a macro sets all other parameters to their default values, except:

- *Group 99: START-UP DATA* parameters (except parameter *9904*)
- *1602* PARAMETER LOCK
- *1607* PARAM SAVE
- *3018* COMM FAULT FUNC and *3019* COMM FAULT TIME
- *9802* COMM PROT SEL
- *Group 50: ENCODER* … *Group 53: EFB PROTOCOL* parameters
- *Group 29: MAINTENANCE TRIG* parameters.

After selecting a macro, you can make additional parameter changes manually with the control panel.

You enable application macros by setting the value for parameter *9902* APPLIC MACRO. By default, 1, ABB STANDARD, is the enabled macro.

The following sections describe each of the application macros and provide a connection example for each macro.

The last section in this chapter, *Macro default values for parameters*, lists the parameters that the macros change and the default values established by each macro.

ABB Standard macro

This is the default macro. It provides a general purpose, 2-wire I/O configuration, with three (3) constant speeds. Parameter values are the default values defined in section *Complete parameter list* on page *87*.

Connection example:

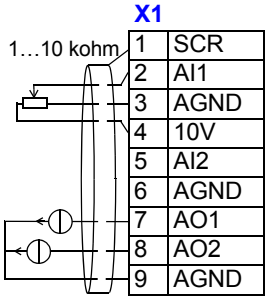

1	SCR	Signal cable shield (screen)
2	AI1	**External frequency reference 1:** 0…10 V[1]
3	AGND	Analog input circuit common
4	10V	Reference voltage 10 V DC
5	AI2	Not used
6	AGND	Analog input circuit common
7	AO1	**Output frequency:** 0…20 mA
8	AO2	**Output current:** 0…20 mA
9	AGND	Analog output circuit common
10	24V	Auxiliary voltage output +24 V DC
11	GND	Auxiliary voltage output common
12	DCOM	Digital input common for all
13	DI1	**Start/Stop:** Activate to start
14	DI2	**Fwd/Rev:** Activate to reverse rotation direction
15	DI3	**Constant speed selection**[2]
16	DI4	**Constant speed selection**[2]
17	DI5	**Ramp pair selection:** Activate to select 2nd acc/dec ramp pair
18	DI6	Not used
19	RO1C	Relay output 1, programmable Default operation: **Ready** =>19 connected to 21
20	RO1A	
21	RO1B	
22	RO2C	Relay output 2, programmable Default operation: **Running** =>22 connected to 24
23	RO2A	
24	RO2B	
25	RO3C	Relay output 3, programmable Default operation: **Fault (-1)** =>25 connected to 27 (Fault => 25 connected to 26)
26	RO3A	
27	RO3B	

Note 1. The external reference is used as a speed reference if a vector mode is selected.

Note 2. Code:
0 = open, 1 = connected

DI3	DI4	Output
0	0	Reference through AI1
1	0	CONST SPEED 1 (1202)
0	1	CONST SPEED 2 (1203)
1	1	CONST SPEED 3 (1204)

Input signals

- Analog reference (AI1)
- Start, stop and direction (DI1,2)
- Constant speed selection (DI3,4)
- Ramp pair (1 of 2) selection (DI5)

Output signals

- Analog output AO1: Frequency
- Analog output AO2: Current
- Relay output 1: Ready
- Relay output 2: Running
- Relay output 3: Fault (-1)

Jumper setting

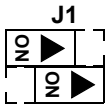

AI1: 0…10 V
AI2: 0(4)…20 mA

or

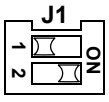

AI1: 0…10 V
AI2: 0(4)…20 mA

3-wire macro

This macro is used when the drive is controlled using momentary push-buttons. It provides three (3) constant speeds. To enable, set the value of parameter 9902 to 2 (3-WIRE).

Note: When the stop input (DI2) is deactivated (no input), the control panel start/stop buttons are disabled.

Connection example:

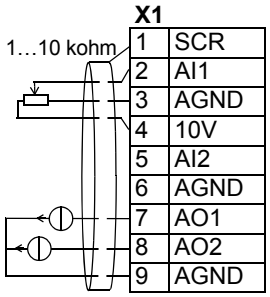

1	SCR	Signal cable shield (screen)
2	AI1	**External speed reference 1:** 0…10 V
3	AGND	Analog input circuit common
4	10V	Reference voltage 10 V DC
5	AI2	Not used
6	AGND	Analog input circuit common
7	AO1	**Motor output speed:** 0…20 mA
8	AO2	**Output current:** 0…20 mA
9	AGND	Analog output circuit common

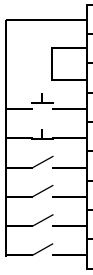

10	24V	Auxiliary voltage output +24 V DC
11	GND	Auxiliary voltage output common
12	DCOM	Digital input common for all
13	DI1	**Start:** Momentary activation with DI2 activated starts the drive
14	DI2	**Stop:** Momentary deactivation stops the drive
15	DI3	**Fwd/Rev:** Activation reverses rotation direction
16	DI4	**Constant speed selection**[1]
17	DI5	**Constant speed selection**[1]
18	DI6	Not used

19	RO1C	Relay output 1, programmable Default operation: **Ready** =>19 connected to 21
20	RO1A	
21	RO1B	
22	RO2C	Relay output 2, programmable Default operation: **Running** =>22 connected to 24
23	RO2A	
24	RO2B	
25	RO3C	Relay output 3, programmable Default operation: **Fault (-1)** =>25 connected to 27 (Fault => 25 connected to 26)
26	RO3A	
27	RO3B	

Note 1. Code:
0 = open, 1 = connected

DI4	DI5	Output
0	0	Reference through AI1
1	0	CONST SPEED 1 (1202)
0	1	CONST SPEED 2 (1203)
1	1	CONST SPEED 3 (1204)

Input signals

- Analog reference (AI1)
- Start, stop and direction (DI1,2,3)
- Constant speed selection (DI4,5)

Output signals

- Analog output AO1: Speed
- Analog output AO2: Current
- Relay output 1: Ready
- Relay output 2: Running
- Relay output 3: Fault (-1)

Jumper setting

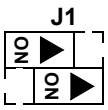

AI1: 0…10 V
AI2: 0(4)…20 mA

or

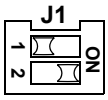

AI1: 0…10 V
AI2: 0(4)…20 mA

Alternate macro

This macro provides an I/O configuration adopted to a sequence of DI control signals used when alternating the rotation direction of the motor. To enable, set the value of parameter 9902 to 3 (ALTERNATE).

Connection example:

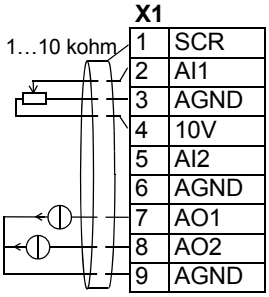

1	SCR	Signal cable shield (screen)
2	AI1	**External speed reference 1:** 0…10 V
3	AGND	Analog input circuit common
4	10V	Reference voltage 10 V DC
5	AI2	Not used
6	AGND	Analog input circuit common
7	AO1	**Motor output speed:** 0…20 mA
8	AO2	**Output current:** 0…20 mA
9	AGND	Analog output circuit common
10	24V	Auxiliary voltage output +24 V DC
11	GND	Auxiliary voltage output common
12	DCOM	Digital input common for all
13	DI1	**Start fwd:** If DI1 state is the same as DI2, the drive **stops**
14	DI2	**Start reverse**
15	DI3	**Constant speed selection**[1]
16	DI4	**Constant speed selection**[1]
17	DI5	**Ramp pair selection:** Activation selects 2nd acc/dec ramp pair
18	DI6	**Run enable:** Deactivation always stops the drive
19	RO1C	Relay output 1, programmable Default operation: **Ready** =>19 connected to 21
20	RO1A	
21	RO1B	
22	RO2C	Relay output 2, programmable Default operation: **Running** =>22 connected to 24
23	RO2A	
24	RO2B	
25	RO3C	Relay output 3, programmable Default operation: **Fault (-1)** =>25 connected to 27 (Fault => 25 connected to 26)
26	RO3A	
27	RO3B	

Note 1. Code:
0 = open, 1 = connected

DI3	DI4	Output
0	0	Reference through AI1
1	0	CONST SPEED 1 (1202)
0	1	CONST SPEED 2 (1203)
1	1	CONST SPEED 3 (1204)

Input signals

- Analog reference (AI1)
- Start, stop and direction (DI1,2)
- Constant speed selection (DI3,4)
- Ramp pair 1/2 selection (DI5)
- Run enable (DI6)

Output signals

- Analog output AO1: Speed
- Analog output AO2: Current
- Relay output 1: Ready
- Relay output 2: Running
- Relay output 3: Fault (-1)

Jumper setting

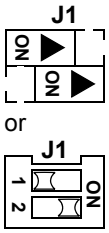

AI1: 0…10 V
AI2: 0(4)…20 mA

or

AI1: 0…10 V
AI2: 0(4)…20 mA

Motor Potentiometer macro

This macro provides a cost-effective interface for PLCs that vary the speed of the motor using only digital signals. To enable, set the value of parameter 9902 to 4 (MOTOR POT).

Connection example:

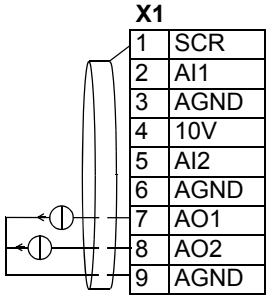

X1

1	SCR	Signal cable shield (screen)
2	AI1	Not used
3	AGND	Analog input circuit common
4	10V	Reference voltage 10 V DC
5	AI2	Not used
6	AGND	Analog input circuit common
7	AO1	**Motor output speed:** 0…20 mA
8	AO2	**Output current:** 0…20 mA
9	AGND	Analog output circuit common

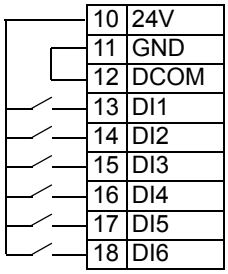

10	24V	Auxiliary voltage output +24 V DC
11	GND	Auxiliary voltage output common
12	DCOM	Digital input common for all
13	DI1	**Start/stop:** Activation starts the drive.
14	DI2	**Forward/reverse:** Activation reverses rotation direction.
15	DI3	**Reference up:** Activation increases the reference[1]
16	DI4	**Reference down:** Activation decreases the reference[1]
17	DI5	**Constant speed 1:** 1202
18	DI6	**Run enable:** Deactivation always stops the drive.

19	RO1C	Relay output 1, programmable Default operation: **Ready** =>19 connected to 21
20	RO1A	
21	RO1B	
22	RO2C	Relay output 2, programmable Default operation: **Running** =>22 connected to 24
23	RO2A	
24	RO2B	
25	RO3C	Relay output 3, programmable Default operation: **Fault (-1)** =>25 connected to 27 (Fault => 25 connected to 26)
26	RO3A	
27	RO3B	

Note 1. For DI3 and DI4:

- If both are active or inactive the speed reference is unchanged.
- The existing speed reference is stored during stop or power down.

Note 2.

- Settings of the ramp times with acceleration and deceleration time 2 (parameters 2205 and 2206).

Input signals

- Start, stop and direction (DI1,2)
- Reference up/down (DI3,4)
- Constant speed selection (DI5)
- Run enable (DI6)

Output signals

- Analog output AO1: Speed
- Analog output AO2: Current
- Relay output 1: Ready
- Relay output 2: Running
- Relay output 3: Fault (-1)

Jumper setting

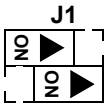

AI1: 0…10 V
AI2: 0(4)…20 mA

or

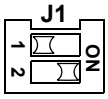

AI1: 0…10 V
AI2: 0(4)…20 mA

Hand-Auto macro

This macro provides an I/O configuration that is typically used in HVAC applications. To enable, set the value of parameter 9902 to 5 (HAND/AUTO).

Note: Parameter 2108 START INHIBIT must remain in the default setting, 0 (OFF).

Connection example:

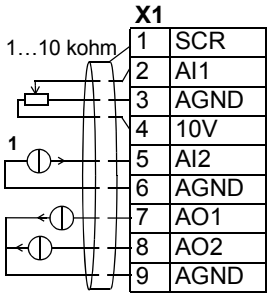

1	SCR	Signal cable shield (screen)
2	AI1	**External reference 1:** 0…10 V **(Hand Control)**
3	AGND	Analog input circuit common
4	10V	Reference voltage 10 V DC
5	AI2	**External reference 2:** 0…20 mA **(Auto Control)**
6	AGND	Analog input circuit common
7	AO1	**Motor output speed:** 0…20 mA
8	AO2	**Output current:** 0…20 mA
9	AGND	Analog output circuit common
10	24V	Auxiliary voltage output +24 V DC
11	GND	Auxiliary voltage output common
12	DCOM	Digital input common for all
13	DI1	**Start/Stop (Hand):** Activation starts the drive
14	DI2	**Forward/Reverse (Hand):** Activation reverses rotation direction
15	DI3	**EXT1/EXT2 Selection:** Activation selects auto control
16	DI4	**Run enable:** Deactivation always stops the drive
17	DI5	**Forward/Reverse (Auto):** Activation reverses rotation direction
18	DI6	**Start/Stop (Auto):** Activation starts the drive
19	RO1C	Relay output 1, programmable Default operation: **Ready** =>19 connected to 21
20	RO1A	
21	RO1B	
22	RO2C	Relay output 2, programmable Default operation: **Running** =>22 connected to 24
23	RO2A	
24	RO2B	
25	RO3C	Relay output 3, programmable Default operation: **Fault (-1)** =>25 connected to 27 (Fault => 25 connected to 26)
26	RO3A	
27	RO3B	

Note 1.
The sensor for AI2 is powered externally. See the manufacturer's instructions. To use sensors supplied by the drive aux. voltage output, see page *82*.

Input signals

- Two analog references (AI1, 2)
- Start/stop – hand/auto (DI1, 6)
- Direction – hand/auto (DI2, 5)
- Control location selection (DI3)
- Run enable (DI4)

Output signals

- Analog output AO1: Speed
- Analog output AO2: Current
- Relay output 1: Ready
- Relay output 2: Running
- Relay output 3: Fault (-1)

Jumper setting

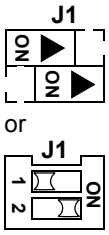

AI1: 0…10 V
AI2: 0(4)…20 mA

or

AI1: 0…10 V
AI2: 0(4)…20 mA

PID Control macro

This macro provides parameter settings for closed-loop control systems such as pressure control, flow control, etc. To enable, set the value of parameter 9902 to 6 (PID CONTROL).

Note: Parameter 2108 START INHIBIT must remain in the default setting, 0 (OFF).

Connection example:

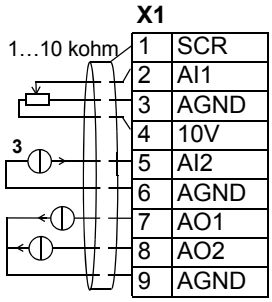

1	SCR	Signal cable shield (screen)
2	AI1	**External ref. 1 (Manual) or Ext ref. 2 (PID):** 0…10 V[1]
3	AGND	Analog input circuit common
4	10V	Reference voltage 10 V DC
5	AI2	**Actual signal (PID):** 4…20 mA
6	AGND	Analog input circuit common
7	AO1	**Motor output speed:** 0…20 mA
8	AO2	**Output current:** 0…20 mA
9	AGND	Analog output circuit common

Note 1.
Manual: 0…10V => speed reference
PID: 0…10V => 0…100% PID setpoint

Note 3.
The sensor for AI2 is powered externally. See the manufacturer's instructions. To use sensors supplied by the drive aux. voltage output, see page *82*.

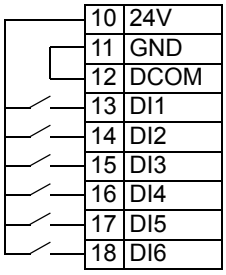

10	24V	Auxiliary voltage output +24 V DC
11	GND	Auxiliary voltage output common
12	DCOM	Digital input common for all
13	DI1	**Start/Stop (Hand):** Activation starts the drive
14	DI2	**EXT1/EXT2 selection:** Activation selects PID control
15	DI3	**Constant speed selection 1:** (Not used in PID control)[2]
16	DI4	**Constant speed selection 2:** (Not used in PID control)[2]
17	DI5	**Run enable:** Deactivation always stops the drive
18	DI6	**Start/Stop (PID):** Activation starts the drive

19	RO1C	Relay output 1, programmable Default operation: **Ready** =>19 connected to 21
20	RO1A	
21	RO1B	
22	RO2C	Relay output 2, programmable Default operation: **Running** =>22 connected to 24
23	RO2A	
24	RO2B	
25	RO3C	Relay output 3, programmable Default operation: **Fault (-1)** =>25 connected to 27 (Fault => 25 connected to 26)
26	RO3A	
27	RO3B	

Note 2. Code:
0 = open, 1 = connected

DI3	DI4	Output
0	0	Reference through AI1
1	0	CONST SPEED 1 (1202)
0	1	CONST SPEED 2 (1203)
1	1	CONST SPEED 3 (1204)

Input signals

- Analog reference (AI1)
- Actual value (AI2)
- Start/stop – hand/PID (DI1, 6)
- EXT1/EXT2 selection (DI2)
- Constant speed selection (DI3, 4)
- Run enable (DI5)

Output signals

- Analog output AO1: Speed
- Analog output AO2: Current
- Relay output 1: Ready
- Relay output 2: Running
- Relay output 3: Fault (-1)

Jumper setting

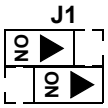

AI1: 0…10 V
AI2: 0(4)…20 mA

or

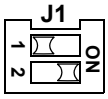

AI1: 0…10 V
AI2: 0(4)…20 mA

Note: Use the following switch-on order:

1. EXT1/EXT2
2. Run Enable
3. Start.

PFC macro

This macro provides parameter settings for pump and fan control (PFC) applications. To enable, set the value of parameter 9902 to 7 (PFC CONTROL).

Note: Parameter 2108 START INHIBIT must remain in the default setting, 0 (OFF).

Connection example:

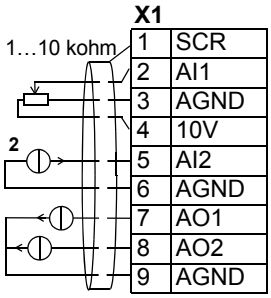

Signal cable shield (screen)
External ref. 1 (Manual) or Ext ref. 2 (PID/PFC): 0…10 V[1]
Analog input circuit common
Reference voltage 10 V DC
Actual signal (PID): 4…20 mA
Analog input circuit common
Output frequency: 0…20 mA
Actual 1 (PI controller actual value): 0(4)…20 mA
Analog output circuit common

Note 1.
Manual: 0…10V => 0…50 Hz
PID/PFC: 0…10V => 0…100% PID setpoint

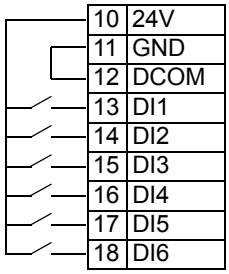

Auxiliary voltage output +24 V DC
Auxiliary voltage output common
Digital input common for all
Start/Stop (Manual): Activation starts the drive
Run enable: Deactivation always stops the drive
EXT1/EXT2 selection: Activation selects PFC control
Interlock: Deactivation always stops the drive
Interlock: Deactivation stops constant speed motor
Start/Stop (PFC): Activation starts the drive

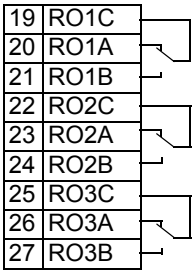

Relay output 1, programmable
Default operation:
Running =>19 connected to 21

Relay output 2, programmable
Default operation:
Fault (-1) =>22 connected to 24 (Fault => 22 connected to 23)

Relay output 3, programmable
Default operation:
Auxiliary motor switched on=>25 connected to 27

Note 2.
The sensor for AI2 is powered externally. See the manufacturer's instructions. To use sensors supplied by the drive aux. voltage output, see page *82*.

Input signals	Output signals	Jumper setting
• Analog ref. and actual (AI1, 2) • Start/stop – manual/PFC (DI1, 6) • Run enable (DI2) • EXT1/EXT2 selection (DI3) • Interlock (DI4, 5)	• Analog output AO1: Frequency • Analog output AO2: Actual 1 • Relay output 1: Running • Relay output 2: Fault (-1) • Relay output 3: Aux. motor ON	J1 AI1: 0…10 V AI2: 0(4)…20 mA or J1 AI1: 0…10 V AI2: 0(4)…20 mA

Note: Use the following switch-on order:

1. EXT1/EXT2
2. Run Enable
3. Start.

Torque Control macro

This macro provides parameter settings for applications that require torque control of the motor. Control can also be switched to speed control. To enable, set the value of parameter 9902 to 8 (TORQUE CTRL).

Connection example:

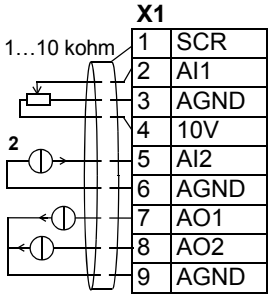

1	SCR	Signal cable shield (screen)
2	AI1	**External speed reference 1:** 0…10 V
3	AGND	Analog input circuit common
4	10V	Reference voltage 10 V DC
5	AI2	**External torque reference:** 4…20 mA
6	AGND	Analog input circuit common
7	AO1	**Motor output speed:** 0…20 mA
8	AO2	**Output current:** 0…20 mA
9	AGND	Analog output circuit common
10	24V	Auxiliary voltage output +24 V DC
11	GND	Auxiliary voltage output common
12	DCOM	Digital input common for all
13	DI1	**Start/stop:** Activation starts the drive.
14	DI2	**Forward/reverse:** Activation reverses direction[1]
15	DI3	**Speed/torque control:** Activation selects torque control
16	DI4	**Constant speed 1:** 1202
17	DI5	**Ramp pair selection:** Activate to select 2nd acc/dec ramp pair
18	DI6	**Run enable:** Deactivation always stops the drive
19	RO1C	Relay output 1, programmable Default operation: **Ready** =>19 connected to 21
20	RO1A	
21	RO1B	
22	RO2C	Relay output 2, programmable Default operation: **Running** =>22 connected to 24
23	RO2A	
24	RO2B	
25	RO3C	Relay output 3, programmable Default operation: **Fault (-1)** =>25 connected to 27 (Fault => 25 connected to 26)
26	RO3A	
27	RO3B	

Note 1.
- Reverses rotation direction in speed control.
- Reverses torque direction in torque control.

Note 2.
The sensor for AI2 is powered externally. See the manufacturer's instructions. To use sensors supplied by the drive aux. voltage output, see page 82.

Input signals
- Two analog references (AI1, 2)
- Start/stop and direction (DI1, 2)
- Speed/torque control (DI3)
- Constant speed selection (DI4)
- Ramp pair 1/2 selection (DI5)
- Run enable (DI6)

Output signals
- Analog output AO1: Speed
- Analog output AO2: Current
- Relay output 1: Ready
- Relay output 2: Running
- Relay output 3: Fault (-1)

Jumper setting

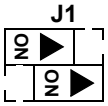

AI1: 0…10 V
AI2: 0(4)…20 mA

or

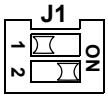

AI1: 0…10 V
AI2: 0(4)…20 mA

Connection examples of two-wire and three-wire sensors

Many applications use process PI(D) and need a feedback signal from the process. The feedback signal is typically connected to analog input 2 (AI2).

The macro wiring diagrams for each macro earlier in this chapter use an externally powered sensor (connections not shown). The figures below give examples of connections using a two-wire or three-wire sensor/transmitter supplied by the drive auxiliary voltage output.

Two-wire sensor/transmitter

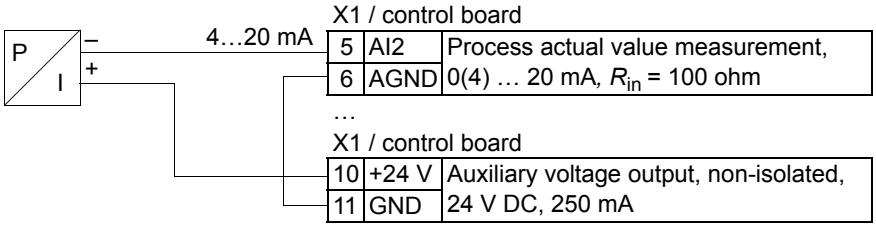

Note: The sensor is supplied through its current output and the drive feeds the supply voltage (+24 V). Thus the output signal must be 4…20 mA, not 0…20 mA

Three-wire sensor/transmitter

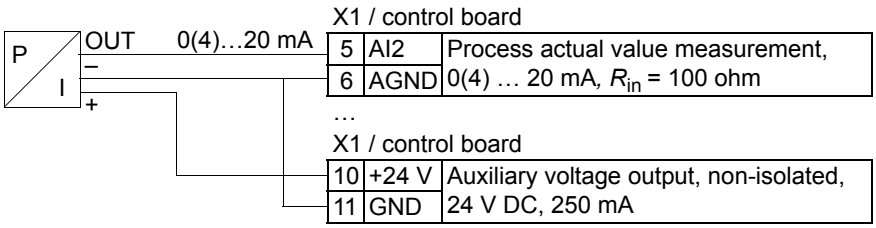

User parameter sets

In addition to the standard application macros, it is possible to save two user parameter sets into the permanent memory and load them at a later time. A user parameter set consists of the user parameter settings, including *Group 99: START-UP DATA*, and the results of the motor identification. The panel reference is also saved if the user parameter set is saved and loaded in local control. The remote control setting is saved into the user parameter set, but the local control setting is not.

The steps below show how to save and load User Parameter Set 1. The procedure for User Parameter Set 2 is identical, only the parameter *9902* values are different.

To save User Parameter Set 1:

- Adjust the parameters. Perform the motor identification if it is needed in the application but it is not done yet.
- Save the parameter settings and the results of the motor identification to the permanent memory by changing parameter *9902* to -1 (USER S1 SAVE).
- Press SAVE (Assistant Control Panel) or MENU ENTER (Basic Control Panel).

To load User Parameter Set 1:

- Change parameter *9902* to 0 (USER S1 LOAD).
- Press SAVE (Assistant Control Panel) or MENU ENTER (Basic Control Panel) to load.

The user parameter set can also be switched through digital inputs (see parameter *1605*).

Note: Loading the user parameter set restores the parameter settings including *Group 99: START-UP DATA* and the results of the motor identification. Check that the settings correspond to the motor used.

Hint: The user can for example switch the drive between two motors without having to adjust the motor parameters and to repeat the motor identification every time the motor is changed. The user needs only to adjust the settings and perform the motor identification once for each motor and then to save the data as two user parameter sets. When the motor is changed, only the corresponding user parameter set needs to be loaded, and the drive is ready to operate.

Macro default values for parameters

Parameter default values are listed in section *Complete parameter list* on page *87*. Changing from the default macro (ABB Standard), that is, editing the value of parameter 9902, changes the parameter default values as defined in the following tables.

Note: There are two sets of values because the defaults are configured for 50 Hz/ IEC compliance (ACS550-01) and 60 Hz/NEMA compliance (ACS550-U1).

ACS550-01

Parameter		ABB Standard	3-wire	Alternate	Motor Potenti-ometer	Hand-auto	PID Control	PFC Control	Torque Control
9902	APPLIC MACRO	1 = ABB STANDARD	2 = 3-WIRE	3 = ALTERNATE	4 = MOTOR POT	5 = HAND/AUTO	6 = PID CONTROL	7 = PFC CONTROL	8 = TORQUE CTRL
9904	MOTOR CTRL MODE	3 = SCALAR: FREQ	1 = VECTOR: SPEED	1 = VECTOR: SPEED	1 = VECTOR: SPEED	1 = VECTOR: SPEED	1 = VECTOR: SPEED	3 = SCALAR: FREQ	2 = VECTOR: TORQUE
1001	EXT1 COMMANDS	2 = DI1,2	4 = DI1P,2P,3	9 = DI1F,2R	2 = DI1,2	2 = DI1,2	1 = DI1	1 = DI1	2 = DI1,2
1002	EXT2 COMMANDS	0 = NOT SEL	0 = NOT SEL	0 = NOT SEL	0 = NOT SEL	7 = DI6,5	6 = DI6	6 = DI6	2 = DI1,2
1003	DIRECTION	3 = REQUEST	3 = REQUEST	3 = REQUEST	3 = REQUEST	3 = REQUEST	1 = FORWARD	1 = FORWARD	3 = REQUEST
1102	EXT1/EXT2 SEL	0 = EXT1	0 = EXT1	0 = EXT1	0 = EXT1	3 = DI3	2 = DI2	3 = DI3	3 = DI3
1103	REF1 SELECT	1 = AI1	1 = AI1	1 = AI1	12 = DI3U,4D(NC)	1 = AI1	1 = AI1	1 = AI1	1 = AI1
1106	REF2 SELECT	2 = AI2	2 = AI2	2 = AI2	2 = AI2	2 = AI2	19 = PID1OUT	19 = PID1OUT	2 = AI2
1201	CONST SPEED SEL	9 = DI3,4	10 = DI4,5	9 = DI3,4	5 = DI5	0 = NOT SEL	9 = DI3,4	0 = NOT SEL	4 = DI4
1304	MINIMUM AI2	0.0%	0.0%	0.0%	0.0%	20.0%	20.0%	20.0%	20.0%
1401	RELAY OUTPUT 1	1 = READY	1 = READY	1 = READY	1 = READY	1 = READY	1 = READY	2 = RUN	1 = READY
1402	RELAY OUTPUT 2	2 = RUN	2 = RUN	2 = RUN	2 = RUN	2 = RUN	2 = RUN	3 = FAULT(-1)	2 = RUN
1403	RELAY OUTPUT 3	3 = FAULT(-1)	3 = FAULT(-1)	3 = FAULT(-1)	3 = FAULT(-1)	3 = FAULT(-1)	3 = FAULT(-1)	31 = PFC	3 = FAULT(-1)
1501	AO1 CONTENT SEL	103 = 0103 OUTPUT FREQ	102 = 0102 SPEED	102 = 0102 SPEED	102 = 0102 SPEED	102 = 0102 SPEED	102 = 0102 SPEED	103 = 0103 OUTPUT FREQ	102 = 0102 SPEED
1507	AO2 CONTENT SEL	104 = CURRENT	104 = CURRENT	104 = CURRENT	104 = CURRENT	104 = CURRENT	104 = CURRENT	130 = PID 1 FBK	104 = CURRENT
1510	MINIMUM AO2	0.0 mA	0.0 mA	0.0 mA	0.0 mA	0.0 mA	0.0 mA	4.0 mA	0.0 mA
1601	RUN ENABLE	0 = NOT SEL	0 = NOT SEL	6 = DI6	6 = DI6	4 = DI4	5 = DI5	2 = DI2	6 = DI6
2201	ACC/DEC 1/2 SEL	5 = DI5	0 = NOT SEL	5 = DI5	0 = NOT SEL	0 = NOT SEL	0 = NOT SEL	0 = NOT SEL	5 = DI5
3201	SUPERV 1 PARAM	103 = 0103 OUTPUT FREQ	102 = 0102 SPEED	102 = 0102 SPEED	102 = 0102 SPEED	102 = 0102 SPEED	102 = 0102 SPEED	103 = 0103 OUTPUT FREQ	102 = 0102 SPEED
3401	SIGNAL1 PARAM	103 = 0103 OUTPUT FREQ	102 = 0102 SPEED	102 = 0102 SPEED	102 = 0102 SPEED	102 = 0102 SPEED	102 = 0102 SPEED	103 = 0103 OUTPUT FREQ	102 = 0102 SPEED
4001	GAIN	1.0	1.0	1.0	1.0	1.0	1.0	2.5	1.0
4002	INTEGRATION TIME	60.0 s	60.0 s	60.0 s	60.0 s	60.0 s	60.0 s	3.0 s	60.0 s
4101	GAIN	1.0	1.0	1.0	1.0	1.0	1.0	2.5	1.0
4102	INTEGRATION TIME	60.0 s	60.0 s	60.0 s	60.0 s	60.0 s	60.0 s	3.0 s	60.0 s
8123	PFC ENABLE	0 = NOT SEL	0 = NOT SEL	0 = NOT SEL	0 = NOT SEL	0 = NOT SEL	0 = NOT SEL	1 = ACTIVE	0 = NOT SEL

ACS550-U1

Parameter		ABB Standard	3-wire	Alternate	Motor Potenti-ometer	Hand-auto	PID Control	PFC Control	Torque Control
9902	APPLIC MACRO	1 = ABB STANDARD	2 = 3-WIRE	3 = ALTERNATE	4 = MOTOR POT	5 = HAND/AUTO	6 = PID CONTROL	7 = PFC CONTROL	8 = TORQUE CTRL
9904	MOTOR CTRL MODE	3 = SCALAR: FREQ	1 = VECTOR: SPEED	1 = VECTOR: SPEED	1 = VECTOR: SPEED	1 = VECTOR: SPEED	1 = VECTOR: SPEED	3 = SCALAR: FREQ	2 = VECTOR: TORQUE
1001	EXT1 COMMANDS	2 = DI1,2	4 = DI1P,2P,3	9 = DI1F,2R	2 = DI1,2	2 = DI1,2	1 = DI1	1 = DI1	2 = DI1,2
1002	EXT2 COMMANDS	0 = NOT SEL	0 = NOT SEL	0 = NOT SEL	0 = NOT SEL	7 = DI6,5	6 = DI6	6 = DI6	2 = DI1,2
1003	DIRECTION	3 = REQUEST	3 = REQUEST	3 = REQUEST	3 = REQUEST	3 = REQUEST	1 = FORWARD	1 = FORWARD	3 = REQUEST
1102	EXT1/EXT2 SEL	0 = EXT1	0 = EXT1	0 = EXT1	0 = EXT1	3 = DI3	2 = DI2	3 = DI3	3 = DI3
1103	REF1 SELECT	1 = AI1	1 = AI1	1 = AI1	12 = DI3U,4D(NC)	1 = AI1	1 = AI1	1 = AI1	1 = AI1
1106	REF2 SELECT	2 = AI2	2 = AI2	2 = AI2	2 = AI2	2 = AI2	19 = PID1OUT	19 = PID1OUT	2 = AI2
1201	CONST SPEED SEL	9 = DI3,4	10 = DI4,5	9 = DI3,4	5 = DI5	0 = NOT SEL	9 = DI3,4	0 = NOT SEL	4 = DI4
1304	MINIMUM AI2	0.0%	0.0%	0.0%	0.0%	20.0%	20.0%	20.0%	20.0%
1401	RELAY OUTPUT 1	1 = READY	1 = READY	1 = READY	1 = READY	1 = READY	1 = READY	2 = RUN	1 = READY
1402	RELAY OUTPUT 2	2 = RUN	2 = RUN	2 = RUN	2 = RUN	2 = RUN	2 = RUN	3 = FAULT(-1)	2 = RUN
1403	RELAY OUTPUT 3	3 = FAULT(-1)	3 = FAULT(-1)	3 = FAULT(-1)	3 = FAULT(-1)	3 = FAULT(-1)	3 = FAULT(-1)	31 = PFC	3 = FAULT(-1)
1501	AO1 CONTENT SEL	103 = 0103 OUTPUT FREQ	102 = 0102 SPEED	102 = 0102 SPEED	102 = 0102 SPEED	102 = 0102 SPEED	102 = 0102 SPEED	103 = 0103 OUTPUT FREQ	102 = 0102 SPEED
1507	AO2 CONTENT SEL	104 = CURRENT	104 = CURRENT	104 = CURRENT	104 = CURRENT	104 = CURRENT	104 = CURRENT	130 = PID 1 FBK	104 = CURRENT
1510	MINIMUM AO2	0.0 mA	0.0 mA	0.0 mA	0.0 mA	0.0 mA	0.0 mA	4.0 mA	0.0 mA
1601	RUN ENABLE	0 = NOT SEL	0 = NOT SEL	6 = DI6	6 = DI6	4 = DI4	5 = DI5	2 = DI2	6 = DI6
2201	ACC/DEC 1/2 SEL	5 = DI5	0 = NOT SEL	5 = DI5	0 = NOT SEL	0 = NOT SEL	0 = NOT SEL	0 = NOT SEL	5 = DI5
3201	SUPERV 1 PARAM	103 = 0103 OUTPUT FREQ	102 = 0102 SPEED	102 = 0102 SPEED	102 = 0102 SPEED	102 = 0102 SPEED	102 = 0102 SPEED	103 = 0103 OUTPUT FREQ	102 = 0102 SPEED
3401	SIGNAL1 PARAM	103 = 0103 OUTPUT FREQ	102 = 0102 SPEED	102 = 0102 SPEED	102 = 0102 SPEED	102 = 0102 SPEED	102 = 0102 SPEED	103 = 0103 OUTPUT FREQ	102 = 0102 SPEED
4001	GAIN	1.0	1.0	1.0	1.0	1.0	1.0	2.5	1.0
4002	INTEGRATION TIME	60.0 s	60.0 s	60.0 s	60.0 s	60.0 s	60.0 s	3.0 s	60.0 s
4101	GAIN	1.0	1.0	1.0	1.0	1.0	1.0	2.5	1.0
4102	INTEGRATION TIME	60.0 s	60.0 s	60.0 s	60.0 s	60.0 s	60.0 s	3.0 s	60.0 s
8123	PFC ENABLE	0 = NOT SEL	0 = NOT SEL	0 = NOT SEL	0 = NOT SEL	0 = NOT SEL	0 = NOT SEL	1 = ACTIVE	0 = NOT SEL

Parameters

Complete parameter list

The following table lists all parameters. Table header abbreviations are:

- S = Parameters can be modified only when the drive is stopped.
- User = Space to enter desired parameter values.

Some values depend on the "construction" as indicated in the table by "-01:" = Setup and parts specific to IEC installation and compliance or "-U1:" = Setup and parts specific to US installation and NEMA compliance. Refer to the type designation on the drive, for example ACS550-**01**-08A8-4.

Code	Name	Range	Resolution	Default	User	S
Group 99: START-UP DATA						
9901	LANGUAGE	0…16 / 0…3	1	0 (ENGLISH)		
9902	APPLIC MACRO	-3…8, 31	1	1 (ABB STANDARD)		✓
9904	MOTOR CTRL MODE	1 = VECTOR:SPEED, 2 = VECTOR:TORQUE, 3 = SCALAR:FREQ	1	3 (SCALAR:FREQ)		✓
9905	MOTOR NOM VOLT	-01-yyyy-2: 115…345 V / -U1-yyyy-2: 115…345 V -01-yyyy-4: 200…600 V / -U1-yyyy-4: 230…690 V -U1-yyyy-6: 288…862 V	1 V	-01-yyyy-2: 230 V / -U1-yyyy-2: 230 V -01:-yyyy-4 400 V / -U1-yyyy-4: 460 V -U1-yyyy-6: 575 V		✓
9906	MOTOR NOM CURR	$0.2 \cdot I_{2hd}$ … $2.0 \cdot I_{2hd}$	0.1 A	$1.0 \cdot I_{2hd}$		✓
9907	MOTOR NOM FREQ	10.0…500.0 Hz	0.1 Hz	-01: 50.0 Hz / -U1: 60.0 Hz		✓
9908	MOTOR NOM SPEED	50…30000 rpm	1 rpm	Size dependent		✓
9909	MOTOR NOM POWER	$0.2…3.0 \cdot P_{hd}$	-01: 0.1 kW / -U1: 0.1 hp	$1.0 \cdot P_{hd}$		✓
9910	ID RUN	0 = OFF/IDMAGN, 1 = ON	1	0 (OFF/IDMAGN)		✓
9915	MOTOR COSPHI	0 = IDENTIFIED, 0.01…0.97	0.01	0 (IDENTIFIED)		✓
Group 01: OPERATING DATA						
0101	SPEED & DIR	-30000…30000 rpm	1 rpm	-		
0102	SPEED	0…30000 rpm	1 rpm	-		
0103	OUTPUT FREQ	0.0…500.0 Hz	0.1 Hz	-		
0104	CURRENT	$0.0…2.0 \cdot I_{2hd}$	0.1 A	-		
0105	TORQUE	-200.0…200.0%	0.1%	-		
0106	POWER	$-2.0…2.0 \cdot P_{hd}$	0.1 kW	-		
0107	DC BUS VOLTAGE	$0…2.5 \cdot V_{dN}$	1 V	-		
0109	OUTPUT VOLTAGE	$0…2.0 \cdot V_{dN}$	1 V	-		
0110	DRIVE TEMP	0.0…150.0 °C	0.1 °C	-		
0111	EXTERNAL REF 1	0.0…500.0 Hz / 0…30000 rpm	0.1 Hz / 1 rpm	-		
0112	EXTERNAL REF 2	0.0…100.0% (0.0…600.0% for torque)	0.1%	-		
0113	CTRL LOCATION	0 = LOCAL, 1 = EXT1, 2 = EXT2	1	-		

Code	Name	Range	Resolution	Default	User	S
0114	RUN TIME (R)	0…9999 h	1 h	-		
0115	KWH COUNTER (R)	0…65535 kWh	1 kWh	-		
0116	APPL BLK OUTPUT	0.0…100.0% (0.0…600.0% for torque)	0.1%	-		
0118	DI 1-3 STATUS	000…111 (0…7 decimal)	1	-		
0119	DI 4-6 STATUS	000…111 (0…7 decimal)	1	-		
0120	AI 1	0.0…100.0%	0.1%	-		
0121	AI 2	0.0…100.0%	0.1%	-		
0122	RO 1-3 STATUS	000…111 (0…7 decimal)	1	-		
0123	RO 4-6 STATUS	000…111 (0…7 decimal)	1	-		
0124	AO 1	0.0…20.0 mA	0.1 mA	-		
0125	AO 2	0.0…20.0 mA	0.1 mA	-		
0126	PID 1 OUTPUT	-1000.0…1000.0%	0.1%	-		
0127	PID 2 OUTPUT	-100.0…100.0%	0.1%	-		
0128	PID 1 SETPNT	Unit and scale defined by par. 4006/ 4106 and 4007/4107	-	-		
0129	PID 2 SETPNT	Unit and scale defined by par. 4206 and 4207		-		
0130	PID 1 FBK	Unit and scale defined by par. 4006/ 4106 and 4007/4107	-	-		
0131	PID 2 FBK	Unit and scale defined by par. 4206 and 4207	-	-		
0132	PID 1 DEVIATION	Unit and scale defined by par. 4006/ 4106 and 4007/4107	-	-		
0133	PID 2 DEVIATION	Unit and scale defined by par. 4206 and 4207	-	-		
0134	COMM RO WORD	0…65535	1	-		
0135	COMM VALUE 1	-32768…+32767	1	-		
0136	COMM VALUE 2	-32768…+32767	1	-		
0137	PROCESS VAR 1	-	1			
0138	PROCESS VAR 2	-	1			
0139	PROCESS VAR 3	-	1			
0140	RUN TIME	0.00…499.99 kh	0.01 kh	-		
0141	MWH COUNTER	0…65535 MWh	1 MWh	-		
0142	REVOLUTION CNTR	0…65535 Mrev	1 Mrev	-		
0143	DRIVE ON TIME HI	0…65535 days	1 day	-		
0144	DRIVE ON TIME LO	00:00:00…23:59:58	1 = 2 s	-		
0145	MOTOR TEMP	Par. 3501 = 1…3: -10…200 °C Par. 3501 = 4: 0…5000 ohm Par. 3501 = 5…6: 0…1	1	-		
0146	MECH ANGLE	0…32768	1	-		
0147	MECH REVS	-32768 …+32767	1	-		
0148	Z PLS DETECTED	0 = NOT DETECTED, 1 = DETECTED	1	-		
0150	CB TEMP	-20.0…150.0 °C	1.0 °C	-		
0153	MOT THERM STRESS	0.0…100.0%	0.1%	-		
0158	PID COMM VALUE 1	-32768 …+32767	1	-		
0159	PID COMM VALUE 2	-32768 …+32767	1	-		
0174	SAVED KWH	0.0…999.9 kWh	0.1 kWh	-		

Code	Name	Range	Resolution	Default	User	S
0175	SAVED MWH	0…65535 MWh	1 MWh	-		
0176	SAVED AMOUNT 1	0.0…999.9	0.1	-		
0177	SAVED AMOUNT 2	0…65535	1	-		
0178	SAVED CO2	0.0…6553.5 tn	0.1 tn	-		
Group 03: FB ACTUAL SIGNALS						
0301	FB CMD WORD 1	-	-	-		
0302	FB CMD WORD 2	-	-	-		
0303	FB STS WORD 1	-	-	-		
0304	FB STS WORD 2	-	1	-		
0305	FAULT WORD 1	-	1	-		
0306	FAULT WORD 2	-	1	-		
0307	FAULT WORD 3	-	1	-		
0308	ALARM WORD 1	-	1	-		
0309	ALARM WORD 2	-	1	-		
Group 04: FAULT HISTORY						
0401	LAST FAULT	Fault codes (panel displays as text)	1	0		
0402	FAULT TIME 1	Date dd.mm.yy / power-on time in days	1 day	0		
0403	FAULT TIME 2	Time hh.mm.ss	2 s	0		
0404	SPEED AT FLT	-32768…+32767	1 rpm	0		
0405	FREQ AT FLT	-3276.8…+3276.7	0.1 Hz	0		
0406	VOLTAGE AT FLT	0.0…6553.5	0.1 V	0		
0407	CURRENT AT FLT	0.0…6553.5	0.1 A	0		
0408	TORQUE AT FLT	-3276.8…+3276.7	0.1%	0		
0409	STATUS AT FLT	0000…FFFF hex	1	0		
0410	DI 1-3 AT FLT	000…111 (0…7 decimal)	1	0		
0411	DI 4-6 AT FLT	000…111 (0…7 decimal)	1	0		
0412	PREVIOUS FAULT 1	As par. 0401	1	0		
0413	PREVIOUS FAULT 2	As par. 0401	1	0		
Group 10: START/STOP/DIR						
1001	EXT1 COMMANDS	0…14	1	2 (DI1,2)		✓
1002	EXT2 COMMANDS	0…14	1	0 (NOT SEL)		✓
1003	DIRECTION	1 = FORWARD, 2 = REVERSE, 3 = REQUEST	1	3 (REQUEST)		✓
1004	JOGGING SEL	-6…6	1	0 (NOT SEL)		✓
Group 11: REFERENCE SELECT						
1101	KEYPAD REF SEL	1 = REF1(Hz/rpm), 2 = REF2(%)	1	1 [REF1(Hz/rpm)]		
1102	EXT1/EXT2 SEL	-6…12	1	0 (EXT1)		✓
1103	REF1 SELECT	0…17, 20…21	1	1 (AI1)		✓
1104	REF1 MIN	0.0…500.0 Hz / 0…30000 rpm	0.1 Hz / 1 rpm	0.0 Hz / 0 rpm		
1105	REF1 MAX	0.0…500.0 Hz / 0…30000 rpm	0.1 Hz / 1 rpm	-01: 50.0 (52.0) Hz / 1500 rpm -U1: 60.0 (62.0) Hz / 1800 rpm		
1106	REF2 SELECT	0…17, 19…21	1	2 (AI2)		✓
1107	REF2 MIN	0.0…100.0% (0.0…600.0% for torque)	0.1%	0.0%		
1108	REF2 MAX	0.0…100.0% (0.0…600.0% for torque)	0.1%	100.0%		

Code	Name	Range	Resolution	Default	User	S
Group 12: CONSTANT SPEEDS						
1201	CONST SPEED SEL	-14 …19	1	9 (DI3,4)		✓
1202	CONST SPEED 1	0.0…500.0 Hz / 0…30000 rpm	0.1 Hz / 1 rpm	-01: 5.0 Hz / 300 rpm -U1: 6.0 Hz / 360 rpm		
1203	CONST SPEED 2	0.0…500.0 Hz / 0…30000 rpm	0.1 Hz / 1 rpm	-01: 10.0 Hz / 600 rpm -U1: 12.0 Hz / 720 rpm		
1204	CONST SPEED 3	0.0…500.0 Hz / 0…30000 rpm	0.1 Hz / 1 rpm	-01: 15.0 Hz / 900 rpm -U1: 18.0 Hz / 1080 rpm		
1205	CONST SPEED 4	0.0…500.0 Hz / 0…30000 rpm	0.1 Hz / 1 rpm	-01: 20.0 Hz / 1200 rpm -U1: 24.0 Hz / 1440 rpm		
1206	CONST SPEED 5	0.0…500.0 Hz / 0…30000 rpm	0.1 Hz / 1 rpm	-01: 25.0 Hz / 1500 rpm -U1: 30.0 Hz / 1800 rpm		
1207	CONST SPEED 6	0.0…500.0 Hz / 0…30000 rpm	0.1 Hz / 1 rpm	-01: 40.0 Hz / 2400 rpm -U1: 48.0 Hz / 2880 rpm		
1208	CONST SPEED 7	0.0…500.0 Hz / 0…30000 rpm	0.1 Hz / 1 rpm	-01: 50.0 Hz / 3000 rpm -U1: 60.0 Hz / 3600 rpm		
1209	TIMED MODE SEL	1 = EXT/CS1/2/3, 2 = CS1/2/3/4	1	2 (CS1/2/3/4)		✓
Group 13: ANALOG INPUTS						
1301	MINIMUM AI1	0.0…100.0%	0.1%	0.0%		
1302	MAXIMUM AI1	0.0…100.0%	0.1%	100.0%		
1303	FILTER AI1	0.0…10.0 s	0.1 s	0.1 s		
1304	MINIMUM AI2	0.0…100.0%	0.1%	0.0%		
1305	MAXIMUM AI2	0.0…100.0%	0.1%	100.0%		
1306	FILTER AI2	0.0…10.0 s	0.1 s	0.1 s		
Group 14: RELAY OUTPUTS						
1401	RELAY OUTPUT 1	0…44, 46, 47, 52	1	1 (READY)		
1402	RELAY OUTPUT 2	0…44, 46, 47, 52	1	2 (RUN)		
1403	RELAY OUTPUT 3	0…44, 46, 47, 52	1	3 [FAULT(-1)]		
1404	RO 1 ON DELAY	0.0…3600.0 s	0.1 s	0.0 s		
1405	RO 1 OFF DELAY	0.0…3600.0 s	0.1 s	0.0 s		
1406	RO 2 ON DELAY	0.0…3600.0 s	0.1 s	0.0 s		
1407	RO 2 OFF DELAY	0.0…3600.0 s	0.1 s	0.0 s		
1408	RO 3 ON DELAY	0.0…3600.0 s	0.1 s	0.0 s		
1409	RO 3 OFF DELAY	0.0…3600.0 s	0.1 s	0.0 s		
1410	RELAY OUTPUT 4	0…44, 46, 47, 52	1	0 (NOT SEL)		
1411	RELAY OUTPUT 5	0…44, 46, 47, 52	1	0 (NOT SEL)		
1412	RELAY OUTPUT 6	0…44, 46, 47, 52	1	0 (NOT SEL)		
1413	RO 4 ON DELAY	0.0…3600.0 s	0.1 s	0.0 s		
1414	RO 4 OFF DELAY	0.0…3600.0 s	0.1 s	0.0 s		
1415	RO 5 ON DELAY	0.0…3600.0 s	0.1 s	0.0 s		
1416	RO 5 OFF DELAY	0.0…3600.0 s	0.1 s	0.0 s		
1417	RO 6 ON DELAY	0.0…3600.0 s	0.1 s	0.0 s		
1418	RO 6 OFF DELAY	0.0…3600.0 s	0.1 s	0.0 s		
Group 15: ANALOG OUTPUTS						
1501	AO1 CONTENT SEL	99…178	1	103 (parameter 0103 OUTPUT FREQ)		

Code	Name	Range	Resolution	Default	User	S
1502	AO1 CONTENT MIN	-	-	Depends on the signal selected with par. 1501		
1503	AO1 CONTENT MAX	-	-	Depends on the signal selected with par. 1501		
1504	MINIMUM AO1	0.0…20.0 mA	0.1 mA	0.0 mA		
1505	MAXIMUM AO1	0.0…20.0 mA	0.1 mA	20.0 mA		
1506	FILTER AO1	0.0…10.0 s	0.1 s	0.1 s		
1507	AO2 CONTENT SEL	99…178	1	104 (parameter 0104 CURRENT)		
1508	AO2 CONTENT MIN	-	-	Depends on the signal selected with par. 1507		
1509	AO2 CONTENT MAX	-	-	Depends on the signal selected with par. 1507		
1510	MINIMUM AO2	0.0…20.0 mA	0.1 mA	0.0 mA		
1511	MAXIMUM AO2	0.0…20.0 mA	0.1 mA	20.0 mA		
1512	FILTER AO2	0.0…10.0 s	0.1 s	0.1 s		
Group 16: SYSTEM CONTROLS						
1601	RUN ENABLE	-6…7	1	0 (NOT SEL)		✓
1602	PARAMETER LOCK	0 = LOCKED, 1 = OPEN, 2 = NOT SAVED	1	1 (OPEN)		
1603	PASS CODE	0…65535	1	0		
1604	FAULT RESET SEL	-6…8	1	0 (KEYPAD)		
1605	USER PAR SET CHG	-6…6	1	0 (NOT SEL)		
1606	LOCAL LOCK	-6…8	1	0 (NOT SEL)		
1607	PARAM SAVE	0 = DONE, 1 = SAVE…	1	0 (DONE)		
1608	START ENABLE 1	-6…7	1	0 (NOT SEL)		✓
1609	START ENABLE 2	-6…7	1	0 (NOT SEL)		✓
1610	DISPLAY ALARMS	0 = NO, 1 = YES	1	0 (NO)		
1611	PARAMETER VIEW	0 = DEFAULT, 1 = FLASHDROP	1	0 (DEFAULT)		
Group 20: LIMITS						
2001	MINIMUM SPEED	-30000…30000 rpm	1 rpm	0 rpm		✓
2002	MAXIMUM SPEED	0…30000 rpm	1 rpm	-01: 1500 rpm / -U1: 1800 rpm		✓
2003	MAX CURRENT	0… 1.8 · I_{2hd}	0.1 A	1.8 · I_{2hd}		✓
2005	OVERVOLT CTRL	0 = DISABLE, 1 = ENABLE	1	1 (ENABLE)		
2006	UNDERVOLT CTRL	0 = DISABLE, 1 = ENABLE(TIME), 2 = ENABLE	1	1 [ENABLE(TIME)]		
2007	MINIMUM FREQ	-500.0…500.0 Hz	0.1 Hz	0.0 Hz		✓
2008	MAXIMUM FREQ	0.0…500.0 Hz	0.1 Hz	-01: 50.0 (52.0) Hz / -U1: 60.0 (62.0) Hz		✓
2013	MIN TORQUE SEL	-6…7	1	0 (MIN TORQUE 1)		
2014	MAX TORQUE SEL	-6…7	1	0 (MAX TORQUE 1)		
2015	MIN TORQUE 1	-600.0…0.0%	0.1%	-300.0%		
2016	MIN TORQUE 2	-600.0…0.0%	0.1%	-300.0%		
2017	MAX TORQUE 1	0.0…600.0%	0.1%	300.0%		
2018	MAX TORQUE 2	0.0…600.0%	0.1%	300.0%		

Code	Name	Range	Resolution	Default	User	S
Group 21: START/STOP						
2101	START FUNCTION	Vector control modes: 1, 2, 8 Scalar control mode: 1…5, 8	1	8 (RAMP)		✓
2102	STOP FUNCTION	1 = COAST, 2 = RAMP	1	1 (COAST)		
2103	DC MAGN TIME	0.00…10.00 s	0.01 s	0.30 s		
2104	DC HOLD CTL	0 = NOT SEL, 1 = DC HOLD, 2 = DC BRAKING	1	0 (NOT SEL)		✓
2105	DC HOLD SPEED	0…360 rpm	1 rpm	5 rpm		
2106	DC CURR REF	0…100%	1%	30%		
2107	DC BRAKE TIME	0.0…250.0 s	0.1 s	0.0 s		
2108	START INHIBIT	0 = OFF, 1 = ON	1	0 (OFF)		
2109	EMERG STOP SEL	-6…6	1	0 (NOT SEL)		
2110	TORQ BOOST CURR	15…300%	1%	100%		
2112	ZERO SPEED DELAY	0.0 = NOT SEL, 0.1…60.0 s	0.1 s	0.0 s (NOT SEL)		
2113	START DELAY	0.00…60.00 s	0.01 s	0.00 s		
Group 22: ACCEL/DECEL						
2201	ACC/DEC 1/2 SEL	-6…7	1	5 (DI5)		
2202	ACCELER TIME 1	0.0…1800.0 s	0.1 s	5.0 s		
2203	DECELER TIME 1	0.0…1800.0 s	0.1 s	5.0 s		
2204	RAMP SHAPE 1	0.0 = LINEAR, 0.1…1000.0 s	0.1 s	0.0 s		
2205	ACCELER TIME 2	0.0…1800.0 s	0.1 s	60.0 s		
2206	DECELER TIME 2	0.0…1800.0 s	0.1 s	60.0 s		
2207	RAMP SHAPE 2	0.0 = LINEAR, 0.1…1000.0 s	0.1 s	0.0 s		
2208	EMERG DEC TIME	0.0…1800.0 s	0.1 s	1.0 s		
2209	RAMP INPUT 0	-6…7	1	0 (NOT SEL)		
Group 23: SPEED CONTROL						
2301	PROP GAIN	0.00…200.00	0.01	5.00		
2302	INTEGRATION TIME	0.00…600.00 s	0.01 s	0.50 s		
2303	DERIVATION TIME	0…10000 ms	1 ms	0 ms		
2304	ACC COMPENSATION	0.00…600.00 s	0.01 s	0.00 s		
2305	AUTOTUNE RUN	0 = OFF, 1 = ON	1	0 (OFF)		
Group 24: TORQUE CONTROL						
2401	TORQ RAMP UP	0.00…120.00 s	0.01 s	0.00 s		
2402	TORQ RAMP DOWN	0.00…120.00 s	0.01 s	0.00 s		
Group 25: CRITICAL SPEEDS						
2501	CRIT SPEED SEL	0 = OFF, 1 = ON	1	0 (OFF)		
2502	CRIT SPEED 1 LO	0.0…500.0 Hz / 0…30000 rpm	0.1 Hz / 1 rpm	0.0 Hz / 0 rpm		
2503	CRIT SPEED 1 HI	0.0…500.0 Hz / 0…30000 rpm	0.1 Hz / 1 rpm	0.0 Hz / 0 rpm		
2504	CRIT SPEED 2 LO	0.0…500.0 Hz / 0…30000 rpm	0.1 Hz / 1 rpm	0.0 Hz / 0 rpm		
2505	CRIT SPEED 2 HI	0.0…500.0 Hz / 0…30000 rpm	0.1 Hz / 1 rpm	0.0 Hz / 0 rpm		
2506	CRIT SPEED 3 LO	0.0…500.0 Hz / 0…30000 rpm	0.1 Hz / 1 rpm	0.0 Hz / 0 rpm		
2507	CRIT SPEED 3 HI	0.0…500.0 Hz / 0…30000 rpm	0.1 Hz / 1 rpm	0.0 Hz / 0 rpm		
Group 26: MOTOR CONTROL						
2601	FLUX OPT ENABLE	0 = OFF, 1 = ON	1	0 (OFF)		
2602	FLUX BRAKING	0 = OFF, 1 = ON	1	0 (OFF)		

Code	Name	Range	Resolution	Default	User	S
2603	IR COMP VOLT	0.0…100.0 V	0.1 V	Size dependent		
2604	IR COMP FREQ	0…100%	1%	80%		
2605	U/F RATIO	1 = LINEAR, 2 = SQUARED	1	1 (LINEAR)		
2606	SWITCHING FREQ	1, 2, 4, 8, 12 kHz	-	4 kHz		
2607	SWITCH FREQ CTRL	0 = OFF, 1 = ON	1	1 (ON)		
2608	SLIP COMP RATIO	0…200%	1%	0%		
2609	NOISE SMOOTHING	0 = DISABLE, 1 = ENABLE	1	0 (DISABLE)		
2619	DC STABILIZER	0 = DISABLE, 1 = ENABLE	1	0 (DISABLE)		
Group 29: MAINTENANCE TRIG						
2901	COOLING FAN TRIG	0.0…6553.5 kh, 0.0 disables	0.1 kh	0.0 kh		
2902	COOLING FAN ACT	0.0…6553.5 kh	0.1 kh	0.0 kh		
2903	REVOLUTION TRIG	0…65535 Mrev, 0 disables	1 Mrev	0 Mrev		
2904	REVOLUTION ACT	0…65535 Mrev	1 Mrev	0 Mrev		
2905	RUN TIME TRIG	0.0…6553.5 kh, 0.0 disables	0.1 kh	0.0 kh		
2906	RUN TIME ACT	0.0…6553.5 kh	0.1 kh	0.0 kh		
2907	USER MWh TRIG	0.0…6553.5 MWh, 0.0 disables	0.1 MWh	0.0 MWh		
2908	USER MWh ACT	0.0…6553.5 MWh	0.1 MWh	0.0 MWh		
Group 30: FAULT FUNCTIONS						
3001	AI<MIN FUNCTION	0…3	1	0 (NOT SEL)		
3002	PANEL COMM ERR	1…3	1	1 (FAULT)		
3003	EXTERNAL FAULT 1	-6…6	1	0 (NOT SEL)		
3004	EXTERNAL FAULT 2	-6…6	1	0 (NOT SEL)		
3005	MOT THERM PROT	0 = NOT SEL, 1 = FAULT, 2 = ALARM	1	1 (FAULT)		
3006	MOT THERM TIME	256…9999 s	1 s	500 s		
3007	MOT LOAD CURVE	50…150%	1%	100%		
3008	ZERO SPEED LOAD	25…150%	1%	70%		
3009	BREAK POINT FREQ	1…250 Hz	1 Hz	35 Hz		
3010	STALL FUNCTION	0 = NOT SEL, 1 = FAULT, 2 = ALARM	1	0 (NOT SEL)		
3011	STALL FREQUENCY	0.5…50.0 Hz	0.1 Hz	20.0 Hz		
3012	STALL TIME	10…400 s	1 s	20 s		
3017	EARTH FAULT	0 = DISABLE, 1 = ENABLE	1	1 (ENABLE)		✓
3018	COMM FAULT FUNC	0 = NOT SEL, 1 = FAULT, 2 = CONST SP 7, 3 = LAST SPEED	1	0 (NOT SEL)		
3019	COMM FAULT TIME	0.0…600.0 s	0.1 s	3.0 s		
3021	AI1 FAULT LIMIT	0.0…100.0%	0.1%	0.0%		
3022	AI2 FAULT LIMIT	0.0…100.0%	0.1%	0.0%		
3023	WIRING FAULT	0 = DISABLE, 1 = ENABLE	1	1 (ENABLE)		✓
3024	CB TEMP FAULT	0 = DISABLE, 1 = ENABLE	1	1 (ENABLE)		
Group 31: AUTOMATIC RESET						
3101	NUMBER OF TRIALS	0…5	1	0		
3102	TRIAL TIME	1.0…600.0 s	0.1 s	30.0 s		
3103	DELAY TIME	0.0…120.0 s	0.1 s	0.0 s		
3104	AR OVERCURRENT	0 = DISABLE, 1 = ENABLE	1	0 (DISABLE)		
3105	AR OVERVOLTAGE	0 = DISABLE, 1 = ENABLE	1	0 (DISABLE)		
3106	AR UNDERVOLTAGE	0 = DISABLE, 1 = ENABLE	1	0 (DISABLE)		

Code	Name	Range	Resolution	Default	User	S
3107	AR AI<MIN	0 = DISABLE, 1 = ENABLE	1	0 (DISABLE)		
3108	AR EXTERNAL FLT	0 = DISABLE, 1 = ENABLE	1	0 (DISABLE)		
Group 32: SUPERVISION						
3201	SUPERV 1 PARAM	100 = NOT SELECTED, 101…178	1	103 (parameter 0103 OUTPUT FREQ)		
3202	SUPERV 1 LIM LO	-	-	Depends on the signal selected with par. 3201		
3203	SUPERV 1 LIM HI	-	-	Depends on the signal selected with par. 3201		
3204	SUPERV 2 PARAM	100 = NOT SELECTED, 101…178	1	104 (parameter 0104 CURRENT)		
3205	SUPERV 2 LIM LO	-	-	Depends on the signal selected with par. 3204		
3206	SUPERV 2 LIM HI	-	-	Depends on the signal selected with par. 3204		
3207	SUPERV 3 PARAM	100 = NOT SELECTED, 101…178	1	105 (parameter 0105 TORQUE)		
3208	SUPERV 3 LIM LO	-	-	Depends on the signal selected with par. 3207		
3209	SUPERV 3 LIM HI	-	-	Depends on the signal selected with par. 3207		
Group 33: INFORMATION						
3301	FIRMWARE	0000…FFFF hex	1	Firmware version		
3302	LOADING PACKAGE	0000…FFFF hex	1	Type dependent		
3303	TEST DATE	yy.ww	0.01	-		
3304	DRIVE RATING	-	-	Type dependent		
3305	PARAMETER TABLE	0000…FFFF hex	1	Type dependent		
Group 34: PANEL DISPLAY						
3401	SIGNAL1 PARAM	100 = NOT SELECTED, 101…178	1	103 (parameter 0103 OUTPUT FREQ)		
3402	SIGNAL1 MIN	-	-	Depends on the signal selected with par. 3401		
3403	SIGNAL1 MAX	-	-	Depends on the signal selected with par. 3401		
3404	OUTPUT1 DSP FORM	0…9	1	9 (DIRECT)		
3405	OUTPUT1 UNIT	0…127	1	Depends on the signal selected with par. 3401		
3406	OUTPUT1 MIN	-	-	Depends on the signal selected with par. 3401		
3407	OUTPUT1 MAX	-	-	Depends on the signal selected with par. 3401		
3408	SIGNAL2 PARAM	100 = NOT SELECTED, 101…178	1	104 (parameter 0104 CURRENT)		
3409	SIGNAL2 MIN	-	-	Depends on the signal selected with par. 3408		
3410	SIGNAL2 MAX	-	-	Depends on the signal selected with par. 3408		
3411	OUTPUT2 DSP FORM	0…9	1	9 (DIRECT)		
3412	OUTPUT2 UNIT	0…127	1	Depends on the signal selected with par. 3408		

Code	Name	Range	Resolution	Default	User	S
3413	OUTPUT2 MIN	-	-	Depends on the signal selected with par. 3408		
3414	OUTPUT2 MAX	-	-	Depends on the signal selected with par. 3408		
3415	SIGNAL3 PARAM	100 = NOT SELECTED, 101…178	1	105 (parameter 0105 TORQUE)		
3416	SIGNAL3 MIN	-	-	Depends on the signal selected with par. 3415		
3417	SIGNAL3 MAX	-	-	Depends on the signal selected with par. 3415		
3418	OUTPUT3 DSP FORM	0…9	1	9 (DIRECT)		
3419	OUTPUT3 UNIT	0…127	1	Depends on the signal selected with par. 3415		
3420	OUTPUT3 MIN	-	-	Depends on the signal selected with par. 3415		
3421	OUTPUT3 MAX	-	-	Depends on the signal selected with par. 3415		
Group 35: MOTOR TEMP MEAS						
3501	SENSOR TYPE	0…6	1	0 (NONE)		
3502	INPUT SELECTION	1…8	1	1 (AI1)		
3503	ALARM LIMIT	Par. 3501 = 1…3: -10…200 °C Par. 3501 = 4: 0…5000 ohm Par. 3501 = 5…6: 0…1	1	110 °C / 1500 ohm / 0		
3504	FAULT LIMIT	Par. 3501 = 1…3: -10…200 °C Par. 3501 = 4: 0…5000 ohm Par. 3501 = 5…6: 0…1	1	130 °C / 4000 ohm / 0		
Group 36: TIMED FUNCTIONS						
3601	TIMERS ENABLE	-6…7	1	0 (NOT SEL)		
3602	START TIME 1	00:00:00…23:59:58	2 s	00:00:00		
3603	STOP TIME 1	00:00:00…23:59:58	2 s	00:00:00		
3604	START DAY 1	1…7	1	1 (MONDAY)		
3605	STOP DAY 1	1…7	1	1 (MONDAY)		
3606	START TIME 2	00:00:00…23:59:58	2 s	00:00:00		
3607	STOP TIME 2	00:00:00…23:59:58	2 s	00:00:00		
3608	START DAY 2	1…7	1	1 (MONDAY)		
3609	STOP DAY 2	1…7	1	1 (MONDAY)		
3610	START TIME 3	00:00:00…23:59:58	2 s	00:00:00		
3611	STOP TIME 3	00:00:00…23:59:58	2 s	00:00:00		
3612	START DAY 3	1…7	1	1 (MONDAY)		
3613	STOP DAY 3	1…7	1	1 (MONDAY)		
3614	START TIME 4	00:00:00…23:59:58	2 s	00:00:00		
3615	STOP TIME 4	00:00:00…23:59:58	2 s	00:00:00		
3616	START DAY 4	1…7	1	1 (MONDAY)		
3617	STOP DAY 4	1…7	1	1 (MONDAY)		
3622	BOOSTER SEL	-6…6	1	0 (NOT SEL)		
3623	BOOSTER TIME	00:00:00…23:59:58	2 s	00:00:00		
3626 … 3629	TIMED FUNC 1…4 SRC	0…31	1	0 (NOT SEL)		

Code	Name	Range	Resolution	Default	User	S
Group 37: USER LOAD CURVE						
3701	USER LOAD C MODE	0…3	1	0 (NOT SEL)		
3702	USER LOAD C FUNC	1 = FAULT, 2 = ALARM	1	1 (FAULT)		
3703	USER LOAD C TIME	10…400 s	1 s	20 s		
3704	LOAD FREQ 1	0…500 Hz	1 Hz	5 Hz		
3705	LOAD TORQ LOW 1	0…600%	1%	10%		
3706	LOAD TORQ HIGH 1	0…600%	1%	300%		
3707	LOAD FREQ 2	0…500 Hz	1 Hz	25 Hz		
3708	LOAD TORQ LOW 2	0…600%	1%	15%		
3709	LOAD TORQ HIGH 2	0…600%	1%	300%		
3710	LOAD FREQ 3	0…500 Hz	1 Hz	43 Hz		
3711	LOAD TORQ LOW 3	0…600%	1%	25%		
3712	LOAD TORQ HIGH 3	0…600%	1%	300%		
3713	LOAD FREQ 4	0…500 Hz	1 Hz	50 Hz		
3714	LOAD TORQ LOW 4	0…600%	1%	30%		
3715	LOAD TORQ HIGH 4	0…600%	1%	300%		
3716	LOAD FREQ 5	0…500 Hz	1 Hz	500 Hz		
3717	LOAD TORQ LOW 5	0…600%	1%	30%		
3718	LOAD TORQ HIGH 5	0…600%	1%	300%		
Group 40: PROCESS PID SET 1						
4001	GAIN	0.1…100.0	0.1	1.0		
4002	INTEGRATION TIME	0.0 = NOT SEL, 0.1…3600.0 s	0.1 s	60.0 s		
4003	DERIVATION TIME	0.0…10.0 s	0.1 s	0.0 s		
4004	PID DERIV FILTER	0.0…10.0 s	0.1 s	1.0 s		
4005	ERROR VALUE INV	0 = NO, 1 = YES	1	0 (NO)		
4006	UNITS	0…127	1	4 (%)		
4007	UNIT SCALE	0…4	1	1		
4008	0% VALUE	Unit and scale defined by par. 4006 and 4007	-	0.0		
4009	100% VALUE	Unit and scale defined by par. 4006 and 4007	-	100.0		
4010	SET POINT SEL	0…2, 8…17, 19…20	1	1 (AI1)		✓
4011	INTERNAL SETPNT	Unit and scale defined by par. 4006 and 4007	-	40.0		
4012	SETPOINT MIN	-500.0…500.0%	0.1%	0.0%		
4013	SETPOINT MAX	-500.0…500.0%	0.1%	100.0%		
4014	FBK SEL	1…13	1	1 (ACT1)		
4015	FBK MULTIPLIER	0.000 = NOT SEL, -32.768…32.767	0.001	0.000 (NOT SEL)		
4016	ACT1 INPUT	1…7	1	2 (AI2)		✓
4017	ACT2 INPUT	1…7	1	2 (AI2)		✓
4018	ACT1 MINIMUM	-1000…1000%	1%	0%		
4019	ACT1 MAXIMUM	-1000…1000%	1%	100%		
4020	ACT2 MINIMUM	-1000…1000%	1%	0%		
4021	ACT2 MAXIMUM	-1000…1000%	1%	100%		
4022	SLEEP SELECTION	-6…7	1	0 (NOT SEL)		
4023	PID SLEEP LEVEL	0.0…500.0 Hz / 0…30000 rpm	0.1 Hz / 1 rpm	0.0 Hz / 0 rpm		

Code	Name	Range	Resolution	Default	User	S
4024	PID SLEEP DELAY	0.0…3600.0 s	0.1 s	60.0 s		
4025	WAKE-UP DEV	Unit and scale defined by par. 4006 and 4007	-	0.0		
4026	WAKE-UP DELAY	0.00…60.00 s	0.01 s	0.50 s		
4027	PID 1 PARAM SET	-6…14	1	0 (SET 1)		
Group 41: PROCESS PID SET 2						
4101	GAIN	0.1…100.0	0.1	1.0		
4102	INTEGRATION TIME	0.0 = NOT SEL, 0.1…3600.0 s	0.1 s	60.0 s		
4103	DERIVATION TIME	0.0…10.0 s	0.1 s	0.0 s		
4104	PID DERIV FILTER	0.0…10.0 s	0.1 s	1.0 s		
4105	ERROR VALUE INV	0 = NO, 1 = YES	1	0 (NO)		
4106	UNITS	0…127	1	4 (%)		
4107	UNIT SCALE	0…4	1	1		
4108	0% VALUE	Unit and scale defined by par. 4106 and 4107	-	0.0		
4109	100% VALUE	Unit and scale defined by par. 4106 and 4107	-	100.0		
4110	SET POINT SEL	0…2, 8…17, 19…20	1	1 (AI1)		✓
4111	INTERNAL SETPNT	Unit and scale defined by par. 4106 and 4107	-	40.0		
4112	SETPOINT MIN	-500.0…500.0%	0.1%	0.0%		
4113	SETPOINT MAX	-500.0…500.0%	0.1%	100.0%		
4114	FBK SEL	1…13	1	1 (ACT1)		
4115	FBK MULTIPLIER	0.000 = NOT SEL, -32.768…32.767	0.001	0.000 (NOT SEL)		
4116	ACT1 INPUT	1…7	1	2 (AI2)		✓
4117	ACT2 INPUT	1…7	1	2 (AI2)		✓
4118	ACT1 MINIMUM	-1000…1000%	1%	0%		
4119	ACT1 MAXIMUM	-1000…1000%	1%	100%		
4120	ACT2 MINIMUM	-1000…1000%	1%	0%		
4121	ACT2 MAXIMUM	-1000…1000%	1%	100%		
4122	SLEEP SELECTION	-6…7	1	0 (NOT SEL)		
4123	PID SLEEP LEVEL	0.0…500.0 Hz / 0…30000 rpm	0.1 Hz / 1 rpm	0.0 Hz / 0 rpm		
4124	PID SLEEP DELAY	0.0…3600.0 s	0.1 s	60.0 s		
4125	WAKE-UP DEV	Unit and scale defined by par. 4106 and 4107	-	0.0		
4126	WAKE-UP DELAY	0.00…60.00 s	0.01 s	0.50 s		
Group 42: EXT / TRIM PID						
4201	GAIN	0.1…100.0	0.1	1.0		
4202	INTEGRATION TIME	0.0 = NOT SEL, 0.1…3600.0 s	0.1 s	60.0 s		
4203	DERIVATION TIME	0.0…10.0 s	0.1 s	0.0 s		
4204	PID DERIV FILTER	0.0…10.0 s	0.1 s	1.0 s		
4205	ERROR VALUE INV	0 = NO, 1 = YES	1	0 (NO)		
4206	UNITS	0…127	1	4 (%)		
4207	UNIT SCALE	0…4	1	1		
4208	0% VALUE	Unit and scale defined by par. 4206 and 4207	-	0.0		

Code	Name	Range	Resolution	Default	User	S
4209	100% VALUE	Unit and scale defined by par. 4206 and 4207	-	100.0		
4210	SET POINT SEL	0…2, 8…17, 19…20	1	1 (AI1)		✓
4211	INTERNAL SETPNT	Unit and scale defined by par. 4206 and 4207	-	40.0		
4212	SETPOINT MIN	-500.0…500.0%	0.1%	0.0%		
4213	SETPOINT MAX	-500.0…500.0%	0.1%	100.0%		
4214	FBK SEL	1…13	1	1 (ACT1)		
4215	FBK MULTIPLIER	0.000 = NOT SEL, -32.768…32.767	0.001	0.000 (NOT SEL)		
4216	ACT1 INPUT	1…7	1	2 (AI2)		✓
4217	ACT2 INPUT	1…7	1	2 (AI2)		✓
4218	ACT1 MINIMUM	-1000…1000%	1%	0%		
4219	ACT1 MAXIMUM	-1000…1000%	1%	100%		
4220	ACT2 MINIMUM	-1000…1000%	1%	0%		
4221	ACT2 MAXIMUM	-1000…1000%	1%	100%		
4228	ACTIVATE	-6…12	1	0 (NOT SEL)		
4229	OFFSET	0.0…100.0%	0.1%	0.0%		
4230	TRIM MODE	0 = NOT SEL, 1 = PROPORTIONAL, 3 = DIRECT	1	0 (NOT SEL)		
4231	TRIM SCALE	-100.0…100.0%	0.1%	0.0%		
4232	CORRECTION SRC	1 = PID2REF, 2 = PID2OUTPUT	1	1 (PID2REF)		
Group 45: ENERGY SAVING						
4502	ENERGY PRICE	0.00…655.35	0.01	0.00		
4507	CO2 CONV FACTOR	0.0…10.0 tn/MWh	0.1 tn/MWh	0.5 tn/MWh		
4508	PUMP POWER	0.0…1000.0%	0.1%	100.0%		
4509	ENERGY RESET	0 = DONE, 1 = RESET	1	0 (DONE)		
Group 50: ENCODER						
5001	PULSE NR	50…16384	1	1024		✓
5002	ENCODER ENABLE	0 = DISABLE, 1 = ENABLE	1	0 (DISABLE)		✓
5003	ENCODER FAULT	1 = FAULT, 2 = ALARM	1	1 (FAULT)		✓
5010	Z PLS ENABLE	0 = DISABLE, 1 = ENABLE	1	0 (DISABLE)		✓
5011	POSITION RESET	0 = DISABLE, 1 = ENABLE	1	0 (DISABLE)		
Group 51: EXT COMM MODULE						
5101	FBA TYPE	-	-	0 (NOT DEFINED)		
5102…5126	FB PAR 2…26	0…65535	1	0		
5127	FBA PAR REFRESH	0 = DONE, 1 = REFRESH	1	0 (DONE)		✓
5128	FILE CPI FW REV	0000…FFFF hex	1	0		
5129	FILE CONFIG ID	0000…FFFF hex	1	0		
5130	FILE CONFIG REV	0000…FFFF hex	1	0		
5131	FBA STATUS	0…6	1	0 (IDLE)		
5132	FBA CPI FW REV	0000…FFFF hex	1	0		
5133	FBA APPL FW REV	0000…FFFF hex	1	0		
Group 52: PANEL COMM						
5201	STATION ID	1…247	1	1		
5202	BAUD RATE	9.6, 19.2, 38.4, 57.6, 115.2 kbits/s	-	9.6 kbits/s		

Code	Name	Range	Resolution	Default	User	S
5203	PARITY	0 = 8 NONE 1, 1 = 8 NONE 2, 2 = 8 EVEN 1, 3 = 8 ODD 1	1	0 (8 NONE 1)		
5204	OK MESSAGES	0…65535	1	-		
5205	PARITY ERRORS	0…65535	1	-		
5206	FRAME ERRORS	0…65535	1	-		
5207	BUFFER OVERRUNS	0…65535	1	-		
5208	CRC ERRORS	0…65535	1	-		
Group 53: EFB PROTOCOL						
5301	EFB PROTOCOL ID	0…0xFFFF	1	0		
5302	EFB STATION ID	0…65535	1	1		✓
5303	EFB BAUD RATE	1.2, 2.4, 4.8, 9.6, 19.2, 38.4, 57.6, 76.8 kbits/s	-	9.6 kbits/s		
5304	EFB PARITY	0 = 8 NONE 1, 1 = 8 NONE 2, 2 = 8 EVEN 1, 3 = 8 ODD 1		0 (8 NONE 1)		
5305	EFB CTRL PROFILE	0 = ABB DRV LIM, 1 = DCU PROFILE, 2 = ABB DRV FULL	1	0 (ABB DRV LIM)		
5306	EFB OK MESSAGES	0…65535	1	0		
5307	EFB CRC ERRORS	0…65535	1	0		
5308	EFB UART ERRORS	0…65535	1	0		
5309	EFB STATUS	0…7	1	0 (IDLE)		
5310	EFB PAR 10	0…65535	1	0		
5311	EFB PAR 11	0…65535	1	0		
5312	EFB PAR 12	0…65535	1	0		
5313	EFB PAR 13	0…65535	1	0		
5314	EFB PAR 14	0…65535	1	0		
5315	EFB PAR 15	0…65535	1	0		
5316	EFB PAR 16	0…65535	1	0		
5317	EFB PAR 17	0…65535	1	0		
5318	EFB PAR 18	0…65535	1	0		
5319	EFB PAR 19	0000…FFFF hex	1	0		
5320	EFB PAR 20	0000…FFFF hex	1	0		
Group 64: LOAD ANALYZER						
6401	PVL SIGNAL	100…178	1	103 (parameter 0103 OUTPUT FREQ)		
6402	PVL FILTER TIME	0.0…120.0 s	0.1 s	0.1 s		
6403	LOGGERS RESET	-6…7	1	0 (NOT SEL)		
6404	AL2 SIGNAL	101…178	1	103 (parameter 0103 OUTPUT FREQ)		
6405	AL2 SIGNAL BASE	-	-	Depends on the signal selected with par. 6404.		
6406	PEAK VALUE	-	-	-		
6407	PEAK TIME 1	Date dd.mm.yy / power-on time in days	1 d	-		
6408	PEAK TIME 2	Time hh.mm.ss	2 s	-		
6409	CURRENT AT PEAK	0.0…6553.5 A	0.1 A	-		
6410	UDC AT PEAK	0…65535 V	1 V	-		
6411	FREQ AT PEAK	0.0…6553.5 Hz	0.1 Hz	-		
6412	TIME OF RESET 1	Date dd.mm.yy / power-on time in days	1 d	-		

Code	Name	Range	Resolution	Default	User	S
6413	TIME OF RESET 2	Time hh.mm.ss	2 s	-		
6414	AL1RANGE0TO10	0.0…100.0%	0.1%	-		
6415	AL1RANGE10TO20	0.0…100.0%	0.1%	-		
6416	AL1RANGE20TO30	0.0…100.0%	0.1%	-		
6417	AL1RANGE30TO40	0.0…100.0%	0.1%	-		
6418	AL1RANGE40TO50	0.0…100.0%	0.1%	-		
6419	AL1RANGE50TO60	0.0…100.0%	0.1%	-		
6420	AL1RANGE60TO70	0.0…100.0%	0.1%	-		
6421	AL1RANGE70TO80	0.0…100.0%	0.1%	-		
6422	AL1RANGE80TO90	0.0…100.0%	0.1%	-		
6423	AL1RANGE90TO	0.0…100.0%	0.1%	-		
6424	AL2RANGE0TO10	0.0…100.0%	0.1%	-		
6425	AL2RANGE10TO20	0.0…100.0%	0.1%	-		
6426	AL2RANGE20TO30	0.0…100.0%	0.1%	-		
6427	AL2RANGE30TO40	0.0…100.0%	0.1%	-		
6428	AL2RANGE40TO50	0.0…100.0%	0.1%	-		
6429	AL2RANGE50TO60	0.0…100.0%	0.1%	-		
6430	AL2RANGE60TO70	0.0…100.0%	0.1%	-		
6431	AL2RANGE70TO80	0.0…100.0%	0.1%	-		
6432	AL2RANGE80TO90	0.0…100.0%	0.1%	-		
6433	AL2RANGE90TO	0.0…100.0%	0.1%	-		
Group 81: PFC CONTROL						
8103	REFERENCE STEP 1	0.0…100.0%	0.1%	0.0%		
8104	REFERENCE STEP 2	0.0…100.0%	0.1%	0.0%		
8105	REFERENCE STEP 3	0.0…100.0%	0.1%	0.0%		
8109	START FREQ 1	0.0…500.0 Hz	0.1 Hz	-01: 50.0 Hz / -U1: 60.0 Hz		
8110	START FREQ 2	0.0…500.0 Hz	0.1 Hz	-01: 50.0 Hz / -U1: 60.0 Hz		
8111	START FREQ 3	0.0…500.0 Hz	0.1 Hz	-01: 50.0 Hz / -U1: 60.0 Hz		
8112	LOW FREQ 1	0.0…500.0 Hz	0.1 Hz	-01: 25.0 Hz / -U1: 30.0 Hz		
8113	LOW FREQ 2	0.0…500.0 Hz	0.1 Hz	-01: 25.0 Hz / -U1: 30.0 Hz		
8114	LOW FREQ 3	0.0…500.0 Hz	0.1 Hz	-01: 25.0 Hz / -U1: 30.0 Hz		
8115	AUX MOT START D	0.0…3600.0 s	0.1 s	5.0 s		
8116	AUX MOT STOP D	0.0…3600.0 s	0.1 s	3.0 s		
8117	NR OF AUX MOT	0…4	1	1		✓
8118	AUTOCHNG INTERV	-0.1 = TEST MODE, 0.0 = NOT SEL, 0.1…336.0 h	0.1 h	0.0 h (NOT SEL)		✓
8119	AUTOCHNG LEVEL	0.0…100.0%	0.1%	50.0%		
8120	INTERLOCKS	0…6	1	4 (DI4)		✓
8121	REG BYPASS CTRL	0 = NO, 1 = YES	1	0 (NO)		
8122	PFC START DELAY	0.00…10.00 s	0.01 s	0.50 s		
8123	PFC ENABLE	0 = NOT SEL, 1 = ACTIVE	1	0 (NOT SEL)		✓

Code	Name	Range	Resolution	Default	User	S
8124	ACC IN AUX STOP	0.0 = NOT SEL, 0.1…1800.0 s	0.1 s	0.0 s (NOT SEL)		
8125	DEC IN AUX START	0.0 = NOT SEL, 0.1…1800.0 s	0.1 s	0.0 s (NOT SEL)		
8126	TMED AUTOCHNG	0…4	1	0 (NOT SEL)		
8127	MOTORS	1…7	1	2		✓
8128	AUX START ORDER	1 = EVEN RUNTIME, 2 = RELAY ORDER	1	1 (EVEN RUNTIME)		✓
Group 98: OPTIONS						
9802	COMM PROT SEL	0 = NOT SEL, 1 = STD MODBUS, 4 = EXT FBA	1	0 (NOT SEL)		✓

Complete parameter descriptions

This section describes the actual signals and parameters for ACS550.

Group 99: START-UP DATA

This group defines special start-up data required to:

- set up the drive
- enter motor information.

Code	Description
9901	**LANGUAGE** Selects the display language. There are two different Assistant Control Panels, each supporting a different language set. (Panel ACS-CP-L supporting languages 0, 2, 11…15 has been integrated into ACS-CP-A.) Assistant Control Panel ACS-CP-A: 0 = ENGLISH; 1 = ENGLISH (AM); 2 = DEUTSCH; 3 = ITALIANO; 4 = ESPAÑOL 5 = PORTUGUES; 6 = NEDERLANDS; 7 = FRANÇAIS; 8 = DANSK; 9 = SUOMI 10 = SVENSKA; 11 = RUSSKI; 12 = POLSKI; 13 = TÜRKÇE; 14 = CZECH 15 = MAGYAR; 16 = ELLINIKA Assistant Control Panel ACS-CP-D (Asia): 0 = ENGLISH; 1 = CHINESE; 2 = KOREAN; 3 = JAPANESE
9902	**APPLIC MACRO** Selects an application macro. Application macros automatically edit parameters to configure the ACS550 for a particular application. 1 = ABB STANDARD; 2 = 3-WIRE; 3 = ALTERNATE; 4 = MOTOR POT; 5 = HAND/AUTO 6 = PID CONTROL; 7 = PFC CONTROL; 8 = TORQUE CTRL; 31 = LOAD FD SET 0 = USER S1 LOAD; -1 = USER S1 SAVE; -2 = USER S2 LOAD; -3 = USER S2 SAVE 31 = LOAD FD SET – FlashDrop parameter values as defined by the FlashDrop file. Parameter view is selected by parameter 1611 PARAMETER VIEW. • FlashDrop is an optional device for fast copying of parameters to unpowered drives. FlashDrop allows easy customization of the parameter list, e.g. selected parameters can be hidden. For more information, see *MFDT-01 FlashDrop User's Manual* (3AFE68591074 [English]). -1 = USER S1 SAVE, -3 = USER S2 SAVE – With these it is possible to save two different user parameter sets into the drive permanent memory for later use. Each set contains parameter settings, including *Group 99: START-UP DATA*, and the results of the motor identification run. 0 = USER S1 LOAD, -2 = USER S2 LOAD – With these the user parameter sets can be taken back in use.
9904	**MOTOR CTRL MODE** Selects the motor control mode. 1 = VECTOR:SPEED – sensorless vector control mode. • Reference 1 is speed reference in rpm. • Reference 2 is speed reference in % (100% is absolute maximum speed, equal to the value of parameter 2002 MAXIMUM SPEED, or 2001 MINIMUM SPEED if the absolute value of the minimum speed is greater than the maximum speed). 2 = VECTOR:TORQ. • Reference 1 is speed reference in rpm. • Reference 2 is torque reference in % (100% is nominal torque.) 3 = SCALAR:FREQ – scalar control mode. • Reference 1 is frequency reference in Hz. • Reference 2 is frequency reference in % (100% is absolute maximum frequency, equal to the value of parameter 2008 MAXIMUM FREQ, or 2007 MINIMUM FREQ if the absolute value of the minimum speed is greater than the maximum speed).

Code	Description
9905	**MOTOR NOM VOLT** Defines the nominal motor voltage. • Must equal the value on the motor rating plate. • The ACS550 cannot supply the motor with a voltage greater than the input power (mains) voltage.
9906	**MOTOR NOM CURR** Defines the nominal motor current. • Must equal the value on the motor rating plate. • Range allowed: 0.2…2.0 · I_{2hd} (where I_{2hd} is drive current).
9907	**MOTOR NOM FREQ** Defines the nominal motor frequency. • Range: 10…500 Hz (typically 50 or 60 Hz) • Sets the frequency at which output voltage equals the MOTOR NOM VOLT. • Field weakening point = Nom Freq · Supply Volt / Mot Nom Volt
9908	**MOTOR NOM SPEED** Defines the nominal motor speed. • Must equal the value on the motor rating plate.
9909	**MOTOR NOM POWER** Defines the nominal motor power. • Must equal the value on the motor rating plate.
9910	**ID RUN** This parameter controls a self-calibration process called the Motor ID Run. During this process, the drive operates the motor (motor rotating) and makes measurements in order to identify motor characteristics and create a model used for internal calculations. An ID Run is especially effective when: • vector control mode is used [parameter *9904* = 1 (VECTOR:SPEED) or 2 (VECTOR:TORQ)], and/or • operation point is near zero speed, and/or • operation requires a torque range above the motor nominal torque, over a wide speed range, and without any measured speed feedback (i.e. without a pulse encoder). 0 = OFF/IDMAGN – The Motor ID Run process is not run. Identification magnetization is performed, depending on parameter 9904 and 2101 settings. In identification magnetization, the motor model is calculated at first start by magnetizing the motor for 10 to 15 s at zero speed (motor not rotating). The model is recalculated always at start after motor parameter changes. • Parameter *9904* = 1 (VECTOR:SPEED) or 2 (VECTOR:TORQ): Identification magnetization is performed. • Parameter *9904* = 3 (SCALAR:FREQ) and parameter *2101* = 3 (SCALAR FLYST) or 5 (FLY + BOOST): Identification magnetization is performed. • Parameter *9904* = 3 (SCALAR:FREQ) and parameter *2101* has other value than 3 (SCALAR FLYST) or 5 (FLY + BOOST): Identification magnetization is not performed. 1 = ON – Enables the Motor ID Run, during which the motor is rotating, at the next start command. After run completion, this value automatically changes to 0. **Note:** The motor must be de-coupled from the driven equipment. **Note:** If motor parameters are changed after ID Run, repeat the ID Run. ⚠ **WARNING!** The motor will run at up to approximately 50…80% of the nominal speed during the ID Run. The motor will rotate in the forward direction. **Ensure that it is safe to run the motor before performing the ID Run!** See also section *How to perform the ID Run* on page *41*.
9915	**MOTOR COSPHI** Defines the nominal motor cos phi (power factor). The parameter improves performance especially with high efficiency motors. 0 = IDENTIFIED – Drive identifies the cos phi automatically by estimation. 0.01…0.97 – Value entered used as the cos phi.

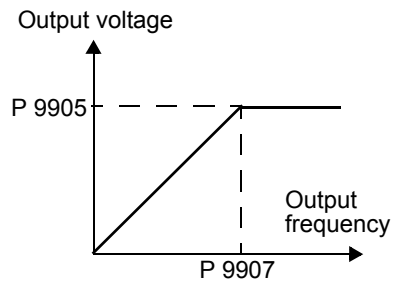

Group 01: OPERATING DATA

This group contains drive operating data, including actual signals. The drive sets the values for actual signals, based on measurements or calculations. You cannot set these values.

Code	Description
0101	**SPEED & DIR** The calculated signed speed of the motor (rpm). The absolute value of 0101 SPEED & DIR is the same as the value of 0102 SPEED. • The value of 0101 SPEED & DIR is positive if the motor runs in the forward direction. • The value of 0101 SPEED & DIR is negative if the motor runs in the reverse direction.
0102	**SPEED** The calculated speed of the motor (rpm). (Parameter 0102 or 0103 is shown by default in the control panel Output mode.)
0103	**OUTPUT FREQ** The frequency (Hz) applied to the motor. (Parameter 0102 or 0103 is shown by default in the control panel Output mode.)
0104	**CURRENT** The motor current, as measured by the ACS550. (Shown by default in the control panel Output mode.)
0105	**TORQUE** Output torque. Calculated value of torque on motor shaft in % of motor nominal torque. (Shown by default in the control panel Output mode.)
0106	**POWER** The measured motor power in kW.
0107	**DC BUS VOLTAGE** The DC bus voltage in V DC, as measured by the ACS550.
0109	**OUTPUT VOLTAGE** The voltage applied to the motor.
0110	**DRIVE TEMP** The temperature of the drive power transistors in degrees Celsius.
0111	**EXTERNAL REF 1** External reference, REF1, in rpm or Hz – units determined by parameter 9904.
0112	**EXTERNAL REF 2** External reference, REF2, in %.
0113	**CTRL LOCATION** Active control location. Alternatives are: 0 = LOCAL 1 = EXT1 2 = EXT2
0114	**RUN TIME (R)** The drive's accumulated running time in hours (h). • Can be **reset** by pressing UP and DOWN keys simultaneously when the control panel is in the Parameters mode.
0115	**KWH COUNTER (R)** The drive's accumulated power consumption in kilowatt hours. • The counter value is accumulated till it reaches 65535 after which the counter rolls over and starts again from 0. • Can be **reset** by pressing UP and DOWN keys simultaneously when the control panel is in the Parameters mode.
0116	**APPL BLK OUTPUT** Application block output signal. Value is from either: • PFC control, if PFC Control is active, or • Parameter 0112 EXTERNAL REF 2.

Code	Description
0118	**DI 1-3 STATUS** Status of the three digital inputs. • Status is displayed as a binary number. • 1 indicates that the input is activated. • 0 indicates that the input is deactivated.
0119	**DI 4-6 STATUS** Status of the three digital inputs. • See parameter 0118 DI 1-3 STATUS.
0120	**AI 1** The relative value of analog input 1 in %.
0121	**AI 2** The relative value of analog input 2 in %.
0122	**RO 1-3 STATUS** Status of the three relay outputs. • 1 indicates that the relay is energized. • 0 indicates that the relay is de-energized.
0123	**RO 4-6 STATUS** Status of the three relay outputs. Available if OREL-01 Relay Output Extension Module is installed. • See parameter 0122.
0124	**AO 1** The analog output 1 value in milliamperes.
0125	**AO 2** The analog output 2 value in milliamperes.
0126	**PID 1 OUTPUT** The PID controller 1 output value in %.
0127	**PID 2 OUTPUT** The PID controller 2 output value in %.
0128	**PID 1 SETPNT** The PID 1 controller setpoint signal. • Units and scale defined by PID parameters.
0129	**PID 2 SETPNT** The PID 2 controller setpoint signal. • Units and scale defined by PID parameters.
0130	**PID 1 FBK** The PID 1 controller feedback signal. • Units and scale defined by PID parameters.
0131	**PID 2 FBK** The PID 2 controller feedback signal. • Units and scale defined by PID parameters.
0132	**PID 1 DEVIATION** The difference between the PID 1 controller reference value and actual value. • Units and scale defined by PID parameters.
0133	**PID 2 DEVIATION** The difference between the PID 2 controller reference value and actual value. • Units and scale defined by PID parameters.
0134	**COMM RO WORD** Free data location that can be written from serial link. • Used for relay output control. • See parameter 1401.
0135	**COMM VALUE 1** Free data location that can be written from serial link.

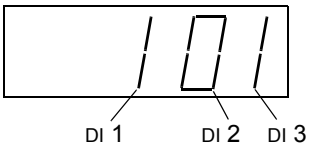

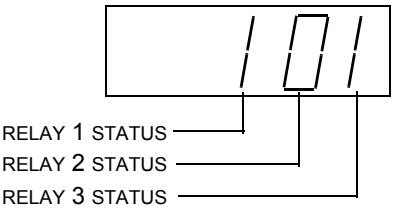

Code	Description
0136	**COMM VALUE 2** Free data location that can be written from serial link.
0137	**PROCESS VAR 1** Process variable 1 • Defined by parameters in *Group 34: PANEL DISPLAY*.
0138	**PROCESS VAR 2** Process variable 2 • Defined by parameters in *Group 34: PANEL DISPLAY*.
0139	**PROCESS VAR 3** Process variable 3 • Defined by parameters in *Group 34: PANEL DISPLAY*.
0140	**RUN TIME** The drive's accumulated running time in thousands of hours (kh). • Cannot be reset.
0141	**MWH COUNTER** The drive's accumulated power consumption in megawatt hours. • The counter value is accumulated till it reaches 65535 after which the counter rolls over and starts again from 0. • Cannot be reset.
0142	**REVOLUTION CNTR** The motor's accumulated revolutions in millions of revolutions. • Can be reset by pressing UP and DOWN keys simultaneously when the control panel is in the Parameters mode.
0143	**DRIVE ON TIME HI** The drive's accumulated power-on time in days. • Cannot be reset.
0144	**DRIVE ON TIME LO** The drive's accumulated power-on time in 2 second ticks (30 ticks = 60 seconds). • Shown in format hh.mm.ss. • Cannot be reset.
0145	**MOTOR TEMP** Motor temperature in degrees Celsius / PTC resistance in ohms. • Applies only if motor temperature sensor is set up. • See parameter 3501.
0146	**MECH ANGLE** Defines the motor shaft's angular position to about 0.01° (32,768 divisions for 360°). The position is defined as 0 at power up. During operation the zero position can be set by: • a Z-pulse input, if parameter 5010 Z PLS ENABLE = 1 (ENABLE) • parameter 5011 POSITION RESET, if parameter 5010 Z PLS ENABLE = 2 (DISABLE) • any status change of parameter 5002 ENCODER ENABLE.
0147	**MECH REVS** A signed integer that counts full revolutions of the motor shaft. The value: • increments when parameter 0146 MECH ANGLE changes from 32767 to 0 • decrements when parameter 0146 MECH ANGLE changes from 0 to 32767.
0148	**Z PLS DETECTED** Encoder zero pulse detector. When a Z-pulse defines the zero position, the shaft must pass through the zero position to trigger a Z-pulse. Until then, the shaft position is unknown (the drive uses the shaft position at power up as zero). This parameter signals when parameter 0146 MECH ANGLE is valid. The parameter starts at 0 = NOT DETECTED on power-up and changes to 1 = DETECTED only if: • parameter 5010 Z PLS ENABLE = 1 (ENABLE) and • an encoder Z-pulse has been detected.
0150	**CB TEMP** Temperature of the drive control board in degrees Celsius. **Note:** Some drives have a control board (OMIO) that does not support this feature. These drives always show the constant value of 25.0 °C.

Code	Description
0153	**MOT THERM STRESS** Estimated rise of the motor temperature. Value equals to the estimated motor thermal stress as a percentage of the motor temperature trip level.
0158	**PID COMM VALUE 1** Data received from fieldbus for PID control (PID1 and PID2).
0159	**PID COMM VALUE 2** Data received from fieldbus for PID control (PID1 and PID2).
0174	**SAVED KWH** Energy saved in kWh compared to the energy used when the pump is connected directly to the supply. See the note on page *176*. • The counter value is accumulated till it reaches 999.9 after which the counter rolls over and starts again from 0.0. • Can be reset with parameter 4509 ENERGY RESET (resets all energy calculators at the same time). • See *Group 45: ENERGY SAVING*.
0175	**SAVED MWH** Energy saved in MWh compared to the energy used when the pump is connected directly to the supply. See the note on page *176*. • The counter value is accumulated till it reaches 65535 after which the counter rolls over and starts again from 0. • Can be reset with parameter 4509 ENERGY RESET (resets all energy calculators at the same time). • See *Group 45: ENERGY SAVING*.
0176	**SAVED AMOUNT 1** Energy saved in local currency (remainder when the total saved energy is divided by 1000). See the note on page *176*. • To find out the total saved energy in currency units, add the value of parameter 0177 multiplied by 1000 to the value of parameter 0176. **Example:** 0176 SAVED AMOUNT 1 = 123.4 0177 SAVED AMOUNT 2 = 5 Total saved energy = 5 · 1000 + 123.4 = 5123.4 currency units. • The counter value is accumulated till it reaches 999.9 (the counter does not roll over). • Can be reset with parameter 4509 ENERGY RESET (resets all energy calculators at the same time). • Local energy price is set with parameter 4502 ENERGY PRICE. • See *Group 45: ENERGY SAVING*.
0177	**SAVED AMOUNT 2** Energy saved in local currency in thousand currency units. Eg value 5 means 5000 currency units. See the note on page *176*. • The counter value is accumulated till it reaches 65535 (the counter does not roll over). • See parameter 0176 SAVED AMOUNT 1.
0178	**SAVED CO2** Reduction on carbon dioxide emissions in tn. See the note on page *176*. • The counter value is accumulated till it reaches 6553.5 (the counter does not roll over). • Can be reset with parameter 4509 ENERGY RESET (resets all energy calculators at the same time). • CO2 conversion factor is set with parameter 4507 CO2 CONV FACTOR. • See *Group 45: ENERGY SAVING*.

Group 03: FB ACTUAL SIGNALS

This group monitors fieldbus communications.

Code	Description
0301	**FB CMD WORD 1** Read-only copy of the Fieldbus Command Word 1. • The fieldbus command is the principal means for controlling the drive from a fieldbus controller. The command consists of two Command Words. Bit-coded instructions in the Command Words switch the drive between states. • To control the drive, using the Command Words, an external location (EXT1 or EXT2) must be active and set to COMM. (See parameters 1001 and 1002.) • The control panel displays the word in hex. For example, all zeros and a 1 in Bit 0 displays as 0001. All zeros and a 1 in Bit 15 displays as 8000.
0302	**FB CMD WORD 2** Read-only copy of the Fieldbus Command Word 2. • See parameter 0301.

Bit #	0301, FB CMD WORD 1	0302, FB CMD WORD 2
0	STOP	FBLOCAL_CTL
1	START	FBLOCAL_REF
2	REVERSE	START_DISABLE1
3	LOCAL	START_DISABLE2
4	RESET	Reserved
5	EXT2	Reserved
6	RUN_DISABLE	Reserved
7	STPMODE_R	Reserved
8	STPMODE_EM	Reserved
9	STPMODE_C	Reserved
10	RAMP_2	Reserved
11	RAMP_OUT_0	REF_CONST
12	RAMP_HOLD	REF_AVE
13	RAMP_IN_0	LINK_ON
14	RREQ_LOCALLOC	REQ_STARTINH
15	TORQLIM2	OFF_INTERLOCK

Code	Description
0303	**FB STS WORD 1** Read-only copy of the Status Word 1. • The drive sends status information to the fieldbus controller. The status consists of two Status Words. • The control panel displays the word in hex. For example, all zeros and a 1 in Bit 0 displays as 0001. All zeros and a 1 in Bit 15 displays as 8000.
0304	**FB STS WORD 2** Read-only copy of the Status Word 2. • See parameter 0303.

Bit #	0303, FB STS WORD 1	0304, FB STS WORD 2
0	READY	ALARM
1	ENABLED	NOTICE
2	STARTED	DIRLOCK
3	RUNNING	LOCALLOCK
4	ZERO_SPEED	CTL_MODE
5	ACCELERATE	Reserved
6	DECELERATE	Reserved
7	AT_SETPOINT	CPY_CTL
8	LIMIT	CPY_REF1
9	SUPERVISION	CPY_REF2
10	REV_REF	REQ_CTL
11	REV_ACT	REQ_REF1
12	PANEL_LOCAL	REQ_REF2
13	FIELDBUS_LOCAL	REQ_REF2EXT
14	EXT2_ACT	ACK_STARTINH
15	FAULT	ACK_OFF_ILCK

Code	Description
0305	**FAULT WORD 1** Read-only copy of the Fault Word 1. • When a fault is active, the corresponding bit for the active fault is set in the Fault Words. • Each fault has a dedicated bit allocated within Fault Words. • See section *Fault listing* on page *254* for a description of the faults. • The control panel displays the word in hex. For example, all zeros and a 1 in Bit 0 displays as 0001. All zeros and a 1 in Bit 15 displays as 8000.
0306	**FAULT WORD 2** Read-only copy of the Fault Word 2. • See parameter 0305.
0307	**FAULT WORD 3** Read-only copy of the Fault Word 3. • See parameter 0305.

Bit #	0305, FAULT WORD 1	0306, FAULT WORD 2	0307, FAULT WORD 3
0	OVERCURRENT	Obsolete	EFB 1
1	DC OVERVOLT	THERM FAIL	EFB 2
2	DEV OVERTEMP	OPEX LINK	EFB 3
3	SHORT CIRC	OPEX PWR	INCOMPATIBLE SW
4	Reserved	CURR MEAS	USER LOAD CURVE
5	DC UNDERVOLT	SUPPLY PHASE	Reserved
6	AI1 LOSS	ENCODER ERR	Reserved
7	AI2 LOSS	OVERSPEED	Reserved
8	MOT OVERTEMP	Reserved	Reserved
9	PANEL LOSS	DRIVE ID	Reserved
10	ID RUN FAIL	CONFIG FILE	System error
11	MOTOR STALL	SERIAL 1 ERR	System error
12	CB OVERTEMP	EFB CON FILE	System error
13	EXT FAULT 1	FORCE TRIP	System error
14	EXT FAULT 2	MOTOR PHASE	System error
15	EARTH FAULT	OUTP WIRING	Param. setting fault

Code	Description
0308	**ALARM WORD 1** • When an alarm is active, the corresponding bit for the active alarm is set in the Alarm Words. • Each alarm has a dedicated bit allocated within Alarm Words. • Bits remain set until the whole alarm word is reset. (Reset by writing zero to the word.) • The control panel displays the word in hex. For example, all zeros and a 1 in Bit 0 displays as 0001. All zeros and a 1 in Bit 15 displays as 8000.
0309	**ALARM WORD 2** See parameter 0308.

Bit #	0308, ALARM WORD 1	0309, ALARM WORD 2
0	OVERCURRENT	Reserved
1	OVERVOLTAGE	PID SLEEP
2	UNDERVOLTAGE	ID RUN
3	DIR LOCK	Reserved
4	IO COMM	START ENABLE 1 MISSING
5	AI1 LOSS	START ENABLE 2 MISSING
6	AI2 LOSS	EMERGENCY STOP
7	PANEL LOSS	ENCODER ERROR
8	DEVICE OVERTEMP	FIRST START
9	MOTOR TEMP	Reserved
10	Reserved	USER LOAD CURVE
11	MOTOR STALL	START DELAY
12	AUTORESET	Reserved
13	AUTOCHANGE	Reserved
14	PFC I LOCK	Reserved
15	Reserved	Reserved

Group 04: FAULT HISTORY

This group stores a recent history of the faults reported by the drive.

Code	Description
0401	**LAST FAULT** 0 – Clear the fault history (on panel = NO RECORD). n – Fault code of the last recorded fault. The fault code is displayed as a name. See section *Fault listing* on page *254* for the fault codes and names. The fault name shown for this parameter may be shorter than the corresponding name in the fault listing, which shows the names as they are shown in the fault display.
0402	**FAULT TIME 1** The day on which the last fault occurred. Either as: • A date – if real time clock is operating. • The number of days after power on – if real time clock is not used, or was not set.
0403	**FAULT TIME 2** The time at which the last fault occurred. Either as: • Real time, in format hh:mm:ss – if real time clock is operating. • The time since power on (minus the whole days reported in 0402), in format hh:mm:ss – if real time clock is not used, or was not set. • Format on the Basic Control Panel: The time since power on in 2-second ticks (minus the whole days reported in 0402). 30 ticks = 60 seconds. E.g. Value 514 equals 17 minutes and 8 seconds (= 514/30).
0404	**SPEED AT FLT** The motor speed (rpm) at the time the last fault occurred.
0405	**FREQ AT FLT** The frequency (Hz) at the time the last fault occurred.
0406	**VOLTAGE AT FLT** The DC bus voltage (V) at the time the last fault occurred.
0407	**CURRENT AT FLT** The motor current (A) at the time the last fault occurred.
0408	**TORQUE AT FLT** The motor torque (%) at the time the last fault occurred.
0409	**STATUS AT FLT** The drive status (hex code word) at the time the last fault occurred.
0410	**DI 1-3 AT FLT** The status of digital inputs 1…3 at the time the last fault occurred.
0411	**DI 4-6 AT FLT** The status of digital inputs 4…6 at the time the last fault occurred.
0412	**PREVIOUS FAULT 1** Fault code of the second last fault. Read-only.
0413	**PREVIOUS FAULT 2** Fault code of the third last fault. Read-only.

Group 10: START/STOP/DIR

This group:

- defines external sources (EXT1 and EXT2) for commands that enable start, stop and direction changes
- locks direction or enables direction control.

To select between the two external locations use the next group (parameter 1102).

Code	Description
1001	**EXT1 COMMANDS** Defines external control location 1 (EXT1) – the configuration of start, stop and direction commands. 0 = NOT SEL – No external start, stop and direction command source. 1 = DI1 – Two-wire Start/Stop. • Start/Stop is through digital input DI1 (DI1 activated = Start; DI1 de-activated = Stop). • Parameter 1003 defines the direction. Selecting 1003 = 3 (REQUEST) is the same as 1003 = 1 (FORWARD). 2 = DI1,2 – Two-wire Start/Stop, Direction. • Start/Stop is through digital input DI1 (DI1 activated = Start; DI1 de-activated = Stop). • Direction control [requires parameter 1003 = 3 (REQUEST)] is through digital input DI2 (DI2 activated = Reverse; de-activated = Forward). 3 = DI1P,2P – Three-wire Start/Stop. • Start/Stop commands are through momentary push-buttons (the P stands for "pulse"). • Start is through a normally open push-button connected to digital input DI1. In order to start the drive, the digital input DI2 must be activated prior to the pulse in DI1. • Connect multiple Start push-buttons in parallel. • Stop is through a normally closed push-button connected to digital input DI2. • Connect multiple Stop push-buttons in series. • Parameter 1003 defines the direction. Selecting 1003 = 3 (REQUEST) is the same as 1003 = 1 (FORWARD). 4 = DI1P,2P,3 – Three-wire Start/Stop, Direction. • Start/Stop commands are through momentary push-buttons, as described for DI1P,2P. • Direction control [requires parameter 1003 = 3 (REQUEST)] is through digital input DI3 (DI3 activated = Reverse; de-activated = Forward). 5 = DI1P,2P,3P – Start Forward, Start Reverse and Stop. • Start and Direction commands are given simultaneously with two separate momentary push-buttons (the P stands for "pulse"). • Start Forward command is through a normally open push-button connected to digital input DI1. In order to start the drive, the digital input DI3 must be activated prior to the pulse in DI1. • Start Reverse command is through a normally open push-button connected to digital input DI2. In order to start the drive, the digital input DI3 must be activated during the pulse in DI2. • Connect multiple Start push-buttons in parallel. • Stop is through a normally closed push-button connected to digital input DI3. • Connect multiple Stop push-buttons in series. • Requires parameter 1003 = 3 (REQUEST). 6 = DI6 – Two-wire Start/Stop. • Start/Stop is through digital input DI6 (DI6 activated = Start; DI6 de-activated = Stop). • Parameter 1003 defines the direction. Selecting 1003 = 3 (REQUEST) is the same as 1003 = 1 (FORWARD). 7 = DI6,5 – Two-wire Start/Stop/Direction. • Start/Stop is through digital input DI6 (DI6 activated = Start; DI6 de-activated = Stop). • Direction control [requires parameter 1003 = 3 (REQUEST)] is through digital input DI5. (DI5 activated = Reverse; de-activated = Forward). 8 = KEYPAD – Control Panel. • Start/Stop and Direction commands are through the control panel when EXT1 is active. • Direction control requires parameter 1003 = 3 (REQUEST). 9 = DI1F,2R – Start/Stop/Direction commands through DI1 and DI2 combinations. • Start forward = DI1 activated and DI2 de-activated. • Start reverse = DI1 de-activated and DI2 activated. • Stop = both DI1 and DI2 activated, or both de-activated. • Requires parameter 1003 = 3 (REQUEST). 10 = COMM – Assigns the fieldbus Command Word as the source for the start/stop and direction commands. • Bits 0,1, 2 of Command Word 1 (parameter 0301) activates the start/stop and direction commands. • See Fieldbus user's manual for detailed instructions.

Code	Description
	11 = TIMED FUNC 1. – Assigns Start/Stop control to Timed Function 1 (Timed Function activated = START; Timed Function de-activated = STOP). See *Group 36: TIMED FUNCTIONS*. 12…14 = TIMED FUNC 2…4 – Assigns Start/Stop control to Timed Function 2…4. See TIMED FUNC 1 above.
1002	**EXT2 COMMANDS** Defines external control location 2 (EXT2) – the configuration of start, stop and direction commands. • See parameter 1001 EXT1 COMMANDS above.
1003	**DIRECTION** Defines the control of motor rotation direction. 1 = FORWARD – Rotation is fixed in the forward direction. 2 = REVERSE – Rotation is fixed in the reverse direction. 3 = REQUEST – Rotation direction can be changed on command.
1004	**JOGGING SEL** Defines the signal that activates the jogging function. Jogging uses Constant Speed 7 (parameter 1208) for speed reference and ramp pair 2 (parameters 2205 and 2206) for accelerating and decelerating. When the jogging activation signal is lost, the drive uses ramp stop to decelerate to zero speed, even if coast stop is used in normal operation (parameter 2102). The jogging status can be parameterized to relay outputs (parameter 1401). The jogging status is also seen in DCU Profile status bit 21. 0 = NOT SEL – Disables the jogging function. 1 = DI1 – Activates/de-activates jogging based on the state of DI1 (DI1 activated = jogging active; DI1 de-activated = jogging inactive). 2…6 = DI2…DI6 – Activates jogging based on the state of the selected digital input. See DI1 above. -1 = DI1(INV) – Activates jogging based on the state of DI1 (DI1 activated = jogging inactive; DI1 de-activated = jogging active). -2…-6 = DI2(INV)…DI6(INV) – Activates jogging based on the state of the selected digital input. See DI1(INV) above.

Group 11: REFERENCE SELECT

This group defines:

- how the drive selects between command sources
- characteristics and sources for REF1 and REF2.

Code	Description
1101	**KEYPAD REF SEL** Selects the reference controlled in local control mode. 1 = REF1(Hz/rpm) – Reference type depends on parameter 9904 MOTOR CTRL MODE. • Speed reference (rpm) if 9904 = 1 (VECTOR:SPEED) or 2 (VECTOR:TORQ). • Frequency reference (Hz) if 9904 = 3 (SCALAR:FREQ). 2 = REF2(%)
1102	**EXT1/EXT2 SEL** Defines the source for selecting between the two external control locations EXT1 or EXT2. Thus, defines the source for Start/Stop/Direction commands and reference signals. 0 = EXT1 – Selects external control location 1 (EXT1). • See parameter 1001 EXT1 COMMANDS for EXT1's Start/Stop/Dir definitions. • See parameter 1103 REF1 SELECT for EXT1's reference definitions. 1 = DI1 – Assigns control to EXT1 or EXT2 based on the state of DI1 (DI1 activated = EXT2; DI1 de-activated = EXT1). 2…6 = DI2…DI6 – Assigns control to EXT1 or EXT2 based on the state of the selected digital input. See DI1 above. 7 = EXT2 – Selects external control location 2 (EXT2). • See parameter 1002 EXT2 COMMANDS for EXT2's Start/Stop/Dir definitions. • See parameter 1106 REF2 SELECT for EXT2's reference definitions. 8 = COMM – Assigns control of the drive via external control location EXT1 or EXT2 based on the fieldbus control word. • Bit 5 of the Command Word 1 (parameter 0301) defines the active external control location (EXT1 or EXT2). • See Fieldbus user's manual for detailed instructions. 9 = TIMED FUNC 1 – Assigns control to EXT1 or EXT2 based on the state of the Timed Function (Timed Function activated = EXT2; Timed Function de-activated = EXT1). See *Group 36: TIMED FUNCTIONS*. 10…12 = TIMED FUNC 2…4 – Assigns control to EXT1 or EXT2 based on the state of the Timed Function. See TIMED FUNC 1 above. -1 = DI1(INV) – Assigns control to EXT1 or EXT2 based on the state of DI1 (DI1 activated = EXT1; DI1 de-activated = EXT2). -2…-6 = DI2(INV)…DI6(INV) – Assigns control to EXT1 or EXT2 based on the state of the selected digital input. See DI1(INV) above.
1103	**REF1 SELECT** Selects the signal source for external reference REF1. 0 = KEYPAD – Defines the control panel as the reference source. 1 = AI1 – Defines analog input 1 (AI1) as the reference source. 2 = AI2 – Defines analog input 2 (AI2) as the reference source. 3 = AI1/JOYST – Defines analog input 1 (AI1), configured for joystick operation, as the reference source. • The minimum input signal runs the drive at the maximum reference in the reverse direction. Define the minimum using parameter 1104. • The maximum input signal runs the drive at maximum reference in the forward direction. Define the maximum using parameter 1105. • Requires parameter 1003 = 3 (REQUEST). 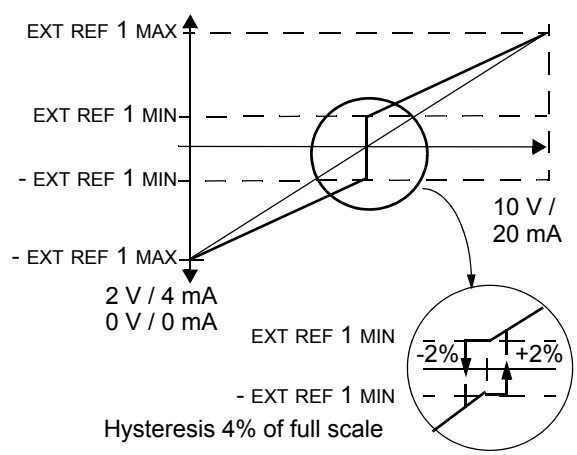 ⚠ **WARNING!** Because the low end of the reference range commands full reverse operation, do not use 0 V as the lower end of the reference range. Doing so means that if the control signal is lost (which is a 0 V input) the result is full reverse operation. Instead, use the following set-up so that loss of the analog input triggers a fault, stopping the drive: • Set parameter 1301 MINIMUM AI1 (1304 MINIMUM AI2) at 20% (2 V or 4 mA). • Set parameter 3021 AI1 FAULT LIMIT to a value 5% or higher. • Set parameter 3001 AI<MIN FUNCTION to 1 (FAULT). 4 = AI2/JOYST – Defines analog input 2 (AI2), configured for joystick operation, as the reference source. • See above (AI1/JOYST) description.

Code	Description
	5 = DI3U,4D(R) – Defines digital inputs as the speed reference source (motor potentiometer control). • Digital input DI3 increases the speed (the U stands for "up"). • Digital input DI4 decreases the speed (the D stands for "down"). • A Stop command resets the reference to zero (the R stands for "reset"). • Parameter 2205 ACCELER TIME 2 controls the reference signal's rate of change. 6 = DI3U,4D – Same as above (DI3U,4D(R)), except: • A Stop command does not reset the reference to zero. The reference is stored. • When the drive restarts, the motor ramps up (at the selected acceleration rate) to the stored reference. 7 = DI5U,6D – Same as above (DI3U,4D), except that DI5 and DI6 are the digital inputs used. 8 = COMM – Defines the fieldbus as the reference source. 9 = COMM+AI1 – Defines a fieldbus and analog input 1 (AI1) combination as the reference source. See Analog input reference correction below. 10 = COMM*AI1 – Defines a fieldbus and analog input 1 (AI1) combination as the reference source. See Analog input reference correction below. 11 = DI3U,4D(RNC) – Same as DI3U,4D(R) above, except that: • Changing the control source (EXT1 to EXT2, EXT2 to EXT1, LOC to REM) does not copy the reference. 12 = DI3U,4D(NC) – Same as DI3U,4D above, except that: • Changing the control source (EXT1 to EXT2, EXT2 to EXT1, LOC to REM) does not copy the reference. 13 = DI5U,6D(NC) – Same as DI5U,6D above, except that: • Changing the control source (EXT1 to EXT2, EXT2 to EXT1, LOC to REM) does not copy the reference. 14 = AI1+AI2 – Defines an analog input 1 (AI1) and analog input 2 (AI2) combination as the reference source. See Analog input reference correction below. 15 = AI1*AI2 – Defines an analog input 1 (AI1) and analog input 2 (AI2) combination as the reference source. See Analog input reference correction below. 16 = AI1-AI2 – Defines an analog input 1 (AI1) and analog input 2 (AI2) combination as the reference source. See Analog input reference correction below. 17 = AI1/AI2 – Defines an analog input 1 (AI1) and analog input 2 (AI2) combination as the reference source. See Analog input reference correction below. 20 = KEYPAD(RNC) – Defines the control panel as the reference source. • A Stop command resets the reference to zero (the R stands for reset.). • Changing the control source (EXT1 to EXT2, EXT2 to EXT1) does not copy the reference. 21 = KEYPAD(NC) – Defines the control panel as the reference source. • A Stop command does not reset the reference to zero. The reference is stored. • Changing the control source (EXT1 to EXT2, EXT2 to EXT1) does not copy the reference.
	Analog input reference correction Parameter values 9, 10 and 14…17 use the formula in the following table. Where: • C = Main reference value (= COMM for values 9, 10 and = AI1 for values 14…17). • B = Correcting reference (= AI1 for values 9, 10 and = AI2 for values 14…17). **Example:** The figure shows the reference source curves for value settings 9, 10 and 14…17, where: • C = 25%. • P 4012 SETPOINT MIN = 0. • P 4013 SETPOINT MAX = 0. • B varies along the horizontal axis.

Value setting	Calculation of the AI reference
C + B	C value + (B value - 50% of reference value)
C * B	C value · (B value / 50% of reference value)
C - B	(C value + 50% of reference value) - B value
C / B	(C value · 50% of reference value) / B value

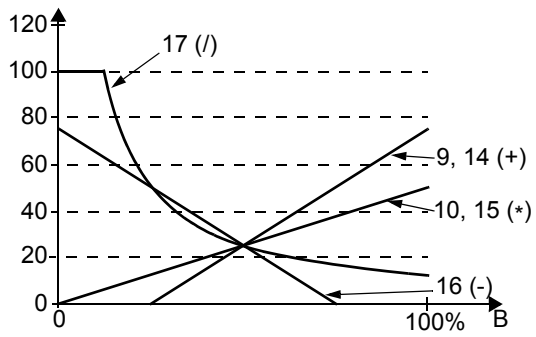

Code	Description
1104	**REF1 MIN** Sets the minimum for external reference 1. • The minimum analog input signal (as a percent of the full signal in volts or amperes) corresponds to REF1 MIN in Hz/rpm. • Parameter 1301 MINIMUM AI1 or 1304 MINIMUM AI2 sets the minimum analog input signal. • These parameters (reference and analog min. and max. settings) provide scale and offset adjustment for the reference.
1105	**REF1 MAX** Sets the maximum for external reference 1. • The maximum analog input signal (as a percent of full the signal in volts or amperes) corresponds to REF1 MAX in Hz/rpm. • Parameter 1302 MAXIMUM AI1 or 1305 MAXIMUM AI2 sets the maximum analog input signal.

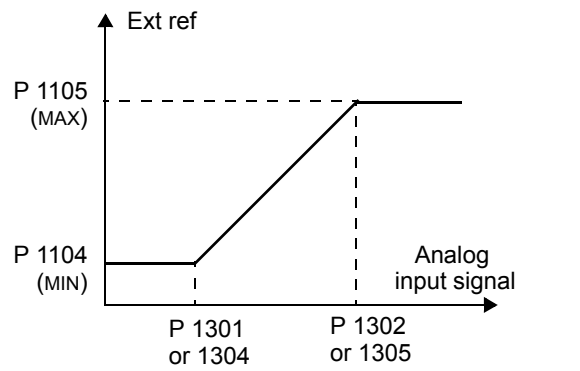

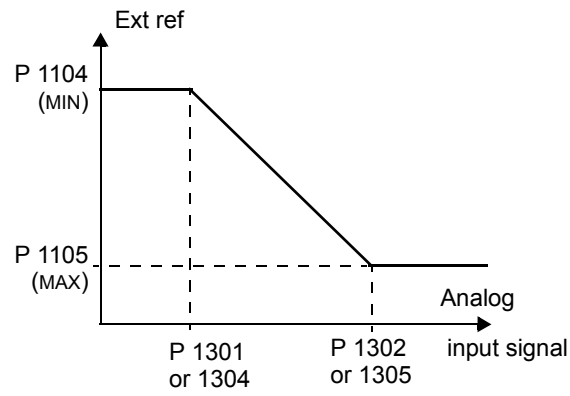

1106	**REF2 SELECT** Selects the signal source for external reference REF2. 0…17 – Same as for parameter 1103 REF1 SELECT. 19 = PID1OUT – The reference is taken from the PID1 output. See *Group 40: PROCESS PID SET 1* and *Group 41: PROCESS PID SET 2*. 20…21 – Same as for parameter 1103 REF1 SELECT.

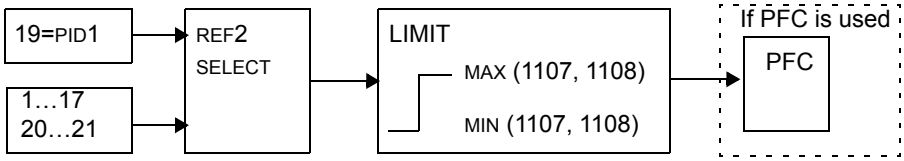

1107	**REF2 MIN** Sets the minimum for external reference 2. • The minimum analog input signal (in volts or amperes) corresponds to REF2 MIN in %. • Parameter 1301 MINIMUM AI1 or 1304 MINIMUM AI2 sets the minimum analog input signal. • This parameter sets the minimum frequency reference. • The value is a percentage of the: – maximum frequency or speed – maximum process reference – nominal torque.
1108	**REF2 MAX** Sets the maximum for external reference 2. • The maximum analog input signal (in volts or amperes) corresponds to REF2 MAX in %. • Parameter 1302 MAXIMUM AI1 or 1305 MAXIMUM AI2 sets the maximum analog input signal. • This parameter sets the maximum frequency reference. • The value is a percentage of the: – maximum frequency or speed – maximum process reference – nominal torque.

Group 12: CONSTANT SPEEDS

This group defines a set of constant speeds. In general:

- You can program up to 7 constant speeds, ranging from 0...500 Hz or 0...30000 rpm.
- Values must be positive (No negative speed values for constant speeds).
- Constant speed selections are ignored if:
  - the torque control is active, or
  - the process PID reference is followed, or
  - the drive is in local control mode, or
  - PFC (Pump-Fan Control) is active.

Note: Parameter 1208 CONST SPEED 7 acts also as a so-called fault speed which may be activated if the control signal is lost. For example, see parameters 3001 AI<MIN FUNCTION, 3002 PANEL COMM ERR and 3018 COMM FAULT FUNC.

Code	Description
1201	**CONST SPEED SEL** Defines the digital inputs used to select Constant Speeds. See general comments in introduction. 0 = NOT SEL – Disables the constant speed function. 1 = DI1 – Selects Constant Speed 1 with digital input DI1. • Digital input activated = Constant Speed 1 activated. 2…6 = DI2…DI6 – Selects Constant Speed 1 with digital input DI2…DI6. See above. 7 = DI1,2 – Selects one of three Constant Speeds (1…3) using DI1 and DI2. • Uses two digital inputs, as defined below (0 = DI de-activated, 1 = DI activated): DI1 | DI2 | Function 0 | 0 | No constant speed 1 | 0 | Constant speed 1 (1202) 0 | 1 | Constant speed 2 (1203) 1 | 1 | Constant speed 3 (1204) • Can be set up as a so-called fault speed, which is activated if the control signal is lost. Refer to parameter 3001 AI<MIN function and parameter 3002 PANEL COMM ERR. 8 = DI2,3 – Selects one of three Constant Speeds (1…3) using DI2 and DI3. • See above (DI1,2) for code. 9 = DI3,4 – Selects one of three Constant Speeds (1…3) using DI3 and DI4. • See above (DI1,2) for code. 10 = DI4,5 – Selects one of three Constant Speeds (1…3) using DI4 and DI5. • See above (DI1,2) for code. 11 = DI5,6 – Selects one of three Constant Speeds (1…3) using DI5 and DI6. • See above (DI1,2) for code. 12 = DI1,2,3 – Selects one of seven Constant Speeds (1…7) using DI1, DI2 and DI3. • Uses three digital inputs, as defined below (0 = DI de-activated, 1 = DI activated): DI1 | DI2 | DI3 | Function 0 | 0 | 0 | No constant speed 1 | 0 | 0 | Constant speed 1 (1202) 0 | 1 | 0 | Constant speed 2 (1203) 1 | 1 | 0 | Constant speed 3 (1204) 0 | 0 | 1 | Constant speed 4 (1205) 1 | 0 | 1 | Constant speed 5 (1206) 0 | 1 | 1 | Constant speed 6 (1207) 1 | 1 | 1 | Constant speed 7 (1208)

<table>
<tr><th>Code</th><th>Description</th></tr>
<tr><td></td><td>13 = DI3,4,5 – Selects one of seven Constant Speeds (1…7) using DI3, DI4 and DI5.
• See above (DI1,2,3) for code.
14 = DI4,5,6 – Selects one of seven Constant Speeds (1…7) using DI4, DI5 and DI6.
• See above (DI1,2,3) for code.
15…18 = TIMED FUNC 1…4 – Selects Constant Speed 1, Constant Speed 2 or the external reference, depending on the state of the Timed Function (1…4) and constant speed mode. See parameter 1209 TIMED MODE SEL and Group 36: TIMED FUNCTIONS.
19 = TIMED FUN1&2 – Selects a constant speed or the external reference, depending on the state of Timed Functions 1 & 2 and constant speed mode. See parameter 1209 TIMED MODE SEL and Group 36: TIMED FUNCTIONS.
-1 = DI1(INV) – Selects Constant Speed 1 with digital input DI1.
• Inverse operation: Digital input de-activated = Constant Speed 1 activated.
-2…- 6 = DI2(INV)…DI6(INV) – Selects Constant Speed 1 with digital input. See above.
-7 = DI1,2(INV) – Selects one of three Constant Speeds (1…3) using DI1 and DI2.
• Inverse operation uses two digital inputs, as defined below (0 = DI de-activated, 1 = DI activated):
<table>
<tr><th>DI1</th><th>DI2</th><th>Function</th></tr>
<tr><td>1</td><td>1</td><td>No constant speed</td></tr>
<tr><td>0</td><td>1</td><td>Constant speed 1 (1202)</td></tr>
<tr><td>1</td><td>0</td><td>Constant speed 2 (1203)</td></tr>
<tr><td>0</td><td>0</td><td>Constant speed 3 (1204)</td></tr>
</table>
-8 = DI2,3(INV) – Selects one of three Constant Speeds (1…3) using DI2 and DI3.
• See above (DI1,2(INV)) for code.
-9 = DI3,4(INV) – Selects one of three Constant Speeds (1…3) using DI3 and DI4.
• See above (DI1,2(INV)) for code.
-10 = DI4,5(INV) – Selects one of three Constant Speeds (1…3) using DI4 and DI5.
• See above (DI1,2(INV)) for code.
-11 = DI5,6(INV) – Selects one of three Constant Speeds (1…3) using DI5 and DI6.
• See above (DI1,2(INV)) for code.
-12 = DI1,2,3(INV) – Selects one of seven Constant Speeds (1…7) using DI1, DI2 and DI3.
• Inverse operation uses three digital inputs, as defined below (0 = DI de-activated, 1 = DI activated):
<table>
<tr><th>DI1</th><th>DI2</th><th>DI3</th><th>Function</th></tr>
<tr><td>1</td><td>1</td><td>1</td><td>No constant speed</td></tr>
<tr><td>0</td><td>1</td><td>1</td><td>Constant speed 1 (1202)</td></tr>
<tr><td>1</td><td>0</td><td>1</td><td>Constant speed 2 (1203)</td></tr>
<tr><td>0</td><td>0</td><td>1</td><td>Constant speed 3 (1204)</td></tr>
<tr><td>1</td><td>1</td><td>0</td><td>Constant speed 4 (1205)</td></tr>
<tr><td>0</td><td>1</td><td>0</td><td>Constant speed 5 (1206)</td></tr>
<tr><td>1</td><td>0</td><td>0</td><td>Constant speed 6 (1207)</td></tr>
<tr><td>0</td><td>0</td><td>0</td><td>Constant speed 7 (1208)</td></tr>
</table>
-13 = DI3,4,5(INV) – Selects one of seven Constant Speeds (1…7) using DI3, DI4 and DI5.
• See above (DI1,2,3(INV)) for code.
-14 = DI4,5,6(INV) – Selects one of seven Constant Speeds (1…7) using DI4, DI5 and DI6.
• See above (DI1,2,3(INV)) for code.</td></tr>
<tr><td>1202</td><td>CONST SPEED 1
Sets value for Constant Speed 1.
• The range and units depend on parameter 9904 MOTOR CTRL MODE.
• Range: 0…30000 rpm when 9904 = 1 (VECTOR:SPEED) or 2 (VECTOR:TORQ).
• Range: 0…500 Hz when 9904 = 3 (SCALAR:FREQ).</td></tr>
<tr><td>1203
…
1208</td><td>CONST SPEED 2…CONST SPEED 7
Each sets a value for a Constant Speed. See CONST SPEED 1 above.
Constant Speed 7 is used also as jogging speed. See parameter 1004 JOGGING SEL.</td></tr>
</table>

Code	Description
1209	**TIMED MODE SEL** Defines timed function activated constant speed mode. Timed function can be used to change between the external reference and constant speeds when parameter 1201 CONST SPEED SEL = 15…18 (TIMED FUNC 1…4) or 19 (TIMED FUN1&2). 1 = EXT/CS1/2/3 • If parameter 1201 = 15…18 (TIMED FUNC 1…4), selects an external speed when this timed function (1…4) is not active and selects Constant speed 1 when it is active.

TIMED FUNCTION 1…4	Function
0	External reference
1	Constant speed 1 (1202)

• If parameter 1201 = 19 (TIMED FUN1&2), selects an external speed when neither timed function is active, selects Constant speed 1 when only Timed function 1 is active, selects Constant speed 2 when only Timed function 2 is active and selects Constant speed 3 when both Timed functions 1 and 2 are active.

TIMED FUNCTION 1	TIMED FUNCTION 2	Function
0	0	External reference
1	0	Constant speed 1 (1202)
0	1	Constant speed 2 (1203)
1	1	Constant speed 3 (1204)

2 = CS1/2/3/4

• If parameter 1201 = 15…18 (TIMED FUNC 1…4), selects Constant speed 1 when this timed function (1…4) is not active and selects Constant speed 2 when it is active.

TIMED FUNCTION 1…4	Function
0	Constant speed 1 (1202)
1	Constant speed 2 (1203)

• If parameter 1201 = 19 (TIMED FUN1&2), selects Constant speed 1 when neither timed function is active, selects Constant speed 2 when only Timed function 1 is active, selects Constant speed 3 when only Timed function 2 is active and selects Constant speed 4 when both Timed functions 1 and 2 are active.

TIMED FUNCTION 1	TIMED FUNCTION 2	Function
0	0	Constant speed 1 (1202)
1	0	Constant speed 2 (1203)
0	1	Constant speed 3 (1204)
1	1	Constant speed 4 (1205)

Group 13: ANALOG INPUTS

This group defines the limits and the filtering for analog inputs.

Code	Description
1301	**MINIMUM AI1** Defines the minimum value of the analog input. • Define value as a percent of the full analog signal range. See example below. • The minimum analog input signal corresponds to 1104 REF1 MIN or 1107 REF2 MIN. • MINIMUM AI cannot be greater than MAXIMUM AI. • These parameters (reference and analog min. and max. settings) provide scale and offset adjustment for the reference. • See the figure at parameter 1104. **Example:** To set the minimum analog input value to 4 mA: • Configure the analog input for 0…20 mA current signal. • Calculate the minimum (4 mA) as a percent of full range (20 mA) = 4 mA / 20 mA · 100% = 20%
1302	**MAXIMUM AI1** Defines the maximum value of the analog input. • Define value as a percent of the full analog signal range. • The maximum analog input signal corresponds to 1105 REF1 MAX or 1108 REF2 MAX. • See the figure at parameter 1104.
1303	**FILTER AI1** Defines the filter time constant for analog input 1 (AI1). • The filtered signal reaches 63% of a step change within the time specified. 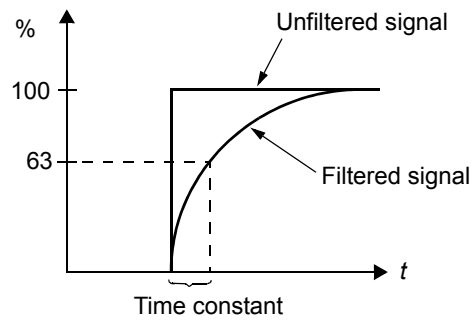
1304	**MINIMUM AI2** Defines the minimum value of the analog input. • See MINIMUM AI1 above.
1305	**MAXIMUM AI2** Defines the maximum value of the analog input. • See MAXIMUM AI1 above.
1306	**FILTER AI2** Defines the filter time constant for analog input 2 (AI2). • See FILTER AI1 above.

Group 14: RELAY OUTPUTS

This group defines the condition that activates each of the relay outputs. Relay outputs 4…6 are only available if OREL-01 Relay Output Extension Module is installed.

Code	Description
1401	**RELAY OUTPUT 1** Defines the event or condition that activates relay 1 – what relay output 1 means. 0 = NOT SEL – Relay is not used and is de-energized. 1 = READY – Energize relay when drive is ready to function. Requires: • Run enable signal present. • No faults exist. • Supply voltage is within range. • Emergency Stop command is not on. 2 = RUN – Energize relay when the drive is running. 3 = FAULT(-1) – Energize relay when power is applied. De-energizes when a fault occurs. 4 = FAULT – Energize relay when a fault is active. 5 = ALARM – Energize relay when an alarm is active. 6 = REVERSED – Energize relay when motor rotates in reverse direction. 7 = STARTED – Energize relay when drive receives a start command (even if Run Enable signal is not present). De-energized relay when drive receives a stop command or a fault occurs. 8= SUPRV1 OVER – Energize relay when first supervised parameter (3201) exceeds the limit (3203). • See *Group 32: SUPERVISION* starting on page *149*. 9 = SUPRV1 UNDER – Energize relay when first supervised parameter (3201) drops below the limit (3202). • See *Group 32: SUPERVISION* starting on page *149*. 10 = SUPRV2 OVER – Energize relay when second supervised parameter (3204) exceeds the limit (3206). • See *Group 32: SUPERVISION* starting on page *149*. 11 = SUPRV2 UNDER – Energize relay when second supervised parameter (3204) drops below the limit (3205). • See *Group 32: SUPERVISION* starting on page *149*. 12 = SUPRV3 OVER – Energize relay when third supervised parameter (3207) exceeds the limit (3209). • See *Group 32: SUPERVISION* starting on page *149*. 13 = SUPRV3 UNDER – Energize relay when third supervised parameter (3207) drops below the limit (3208). • See *Group 32: SUPERVISION* starting on page *149*. 14 = AT SET POINT – Energize relay when the output frequency is equal to the reference frequency. 15 = FAULT(RST) – Energize relay when the drive is in a fault condition and will reset after the programmed auto-reset delay. • See parameter 3103 DELAY TIME. 16 = FLT/ALARM – Energize relay when fault or alarm occurs. 17 = EXT CTRL – Energize relay when external control is selected. 18 = REF 2 SEL – Energize relay when EXT2 is selected. 19 = CONST FREQ – Energize relay when a constant speed is selected. 20 = REF LOSS – Energize relay when reference or active control place is lost. 21 = OVERCURRENT – Energize relay when an overcurrent alarm or fault occurs. 22 = OVERVOLTAGE – Energize relay when an overvoltage alarm or fault occurs. 23 = DRIVE TEMP – Energize relay when a drive or control board overtemperature alarm or fault occurs. 24 = UNDERVOLTAGE – Energize relay when an undervoltage alarm or fault occurs. 25 = AI1 LOSS – Energize relay when AI1 signal is lost. 26 = AI2 LOSS – Energize relay when AI2 signal is lost. 27 = MOTOR TEMP – Energize relay when a motor overtemperature alarm or fault occurs. 28 = STALL – Energize relay when a stall alarm or fault exists. 30 = PID SLEEP – Energize relay when the PID sleep function is active. 31 = PFC – Use relay to start/stop motor in PFC control (See *Group 81: PFC CONTROL*). • Use this option only when PFC control is used. • Selection activated / deactivated when drive is not running. 32 = AUTOCHANGE – Energize relay when PFC autochange operation is performed. • Use this option only when PFC control is used. 33 = FLUX READY – Energize relay when the motor is magnetized and able to supply nominal torque (motor has reached nominal magnetizing). 34 = USER MACRO 2 – Energize relay when User Parameter Set 2 is active.

Code	Description

35 = COMM – Energize relay based on input from fieldbus communication.
- Fieldbus writes binary code in parameter 0134 that can energize relay 1…relay 6 according to the following:

Par. 0134	Binary	RO6	RO5	RO4	RO3	RO2	RO1
0	000000	0	0	0	0	0	0
1	000001	0	0	0	0	0	1
2	000010	0	0	0	0	1	0
3	000011	0	0	0	0	1	1
4	000100	0	0	0	1	0	0
5…62	…	…	…	…	…	…	…
63	111111	1	1	1	1	1	1

- 0 = De-energize relay, 1 = Energize relay.

36 = COMM(-1) – Energize relay based on input from fieldbus communication.
- Fieldbus writes binary code in parameter 0134 that can energize relay 1…relay 6 according to the following:

Par. 0134	Binary	RO6	RO5	RO4	RO3	RO2	RO1
0	000000	1	1	1	1	1	1
1	000001	1	1	1	1	1	0
2	000010	1	1	1	1	0	1
3	000011	1	1	1	1	0	0
4	000100	1	1	1	0	1	1
5…62	…	…	…	…	…	…	…
63	111111	0	0	0	0	0	0

- 0 = De-energize relay, 1 = Energize relay.

37 = TIMED FUNC 1 – Energize relay when Timed Function 1 is active. See *Group 36: TIMED FUNCTIONS*.
38…40 = TIMED FUNC 2…4 – Energize relay when Timed Function 2…4 is active. See TIMED FUNC 1 above.
41 = MNT TRIG FAN – Energize relay when cooling fan counter is triggered. See *Group 29: MAINTENANCE TRIG*.
42 = MNT TRIG REV – Energize relay when revolutions counter is triggered. See *Group 29: MAINTENANCE TRIG*.
43 = MNT TRIG RUN – Energize relay when run time counter is triggered. See *Group 29: MAINTENANCE TRIG*.
44 = MNT TRIG MWH – Energize relay when MWh counter is triggered. See *Group 29: MAINTENANCE TRIG*.
46 = START DELAY – Energize relay when a start delay is active.
47 = USER LOAD C – Energize relay when a user load curve fault or alarm occurs.
52 = JOG ACTIVE – Energize relay when the jogging function is active.

1402 **RELAY OUTPUT 2**

Defines the event or condition that activates relay 2 – what relay output 2 means.
- See 1401 RELAY OUTPUT 1.

1403 **RELAY OUTPUT 3**

Defines the event or condition that activates relay 3 – what relay output 3 means.
- See 1401 RELAY OUTPUT 1.

1404 **RO 1 ON DELAY**

Defines the switch-on delay for relay 1.
- On / off delays are ignored when relay output 1401 is set to PFC.

1405 **RO 1 OFF DELAY**

Defines the switch-off delay for relay 1.
- On / off delays are ignored when relay output 1401 is set to PFC.

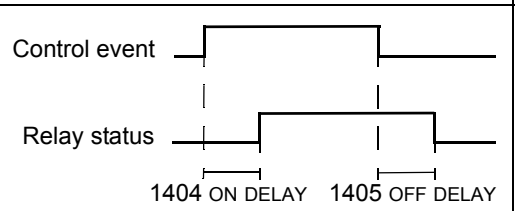

1406 **RO 2 ON DELAY**

Defines the switch-on delay for relay 2.
- See RO 1 ON DELAY.

1407 **RO 2 OFF DELAY**

Defines the switch-off delay for relay 2.
- See RO 1 OFF DELAY.

1408 **RO 3 ON DELAY**

Defines the switch-on delay for relay 3.
- See RO 1 ON DELAY.

Code	Description
1409	**RO 3 OFF DELAY** Switch-off delay for relay 3. • See RO 1 OFF DELAY.
1410 … 1412	**RELAY OUTPUT 4…6** Defines the event or condition that activates relay 4…6 – what relay output 4…6 means. Available if OREL-01 Relay Output Extension Module is installed. • See 1401 RELAY OUTPUT 1.
1413	**RO 4 ON DELAY** Defines the switch-on delay for relay 4. • See RO 1 ON DELAY.
1414	**RO 4 OFF DELAY** Defines the switch-off delay for relay 4. • See RO 1 OFF DELAY.
1415	**RO 5 ON DELAY** Defines the switch-on delay for relay 5. • See RO 1 ON DELAY.
1416	**RO 5 OFF DELAY** Defines the switch-off delay for relay 5. • See RO 1 OFF DELAY.
1417	**RO 6 ON DELAY** Defines the switch-on delay for relay 6. • See RO 1 ON DELAY.
1418	**RO 6 OFF DELAY** Defines the switch-off delay for relay 6. • See RO 1 OFF DELAY.

Group 15: ANALOG OUTPUTS

This group defines the drive's analog (current signal) outputs. The drive's analog outputs can be:

- any parameter in *Group 01: OPERATING DATA*
- limited to programmable minimum and maximum values of output current
- scaled (and/or inverted) by defining the minimum and maximum values of the source parameter (or content). Defining an maximum value (parameter 1503 or 1509) that is less than the content minimum value (parameter 1502 or 1508) results in an inverted output.
- filtered.

Code	Description
1501	**AO1 CONTENT SEL** Defines the content for analog output AO1. 99 = EXCITE PTC – Provides a current source for sensor type PTC. Output = 1.6 mA. See *Group 35: MOTOR TEMP MEAS*. 100 = EXCITE PT100 – Provides a current source for sensor type PT100. Output = 9.1 mA. See *Group 35: MOTOR TEMP MEAS*. 101…178 – Output corresponds to a parameter in *Group 01: OPERATING DATA*. • Parameter defined by value (value 102 = parameter 0102)
1502	**AO1 CONTENT MIN** Sets the minimum content value. • Content is the parameter selected by parameter 1501. • Minimum value refers to the minimum content value that will be converted to an analog output. • These parameters (content and current min. and max. settings) provide scale and offset adjustment for the output. See the figure.
1503	**AO1 CONTENT MAX** Sets the maximum content value • Content is the parameter selected by parameter 1501. • Maximum value refers to the maximum content value that will be converted to an analog output.
1504	**MINIMUM AO1** Sets the minimum output current.
1505	**MAXIMUM AO1** Sets the maximum output current.
1506	**FILTER AO1** Defines the filter time constant for AO1. • The filtered signal reaches 63% of a step change within the time specified. • See the figure in parameter 1303.
1507	**AO2 CONTENT SEL** Defines the content for analog output AO2. See AO1 CONTENT SEL above.
1508	**AO2 CONTENT MIN** Sets the minimum content value. See AO1 CONTENT MIN above.
1509	**AO2 CONTENT MAX** Sets the maximum content value. See AO1 CONTENT MAX above.
1510	**MINIMUM AO2** Sets the minimum output current. See MINIMUM AO1 above.

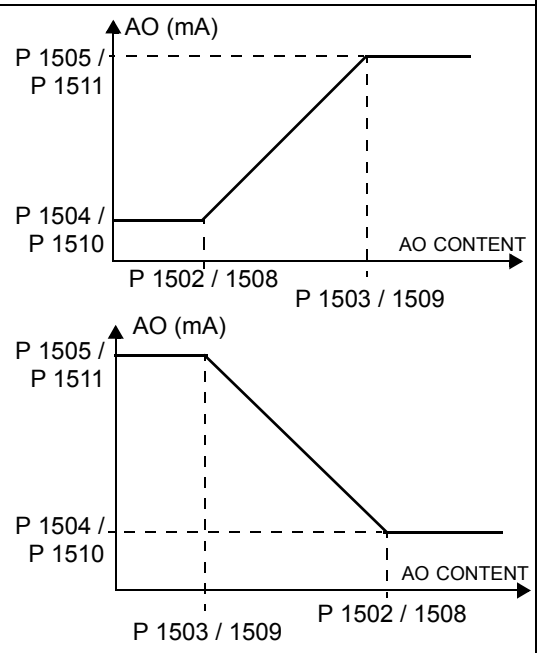

Code	Description
1511	**MAXIMUM AO2** Sets the maximum output current. See MAXIMUM AO1 above.
1512	**FILTER AO2** Defines the filter time constant for AO2. See FILTER AO1 above.

Group 16: SYSTEM CONTROLS

This group defines a variety of system level locks, resets and enables.

Code	Description
1601	**RUN ENABLE** Selects the source of the run enable signal. 0 = NOT SEL – Allows the drive to start without an external run enable signal. 1 = DI1 – Defines digital input DI1 as the run enable signal. • This digital input must be activated for run enable. • If the voltage drops and de-activates this digital input, the drive will coast to stop and not start until the run enable signal resumes. 2…6 = DI2…DI6 – Defines digital input DI2…DI6 as the run enable signal. • See DI1 above. 7 = COMM – Assigns the fieldbus Command Word as the source for the run enable signal. • Bit 6 of the Command Word 1 (parameter 0301) activates the run disable signal. • See fieldbus user's manual for detailed instructions. -1 = DI1(INV) – Defines an inverted digital input DI1 as the run enable signal. • This digital input must be de-activated for run enable. • If this digital input activates, the drive will coast to stop and not start until the run enable signal resumes. -2…-6 = DI2(INV)…DI6(INV) – Defines an inverted digital input DI2…DI6 as the run enable signal. • See DI1(INV) above.
1602	**PARAMETER LOCK** Determines if the control panel can change parameter values. • This lock does not limit parameter changes made by macros. • This lock does not limit parameter changes written by fieldbus inputs. • This parameter value can be changed only if the correct pass code is entered. See parameter 1603 PASS CODE. 0 = LOCKED – You cannot use the control panel to change parameter values. • The lock can be opened by entering the valid pass code to parameter 1603. 1 = OPEN – You can use the control panel to change parameter values. 2 = NOT SAVED – You can use the control panel to change parameter values, but they are not stored in permanent memory. • Set parameter 1607 PARAM SAVE to 1 (SAVE) to store changed parameter values to memory.
1603	**PASS CODE** Entering the correct pass code allows you to change the parameter lock. • See parameter 1602 above. • The code 358 allows you to change the value of the parameter 1602 once. • This entry reverts back to 0 automatically.
1604	**FAULT RESET SEL** Selects the source for the fault reset signal. The signal resets the drive after a fault trip if the cause of the fault no longer exists. 0 = KEYPAD – Defines the control panel as the only fault reset source. • Fault reset is always possible with control panel. 1 = DI1 – Defines digital input DI1 as a fault reset source. • Activating the digital input resets the drive. 2…6 = DI2…DI6 – Defines digital input DI2…DI6 as a fault reset source. • See DI1 above. 7 = START/STOP – Defines the Stop command as a fault reset source. • Do not use this option when fieldbus communication provides the start, stop and direction commands. 8 = COMM – Defines the fieldbus as a fault reset source. • The Command Word is supplied through fieldbus communication. • The bit 4 of the Command Word 1 (parameter 0301) resets the drive. -1 = DI1(INV) – Defines an inverted digital input DI1 as a fault reset source. • De-activating the digital input resets the drive. -2…-6 = DI2(INV)…DI6(INV) – Defines an inverted digital input DI2…DI6 as a fault reset source. • See DI1(INV) above.

Code	Description
1605	**USER PAR SET CHG** Defines control for changing the user parameter set. • See parameter 9902 APPLIC MACRO. • The drive must be stopped to change User Parameter Sets. • During a change, the drive will not start. **Note:** Always save the User Parameter Set after changing any parameter settings, or performing a motor identification. • Whenever the power is cycled, or parameter 9902 APPLIC MACRO is changed, the drive loads the last settings saved. Any unsaved changes to a user parameter set are lost. **Note:** The value of this parameter (1605) is not included in the User Parameter Sets, and it does not change if User Parameter Sets change. **Note:** You can use a relay output to supervise the selection of User Parameter Set 2. • See parameter 1401. 0 = NOT SEL – Defines the control panel (using parameter 9902) as the only control for changing User Parameter Sets. 1 = DI1 – Defines digital input DI1 as a control for changing User Parameter Sets. • The drive loads User Parameter Set 1 on the falling edge of the digital input. • The drive loads User Parameter Set 2 on the rising edge of the digital input. • The User Parameter Set changes only when the drive is stopped. 2…6 = DI2…DI6 – Defines digital input DI2…DI6 as a control for changing User Parameter Sets. • See DI1 above. -1 = DI1(INV) – Defines an inverted digital input DI1 as a control for changing User Parameter Sets. • The drive loads User Parameter Set 1 on the rising edge of the digital input. • The drive loads User Parameter Set 2 on the falling edge of the digital input. • The User Parameter Set changes only when the drive is stopped. -2…-6 = DI2(INV)…DI6(INV) – Defines an inverted digital input DI2…DI6 as a control for changing User Parameter Sets. • See DI1(INV) above.
1606	**LOCAL LOCK** Defines control for the use of the LOC mode. The LOC mode allows drive control from the control panel. • When LOCAL LOCK is active, the control panel cannot change to LOC mode. 0 = NOT SEL – Disables the lock. The control panel can select LOC and control the drive. 1 = DI1 – Defines digital input DI1 as the control for setting the local lock. • Activating the digital input locks out local control. • De-activating the digital input enable the LOC selection. 2…6 = DI2…DI6 – Defines digital input DI2…DI6 as the control for setting the local lock. • See DI1 above. 7 = ON – Sets the lock. The control panel cannot select LOC and cannot control the drive. 8 = COMM – Defines bit 14 of the Command Word 1 as the control for setting the local lock. • The Command Word is supplied through fieldbus communication. • The Command Word is 0301. -1 = DI1(INV) – Defines an inverted digital input DI1 as the control for setting the local lock. • De-activating the digital input locks out local control. • Activating the digital input enable the LOC selection. -2…-6 = DI2(INV)…DI6(INV) – Defines an inverted digital input DI2…DI6 as the control for setting the local lock. • See DI1(INV) above.
1607	**PARAM SAVE** Saves all altered parameters to permanent memory. • Parameters altered through a fieldbus are not automatically saved to permanent memory. To save, you must use this parameter. • If 1602 PARAMETER LOCK = 2 (NOT SAVED), parameters altered from the control panel are not saved. To save, you must use this parameter. • If 1602 PARAMETER LOCK = 1 (OPEN), parameters altered from the control panel are stored immediately to permanent memory. 0 = DONE – Value changes automatically when all parameters are saved. 1 = SAVE… – Saves altered parameters to permanent memory.

Code	Description
1608	**START ENABLE 1** Selects the source of the start enable 1 signal. **Note:** Start enable functionality differs from the run enable functionality. 0 = NOT SEL – Allows the drive to start without an external start enable signal. 1 = DI1 – Defines digital input DI1 as the start enable 1 signal. • This digital input must be activated for start enable 1 signal. • If the voltage drops and de-activates this digital input, the drive will coast to stop and show alarm 2021 on the panel display. The drive will not start until start enable 1 signal resumes. 2…6 = DI2…DI6 – Defines digital input DI2…DI6 as the start enable 1 signal. • See DI1 above. 7 = COMM – Assigns the fieldbus Command Word as the source for the start enable 1 signal. • Bit 2 of the Command word 2 (parameter 0302) activates the start disable 1 signal. • See fieldbus user's manual for detailed instructions. -1 = DI1(INV) – Defines an inverted digital input DI1 as the start enable 1 signal. -2…-6 = DI2 (INV)…DI6(INV) – Defines an inverted digital input DI2…DI6 as the start enable 1 signal. • See DI1 (INV) above. 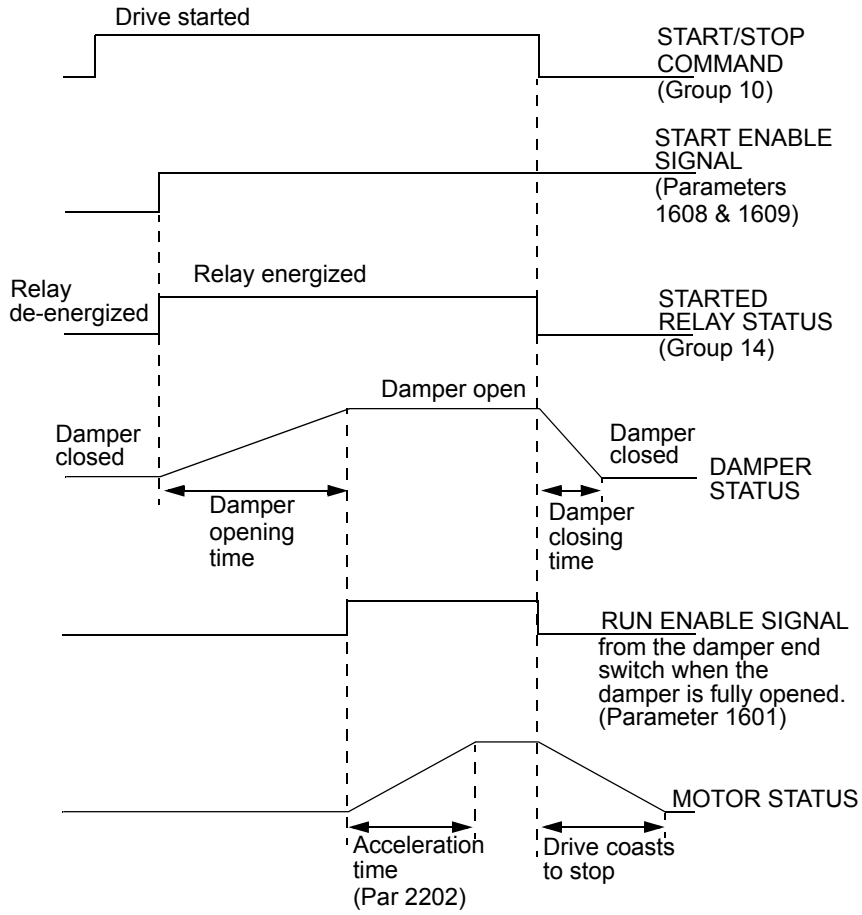

Code	Description
1609	**START ENABLE 2** Selects the source of the start enable 2 signal. **Note:** Start enable functionality differs from the run enable functionality. 0 = NOT SEL – Allows the drive to start without an external start enable signal. 1 = DI1 – Defines digital input DI1 as the start enable 2 signal. • This digital input must be activated for start enable 2 signal. • If the voltage drops and de-activates this digital input, the drive will coast to stop and show alarm 2022 on the panel display. The drive will not start until start enable 2 signal resumes. 2…6 = DI2…DI6 – Defines digital input DI2…DI6 as the start enable 2 signal. • See DI1 above. 7 = COMM – Assigns the fieldbus Command Word as the source for the start enable 2 signal. Bit 3 of the Command word 2 (parameter 0302) activates the start disable 2 signal. • See fieldbus user's manual for detailed instructions. -1 = DI1(INV) – Defines an inverted digital input DI1 as the start enable 2 signal. -2…-6 = DI2(INV)…DI6(INV) – Defines an inverted digital input DI2…DI6 as the start enable 2 signal. • See DI1 (INV) above.
1610	**DISPLAY ALARMS** Controls the visibility of the following alarms: • 2001, Overcurrent alarm • 2002, Overvoltage alarm • 2003, Undervoltage alarm • 2009, Device overtemperature alarm. For more information, see section *Alarm listing* on page *261*. 0 = NO – The above alarms are suppressed. 1 = YES – All of the above alarms are enabled.
1611	**PARAMETER VIEW** Selects the parameter view, i.e. which parameters are shown. **Note:** This parameter is visible only when it is activated by the optional FlashDrop device. FlashDrop is designed for fast copying of parameters to unpowered drives. It allows easy customization of the parameter list, e.g. selected parameters can be hidden. For more information, see *MFDT-01 FlashDrop User's Manual* (3AFE68591074 [English]). FlashDrop parameter values are activated by setting parameter 9902 to 31 (LOAD FD SET). 0 = DEFAULT – Complete long and short parameter lists are shown. 1 = FLASHDROP – FlashDrop parameter list is shown. Does not include short parameter list. Parameters that are hidden by the FlashDrop device are not visible.

Group 20: LIMITS

This group defines minimum and maximum limits to follow in driving the motor – speed, frequency, current, torque, etc.

Code	Description	
2001	**MINIMUM SPEED** Defines the minimum speed (rpm) allowed. • A positive (or zero) minimum speed value defines two ranges, one positive and one negative. • A negative minimum speed value defines one speed range. • See the figure.	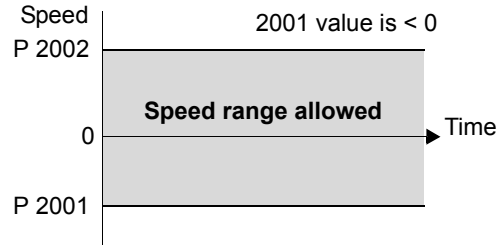
2002	**MAXIMUM SPEED** Defines the maximum speed (rpm) allowed.	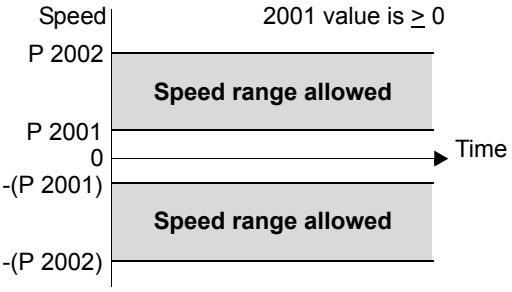
2003	**MAX CURRENT** Defines the maximum output current (A) supplied by the drive to the motor.	
2005	**OVERVOLT CTRL** Sets the DC overvoltage controller on or off. • Fast braking of a high inertia load causes the DC bus voltage to rise to the overvoltage control limit. To prevent the DC voltage from exceeding the trip limit, the overvoltage controller automatically decreases the braking torque by increasing output frequency. 0 = DISABLE – Disables controller. 1 = ENABLE – Enables controller **Note:** If a braking chopper or a braking resistor is connected to the drive, this parameter value must be set to 0 (DISABLE) to ensure proper operation of the chopper.	
2006	**UNDERVOLT CTRL** Sets the DC undervoltage controller on or off. When on: • If the DC bus voltage drops due to loss of input power, the undervoltage controller decreases the motor speed in order to keep the DC bus voltage above the lower limit. • When the motor speed decreases, the inertia of the load causes regeneration back into the drive, keeping the DC bus charged and preventing an undervoltage trip. • The DC undervoltage controller increases power loss ride-through on systems with a high inertia, such as a centrifuge or a fan. 0 = DISABLE – Disables controller. 1 = ENABLE(TIME) – Enables controller with 500 ms time limit for operation. 2 = ENABLE – Enables controller without maximum time limit for operation.	

Code	Description
2007	**MINIMUM FREQ** Defines the minimum limit for the drive output frequency. • A positive or zero minimum frequency value defines two ranges, one positive and one negative. • A negative minimum frequency value defines one speed range. See the figure. **Note:** Keep MINIMUM FREQ ≤ MAXIMUM FREQ.
2008	**MAXIMUM FREQ** Defines the maximum limit for the drive output frequency.

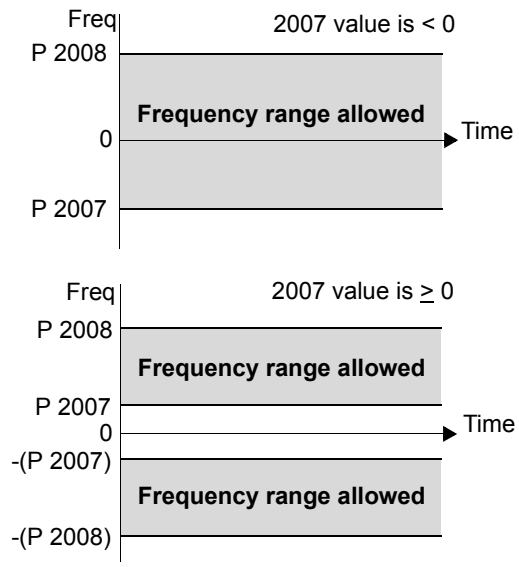

2013	**MIN TORQUE SEL** Defines control of the selection between two minimum torque limits (2015 MIN TORQUE 1 and 2016 MIN TORQUE 2). 0 = MIN TORQUE 1 – Selects 2015 MIN TORQUE 1 as the minimum limit used. 1 = DI1 – Defines digital input DI1 as the control for selecting the minimum limit used. • Activating the digital input selects MIN TORQUE 2 value. • De-activating the digital input selects MIN TORQUE 1 value. 2…6 = DI2…DI6 – Defines digital input DI2…DI6 as the control for selecting the minimum limit used. • See DI1 above. 7 = COMM – Defines bit 15 of the Command Word 1 as the control for selecting the minimum limit used. • The Command Word is supplied through fieldbus communication. • The Command Word is parameter 0301. -1 = DI1(INV) – Defines an inverted digital input DI1 as the control for selecting the minimum limit used. • Activating the digital input selects MIN TORQUE 1 value. • De-activating the digital input selects MIN TORQUE 2 value. -2…-6 = DI2(INV)…DI6(INV) – Defines an inverted digital input DI2…DI6 as the control for selecting the minimum limit used. • See DI1(INV) above.
2014	**MAX TORQUE SEL** Defines control of the selection between two maximum torque limits (2017 MAX TORQUE 1 and 2018 MAX TORQUE 2). 0 = MAX TORQUE 1 – Selects 2017 MAX TORQUE 1 as the maximum limit used. 1 = DI1 – Defines digital input DI1 as the control for selecting the maximum limit used. • Activating the digital input selects MAX TORQUE 2 value. • De-activating the digital input selects MAX TORQUE 1 value. 2…6 = DI2…DI6 – Defines digital input DI2…DI6 as the control for selecting the maximum limit used. • See DI1 above. 7 = COMM – Defines bit 15 of the Command Word 1 as the control for selecting the maximum limit used. • The Command Word is supplied through fieldbus communication. • The Command Word is parameter 0301. -1 = DI1(INV) – Defines an inverted digital input di1 as the control for selecting the maximum limit used. • Activating the digital input selects MAX TORQUE 1 value. • De-activating the digital input selects MAX TORQUE 2 value. -2…-6 = DI2(INV)…DI6(INV) – Defines an inverted digital input DI2…DI6 as the control for selecting the maximum limit used. • See DI1(INV) above.
2015	**MIN TORQUE 1** Sets the first minimum limit for torque (%). Value is a percent of the motor nominal torque.
2016	**MIN TORQUE 2** Sets the second minimum limit for torque (%). Value is a percent of the motor nominal torque.

Code	Description
2017	**MAX TORQUE 1** Sets the first maximum limit for torque (%). Value is a percent of the motor nominal torque.
2018	**MAX TORQUE 2** Sets the second maximum limit for torque (%). Value is a percent of the motor nominal torque.

Group 21: START/STOP

This group defines how the motor starts and stops. The ACS550 supports several start and stop modes.

Code	Description
2101	**START FUNCTION** Selects the motor start method. The valid options depend on the value of parameter 9904 MOTOR CTRL MODE. 1 = AUTO – Selects the automatic start mode. • Vector control modes: Optimal start in most cases. The drive automatically selects the correct output frequency to start a rotating motor. • SCALAR:FREQ mode: Immediate start from zero frequency. Identical to selection 8 = RAMP. 2 = DC MAGN – Selects the DC Magnetizing start mode. **Note:** The DC Magnetizing start mode cannot start a rotating motor. **Note:** The drive starts when the set pre-magnetizing time (parameter 2103 DC MAGN TIME) has passed, even if motor magnetization is not complete. • Vector control modes: Magnetizes the motor within the time determined by the parameter 2103 DC MAGN TIME using DC current. The normal control is released exactly after the magnetizing time. This selection guarantees the highest possible break-away torque. • SCALAR:FREQ mode: Magnetizes the motor within the time determined by the parameter 2103 DC MAGN TIME using DC current. The normal control is released exactly after the magnetizing time. 3 = SCALAR FLYST – Selects the flying start mode. • Vector control modes: Not applicable. • SCALAR:FREQ mode: The drive automatically selects the correct output frequency to start a rotating motor – useful if the motor is already rotating and if the drive will start smoothly at the current frequency. • Cannot be used in multimotor systems. 4 = TORQ BOOST – Selects the automatic torque boost mode (SCALAR:FREQ mode only). • May be necessary in drives with high starting torque. • Torque boost is only applied at start, ending when output frequency exceeds 20 Hz or when output frequency is equal to reference. • In the beginning the motor magnetizes within the time determined by the parameter 2103 DC MAGN TIME using DC current. • See parameter 2110 TORQ BOOST CURR. 5 = FLY + BOOST – Selects both the flying start and the torque boost mode (SCALAR:FREQ mode only). • Flying start routine is performed first and the motor is magnetized. If the speed is found to be zero, the torque boost is done. 8 = RAMP – Immediate start from zero frequency.
2102	**STOP FUNCTION** Selects the motor stop method. 1 = COAST – Selects cutting off the motor power as the stop method. The motor coasts to stop. 2 = RAMP – Selects using a deceleration ramp. • Deceleration ramp is defined by 2203 DECELER TIME 1 or 2206 DECELER TIME 2 (whichever is active).
2103	**DC MAGN TIME** Defines the pre-magnetizing time for the DC Magnetizing start mode. • Use parameter 2101 to select the start mode. • After the start command, the drive pre-magnetizes the motor for the time defined here and then starts the motor. • Set the pre-magnetizing time just long enough to allow full motor magnetization. Too long a time heats the motor excessively.
2104	**DC HOLD CTL** Selects whether DC current is used for braking or DC Hold. 0 = NOT SEL – Disables the DC current operation. 1 = DC HOLD – Enables the DC Hold function. See the diagram. • Requires parameter 9904 MOTOR CTRL MODE = 1 (VECTOR:SPEED) • Stops generating sinusoidal current and injects DC into the motor when both the reference and the motor speed drop below the value of parameter 2105. • When the reference rises above the level of parameter 2105 the drive resumes normal operation. 2 = DC BRAKING – Enables the DC Injection Braking after modulation has stopped. • If parameter 2102 STOP FUNCTION is 1 (COAST), braking is applied after start is removed. • If parameter 2102 STOP FUNCTION is 2 (RAMP), braking is applied after ramp. 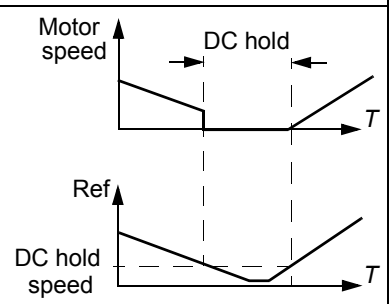

Code	Description
2105	**DC HOLD SPEED** Sets the speed for DC Hold. Requires that parameter 2104 DC HOLD CTL = 1 (DC HOLD).
2106	**DC CURR REF** Defines the DC current control reference as a percentage of parameter 9906 MOTOR NOM CURR.
2107	**DC BRAKE TIME** Defines the DC brake time after modulation has stopped, if parameter 2104 is 2 (DC BRAKING).
2108	**START INHIBIT** Sets the Start inhibit function on or off. If the drive is not actively started and running, the Start inhibit function ignores a pending start command in any of the following situations and a new start command is required: • A fault is reset. • Run Enable (parameter 1601) activates while start command is active. • Mode changes from local to remote. • Control switches from EXT1 to EXT2. • Control switches from EXT2 to EXT1. 0 = OFF – Disables the Start inhibit function. 1 = ON – Enables the Start inhibit function.
2109	**EMERG STOP SEL** Defines control of the Emergency stop command. When activated: • Emergency stop decelerates the motor using the emergency stop ramp (parameter 2208 EMERG DEC TIME). • Requires an external stop command and removal of the emergency stop command before drive can restart. 0 = NOT SEL – Disables the Emergency stop function through digital inputs. 1 = DI1 – Defines digital input DI1 as the control for Emergency stop command. • Activating the digital input issues an Emergency stop command. • De-activating the digital input removes the Emergency stop command. 2…6 = DI2…DI6 – Defines digital input DI2…DI6 as the control for Emergency stop command. • See DI1 above. -1 = DI1(INV) – Defines an inverted digital input DI1 as the control for Emergency stop command. • De-activating the digital input issues an Emergency stop command. • Activating the digital input removes the Emergency stop command. -2…-6 = DI2(INV)…DI6(INV) – Defines an inverted digital input DI2…DI6 as the control for Emergency stop command. • See DI1(INV) above.
2110	**TORQ BOOST CURR** Sets the maximum supplied current during torque boost. • See parameter 2101 START FUNCTION.

Code	Description
2112	**ZERO SPEED DELAY** Defines the delay for the Zero Speed Delay function. If parameter value is set to zero, the Zero Speed Delay function is disabled. The function is useful in applications where a smooth and quick restarting is essential. During the delay the drive knows accurately the rotor position. **No Zero Speed Delay** **With Zero Speed Delay** 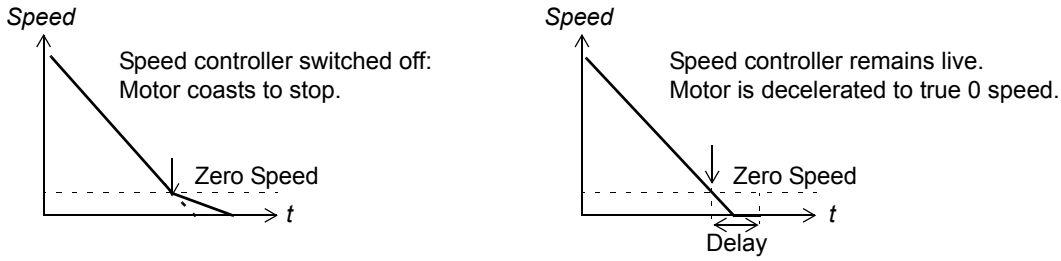 Zero speed delay can be used e.g. with jogging function or mechanical brake. **No Zero Speed Delay** The drive receives a stop command and decelerates along a ramp. When the motor actual speed falls below an internal limit (called Zero Speed), the speed controller is switched off. The drive modulation is stopped and the motor coasts to standstill. **With Zero Speed Delay** The drive receives a stop command and decelerates along a ramp. When the motor actual speed falls below an internal limit (called Zero Speed), the zero speed delay function activates. During the delay the functions keeps the speed controller live: The drive modulates, motor is magnetized and drive is ready for a quick restart. **Note:** Parameter 2102 STOP FUNCTION must be 2 = RAMP for zero speed delay to operate. 0.0 = NOT SEL – Disables the Zero Speed Delay function.
2113	**START DELAY** Defines the Start delay. After the conditions for start have been fulfilled, the drive waits until the delay has elapsed and then starts the motor. Start delay can be used with all start modes. • If START DELAY = zero, the delay is disabled. • During the Start delay, alarm 2028 START DELAY is shown.

Group 22: ACCEL/DECEL

This group defines ramps that control the rate of acceleration and deceleration. You define these ramps as a pair, one for acceleration and one for deceleration. You can define two pairs of ramps and use a digital input to select one or the other pair.

Code	Description
2201	**ACC/DEC 1/2 SEL** Defines control for selection of acceleration/deceleration ramps. • Ramps are defined in pairs, one each for acceleration and deceleration. • See below for the ramp definition parameters. 0 = NOT SEL – Disables selection, the first ramp pair is used. 1 = DI1 – Defines digital input DI1 as the control for ramp pair selection. • Activating the digital input selects ramp pair 2. • De-activating the digital input selects ramp pair 1. 2…6 = DI2…DI6 – Defines digital input DI2…DI6 as the control for ramp pair selection. • See DI1 above. 7 = COMM – Defines bit 10 of the Command Word 1 as the control for ramp pair selection. • The Command Word is supplied through fieldbus communication. • The Command Word is parameter 0301. -1 = DI1(INV) – Defines an inverted digital input DI1 as the control for ramp pair selection. • De-activating the digital input selects ramp pair 2 • Activating the digital input selects ramp pair 1. -2…-6 = DI2(INV)…DI6(INV) – Defines an inverted digital input DI2…DI6 as the control for ramp pair selection. • See DI1(INV) above.
2202	**ACCELER TIME 1** Sets the acceleration time for zero to maximum frequency for ramp pair 1. See A in the figure. • Actual acceleration time also depends on 2204 RAMP SHAPE 1. • See 2008 MAXIMUM FREQ.
2203	**DECELER TIME 1** Sets the deceleration time for maximum frequency to zero for ramp pair 1. • Actual deceleration time also depends on 2204 RAMP SHAPE 1. • See 2008 MAXIMUM FREQ.
2204	**RAMP SHAPE 1** Selects the shape of the acceleration/deceleration ramp for ramp pair 1. See B in the figure. • Shape is defined as a ramp, unless additional time is specified here to reach the maximum frequency. A longer time provides a softer transition at each end of the slope. The shape becomes an s-curve. • Rule of thumb: 1/5 is a suitable relation between the ramp shape time and the acceleration ramp time. 0.0 = LINEAR – Specifies linear acceleration/deceleration ramps for ramp pair 1. 0.1…1000.0 = S-CURVE – Specifies s-curve acceleration/deceleration ramps for ramp pair 1.
2205	**ACCELER TIME 2** Sets the acceleration time for zero to maximum frequency for ramp pair 2. • See 2202 ACCELER TIME 1. • Used also as jogging acceleration time. See 1004 JOGGING SEL.
2206	**DECELER TIME 2** Sets the deceleration time for maximum frequency to zero for ramp pair 2. • See 2203 DECELER TIME 1. • Used also as jogging deceleration time. See 1004 JOGGING SEL.
2207	**RAMP SHAPE 2** Selects the shape of the acceleration/deceleration ramp for ramp pair 2. • See 2204 RAMP SHAPE 1.

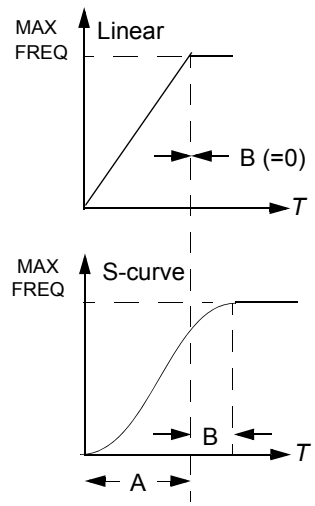

A = 2202 ACCELER TIME 1
B = 2204 RAMP SHAPE 1

Code	Description
2208	**EMERG DEC TIME** Sets the deceleration time for maximum frequency to zero for an emergency. • See parameter 2109 EMERG STOP SEL. • Ramp is linear.
2209	**RAMP INPUT 0** Defines control for forcing the speed to 0 with the currently used deceleration ramp (see parameters 2203 DECELER TIME 1 and 2206 DECELER TIME 2). 0 = NOT SEL – Not selected. 1 = DI1 – Defines digital input DI1 as the control for forcing the speed to 0. • Activating the digital input forces the speed to zero, after which the speed will stay at 0. • De-activating the digital input: speed control resumes normal operation. 2…6 = DI2…DI6 – Defines digital input DI2…DI6 as the control for forcing the speed to 0. • See DI1 above. 7 = COMM – Defines bit 13 of the Command Word 1 as the control for forcing the speed to 0. • The Command Word is supplied through fieldbus communication. • The Command Word is parameter 0301. -1 = DI1(INV) – Defines inverted digital input DI1 as the control for forcing the speed to 0. • De-activating the digital input forces the speed to 0. • Activating the digital input: speed control resumes normal operation. -2…-6 = DI2(INV)…DI6(INV) – Defines an inverted digital input DI2…DI6 as the control for forcing the speed to 0. • See DI1(INV) above.

Group 23: SPEED CONTROL

This group defines variables used for speed control operation.

Code	Description
2301	**PROP GAIN** Sets the relative gain for the speed controller. • Larger values may cause speed oscillation. • The figure shows the speed controller output after an error step (error remains constant). **Note:** You can use parameter 2305 AUTOTUNE RUN to automatically set the proportional gain. 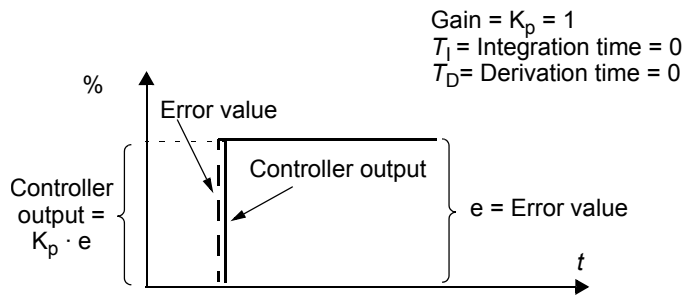
2302	**INTEGRATION TIME** Sets the integration time for the speed controller. • The integration time defines the rate at which the controller output changes for a constant error value. • Shorter integration times correct continuous errors faster. • Control becomes unstable if the integration time is too short. • The figure shows the speed controller output after an error step (error remains constant). **Note:** You can use parameter 2305 AUTOTUNE RUN to automatically set the integration time. 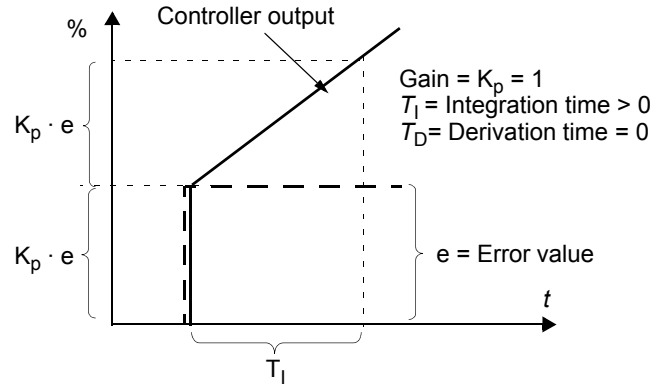
2303	**DERIVATION TIME** Sets the derivation time for the speed controller. • Derivative action makes the control more responsive to error value changes. • The longer the derivation time, the more the speed controller output is boosted during the change. • If the derivation time is set to zero, the controller works as a PI controller, otherwise as a PID controller. The figure below shows the speed controller output after an error step when the error remains constant. 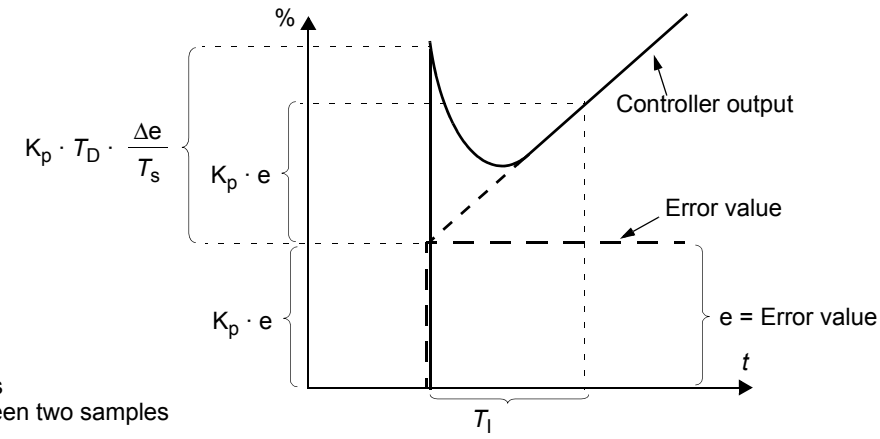 Gain = K_p = 1 T_I = Integration time > 0 T_D= Derivation time > 0 T_s= Sample time period = 2 ms Δe = Error value change between two samples

Code	Description
2304	**ACC COMPENSATION** Sets the derivation time for acceleration compensation. • Adding a derivative of the reference to the output of the speed controller compensates for inertia during acceleration. • 2303 DERIVATION TIME describes the principle of derivative action. • Rule of thumb: Set this parameter between 50 and 100% of the sum of the mechanical time constants for the motor and the driven machine. • The figure shows the speed responses when a high inertia load is accelerated along a ramp. * **No acceleration compensation** **Acceleration compensation** 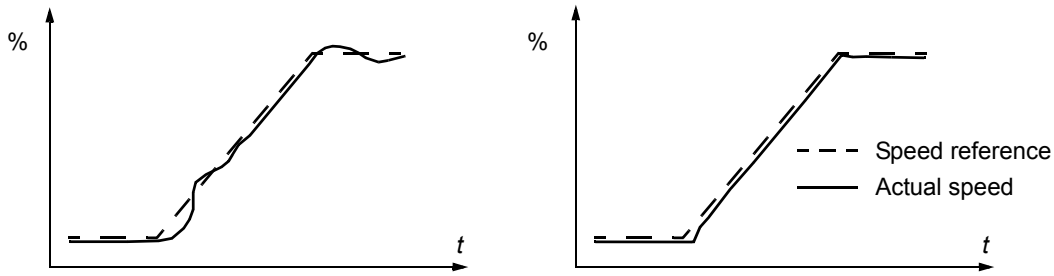 ***Note:** You can use parameter 2305 AUTOTUNE RUN to automatically set acceleration compensation.
2305	**AUTOTUNE RUN** Starts automatic tuning of the speed controller. 0 = OFF – Disables the Autotune creation process. (Does not disable the operation of Autotune settings.) 1 = ON – Activates speed controller autotuning. Automatically reverts to OFF. Procedure: **Note:** The motor load must be connected. • Run the motor at a constant speed of 20 to 40% of the rated speed. • Change the autotuning parameter 2305 to ON. The drive: • Accelerates the motor. • Calculates values for proportional gain, integration time and acceleration compensation. • Changes parameters 2301, 2302 and 2304 to these values. • Resets 2305 to OFF.

Group 24: TORQUE CONTROL

This group defines variables used for torque control operation.

Code	Description
2401	**TORQ RAMP UP** Defines the torque reference ramp up time – The minimum time for the reference to increase from zero to the nominal motor torque.
2402	**TORQ RAMP DOWN** Defines the torque reference ramp down time – The minimum time for the reference to decrease from the nominal motor torque to zero.

Group 25: CRITICAL SPEEDS

This group defines up to three critical speeds or ranges of speeds that are to be avoided due, for example, to mechanical resonance problems at certain speeds.

Code	Description
2501	**CRIT SPEED SEL** Sets the critical speeds function on or off. The critical speed function avoids specific speed ranges. 0 = OFF – Disables the critical speeds function. 1 = ON – Enables the critical speeds function. **Example:** To avoid speeds at which a fan system vibrates badly: • Determine problem speed ranges. Assume they are found to be: 18…23 Hz and 46…52 Hz. • Set 2501 CRIT SPEED SEL = 1. • Set 2502 CRIT SPEED 1 LO = 18 Hz. • Set 2503 CRIT SPEED 1 HI = 23 Hz. • Set 2504 CRIT SPEED 2 LO = 46 Hz. • Set 2505 CRIT SPEED 2 HI = 52 Hz. 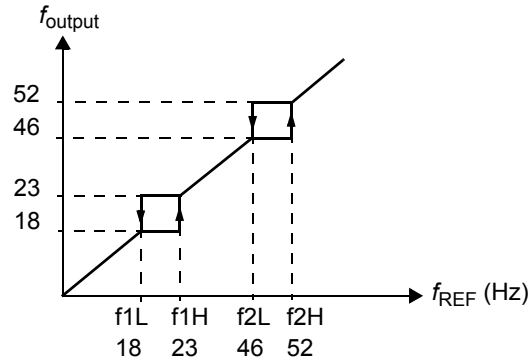
2502	**CRIT SPEED 1 LO** Sets the minimum limit for critical speed range 1. • The value must be less than or equal to 2503 CRIT SPEED 1 HI. • Units are rpm, unless 9904 MOTOR CTRL MODE = 3 (SCALAR:FREQ), then units are Hz.
2503	**CRIT SPEED 1 HI** Sets the maximum limit for critical speed range 1. • The value must be greater than or equal to 2502 CRIT SPEED 1 LO. • Units are rpm, unless 9904 MOTOR CTRL MODE = 3 (SCALAR:FREQ), then units are Hz.
2504	**CRIT SPEED 2 LO** Sets the minimum limit for critical speed range 2. • See parameter 2502.
2505	**CRIT SPEED 2 HI** Sets the maximum limit for critical speed range 2. • See parameter 2503.
2506	**CRIT SPEED 3 LO** Sets the minimum limit for critical speed range 3. • See parameter 2502.
2507	**CRIT SPEED 3 HI** Sets the maximum limit for critical speed range 3. • See parameter 2503.

Group 26: MOTOR CONTROL

This group defines variables used for motor control.

<table>
<tr><th>Code</th><th>Description</th></tr>
<tr><td>2601</td><td colspan="2">FLUX OPT ENABLE
Changes the magnitude of the flux depending on the actual load. Flux Optimization can reduce the total energy consumption and noise, and it should be enabled for drives that usually operate below nominal load.
0 = OFF – Disables the feature.
1 = ON – Enables the feature.</td></tr>
<tr><td>2602</td><td>FLUX BRAKING
Provides faster deceleration by raising the level of magnetization in the motor when needed, instead of limiting the deceleration ramp. By increasing the flux in the motor, the energy of the mechanical system is changed to thermal energy in the motor.
• Requires parameter 9904 MOTOR CTRL MODE = 1 (VECTOR:SPEED) OR 2 (VECTOR:TORQ).
0 = OFF – Disables the feature.
1 = ON – Enables the feature.</td><td> 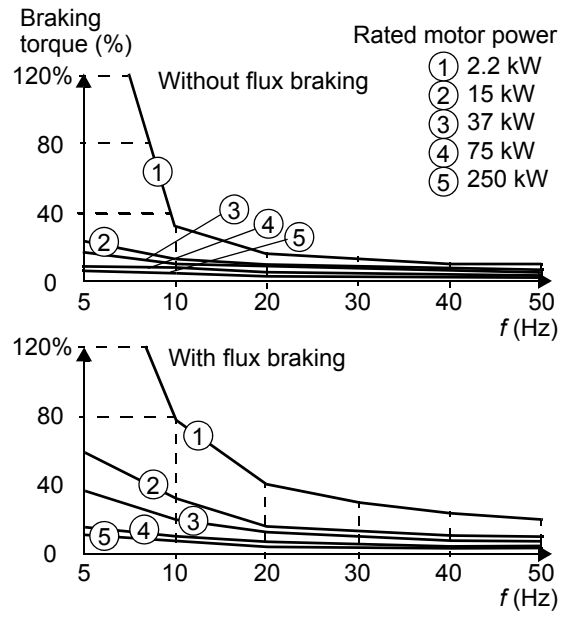
</td></tr>
<tr><td>2603</td><td>IR COMP VOLT
Sets the IR compensation voltage used for 0 Hz.
• Requires parameter 9904 MOTOR CTRL MODE = 3 (SCALAR:FREQ).
• Keep IR compensation as low as possible to prevent overheating.
• Typical IR compensation values are:
<table><tr><th colspan="6">380…480 V drives</th></tr><tr><td>P_N (kW)</td><td>3</td><td>7.5</td><td>15</td><td>37</td><td>132</td></tr><tr><td>IR comp (V)</td><td>18</td><td>15</td><td>12</td><td>8</td><td>3</td></tr></table></td><td rowspan="2">IR compensation
• When enabled, IR compensation provides an extra voltage boost to the motor at low speeds. Use IR compensation, for example, in applications that require a high breakaway torque.
 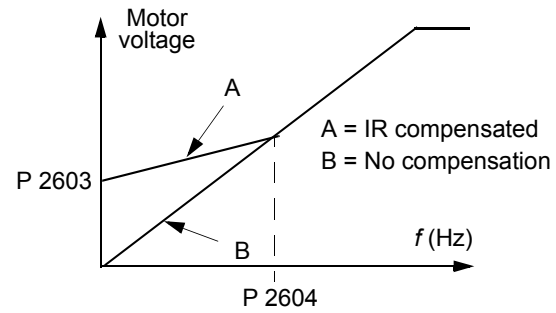
</td></tr>
<tr><td>2604</td><td>IR COMP FREQ
Sets the frequency at which IR compensation is 0 V (in % of motor frequency).</td></tr>
<tr><td>2605</td><td colspan="2">U/F RATIO
Selects the form for the U/f (voltage to frequency) ratio below field weakening point.
1 = LINEAR – Preferred for constant torque applications.
2 = SQUARED – Preferred for centrifugal pump and fan applications. (SQUARED is more silent for most operating frequencies.)</td></tr>
</table>

Code	Description
2606	**SWITCHING FREQ** Sets the switching frequency for the drive. Also see parameter 2607 SWITCH FREQ CTRL and section *Switching frequency derating* on page *274*. • Higher switching frequencies mean less noise. • 12 kHz switching frequency is available in scalar control mode, that is when parameter 9904 MOTOR CTRL MODE = 3 (SCALAR:FREQ). • See the availability of switching frequencies for different drive types in the table below.

	1, 2, 4 and 8 kHz	12 kHz
208…240 V	All types	Frame sizes R1…R4 in scalar control mode
380…480 V	All types	Frame sizes R1…R4 (except ACS550-01-097A-4) in scalar control mode
500…600 V	All types	Frame sizes R2…R4 in scalar control mode

2607	**SWITCH FREQ CTRL** The switching frequency may be reduced if the ACS550 internal temperature rises above a limit. See the figure. This function allows the highest possible switching frequency to be used based on operating conditions. Higher switching frequency results in lower acoustic noise. 0 = OFF – The function is disabled. 1 = ON – The switching frequency is limited according to the figure.	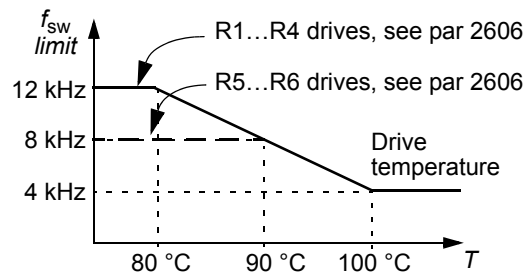
2608	**SLIP COMP RATIO** Sets gain for slip compensation (in %). • A squirrel-cage motor slips under load. Increasing the frequency as the motor torque increases compensates for the slip. • Requires parameter 9904 MOTOR CTRL MODE = 3 (SCALAR:FREQ). 0 – No slip compensation. 1…200 – Increasing slip compensation. 100% means full slip compensation.	
2609	**NOISE SMOOTHING** This parameter introduces a random component to the switching frequency. Noise smoothing distributes the acoustic motor noise over a range of frequencies instead of a single tonal frequency resulting in lower peak noise intensity. The random component has an average of 0 Hz. It is added to the switching frequency set by parameter 2606 SWITCHING FREQ. This parameter has no effect if parameter 2606 = 12 kHz. 0 = DISABLE 1 = ENABLE.	
2619	**DC STABILIZER** Enables or disables the DC voltage stabilizer. The DC stabilizer is used in scalar control mode to prevent possible voltage oscillations in the drive DC bus caused by motor load or weak supply network. In case of voltage variation the drive tunes the frequency reference to stabilize the DC bus voltage and therefore the load torque oscillation. 0 = DISABLE – Disables DC stabilizer. 1 = ENABLE – Enables DC stabilizer.	

Group 29: MAINTENANCE TRIG

This group contains usage levels and trigger points. When usage reaches the set trigger point, a notice displayed on the control panel signals that maintenance is due.

Code	Description
2901	**COOLING FAN TRIG** Sets the trigger point for the drive's cooling fan counter. • Value is compared to parameter 2902 value. 0.0 – Disables the trigger.
2902	**COOLING FAN ACT** Defines the actual value of the drive's cooling fan counter. • When parameter 2901 has been set to a non-zero value, the counter starts. • When the actual value of the counter exceeds the value defined by parameter 2901, a maintenance notice is displayed on the panel. 0.0 – Resets the parameter.
2903	**REVOLUTION TRIG** Sets the trigger point for the motor's accumulated revolutions counter. • Value is compared to parameter 2904 value. 0 – Disables the trigger.
2904	**REVOLUTION ACT** Defines the actual value of the motor's accumulated revolutions counter. • When parameter 2903 has been set to a non-zero value, the counter starts. • When the actual value of the counter exceeds the value defined by parameter 2903, a maintenance notice is displayed on the panel. 0 – Resets the parameter.
2905	**RUN TIME TRIG** Sets the trigger point for the drive's run time counter. • Value is compared to parameter 2906 value. 0.0 – Disables the trigger.
2906	**RUN TIME ACT** Defines the actual value of the drive's run time counter. • When parameter 2905 has been set to a non-zero value, the counter starts. • When the actual value of the counter exceeds the value defined by parameter 2905, a maintenance notice is displayed on the panel. 0.0 – Resets the parameter.
2907	**USER MWh TRIG** Sets the trigger point for the drive's accumulated power consumption (in megawatt hours) counter. • Value is compared to parameter 2908 value. 0.0 – Disables the trigger.
2908	**USER MWh ACT** Defines the actual value of the drive's accumulated power consumption (in megawatt hours) counter. • When parameter 2907 has been set to a non-zero value, the counter starts. • When the actual value of the counter exceeds the value defined by parameter 2907, a maintenance notice is displayed on the panel. 0.0 – Resets the parameter.

Group 30: FAULT FUNCTIONS

This group defines situations that the drive should recognize as potential faults and defines how the drive should respond if the fault is detected.

Code	Description
3001	**AI<MIN FUNCTION** Defines the drive response if the analog input (AI) signal drops below the fault limits and AI is used • as the active reference source (*Group 11: REFERENCE SELECT*) • as the Process or External PID controllers' feedback or setpoint source (*Group 40: PROCESS PID SET 1*, *Group 41: PROCESS PID SET 2* or *Group 42: EXT / TRIM PID*) and the corresponding PID controller is active. 3021 AI1 FAULT LIMIT and 3022 AI2 FAULT LIMIT set the fault limits. 0 = NOT SEL – No response. 1 = FAULT – Displays a fault (7, AI1 LOSS or 8, AI2 LOSS) and the drive coasts to stop. 2 = CONST SP 7 – Displays an alarm (2006, AI1 LOSS or 2007, AI2 LOSS) and sets speed using 1208 CONST SPEED 7. 3 = LAST SPEED – Displays an alarm (2006, AI1 LOSS or 2007, AI2 LOSS) and sets speed using the last operating level. This value is the average speed over the last 10 seconds. **WARNING!** If you select CONST SP 7 or LAST SPEED, make sure that continued operation is safe when the analog input signal is lost.
3002	**PANEL COMM ERR** Defines the drive response to a control panel communication error. 1 = FAULT – Displays a fault (10, PANEL LOSS) and the drive coasts to stop. 2 = CONST SP 7 – Displays an alarm (2008, PANEL LOSS) and sets speed using 1208 CONST SPEED 7. 3 = LAST SPEED – Displays an alarm (2008, PANEL LOSS) and sets speed using the last operating level. This value is the average speed over the last 10 seconds. **Note:** When either of the two external control locations are active, and start, stop and/or direction are through the control panel – 1001 EXT1 COMMANDS / 1002 EXT2 COMMANDS = 8 (KEYPAD) – the drive follows speed/frequency reference according to the configuration of the external control locations, instead of the value of the last speed or parameter 1208 CONST SPEED 7. **WARNING!** If you select CONST SP 7 or LAST SPEED, make sure that continued operation is safe when the control panel communication is lost.
3003	**EXTERNAL FAULT 1** Defines the External Fault 1 signal input and the drive response to an external fault. 0 = NOT SEL – External fault signal is not used. 1 = DI1 – Defines digital input DI1 as the external fault input. • Activating the digital input indicates a fault. The drive displays a fault (14, EXT FAULT 1) and the drive coasts to stop. 2…6 = DI2…DI6 – Defines digital input DI2…DI6 as the external fault input. • See DI1 above. -1 = DI1(INV) – Defines an inverted digital input DI1 as the external fault input. • De-activating the digital input indicates a fault. The drive displays a fault (14, EXT FAULT 1) and the drive coasts to stop. -2…-6 = DI2(INV)…DI6(INV) – Defines an inverted digital input DI2…DI6 as the external fault input. • See DI1(INV) above.
3004	**EXTERNAL FAULT 2** Defines the External Fault 2 signal input and the drive response to an external fault. • See parameter 3003 above.
3005	**MOT THERM PROT** Defines the drive response to motor overheating. 0 = NOT SEL – No response and/or motor thermal protection not set up. 1 = FAULT – When the calculated motor temperature exceeds 90 °C, displays an alarm (2010, MOTOR TEMP). When the calculated motor temperature exceeds 110 °C, displays a fault (9, MOT OVERTEMP) and the drive coasts to stop. 2 = ALARM – When the calculated motor temperature exceeds 90 °C, displays an alarm (2010, MOTOR TEMP).

Code	Description
3006	**MOT THERM TIME** Sets the motor thermal time constant for the motor temperature model. • This is the time required for the motor to reach 63% of the final temperature with steady load. • For thermal protection according to UL requirements for NEMA class motors, use the rule of thumb: MOTOR THERM TIME equals 35 times t6, where t6 (in seconds) is specified by the motor manufacturer as the time that the motor can safely operate at six times its rated current. • The thermal time for a Class 10 trip curve is 350 s, for a Class 20 trip curve 700 s, and for a Class 30 trip curve 1050 s. 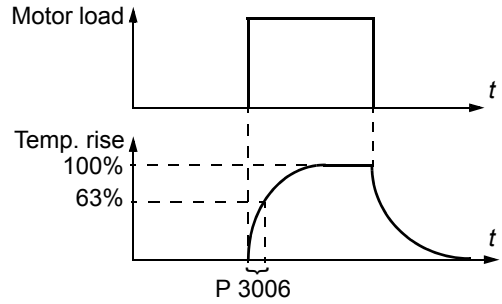
3007	**MOT LOAD CURVE** Sets the maximum allowable operating load of the motor. • With the default value 100%, motor overload protection is functioning when the constant current exceeds 127% of the parameter 9906 MOTOR NOM CURR value. • The default overloadability is at the same level as what motor manufacturers typically allow below 30 °C (86 °F) ambient temperature and below 1000 m (3300 ft) altitude. When the ambient temperature exceeds 30 °C (86 °F) or the installation altitude is over 1000 m (3300 ft), decrease the parameter 3007 value according to the motor manufacturer's recommendation. **Example:** If the constant protection level needs to be 115% of the motor nominal current, set parameter 3007 value to 91% (= 115/127·100%). 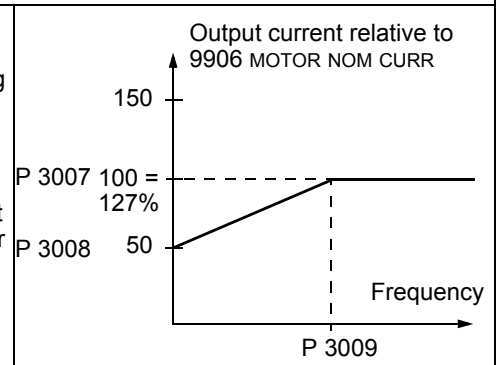
3008	**ZERO SPEED LOAD** Sets the maximum allowable current at zero speed. • Value is relative to 9906 MOTOR NOM CURR.
3009	**BREAK POINT FREQ** Sets the break point frequency for the motor load curve.
	Example: Thermal protection trip times when parameters 3006 MOT THERM TIME, 3007 MOT LOAD CURVE and 3008 ZERO SPEED LOAD have default values. 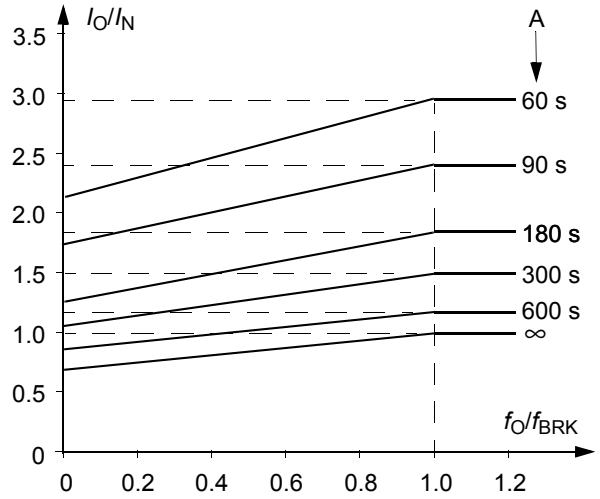 I_O = Output current I_N = Nominal motor current f_O = Output frequency f_{BRK} = Break point frequency A = Trip time

Code	Description
3010	**STALL FUNCTION** This parameter defines the operation of the Stall function. This protection is active if the drive operates in the stall region (see the figure) for the time defined by 3012 STALL TIME. The "User Limit" is defined in *Group 20: LIMITS* by 2017 MAX TORQUE 1, 2018 MAX TORQUE 2, or the limit on the COMM input. 0 = NOT SEL – Stall protection is not used. 1 = FAULT – When the drive operates in the stall region for the time set by 3012 STALL TIME: • The drive coasts to stop. • A fault indication is displayed. 2 = ALARM – When the drive operates in the stall region for the time set by 3012 STALL TIME: • An alarm indication is displayed. • The alarm disappears when the drive is out of the stall region for half the time set by parameter 3012 STALL TIME.
3011	**STALL FREQUENCY** This parameter sets the frequency value for the Stall function. Refer to the figure.
3012	**STALL TIME** This parameter sets the time value for the Stall function.

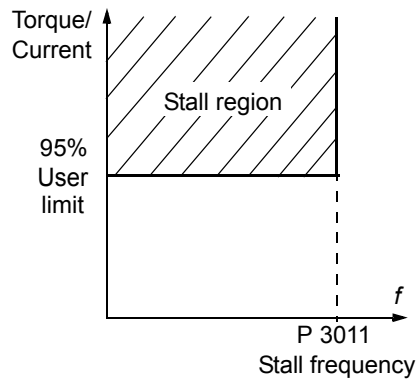

3017	**EARTH FAULT** Defines the drive response if the drive detects a ground fault in the motor or motor cables. The drive monitors for ground faults while the drive is running, and while the drive is not running. Also see parameter 3023 WIRING FAULT. 0 = DISABLE – No drive response to ground faults. **Note:** Disabling earth fault (ground fault) may void the warranty. 1 = ENABLE – Ground faults display fault 16 (EARTH FAULT), and (if running) the drive coasts to stop.
3018	**COMM FAULT FUNC** Defines the drive response if the fieldbus communication is lost. 0 = NOT SEL – No response. 1 = FAULT – Displays a fault (28, SERIAL 1 ERR) and the drive coasts to stop. 2 = CONST SP 7 – Displays an alarm (2005, I/O COMM) and sets speed using 1208 CONST SPEED 7. This "alarm speed" remains active until the fieldbus writes a new reference value. 3 = LAST SPEED – Displays an alarm (2005, I/O COMM) and sets speed using the last operating level. This value is the average speed over the last 10 seconds. This "alarm speed" remains active until the fieldbus writes a new reference value. ⚠ **WARNING!** If you select CONST SP 7, or LAST SPEED, make sure that continued operation is safe when fieldbus communication is lost.
3019	**COMM FAULT TIME** Sets the communication fault time used with 3018 COMM FAULT FUNC. • Brief interruptions in the fieldbus communication are not treated as faults if they are less than the COMM FAULT TIME value.
3021	**AI1 FAULT LIMIT** Sets a fault level for analog input 1. • See 3001 AI<MIN FUNCTION.
3022	**AI2 FAULT LIMIT** Sets a fault level for analog input 2. • See 3001 AI<MIN FUNCTION.

Code	Description
3023	**WIRING FAULT** Defines the drive response to cross wiring faults and to ground faults detected when the drive is NOT running. When the drive is not running it monitors for: • Improper connections of input power to the drive output (the drive can display fault 35, OUTPUT WIRING if improper connections are detected). • Ground faults (the drive can display fault 16, EARTH FAULT if a ground fault is detected). Also, see parameter 3017 EARTH FAULT. 0 = DISABLE – No drive response to either of the above monitoring results. **Note:** Disabling wiring fault (ground fault) may void the warranty. 1 = ENABLE – The drive displays faults when this monitoring detects problems.
3024	**CB TEMP FAULT** Defines the drive response to control board overheating. Not for drives with an OMIO control board. 0 = DISABLE – No response. 1 = ENABLE – Displays fault 37 (CB OVERTEMP) and the drive coasts to stop.

Group 31: AUTOMATIC RESET

This group defines conditions for automatic resets. An automatic reset occurs after a particular fault is detected. The drive holds for a set delay time, then automatically restarts. You can limit the number of resets in a specified time period and set up automatic resets for a variety of faults.

Code	Description
3101	**NUMBER OF TRIALS** Sets the number of allowed automatic resets within a trial period defined by 3102 TRIAL TIME. • If the number of automatic resets exceeds this limit (within the trial time), the drive prevents additional automatic resets and remains stopped. • Starting then requires a successful reset performed from the control panel or from a source selected by 1604 FAULT RESET SEL. **Example:** Three faults have occurred in the trial time. The last is reset only if the value for 3101 NUMBER OF TRIALS is 3 or more. 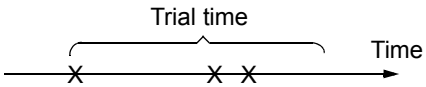
3102	**TRIAL TIME** Sets the time period used for counting and limiting the number of resets. • See 3101 NUMBER OF TRIALS.
3103	**DELAY TIME** Sets the delay time between a fault detection and attempted drive restart. • If DELAY TIME = zero, the drive resets immediately.
3104	**AR OVERCURRENT** Sets the automatic reset for the overcurrent function on or off. 0 = DISABLE – Disables automatic reset. 1 = ENABLE – Enables automatic reset. • Automatically resets the fault (OVERCURRENT) after the delay set by 3103 DELAY TIME, and the drive resumes normal operation.
3105	**AR OVERVOLTAGE** Sets the automatic reset for the overvoltage function on or off. 0 = DISABLE – Disables automatic reset. 1 = ENABLE – Enables automatic reset. • Automatically resets the fault (DC OVERVOLT) after the delay set by 3103 DELAY TIME, and the drive resumes normal operation.
3106	**AR UNDERVOLTAGE** Sets the automatic reset for the undervoltage function on or off. 0 = DISABLE – Disables automatic reset. 1 = ENABLE – Enables automatic reset. • Automatically resets the fault (DC UNDERVOLT) after the delay set by 3103 DELAY TIME, and the drive resumes normal operation.
3107	**AR AI<MIN** Sets the automatic reset for the analog input less than minimum value function on or off. 0 = DISABLE – Disables automatic reset. 1 = ENABLE – Enables automatic reset. • Automatically resets the fault (AI<MIN) after the delay set by 3103 DELAY TIME, and the drive resumes normal operation. ⚠ **WARNING!** When the analog input signal is restored, the drive may restart, even after a long stop. Make sure that automatic, long delayed starts will not cause physical injury and/or damage equipment.
3108	**AR EXTERNAL FLT** Sets the automatic reset for external faults function on or off. 0 = DISABLE – Disables automatic reset. 1 = ENABLE – Enables automatic reset. • Automatically resets the fault (EXT FAULT 1 or EXT FAULT 2) after the delay set by 3103 DELAY TIME, and the drive resumes normal operation.

Group 32: SUPERVISION

This group defines supervision for up to three signals from *Group 01: OPERATING DATA*. Supervision monitors a specified parameter and energizes a relay output if the parameter passes a defined limit. Use *Group 14: RELAY OUTPUTS* to define the relay and whether the relay activates when the signal is too low or too high.

Code	Description
3201	**SUPERV 1 PARAM** Selects the first supervised parameter. • Must be a parameter number from *Group 01: OPERATING DATA*. • 100 = NOT SELECTED – No parameter selected. • 101…178 – Selects parameter 0101…0178. • If the supervised parameter passes a limit, a relay output is energized. • The supervision limits are defined in this group. • The relay outputs are defined in *Group 14: RELAY OUTPUTS* (definition also specifies which supervision limit is monitored). **LO ≤ HI** Operating data supervision using relay outputs, when LO≤HI. • Case A = Parameter 1401 RELAY OUTPUT 1 (or 1402 RELAY OUTPUT 2, etc.) value is SUPRV1 OVER or SUPRV2 OVER. Use for monitoring when/if the supervised signal exceeds a given limit. The relay remains active until the supervised value drops below the low limit. • Case B = Parameter 1401 RELAY OUTPUT 1 (or 1402 RELAY OUTPUT 2, etc.) value is SUPRV1 UNDER or SUPRV2 UNDER. Use for monitoring when/if the supervised signal falls below a given limit. The relay remains active until the supervised value rises above the high limit. **LO > HI** Operating data supervision using relay outputs, when LO>HI. The lowest limit (HI 3203) is active initially and remains active until the supervised parameter goes above the highest limit (LO 3202), making that limit the active limit. That limit remains active until the supervised parameter goes below the lowest limit (HI 3203), making that limit active. • Case A = Parameter 1401 RELAY OUTPUT 1 (or 1402 RELAY OUTPUT 2, etc.) value is SUPRV1 OVER or SUPRV2 OVER. Initially the relay is de-energized. It is energized whenever the supervised parameter goes above the active limit. • Case B = Parameter 1401 RELAY OUTPUT 1 (or 1402 RELAY OUTPUT 2, etc.) value is SUPRV1 UNDER or SUPRV2 UNDER. Initially the relay is energized. It is de-energized whenever the supervised parameter goes below the active limit.
3202	**SUPERV 1 LIM LO** Sets the low limit for the first supervised parameter. See 3201 SUPERV 1 PARAM above.
3203	**SUPERV 1 LIM HI** Sets the high limit for the first supervised parameter. See 3201 SUPERV 1 PARAM above.
3204	**SUPERV 2 PARAM** Selects the second supervised parameter. See 3201 SUPERV 1 PARAM above.
3205	**SUPERV 2 LIM LO** Sets the low limit for the second supervised parameter. See 3204 SUPERV 2 PARAM above.
3206	**SUPERV 2 LIM HI** Sets the high limit for the second supervised parameter. See 3204 SUPERV 2 PARAM above.

LO ≤ HI
Note: Case LO ≤ HI represents a normal hysteresis.

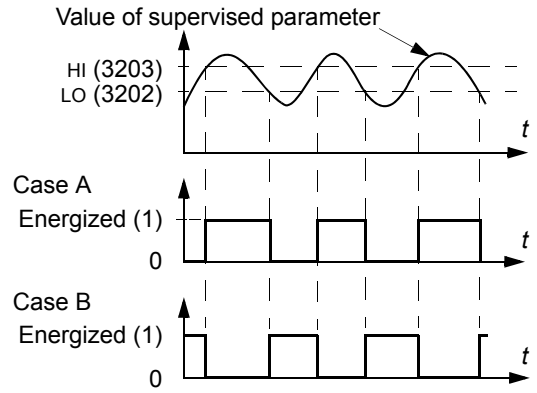

LO > HI
Note: Case LO>HI represents a special hysteresis with two separate supervision limits.

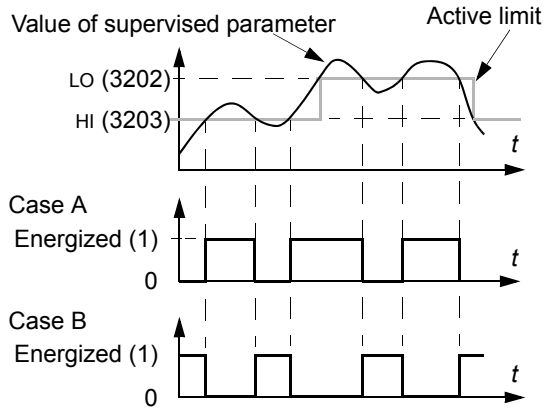

Code	Description
3207	**SUPERV 3 PARAM** Selects the third supervised parameter. See 3201 SUPERV 1 PARAM above.
3208	**SUPERV 3 LIM LO** Sets the low limit for the third supervised parameter. See 3207 SUPERV 3 PARAM above.
3209	**SUPERV 3 LIM HI** Sets the high limit for the third supervised parameter. See 3207 SUPERV 3 PARAM above.

Group 33: INFORMATION

This group provides access to information about the drive's current programs: versions and test date.

Code	Description
3301	**FIRMWARE** Contains the version of the drive's firmware.
3302	**LOADING PACKAGE** Contains the version of the loading package.
3303	**TEST DATE** Contains the test date (yy.ww).
3304	**DRIVE RATING** Indicates the drive's current and voltage rating. The format is XXXY, where: • XXX = The nominal current rating of the drive in amperes. If present, an "A" indicates a decimal point in the rating for the current. For example XXX = 8A8 indicates a nominal current rating of 8.8 A. • Y = The voltage rating of the drive, where Y = : • 2 indicates a 208…240 V rating. • 4 indicates a 380…480 V rating. • 6 indicates a 500…600 V rating.
3305	**PARAMETER TABLE** Contains the version of the parameter table used in the drive.

Group 34: PANEL DISPLAY

This group defines the content for control panel display (middle area), when the control panel is in the Output mode.

Code	Description	
3401	**SIGNAL1 PARAM** Selects the first parameter (by number) displayed on the control panel. • Definitions in this group define display content when the control panel is in the control mode. • Any parameter number in *Group 01: OPERATING DATA* can be selected. • Using the following parameters, the display value can be scaled, converted to convenient units and/or displayed as a bar graph. • The figure identifies selections made by parameters in this group. • If just one or two parameters are selected for display, that is just one or two of the values of parameters 3401 SIGNAL1 PARAM, 3408 SIGNAL2 PARAM and 3415 SIGNAL3 PARAM are other than 100 (NOT SELECTED), the number and name of each displayed parameter are shown in addition to the value. 100 = NOT SELECTED – First parameter not displayed. 101…178 – Displays parameter 0101…0178. If parameter does not exist, the display shows "n.a.".	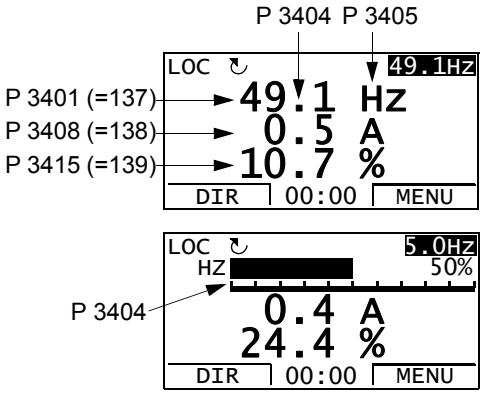
3402	**SIGNAL1 MIN** Defines the minimum expected value for the first display parameter. Use parameters 3402, 3403, 3406 and 3407, for example to convert a *Group 01: OPERATING DATA* parameter, such as 0102 SPEED (in rpm) to the speed of a conveyor driven by the motor (in ft/min). For such a conversion, the source values in the figure are the min. and max. motor speed, and the display values are the corresponding min. and max. conveyor speed. Use parameter 3405 to select the proper units for the display. **Note:** Selecting units does not convert values. Parameter is not effective if parameter 3404 OUTPUT1 DSP FORM = 9 (DIRECT).	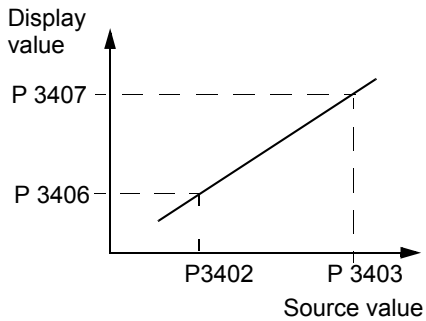
3403	**SIGNAL1 MAX** Defines the maximum expected value for the first display parameter. **Note:** Parameter is not effective if parameter 3404 OUTPUT1 DSP FORM = 9 (DIRECT).	
3404	**OUTPUT1 DSP FORM** Defines the decimal point location for the first display parameter. 0…7 – Defines the decimal point location. • Enter the number of digits desired to the right of the decimal point. • See the table for an example using pi (3.14159). 8 = BAR METER – Specifies a bar meter display. 9 = DIRECT – Decimal point location and units of measure are identical to the source signal. See *Group 01: OPERATING DATA* parameter listing in section *Complete parameter list* on page *87* for resolution (which indicates the decimal point location) and the units of measure.	

3404 value	Display	Range
0	± 3	-32768…+32767 (Signed)
1	± 3.1	
2	± 3.14	
3	± 3.142	
4	3	0…65535 (Unsigned)
5	3.1	
6	3.14	
7	3.142	
8	Bar meter displayed.	
9	Decimal point location and units as for the source signal.	

Code	Description
3405	**OUTPUT1 UNIT** Selects the units used with the first display parameter. **Note:** Parameter is not effective if parameter 3404 OUTPUT1 DSP FORM = 9 (DIRECT). 0 = NO UNIT, 9 = °C, 18 = MWh, 27 = ft, 36 = l/s, 45 = Pa, 54 = lb/m, 63 = Mrev 1 = A, 10 = lb ft, 19 = m/s, 28 = MGD, 37 = l/min, 46 = GPS, 55 = lb/h, 64 = d 2 = V, 11 = mA, 20 = m^3/h, 29 = inHg, 38 = l/h, 47 = gal/s, 56 = FPS, 65 = inWC 3 = Hz, 12 = mV, 21 = dm^3/s, 30 = FPM, 39 = m^3/s, 48 = gal/m, 57 = ft/s, 66 = m/min 4 = %, 13 = kW, 22 = bar, 31 = kb/s, 40 = m^3/m, 49 = gal/h, 58 = inH_2O, 67 = Nm 5 = s, 14 = W, 23 = kPa, 32 = kHz, 41 = kg/s, 50 = ft^3/s, 59 = in wg, 68 = Km^3/h 6 = h, 15 = kWh, 24 = GPM, 33 = ohm, 42 = kg/m, 51 = ft^3/m, 60 = ft wg 7 = rpm, 16 = °F, 25 = PSI, 34 = ppm, 43 = kg/h, 52 = ft^3/h, 61 = lbsi 8 = kh, 17 = hp, 26 = CFM, 35 = pps, 44 = mbar, 53 = lb/s, 62 = ms The following units are useful for the bar display. 117 = %ref, 119 = %dev, 121 = % SP, 123 = Iout, 125 = Fout, 127 = Vdc 118 = %act, 120 = % LD, 122 = %FBK, 124 = Vout, 126 = Tout
3406	**OUTPUT1 MIN** Sets the minimum value displayed for the first display parameter. **Note:** Parameter is not effective if parameter 3404 OUTPUT1 DSP FORM = 9 (DIRECT).
3407	**OUTPUT1 MAX** Sets the maximum value displayed for the first display parameter. **Note:** Parameter is not effective if parameter 3404 OUTPUT1 DSP FORM = 9 (DIRECT).
3408	**SIGNAL2 PARAM** Selects the second parameter (by number) displayed on the control panel. See parameter 3401.
3409	**SIGNAL2 MIN** Defines the minimum expected value for the second display parameter. See parameter 3402.
3410	**SIGNAL2 MAX** Defines the maximum expected value for the second display parameter. See parameter 3403.
3411	**OUTPUT2 DSP FORM** Defines the decimal point location for the second display parameter. See parameter 3404.
3412	**OUTPUT2 UNIT** Selects the units used with the second display parameter. See parameter 3405.
3413	**OUTPUT2 MIN** Sets the minimum value displayed for the second display parameter. See parameter 3406.
3414	**OUTPUT2 MAX** Sets the maximum value displayed for the second display parameter. See parameter 3407.
3415	**SIGNAL3 PARAM** Selects the third parameter (by number) displayed on the control panel. See parameter 3401.
3416	**SIGNAL3 MIN** Defines the minimum expected value for the third display parameter. See parameter 3402.
3417	**SIGNAL3 MAX** Defines the maximum expected value for the third display parameter. See parameter 3403.
3418	**OUTPUT3 DSP FORM** Defines the decimal point location for the third display parameter. See parameter 3404.
3419	**OUTPUT3 UNIT** Selects the units used with the third display parameter. See parameter 3405.
3420	**OUTPUT3 MIN** Sets the minimum value displayed for the third display parameter. See parameter 3406.

Code	Description
3421	**OUTPUT3 MAX** Sets the maximum value displayed for the third display parameter. See parameter 3407.

Group 35: MOTOR TEMP MEAS

This group defines the detection and reporting for a particular potential fault – motor overheating, as detected by a temperature sensor. Typical connections are shown below.

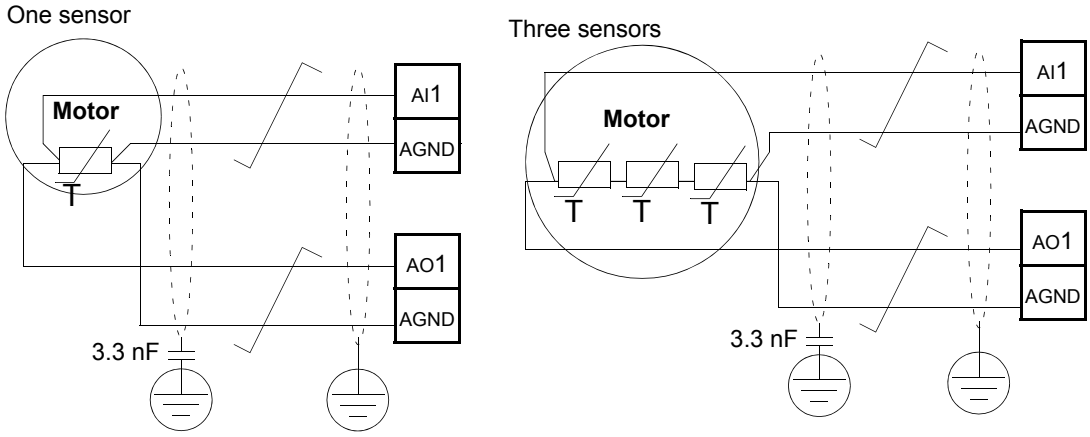

WARNING! IEC 60664 requires double or reinforced insulation between live parts and the surface of accessible parts of electrical equipment which are either non-conductive or conductive but not connected to the protective earth.

To fulfil this requirement, connect a thermistor (and other similar components) to the drive's control terminals using any of these alternatives:

- Separate the thermistor from live parts of the motor with double reinforced insulation.
- Protect all circuits connected to the drive's digital and analog inputs. Protect against contact, and insulate from other low voltage circuits with basic insulation (rated for the same voltage level as the drive's main circuit).
- Use an external thermistor relay. The relay insulation must be rated for the same voltage level as the drive's main circuit.

The figure below shows thermistor relay and PTC sensor connections using a digital input. At the motor end, the cable shield should be earthed through, eg a 3.3 nF capacitor. If this is not possible, leave the shield unconnected.

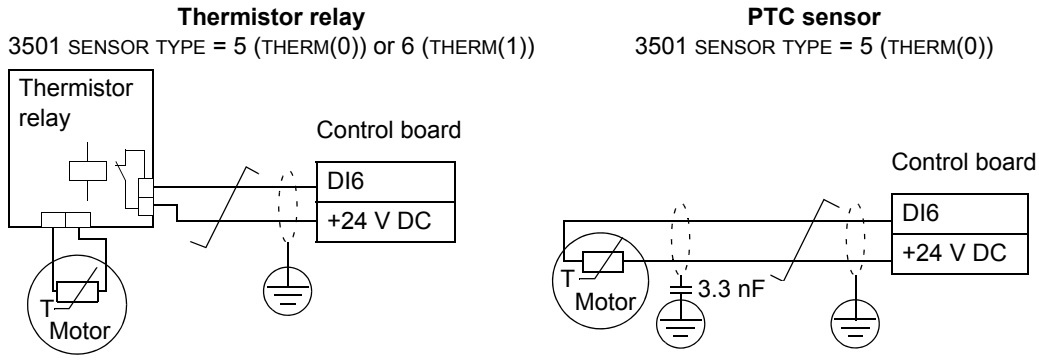

For other faults, or for anticipating motor overheating using a model, see *Group 30: FAULT FUNCTIONS*.

<table>
<tr><th>Code</th><th>Description</th></tr>
<tr><td>3501</td><td>

SENSOR TYPE

Identifies the type of the motor temperature sensor used, PT100 (°C), PTC (ohm) or thermistor.

See parameters 1501 AO1 CONTENT SEL and 1507 AO2 CONTENT SEL.

0 = NONE

1 = 1 x PT100 – Sensor configuration uses one PT100 sensor.
- Analog output AO1 or AO2 feeds constant current through the sensor.
- The sensor resistance increases as the motor temperature rises, as does the voltage over the sensor.
- The temperature measurement function reads the voltage through analog input AI1 or AI2 and converts it to degrees Celsius.

2 = 2 x PT100 – Sensor configuration uses two PT100 sensors.
- Operation is the same as for above 1 x PT100.

3 = 3 x PT100 – Sensor configuration uses three PT100 sensors.
- Operation is the same as for above 1 x PT100.

4 = PTC – Sensor configuration uses one PTC.
- The analog output feeds a constant current through the sensor.
- The resistance of the sensor increases sharply as the motor temperature rises over the PTC reference temperature (T_{ref}), as does the voltage over the resistor. The temperature measurement function reads the voltage through analog input AI1 and converts it into ohms.
- The table below and the graph show typical PTC sensor resistance as a function of the motor operating temperature.

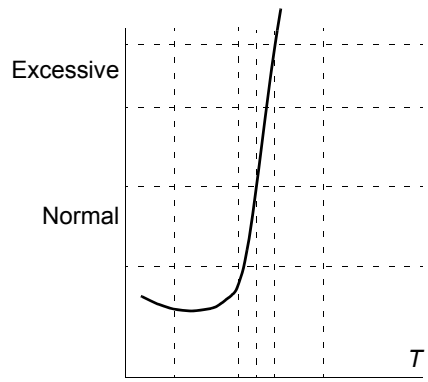

Temperature	Resistance
Normal	< 1.5 kohm
Excessive	> 4 kohm

5 = THERM(0) – Sensor configuration uses a thermistor.
- Motor thermal protection is activated through a digital input. Connect either a PTC sensor or a normally closed thermistor relay to a digital input.
- When the digital input is '0', the motor is overheated.
- See the connection figure on page *155*.
- The table below and the graph show the resistance requirements for a PTC sensor connected between 24 V and a digital input as a function of the motor operating temperature.

Temperature	Resistance
Normal	< 3 kohm
Excessive	> 28 kohm

6 = THERM(1) – Sensor configuration uses a thermistor.
- Motor thermal protection is activated through a digital input. Connect a normally open thermistor relay to a digital input.
- When the digital input is '1', the motor is overheated.
- See the connection figure on page *155*.

</td></tr>
<tr><td>3502</td><td>

INPUT SELECTION

Defines the input used for the temperature sensor.

1 = AI1 – PT100 and PTC.

2 = AI2 – PT100 and PTC.

3…8 = DI1…DI6 – Thermistor and PTC

</td></tr>
<tr><td>3503</td><td>

ALARM LIMIT

Defines the alarm limit for motor temperature measurement.
- At motor temperatures above this limit, the drive displays an alarm (2010, MOTOR TEMP)

For thermistors or PTC connected to a digital input:

0 – de-activated

1 – activated

</td></tr>
</table>

Code	Description
3504	**FAULT LIMIT** Defines the fault limit for motor temperature measurement. • At motor temperatures above this limit, the drive displays a fault (9, MOT OVERTEMP) and stops the drive. For thermistors or PTC connected to a digital input: 0 – de-activated 1 – activated

Group 36: TIMED FUNCTIONS

This group defines the timed functions. The timed functions include:

- four daily start and stop times
- four weekly start, stop and boost times
- four timers for collecting selected periods together.

A timer can be connected to multiple time periods and a time period can be in multiple timers.

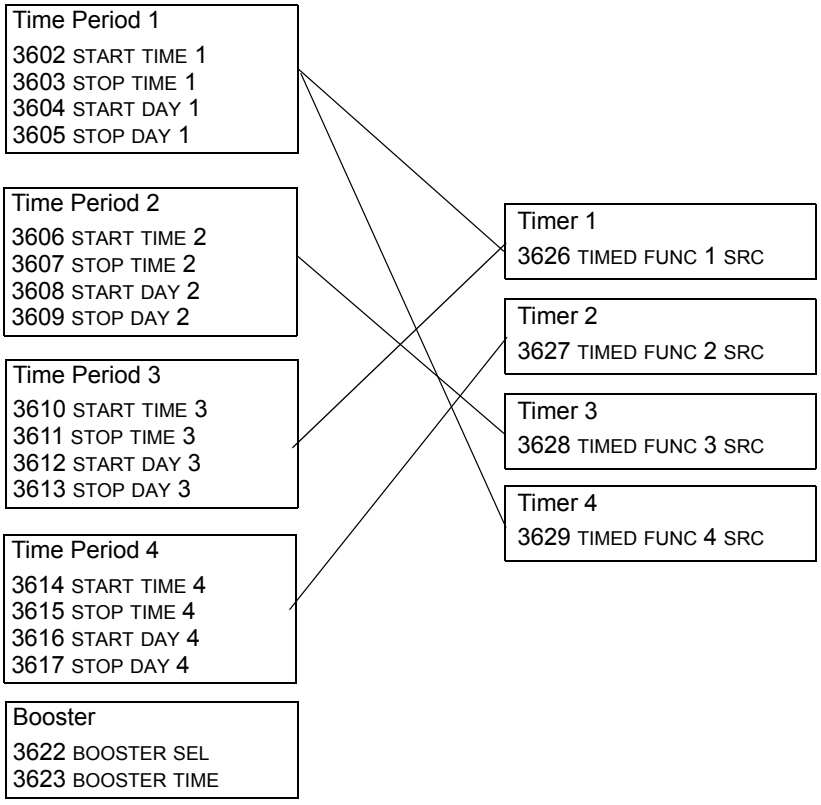

A parameter can be connected to only one timer.

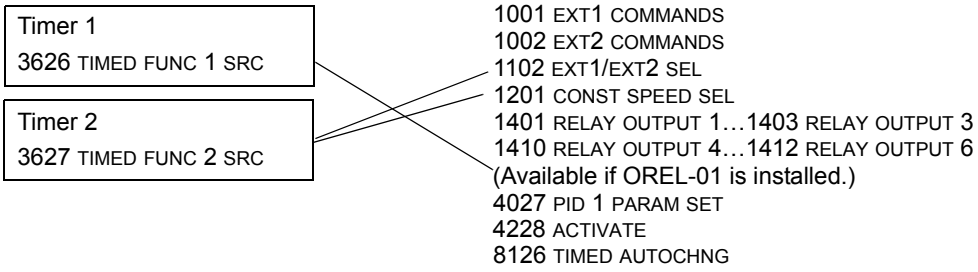

You can use the Timed functions assistant for easy configuring. For more information on the assistants, see section *Assistants mode* on page *53*.

Code	Description
3601	**TIMERS ENABLE** Selects the source for the timer enable signal. 0 = NOT SEL – Timed functions are disabled. 1 = DI1 – Defines digital input DI1 as the timed function enable signal. • The digital input must be activated to enable the timed function. 2…6 = DI2…DI6 – Defines digital input DI2…DI6 as the timed function enable signal. 7 = ACTIVE – Timed functions are enabled. -1 = DI1(INV) – Defines an inverted digital input DI1 as the timed function enable signal. • This digital input must be de-activated to enable the timed function. • -2…-6 = DI2(INV)…DI6(INV) – Defines an inverted digital input DI2…DI6 as the timed function enable signal.
3602	**START TIME 1** Defines the daily start time. • The time can be changed in steps of 2 seconds. • If parameter value is 07:00:00, the timer is activated at 7 a.m. • The figure shows multiple timers on different weekdays. 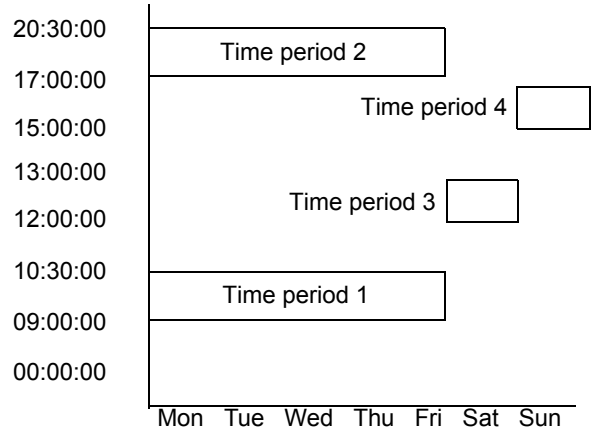
3603	**STOP TIME 1** Defines the daily stop time. • The time can be changed in steps of 2 seconds. • If the parameter value is 09:00:00, the timer is deactivated at 9 a.m.
3604	**START DAY 1** Defines the weekly start day. 1 = MONDAY…7 = SUNDAY • If parameter value is 1, timer 1 weekly is active from Monday midnight (00:00:00).
3605	**STOP DAY 1** Defines weekly stop day. 1 = MONDAY…7 = SUNDAY • If parameter value is 5, timer 1 weekly is deactivated on Friday midnight (23:59:58).
3606	**START TIME 2** Defines timer2 daily start time. • See parameter 3602.
3607	**STOP TIME 2** Defines timer 2 daily stop time. • See parameter 3603.
3608	**START DAY 2** Defines timer 2 weekly start day. • See parameter 3604.
3609	**STOP DAY 2** Defines timer 2 weekly stop day. • See parameter 3605.
3610	**START TIME 3** Defines timer 3 daily start time. • See parameter 3602.
3611	**STOP TIME 3** Defines timer 3 daily stop time. • See parameter 3603.

Code	Description
3612	**START DAY 3** Defines timer 3 weekly start day. • See parameter 3604.
3613	**STOP DAY 3** Defines timer 3 weekly stop day. • See parameter 3605.
3614	**START TIME 4** Defines timer 4 daily start time. • See parameter 3602.
3615	**STOP TIME 4** Defines timer 4 daily stop time. • See parameter 3603.
3616	**START DAY 4** Defines timer 4 weekly start day. • See parameter 3604.
3617	**STOP DAY 4** Defines timer 4 weekly stop day. • See parameter 3605.
3622	**BOOSTER SEL** Selects the source for the booster signal. 0 = NOT SEL – Booster signal is disabled. 1 = DI1 – Defines DI1 as the booster signal. 2…6 = DI2…DI6 – Defines DI2…DI6 as the booster signal. -1 = DI1(INV) – Defines an inverted digital input DI1 as the booster signal. -2…-6 = DI2(INV)…DI6(INV) – Defines an inverted digital input DI2…DI6 as the booster signal.
3623	**BOOSTER TIME** Defines the booster ON time. Time is started when booster sel signal is released. If parameter value is 01:30:00, booster is active for 1 hour and 30 minutes after activation DI is released. 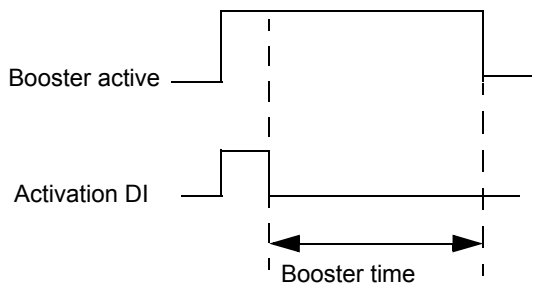
3626	**TIMED FUNC 1 SRC** Defines the time periods used by the timer. 0 = NOT SEL – No time periods have been selected. 1 = T1 – Time Period 1 selected in the timer. 2 = T2 – Time Period 2 selected in the timer. 3 = T1+T2 – Time Periods 1 and 2 selected in the timer. 4 = T3 – Time Period 3 selected in the timer. 5 = T1+T3 – Time Periods 1 and 3 selected in the timer. 6 = T2+T3 – Time Periods 2 and 3 selected in the timer. 7 = T1+T2+T3 – Time Periods 1, 2 and 3 selected in the timer. 8 = T4 – Time Period 4 selected in the timer. 9 = T1+T4 – Time Periods 1 and 4 selected in the timer. 10 = T2+T4 – Time Periods 2 and 4 selected in the timer. 11 = T1+T2+T4 – Time Periods 1, 2 and 4 selected in the timer. 12 = T3+T4 – Time Periods 3 and 4 selected in the timer. 13 = T1+T3+T4 – Time Periods 1, 3 and 4 selected in the timer. 14 = T2+T3+T4 – Time Periods 2, 3 and 4 selected in the timer. 15 = T1+T2+T3+T4 – Time Periods 1, 2, 3 and 4 selected in the timer. 16 = BOOSTER – Booster selected in the timer. 17 = T1+B – Booster and Time Period 1 selected in the timer. 18 = T2+B – Booster and Time Period 2 selected in the timer. 19 = T1+T2+B – Booster and Time Periods 1 and 2 selected in the timer. 20 = T3+B – Booster and Time Period 3 selected in the timer.

Code	Description
	21 = T1+T3+B – Booster and Time Periods 1 and 3 selected in the timer. 22 = T2+T3+B – Booster and Time Periods 2 and 3 selected in the timer. 23 = T1+T2+T3+B – Booster and Time Periods 1, 2 and 3 selected in the timer. 24 = T4+B – Booster and Time Period 4 selected in the timer. 25 = T1+T4+B – Booster and Time Periods 1 and 4 selected in the timer. 26 = T2+T4+B – Booster and Time Periods 2 and 4 selected in the timer. 27 = T1+T2+T4+B – Booster and Time Periods 1, 2 and 4 selected in the timer. 28 = T3+T4+B – Booster and Time Periods 3 and 4 selected in the timer. 29 = T1+T3+T4+B – Booster and Time Periods 1, 3 and 4 selected in the timer. 30 = T2+T3+T4+B – Booster and Time Periods 2, 3 and 4 selected in the timer. 31 = T1+2+3+4+B – Booster and Time Periods 1, 2, 3 and 4 selected in the timer.
3627	**TIMED FUNC 2 SRC** • See parameter 3626.
3628	**TIMED FUNC 3 SRC** • See parameter 3626.
3629	**TIMED FUNC 4 SRC** • See parameter 3626.

Group 37: USER LOAD CURVE

This group defines supervision of user adjustable load curves (motor torque as a function of frequency). The curve is defined by five points.

Code	Description
3701	**USER LOAD C MODE** Supervision mode for the user adjustable load curves. This functionality replaces the former underload supervision in *Group 30: FAULT FUNCTIONS*. To emulate it, see section *Correspondence with the obsolete underload supervision* on page *163*. 0 = NOT SEL – Supervision is not active. 1 = UNDERLOAD – Supervision for the torque dropping below the underload curve. 2 = OVERLOAD – Supervision for the torque exceeding the overload curve. 3 = BOTH – Supervision for the torque dropping below the underload curve or exceeding the overload curve. 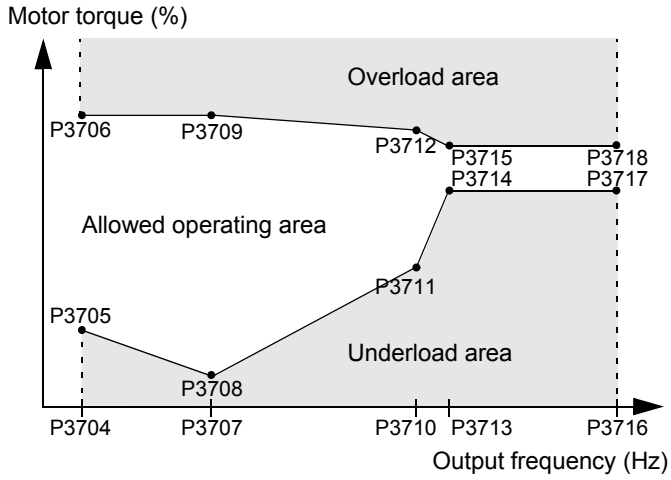
3702	**USER LOAD C FUNC** Action wanted during load supervision. 1 = FAULT – A fault is generated when the condition defined by 3701 USER LOAD C MODE has been valid longer than the time set by 3703 USER LOAD C TIME. 2 = ALARM – An alarm is generated when the condition defined by 3701 USER LOAD C MODE has been valid longer than half of the time defined by 3703 USER LOAD C TIME.
3703	**USER LOAD C TIME** Defines the time limit for generating a fault. • Half of this time is used as the limit for generating an alarm.
3704	**LOAD FREQ 1** Defines the frequency value of the first load curve definition point. • Must be smaller than 3707 LOAD FREQ 2.
3705	**LOAD TORQ LOW 1** Defines the torque value of the first underload curve definition point. • Must be smaller than 3706 LOAD TORQ HIGH 1.
3706	**LOAD TORQ HIGH 1** Defines the torque value of the first overload curve definition point.
3707	**LOAD FREQ 2** Defines the frequency value of the second load curve definition point. • Must be smaller than 3710 LOAD FREQ 3.
3708	**LOAD TORQ LOW 2** Defines the torque value of the second underload curve definition point. • Must be smaller than 3709 LOAD TORQ HIGH 2.
3709	**LOAD TORQ HIGH 2** Defines the torque value of the second overload curve definition point.
3710	**LOAD FREQ 3** Defines the frequency value of the third load curve definition point. • Must be smaller than 3713 LOAD FREQ 4.
3711	**LOAD TORQ LOW 3** Defines the torque value of the third underload curve definition point. • Must be smaller than 3712 LOAD TORQ HIGH 3.
3712	**LOAD TORQ HIGH 3** Defines the torque value of the third overload curve definition point.

Code	Description
3713	**LOAD FREQ 4** Defines the frequency value of the fourth load curve definition point. • Must be smaller than 3716 LOAD FREQ 5
3714	**LOAD TORQ LOW 4** Defines the torque value of the fourth underload curve definition point. • Must be smaller than 3715 LOAD TORQ HIGH 4.
3715	**LOAD TORQ HIGH 4** Defines the torque value of the fourth overload curve definition point.
3716	**LOAD FREQ 5** Defines the frequency value of fifth load curve definition point.
3717	**LOAD TORQ LOW 5** Defines the torque value of the fifth underload curve definition point. • Must be smaller than 3718 LOAD TORQ HIGH 5.
3718	**LOAD TORQ HIGH 5** Defines the torque value of the fifth overload curve definition point.

Correspondence with the obsolete underload supervision

The now obsolete parameter 3015 UNDERLOAD CURVE provided five selectable curves shown in the figure. The parameter characteristics were as described below.

- If the load drops below the set curve for longer than the time set by parameter 3014 UNDERLOAD TIME (obsolete), the underload protection is activated.
- Curves 1…3 reach maximum at the motor rated frequency set by parameter 9907 MOTOR NOM FREQ.
- T_M = nominal torque of the motor.
- f_N = nominal frequency of the motor.

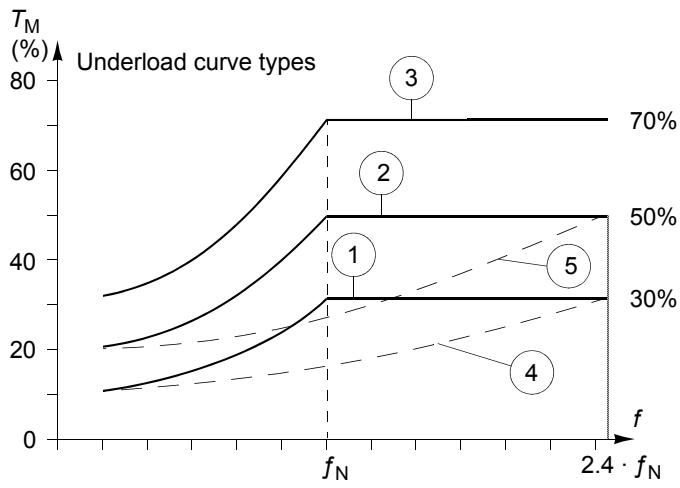

If you want to emulate the behavior of an old underload curve with parameters as in the shaded columns, set the new parameters as in the white columns in the two tables below:

Underload supervision with parameters 3013…3015 (obsolete)	Obsolete parameters		New parameters		
	3013 UNDERLOAD FUNCTION	3014 UNDERLOAD TIME	3701 USER LOAD C MODE	3702 USER LOAD C FUNC	3703 USER LOAD C TIME
No underload functionality	0	-	0	-	-
Underload curve, fault generated	1	t	1	1	t
Underload curve, alarm generated	2	t	1	2	2 · t

Obs. par.	New parameters														
3015 UNDER LOAD CURVE	3704 LOAD FREQ 1 (Hz)		3705 LOAD TORQ LOW 1 (%)	3707 LOAD FREQ 2 (Hz)		3708 LOAD TORQ LOW 2 (%)	3710 LOAD FREQ 3 (Hz)		3711 LOAD TORQ LOW 3 (%)	3713 LOAD FREQ 4 (Hz)		3714 LOAD TORQ LOW 4 (%)	3716 LOAD FREQ 5 (Hz)		3717 LOAD TORQ LOW 5 (%)
	EU	US		EU	US		EU	US		EU	US		EU	US	
1	5	6	10	32	38	17	41	50	23	50	60	30	500	500	30
2	5	6	20	31	37	30	42	50	40	50	60	50	500	500	50
3	5	6	30	31	37	43	42	50	57	50	60	70	500	500	70
4	5	6	10	73	88	17	98	117	23	120	144	30	500	500	30
5	5	6	20	71	86	30	99	119	40	120	144	50	500	500	50

Group 40: PROCESS PID SET 1

This group defines a set of parameters used with the Process PID (PID1) controller.

Typically only parameters in this group are needed.

PID controller – Basic set-up

In PID control mode, the drive compares a reference signal (setpoint) to an actual signal (feedback) and automatically adjusts the speed of the drive to match the two signals. The difference between the two signals is the error value.

Typically PID control mode is used, when the speed of a motor needs to be controlled based on pressure, flow or temperature. In most cases – when there is only 1 transducer signal wired to the ACS550 – only parameter group 40 is needed.

The following is a schematic of setpoint/feedback signal flow using parameter group 40.

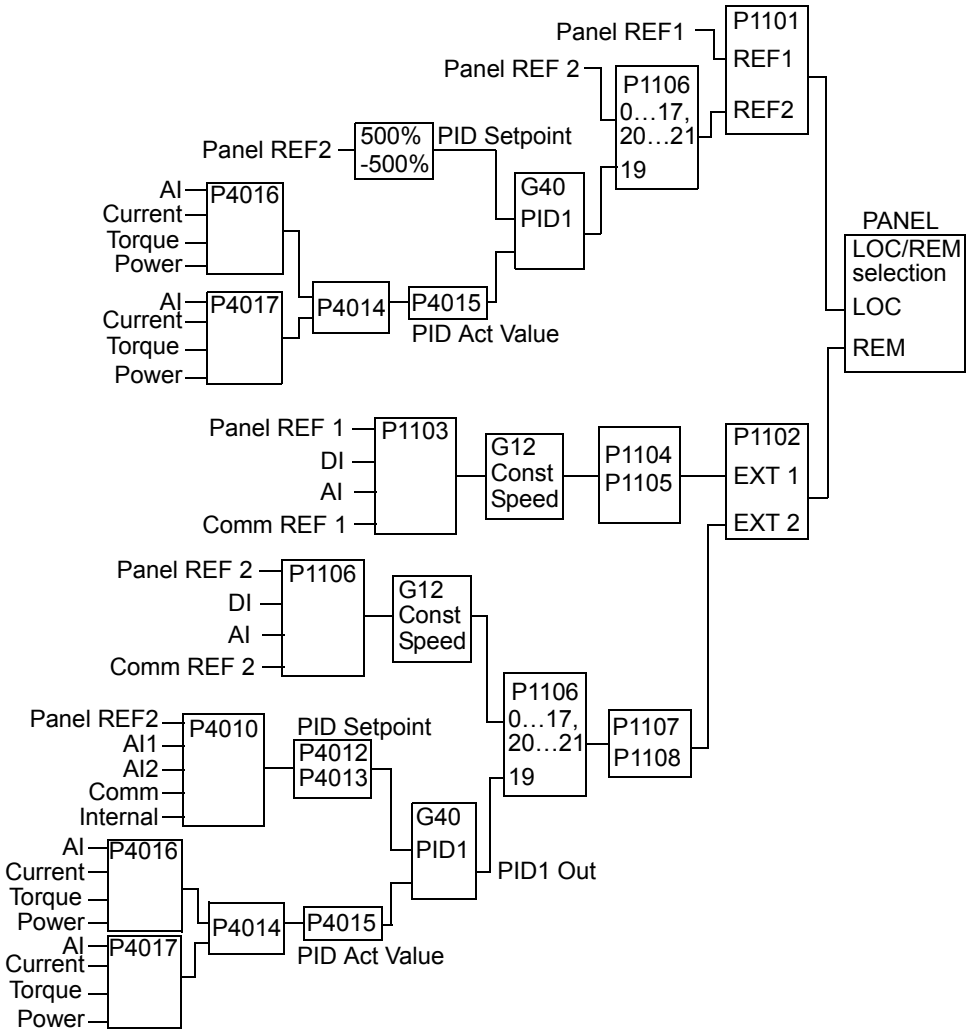

Note: In order to activate and use the PID controller, parameter 1106 must be set to value 19.

PID controller – Advanced

The ACS550 has two separate PID controllers:

- Process PID (PID1) and
- External PID (PID2)

Process PID (PID1) has 2 separate sets of parameters:

- Process PID (PID1) SET1, defined in *Group 40: PROCESS PID SET 1* and
- Process PID (PID1) SET2, defined in *Group 41: PROCESS PID SET 2*

You can select between the two different sets by using parameter 4027.

Typically two different PID controller sets are used when the load of the motor changes considerably from one situation to another.

You can use External PID (PID2), defined in *Group 42: EXT / TRIM PID*, in two different ways:

- Instead of using additional PID controller hardware, you can set outputs of the ACS550 to control a field instrument like a damper or a valve. In this case, set parameter 4230 to value 0. (0 is the default value.)
- You can use External PID (PID2) to trim or fine-tune the speed of the ACS550.

Code	Description
4001	**GAIN** Defines the PID controller's gain. • The setting range is 0.1… 100. • At 0.1, the PID controller output changes one-tenth as much as the error value. • At 100, the PID controller output changes one hundred times as much as the error value. Use the proportional gain and integration time values to adjust the responsiveness of the system. • A low value for proportional gain and a high value for integral time ensures stable operation, but provides sluggish response. If the proportional gain value is too large or the integral time too short, the system can become unstable. Procedure: • Initially, set: • 4001 GAIN = 0.1. • 4002 INTEGRATION TIME = 20 seconds. • Start the system and see if it reaches the setpoint quickly while maintaining stable operation. If not, increase GAIN (4001) until the actual signal (or drive speed) oscillates constantly. It may be necessary to start and stop the drive to induce this oscillation. • Reduce GAIN (4001) until the oscillation stops. • Set GAIN (4001) to 0.4 to 0.6 times the above value. • Decrease the INTEGRATION TIME (4002) until the feedback signal (or drive speed) oscillates constantly. It may be necessary to start and stop the drive to induce this oscillation. • Increase INTEGRATION TIME (4002) until the oscillation stops. • Set INTEGRATION TIME (4002) to 1.15 to 1.5 times the above value. • If the feedback signal contains high frequency noise, increase the value of parameter 1303 FILTER AI1 or 1306 FILTER AI2 until the noise is filtered from the signal.

Code	Description
4002	**INTEGRATION TIME** Defines the PID controller's integration time. Integration time is, by definition, the time required to increase the output by the error value: • Error value is constant and 100%. • Gain = 1. • Integration time of 1 second denotes that a 100% change is achieved in 1 second. 0.0 = NOT SEL – Disables integration (I-part of controller). 0.1…3600.0 – Integration time (seconds). • See 4001 for adjustment procedure. 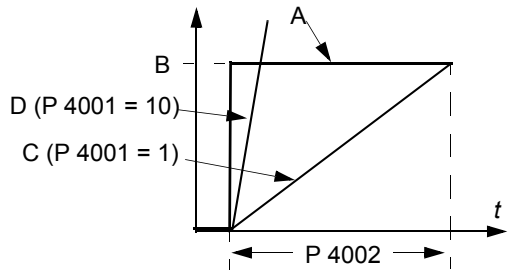 A = Error B = Error value step C = Controller output with Gain = 1 D = Controller output with Gain = 10
4003	**DERIVATION TIME** Defines the PID controller's derivation time. • You can add the derivative of the error to the PID controller output. The derivative is the error value's rate of change. For example, if the process error value changes linearly, the derivative is a constant added to the PID controller output. • The error-derivative is filtered with a 1-pole filter. The time constant of the filter is defined by parameter 4004 PID DERIV FILTER. 0.0…10.0 – Derivation time (seconds). 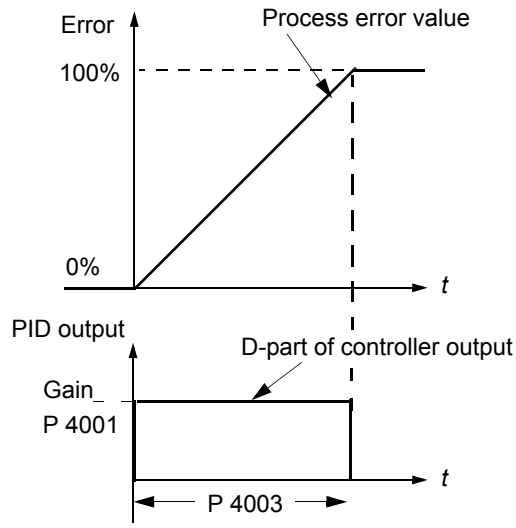
4004	**PID DERIV FILTER** Defines the filter time constant for the error-derivative part of the PID controller output. • Before being added to the PID controller output, the error-derivative is filtered with a 1-pole filter. • Increasing the filter time smooths the error-derivative, reducing noise. 0.0…10.0 – Filter time constant (seconds).
4005	**ERROR VALUE INV** Selects either a normal or inverted relationship between the feedback signal and the drive speed. 0 = NO – Normal, a decrease in feedback signal increases drive speed. Error = Ref - Fbk 1 = YES – Inverted, a decrease in feedback signal decreases drive speed. Error = Fbk - Ref
4006	**UNITS** Selects the unit for the PID controller actual values. (PID1 parameters 0128, 0130 and 0132). • See parameter 3405 for list of available units.
4007	**UNIT SCALE** Defines the decimal point location in PID controller actual values. • Enter the decimal point location counting in from the right end of the entry. • See the table for an example using pi (3.14159).

4007 value	Entry	Display
0	00003	3
1	00031	3.1
2	00314	3.14
3	03142	3.142
4	31416	3.1416

Code	Description
4008	**0% VALUE** Defines (together with the next parameter) the scaling applied to the PID controller's actual values (PID1 parameters 0128, 0130 and 0132). • Units and scale are defined by parameters 4006 and 4007.
4009	**100% VALUE** Defines (together with the previous parameter) the scaling applied to the PID controller's actual values. • Units and scale are defined by parameters 4006 and 4007.
4010	**SET POINT SEL** Defines the reference signal source for the PID controller. • Parameter has no significance when the PID regulator is by-passed (see 8121 REG BYPASS CTRL). 0 = KEYPAD – Control panel provides reference. 1 = AI1 – Analog input 1 provides reference. 2 = AI2 – Analog input 2 provides reference. 8 = COMM – Fieldbus provides reference. 9 = COMM+AI1 – Defines a fieldbus and analog input 1 (AI1) combination as the reference source. See Analog input reference correction below. 10 = COMM*AI1 – Defines a fieldbus and analog input 1 (AI1) combination as the reference source. See Analog input reference correction below. 11 = DI3U,4D(RNC) – Digital inputs, acting as a motor potentiometer control, provide reference. • DI3 increases the speed (the U stands for "up") • DI4 decreases the reference (the D stands for "down"). • Parameter 2205 ACCELER TIME 2 controls the reference signal's rate of change. • R = Stop command resets the reference to zero. • NC = Reference value is not copied. 12 = DI3U,4D(NC) – Same as DI3U,4D(RNC) above, except: • Stop command does not reset reference to zero. At restart the motor ramps up, at the selected acceleration rate, to the stored reference. 13 = DI5U,6D(NC) – Same as DI3U,4D(NC) above, except: • Uses digital inputs DI5 and DI6. 14 = AI1+AI2 – Defines an analog input 1 (AI1) and analog input 2 (AI2) combination as the reference source. See Analog input reference correction below. 15 = AI1*AI2 – Defines an analog input 1 (AI1) and analog input 2 (AI2) combination as the reference source. See Analog input reference correction below. 16 = AI1-AI2 – Defines an analog input 1 (AI1) and analog input 2 (AI2) combination as the reference source. See Analog input reference correction below. 17 = AI1/AI2 – Defines an analog input 1 (AI1) and analog input 2 (AI2) combination as the reference source. See Analog input reference correction below. 19 = INTERNAL – A constant value set using parameter 4011 provides reference. 20 = PID2OUT – Defines PID controller 2 output (parameter 0127 PID 2 OUTPUT) as the reference source.

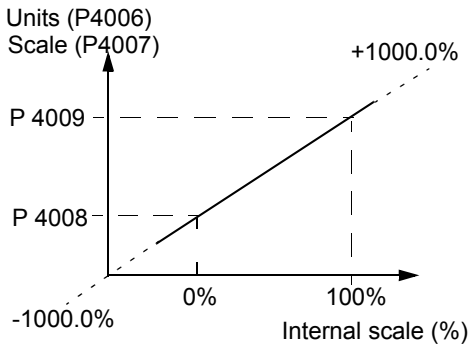

Code	Description
	Analog input reference correction Parameter values 9, 10 and 14…17 use the formula in the following table. Where: • C = Main reference value (= COMM for values 9, 10 and = AI1 for values 14…17) • B = Correcting reference (= AI1 for values 9, 10 and = AI2 for values 14…17). **Example:** The figure shows the reference source curves for value settings 9, 10 and 14…17, where: • C = 25%. • P 4012 SETPOINT MIN = 0. • P 4013 SETPOINT MAX = 0. • B varies along the horizontal axis.

Value setting	Calculation of the AI reference
C + B	C value + (B value - 50% of reference value)
C * B	C value · (B value / 50% of reference value)
C - B	(C value + 50% of reference value) - B value
C / B	(C value · 50% of reference value) / B value

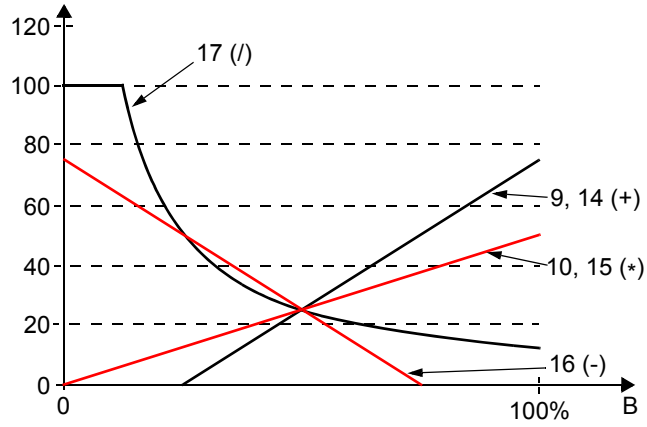

4011	**INTERNAL SETPNT** Sets a constant value used for the process reference. • Units and scale are defined by parameters 4006 and 4007.
4012	**SETPOINT MIN** Sets the minimum value for the reference signal source. • See parameter 4010.
4013	**SETPOINT MAX** Sets the maximum value for the reference signal source. • See parameter 4010.
4014	**FBK SEL** Defines the PID controller feedback (actual signal). • You can define a combination of two actual values (ACT1 and ACT2) as the feedback signal. • Use parameter 4016 to define the source for actual value 1 (ACT1). • Use parameter 4017 to define the source for actual value 2 (ACT2). 1 = ACT1 – Actual value 1 (ACT1) provides the feedback signal. 2 = ACT1-ACT2 – ACT1 minus ACT2 provides the feedback signal. 3 = ACT1+ACT2 – ACT1 plus ACT2 provides the feedback signal. 4 = ACT1*ACT2 – ACT1 times ACT2 provides the feedback signal. 5 = ACT1/ACT2 – ACT1 divided by ACT2 provides the feedback signal. 6 = MIN(ACT1,2) – The smaller of ACT1 or ACT2 provides the feedback signal. 7 = MAX(ACT1,2) – The greater of ACT1 or ACT2 provides the feedback signal. 8 = sqrt(ACT1-2) – Square root of the value for ACT1 minus ACT2 provides the feedback signal. 9 = sqA1+sqA2 – Square root of ACT1 plus the square root of ACT2 provides the feedback signal. 10 = sqrt(ACT1) – Square root of ACT1 provides the feedback signal. 11 = COMM FBK 1 – Signal 0158 PID COMM VALUE 1 provides the feedback signal. 12 = COMM FBK 2 – Signal 0159 PID COMM VALUE 2 provides the feedback signal. 13 = AVE(ACT1,2) – The average of ACT1 and ACT2 provides the feedback signal.
4015	**FBK MULTIPLIER** Defines an extra multiplier for the PID feedback value FBK defined by parameter 4014. • Used mainly in applications where the flow is calculated from the pressure difference. 0.000 = NOT SEL – The parameter has no effect (1.000 used as the multiplier). -32.768…32.767 – Multiplier applied to the signal defined by parameter 4014 FBK SEL. **Example:** $FBK = Multiplier \times \sqrt{A1 - A2}$

Code	Description
4016	**ACT1 INPUT** Defines the source for actual value 1 (ACT1). See also parameter 4018 ACT1 MINIMUM. 1 = AI1 – Uses analog input 1 for ACT1. 2 = AI2 – Uses analog input 2 for ACT1. 3 = CURRENT – Uses current for ACT1. 4 = TORQUE – Uses torque for ACT1. 5 = POWER – Uses power for ACT1. 6 = COMM ACT 1 – Uses value of signal 0158 PID COMM VALUE 1 for ACT1. 7 = COMM ACT 2 – Uses value of signal 0159 PID COMM VALUE 2 for ACT1.
4017	**ACT2 INPUT** Defines the source for actual value 2 (ACT2). See also parameter 4020 ACT2 MINIMUM. 1 = AI1 – Uses analog input 1 for ACT2. 2 = AI2 – Uses analog input 2 for ACT2. 3 = CURRENT – Uses current for ACT2. 4 = TORQUE – Uses torque for ACT2. 5 = POWER – Uses power for ACT2. 6 = COMM ACT 1 – Uses value of signal 0158 PID COMM VALUE 1 for ACT2. 7 = COMM ACT 2 – Uses value of signal 0159 PID COMM VALUE 2 for ACT2.
4018	**ACT1 MINIMUM** Sets the minimum value for ACT1. • Scales the source signal used as the actual value ACT1 (defined by parameter 4016 ACT1 INPUT). For parameter 4016 values 6 (COMM ACT 1) and 7 (COMM ACT 2) scaling is not done. • See the figure: A= Normal; B = Inversion (ACT1 MINIMUM > ACT1 MAXIMUM)

Par 4016	Source	Source min.	Source max.
1	Analog input 1	1301 MINIMUM AI1	1302 MAXIMUM AI1
2	Analog input 2	1304 MINIMUM AI2	1305 MAXIMUM AI2
3	Current	0	2 · nominal current
4	Torque	-2 · nominal torque	2 · nominal torque
5	Power	-2 · nominal power	2 · nominal power

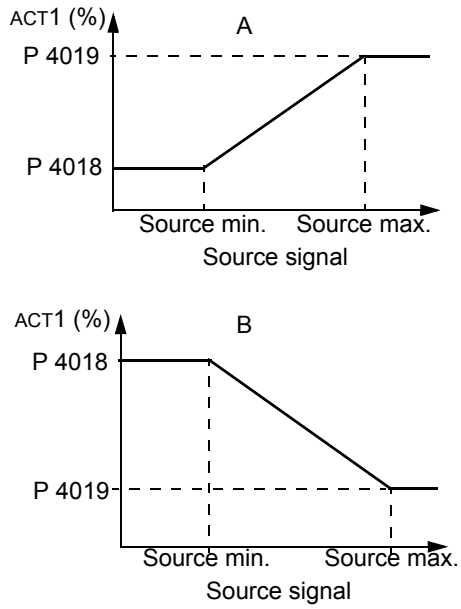

4019	**ACT1 MAXIMUM** Sets the maximum value for ACT1. • See 4018 ACT1 MINIMUM.
4020	**ACT2 MINIMUM** Sets the minimum value for ACT2. • See 4018 ACT1 MINIMUM.
4021	**ACT2 MAXIMUM** Sets the maximum value for ACT2. • See 4018 ACT1 MINIMUM.
4022	**SLEEP SELECTION** Defines the control for the PID sleep function. 0 = NOT SEL– Disables the PID sleep control function. 1 = DI1 – Defines digital input DI1 as the control for the PID sleep function. • Activating the digital input activates the sleep function. • De-activating the digital input restores PID control. 2…6 = DI2…DI6 – Defines digital input DI2…DI6 as the control for the PID sleep function. • See DI1 above. 7 = INTERNAL – Defines the output rpm/frequency, process reference and process actual value as the control for the PID sleep function. Refer to parameters 4025 WAKE-UP DEV and 4023 PID SLEEP LEVEL. -1 = DI1(INV) – Defines an inverted digital input DI1 as the control for the PID sleep function. • De-activating the digital input activates the sleep function. • Activating the digital input restores PID control. -2…-6 = DI2(INV)…DI6(INV) – Defines an inverted digital input DI2…DI6 as the control for the PID sleep function. • See DI1(INV) above.

Code	Description
4023	**PID SLEEP LEVEL** Sets the motor speed / frequency that enables the PID sleep function – a motor speed / frequency below this level, for at least the time period 4024 PID SLEEP DELAY enables the PID sleep function (stopping the drive). • Requires 4022 = 7 (INTERNAL). • See the figure: A = PID output level; B = PID process feedback.
4024	**PID SLEEP DELAY** Sets the time delay for the PID sleep function – a motor speed / frequency below 4023 PID SLEEP LEVEL for at least this time period enables the PID sleep function (stopping the drive). • See 4023 PID SLEEP LEVEL above.
4025	**WAKE-UP DEV** Defines the wake-up deviation – a deviation from the setpoint greater than this value, for at least the time period 4026 WAKE-UP DELAY, re-starts the PID controller. • Parameters 4006 and 4007 define the units and scale. • Parameter 4005 = 0, Wake-up level = Setpoint - Wake-up deviation. • Parameter 4005 = 1, Wake-up level = Setpoint + Wake-up deviation. • Wake-up level can be above or below setpoint. See the figures: • C = Wake-up level when parameter 4005 = 1 • D = Wake-up level when parameter 4005 = 0 • E = Feedback is above wake-up level and lasts longer than 4026 WAKE-UP DELAY – PID function wakes up. • F = Feedback is below wake-up level and lasts longer than 4026 WAKE-UP DELAY – PID function wakes up.
4026	**WAKE-UP DELAY** Defines the wake-up delay – a deviation from the setpoint greater than 4025 WAKE-UP DEV, for at least this time period, re-starts the PID controller.

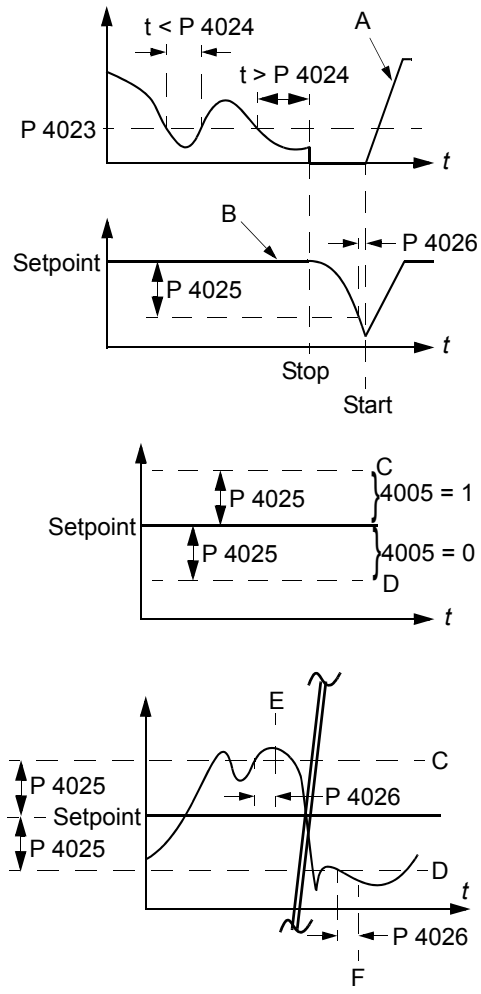

Code	Description
4027	**PID 1 PARAM SET** Process PID (PID1) has two separate sets of parameters, PID set 1 and PID set 2. • PID set 1 uses parameters 4001…4026. • PID set 2 uses parameters 4101…4126. PID 1 PARAM SET defines which set is selected. 0 = SET 1 – PID Set 1 (parameters 4001…4026) is active. 1 = DI1 – Defines digital input DI1 as the control for PID Set selection. • Activating the digital input selects PID Set 2. • De-activating the digital input selects PID Set 1. 2…6 = DI2…DI6 – Defines digital input DI2…DI6 as the control for PID Set selection. • See DI1 above. 7 = SET 2 – PID Set 2 (parameters 4101…4126) is active. 8…11 = TIMED FUNC 1…4 – Defines the Timed function as the control for the PID Set selection (Timed function de-activated = PID Set 1; Timed function activated = PID Set 2) • See *Group 36: TIMED FUNCTIONS*. 12 = 2-ZONE MIN – The drive calculates the difference between setpoint 1 and feedback 1 as well as setpoint 2 and feedback 2. The drive will control the zone (and select the set) that has a larger difference. • A positive difference (a setpoint higher than the feedback) is always larger than a negative difference. This keeps feedback values at or above the setpoint. • Controller does not react to the situation of feedback above setpoint if another zone's feedback is closer to its setpoint. 13 = 2-ZONE MAX – The drive calculates the difference between setpoint 1 and feedback 1 as well as setpoint 2 and feedback 2. The drive will control the zone (and select the set) that has a smaller difference. • A negative difference (a setpoint lower than the feedback) is always smaller than a positive difference. This keeps feedback values at or below the setpoint. • Controller does not react to the situation of feedback below setpoint if another zone's feedback is closer to its setpoint. 14 = 2-ZONE AVE – The drive calculates the difference between setpoint 1 and feedback 1 as well as setpoint 2 and feedback 2. In addition, it calculates the average of the deviations and uses it to control zone 1. Therefore one feedback is kept above its setpoint and another is kept as much below its setpoint. -1 = DI1(INV) – Defines an inverted digital input DI1 as the control for PID Set selection. • Activating the digital input selects PID Set 1. • De-activating the digital input selects PID Set 2. -2…-6 = DI2(INV)…DI6(INV) – Defines an inverted digital input DI2…DI6 as the control for PID Set selection. • See DI1(INV) above.

Group 41: PROCESS PID SET 2

Parameters of this group belong to PID parameter set 2. The operation of parameters 4101…4126 is analogous with set 1 parameters 4001…4026.

PID parameter set 2 can be selected by parameter 4027 PID 1 PARAM SET.

Code	Description
4101 … 4126	See 4001 …4026

Group 42: EXT / TRIM PID

This group defines the parameters used for the second PID controller (PID2), which is used for the External / Trimming PID.

The operation of parameters 4201...4221 is analogous with Process PID set 1 (PID1) parameters 4001…4021.

Code	Description
4201 … 4221	See 4001 …4021
4228	**ACTIVATE** Defines the source for enabling the external PID function. • Requires 4230 TRIM MODE = 0 (NOT SEL). 0 = NOT SEL – Disables external PID control. 1 = DI1 – Defines digital input DI1 as the control for enabling external PID control. • Activating the digital input enables external PID control. • De-activating the digital input disables external PID control. 2…6 = DI2…DI6 – Defines digital input DI2…DI6 as the control for enabling external PID control. • See DI1 above. 7 = DRIVE RUN – Defines the start command as the control for enabling external PID control. • Activating the start command (drive is running) enables external PID control. 8 = ON – Defines the power-on as the control for enabling external PID control. • Activating power to the drive enables external PID control. 9…12 = TIMED FUNC 1…4 – Defines the Timed function as the control for enabling external PID control (Timed function active enables external PID control). • See *Group 36: TIMED FUNCTIONS*. -1 = DI1(INV) – Defines an inverted digital input DI1 as the control for enabling external PID control. • Activating the digital input disables external PID control. • De-activating the digital input enables external PID control. -2…-6 = DI2(INV)…DI6(INV) – Defines an inverted digital input DI2…DI6 as the control for enabling external PID control. • See DI1(INV) above.
4229	**OFFSET** Defines the offset for the PID output. • When PID is activated, output starts from this value. • When PID is deactivated, output resets to this value. • Parameter is active when 4230 TRIM MODE = 0 (trim mode is not active).
4230	**TRIM MODE** Selects the type of trim, if any. Using the trim it is possible to combine a corrective factor to the drive reference. 0 = NOT SEL – Disables the trim function. 1 = PROPORTIONAL – Adds a trim factor that is proportional to the rpm/Hz reference. 2 = DIRECT – Adds a trim factor based on the control loop's maximum limit.
4231	**TRIM SCALE** Defines the multiplier (as a percent, plus or minus) used in the trim mode.

Code	Description
4232	**CORRECTION SRC** Defines the trimming reference for the correction source. 1 = PID2REF – Uses appropriate REF MAX (SWITCH A OR B): • 1105 REF1 MAX when REF1 is active (A). • 1108 REF2 MAX when REF2 is active (B). 2 = PID2OUTPUT – Uses the absolute maximum speed or frequency (Switch C): • 2002 MAXIMUM SPEED if 9904 MOTOR CTRL MODE = 1 (VECTOR:SPEED) or 2 (VECTOR:TORQ). • 2008 MAXIMUM FREQ if 9904 MOTOR CTRL MODE = 3 (SCALAR:FREQ). 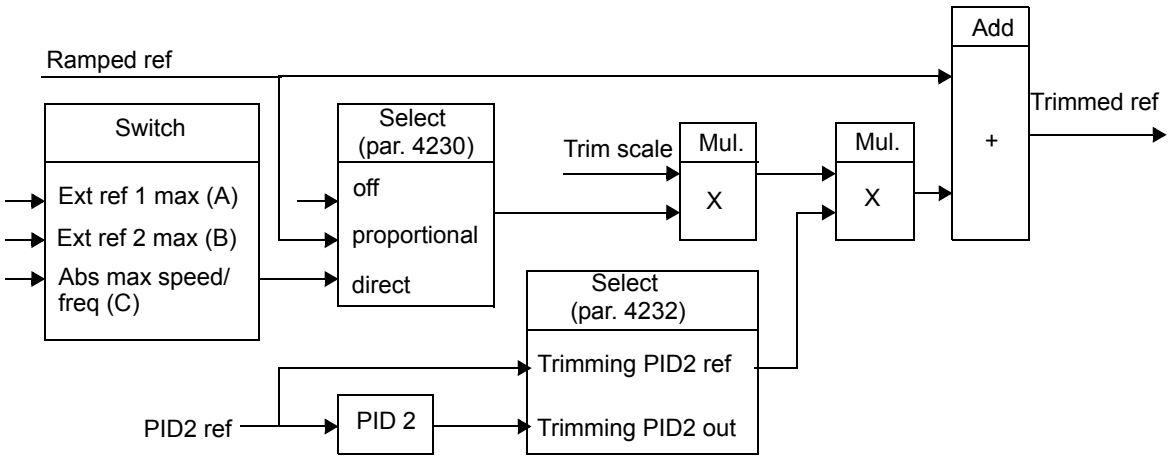

Group 45: ENERGY SAVING

This group defines the setup of calculation and optimization of energy savings.

Note: The values of saved energy parameters 0174 SAVED KWH, 0175 SAVED MWH, 0176 SAVED AMOUNT 1, 0177 SAVED AMOUNT 2 and 0178 SAVED CO2 are derived from subtracting the drive's energy consumed from the direct-on-line (DOL) consumption calculated on the basis of parameter 4508 PUMP POWER. As such, the accuracy of the values is dependent on the accuracy of the power estimate entered in that parameter.

Code	Description
4502	**ENERGY PRICE** Price of energy per kWh. • Used for reference when energy savings are calculated. • See parameters 0174 SAVED KWH, 0175 SAVED MWH, 0176 SAVED AMOUNT 1, 0177 SAVED AMOUNT 2 and 0178 SAVED CO2 (reduction on carbon dioxide emissions in tn).
4507	**CO2 CONV FACTOR** Conversion factor for converting energy into CO2 emissions (kg/kWh or tn/MWh). Used for multiplying the saved energy in MWh to calculate the value of parameter 0178 SAVED CO2 (reduction on carbon dioxide emissions in tn).
4508	**PUMP POWER** Pump power (as a percentage of the nominal motor power) when connected directly to supply (DOL). • Used for reference when energy savings are calculated. • See parameters 0174 SAVED KWH, 0175 SAVED MWH, 0176 SAVED AMOUNT 1, 0177 SAVED AMOUNT 2 and 0178 SAVED CO2. • It is possible to use this parameter as the reference power also for other applications than pumps. The reference power can also be some other constant power than a motor connected directly online.
4509	**ENERGY RESET** Resets energy calculators 0174 SAVED KWH, 0175 SAVED MWH, 0176 SAVED AMOUNT 1, 0177 SAVED AMOUNT 2 and 0178 SAVED CO2.

Group 50: ENCODER

This group defines the setup for encoder use:

- Sets the number of encoder pulses per shaft revolution.
- Enables the encoder operation.
- Defines how mechanical angle and revolution data is reset.

See also *User's Manual for Pulse Encoder Interface Module OTAC-01* (3AUA0000001938 [English]).

Code	Description
5001	**PULSE NR** Sets the number of pulses provided by an optional encoder for each full motor shaft revolution (ppr).
5002	**ENCODER ENABLE** Enables/disables an optional encoder. 0 = DISABLE – Drive uses speed feedback derived from the internal motor model (applies for any setting of parameter 9904 MOTOR CTRL MODE). 1 = ENABLE – Drive uses feedback from an optional encoder. This function requires the Pulse Encoder Interface Module (OTAC-01) and an encoder. Operation depends on the setting of parameter 9904 MOTOR CTRL MODE: • 9904 = 1 (VECTOR:SPEED): The encoder provides improved speed feedback and improved low speed torque accuracy. • 9904 = 2 (VECTOR:TORQ): The encoder provides improved speed feedback and improved low speed torque accuracy. • 9904 = 3 (SCALAR:SPEED): The encoder provides speed feedback. (This is not closed loop speed regulation. However, using parameter 2608 SLIP COMP RATIO and an encoder improves steady state speed accuracy.)
5003	**ENCODER FAULT** Defines the drive operation if a failure is detected in communication between the encoder and the encoder interface module, or between the module and the drive. 1 = FAULT – The drive generates fault ENCODER ERR, and the motor coasts to a stop. 2 = ALARM – The drive generates alarm ENCODER ERR and operates as if parameter 5002 ENCODER ENABLE = 0 (DISABLE), that is, speed feedback is derived from the internal motor model.
5010	**Z PLS ENABLE** Enables/disables the use of an encoder's Z-pulse to define the motor shaft's zero position. When enabled, a Z-pulse input resets parameter 0146 MECH ANGLE to zero to define the shaft's zero position. This function requires an encoder that provides Z-pulse signals. 0 = DISABLE – Z-pulse input is not present or ignored if present. 1 = ENABLE – A Z-pulse input resets parameter 0146 MECH ANGLE to zero.
5011	**POSITION RESET** Resets the encoder's position feedback. This parameter is self-clearing. 0 = DISABLE – Inactive. 1 = ENABLE – Resets the encoder position feedback. Parameters reset depends on the state of parameter 5010 Z PLS ENABLE: • 5010 = 0 (DISABLE) – Reset applies to parameters 0147 MECH REVS and 0146 MECH ANGLE. • 5010 = 1 (ENABLE) – Reset applies only to parameter 0147 MECH REVS.

Group 51: EXT COMM MODULE

This group defines set-up variables for a fieldbus adapter (FBA) communication module. For more information on these parameters, refer to the user's manual supplied with the FBA module.

Code	Description
5101	**FBA TYPE** Displays the type of the connected fieldbus adapter module. 0 = NOT DEFINED – Module not found, or not properly connected, or parameter 9802 is not set to 4 (EXT FBA). 1 = PROFIBUS-DP 21 = LONWORKS 32 = CANopen 37 = DEVICENET 101 = CONTROLNET 128 = ETHERNET 132 = PROFINET 135 = EtherCAT 136 = EPL – Ethernet POWERLINK 144 = CC-Link
5102 … 5126	**FB PAR 2…FB PAR 26** Refer to communication module documentation for more information on these parameters.
5127	**FBA PAR REFRESH** Validates any changed fieldbus parameter settings. 0 = DONE – Refreshing done. 1 = REFRESH – Refreshing. • After refreshing, the value reverts automatically to DONE.
5128	**FILE CPI FW REV** Displays the CPI firmware revision of the drive's fieldbus adapter configuration file. Format is xyz where: • x = major revision number • y = minor revision number • z = correction number **Example:** 107 = revision 1.07
5129	**FILE CONFIG ID** Displays the revision of the drive's fieldbus adapter module's configuration file identification. • File configuration information is drive application program-dependent.
5130	**FILE CONFIG REV** Contains the revision of the drive's fieldbus adapter module configuration file. **Example:** 1 = revision 1
5131	**FBA STATUS** Contains the status of the adapter module. 0 = IDLE – Adapter not configured. 1 = EXECUT INIT – Adapter is initializing. 2 = TIME OUT – A timeout has occurred in the communication between the adapter and the drive. 3 = CONFIG ERROR – Adapter configuration error. • The revision code of the adapter's CPI firmware revision is older than required CPI firmware version defined in the drive's configuration file (parameter 5132 < 5128). 4 = OFF-LINE – Adapter is off-line. 5 = ON-LINE – Adapter is on-line. 6 = RESET – Adapter is performing a hardware reset.
5132	**FBA CPI FW REV** Contains the revision of the module's CPI program. Format is xyz where: • x = major revision number • y = minor revision number • z = correction number **Example:** 107 = revision 1.07

Code	Description
5133	**FBA APPL FW REV** Contains the revision of the module's application program. Format is xyz (see parameter 5132).

Group 52: PANEL COMM

This group defines the communication settings for the control panel port on the drive. Normally, when using the supplied control panel, there is no need to change settings in this group.

In this group, parameter modifications take effect on the next power-up.

Code	Description
5201	**STATION ID** Defines the address of the drive. • Two units with the same address are not allowed on-line. • Range: 1…247
5202	**BAUD RATE** Defines the communication speed of the drive in kbits per second (kb/s). 9.6 kb/s 19.2 kb/s 38.4 kb/s 57.6 kb/s 115.2 kb/s
5203	**PARITY** Sets the character format to be used with the panel communication. 0 = 8 NONE 1 – 8 data bits, no parity, one stop bit. 1 = 8 NONE 2 – 8 data bits, no parity, two stop bits. 2 = 8 EVEN 1 – 8 data bits, even parity, one stop bit. 3 = 8 ODD 1 – 8 data bits, odd parity, one stop bit.
5204	**OK MESSAGES** Contains a count of valid Modbus messages received by the drive. • During normal operation, this counter is increasing constantly.
5205	**PARITY ERRORS** Contains a count of the characters with a parity error that is received from the bus. For high counts, check: • Parity settings of devices connected on the bus – they must not differ. • Ambient electro-magnetic noise levels – high noise levels generate errors.
5206	**FRAME ERRORS** Contains a count of the characters with a framing error that the bus receives. For high counts, check: • Communication speed settings of devices connected on the bus – they must not differ. • Ambient electro-magnetic noise levels – high noise levels generate errors.
5207	**BUFFER OVERRUNS** Contains a count of the characters received that cannot be placed in the buffer. • Longest possible message length for the drive is 128 bytes. • Received messages exceeding 128 bytes overflow the buffer. The excess characters are counted.
5208	**CRC ERRORS** Contains a count of the messages with a CRC error that the drive receives. For high counts, check: • Ambient electro-magnetic noise levels – high noise levels generate errors. • CRC calculations for possible errors.

Group 53: EFB PROTOCOL

This group defines set-up variables used for an embedded fieldbus (EFB) communication protocol. The standard EFB protocol in the ACS550 is Modbus. See chapter *Embedded fieldbus* page *199*.

Code	Description
5301	**EFB PROTOCOL ID** Contains the identification and program revision of the protocol. • Format: XXYY, where xx = protocol ID, and YY = program revision.
5302	**EFB STATION ID** Defines the node address of the RS485 link. • The node address on each unit must be unique.
5303	**EFB BAUD RATE** Defines the communication speed of the RS485 link in kbits per second (kb/s). 1.2 kb/s 2.4 kb/s 4.8 kb/s 9.6 kb/s 19.2 kb/s 38.4 kb/s 57.6 kb/s 76.8 kb/s
5304	**EFB PARITY** Defines the data length, parity and stop bits to be used with the RS485 link communication. • The same settings must be used in all on-line stations. 0 = 8 NONE 1 – 8 data bits, no parity, one stop bit. 1 = 8 NONE 2 – 8 data bits, no parity, two stop bits. 2 = 8 EVEN 1 – 8 data bits, even parity, one stop bit. 3 = 8 ODD 1 – 8 data bits, odd parity, one stop bit.
5305	**EFB CTRL PROFILE** Selects the communication profile used by the EFB protocol. 0 = ABB DRV LIM – Operation of Control/Status Words conforms to ABB Drives Profile, as used in ACS400. 1 = DCU PROFILE – Operation of Control/Status Words conforms to 32-bit DCU Profile. 2 = ABB DRV FULL – Operation of Control/Status Words conforms to ABB Drives Profile, as used in ACS600/800.
5306	**EFB OK MESSAGES** Contains a count of valid messages received by the drive. • During normal operation, this counter is increasing constantly.
5307	**EFB CRC ERRORS** Contains a count of the messages with a CRC error received by the drive. For high counts, check: • Ambient electro-magnetic noise levels – high noise levels generate errors. • CRC calculations for possible errors.
5308	**EFB UART ERRORS** Contains a count of the messages with a character error received by the drive.
5309	**EFB STATUS** Contains the status of the EFB protocol. 0 = IDLE – EFB protocol is configured, but not receiving any messages. 1 = EXECUT INIT – EFB protocol is initializing. 2 = TIME OUT – A timeout has occurred in the communication between the network master and the EFB protocol. 3 = CONFIG ERROR – EFB protocol has a configuration error. 4 = OFF-LINE – EFB protocol is receiving messages that are NOT addressed to this drive. 5 = ON-LINE – EFB protocol is receiving messages that are addressed to this drive. 6 = RESET – EFB protocol is performing a hardware reset. 7 = LISTEN ONLY – EFB protocol is in listen-only mode.
5310	**EFB PAR 10** Specifies the parameter mapped to Modbus Register 40005.

Code	Description
5311	**EFB PAR 11** Specifies the parameter mapped to Modbus Register 40006.
5312	**EFB PAR 12** Specifies the parameter mapped to Modbus Register 40007.
5313	**EFB PAR 13** Specifies the parameter mapped to Modbus Register 40008.
5314	**EFB PAR 14** Specifies the parameter mapped to Modbus Register 40009.
5315	**EFB PAR 15** Specifies the parameter mapped to Modbus Register 40010.
5316	**EFB PAR 16** Specifies the parameter mapped to Modbus Register 40011.
5317	**EFB PAR 17** Specifies the parameter mapped to Modbus Register 40012.
5318	**EFB PAR 18** For Modbus: Sets additional delay in milliseconds before the ACS550 begins transmitting response to the master request.
5319	**EFB PAR 19** ABB Drives profile (ABB DRV LIM or ABB DRV FULL) Control Word. Read only copy of the Fieldbus Control Word.
5320	**EFB PAR 20** ABB Drives profile (ABB DRV LIM or ABB DRV FULL) Status Word. Read only copy of the Fieldbus Status Word.

Group 64: LOAD ANALYZER

This group defines the load analyzer, which can be used for analyzing the customer's process and sizing the drive and the motor.

The peak value is logged at 2 ms level, and the distribution loggers are updated on 0.2 s (200 ms) time level. Three different values can be logged.

1. Amplitude logger 1: The measured current is logged continuously. The distribution as a percentage of the nominal current I_{2N} is shown in ten classes.
2. Peak value logger: One signal in group 1 can be logged for the peak (maximum) value. The peak value of the signal, peak time (time when the peak value was detected) as well the frequency, current and DC voltage at the peak time are shown.
3. Amplitude logger 2: One signal in group 1 can be logged for amplitude distribution. The base value (100% value) can be set by the user.

The first logger cannot be reset. The other two loggers can be reset by a user-defined method. They are also reset if either of the signals or the peak value filter time is changed.

Code	Description
6401	**PVL SIGNAL** Defines (by number) the signal logged for the peak value. • Any parameter number in *Group 01: OPERATING DATA* can be selected. Eg 102 = parameter 0102 SPEED. 100 = NOT SELECTED – No signal (parameter) logged for the peak value. 101…178 – Logs parameter 0101…0178.
6402	**PVL FILTER TIME** Defines the filter time for peak value logging. • 0.0…120.0 – Filter time (seconds).
6403	**LOGGERS RESET** Defines the source for the reset of peak value logger and amplitude logger 2. 0 = NOT SEL – No reset selected. 1 = DI1 – Reset loggers on the rising edge of digital input DI1. 2…6 = DI2…DI6 – Reset loggers on the rising edge of digital input DI2…DI6. 7 = RESET – Reset loggers. Parameter is set to NOT SEL. -1 = DI1(INV) – Reset loggers on the falling edge of digital input DI1. -2…-6 = DI2(INV) …DI6(INV) – Reset loggers on the falling edge of digital input DI2…DI6.
6404	**AL2 SIGNAL** Defines the signal logged for amplitude logger 2. • Any parameter number in *Group 01: OPERATING DATA* can be selected. Eg 102 = parameter 0102 SPEED. 100 = NOT SELECTED – No signal (parameter) logged for amplitude distribution (amplitude logger 2). 101…178 – Logs parameter 0101…0178.
6405	**AL2 SIGNAL BASE** Defines the base value from which the percentage distribution is calculated. • Representation and default value depends on the signal selected with parameter 6404 AL2 SIGNAL.
6406	**PEAK VALUE** Detected peak value of the signal selected with parameter 6401 PVL SIGNAL.
6407	**PEAK TIME 1** Date of the peak value detection. • Format: Date if the real time clock is operating (dd.mm.yy). / The number of days elapsed after the power-on if the real time clock is not used, or was not set (xx d).
6408	**PEAK TIME 2** Time of the peak value detection. • Format: hours:minutes:seconds.

Code	Description
6409	**CURRENT AT PEAK** Current at the moment of the peak value (amperes).
6410	**UDC AT PEAK** DC voltage at the moment of the peak value (volts).
6411	**FREQ AT PEAK** Output frequency at the moment of the peak value (herzes).
6412	**TIME OF RESET 1** Last reset date of the peak logger and amplitude logger 2. • Format: Date if the real time clock is operating (dd.mm.yy). / The number of days elapsed after the power-on if the real time clock is not used, or was not set (xx d).
6413	**TIME OF RESET 2** Last reset time of the peak logger and amplitude logger 2. • Format: hours:minutes:seconds.
6414	**AL1RANGE0TO10** Amplitude logger 1 (current in percent of nominal current I_{2N}) 0…10% distribution.
6415	**AL1RANGE10TO20** Amplitude logger 1 (current in percent of nominal current I_{2N}) 10…20% distribution.
6416	**AL1RANGE20TO30** Amplitude logger 1 (current in percent of nominal current I_{2N}) 20…30% distribution.
6417	**AL1RANGE30TO40** Amplitude logger 1 (current in percent of nominal current I_{2N}) 30…40% distribution.
6418	**AL1RANGE40TO50** Amplitude logger 1 (current in percent of nominal current I_{2N}) 40…50% distribution.
6419	**AL1RANGE50TO60** Amplitude logger 1 (current in percent of nominal current I_{2N}) 50…60% distribution.
6420	**AL1RANGE60TO70** Amplitude logger 1 (current in percent of nominal current I_{2N}) 60…70% distribution.
6421	**AL1RANGE70TO80** Amplitude logger 1 (current in percent of nominal current I_{2N}) 70…80% distribution.
6422	**AL1RANGE80TO90** Amplitude logger 1 (current in percent of nominal current I_{2N}) 80…90% distribution.
6423	**AL1RANGE90TO** Amplitude logger 1 (current in percent of nominal current I_{2N}) over 90% distribution.
6424	**AL2RANGE0TO10** Amplitude logger 2 (signal selection with parameter 6404) 0…10% distribution.
6425	**AL2RANGE10TO20** Amplitude logger 2 (signal selection with parameter 6404) 10…20% distribution.
6426	**AL2RANGE20TO30** Amplitude logger 2 (signal selection with parameter 6404) 20…30% distribution.
6427	**AL2RANGE30TO40** Amplitude logger 2 (signal selection with parameter 6404) 30…40% distribution.
6428	**AL2RANGE40TO50** Amplitude logger 2 (signal selection with parameter 6404) 40…50% distribution.
6429	**AL2RANGE50TO60** Amplitude logger 2 (signal selection with parameter 6404) 50…60% distribution.
6430	**AL2RANGE60TO70** Amplitude logger 2 (signal selection with parameter 6404) 60…70% distribution.
6431	**AL2RANGE70TO80** Amplitude logger 2 (signal selection with parameter 6404) 70…80% distribution.

Code	Description
6432	**AL2RANGE80TO90** Amplitude logger 2 (signal selection with parameter 6404) 80…90% distribution.
6433	**AL2RANGE90TO** Amplitude logger 2 (signal selection with parameter 6404) over 90% distribution.

Group 81: PFC CONTROL

This group defines a Pump-Fan Control (PFC) mode of operation. The major features of PFC control are:

- The ACS550 controls the motor of pump no. 1, varying the motor speed to control the pump capacity. This motor is the speed regulated motor.
- Direct line connections power the motor of pump no. 2 and pump no.3, etc. The ACS550 switches pump no. 2 (and then pump no. 3, etc.) on and off as needed. These motors are auxiliary motors.
- The ACS550 PID control uses two signals: a process reference and an actual value feedback. The PID controller adjusts the speed (frequency) of the first pump such that the actual value follows the process reference.
- When demand (defined by the process reference) exceeds the first motor's capacity (user defined as a frequency limit), the PFC control automatically starts an auxiliary pump. The PFC also reduces the speed of the first pump to account for the auxiliary pump's addition to total output. Then, as before, the PID controller adjusts the speed (frequency) of the first pump such that the actual value follows the process reference. If demand continues to increase, PFC adds additional auxiliary pumps, using the same process.
- When demand drops, such that the first pump speed falls below a minimum limit (user defined by a frequency limit), the PFC control automatically stops an auxiliary pump. The PFC also increases the speed of the first pump to account for the auxiliary pump's missing output.
- An Interlock function (when enabled) identifies off-line (out of service) motors, and the PFC control skips to the next available motor in the sequence.
- An Autochange function (when enabled and with the appropriate switchgear) equalizes duty time between the pump motors. Autochange periodically increments the position of each motor in the rotation – the speed regulated motor becomes the last auxiliary motor, the first auxiliary motor becomes the speed regulated motor, etc.

Code	Description
8103	**REFERENCE STEP 1** Sets a percentage value that is added to the process reference. • Applies only when at least one auxiliary (constant speed) motor is running. • Default value is 0%. **Example:** An ACS550 operates three parallel pumps that maintain water pressure in a pipe. • 4011 INTERNAL SETPNT sets a constant pressure reference that controls the pressure in the pipe. • The speed regulated pump operates alone at low water consumption levels. • As water consumption increases, first one constant speed pump operates, then, the second. • As flow increases, the pressure at the output end of the pipe drops relative to the pressure measured at the input end. As auxiliary motors step in to increase the flow, the adjustments below correct the reference to more closely match the output pressure. • When the first auxiliary pump operates, increase the reference with parameter 8103 REFERENCE STEP 1. • When two auxiliary pumps operate, increase the reference with parameter 8103 REFERENCE STEP 1 + parameter 8104 REFERENCE STEP 2. • When three auxiliary pumps operate, increase the reference with parameter 8103 REFERENCE STEP 1 + parameter 8104 REFERENCE STEP 2 + parameter 8105 REFERENCE STEP 3.

Code	Description
8104	**REFERENCE STEP 2** Sets a percentage value that is added to the process reference. • Applies only when at least two auxiliary (constant speed) motors are running. • See parameter 8103 REFERENCE STEP 1.
8105	**REFERENCE STEP 3** Sets a percentage value that is added to the process reference. • Applies only when at least three auxiliary (constant speed) motors are running. • See parameter 8103 REFERENCE STEP 1.
8109	**START FREQ 1** Sets the frequency limit used to start the first auxiliary motor. The first auxiliary motor starts if: • No auxiliary motors are running. • ACS550 output frequency exceeds the limit: 8109 + 1 Hz. • Output frequency stays above a relaxed limit (8109 - 1 Hz) for at least the time: 8115 AUX MOT START D. After the first auxiliary motor starts: • Output frequency decreases by the value = (8109 START FREQ 1) - (8112 LOW FREQ 1). • In effect, the output of the speed regulated motor drops to compensate for the input from the auxiliary motor. See the figure, where: • A = (8109 START FREQ 1) - (8112 LOW FREQ 1) • B = Output frequency increase during the start delay. • C = Diagram showing auxiliary motor's run status as frequency increases (1 = On). 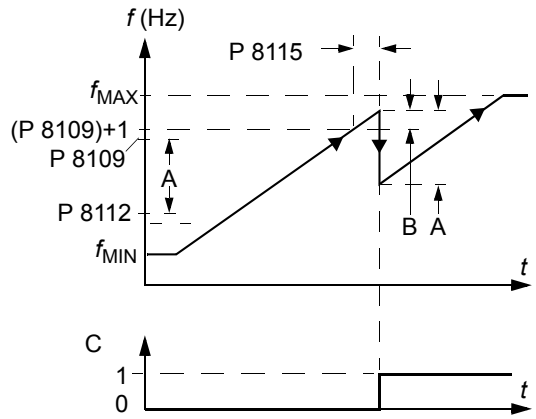 **Note:** 8109 START FREQ 1 value must be between: • 8112 LOW FREQ 1 • (2008 MAXIMUM FREQ) -1.
8110	**START FREQ 2** Sets the frequency limit used to start the second auxiliary motor. • See 8109 START FREQ 1 for a complete description of the operation. The second auxiliary motor starts if: • One auxiliary motor is running. • ACS550 output frequency exceeds the limit: 8110 + 1. • Output frequency stays above the relaxed limit (8110 - 1 Hz) for at least the time: 8115 AUX MOT START D.
8111	**START FREQ 3** Sets the frequency limit used to start the third auxiliary motor. • See 8109 START FREQ 1 for a complete description of the operation. The third auxiliary motor starts if: • Two auxiliary motors are running. • ACS550 output frequency exceeds the limit: 8111 + 1 Hz. • Output frequency stays above the relaxed limit (8111 - 1 Hz) for at least the time: 8115 AUX MOT START D.

Code	Description
8112	**LOW FREQ 1** Sets the frequency limit used to stop the first auxiliary motor. The first auxiliary motor stops if: • Only one (the first) auxiliary motor is running. • ACS550 output frequency drops below the limit: 8112 - 1. • Output frequency stays below the relaxed limit (8112 + 1 Hz) for at least the time: 8116 AUX MOT STOP D. After the first auxiliary motor stops: • Output frequency increases by the value = (8109 START FREQ 1) - (8112 LOW FREQ 1). • In effect, the output of the speed regulated motor increases to compensate for the loss of the auxiliary motor. See the figure, where: • A = (8109 START FREQ 1) - (8112 LOW FREQ 1) • B = Output frequency decrease during the stop delay. • C = Diagram showing auxiliary motor's run status as frequency decreases (1 = On). • Grey path = Shows hysteresis – if time is reversed, the path backwards is not the same. For details on the path for starting, see the diagram at 8109 START FREQ 1. 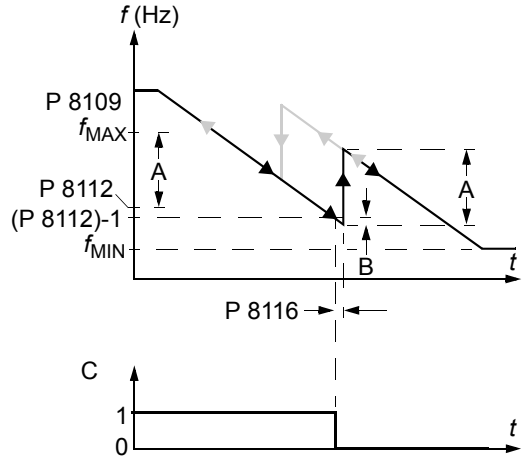 **Note:** 8112 LOW FREQ 1 value must be between: • (2007 MINIMUM FREQ) +1. • 8109 START FREQ 1
8113	**LOW FREQ 2** Sets the frequency limit used to stop the second auxiliary motor. • See 8112 LOW FREQ 1 for a complete description of the operation. The second auxiliary motor stops if: • Two auxiliary motors are running. • ACS550 output frequency drops below the limit: 8113 - 1. • Output frequency stays below the relaxed limit (8113 + 1 Hz) for at least the time: 8116 AUX MOT STOP D.
8114	**LOW FREQ 3** Sets the frequency limit used to stop the third auxiliary motor. • See 8112 LOW FREQ 1 for a complete description of the operation. The third auxiliary motor stops if: • Three auxiliary motors are running. • ACS550 output frequency drops below the limit: 8114 - 1. • Output frequency stays below the relaxed limit (8114 + 1 Hz) for at least the time: 8116 AUX MOT STOP D.
8115	**AUX MOT START D** Sets the Start Delay for the auxiliary motors. • The output frequency must remain above the start frequency limit (parameter 8109, 8110, or 8111) for this time period before the auxiliary motor starts. • See 8109 START FREQ 1 for a complete description of the operation.
8116	**AUX MOT STOP D** Sets the Stop Delay for the auxiliary motors. • The output frequency must remain below the low frequency limit (parameter 8112, 8113, or 8114) for this time period before the auxiliary motor stops. • See 8112 LOW FREQ 1 for a complete description of the operation.

Code	Description
8117	**NR OF AUX MOT** Sets the number of auxiliary motors. • Each auxiliary motor requires a relay output, which the drive uses to send start/stop signals. • The Autochange function, if used, requires an additional relay output for the speed regulated motor. • The following describes the set-up of the required relay outputs. **Relay outputs** As noted above, each auxiliary motor requires a relay output, which the drive uses to send start/stop signals. The following describes how the drive keeps track of motors and relays. • The ACS550 provides relay outputs RO1…RO3. • An external digital output module (OREL-01) can be added to provide relay outputs RO4…RO6. • Parameters 1401…1403 and 1410…1412 define, respectively, how relays RO1…RO6 are used – the parameter value 31 PFC defines the relay as used for PFC. • The ACS550 assigns auxiliary motors to relays in ascending order. If the Autochange function is disabled, the first auxiliary motor is the one connected to the first relay with a parameter setting = 31 PFC, and so on. If the Autochange function is used, the assignments rotate. Initially, the speed regulated motor is the one connected to the first relay with a parameter setting = 31 PFC, the first auxiliary motor is the one connected to the second relay with a parameter setting = 31 PFC, and so on. 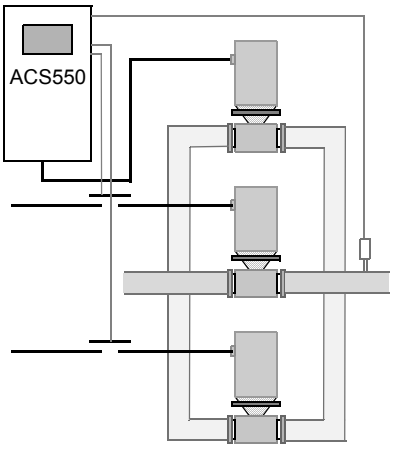 Standard PFC mode 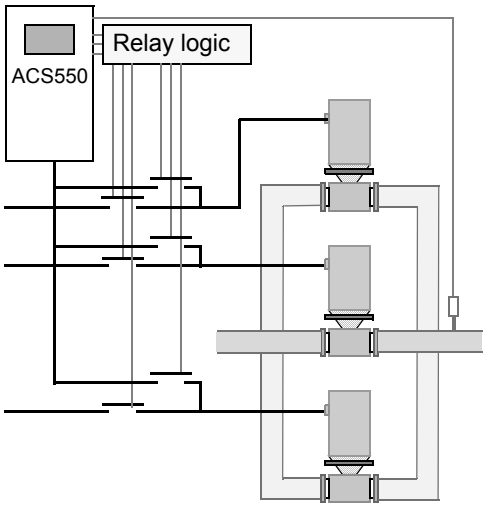 PFC with Autochange mode • The fourth auxiliary motor uses the same reference step, low frequency and start frequency values as the third auxiliary motor.

Code	Description

- The table below shows the ACS550 PFC motor assignments for some typical settings in the Relay Output parameters (1401…1403 and 1410…1412), where the settings are either =31 (PFC), or =X (anything but 31), and where the Autochange function is disabled (8118 AUTOCHNG INTERV = 0.0).

Parameter setting							ACS550 Relay assignment					
							Autochange disabled					
1401	1402	1403	1410	1411	1412	8117	RO1	RO2	RO3	RO4	RO5	RO6
31	X	X	X	X	X	1	Aux.	X	X	X	X	X
31	31	X	X	X	X	2	Aux.	Aux.	X	X	X	X
31	31	31	X	X	X	3	Aux.	Aux.	Aux.	X	X	X
X	31	31	X	X	X	2	X	Aux.	Aux.	X	X	X
X	X	X	31	X	31	2	X	X	X	Aux.	X	Aux.
31	31	X	X	X	X	1*	Aux.	Aux.	X	X	X	X

* = One additional relay output for the PFC that is in use. One motor is in "sleep" when the other is rotating.

- The table below shows the ACS550 PFC motor assignments for some typical settings in the Relay Output parameters (1401…1403 and 1410…1412), where the settings are either =31 (PFC), or =X (anything but 31), and where the Autochange function is enabled (8118 AUTOCHNG INTERV = value > 0.0).

Parameter setting							ACS550 Relay assignment					
							Autochange enabled					
1401	1402	1403	1410	1411	1412	8117	RO1	RO2	RO3	RO4	RO5	RO6
31	31	X	X	X	X	1	PFC	PFC	X	X	X	X
31	31	31	X	X	X	2	PFC	PFC	PFC	X	X	X
X	31	31	X	X	X	1	X	PFC	PFC	X	X	X
X	X	X	31	X	31	1	X	X	X	PFC	X	PFC
31	31	X	X	X	X	0**	PFC	PFC	X	X	X	X

** = No auxiliary motors, but the autochange function is in use. Working as a standard PID-control.

8118 **AUTOCHNG INTERV**

Controls operation of the Autochange function and sets the interval between changes.

- The Autochange time interval only applies to the time when the speed regulated motor is running.
- See parameter 8119 AUTOCHNG LEVEL for an overview of the Autochange function.
- The drive always coasts to stop when autochange is performed.
- Autochange enabled requires parameter 8120 INTERLOCKS = value > 0.

-0.1 = TEST MODE – Forces the interval to value 36…48 s.
0.0 = NOT SEL – Disables the Autochange function.
0.1…336 – The operating time interval (the time when the start signal is on) between automatic motor changes.

WARNING! When enabled, the Autochange function requires the interlocks (8120 INTERLOCKS = value > 0) enabled. During autochange the power output is interrupted and the drive coasts to stop, preventing damage to the contacts.

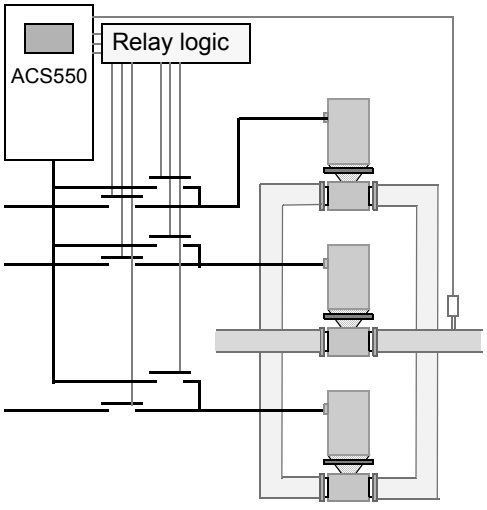

PFC with Autochange mode

Code	Description
8119	**AUTOCHNG LEVEL** Sets an upper limit, as a percent of output capacity, for the autochange logic. When the output from the PID/PFC control block exceeds this limit, autochange is prevented. For example, use this parameter to deny autochange when the Pump-Fan system is operating near maximum capacity. **Autochange overview** The purpose of the autochange operation is to equalize duty time between multiple motors used in a system. At each autochange operation: • A different motor takes a turn connected to the ACS550 output – the speed regulated motor. • The starting order of the other motors rotates. The Autochange function requires: • External switchgear for changing the drive's output power connections. • Parameter 8120 INTERLOCKS = value > 0. Autochange is performed when: • The running time since the previous autochange reaches the time set by 8118 AUTOCHNG INTERV. • The PFC input is below the level set by this parameter, 8119 AUTOCHNG LEVEL. **Note:** The ACS550 always coasts to stop when autochange is performed. In an autochange, the Autochange function does all of the following (see the figure): • Initiates a change when the running time, since the last autochange, reaches 8118 AUTOCHNG INTERV, and PFC input is below limit 8119 AUTOCHNG LEVEL. • Stops the speed regulated motor. • Switches off the contactor of the speed regulated motor. • Increments the starting order counter, to change the starting order for the motors. • Identifies the next motor in line to be the speed regulated motor. • Switches off the above motor's contactor, if the motor was running. Any other running motors are not interrupted. • Switches on the contactor of the new speed regulated motor. The autochange switchgear connects this motor to the ACS550 power output. • Delays motor start for the time 8122 PFC START DELAY. • Starts the speed regulated motor. • Identifies the next constant speed motor in the rotation. • Switches the above motor on, but only if the new speed regulated motor had been running (as a constant speed motor) – This step keeps an equal number of motors running before and after autochange. • Continues with normal PFC operation. 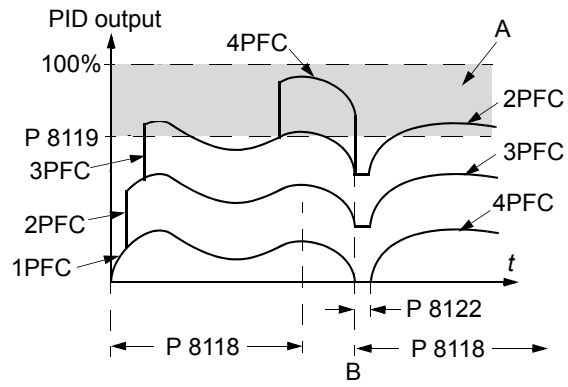 A = Area above 8119 AUTOCHNG LEVEL – autochange not allowed. B = Autochange occurs. 1PFC, etc. = PID output associated with each motor. **Starting order counter** The operation of the starting-order counter: • The relay output parameter definitions (1401…1403 and 1410…1412) establish the initial motor sequence. (The lowest parameter number with a value 31 (PFC) identifies the relay connected to 1PFC, the first motor, and so on.) • Initially, 1PFC = speed regulated motor, 2PFC = 1st auxiliary motor, etc. • The first autochange shifts the sequence to: 2PFC = speed regulated motor, 3PFC = 1st auxiliary motor, …, 1PFC = last auxiliary motor. • The next autochange shifts the sequence again, and so on. • If the autochange cannot start a needed motor because all inactive motors are interlocked, the drive displays an alarm (2015, PFC I LOCK). 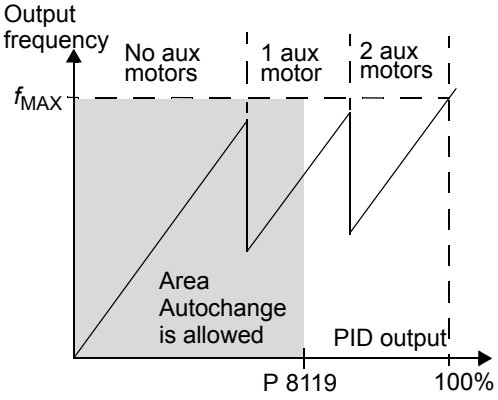 • When ACS550 power supply is switched off, the counter preserves the current Autochange rotation positions in permanent memory. When power is restored, the Autochange rotation starts at the position stored in memory. • If the PFC relay configuration is changed (or if the PFC enable value is changed), the rotation is reset. (See the first bullet above.)

Code	Description
8120	**INTERLOCKS** Defines operation of the Interlock function. When the Interlock function is enabled: • An interlock is active when its command signal is absent. • An interlock is inactive when its command signal is present. • The ACS550 will not start if a start command occurs when the speed regulated motor's interlock is active – the control panel displays an alarm (2015, PFC I LOCK). Wire each Interlock circuit as follows: • Wire a contact of the motor's On/Off switch to the Interlock circuit – the drive's PFC logic can then recognize that the motor is switched off and start the next available motor. • Wire a contact of the motor thermal relay (or other protective device in the motor circuit) to the Interlock input – the drive's PFC logic can then recognize that a motor fault is activated and stop the motor. 0 = NOT SEL – Disables the Interlock function. All digital inputs are available for other purposes. • Requires 8118 AUTOCHNG INTERV = 0.0 (The Autochange function must be disabled if Interlock function is disabled.) 1 = DI1 – Enables the Interlock function and assigns a digital input (starting with DI1) to the interlock signal for each PFC relay. These assignments are defined in the following table and depend on: • the number of PFC relays [number of parameters 1401…1403 and 1410…1412 with value = 31 (PFC)] • the Autochange function status (disabled if 8118 AUTOCHNG INTERV = 0.0, and otherwise enabled).

No. PFC relays	Autochange disabled (P 8118)	Autochange enabled (P 8118)
0	DI1: Speed Reg Motor DI2…DI6: Free	Not allowed
1	DI1: Speed Reg Motor DI2: First PFC Relay DI3…DI6: Free	DI1: First PFC Relay DI2…DI6: Free
2	DI1: Speed Reg Motor DI2: First PFC Relay DI3: Second PFC Relay DI4…DI6: Free	DI1: First PFC Relay DI2: Second PFC Relay DI3…DI6: Free
3	DI1: Speed Reg Motor DI2: First PFC Relay DI3: Second PFC Relay DI4: Third PFC Relay DI5…DI6: Free	DI1: First PFC Relay DI2: Second PFC Relay DI3: Third PFC Relay DI4…DI6: Free
4	DI1: Speed Reg Motor DI2: First PFC Relay DI3: Second PFC Relay DI4: Third PFC Relay DI5: Fourth PFC Relay DI6: Free	DI1: First PFC Relay DI2: Second PFC Relay DI3: Third PFC Relay DI4: Fourth PFC Relay DI5…DI6: Free
5	DI1: Speed Reg Motor DI2: First PFC Relay DI3: Second PFC Relay DI4: Third PFC Relay DI5: Fourth PFC Relay DI6: Fifth PFC Relay	DI1: First PFC Relay DI2: Second PFC Relay DI3: Third PFC Relay DI4: Fourth PFC Relay DI5: Fifth PFC Relay DI6: Free
6	Not allowed	DI1: First PFC Relay DI2: Second PFC Relay DI3: Third PFC Relay DI4: Fourth PFC Relay DI5: Fifth PFC Relay DI6: Sixth PFC Relay

Code	Description
	2 = DI2 – Enables the Interlock function and assigns a digital input (starting with DI2) to the interlock signal for each PFC relay. These assignments are defined in the following table and depend on: • the number of PFC relays [number of parameters 1401…1403 and 1410…1412 with value = 31 (PFC)] • the Autochange function status (disabled if 8118 AUTOCHNG INTERV = 0.0, and otherwise enabled).

No. PFC relays	Autochange disabled (P 8118)	Autochange enabled (P 8118)
0	DI1: Free DI2: Speed Reg Motor DI3…DI6: Free	Not allowed
1	DI1: Free DI2: Speed Reg Motor DI3: First PFC Relay DI4…DI6: Free	DI1: Free DI2: First PFC Relay DI3…DI6: Free
2	DI1: Free DI2: Speed Reg Motor DI3: First PFC Relay DI4: Second PFC Relay DI5…DI6: Free	DI1: Free DI2: First PFC Relay DI3: Second PFC Relay DI4…DI6: Free
3	DI1: Free DI2: Speed Reg Motor DI3: First PFC Relay DI4: Second PFC Relay DI5: Third PFC Relay DI6: Free	DI1: Free DI2: First PFC Relay DI3: Second PFC Relay DI4: Third PFC Relay DI5…DI6: Free
4	DI1: Free DI2: Speed Reg Motor DI3: First PFC Relay DI4: Second PFC Relay DI5: Third PFC Relay DI6: Fourth PFC Relay	DI1: Free DI2: First PFC Relay DI3: Second PFC Relay DI4: Third PFC Relay DI5: Fourth PFC Relay DI6: Free
5	Not allowed	DI1: Free DI2: First PFC Relay DI3: Second PFC Relay DI4: Third PFC Relay DI5: Fourth PFC Relay DI6: Fifth PFC Relay
6	Not allowed	Not allowed

Code	Description
	3 = DI3 – Enables the Interlocks function and assigns a digital input (starting with DI3) to the interlock signal for each PFC relay. These assignments are defined in the following table and depend on: • the number of PFC relays [number of parameters 1401…1403 and 1410…1412 with value = 31 (PFC)] • the Autochange function status (disabled if 8118 AUTOCHNG INTERV = 0.0, and otherwise enabled).

No. PFC relays	Autochange disabled (P 8118)	Autochange enabled (P 8118)
0	DI1…DI2: Free DI3: Speed Reg Motor DI4…DI6: Free	Not allowed
1	DI1…DI2: Free DI3: Speed Reg Motor DI4: First PFC Relay DI5…DI6: Free	DI1…DI2: Free DI3: First PFC Relay DI4…DI6: Free
2	DI1…DI2: Free DI3: Speed Reg Motor DI4: First PFC Relay DI5: Second PFC Relay DI6: Free	DI1…DI2: Free DI3: First PFC Relay DI4: Second PFC Relay DI5…DI6: Free
3	DI1…DI2: Free DI3: Speed Reg Motor DI4: First PFC Relay DI5: Second PFC Relay DI6: Third PFC Relay	DI1…DI2: Free DI3: First PFC Relay DI4: Second PFC Relay DI5: Third PFC Relay DI6: Free
4	Not allowed	DI1…DI2: Free DI3: First PFC Relay DI4: Second PFC Relay DI5: Third PFC Relay DI6: Fourth PFC Relay
5…6	Not allowed	Not allowed

4 = DI4 – Enables the Interlock function and assigns a digital input (starting with DI4) to the interlock signal for each PFC relay. These assignments are defined in the following table and depend on:
• the number of PFC relays [number of parameters 1401…1403 and 1410…1412 with value = 31 (PFC)]
• the Autochange function status (disabled if 8118 AUTOCHNG INTERV = 0.0, and otherwise enabled).

No. PFC relays	Autochange disabled (P 8118)	Autochange enabled (P 8118)
0	DI1…DI3: Free DI4: Speed Reg Motor DI5…DI6: Free	Not allowed
1	DI1…DI3: Free DI4: Speed Reg Motor DI5: First PFC Relay DI6: Free	DI1…DI3: Free DI4: First PFC Relay DI5…DI6: Free
2	DI1…DI3: Free DI4: Speed Reg Motor DI5: First PFC Relay DI6: Second PFC Relay	DI1…DI3: Free DI4: First PFC Relay DI5: Second PFC Relay DI6: Free
3	Not allowed	DI1…DI3: Free DI4: First PFC Relay DI5: Second PFC Relay DI6: Third PFC Relay
4…6	Not allowed	Not allowed

Code	Description
	5 = DI5 – Enables the Interlock function and assigns a digital input (starting with DI5) to the interlock signal for each PFC relay. These assignments are defined in the following table and depend on: • the number of PFC relays [number of parameters 1401…1403 and 1410…1412 with value = 31 (PFC)] • the Autochange function status (disabled if 8118 AUTOCHNG INTERV = 0.0, and otherwise enabled).

No. PFC relays	Autochange disabled (P 8118)	Autochange enabled (P 8118)
0	DI1…DI4: Free DI5: Speed Reg Motor DI6: Free	Not allowed
1	DI1…DI4: Free DI5: Speed Reg Motor DI6: First PFC Relay	DI1…DI4: Free DI5: First PFC Relay DI6: Free
2	Not allowed	DI1…DI4: Free DI5: First PFC Relay DI6: Second PFC Relay
3…6	Not allowed	Not allowed

6 = DI6 – Enables the Interlock function and assigns digital input DI6 to the interlock signal for the speed regulated motor.
• Requires 8118 AUTOCHNG INTERV = 0.0.

No. PFC relays	Autochange disabled	Autochange enabled
0	DI1…DI5: Free DI6: Speed Reg Motor	Not allowed
1	Not allowed	DI1…DI5: Free DI6: First PFC Relay
2…6	Not allowed	Not allowed

Code	Description
8121	**REG BYPASS CTRL** Selects Regulator by-pass control. When enabled, Regulator by-pass control provides a simple control mechanism without a PID regulator. • Use Regulator by-pass control only in special applications. 0 = NO – Disables Regulator by-pass control. The drive uses the normal PFC reference: 1106 REF2 SELECT. 1 = YES – Enables Regulator by-pass control. • The process PID regulator is bypassed. Actual value of PID is used as the PFC reference (input). Normally EXT REF2 is used as the PFC reference. • The drive uses the feedback signal defined by 4014 FBK SEL (or 4114) for the PFC frequency reference. • The figure shows the relation between the control signal 4014 FBK SEL (OR 4114) and the speed regulated motor's frequency in a three-motor system. **Example:** In the diagram below, the pumping station's outlet flow is controlled by the measured inlet flow (A). 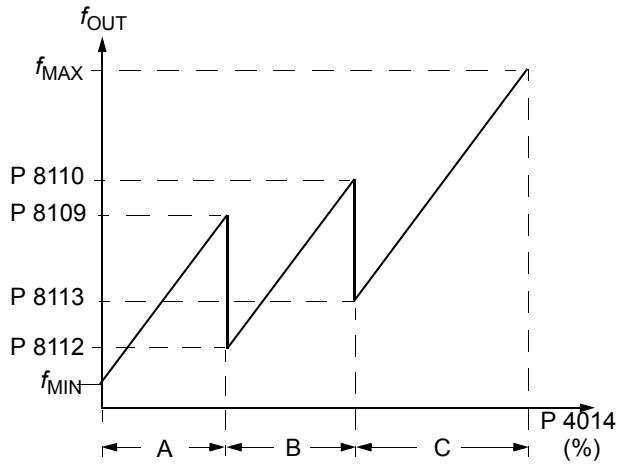 A = No auxiliary motors running B = One auxiliary motor running C = Two auxiliary motors running 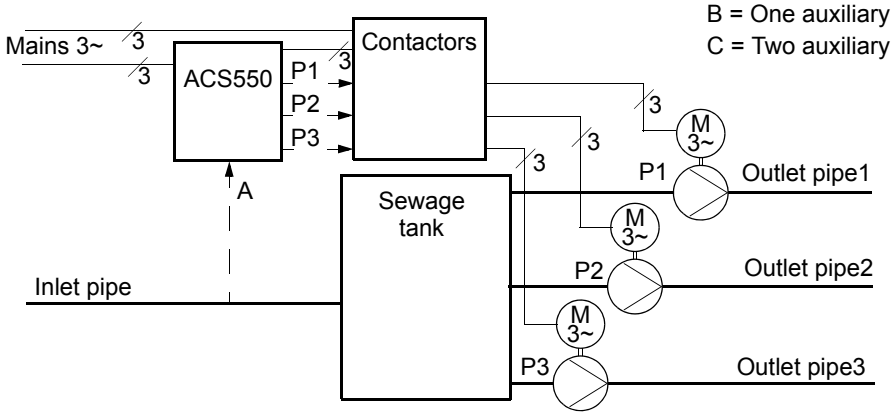
8122	**PFC START DELAY** Sets the start delay for speed regulated motors in the system. Using the delay, the drive works as follows: • Switches on the contactor of the speed regulated motor – connecting the motor to the ACS550 power output. • Delays motor start for the time 8122 PFC START DELAY. • Starts the speed regulated motor. • Starts auxiliary motors. See parameter 8115 for delay. **WARNING!** Motors equipped with star-delta starters require a PFC Start Delay. • After the ACS550 relay output switches a motor on, the star-delta starter must switch to the star-connection and then back to the delta-connection before the drive applies power. • So, the PFC Start Delay must be longer than the time setting of the star-delta starter.
8123	**PFC ENABLE** Selects PFC control. When enabled, PFC control: • Switches in, or out, auxiliary constant speed motors as output demand increases or decreases. Parameters 8109 START FREQ 1 to 8114 LOW FREQ 3 define the switch points in terms of the drive output frequency. • Adjusts the speed regulated motor output down, as auxiliary motors are added, and adjusts the speed regulated motor output up, as auxiliary motors are taken off line. • Provides Interlock functions, if enabled. • Requires 9904 MOTOR CTRL MODE = 3 (SCALAR:FREQ). 0 = NOT SEL – Disables PFC control. 1 = ACTIVE – Enables PFC control.

Code	Description
8124	**ACC IN AUX STOP** Sets the PFC acceleration time for a zero-to-maximum frequency ramp. This PFC acceleration ramp: • Applies to the speed regulated motor, when an auxiliary motor is switched off. • Replaces the acceleration ramp defined in *Group 22: ACCEL/DECEL*. • Applies only until the output of the regulated motor increases by an amount equal to the output of the switched off auxiliary motor. Then the acceleration ramp defined in *Group 22: ACCEL/DECEL* applies. 0 = NOT SEL. 0.1…1800 – Activates this function using the value entered as the acceleration time.
8125	**DEC IN AUX START** Sets the PFC deceleration time for a maximum-to-zero frequency ramp. This PFC deceleration ramp: • Applies to the speed regulated motor, when an auxiliary motor is switched on. • Replaces the deceleration ramp defined in *Group 22: ACCEL/DECEL*. • Applies only until the output of the regulated motor decreases by an amount equal to the output of the auxiliary motor. Then the deceleration ramp defined in *Group 22: ACCEL/DECEL* applies. 0 = NOT SEL. 0.1…1800 – Activates this function using the value entered as the deceleration time.

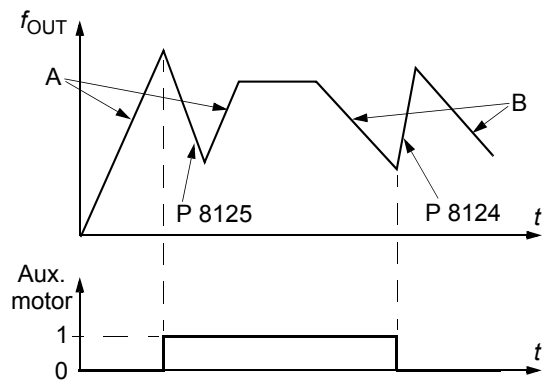

• A = speed regulated motor accelerating using *Group 22: ACCEL/DECEL* parameters (2202 or 2205).
• B = speed regulated motor decelerating using *Group 22: ACCEL/DECEL* parameters (2203 or 2206).
• At aux. motor start, speed regulated motor decelerates using 8125 DEC IN AUX START.
• At aux. motor stop, speed regulated motor accelerates using 8124 ACC IN AUX STOP.

8126	**TIMED AUTOCHNG** Sets the autochange using a Timed function. See parameter 8119 AUTOCHNG LEVEL. 0 = NOT SEL. 1 = TIMED FUNC 1 – Enables autochange when Timed function 1 is active. 2…4 = TIMED FUNC 2…4 – Enables autochange when Timed function 2…4 is active.
8127	**MOTORS** Sets the actual number of PFC controlled motors (maximum 7 motors, 1 speed regulated, 3 connected direct-on-line and 3 spare motors). • This value includes also the speed regulated motor. • This value must be compatible with the number of relays allocated to PFC if the Autochange function is used. • If Autochange function is not used, the speed regulated motor does not need to have a relay output allocated to PFC but it needs to be included in this value.
8128	**AUX START ORDER** Sets the start order of the auxiliary motors. 1 = EVEN RUNTIME – Time sharing is active. Evens out the cumulative run time of the auxiliary motors. The start order depends on the run time: The auxiliary motor whose cumulative run time is shortest is started first, then the motor whose cumulative run time is the second shortest etc. When the demand drops, the first motor to be stopped is the one whose cumulative run time is longest. 2 = RELAY ORDER – The start order is fixed to be the order of the relays.

Group 98: OPTIONS

This group configures for options, in particular, enabling serial communication with the drive.

Code	Description
9802	**COMM PROT SEL** Selects the communication protocol. 0 = NOT SEL – No communication protocol selected. 1 = STD MODBUS – The drive communicates with Modbus via the RS485 channel (X1-communications, terminal). • See also *Group 53: EFB PROTOCOL*. 4 = EXT FBA – The drive communicates via a fieldbus adapter module in option slot 2 of the drive. • See also *Group 51: EXT COMM MODULE*.

Embedded fieldbus

Overview

The ACS550 can be set up to accept control from an external system using standard serial communication protocols. When using serial communication, the ACS550 can either:

- receive all of its control information from the fieldbus, or
- be controlled from some combination of fieldbus control and other available control locations, such as digital or analog inputs and the control panel.

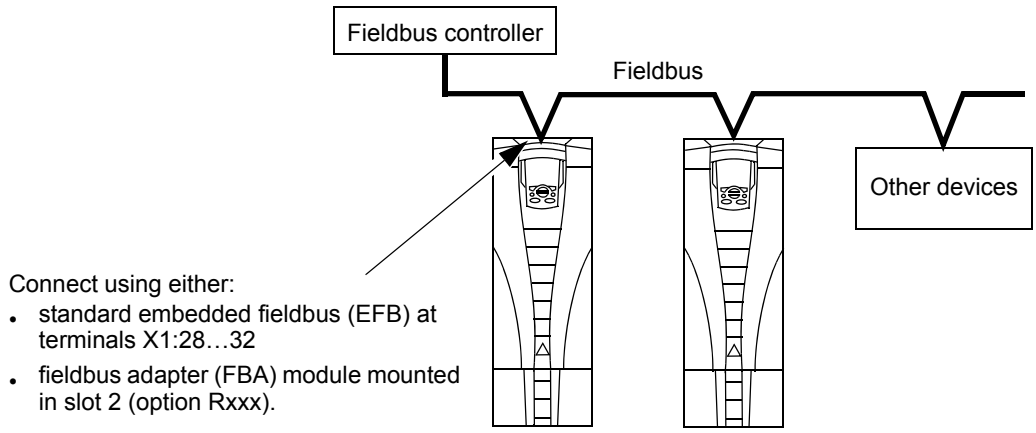

Two basic serial communications configurations are available:

- embedded fieldbus (EFB) – Using the RS485 interface at terminals X1:28…32 on the control board, a control system can communicate with the drive using the Modbus® protocol. (For protocol and profile descriptions, see sections *Modbus protocol technical data* and *ABB control profiles technical data* later in this chapter.)
- fieldbus adapter (FBA) – See chapter *Fieldbus adapter* on page *231*.

Control interface

In general, the basic control interface between Modbus and the drive consists of:

- Output words
  - Control Word
  - Reference1
  - Reference2
- Input words
  - Status Word
  - Actual value 1
  - Actual value 2

- Actual value 3
- Actual value 4
- Actual value 5
- Actual value 6
- Actual value 7
- Actual value 8

The content of these words is defined by profiles. For details on the profiles used, sees section *ABB control profiles technical data* on page *219*.

Note: The words "output" and "input" are used as seen from the fieldbus controller point of view. For example an output describes data flow from the fieldbus controller to the drive and appears as an input from the drive point of view.

Planning

Network planning should address the following questions:

- What types and quantities of devices must be connected to the network?
- What control information must be sent down to the drives?
- What feedback information must be sent from the drives to the controlling system?

Mechanical and electrical installation – EFB

WARNING! Connections should be made only while the drive is disconnected from the power source.

Drive terminals 28...32 are for RS485 communications.

- Use Belden 9842 or equivalent. Belden 9842 is a dual twisted, shielded pair cable with a wave impedance of 120 ohm.
- Use one of these twisted shielded pairs for the RS485 link. Use this pair to connect all A (-) terminals together and all B (+) terminals together.
- Use one of the wires in the other pair for the logical ground (terminal 31), leaving one wire unused.
- Do not directly ground the RS485 network at any point. Ground all devices on the network using their corresponding earthing terminals.
- As always, the grounding wires should not form any closed loops, and all the devices should be earthed to a common ground.
- Connect the RS485 link in a daisy-chained bus, without dropout lines.

- To reduce noise on the network, terminate the RS485 network using 120 Ω resistors at both ends of the network. Use the DIP switch to connect or disconnect the termination resistors. See the following diagram.

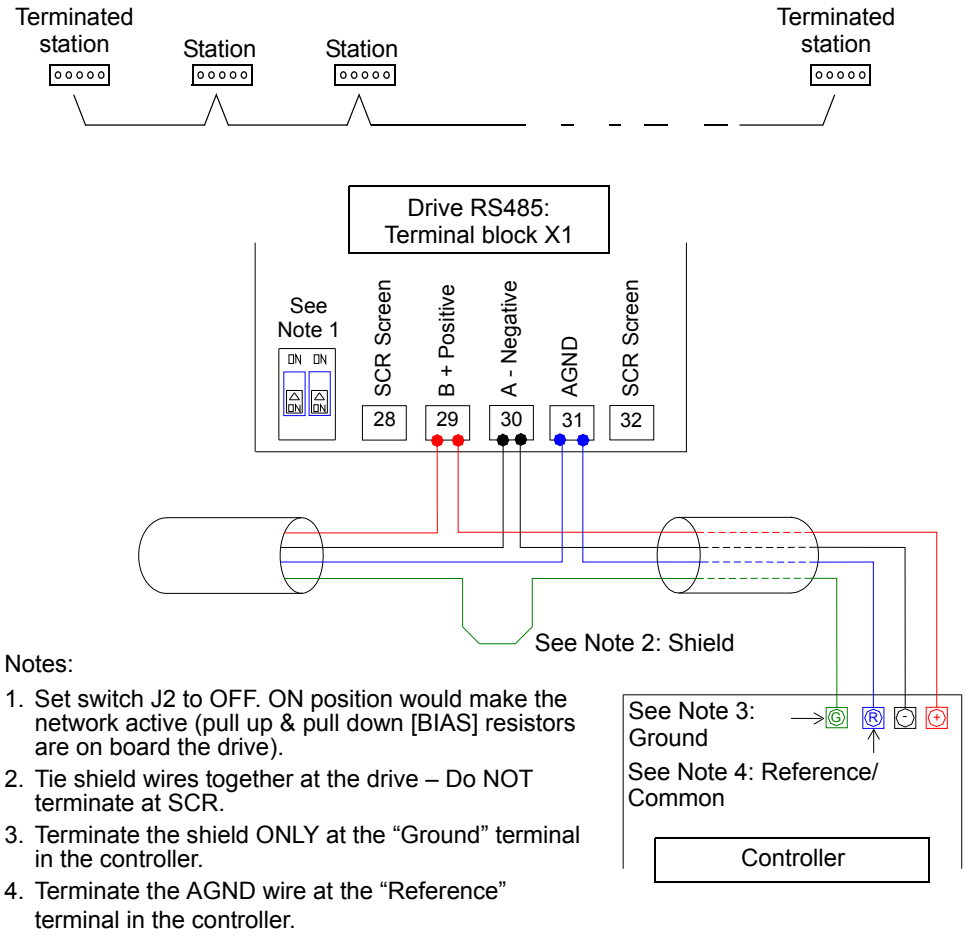

Notes:

1. Set switch J2 to OFF. ON position would make the network active (pull up & pull down [BIAS] resistors are on board the drive).
2. Tie shield wires together at the drive – Do NOT terminate at SCR.
3. Terminate the shield ONLY at the "Ground" terminal in the controller.
4. Terminate the AGND wire at the "Reference" terminal in the controller.

- For configuration information see the following sections:
  - *Communication set-up – EFB* on page *201*
  - *Activate drive control functions – EFB* on page *203*
  - The appropriate EFB protocol specific technical data. For example, *Modbus protocol technical data* on page *211*.

Communication set-up – EFB

Serial communication selection

To activate the serial communication, set parameter 9802 COMM PROT SEL = 1 (STD MODBUS).

Note: If you cannot see the desired selection on the panel, your drive does not have that protocol software in the application memory.

Serial communication configuration

Setting 9802 automatically sets the appropriate default values in parameters that define the communication process. These parameters and descriptions are defined below. In particular, note that the station Id may require adjustment.

Code	Description	Protocol reference
		Modbus
5301	EFB PROTOCOL ID Contains the identification and program revision of the protocol.	Do not edit. Any non-zero value entered for parameter 9802 COMM PROT SEL, sets this parameter automatically. The format is: XXYY, where XX = protocol ID, and YY = program revision.
5302	EFB STATION ID Defines the node address of the RS485 link.	Set each drive on the network with a unique value for this parameter. When this protocol is selected, the default value for this parameter is: 1
	Note: For a new address to take affect, the drive power must be cycled **or** 5302 must first be set to 0 before selecting a new address. Leaving 5302 = 0 places the RS485 channel in reset, disabling communication.	
5303	EFB BAUD RATE Defines the communication speed of the RS485 link in kbits per second (kbits/s). 1.2 kb/s 19.2 kb/s 2.4 kb/s 38.4 kb/s 4.8 kb/s 57.6 kb/s 9.6 kb/s 76.8 kb/s	When this protocol is selected, the default value for this parameter is: 9.6
5304	EFB PARITY Defines the data length, parity and stop bits to be used with the RS485 communication. • The same settings must be used in all on-line stations. 0 = 8 NONE 1 – 8 data bits, no parity, one stop bit. 1 = 8 NONE 2 – 8 data bits, no parity, two stop bits. 2 = 8 EVEN 1 – 8 data bits, even parity, one stop bit. 3 = 8 ODD 1 – 8 data bits, odd parity, one stop bit.	When this protocol is selected, the default value for this parameter is: 1
5305	EFB CTRL PROFILE Selects the communication profile used by the EFB protocol. 0 = ABB DRV LIM – Operation of Control/Status Words conforms to ABB Drives Profile, as used in ACS400. 1 = DCU PROFILE – Operation of Control/Status Words conforms to 32-bit DCU Profile. 2 = ABB DRV FULL – Operation of Control/Status Words conforms to ABB Drives Profile, as used in ACS600/800.	When this protocol is selected, the default value for this parameter is: 0

Note: After any changes to the communication settings, the protocol must be reactivated by either cycling the drive power, or by clearing and then restoring the station Id (5302).

Activate drive control functions – EFB

Controlling the drive

Fieldbus control of various drive functions requires configuration to:

- tell the drive to accept fieldbus control of the function
- define as a fieldbus input, any drive data required for control
- define as a fieldbus output, any control data required by the drive.

The following sections describe, at a general level, the configuration required for each control function. For the protocol-specific details, see the document supplied with the FBA module.

Start/Stop Direction control

Using the fieldbus for start/stop/direction control of the drive requires:

- drive parameter values set as defined below
- fieldbus controller supplied command(s) in the appropriate location. (The location is defined by the Protocol Reference, which is protocol dependent.)

Drive parameter		Value	Description	Modbus[1] protocol reference	
				ABB DRV	DCU PROFILE
1001	EXT1 COMMANDS	10 (COMM)	Start/Stop by fieldbus with Ext1 selected.	40001 bits 0…3	40031 bits 0, 1
1002	EXT2 COMMANDS	10 (COMM)	Start/Stop by fieldbus with Ext2 selected.	40001 bits 0…3	40031 bits 0, 1
1003	DIRECTION	3 (REQUEST)	Direction by fieldbus.	4002/4003[2]	40031 bit 3

[1] For Modbus, the protocol reference can depend on the profile used, hence two columns in these tables. One column refers to the ABB Drives profile, selected when parameter 5305 = 0 (ABB DRV LIM) or 5305 = 2 (ABB DRV FULL). The other column refers to the DCU profile selected when parameter 5305 = 1 (DCU PROFILE). See section *ABB control profiles technical data* on page *219*.

[2] The reference provides direction control – a negative reference provides reverse rotation.

Input reference select

Using the fieldbus to provide input references to the drive requires:

- drive parameter values set as defined below
- fieldbus controller supplied reference word(s) in the appropriate location. (The location is defined by the Protocol Reference, which is protocol dependent.)

Drive parameter		Value	Description	Modbus protocol reference	
				ABB DRV	DCU PROFILE
1102	EXT1/EXT2 SEL	8 (COMM)	Reference set selection by fieldbus.	40001 bit 11	40031 bit 5
1103	REF1 SELECT	8 (COMM)	Input reference 1 by fieldbus.	40002	
1106	REF2 SELECT	8 (COMM)	Input reference 2 by fieldbus.	40003	

Reference Scaling

Where required, REFERENCES can be scaled. See the following, as appropriate:

- Modbus Register *40002* in section *Modbus protocol technical data* on page *211*
- *Reference scaling* in section *ABB control profiles technical data* on page *219*.

Miscellaneous drive control

Using the fieldbus for miscellaneous drive control requires:

- drive parameter values set as defined below
- fieldbus controller supplied command(s) in the appropriate location. (The location is defined by the Protocol Reference, which is protocol dependent.)

Drive parameter		Value	Description	Modbus protocol reference	
				ABB DRV	DCU PROFILE
1601	RUN ENABLE	7 (COMM)	Run enable by fieldbus.	40001 bit 3	40031 bit 6 (inverted)
1604	FAULT RESET SEL	8 (COMM)	Fault reset by fieldbus.	40001 bit 7	40031 bit 4
1606	LOCAL LOCK	8 (COMM)	Source for local lock selection is the fieldbus.	Does not apply	40031 bit 14
1607	PARAM SAVE	1 (SAVE)	Saves altered parameters to memory (then value returns to 0).	41607	
1608	START ENABLE 1	7 (COMM)	Source for start enable 1 is the fieldbus Command word.	Does not apply.	40032 bit 2
1609	START ENABLE 2	7 (COMM)	Source for start enable 2 is the fieldbus Command word.		40032 bit 3
2013	MIN TORQUE SEL	7 (COMM)	Source for minimum torque selection is the fieldbus.		40031 bit 15
2014	MAX TORQUE SEL	7 (COMM)	Source for maximum torque selection is the fieldbus.		
2201	ACC/DEC 1/2 SEL	7 (COMM)	Source for ramp pair selection is the fieldbus.		40031 bit 10

Relay output control

Using the fieldbus for relay output control requires:

- drive parameter values set as defined below
- fieldbus controller supplied, binary coded, relay command(s) in the appropriate location. (The location is defined by the Protocol Reference, which is protocol dependent.)

Drive parameter		Value	Description	Modbus protocol reference	
				ABB DRV	DCU PROFILE
1401	RELAY OUTPUT 1	35 (COMM)	Relay Output 1 controlled by fieldbus.	40134 bit 0 or 00033	
1402	RELAY OUTPUT 2	35 (COMM)	Relay Output 2 controlled by fieldbus.	40134 bit 1 or 00034	
1403	RELAY OUTPUT 3	35 (COMM)	Relay Output 3 controlled by fieldbus.	40134 bit 2 or 00035	
1410[1]	RELAY OUTPUT 4	35 (COMM)	Relay Output 4 controlled by fieldbus.	40134 bit 3 or 00036	
1411[1]	RELAY OUTPUT 5	35 (COMM)	Relay Output 5 controlled by fieldbus.	40134 bit 4 or 00037	
1412[1]	RELAY OUTPUT 6	35 (COMM)	Relay Output 6 controlled by fieldbus.	40134 bit 5 or 00038	

[1] More than 3 relays requires the addition of a relay extension module.

Note: Relay status feedback occurs without configuration as defined below.

Drive parameter		Description	Modbus protocol reference	
			ABB DRV	DCU PROFILE
0122	RO 1-3 STATUS	Relay 1…3 status.	40122	
0123	RO 4-6 STATUS	Relay 4…6 status.	40123	

Analog output control

Using the fieldbus for analog output control (e.g. PID setpoint) requires:

- drive parameter values set as defined below
- fieldbus controller supplied analog value(s) in the appropriate location. (The location is defined by the Protocol Reference, which is protocol dependent.)

Drive parameter		Value	Description	Modbus protocol reference	
				ABB DRV	DCU PROFILE
1501	AO1 CONTENT SEL	135 (COMM VALUE 1)	Analog Output 1 controlled by writing to parameter 0135.	–	
0135	COMM VALUE 1	–		40135	
1507	AO2 CONTENT SEL	136 (COMM VALUE 2)	Analog Output 2 controlled by writing to parameter 0136.	–	
0136	COMM VALUE 2	–		40136	

PID control setpoint source

Using the following settings to select the fieldbus as the setpoint source for PID loops:

Drive parameter		Value	Description	Modbus protocol reference	
				ABB DRV	DCU PROFILE
4010	SET POINT SEL (Set 1)	8 (COMM VALUE 1) 9 (COMM+AI1) 10 (COMM*AI1)	Setpoint is input reference 2 (+/-/* AI1)	40003	
4110	SET POINT SEL (Set 2)				
4210	SET POINT SEL (Ext/Trim)				

Communication fault

When using fieldbus control, specify the drive's action if serial communication is lost.

Drive parameter		Value	Description
3018	COMM FAULT FUNC	0 (NOT SEL) 1 (FAULT) 2 (CONST SP7) 3 (LAST SPEED)	Set for appropriate drive response.
3019	COMM FAULT TIME	Set time delay before acting on a communication loss.	

Feedback from the drive – EFB

Pre-defined feedback

Inputs to the controller (drive outputs) have pre-defined meanings established by the protocol. This feedback does not require drive configuration. The following table lists a sample of feedback data. For a complete listing, see input word/point/object listings in the technical data for the appropriate protocol starting on page *211*.

Drive parameter		Modbus protocol reference	
		ABB DRV	DCU PROFILE
0102	SPEED	40102	
0103	OUTPUT FREQ	40103	
0104	CURRENT	40104	
0105	TORQUE	40105	
0106	POWER	40106	
0107	DC BUS VOLTAGE	40107	
0109	OUTPUT VOLTAGE	40109	
0301	FB CMD WORD1 – bit 0 (STOP)	40301 bit 0	
0301	FB CMD WORD1 1 – bit 2 (REV)	40301 bit 2	
0118	DI 1-3 STATUS – bit 0 (DI3)	40118	

Note: With Modbus, any parameter can be accessed using the format: "4" followed by the parameter number.

Actual value scaling

The scaling of actual values can be protocol dependent. In general, for Actual Values, scale the feedback integer using the parameter's resolution. (See section *Complete parameter list* on page *87* for parameter resolutions.) For example:

Feedback integer	Parameter resolution	(Feedback integer) · (Parameter resolution) = Scaled value
1	0.1 mA	1 · 0.1 mA = 0.1 mA
10	0.1%	10 · 0.1% = 1%

Where parameters are in percent, the *Complete parameter descriptions* section specifies what parameter corresponds to 100%. In such cases, to convert from percent to engineering units, multiply by the value of the parameter that defines 100% and divide by 100%.

For example:

Feedback integer	Parameter resolution	Value of the parameter that defines 100%	(Feedback integer) · (Parameter resolution) · (Value of 100% ref.) / 100% = Scaled value
10	0.1%	1500 rpm[1]	10 · 0.1% · 1500 RPM / 100% = 15 rpm
100	0.1%	500 Hz[2]	100 · 0.1% · 500 Hz / 100% = 50 Hz

[1] Assuming, for the sake of this example, that the Actual Value uses parameter 9908 MOT NOM SPEED as the 100% reference and that 9908 = 1500 rpm.

[2] Assuming, for the sake of this example, that the Actual Value uses parameter 9907 MOT NOM FREQ as the 100% reference and that 9907 = 500 Hz.

Diagnostics – EFB

Fault queue for drive diagnostics

For general ACS550 diagnostics information, see chapter *Diagnostics* on page *253*. The three most recent ACS550 faults are reported to the fieldbus as defined below.

Drive parameter		Modbus protocol reference	
		ABB DRV	DCU PROFILE
0401	LAST FAULT	40401	
0412	PREVIOUS FAULT 1	40412	
0413	PREVIOUS FAULT 2	40413	

Serial communication diagnostics

Network problems can be caused by multiple sources. Some of these sources are:

- loose connections
- incorrect wiring (including swapped wires)
- bad grounding
- duplicate station numbers
- incorrect setup of drives or other devices on the network.

The major diagnostic features for fault tracing on an EFB network include *Group 53: EFB PROTOCOL* parameters 5306…5309. Section *Complete parameter descriptions* on page *102* describes these parameters in detail.

Diagnostic situations

The sub-sections below describe various diagnostic situations – the problem symptoms and corrective actions.

Normal operation

During normal network operation, 5306…5309 parameter values act as follows at each drive:

- 5306 EFB OK MESSAGES advances (advances for each message properly received and addressed to this drive).
- 5307 EFB CRC ERRORS does not advance at all (advances when an invalid message CRC is received).
- 5308 EFB UART ERRORS does not advance at all (advances when character format errors are detected, such as parity or framing errors).
- 5309 EFB STATUS value varies depending on network traffic.

Loss of communication

The ACS550 behavior, if communication is lost, was configured earlier in section *Communication fault* on page *206*. The parameters are 3018 COMM FAULT FUNC and 3019 COMM FAULT TIME. Section *Complete parameter descriptions* on page *102* describes these parameters in detail.

No master station on line

If no master station is on line: Neither the EFB OK MESSAGES nor the errors (5307 EFB CRC ERRORS and 5308 EFB UART ERRORS) increase on any of the stations.

To correct:

- Check that a network master is connected and properly programmed on the network.
- Verify that the cable is connected and that it is not cut or short circuited.

Duplicate stations

If two or more stations have duplicate numbers:

- Two or more drives cannot be addressed.
- Every time there is a read or write to one particular station, the value for 5307 EFB CRC ERRORS or 5308 EFB UART ERRORS advances.

To correct: Verify the station numbers of all stations. Change conflicting station numbers.

Swapped wires

If the communication wires are swapped (terminal A on one drive is connected to terminal B on another):

- The value of 5306 EFB OK MESSAGES does not advance.
- The values of 5307 EFB CRC ERRORS and 5308 EFB UART ERRORS are advancing.

To correct: Check that the RS-485 lines are not swapped.

Fault 28 – Serial 1 Err

If the drive's control panel shows fault code 28, SERIAL 1 ERR, check for either of the following:

- The master system is down. To correct, resolve problem with master system.
- The communication connection is bad. To correct, check communication connection at the drive.
- The time-out selection for the drive is too short for the given installation. The master is not polling the drive within the specified time-out delay. To correct, increase the time set by parameter 3019 COMM FAULT TIME.

Faults 31…33 – EFB1…EFB3

The three EFB fault codes listed for the drive in chapter *Diagnostics* on page *253* (fault codes 31…33) are not used.

Intermittent off-line occurrences

The problems described above are the most common problems encountered with ACS550 serial communication. Intermittent problems might also be caused by:

- marginally loose connections
- wear on wires caused by equipment vibrations
- insufficient grounding and shielding on both the devices and on the communication cables.

Modbus protocol technical data

Overview

The Modbus® protocol was introduced by Modicon, Inc. for use in control environments featuring Modicon programmable controllers. Due to its ease of use and implementation, this common PLC language was quickly adopted as a de-facto standard for integration of a wide variety of master controllers and slave devices.

Modbus is a serial, asynchronous protocol. Transactions are half-duplex, featuring a single Master controlling one or more Slaves. While RS232 can be used for point-to-point communication between a single Master and a single Slave, a more common implementation features a multi-drop RS485 network with a single Master controlling multiple Slaves. The ACS550 features RS485 for its Modbus physical interface.

RTU

The Modbus specification defines two distinct transmission modes: ASCII and RTU. The ACS550 supports RTU only.

Feature summary

The following Modbus function codes are supported by the ACS550.

Function	Code (Hex)	Description
Read Coil Status	0x01	Read discrete output status. For the ACS550, the individual bits of the control word are mapped to Coils 1…16. Relay outputs are mapped sequentially beginning with Coil 33 (e.g. RO1=Coil 33).
Read Discrete Input Status	0x02	Read discrete inputs status. For the ACS550, the individual bits of the status word are mapped to Inputs 1…16 or 1…32, depending on the active profile. Terminal inputs are mapped sequentially beginning with Input 33 (e.g. DI1=Input 33).
Read Multiple Holding Registers	0x03	Read multiple holding registers. For the ACS550, the entire parameter set is mapped as holding registers, as well as command, status and reference values.
Read Multiple Input Registers	0x04	Read multiple input registers. For the ACS550, the 2 analog input channels are mapped as input registers 1 & 2.
Force Single Coil	0x05	Write a single discrete output. For the ACS550, the individual bits of the control word are mapped to Coils 1…16. Relay outputs are mapped sequentially beginning with Coil 33 (e.g. RO1=Coil 33).
Write Single Holding Register	0x06	Write single holding register. For the ACS550, the entire parameter set is mapped as holding registers, as well as command, status and reference values.
Diagnostics	0x08	Perform Modbus diagnostics. Subcodes for Query (0x00), Restart (0x01) & Listen Only (0x04) are supported.
Force Multiple Coils	0x0F	Write multiple discrete outputs. For the ACS550, the individual bits of the control word are mapped to Coils 1…16. Relay outputs are mapped sequentially beginning with Coil 33 (e.g. RO1=Coil 33).
Write Multiple Holding Registers	0x10	Write multiple holding registers. For the ACS550, the entire parameter set is mapped as holding registers, as well as command, status and reference values.
Read/Write Multiple Holding Registers	0x17	This function combines functions 0x03 and 0x10 into a single command.

Mapping summary

The following table summarizes the mapping between the ACS550 (parameters and I/0) and Modbus reference space. For details, see *Modbus addressing* below.

ACS550	Modbus reference	Supported function codes
• Control Bits • Relay Outputs	Coils(0xxxx)	• 01 – Read Coil Status • 05 – Force Single Coil • 15 – Force Multiple Coils
• Status Bits • Discrete Inputs	Discrete Inputs(1xxxx)	• 02 – Read Input Status
• Analog Inputs	Input Registers(3xxxxx)	• 04 – Read Input Registers
• Parameters • Control/Status Words • References	Holding Registers(4xxxx)	• 03 – Read 4X Registers • 06 – Preset Single 4X Register • 16 – Preset Multiple 4X Registers • 23 – Read/Write 4X Registers

Communication profiles

When communicating by Modbus, the ACS550 supports multiple profiles for control and status information. Parameter 5305 EFB CTRL PROFILE selects the profile used.

- ABB DRV LIM – The primary (and default) profile is the ABB DRV LIM profile. This implementation of the ABB Drives profile standardizes the control interface with ACS400 drives. The ABB Drives profile is based on the PROFIBUS interface. It is discussed in detail in the following sections.
- DCU PROFILE – The DCU PROFILE profile extends the control and status interface to 32 bits. It is the internal interface between the main drive application and the embedded fieldbus environment.
- ABB DRV FULL – ABB DRV FULL is the implementation of the ABB Drives profile that standardizes the control interface with ACS600 and ACS800 drives. This implementation supports two control word bits not supported by the ABB DRV LIM implementation.

Modbus addressing

With Modbus, each function code implies access to a specific Modbus reference set. Thus, the leading digit is not included in the address field of a Modbus message.

Note: The ACS550 supports the zero-based addressing of the Modbus specification. Holding register 40002 is addressed as 0001 in a Modbus message. Similarly, coil 33 is addressed as 0032 in a Modbus message.

Refer again to the *Mapping summary* above. The following sections describe, in detail, the mapping to each Modbus reference set.

0xxxx Mapping – Modbus coils. The drive maps the following information to the 0xxxx Modbus set called Modbus Coils:

- bit-wise map of the CONTROL WORD (selected using parameter 5305 EFB CTRL PROFILE). The first 32 coils are reserved for this purpose.

- relay output states, numbered sequentially beginning with coil 00033.

The following table summarizes the 0xxxx reference set:

Modbus ref.	**Internal location (all profiles)**	ABB DRV LIM **(5305 = 0)**	DCU PROFILE **(5305 = 1)**	ABB DRV FULL **(5305 = 2)**
00001	CONTROL WORD – Bit 0	OFF1[1]	STOP	OFF1[1]
00002	CONTROL WORD – Bit 1	OFF2[1]	START	OFF2[1]
00003	CONTROL WORD – Bit 2	OFF3[1]	REVERSE	OFF3[1]
00004	CONTROL WORD – Bit 3	START	LOCAL	START
00005	CONTROL WORD – Bit 4	N/A	RESET	RAMP_OUT_ZERO[1]
00006	CONTROL WORD – Bit 5	RAMP_HOLD[1]	EXT2	RAMP_HOLD[1]
00007	CONTROL WORD – Bit 6	RAMP_IN_ZERO[1]	RUN_DISABLE	RAMP_IN_ZERO[1]
00008	CONTROL WORD – Bit 7	RESET	STPMODE_R	RESET
00009	CONTROL WORD – Bit 8	N/A	STPMODE_EM	N/A
00010	CONTROL WORD – Bit 9	N/A	STPMODE_C	N/A
00011	CONTROL WORD – Bit 10	N/A	RAMP_2	REMOTE_CMD[1]
00012	CONTROL WORD – Bit 11	EXT2	RAMP_OUT_0	EXT2
00013	CONTROL WORD – Bit 12	N/A	RAMP_HOLD	N/A
00014	CONTROL WORD – Bit 13	N/A	RAMP_IN_0	N/A
00015	CONTROL WORD – Bit 14	N/A	REQ_LOCALLOCK	N/A
00016	CONTROL WORD – Bit 15	N/A	TORQLIM2	N/A
00017	CONTROL WORD – Bit 16	Does not apply	FBLOCAL_CTL	Does not apply
00018	CONTROL WORD – Bit 17		FBLOCAL_REF	
00019	CONTROL WORD – Bit 18		START_DISABLE1	
00020	CONTROL WORD – Bit 19		START_DISABLE2	
00021… **0**0032	Reserved	Reserved	Reserved	Reserved
00033	RELAY OUTPUT 1	Relay Output 1	Relay Output 1	Relay Output 1
00034	RELAY OUTPUT 2	Relay Output 2	Relay Output 2	Relay Output 2
00035	RELAY OUTPUT 3	Relay Output 3	Relay Output 3	Relay Output 3
00036	RELAY OUTPUT 4	Relay Output 4	Relay Output 4	Relay Output 4
00037	RELAY OUTPUT 5	Relay Output 5	Relay Output 5	Relay Output 5
00038	RELAY OUTPUT 6	Relay Output 6	Relay Output 6	Relay Output 6

[1] = Active low

For the 0xxxx registers:

- Status is always readable.
- Forcing is allowed by user configuration of the drive for fieldbus control.
- Additional relay outputs are added sequentially.

The ACS550 supports the following Modbus function codes for coils:

Function code	Description
01	Read coil status
05	Force single coil
15 (0x0F Hex)	Force multiple coils

1xxxx Mapping – Modbus discrete inputs. The drive maps the following information to the 1xxxx Modbus set called Modbus Discrete Inputs:

- bit-wise map of the STATUS WORD (selected using parameter 5305 EFB CTRL PROFILE). The first 32 inputs are reserved for this purpose.
- discrete hardware inputs, numbered sequentially beginning with input 33.

The following table summarizes the 1xxxx reference set:

Modbus ref.	Internal location (all profiles)	ABB DRV (5305 = 0 OR 2)	DCU PROFILE (5305 = 1)
10001	STATUS WORD – Bit 0	RDY_ON	READY
10002	STATUS WORD – Bit 1	RDY_RUN	ENABLED
10003	STATUS WORD – Bit 2	RDY_REF	STARTED
10004	STATUS WORD – Bit 3	TRIPPED	RUNNING
10005	STATUS WORD – Bit 4	OFF_2_STA[1]	ZERO_SPEED
10006	STATUS WORD – Bit 5	OFF_3_STA[1]	ACCELERATE
10007	STATUS WORD – Bit 6	SWC_ON_INHIB	DECELERATE
10008	STATUS WORD – Bit 7	ALARM	AT_SETPOINT
10009	STATUS WORD – Bit 8	AT_SETPOINT	LIMIT
10010	STATUS WORD – Bit 9	REMOTE	SUPERVISION
10011	STATUS WORD – Bit 10	ABOVE_LIMIT	REV_REF
10012	STATUS WORD – Bit 11	EXT2	REV_ACT
10013	STATUS WORD – Bit 12	RUN_ENABLE	PANEL_LOCAL
10014	STATUS WORD – Bit 13	N/A	FIELDBUS_LOCAL
10015	STATUS WORD – Bit 14	N/A	EXT2_ACT
10016	STATUS WORD – Bit 15	N/A	FAULT
10017	STATUS WORD – Bit 16	Reserved	ALARM
10018	STATUS WORD – Bit 17	Reserved	REQ_MAINT
10019	STATUS WORD – Bit 18	Reserved	DIRLOCK
10020	STATUS WORD – Bit 19	Reserved	LOCALLOCK
10021	STATUS WORD – Bit 20	Reserved	CTL_MODE
10022	STATUS WORD – Bit 21	Reserved	Reserved
10023	STATUS WORD – Bit 22	Reserved	Reserved
10024	STATUS WORD – Bit 23	Reserved	Reserved
10025	STATUS WORD – Bit 24	Reserved	Reserved
10026	STATUS WORD – Bit 25	Reserved	Reserved
10027	STATUS WORD – Bit 26	Reserved	REQ_CTL

Modbus ref.	Internal location (all profiles)	ABB DRV (5305 = 0 OR 2)	DCU PROFILE (5305 = 1)
10028	STATUS WORD – Bit 27	Reserved	REQ_REF1
10029	STATUS WORD – Bit 28	Reserved	REQ_REF2
10030	STATUS WORD – Bit 29	Reserved	REQ_REF2EXT
10031	STATUS WORD – Bit 30	Reserved	ACK_STARTINH
10032	STATUS WORD – Bit 31	Reserved	ACK_OFF_ILCK
10033	DI1	DI1	DI1
10034	DI2	DI2	DI2
10035	DI3	DI3	DI3
10036	DI4	DI4	DI4
10037	DI5	DI5	DI5
10038	DI6	DI6	DI6

[1] = Active low

For the 1xxxx registers:

- Additional discrete inputs are added sequentially.

The ACS550 supports the following Modbus function codes for discrete inputs:

Function code	Description
02	Read input status

3xxxx Mapping – Modbus inputs. The drive maps the following information to the 3xxxx Modbus addresses called Modbus input registers:

- any user defined analog inputs.

The following table summarizes the input registers:

Modbus reference	ACS550 all profiles	Remarks
30001	AI1	This register shall report the level of Analog Input 1 (0…100%).
30002	AI2	This register shall report the level of Analog Input 2 (0…100%).

The ACS550 supports the following Modbus function codes for 3xxxx registers:

Function code	Description
04	Read 3xxxx input status

4xxxx Register mapping. The drive maps its parameters and other data to the 4xxxx holding registers as follows:

- 40001…40099 map to drive control and actual values. These registers are described in the table below.
- 40101…49999 map to drive parameters 0101…9999. Register addresses that do not correspond to drive parameters are invalid. If there is an attempt to read or write outside the parameter addresses, the Modbus interface returns an exception code to the controller.

The following table summarizes the 4xxxx drive control registers 40001…40099 (for 4xxxx registers above 40099, see the drive parameter list, e.g. 40102 is parameter 0102):

Modbus register		Access	Remarks
40001	CONTROL WORD	R/W	Maps directly to the profile'S CONTROL WORD. Supported only if 5305 = 0 or 2 (ABB Drives profile). Parameter 5319 holds a copy in hex format.
40002	Reference 1	R/W	Range = 0…+20000 (scaled to 0…1105 REF1 MAX), or -20000…0 (scaled to 1105 REF1 MAX…0).
40003	Reference 2	R/W	Range = 0…+10000 (scaled to 0…1108 REF2 MAX), or -10000…0 (scaled to 1108 REF2 MAX…0).
40004	STATUS WORD	R	Maps directly to the profile'S STATUS WORD. Supported only if 5305 = 0 or 2 (ABB Drives profile). Parameter 5320 holds a copy in hex format.
40005	Actual 1 (select using 5310)	R	By default, stores a copy of 0103 OUTPUT FREQ. Use parameter 5310 to select a different actual value for this register.
40006	Actual 2 (select using 5311)	R	By default, stores a copy of 0104 CURRENT. Use parameter 5311 to select a different actual value for this register.
40007	Actual 3 (select using 5312)	R	By default, stores nothing. Use parameter 5312 to select an actual value for this register.
40008	Actual 4 (select using 5313)	R	By default, stores nothing. Use parameter 5313 to select an actual value for this register.
40009	Actual 5 (select using 5314)	R	By default, stores nothing. Use parameter 5314 to select an actual value for this register.
40010	Actual 6 (select using 5315)	R	By default, stores nothing. Use parameter 5315 to select an actual value for this register.
40011	Actual 7 (select using 5316)	R	By default, stores nothing. Use parameter 5316 to select an actual value for this register.
40012	Actual 8 (select using 5317)	R	By default, stores nothing. Use parameter 5317 to select an actual value for this register.
40031	ACS550 CONTROL WORD LSW	R/W	Maps directly to the Least Significant Word of the DCU profile's CONTROL WORD. Supported only if 5305 = 1. See parameter 0301.
40032	ACS550 CONTROL WORD MSW	R	Maps directly to the Most Significant Word of the DCU profile's CONTROL WORD. Supported only if 5305 = 1. See parameter 0302.
40033	ACS550 STATUS WORD LSW	R	Maps directly to the Least Significant Word of the DCU profile's STATUS WORD. Supported only if 5305 = 1. See parameter 0303.
40034	ACS550 STATUS WORD MSW	R	Maps directly to the Most Significant Word of the DCU profile's STATUS WORD. Supported only if 5305 = 1. See parameter 0304.

For the Modbus protocol, drive parameters in *Group 53: EFB PROTOCOL* report the parameter mapping to 4xxxx Registers.

Code	Description
5310	EFB PAR 10 Specifies the parameter mapped to Modbus register 40005.
5311	EFB PAR 11 Specifies the parameter mapped to Modbus register 40006.
5312	EFB PAR 12 Specifies the parameter mapped to Modbus register 40007.
5313	EFB PAR 13 Specifies the parameter mapped to Modbus register 40008.
5314	EFB PAR 14 Specifies the parameter mapped to Modbus register 40009.
5315	EFB PAR 15 Specifies the parameter mapped to Modbus register 40010.
5316	EFB PAR 16 Specifies the parameter mapped to Modbus register 40011.
5317	EFB PAR 17 Specifies the parameter mapped to Modbus register 40012.
5318	EFB PAR 18 Sets additional delay in milliseconds before the ACS550 begins transmitting response to the master request.
5319	EFB PAR 19 Holds a copy (in hex) of the CONTROL WORD, Modbus register 40001.
5320	EFB PAR 20 Holds a copy (in hex) of the STATUS WORD, Modbus register 40004.

Except where restricted by the drive, all parameters are available for both reading and writing. The parameter writes are verified for the correct value and for a valid register addresses.

Note: Parameter writes through standard Modbus are always volatile i.e. modified values are not automatically stored to permanent memory. Use parameter 1607 PARAM SAVE to save all altered values.

The ACS550 supports the following Modbus function codes for 4xxxx registers:

Function code	Description
03	Read holding 4xxxx registers
06	Preset single 4xxxx register
16 (0x10 Hex)	Preset multiple 4xxxx registers
23 (0x17 Hex)	Read/write 4xxxx registers

Actual values

The contents of the register addresses 40005…40012 are ACTUAL VALUES and are:

- specified using parameters 5310…5317
- Read-only values containing information on the operation of the drive
- 16-bit words containing a sign bit and a 15-bit integer
- when negative values, written as the two's complement of the corresponding positive value
- scaled as described earlier in section *Actual value scaling* on page *207*.

Exception codes

Exception codes are serial communication responses from the drive. The ACS550 supports the standard Modbus exception codes defined below.

Exception code	Name	Meaning
01	ILLEGAL FUNCTION	Unsupported Command
02	ILLEGAL DATA ADDRESS	The data address received in the query is not allowable. It is not a defined parameter/group.
03	ILLEGAL DATA VALUE	A value contained in the query data field is not an allowable value for the ACS550, because it is one of the following: • Outside min. or max. limits. • Parameter is read-only. • Message is too long. • Parameter write not allowed when start is active. • Parameter write not allowed when factory macro is selected.

ABB control profiles technical data

Overview

ABB Drives profile

The ABB Drives profile provides a standard profile that can be used on multiple protocols, including Modbus and the protocols available on the FBA module. Two implementations of the ABB Drives profile are available:

- ABB DRV FULL – This implementation standardizes the control interface with ACS600 and ACS800 drives.
- ABB DRV LIM – This implementation standardizes the control interface with ACS400 drives. This implementation does not support two control word bits supported by ABB DRV FULL.

Except as noted, the following "ABB Drives Profile" descriptions apply to both implementations.

DCU profile

The DCU profile extends the control and status interface to 32 bits. It is the internal interface between the main drive application and the embedded fieldbus environment.

Control Word

The CONTROL WORD is the principal means for controlling the drive from a fieldbus system. The fieldbus master station sends the CONTROL WORD to the drive. The drive switches between states according to the bit-coded instructions in the CONTROL WORD. Using the CONTROL WORD requires that:

- The drive is in remote (REM) control.
- The serial communication channel is defined as the source for controlling commands (set using parameters such as 1001 EXT1 COMMANDS, 1002 EXT2 COMMANDS and 1102 EXT1/EXT2 SEL).
- The serial communication channel used is configured to use an ABB control profile. For example, to use the control profile ABB DRV FULL requires both parameter 9802 COMM PROT SEL = 1 (STD MODBUS) and parameter 5305 EFB CTRL PROFILE = 2 (ABB DRV FULL).

ABB Drives profile

The following table and the state diagram later in this sub-section describe the CONTROL WORD content for the ABB Drives profile.

ABB Drives profile CONTROL WORD (See parameter 5319)				
Bit	**Name**	**Value**	**Commanded state**	**Comments**
0	OFF1 CONTROL	1	READY TO OPERATE	Enter READY TO OPERATE
		0	EMERGENCY OFF	Drive ramps to stop according to currently active deceleration ramp (2203 or 2205) Normal command sequence: • Enter OFF1 ACTIVE • Proceed to READY TO SWITCH ON, unless other interlocks (OFF2, OFF3) are active.
1	OFF2 CONTROL	1	OPERATING	Continue operation (OFF2 inactive)
		0	EMERGENCY OFF	Drive coasts to stop. Normal command sequence: • Enter OFF2 ACTIVE • Proceed to SWITCHON INHIBITED
2	OFF3 CONTROL	1	OPERATING	Continue operation (OFF3 inactive)
		0	EMERGENCY STOP	Drive stops within time specified by parameter 2208. Normal command sequence: • Enter OFF3 ACTIVE • Proceed to SWITCH ON INHIBITED **WARNING!** Be sure motor and driven equipment can be stopped using this mode.
3	INHIBIT OPERATION	1	OPERATION ENABLED	Enter OPERATION ENABLED (Note the Run enable signal must be active. See 1601. If 1601 is set to COMM, this bit also actives the Run Enable signal.)
		0	OPERATION INHIBITED	Inhibit operation. Enter OPERATION INHIBITED
4	Unused (**ABB DRV LIM**)			
	RAMP_OUT_ ZERO (**ABB DRV FULL**)	1	NORMAL OPERATION	Enter RAMP FUNCTION GENERATOR: ACCELERATION ENABLED
		0	RFG OUT ZERO	Force ramp function generator output to Zero. Drive ramps to stop (current and DC voltage limits in force).
5	RAMP_HOLD	1	RFG OUT ENABLED	Enable ramp function. Enter RAMP FUNCTION GENERATOR: ACCELERATOR ENABLED
		0	RFG OUT HOLD	Halt ramping (Ramp Function Generator output held)
6	RAMP_IN_ ZERO	1	RFG INPUT ENABLED	Normal operation. Enter OPERATING
		0	RFG INPUT ZERO	Force Ramp Function Generator input to zero.

ABB Drives profile CONTROL WORD (See parameter 5319)				
Bit	**Name**	**Value**	**Commanded state**	**Comments**
7	RESET	0=>1	RESET	Fault reset if an active fault exists (Enter SWITCH-ON INHIBITED). Effective if 1604 = COMM.
		0	OPERATING	Continue normal operation
8…9	Unused			
10	Unused (**ABB DRV LIM**)			
	REMOTE_CMD (**ABB DRV FULL**)	1		Fieldbus control enabled.
		0		• CW ≠ 0 or Ref ≠ 0: Retain last CW and Ref. • CW = 0 and Ref = 0: Fieldbus control enabled. • Ref and deceleration/acceleration ramp are locked.
11	EXT CTRL LOC	1	EXT2 SELECT	Select external control location 2 (EXT2). Effective if 1102 = COMM.
		0	EXT1 SELECT	Select external control location 1 (EXT1). Effective if 1102 = COMM.
12…15	Unused			

DCU Profile

The following tables describe the CONTROL WORD content for the DCU profile.

DCU profile CONTROL WORD (See parameter 0301)				
Bit	**Name**	**Value**	**Command/Req.**	**Comments**
0	STOP	1	Stop	Stops according to either the stop mode parameter or the stop mode requests (bits 7 and 8). Simultaneous STOP and START commands result in a stop command.
		0	(no op)	
1	START	1	Start	
		0	(no op)	
2	REVERSE	1	Reverse direction	This bit XOR'd with the sign of the reference defines direction.
		0	Forward direction	
3	LOCAL	1	Local mode	When the fieldbus sets this bit, it steals control and the drive moves to fieldbus local control mode.
		0	External mode	
4	RESET	-> 1	Reset	Edge sensitive.
		other	(no op)	
5	EXT2	1	Switch to EXT2	
		0	Switch to EXT1	
6	RUN_DISABLE	1	Run disable	Inverted run enable.
		0	Run enable on	
7	STPMODE_R	1	Normal ramp stop mode	
		0	(no op)	

DCU profile CONTROL WORD (See parameter 0301)				
Bit	**Name**	**Value**	**Command/Req.**	**Comments**
8	STPMODE_EM	1	Emergency ramp stop mode	
		0	(no op)	
9	STPMODE_C	1	Coast stop mode	
		0	(no op)	
10	RAMP_2	1	Ramp pair 2	
		0	Ramp pair 1	
11	RAMP_OUT_0	1	Ramp output to 0	
		0	(no op)	
12	RAMP_HOLD	1	Ramp freeze	
		0	(no op)	
13	RAMP_IN_0	1	Ramp input to 0	
		0	(no op)	
14	RREQ_LOCALLOC	1	Local mode lock	In lock, drive will not switch to local mode.
		0	(no op)	
15	TORQLIM2	1	Torque limit pair 2	
		0	Torque limit pair 1	

DCU profile CONTROL WORD (See parameter 0302)				
Bit	**Name**	**Value**	**Function**	**Comments**
16…26	Reserved			
27	REF_CONST	1	Constant speed ref.	These bits are only for supervision purposes.
		0	(no op)	
28	REF_AVE	1	Average speed ref.	
		0	(no op)	
29	LINK_ON	1	Master is detected in link	
		0	Link is down	
30	REQ_STARTINH	1	Start inhibit request is pending	
		0	Start inhibit request is OFF	
31	OFF_INTERLOCK	1	Panel OFF button pressed	For the control panel (or PC tool) this is the OFF button interlock.
		0	(no op)	

Status Word

The contents of the STATUS WORD is status information, sent by the drive to the master station.

ABB Drives profile

The following table and the state diagram later in this sub-section describe the STATUS WORD content for the ABB Drives profile.

ABB Drives profile (EFB) STATUS WORD (See parameter 5320)			
Bit	**Name**	**Value**	**Description (Correspond to states/boxes in the state diagram)**
0	RDY_ON	1	READY TO SWITCH ON
		0	NOT READY TO SWITCH ON
1	RDY_RUN	1	READY TO OPERATE
		0	OFF1 ACTIVE
2	RDY_REF	1	OPERATION ENABLED
		0	OPERATION INHIBITED
3	TRIPPED	0…1	FAULT
		0	No fault
4	OFF_2_STA	1	OFF2 INACTIVE
		0	**OFF2 ACTIVE**
5	OFF_3_STA	1	OFF3 INACTIVE
		0	**OFF3 ACTIVE**
6	SWC_ON_INHIB	1	SWITCH-ON INHIBIT ACTIVE
		0	SWITCH-ON INHIBIT NOT ACTIVE
7	ALARM	1	Alarm (See section *Alarm listing* on page *261* for details on alarms.)
		0	No alarm
8	AT_SETPOINT	1	OPERATING**.** Actual value equals (within tolerance limits) the reference value.
		0	Actual value is outside tolerance limits (not equal to reference value).
9	REMOTE	1	Drive control location: REMOTE (EXT1 or EXT2)
		0	Drive control location: LOCAL
10	ABOVE_LIMIT	1	Supervised parameter's value ≥ supervision high limit. Bit remains "1" until supervised parameter's value < supervision low limit. See *Group 32: SUPERVISION*.
		0	Supervised parameter's value < supervision low limit. Bit remains "0" until supervised parameter's value > supervision high limit. See *Group 32: SUPERVISION*.
11	EXT CTRL LOC	1	External control location 2 (EXT2) selected
		0	External control location 1 (EXT1) selected
12	EXT RUN ENABLE	1	External Run Enable signal received
		0	No External Run Enable signal received
13…15	Unused		

DCU profile

The following tables describe the STATUS WORD content for the DCU profile.

DCU profile STATUS WORD (See parameter 0303)			
Bit	**Name**	**Value**	**Status**
0	READY	1	Drive is ready to receive start command.
		0	Drive is not ready.
1	ENABLED	1	External run enable signal received.
		0	No external run enable signal received.
2	STARTED	1	Drive has received start command.
		0	Drive has not received start command.
3	RUNNING	1	Drive is modulating.
		0	Drive is not modulating.
4	ZERO_SPEED	1	Drive is at zero speed.
		0	Drive has not reached zero speed.
5	ACCELERATE	1	Drive is accelerating.
		0	Drive is not accelerating.
6	DECELERATE	1	Drive is decelerating.
		0	Drive is not decelerating.
7	AT_SETPOINT	1	Drive is at setpoint.
		0	Drive has not reached setpoint.
8	LIMIT	1	Operation is limited by *Group 20: LIMITS* settings.
		0	Operation is within *Group 20: LIMITS* settings.
9	SUPERVISION	1	A supervised parameter (*Group 32: SUPERVISION*) is outside its limits.
		0	All supervised parameters are within limits.
10	REV_REF	1	Drive reference is in reverse direction.
		0	Drive reference is in forward direction.
11	REV_ACT	1	Drive is running in reverse direction.
		0	Drive is running in forward direction.
12	PANEL_LOCAL	1	Control is in control panel (or PC tool) local mode.
		0	Control is not in control panel local mode.
13	FIELDBUS_LOCAL	1	Control is in fieldbus local mode (steals control panel local).
		0	Control is not in fieldbus local mode.
14	EXT2_ACT	1	Control is in EXT2 mode.
		0	Control is in EXT1 mode.
15	FAULT	1	Drive is in a fault state.
		0	Drive is not in a fault state.

DCU profile STATUS WORD (See parameter 0304)			
Bit	**Name**	**Value**	**Status**
16	ALARM	1	An alarm is on.
		0	No alarms are on.
17	REQ_MAINT	1	A maintenance request is pending.
		0	No maintenance request is pending.
18	DIRLOCK	1	Direction lock is ON. (Direction change is locked out.)
		0	Direction lock is OFF.
19	LOCALLOCK	1	Local mode lock is ON. (Local mode is locked out.)
		0	Local mode lock is OFF.
20	CTL_MODE	1	Drive is in vector control mode.
		0	Drive is in scalar control mode.
21…25	Reserved		
26	REQ_CTL	1	Copy the control word
		0	(no op)
27	REQ_REF1	1	Reference 1 requested in this channel.
		0	Reference 1 is not requested in this channel.
28	REQ_REF2	1	Reference 2 requested in this channel.
		0	Reference 2 is not requested in this channel.
29	REQ_REF2EXT	1	External PID reference 2 requested in this channel.
		0	External PID reference 2 is not requested in this channel.
30	ACK_STARTINH	1	A start inhibit from this channel is granted.
		0	A start inhibit from this channel is not granted.
31	ACK_OFF_ILCK	1	Start inhibit due to OFF button
		0	Normal operation

State diagram

ABB Drives profile

To illustrate the operation of the state diagram, the following example (ABB DRV LIM implementation of the ABB Drives profile) uses the control word to start the drive:

- First, the requirements for using the CONTROL WORD must be met. See above.
- When the power is first connected, the state of the drive is not ready to switch on. See dotted lined path (▪▪▪) in the state diagram below.
- Use the CONTROL WORD to step through the state machine states until the OPERATING state is reached, meaning that the drive is running and follows the given reference. See the table below.

Step	CONTROL WORD **Value**	**Description**
1	CW = 0000 0000 0000 0110 bit 15 bit 0	This CW value changes the drive state to READY TO SWITCH ON.
2		Wait at least 100 ms before proceeding.
3	CW = 0000 0000 0000 0111	This CW value changes the drive state to READY TO OPERATE.
4	CW = 0000 0000 0000 1111	This CW value changes the drive state to OPERATION ENABLED. The drive starts, but will not accelerate.
5	CW = 0000 0000 0010 1111	This CW value releases the ramp function generator (RFG) output and changes the drive state to RFG: ACCELERATOR ENABLED.
6	CW = 0000 0000 0110 1111	This CW value releases the ramp function generator (RFG) output and changes the drive state to OPERATING. The drive accelerates to the given reference and follows the reference.

The state diagram below describes the start-stop function of CONTROL WORD (CW) and STATUS WORD (SW) bits for the ABB Drives profile.

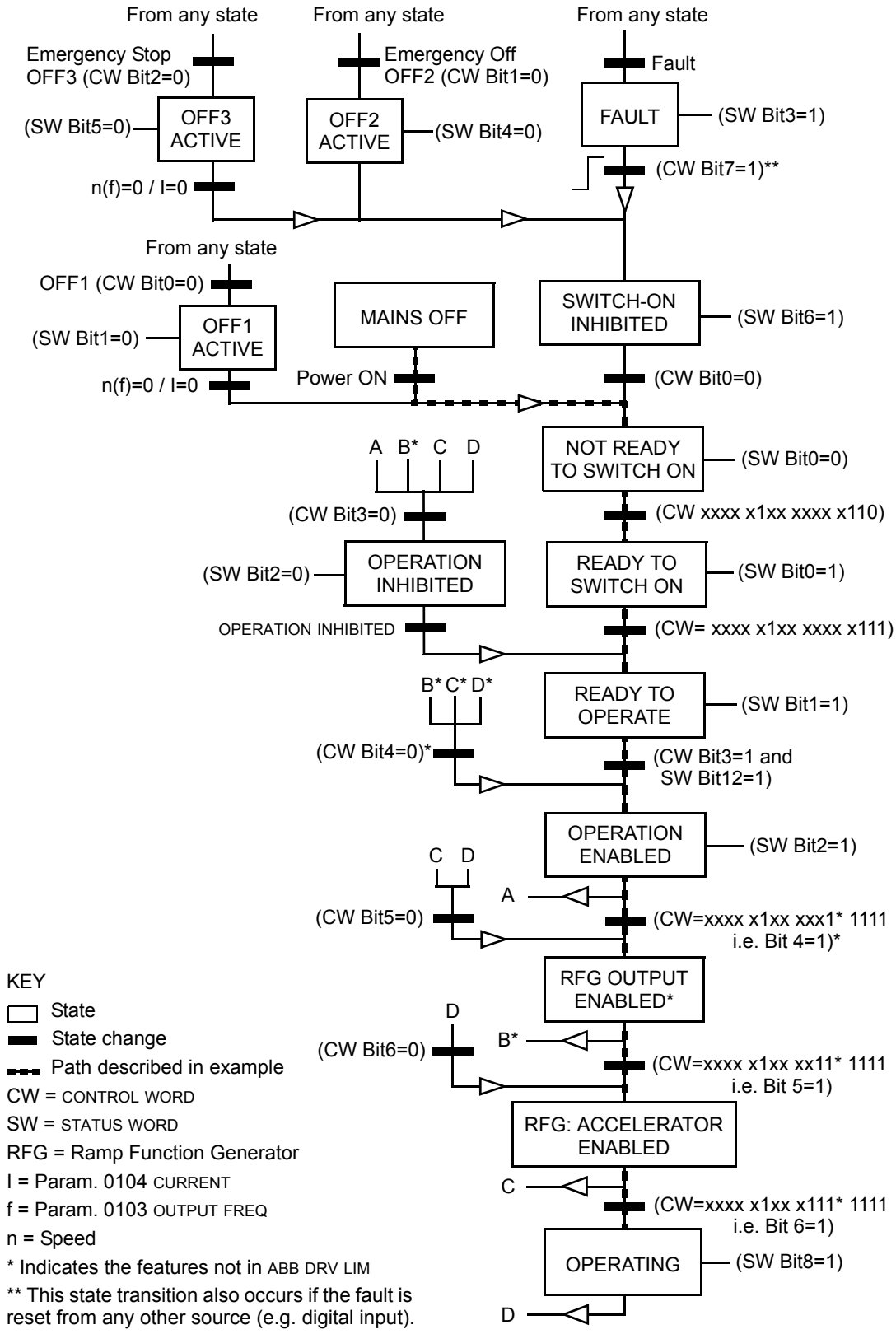

Reference scaling

ABB Drives and DCU profiles

The following table describes REFERENCE scaling for the ABB Drives and DCU profiles.

ABB Drives and DCU profiles				
Reference	**Range**	**Reference type**	**Scaling**	**Remarks**
REF1	-32767 … +32767	Speed or frequency	-20000 = -**(par. 1105)** 0 = 0 +20000 = **(par. 1105)** (20000 corresponds to 100%)	Final reference limited by 1104/1105. Actual motor speed limited by 2001/2002 (speed) or 2007/2008 (frequency).
REF2	-32767 … +32767	Speed or frequency	-10000 = -**(par. 1108)** 0 = 0 +10000 = **(par. 1108)** (10000 corresponds to 100%)	Final reference limited by 1107/1108. Actual motor speed limited by 2001/2002 (speed) or 2007/2008 (frequency).
		Torque	-10000 = -**(par. 1108)** 0 = 0 +10000 = **(par. 1108)** (10000 corresponds to 100%)	Final reference limited by 2015/2017 (torque1) or 2016/2018 (torque2).
		PID Reference	-10000 = -**(par. 1108)** 0 = 0 +10000 = **(par. 1108)** (10000 corresponds to 100%)	Final reference limited by 4012/4013 (PID set1) or 4112/4113 (PID set2).

Note: The setting of parameter 1104 REF1 MIN and 1107 REF2 MIN has no effect on the scaling of references.

When parameter 1103 REF1 SELECT or 1106 REF2 SELECT is set to COMM+AI1 or COMM*AI1, the reference is scaled as follows:

ABB Drives and DCU profiles		
Reference	**Value setting**	**AI reference scaling**
REF1	COMM+AI1	COMM (%) +(AI (%) - 0.5 · REF1 MAX (%)) 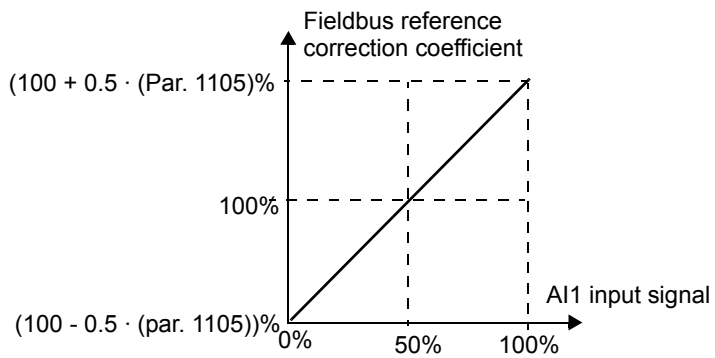

ABB Drives and DCU profiles		
Reference	**Value setting**	**AI reference scaling**
REF1	COMM*AI1	COMM (%) · (AI (%) / 0.5 · REF1 MAX (%)) 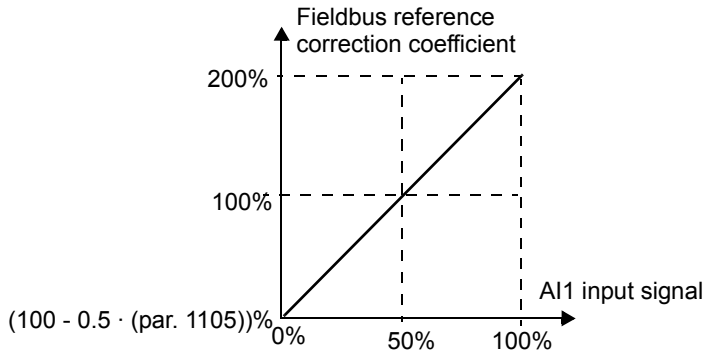
REF2	COMM+AI1	COMM (%) + (AI (%) - 0.5 · REF2 MAX (%)) 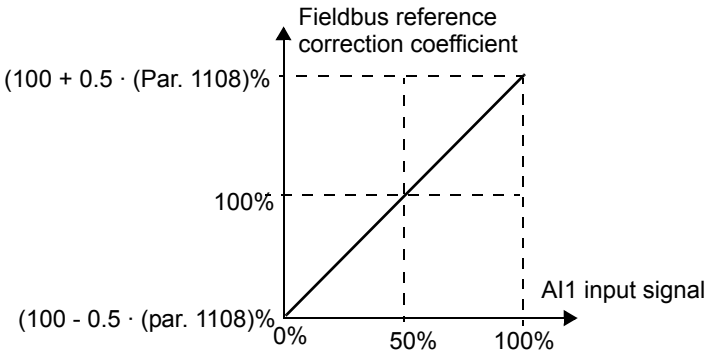
REF2	COMM*AI1	COMM (%) · (AI (%) / 0.5 · REF2 MAX (%)) 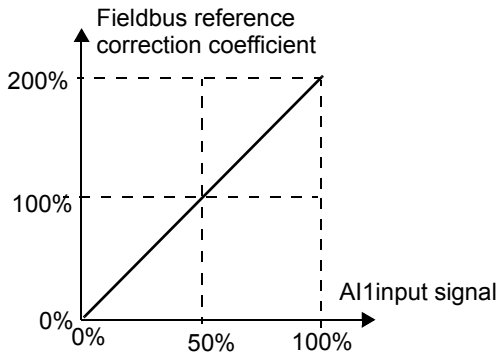

Reference handling

Use *Group 10: START/STOP/DIR* parameters to configure for control of rotation direction for each control location (EXT1 and EXT2). The following diagrams illustrate how group 10 parameters and the sign of the fieldbus reference interact to produce REFERENCE values (REF1 and REF2). Note, fieldbus references are bipolar, that is they can be positive or negative.

ABB Drives profile		
Parameter	**Value setting**	**AI reference scaling**
1003 DIRECTION	1 (FORWARD)	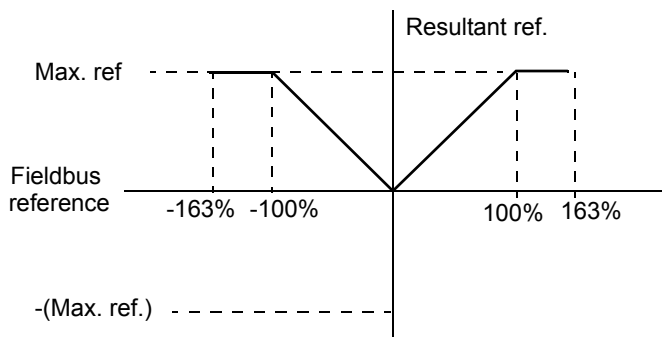
1003 DIRECTION	2 (REVERSE)	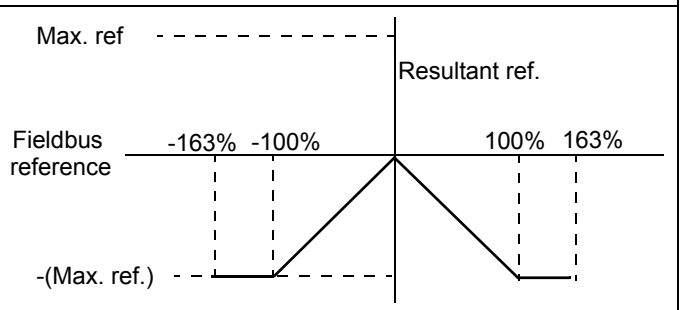
1003 DIRECTION	3 (REQUEST)	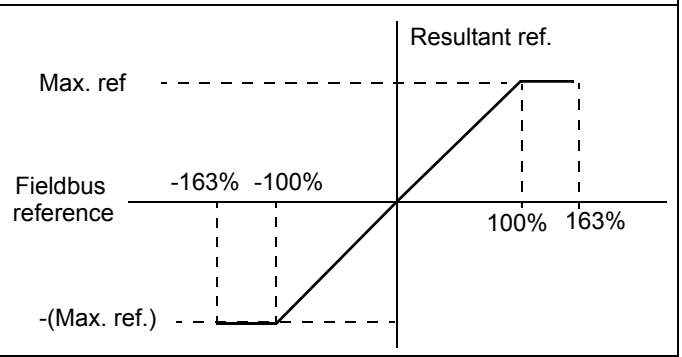

Fieldbus adapter

Overview

The ACS550 can be set up to accept control from an external system using standard serial communication protocols. When using serial communication, the ACS550 can either:

- receive all of its control information from the fieldbus, or
- be controlled from some combination of fieldbus control and other available control locations, such as digital or analog inputs and the control panel.

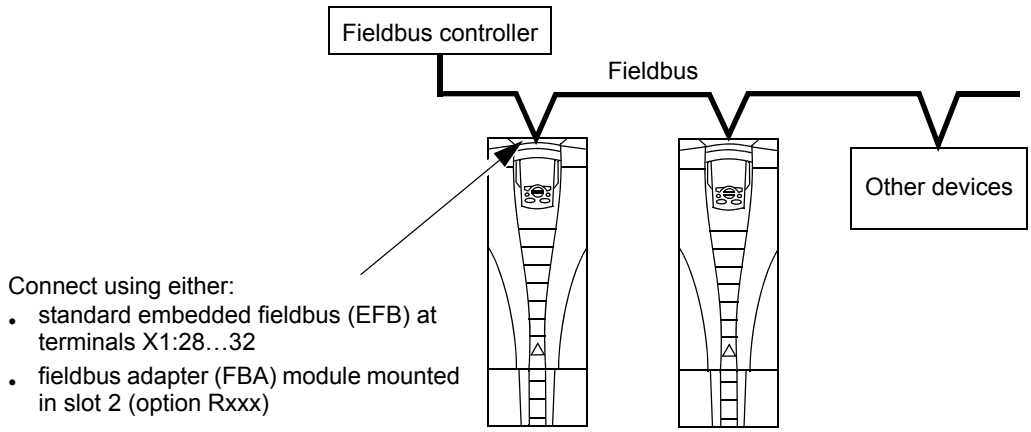

Two basic serial communications configurations are available:

- embedded fieldbus (EFB) – See chapter *Embedded fieldbus* on page *199*.
- fieldbus adapter (FBA) – With one of the optional FBA modules in the drive's expansion slot 2, the drive can communicate to a control system using one of the following protocols:
  - PROFIBUS DP
  - LONWORKS®
  - Ethernet (Modbus/TCP, EtherNet/IP™, EtherCAT, PROFINET IO, POWERLINK)
  - CANopen
  - DeviceNet™
  - ControlNet™
  - CC-Link.

The ACS550 detects automatically which communication protocol is used by the plug-in fieldbus adapter. The default settings for each protocol assume that the profile used is the protocol's industry-standard drive profile (e.g. PROFIdrive for PROFIBUS, AC/DC Drive for DeviceNet). All of the FBA protocols can also be configured for the ABB Drives profile.

Configuration details depend on the protocol and profile used.These details are provided in a user's manual supplied with the FBA module.

Details for the ABB Drives profile (which apply for all protocols) are provided in section *ABB Drives profile technical data* on page *242*.

Control interface

In general, the basic control interface between the fieldbus system and the drive consists of:

- Output Words:
  - CONTROL WORD
  - REFERENCE (speed or frequency)
  - Others: The drive supports a maximum of 15 output words. Protocols limits may further restrict the total.
- Input Words:
  - STATUS WORD
  - Actual Value (speed or frequency)
  - Others: The drive supports a maximum of 15 input words. Protocols limits may further restrict the total.

Note: The words "output" and "input" are used as seen from the fieldbus controller point of view. For example an output describes data flow from the fieldbus controller to the drive and appears as an input from the drive point of view.

The meanings of the controller interface words are not restricted by the ACS550. However, the profile used may set particular meanings.

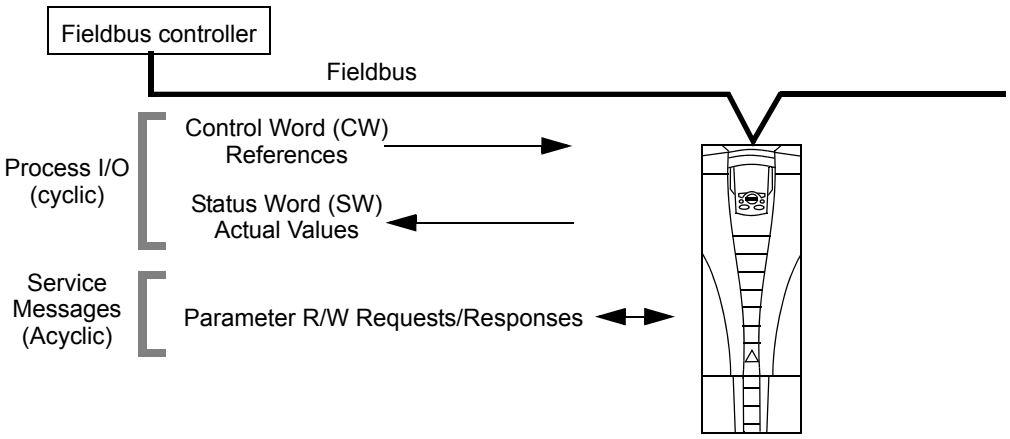

Control Word

The CONTROL WORD is the principal means for controlling the drive from a fieldbus system. The fieldbus controller sends the CONTROL WORD to the drive. The drive switches between states according to the bit-coded instructions in the CONTROL WORD. Using the CONTROL WORD requires that:

- The drive is in remote (REM) control.

- The serial communication channel is defined as the source for controlling commands from EXT1 (set using parameters 1001 EXT1 COMMANDS and 1102 EXT1/EXT2 SEL).
- The external plug-in fieldbus adapter is activated:
  - Parameter 9802 COMM PROT SEL = 4 (EXT FBA).
  - The external plug-in fieldbus adapter is configured to use the drive profile mode or drive profile objects.

The content of the CONTROL WORD depends on the protocol/profile used. See the user's manual provided with the FBA module and/or section *ABB Drives profile technical data* on page *242*.

Status Word

The STATUS WORD is a 16-bit word containing status information, sent by the drive to the fieldbus controller. The content of the STATUS WORD depends on the protocol/profile used. See the user's manual provided with the FBA module and/or section *ABB Drives profile technical data* on page *242*.

Reference

The contents of each REFERENCE word:

- can be used, as speed or frequency reference
- is a 16-bit word comprised of a sign bit and a 15-bit integer
- Negative references (indicating reversed rotation direction) are indicated by the two's complement of the corresponding positive reference value.

The use of a second reference (REF2) is supported only when a protocol is configured for the ABB Drives profile.

Reference scaling is fieldbus type specific. See the user's manual provided with the FBA module and/or the following sections as appropriate:

- *Reference scaling* on page *246* (*ABB Drives profile technical data*)
- *Reference scaling* on page *250* (*Generic profile technical data*).

Actual Values

Actual Values are 16-bit words containing information on selected operations of the drive. Drive Actual Values (for example, *Group 10: START/STOP/DIR* parameters) can be mapped to Input Words using *Group 51: EXT COMM MODULE* parameters (protocol-dependent, but typically parameters 5104…5126).

Planning

Network planning should address the following questions:

- What types and quantities of devices must be connected to the network?
- What control information must be sent down to the drives?
- What feedback information must be sent from the drives to the controlling system?

Mechanical and electrical installation – FBA

WARNING! Connections should be made only while the drive is disconnected from the power source.

Overview

The FBA (fieldbus adapter) is a plug-in module that fits in the drive's expansion slot 2. The module is held in place with plastic retaining clips and two screws. The screws also ground the shield for the module cable and connect the module GND signals to the drive control board.

On installation of the module, electrical connection to the drive is automatically established through the 34-pin connector.

Mounting procedure

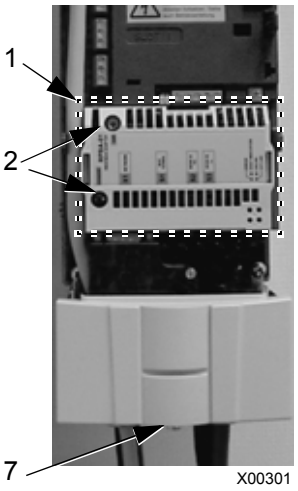

Note: Install the input power and motor cables first.

1. Insert the module carefully into the drive expansion slot 2 until the retaining clips lock the module into position.
2. Fasten the two screws (included) to the stand-offs.

Note: Correct installation of the screws is essential for fulfilling the EMC requirements and for proper operation of the module.

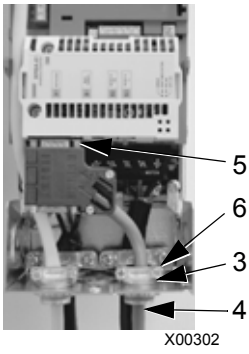

3. Open the appropriate knockout in the conduit box and install the cable clamp for the network cable.
4. Route the network cable through the cable clamp.
5. Connect the network cable to the module's network connector.
6. Tighten the cable clamp.
7. Install the conduit box cover (1 screw).
8. For configuration information see the following:
   - section *Communication set-up – FBA* on page *235*
   - section *Activate drive control functions – FBA* on page *235*
   - The protocol specific documentation provided with the module.

Communication set-up – FBA

Serial communication selection

To activate the serial communication, use parameter 9802 COMM PROT SEL. Set 9802 = 4 (EXT FBA).

Serial communication configuration

Setting 9802, together with mounting a particular FBA module, automatically sets the appropriate default values in parameters that define the communication process. These parameters and descriptions are defined in the user's manual supplied with the FBA module.

- Parameter 5101 is automatically configured.
- Parameters 5102…5126 are protocol-dependent and define, for example, the profile used and additional I/O words. These parameters are referred to as the fieldbus configuration parameters. See the user's manual provided with the FBA module for details on the fieldbus configuration parameters.
- Parameter 5127 forces the validation of changes to parameters 5102…5126. If parameter 5127 is not used, changes to parameters 5102…5126 take affect only after the drive power is cycled.
- Parameters 5128…5133 provide data about the FBA module currently installed (e.g. component versions and status).

See *Group 51: EXT COMM MODULE* for parameter descriptions.

Activate drive control functions – FBA

Fieldbus control of various drive functions requires configuration to:

- tell the drive to accept fieldbus control of the function
- define as a fieldbus input, any drive data required for control
- define as a fieldbus output, any control data required by the drive.

The following sections describe, at a general level, the configuration required for each control function. The last column in each table below is deliberately blank. See the user's manual supplied with the FBA module for the appropriate entry.

Start/Stop Direction control

Using the fieldbus for start/stop/direction control of the drive requires:

- drive parameter values set as defined below
- fieldbus controller supplied command(s) in the appropriate location. (The location is defined by the Protocol Reference, which is protocol dependent.)

Drive parameter		Value	Description	Protocol reference
1001	EXT1 COMMANDS	10 (COMM)	Start/Stop controlled by fieldbus with Ext1 selected.	

Drive parameter		Value	Description	Protocol reference
1002	EXT2 COMMANDS	10 (COMM)	Start/Stop by controlled fieldbus with Ext2 selected.	
1003	DIRECTION	3 (REQUEST)	Direction controlled by fieldbus.	

Input reference select

Using the fieldbus to provide input reference to the drive requires:

- drive parameter value set as defined below
- fieldbus controller supplied reference word(s) in the appropriate location. (The location is defined by the Protocol Reference, which is protocol dependent.)

Drive parameter		Value	Description	Protocol reference
1102	EXT1/EXT2 SEL	8 (COMM)	Ref. selected by fieldbus. (Required only if 2 references used.)	
1103	REF1 SELECT	8 (COMM) 9 (COMM+AI1) 10 (COMM*AI1)	Input reference 1supplied by fieldbus.	
1106	REF2 SELECT	8 (COMM) 9 (COMM+AI) 10 (COMM*AI)	Input reference 2 supplied by fieldbus. (Required only if 2 references used.)	

Note: Multiple references are supported only when using the ABB Drives profile.

Scaling

Where required, REFERENCES can be scaled. See the following sections, as appropriate:

- *Reference scaling* on page *246* (*ABB Drives profile technical data*)
- *Reference scaling* on page *250* (*Generic profile technical data*).

System control

Using the fieldbus for miscellaneous drive control requires:

- drive parameter values set as defined below
- fieldbus controller command(s) in the appropriate location. (The location is defined by the Protocol Reference, which is protocol dependent.)

Drive parameter		Value	Description	Protocol reference
1601	RUN ENABLE	7 (COMM)	Run enable by fieldbus.	
1604	FAULT RESET SEL	8 (COMM)	Fault reset by fieldbus.	
1607	PARAM SAVE	1 (SAVE)	Saves altered parameters to memory (then value returns to 0).	

Relay output control

Using the fieldbus for relay output control requires:

- drive parameter values set as defined below
- fieldbus controller supplied, binary coded, relay command(s) in the appropriate location. (The location is defined by the Protocol Reference, which is protocol dependent.)

Drive parameter		Value	Description	Protocol reference
1401	RELAY OUTPUT 1	35 (COMM) 36 (COMM(-1))	Relay Output 1 controlled by fieldbus.	
1402	RELAY OUTPUT 2		Relay Output 2 controlled by fieldbus.	
1403	RELAY OUTPUT 3		Relay Output 3 controlled by fieldbus.	
1410[1]	RELAY OUTPUT 4		Relay Output 4 controlled by fieldbus.	
1411[1]	RELAY OUTPUT 5		Relay Output 5 controlled by fieldbus.	
1412[1]	RELAY OUTPUT 6		Relay Output 6 controlled by fieldbus.	

[1] More than 3 relays requires the addition of a relay extension module.

Note: Relay status feedback occurs without configuration as defined below.

Drive parameter		Value	Protocol reference
0122	RO 1-3 STATUS	Relay 1…3 status.	
0123	RO 4-6 STATUS	Relay 4…6 status.	

Analog output control

Using the fieldbus for analog output control (e.g. PID setpoint) requires:

- drive parameter values set as defined below
- fieldbus controller supplied analog value(s) in the appropriate location. (The location is defined by the Protocol Reference, which is protocol dependent.)

Drive parameter		Value	Description	Protocol reference
1501	AO1 CONTENT SEL	135 (COMM VALUE 1)	Analog Output 1 controlled by writing to parameter 0135.	–
0135	COMM VALUE 1	–		
1502 … 1505	AO1 CONTENT MIN … MAXIMUM AO1	Set appropriate values.	Used for scaling	–
1506	FILTER AO1		Filter time constant for AO1.	–
1507	AO2 CONTENT SEL	136 (COMM VALUE 2)	Analog Output 2 controlled by writing to parameter 0136.	–
0136	COMM VALUE 2	–		
1508 … 1511	AO2 CONTENT MIN … MAXIMUM AO2	Set appropriate values.	Used for scaling	–
1512	FILTER AO2		Filter time constant for AO2.	–

PID Control setpoint source

Using the following settings to select the fieldbus as the setpoint source for PID loops:

Drive parameter		Value	Setting	Protocol reference
4010	SET POINT SEL (Set 1)	8 (COMM VALUE 1) 9 (COMM+AI1) 10 (COMM*AI1)	Setpoint is input reference 2 (+/-/* AI1)	
4110	SET POINT SEL (Set 2)			
4210	SET POINT SEL (Ext/Trim)			

Communication fault

When using fieldbus control, specify the drive's action if serial communication is lost.

Drive parameter		Value	Description
3018	COMM FAULT FUNC	0 (NOT SEL) 1 (FAULT) 2 (CONST SP7) 3 (LAST SPEED)	Set for appropriate drive response.
3019	COMM FAULT TIME	Set time delay before acting on a communication loss.	

Feedback from the drive – FBA

Inputs to the controller (drive outputs) have pre-defined meanings established by the protocol. This feedback does not require drive configuration. The following table lists a sample of feedback data. For a complete listing, see all parameters listed in section *Complete parameter descriptions* on page *102*.

Drive parameter		Protocol reference
0102	SPEED	
0103	OUTPUT FREQ	
0104	CURRENT	
0105	TORQUE	
0106	POWER	
0107	DC BUS VOLTAGE	
0109	OUTPUT VOLTAGE	
0301	FB CMD WORD 1 – bit 0 (STOP)	
0301	FB CMD WORD 1 – bit 2 (REV)	
0118	DI 1-3 STATUS – bit 0 (DI3)	

Scaling

To scale the drive parameter values see the following sections, as appropriate:

- *Actual Value scaling* on page *249* (*ABB Drives profile technical data*)
- *Actual Value scaling* on page *251* (*Generic profile technical data*).

Diagnostics – FBA

Fault handling

The ACS550 provides fault information as follows:

- The control panel display shows a fault code and text. See chapter *Diagnostics* on page *253* for a complete description.
- Parameters 0401 LAST FAULT, 0412 PREVIOUS FAULT1 and 0413 PREVIOUS FAULT2 store the most recent faults.
- For fieldbus access, the drive reports faults as a hexadecimal value, assigned and coded according to the DRIVECOM specification. See the table below. Not all profiles support requesting fault codes using this specification. For profiles that support this specification, the profile documentation defines the proper fault request process.

Drive fault code		Fieldbus fault code (DRIVECOM specification)
1	OVERCURRENT	2310h
2	DC OVERVOLT	3210h
3	DEV OVERTEMP	4210h
4	SHORT CIRC	2340h
5	Reserved	FF6Bh
6	DC UNDERVOLT	3220h
7	AI1 LOSS	8110h
8	AI2 LOSS	8110h
9	MOT OVERTEMP	4310h
10	PANEL LOSS	5300h
11	ID RUN FAIL	FF84h
12	MOTOR STALL	7121h
14	EXT FAULT 1	9000h
15	EXT FAULT 2	9001h
16	EARTH FAULT	2330h
17	Obsolete	FF6Ah
18	THERM FAIL	5210h
19	OPEX LINK	7500h
20	OPEX PWR	5414h
21	CURR MEAS	2211h
22	SUPPLY PHASE	3130h
23	ENCODER ERR	7301h
24	OVERSPEED	7310h
25	Reserved	FF80h
26	DRIVE ID	5400h

Drive fault code		Fieldbus fault code (DRIVECOM specification)
27	CONFIG FILE	630Fh
28	SERIAL 1 ERR	7510h
29	EFB CON FILE	6306h
30	FORCE TRIP	FF90h
31	EFB 1	FF92h
32	EFB 2	FF93h
33	EFB 3	FF94h
34	MOTOR PHASE	FF56h
35	OUTP WIRING	FF95h
36	INCOMPATIBLE SW	630Fh
37	CB OVERTEMP	4110h
38	USER LOAD CURVE	FF6Bh
101	SERF CORRUPT	FF55h
102	Reserved	FF55h
103	SERF MACRO	FF55h
104	Reserved	FF55h
105	Reserved	FF55h
201	DSP T1 OVERLOAD	6100h
202	DSP T2 OVERLOAD	6100h
203	DSP T3 OVERLOAD	6100h
204	DSP STACK ERROR	6100h
205	Reserved (obsolete)	5000h
206	CB ID ERROR	5000h
207	EFB LOAD ERROR	6100h
1000	PAR HZRPM	6320h
1001	PAR PFC REF NEG	6320h
1002	Reserved (obsolete)	6320h
1003	PAR AI SCALE	6320h
1004	PAR AO SCALE	6320h
1005	PAR PCU 2	6320h
1006	PAR EXT RO	6320h
1007	PAR FIELDBUS MISSING	6320h
1008	PAR PFC MODE	6320h
1009	PAR PCU 1	6320h
1012	PAR PFC IO 1	6320h
1013	PAR PFC IO 2	6320h
1014	PAR PFC IO 3	6320h
1016	PAR USER LOAD C	6320h

Serial communication diagnostics

Besides the drive fault codes, the FBA module has diagnostic tools. Refer to the user's manual supplied with the FBA module.

ABB Drives profile technical data

Overview

The ABB Drives profile provides a standard profile that can be used on multiple protocols, including protocols available on the FBA module. This section describes the ABB Drives profile implemented for FBA modules.

Control Word

As described earlier in section *Control interface* on page *232*, the CONTROL WORD is the principal means for controlling the drive from a fieldbus system.

The following table and the state diagram later in this sub-section describe the CONTROL WORD content for the ABB Drives profile.

ABB Drives profile (FBA) CONTROL WORD				
Bit	**Name**	**Value**	**Commanded state**	**Comments**
0	OFF1 CONTROL	1	READY TO OPERATE	Enter READY TO OPERATE
		0	EMERGENCY OFF	Drive ramps to stop according to currently active deceleration ramp (2203 or 2205) Normal command sequence: • Enter OFF1 ACTIVE • Proceed to READY TO SWITCH ON, unless other interlocks (OFF2, OFF3) are active.
1	OFF2 CONTROL	1	OPERATING	Continue operation (OFF2 inactive)
		0	EMERGENCY OFF	Drive coasts to stop. Normal command sequence: • Enter OFF2 ACTIVE • Proceed to SWITCHON INHIBITED
2	OFF3 CONTROL	1	OPERATING	Continue operation (OFF3 inactive)
		0	EMERGENCY STOP	Drive stops within in time specified by parameter 2208. Normal command sequence: • Enter OFF3 ACTIVE • Proceed to SWITCH ON INHIBITED **WARNING!** Be sure motor and driven equipment can be stopped using this mode.
3	INHIBIT OPERATION	1	OPERATION ENABLED	Enter OPERATION ENABLED (Note the Run enable signal must be active. See 1601. If 1601 is set to COMM, this bit also actives the Run Enable signal.)
		0	OPERATION INHIBITED	Inhibit operation. Enter OPERATION INHIBITED
4	RAMP_OUT_ ZERO	1	NORMAL OPERATION	Enter RAMP FUNCTION GENERATOR: ACCELERATION ENABLED
		0	RFG OUT ZERO	Force ramp function generator output to Zero. Drive ramps to stop (current and DC voltage limits in force).

ABB Drives profile (FBA) CONTROL WORD				
Bit	**Name**	**Value**	**Commanded state**	**Comments**
5	RAMP_HOLD	1	RFG OUT ENABLED	Enable ramp function. Enter RAMP FUNCTION GENERATOR: ACCELERATOR ENABLED
		0	RFG OUT HOLD	Halt ramping (Ramp Function Generator output held)
6	RAMP_IN_ ZERO	1	RFG INPUT ENABLED	Normal operation. Enter OPERATING
		0	RFG INPUT ZERO	Force Ramp Function Generator input to zero.
7	RESET	0=>1	RESET	Fault reset if an active fault exists (Enter SWITCH-ON INHIBITED). Effective if 1604 = COMM.
		0	OPERATING	Continue normal operation
8…9	Unused			
10	REMOTE_CMD	1		Fieldbus control enabled
		0		• CW ≠ 0 or Ref ≠ 0: Retain last CW and Ref. • CW = 0 and Ref = 0: Fieldbus control enabled. • Ref and deceleration/acceleration ramp are locked.
11	EXT CTRL LOC	1	EXT2 SELECT	Select external control location 2 (EXT2). Effective if 1102 = COMM.
		0	EXT1 SELECT	Select external control location 1 (EXT1). Effective if 1102 = COMM.
12…15	Unused			

Status Word

As described earlier in section *Control interface* on page *232*, the contents of the STATUS WORD is status information, sent by the drive to the master station. The following table and the state diagram later in this sub-section describe the status word content.

ABB Drives profile (FBA) STATUS WORD			
Bit	**Name**	**Value**	**Description (Correspond to states/boxes in the state diagram)**
0	RDY_ON	1	READY TO SWITCH ON
		0	NOT READY TO SWITCH ON
1	RDY_RUN	1	READY TO OPERATE
		0	OFF1 ACTIVE
2	RDY_REF	1	OPERATION ENABLED
		0	OPERATION INHIBITED
3	TRIPPED	0…1	FAULT
		0	No fault

ABB Drives profile (FBA) STATUS WORD			
Bit	**Name**	**Value**	**Description (Correspond to states/boxes in the state diagram)**
4	OFF_2_STA	1	OFF2 inactive
		0	**OFF2 ACTIVE**
5	OFF_3_STA	1	OFF3 inactive
		0	**OFF3 ACTIVE**
6	SWC_ON_INHIB	1	SWITCH-ON INHIBIT ACTIVE
		0	SWITCH-ON INHIBIT NOT ACTIVE
7	ALARM	1	Alarm (See section *Alarm listing* on page *261* for details on alarms.)
		0	No alarm
8	AT_SETPOINT	1	OPERATING**.** Actual value equals (within tolerance limits) the reference value.
		0	Actual value is outside tolerance limits (not equal to reference value).
9	REMOTE	1	Drive control location: REMOTE (EXT1 or EXT2)
		0	Drive control location: LOCAL
10	ABOVE_LIMIT	1	Supervised parameter's value ≥ supervision high limit. Bit remains "1" until supervised parameter's value < supervision low limit. See *Group 32: SUPERVISION*.
		0	Supervised parameter's value < supervision low limit. Bit remains "0" until supervised parameter's value > supervision high limit. See *Group 32: SUPERVISION*.
11	EXT CTRL LOC	1	External control location 2 (EXT2) selected
		0	External control location 1 (EXT1) selected
12	EXT RUN ENABLE	1	External Run Enable signal received
		0	No External Run Enable signal received
13… 15	Unused		

The state diagram below describes the start-stop function of CONTROL WORD (CW) and STATUS WORD (SW) bits.

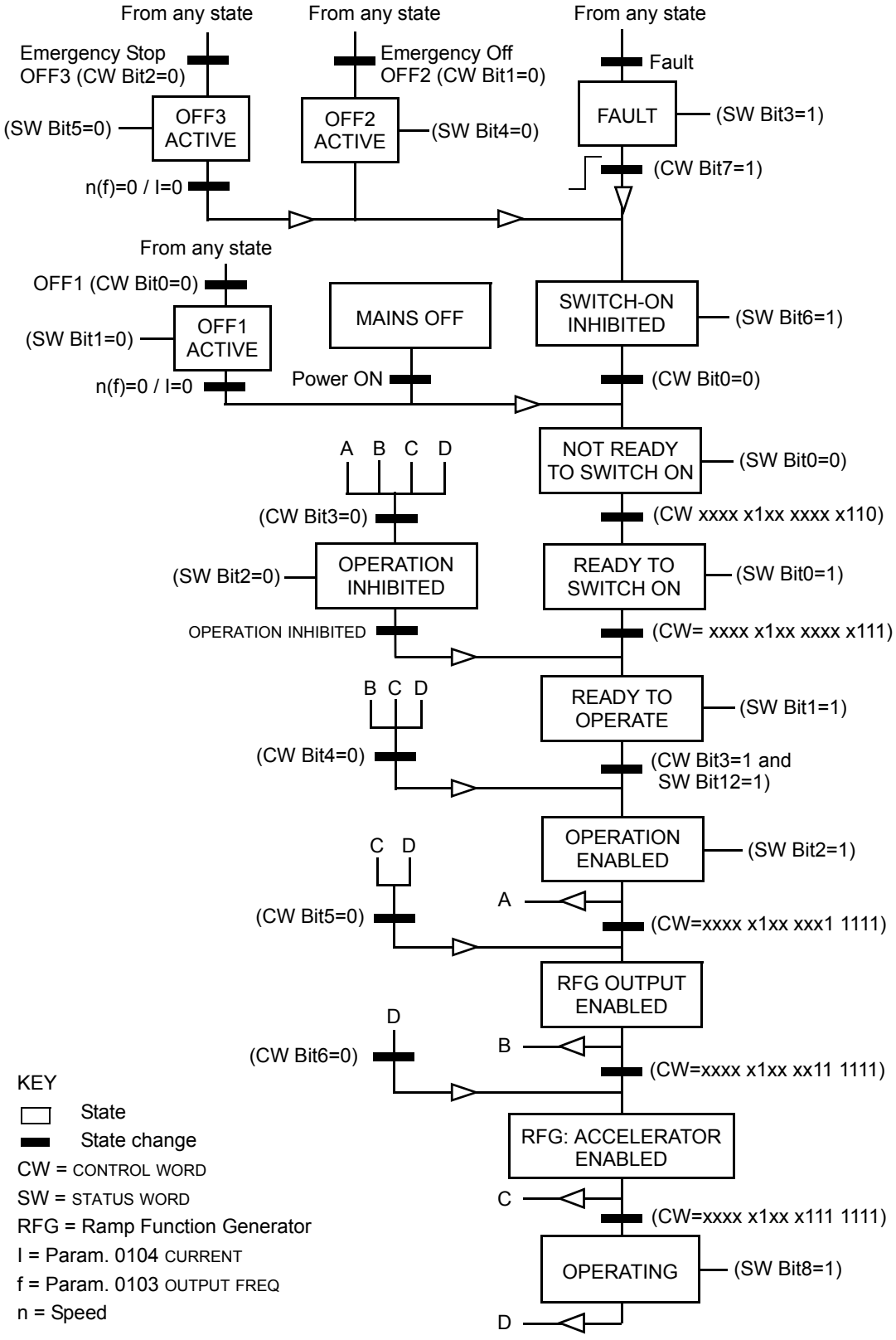

Reference

As described earlier in section *Control interface* on page *232*, the REFERENCE word is a speed or frequency reference.

Reference scaling

The following table describes REFERENCE scaling for the ABB Drives profile.

ABB Drives Profile (FBA)				
Reference	**Range**	**Reference type**	**Scaling**	**Remarks**
REF1	-32767… +32767	Speed or frequency	-20000 = -**(par. 1105)** 0 = 0 +20000 = **(par. 1105)** (20000 corresponds to 100%)	Final reference limited by 1104/1105. Actual motor speed limited by 2001/2002 (speed) or 2007/2008 (frequency).
REF2	-32767… +32767	Speed or frequency	-10000 = -**(par. 1108)** 0 = 0 +10000 = **(par. 1108)** (10000 corresponds to 100%)	Final reference limited by 1107/1108. Actual motor speed limited by 2001/2002 (speed) or 2007/2008 (frequency).
		Torque	-10000 = -**(par. 1108)** 0 = 0 +10000 = **(par. 1108)** (10000 corresponds to 100%)	Final reference limited by 2015/2017 (torque1) or 2016/2018 (torque2).
		PID Reference	-10000 = -**(par. 1108)** 0 = 0 +10000 = **(par. 1108)** (10000 corresponds to 100%)	Final reference limited by 4012/4013 (PID set1) or 4112/4113 (PID set2).

Note: The setting of parameter 1104 REF1 MIN and 1107 REF2 MIN has no effect on the scaling of references.

When parameter 1103 REF1 SELECT or 1106 REF2 SELECT is set to COMM+AI1 or COMM*AI1, the reference is scaled as follows:

ABB Drives profile (FBA)		
Reference	**Value setting**	**AI reference scaling**
REF1	COMM+AI1	COMM (%) + (AI (%) - 0.5 · REF1 MAX (%)) 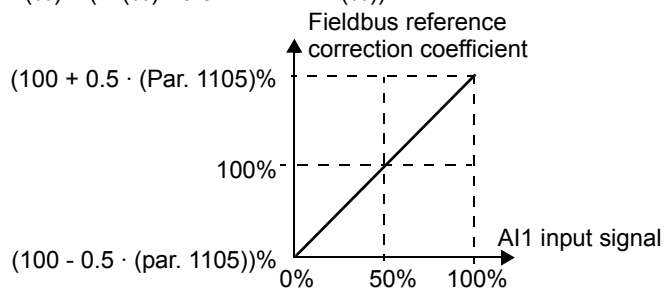

ABB Drives profile (FBA)		
Reference	**Value setting**	**AI reference scaling**
REF1	COMM*AI1	COMM (%) · (AI (%) / 0.5 · REF1 MAX (%)) 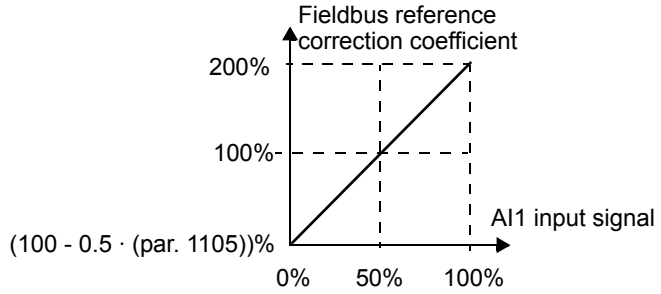
REF2	COMM+AI1	COMM (%) + (AI (%) - 0.5 · REF2 MAX (%)) 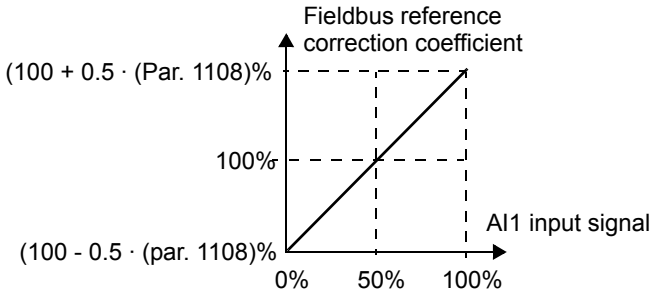
REF2	COMM*AI1	COMM (%) · (AI (%) / 0.5 · REF2 MAX (%)) 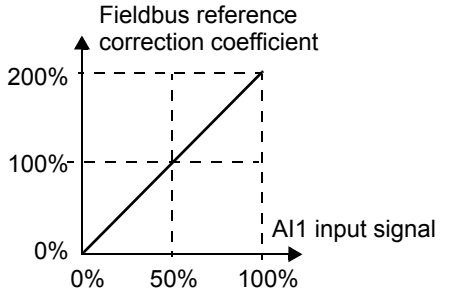

Reference handling

Use *Group 10: START/STOP/DIR* parameters to configure for control of rotation direction for each control location (EXT1 and EXT2). The following diagrams illustrate how group 10 parameters and the sign of the fieldbus reference interact to produce REFERENCE values (REF1 and REF2). Note, fieldbus references are bipolar, that is they can be positive or negative.

ABB Drives profile		
Parameter	**Value setting**	**AI reference scaling**
1003 DIRECTION	1 (FORWARD)	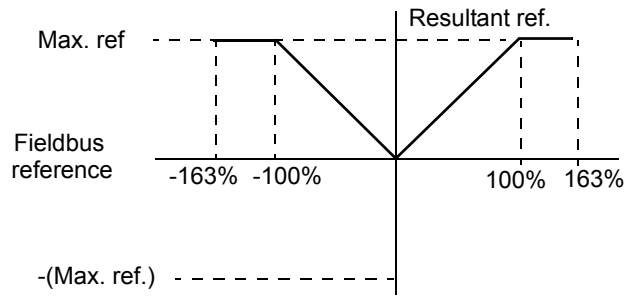
1003 DIRECTION	2 (REVERSE)	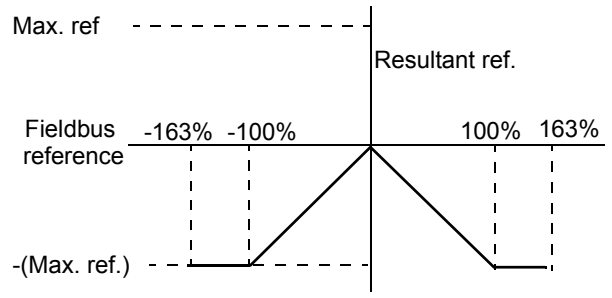
1003 DIRECTION	3 (REQUEST)	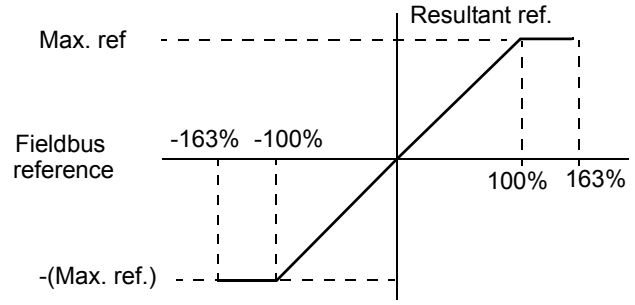

Actual Value

As described earlier in section *Control interface* on page *232*, Actual Values are words containing drive values.

Actual Value scaling

The scaling of the integers sent to the fieldbus as Actual Values depends on the resolution of the selected drive parameter. Except as noted for ACT1 and ACT2 below, scale the feedback integer using the resolution listed for the parameter in section *Complete parameter list* on page *87*. For example:

Feedback integer	Parameter resolution	Scaled Value
1	0.1 mA	1 · 0.1 mA = 0.1 mA
10	0.1%	10 · 0.1% = 1%

Data words 5 and 6 are scaled as follows:

ABB Drives profile		
	Contents	**Scaling**
ACT1	ACTUAL SPEED	-20000 … +20000 = -(par. 1105) … +(par. 1105)
ACT2	TORQUE	-10000 … +10000 = -100% … +100%

Virtual addresses of the drive control

The virtual address area of the drive control is allocated as follows:

1	Control Word
2	Reference 1 (REF1)
3	Reference 2 (REF2)
4	Status Word
5	Actual Value 1 (ACT1)
6	Actual Value 2 (ACT2)

Generic profile technical data

Overview

The generic profile aims to fulfill the industry-standard drive profile for each protocol (e.g. PROFIdrive for PROFIBUS, AC/DC Drive for DeviceNet).

Control Word

As described earlier in section *Control interface* on page *232*, the CONTROL WORD is the principal means for controlling the drive from a fieldbus system. For specific CONTROL WORD content, see the user's manual provided with the FBA module.

Status Word

As described earlier in section *Control interface* on page *232*, the contents of the STATUS WORD is status information, sent by the drive to the master station. For specific STATUS WORD content, see the user's manual provided with the FBA module.

Reference

As described earlier in section *Control interface* on page *232*, the REFERENCE word is a speed or frequency reference.

Note: REF2 is not supported by the Generic Drive profiles.

Reference scaling

REFERENCE scaling is fieldbus type specific. However, at the drive, the meaning of a 100% REFERENCE value is fixed as described in the table below. For a detailed description on the range and scaling of the REFERENCE, see the user's manual supplied with the FBA module.

Generic profile				
Reference	**Range**	**Reference type**	**Scaling**	**Remarks**
REF	Fieldbus specific	Speed	-100% = -**(par. 9908)** 0 = 0 +100 = **(par. 9908)**	Final reference limited by 1104/1105. Actual motor speed limited by 2001/2002 (speed).
		Frequency	-100% = -**(par. 9907)** 0 = 0 +100 = **(par. 9907)**	Final reference limited by 1104/1105. Actual motor speed limited by 2007/2008 (frequency).

Actual Values

As described earlier in section *Control interface* on page *232*, Actual Values are words containing drive values.

Actual Value scaling

For Actual Values, scale the feedback integer using the parameter's resolution. (See section *Complete parameter list* on page *87* for parameter resolutions.) For example:

Feedback integer	Parameter resolution	(Feedback integer) · (Parameter resolution) = Scaled Value
1	0.1 mA	1 · 0.1 mA = 0.1 mA
10	0.1%	10 · 0.1% = 1%

Where parameters are in percent, the *Complete parameter list* section specifies what parameter corresponds to 100%. In such cases, to convert from percent to engineering units, multiply by the value of the parameter that defines 100% and divide by 100%. For example:

Feedback integer	Parameter resolution	Value of the parameter that defines 100%	(Feedback integer) · (Parameter resolution) · (Value of 100% ref.) / 100% = Scaled Value
10	0.1%	1500 rpm[1]	10 · 0.1% · 1500 RPM / 100% = 15 rpm
100	0.1%	500 Hz[2]	100 · 0.1% · 500 Hz / 100% = 50 Hz

[1] Assuming, for the sake of this example, that the Actual Value uses parameter 9908 MOT NOM SPEED as the 100% reference and that 9908 = 1500 rpm.

[2] Assuming, for the sake of this example, that the Actual Value uses parameter 9907 MOT NOM FREQ as the 100% reference and that 9907 = 500 Hz.

Actual Value mapping

See the user's manual supplied with the FBA module.

Diagnostics

WARNING! Do not attempt any measurement, parts replacement or other service procedure not described in this manual. Such action will void the warranty, may endanger correct operation and increase downtime and expense.

WARNING! All electrical installation and maintenance work described in this chapter should only be undertaken by qualified service personnel. The safety instructions in chapter *Safety* on page *5* must be followed.

Diagnostic displays

The drive detects error situations and reports them using:

- the green and red LED on the body of the drive
- the status LED on the control panel (if an Assistant Control Panel is attached to the drive)
- the control panel display (if a control panel is attached to the drive)
- the Fault Word and Alarm Word parameter bits (parameters 0305 to 0309). See *Group 03: FB ACTUAL SIGNALS* on page *108* for the bit definitions.

The form of the display depends on the severity of the error. You can specify the severity for many errors by directing the drive to:

- ignore the error situation
- report the situation as an alarm
- report the situation as a fault.

Red – Faults

The drive signals that it has detected a severe error, or fault, by:

- enabling the red LED on the drive (LED is either steady on or blinking)
- showing the steady red status LED on the control panel (if attached to the drive)
- setting an appropriate bit in a Fault Word parameter (0305 to 0307)
- overriding the control panel display with the display of a fault code in the Fault mode (figures on the right)
- stopping the motor (if it was on).

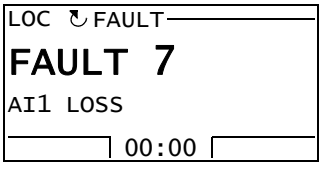

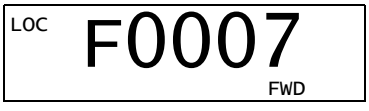

The fault code on the control panel display is temporary. Pressing any of the following keys removes the fault message: MENU, ENTER, UP, or DOWN key.

The message reappears after a few seconds if the control panel is not touched and the fault is still active.

Flashing green – Alarms

For less severe errors, called alarms, the diagnostic display is advisory. For these situations, the drive is simply reporting that it had detected something "unusual." In these situations, the drive:

- flashes the green LED on the drive (does not apply to alarms that arise from control panel operation errors)
- flashes the green LED on the control panel (if attached to the drive)
- sets an appropriate bit in an Alarm Word parameter (0308 or 0309). See *Group 03: FB ACTUAL SIGNALS* on page *108* for the bit definitions
- overrides the control panel display with the display of an alarm code and/or name in the Fault mode (figures on the right).

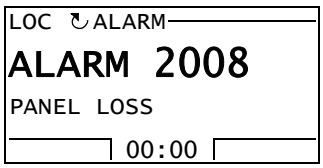

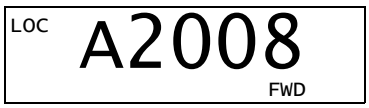

Alarm messages disappear from the control panel display after a few seconds. The message returns periodically as long as the alarm condition exists.

Correcting faults

The recommended corrective action for faults is:

- Use the table in section *Fault listing* below to find and address the root cause of the problem.
- Reset the drive. See section *Fault resetting* on page *259*.

Fault listing

The following table lists the faults by code number and describes each. The fault name is the long form shown in the Fault mode of the Assistant Control Panel when the fault occurs. The fault names shown (for Assistant Control Panel only) in the Fault Logger mode (see page *57*) and the fault names for parameter 0401 LAST FAULT may be shorter.

Fault code	Fault name in panel	Description and recommended corrective action
1	OVERCURRENT	Output current is excessive. Check for and correct: • Excessive motor load. • Insufficient acceleration time (parameters 2202 ACCELER TIME 1 and 2205 ACCELER TIME 2). • Faulty motor, motor cables or connections.

Fault code	Fault name in panel	Description and recommended corrective action
2	DC OVERVOLT	Intermediate circuit DC voltage is excessive. Check for and correct: • Static or transient overvoltages in the input power supply. • Insufficient deceleration time (parameters 2203 DECELER TIME 1 and 2206 DECELER TIME 2). • Undersized brake chopper (if present). • Verify that overvoltage controller is ON (using parameter 2005).
3	DEV OVERTEMP	Drive heatsink is overheated. Temperature is at or above limit. R1…R4: 115 °C (239 °F) R5, R6: 125 °C (257 °F) Check for and correct: • Fan failure. • Obstructions in the air flow. • Dirt or dust coating on the heat sink. • Excessive ambient temperature. • Excessive motor load.
4	SHORT CIRC	Fault current. Check for and correct: • A short-circuit in the motor cable(s) or motor. • Supply disturbances.
5	RESERVED	Not used.
6	DC UNDERVOLT	Intermediate circuit DC voltage is not sufficient. Check for and correct: • Missing phase in the input power supply. • Blown fuse. • Undervoltage on mains.
7	AI1 LOSS	Analog input 1 loss. Analog input value is less than AI1 FAULT LIMIT (3021). Check for and correct: • Source and connection for analog input. • Parameter settings for AI1 FAULT LIMIT (3021) and 3001 AI<MIN FUNCTION.
8	AI2 LOSS	Analog input 2 loss. Analog input value is less than AI2 FAULT LIMIT (3022). Check for and correct: • Source and connection for analog input. • Parameter settings for AI2 FAULT LIMIT (3022) and 3001 AI<MIN FUNCTION.
9	MOT OVERTEMP	Motor is too hot, based on either the drive's estimate or on temperature feedback. • Check for overloaded motor. • Adjust the parameters used for the estimate (3005…3009). • Check the temperature sensors and *Group 35: MOTOR TEMP MEAS* parameters.
10	PANEL LOSS	Panel communication is lost and either: • Drive is in local control mode (the control panel displays LOC), or • Drive is in remote control mode (REM) and is parameterized to accept start/stop, direction or reference from the control panel. To correct check: • Communication lines and connections. • Parameter 3002 PANEL COMM ERR. • Parameters in *Group 10: START/STOP/DIR* and *Group 11: REFERENCE SELECT* (if drive operation is REM).

Fault code	Fault name in panel	Description and recommended corrective action
11	ID RUN FAIL	The Motor ID Run was not completed successfully. Check for and correct: • Motor connections. • Motor parameters 9905…9909.
12	MOTOR STALL	Motor or process stall. Motor is operating in the stall region. Check for and correct: • Excessive load. • Insufficient motor power. • Parameters 3010…3012.
13	RESERVED	Not used.
14	EXT FAULT 1	Digital input defined to report first external fault is active. See parameter 3003 EXTERNAL FAULT 1.
15	EXT FAULT 2	Digital input defined to report second external fault is active. See parameter 3004 EXTERNAL FAULT 2.
16	EARTH FAULT	Possible ground fault detected in the motor or motor cables. The drive monitors for ground faults while the drive is running and while the drive is not running. Detection is more sensitive when the drive is not running and can produce false positives. Possible corrections: • Check for/correct faults in the input wiring. • Verify that motor cable does not exceed maximum specified length. • A delta grounded input power supply and motor cables with high capacitance may result in erroneous error reports during non-running tests. To disable response to fault monitoring when the drive is not running, use parameter 3023 WIRING FAULT. To disable response to all ground fault monitoring, use parameter 3017 EARTH FAULT. **Note:** Disabling earth fault (ground fault) may void the warranty.
17	OBSOLETE	Not used.
18	THERM FAIL	Internal fault. The thermistor measuring the internal temperature of the drive is open or shorted. Contact your local ABB representative.
19	OPEX LINK	Internal fault. A communication-related problem has been detected on the fiber optic link between the control and OINT boards. Contact your local ABB representative.
20	OPEX PWR	Internal fault. Exceptionally low voltage detected on the OINT power supply. Contact your local ABB representative.
21	CURR MEAS	Internal fault. Current measurement is out of range. Contact your local ABB representative.
22	SUPPLY PHASE	Ripple voltage in the DC link is too high. Check for and correct: • Missing mains phase. • Blown fuse.

Fault code	Fault name in panel	Description and recommended corrective action
23	ENCODER ERR	The drive is not detecting a valid encoder signal. Check for and correct: • Encoder presence and proper connection (reverse wired = channel A connected to terminal of channel B or vice versa, loose connection or short circuit). • Voltage logic levels are outside of the specified range. • A working and properly connected Pulse Encoder Interface Module, OTAC-01. • Wrong value entered in parameter 5001 PULSE NR. A wrong value will only be detected if the error is such that the calculated slip is greater than 4 times the rated slip of the motor. • Encoder is not being used, but parameter 5002 ENCODER ENABLE = 1 (ENABLE).
24	OVERSPEED	Motor speed is greater than 120% of the larger (in magnitude) of 2001 MINIMUM SPEED or 2002 MAXIMUM SPEED. Check for and correct: • Parameter settings for 2001 and 2002. • Adequacy of motor braking torque. • Applicability of torque control. • Brake chopper and resistor.
25	RESERVED	Not used.
26	DRIVE ID	Internal fault. Configuration Block Drive ID is not valid. Contact your local ABB representative.
27	CONFIG FILE	Internal configuration file has an error. Contact your local ABB representative.
28	SERIAL 1 ERR	Fieldbus communication has timed out. Check for and correct: • Fault setup (3018 COMM FAULT FUNC and 3019 COMM FAULT TIME). • Communication settings (*Group 51: EXT COMM MODULE* or *Group 53: EFB PROTOCOL* as appropriate). • Poor connections and/or noise on line.
29	EFB CON FILE	Error in reading the configuration file for the embedded fieldbus.
30	FORCE TRIP	Fault trip forced by the fieldbus. See the fieldbus User's Manual.
31	EFB 1	Fault code reserved for the embedded fieldbus (EFB) protocol application. The meaning is protocol dependent.
32	EFB 2	
33	EFB 3	
34	MOTOR PHASE	Fault in the motor circuit. One of the motor phases is lost. Check for and correct: • Motor fault. • Motor cable fault. • Thermal relay fault (if used). • Internal fault.
35	OUTP WIRING	Possible power wiring error detected. When the drive is not running it monitors for an improper connection between the drive input power and the drive output. Check for and correct: • Proper input wiring – line voltage is NOT connected to drive output. • The fault can be erroneously declared if the input power is a delta grounded system and motor cable capacitance is large. This fault can be disabled using parameter 3023 WIRING FAULT.

Fault code	Fault name in panel	Description and recommended corrective action
36	INCOMPATIBLE SW	The drive cannot use the software. • Internal fault. • The loaded software is not compatible with the drive. • Call support representative.
37	CB OVERTEMP	Drive control board is overheated. The fault trip limit is 88 °C. Check for and correct: • Excessive ambient temperature. • Fan failure. • Obstructions in the air flow. Not for drives with an OMIO control board.
38	USER LOAD CURVE	Condition defined by parameter 3701 USER LOAD C MODE has been valid longer than the time defined by 3703 USER LOAD C TIME.
101…199	SYSTEM ERROR	Error internal to the drive. Contact your local ABB representative and report the error number.
201…299	SYSTEM ERROR	Error in the system. Contact your local ABB representative and report the error number.
-	UNKNOWN DRIVE TYPE: ACS550 SUPPORTED DRIVES: X	Wrong type of panel, i.e. panel that supports drive X but not the ACS550, has been connected to the ACS550.

Faults that indicate conflicts in the parameter settings are listed below.

Fault code	Fault name in panel	Description and recommended corrective action
1000	PAR HZRPM	Parameter values are inconsistent. Check for any of the following: • 2001 MINIMUM SPEED > 2002 MAXIMUM SPEED. • 2007 MINIMUM FREQ > 2008 MAXIMUM FREQ. • 2001 MINIMUM SPEED / 9908 MOTOR NOM SPEED is outside proper range (> 50). • 2002 MAXIMUM SPEED / 9908 MOTOR NOM SPEED is outside proper range (> 50). • 2007 MINIMUM FREQ / 9907 MOTOR NOM FREQ is outside proper range (> 50). • 2008 MAXIMUM FREQ / 9907 MOTOR NOM FREQ is outside proper range (> 50).
1001	PAR PFC REF NEG	Parameter values are inconsistent. Check for the following: • 2007 MINIMUM FREQ is negative, when 8123 PFC ENABLE is active.
1002	RESERVED	Not used.
1003	PAR AI SCALE	Parameter values are inconsistent. Check for any of the following: • 1301 MINIMUM AI1 > 1302 MAXIMUM AI1. • 1304 MINIMUM AI2 > 1305 MAXIMUM AI2.
1004	PAR AO SCALE	Parameter values are inconsistent. Check for any of the following: • 1504 MINIMUM AO1 > 1505 MAXIMUM AO1. • 1510 MINIMUM AO2 > 1511 MAXIMUM AO2.

Fault code	Fault name in panel	Description and recommended corrective action
1005	PAR PCU 2	Parameter values for power control are inconsistent: Improper motor nominal kVA or motor nominal power. Check for the following: • 1.1 ≤ (9906 MOTOR NOM CURR · 9905 MOTOR NOM VOLT · 1.73 / P_N) ≤ 3.0 where: P_N = 1000 · 9909 MOTOR NOM POWER (if units are kW) or P_N = 746 · 9909 MOTOR NOM POWER (if units are hp, e.g. in US)
1006	PAR EXT RO	Parameter values are inconsistent. Check for the following: • Extension relay module not connected and • 1410…1412 RELAY OUTPUTS 4…6 have non-zero values.
1007	PAR FIELDBUS MISSING	Parameter values are inconsistent. Check for and correct: • A parameter is set for fieldbus control (e.g. 1001 EXT1 COMMANDS = 10 (COMM)), but 9802 COMM PROT SEL = 0.
1008	PAR PFC MODE	Parameter values are inconsistent – 9904 MOTOR CTRL MODE must be = 3 (SCALAR:FREQ), when 8123 PFC ENABLE is activated.
1009	PAR PCU 1	Parameter values for power control are inconsistent: Improper motor nominal frequency or speed. Check for both of the following: • 1 ≤ (60 · 9907 MOTOR NOM FREQ / 9908 MOTOR NOM SPEED ≤ 16 • 0.8 ≤ 9908 MOTOR NOM SPEED / (120 · 9907 MOTOR NOM FREQ / Motor Poles) ≤ 0.992
1010/ 1011	RESERVED	Not used.
1012	PAR PFC IO 1	IO configuration is not complete – not enough relays are parameterized to PFC. Or, a conflict exists between *Group 14: RELAY OUTPUTS*, parameter 8117 NR OF AUX MOT and parameter 8118 AUTOCHNG INTERV.
1013	PAR PFC IO 2	IO configuration is not complete – the actual number of PFC motors (parameter 8127, MOTORS) does not match the PFC motors in *Group 14: RELAY OUTPUTS* and parameter 8118 AUTOCHNG INTERV.
1014	PAR PFC IO 3	IO configuration is not complete – the drive is unable to allocate a digital input (interlock) for each PFC motor (parameters 8120 INTERLOCKS and 8127 MOTORS).
1015	RESERVED	Not used.
1016	PAR USER LOAD C	Parameter values for the user load curve are inconsistent. Check that the following conditions are met: • 3704 LOAD FREQ 1 ≤ 3707 LOAD FREQ 2 ≤ 3710 LOAD FREQ 3 ≤ 3713 LOAD FREQ 4 ≤ 3716 LOAD FREQ 5. • 3705 LOAD TORQ LOW 1 ≤ 3706 LOAD TORQ HIGH 1. • 3708 LOAD TORQ LOW 2 ≤ 3709 LOAD TORQ HIGH 2. • 3711 LOAD TORQ LOW 3 ≤ 3712 LOAD TORQ HIGH 3. • 3714 LOAD TORQ LOW 4 ≤ 3715 LOAD TORQ HIGH 4. • 3717 LOAD TORQ LOW 5 ≤ 3718 LOAD TORQ HIGH 5.

Fault resetting

The ACS550 can be configured to automatically reset certain faults. Refer to parameter *Group 31: AUTOMATIC RESET*.

WARNING! If an external source for start command is selected and it is active, the ACS550 may start immediately after fault reset.

Flashing red LED

To reset the drive for faults indicated by a flashing red LED:

- Turn the power off for 5 minutes.

Red LED

To reset the drive for faults indicated by a red LED (on, not flashing), correct the problem and do one of the following:

- Press RESET from the control panel.
- Turn the power off for 5 minutes.

Depending on the value of 1604 FAULT RESET SEL, the following could also be used to reset the drive:

- digital input
- serial communication.

When the fault has been corrected, the motor can be started.

History

For reference, the last three fault codes are stored into parameters 0401, 0412, 0413. For the most recent fault (identified by parameter 0401), the drive stores additional data (in parameters 0402…0411) to aid in troubleshooting a problem. For example, parameter 0404 stores the motor speed at the time of the fault.

The Assistant Control Panel provides additional information about the fault history. See section *Fault Logger mode* on page *57* for more information.

To clear the fault history (all of the *Group 04: FAULT HISTORY* parameters):

1. Using the control panel in the Parameters mode, select parameter 0401.
2. Press EDIT (or ENTER on the Basic Control Panel).
3. Press UP and DOWN at the same time.
4. Press SAVE.

Correcting alarms

The recommended corrective action for alarms is:

- Determine if the alarm requires any corrective action (action is not always required).
- Use the table in section *Alarm listing* below to find and address the root cause of the problem.

Alarm listing

The following table lists the alarms by code number and describes each.

Alarm code	Display	Description
2001	OVERCURRENT	Current limiting controller is active. Check for and correct: • Excessive motor load. • Insufficient acceleration time (parameters 2202 ACCELER TIME 1 and 2205 ACCELER TIME 2). • Faulty motor, motor cables or connections.
2002	OVERVOLTAGE	Overvoltage controller is active. Check for and correct: • Static or transient overvoltages in the input power supply. • Insufficient deceleration time (parameters 2203 DECELER TIME 1 and 2206 DECELER TIME 2).
2003	UNDERVOLTAGE	Undervoltage controller is active. Check for and correct: • Undervoltage on mains.
2004	DIR LOCK	The change in direction being attempted is not allowed. Either: • Do not attempt to change the direction of motor rotation, or • Change parameter 1003 DIRECTION to allow direction change (if reverse operation is safe).
2005	IO COMM	Fieldbus communication has timed out. Check for and correct: • Fault setup (3018 COMM FAULT FUNC and 3019 COMM FAULT TIME). • Communication settings (*Group 51: EXT COMM MODULE* or *Group 53: EFB PROTOCOL* as appropriate). • Poor connections and/or noise on line.
2006	AI1 LOSS	Analog input 1 is lost, or value is less than the minimum setting. Check: • Input source and connections. • Parameter that sets the minimum (3021). • Parameter that sets the alarm/fault operation (3001),
2007	AI2 LOSS	Analog input 2 is lost, or value is less than the minimum setting. Check: • Input source and connections. • Parameter that sets the minimum (3022). • Parameter that sets the alarm/fault operation (3001).
2008	PANEL LOSS	Panel communication is lost and either: • Drive is in local control mode (the control panel displays LOC), or • Drive is in remote control mode (REM) and is parameterized to accept start/stop, direction or reference from the control panel. To correct check: • Communication lines and connections. • Parameter 3002 PANEL COMM ERR. • Parameters in *Group 10: START/STOP/DIR* and *Group 11: REFERENCE SELECT* (if drive operation is REM).

Alarm code	Display	Description
2009	DEVICE OVERTEMP	Drive heatsink is hot. This alarm warns that a DEVICE OVERTEMP fault may be near. R1…R4: 100 °C (212 °F) R5, R6: 110 °C (230 °F) Check for and correct: • Fan failure. • Obstructions in the air flow. • Dirt or dust coating on the heat sink. • Excessive ambient temperature. • Excessive motor load.
2010	MOTOR TEMP	Motor is hot, based on either the drive's estimate or on temperature feedback. This alarm warns that a MOT OVERTEMP fault trip may be near. Check: • Check for overloaded motor. • Adjust the parameters used for the estimate (3005…3009). • Check the temperature sensors and *Group 35: MOTOR TEMP MEAS*.
2011	RESERVED	Not used.
2012	MOTOR STALL	Motor is operating in the stall region. This alarm warns that a MOTOR STALL fault trip may be near.
2013 (Note 1)	AUTORESET	This alarm warns that the drive is about to perform an automatic fault reset, which may start the motor. • To control automatic reset, use *Group 31: AUTOMATIC RESET*.
2014 (Note 1)	AUTOCHANGE	This alarm warns that the PFC autochange function is active. • To control PFC, use *Group 81: PFC CONTROL* and the *PFC macro* on page *80*.
2015	PFC I LOCK	This alarm warns that the PFC interlocks are active, which means that the drive cannot start the following: • Any motor (when Autochange is used). • The speed regulated motor (when Autochange is not used).
2016/ 2017	RESERVED	Not used.
2018 (Note 1)	PID SLEEP	This alarm warns that the PID sleep function is active, which means that the motor could accelerate when the PID sleep function ends. • To control PID sleep, use parameters 4022…4026 or 4122…4126.
2019	ID RUN	Performing ID Run.
2020	RESERVED	Not used.
2021	START ENABLE 1 MISSING	This alarm warns that the Start Enable 1 signal is missing. • To control Start Enable 1 function, use parameter 1608. To correct, check: • Digital input configuration. • Communication settings.
2022	START ENABLE 2 MISSING	This alarm warns that the Start Enable 2 signal is missing. • To control Start Enable 2 function, use parameter 1609. To correct, check: • Digital input configuration. • Communication settings.

Alarm code	Display	Description
2023	EMERGENCY STOP	Emergency stop activated.
2024	ENCODER ERROR	The drive is not detecting a valid encoder signal. Check for and correct: • Encoder presence and proper connection (reverse wired, loose connection,or short circuit). • Voltage logic levels are outside of the specified range. • A working and properly connected Pulse Encoder Interface Module, OTAC-01. • Wrong value entered in parameter 5001 PULSE NR. A wrong value will only be detected if the error is such that the calculated slip is greater than 4 times the rated slip of the motor. • Encoder is not being used, but parameter 5002 ENCODER ENABLE = 1 (ENABLE).
2025	FIRST START	Signals that a the drive is performing a First Start evaluation of motor characteristics. This is normal the first time the motor is run after motor parameters are entered or changed. See parameter 9910 ID RUN for a description of motor models.
2026	RESERVED	Not used.
2027	USER LOAD CURVE	This alarm warns that the condition defined by parameter 3701 USER LOAD C MODE has been valid longer than half of the time defined by 3703 USER LOAD C TIME.
2028	START DELAY	Shown during the Start delay. See parameter 2113 START DELAY.

Note 1. Even when the relay output is configured to indicate alarm conditions (e.g. parameter 1401 RELAY OUTPUT 1 = 5 (ALARM) or 16 (FLT/ALARM)), this alarm is not indicated by a relay output.

Alarm codes (Basic Control Panel)

The Basic Control Panel indicates control panel alarms with a code, A5xxx. The following table lists the alarm codes and descriptions.

Code	Description
5001	Drive is not responding.
5002	The communication profile is incompatible with the drive.
5010	The panel's parameter backup file is corrupted.
5011	Drive is controlled from another source.
5012	Rotation direction is locked.
5013	Button is disabled, because start is inhibited.
5014	Button is disabled, because drive is faulted.
5015	Button is disabled, because local mode lock is on.
5018	Parameter default value can't be found.
5019	Writing a non-zero value is prohibited (can only write a zero value).
5020	Group or parameter does not exist or parameter value is inconsistent.
5021	Group or parameter is hidden.
5022	Group or parameter is write protected.
5023	Modification is not allowed while the drive is running.

Code	Description
5024	Drive is busy, try again.
5025	Write is not allowed while upload or download is in progress.
5026	Value is at or below low limit.
5027	Value is at or above high limit.
5028	Value is invalid – doesn't match any values in the discrete values list.
5029	Memory is not ready, try again.
5030	Request is invalid.
5031	Drive is not ready, e.g due to low DC voltage.
5032	Parameter error was detected.
5040	Selected parameter set can’t be found in the current parameter backup.
5041	Parameter backup doesn't fit into memory.
5042	Selected parameter set can’t be found in the current parameter backup.
5043	No start inhibit was granted.
5044	Parameter backup versions do not match.
5050	Parameter upload was aborted.
5051	File error was detected.
5052	Parameter upload attempt has failed.
5060	Parameter download was aborted.
5062	Parameter download attempt has failed.
5070	Panel backup memory write error was detected.
5071	Panel backup memory read error was detected.
5080	Operation is not allowed, because the drive is not in local mode.
5081	Operation is not allowed, because a fault is active.
5083	Operation is not allowed, because parameter lock is not open.
5084	Operation is not allowed, because drive is busy, try again.
5085	Download is not allowed, because drive types are incompatible.
5086	Download is not allowed, because drive models are incompatible.
5087	Download is not allowed, because parameter sets do not match.
5088	Operation failed, because a drive memory error was detected.
5089	Download failed, because a CRC error was detected.
5090	Download failed, because a data processing error was detected.
5091	Operation failed, because a parameter error was detected.
5092	Download failed, because parameter sets do not match.

Maintenance

WARNING! Read chapter *Safety* on page *5* before performing any maintenance on the equipment. Ignoring the safety instructions can cause injury or death.

Maintenance intervals

If installed in an appropriate environment, the drive requires very little maintenance. This table lists the routine maintenance intervals recommended by ABB.

Maintenance	Interval	Instruction
Heatsink temperature check and cleaning	Depends on the dustiness of the environment (every 6…12 months)	See *Heatsink* on page *265*.
Main cooling fan replacement	Every six years	See *Main fan replacement* on page *266*.
Internal enclosure cooling fan replacement (IP54 / UL type 12 drives)	Every three years.	See *Internal enclosure fan replacement* on *268*.
Capacitor reforming	Every year when stored	See *Reforming* on page *269*.
Capacitor replacement (frame sizes R5 and R6)	Every nine years	See *Replacement* on page *269*.
Replace battery in the Assistant Control Panel	Every ten years	See *Battery* on page *269*.

Consult your local ABB Service representative for more details on the maintenance. On the Internet, go to www.abb.com/drive and select *Drive Services – Maintenance and Field Services*.

Heatsink

The heatsink fins accumulate dust from the cooling air. Since a dusty heatsink is less efficient at cooling the drive, overtemperature faults become more likely. In a "normal" environment (not dusty, not clean) check the heatsink annually, in a dusty environment check more often.

Clean the heatsink as follows (when necessary):

1. Remove power from the drive.
2. Remove the cooling fan (see section *Main fan replacement* on page *266*).
3. Blow clean compressed air (not humid) from bottom to top and simultaneously use a vacuum cleaner at the air outlet to trap the dust.

Note: If there is a risk of the dust entering adjoining equipment, perform the cleaning in another room.

4. Reinstall the cooling fan.
5. Restore power.

Main fan replacement

The drive's main cooling fan has a life span of about 60 000 operating hours at maximum rated operating temperature and drive load. The expected life span doubles for each 10 °C (18 °F) drop in the fan temperature (fan temperature is a function of ambient temperatures and drive loads).

Fan failure can be predicted by the increasing noise from fan bearings and the gradual rise in the heatsink temperature in spite of heatsink cleaning. If the drive is operated in a critical part of a process, fan replacement is recommended once these symptoms start appearing. Replacement fans are available from ABB. Do not use other than ABB specified spare parts.

Frame sizes R1...R4

To replace the fan:

1. Remove power from the drive.
2. Remove drive cover.
3. For frame size:
   - R1, R2: Press together the retaining clips on the fan cover sides, and lift.
   - R3, R4: Press in on the lever located on the left side of the fan mount, and rotate the fan up and out.
4. Disconnect the fan cable.
5. Reinstall the fan in reverse order.
6. Restore power.

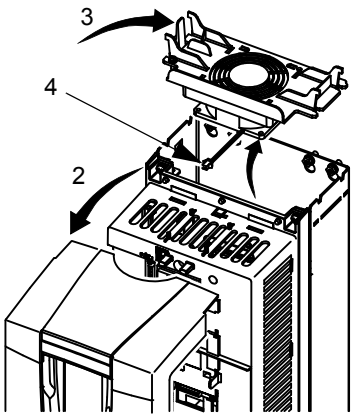

Frame size R5

To replace the fan:

1. Remove power from drive.
2. Remove the screws attaching the fan.
3. Remove the fan: Swing the fan out on its hinges.
4. Disconnect the fan cable.
5. Reinstall the fan in reverse order.
6. Restore power.

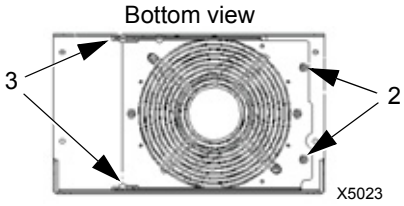

Arrows in the fan show the directions of the rotation and air flow.

Frame size R6

To replace the fan:

1. Remove power from the drive.
2. Remove the screw attaching the fan casing and let the casing lean down against the limiters.
3. Slide out the cable connector and disconnect it.
4. Take off the casing and replace the fan onto the casing's pins.
5. Reinstall the casing in reverse order.
6. Restore power.

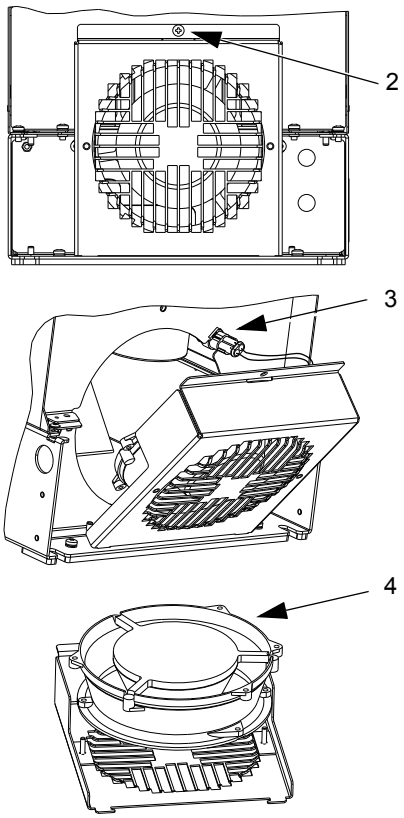

Internal enclosure fan replacement

IP54 / UL type 12 enclosures have an additional internal fan to circulate air inside the enclosure.

Frame sizes R1…R4

To replace the internal enclosure fan in frame sizes R1 to R3 (located at the top of the drive) and R4 (located in front of the drive):

1. Remove power from the drive.
2. Remove the front cover.
3. The housing that holds the fan in place has barbed retaining clips at each corner. Press all four clips toward the center to release the barbs.
4. When the clips/barbs are free, pull the housing up to remove from the drive.
5. Disconnect the fan cable.
6. Install the fan in reverse order, noting that:
   - The fan air flow is up (refer to the arrow on fan).
   - The fan wire harness is toward the front.
   - The notched housing barb is located in the right-rear corner.
   - The fan cable connects just forward of the fan at the top of the drive.

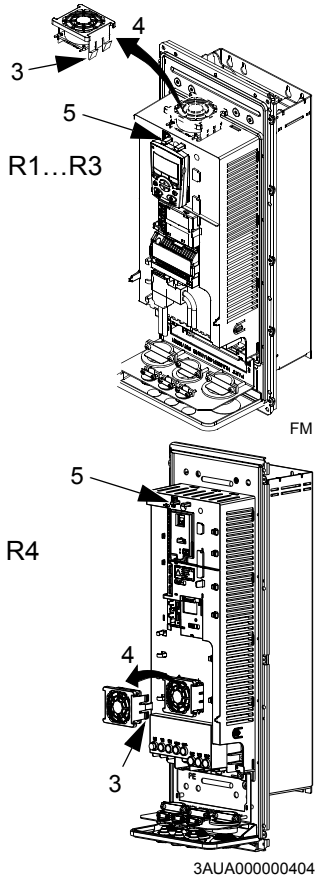

Frame sizes R5 and R6

To replace the internal enclosure fan in frame sizes R5 or R6:

1. Remove power from the drive.
2. Remove the front cover.
3. Lift the fan out and disconnect the cable.
4. Install the fan in reverse order.
5. Restore power.

Capacitors

Reforming

The drive DC link capacitors need to be reformed (re-aged) if the drive has been non-operational for more than one year. Without reforming, capacitors may be damaged when the drive starts to operate. It is therefore recommended to reform the capacitors once a year. See section *Serial number* on page *13* for how to check the date of manufacture from the serial number shown on the drive labels.

For information on reforming the capacitors, refer to *Guide for Capacitor Reforming in ACS50, ACS55, ACS150, ACS310, ACS320, ACS350, ACS550 and ACH550* (3AFE68735190 [English]), available on the Internet (go to www.abb.com and enter the code in the Search field).

Replacement

The drive intermediate circuit employs several electrolytic capacitors. Their life span is from 35 000...90 000 hours depending on drive loading and ambient temperature. Capacitor life can be prolonged by lowering the ambient temperature.

It is not possible to predict a capacitor failure. Capacitor failure is usually followed by a input power fuse failure or a fault trip. Contact ABB if capacitor failure is suspected. Replacements for frame size R5 and R6 are available from ABB. Do not use other than ABB specified spare parts.

Control panel

Cleaning

Use a soft damp cloth to clean the control panel. Avoid harsh cleaners which could scratch the display window.

Battery

A battery is only used in Assistant Control Panels that have the clock function available and enabled. The battery keeps the clock operating in memory during power interruptions.

The expected life for the battery is greater than ten years. To remove the battery, use a coin to rotate the battery holder on the back of the control panel. Replace the battery with type CR2032.

Note: The battery is NOT required for any control panel or drive function, except the clock.

Technical data

Ratings

By type designation, the table below provides ratings for the ACS550 adjustable speed AC drive, including:

- IEC ratings
- NEMA ratings (shaded columns)
- frame size.

Ratings, 208…240 V drives

Abbreviated column headers are described in section *Symbols* on page *273*.

Type	Normal use			Heavy-duty use			Frame size
ACS550-x1- see below	I_{2N} A	P_N kW	P_N hp	I_{2hd} A	P_{hd} kW	P_{hd} hp	
Three-phase supply voltage, 208…240 V							
-04A6-2	4.6	0.75	1	3.5	0.55	0.75	R1
-06A6-2	6.6	1.1	1.5	4.6	0.75	1	R1
-07A5-2	7.5	1.5	2	6.6	1.1	1.5	R1
-012A-2	11.8	2.2	3	7.5	1.5	2	R1
-017A-2	16.7	4	5	11.8	2.2	3	R1
-024A-2	24.2	5.5	7.5	16.7	4	5	R2
-031A-2	30.8	7.5	10	24.2	5.5	7.5	R2
-046A-2	46.2	11	15	30.8	7.5	10	R3
-059A-2	59.4	15	20	46.2	11	15	R3
-075A-2	74.8	18.5	25	59.4	15	20	R4
-088A-2	88.0	22	30	74.8	18.5	25	R4
-114A-2	114	30	40	88.0	22	30	R4
-143A-2	143	37	50	114	30	40	R6
-178A-2	178	45	60	150	37	50	R6
-221A-2	221	55	75	178	45	60	R6
-248A-2	248	75	100	192	55	75	R6

00467918.xls C

Ratings, 380…480 V drives

Abbreviated column headers are described in section *Symbols* on page *273*.

Type	Normal use			Heavy-duty use			Frame size
ACS550-x1- see below	I_{2N} **A**	P_N **kW**	P_N **hp**	I_{2hd} **A**	P_{hd} **kW**	P_{hd} **hp**	
Three-phase supply voltage, **380**…**480 V**							
-03A3-4	3.3	1.1	1.5	2.4	0.75	1	R1
-04A1-4	4.1	1.5	2	3.3	1.1	1.5	R1
-05A4-4	5.4	2.2	Note 1	4.1	1.5	Note 1	R1
-06A9-4	6.9	3	3	5.4	2.2	3	R1
-08A8-4	8.8	4	5	6.9	3	3	R1
-012A-4	11.9	5.5	7.5	8.8	4	5	R1
-015A-4	15.4	7.5	10	11.9	5.5	7.5	R2
-023A-4	23	11	15	15.4	7.5	10	R2
-031A-4	31	15	20	23	11	15	R3
-038A-4	38	18.5	25	31	15	20	R3
-045A-4	45	22	30	38	18.5	25	R3
-059A-4	59	30	40	44	22	30	R4
-072A-4	72	37	50	59	30	40	R4
-078A-4	77	Note 2	60	72	Note 2	50	R4
-087A-4	87	45	Note 1	72	37	Note 1	R4
-097A-4	97	Note 2	75	77	Note 2	60	R4
-125A-4	125	55	Note 1	87	45	Note 1	R5
-125A-4	125	Note 2	100	96	Note 2	75	R5
-157A-4	157	75	125	124	55	100	R6
-180A-4	180	90	150	156	75	125	R6
-195A-4	205	110	Note 1	162	90	Note 1	R6
-246A-4	246	132	200	192	110	150	R6
-290A-4	290	160	Note 1	246	132	200	R6

00467918.xls C

1. Not available in ACS550-U1 series.
2. Not available in ACS550-01 series.

Ratings, 500…600 V drives

Abbreviated column headers are described in section *Symbols* on page *273*.

Type	Normal use			Heavy-duty use			Frame size
ACS550-U1- see below	I_{2N} A	P_N kW	P_N hp	I_{2hd} A	P_{hd} kW	P_{hd} hp	
Three-phase supply voltage, **500**…**600 V** (Note 1)							
-02A7-6	2.7	1.5	2	2.4	1.1	1.5	R2
-03A9-6	3.9	2.2	3	2.7	1.5	2	R2
-06A1-6	6.1	4	5	3.9	2.2	3	R2
-09A0-6	9.0	5.5	7.5	6.1	4	5	R2
-011A-6	11	7.5	10	9.0	5.5	7.5	R2
-017A-6	17	11	15	11	7.5	10	R2
-022A-6	22	15	20	17	11	15	R3
-027A-6	27	18.5	25	22	15	20	R3
-032A-6	32	22	30	27	18.5	25	R4
-041A-6	41	30	40	32	22	30	R4
-052A-6	52	37	50	41	30	40	R4
-062A-6	62	45	60	52	37	50	R4
-077A-6	77	55	75	62	45	60	R6
-099A-6	99	75	100	77	55	75	R6
-125A-6	125	90	125	99	75	100	R6
-144A-6	144	110	150	125	90	125	R6

00467918.xls C

1. Not available in ACS550-01 series.

Symbols

Typical ratings:

Normal use (10% overload capability)

I_{2N} continuous rms current. 10% overload is allowed for one minute in ten minutes.

P_N typical motor power in normal use. The kilowatt power ratings apply to most IEC, 4-pole motors. The horsepower ratings apply to most 4-pole NEMA motors.

Heavy-duty use (50% overload capability)

I_{2hd} continuous rms current. 50% overload is allowed for one minute in ten minutes.

P_{hd} typical motor power in heavy duty use. The kilowatt power ratings apply to most IEC, 4-pole motors. The horsepower ratings apply to most 4-pole NEMA motors.

Sizing

The current ratings are the same regardless of the supply voltage within one voltage range. To achieve the rated motor power given in the table, the rated current of the drive must be higher than or equal to the rated motor current. Also note that:

- the ratings apply for ambient temperature of 40 °C (104 °F)
- the maximum allowed motor shaft power is limited to 1.5 · P_{hd}. If the limit is exceeded, motor torque and current are automatically restricted. The function protects the input bridge of the drive against overload.

In multimotor systems, the output current of the drive must be equal to or greater than the calculated sum of the input currents of all motors.

Derating

The load capacity (current and power) decreases for certain situations, as defined below. In such situations, where full motor power is required, oversize the drive so that the derated value provides sufficient capacity.

For example, if your application requires 15.4 A of motor current and a 8 kHz switching frequency, calculate the appropriate drive size requirement as follows:

The minimum size required = 15.4 A / 0.80 = 19.25 A

Where: 0.80 is the derating for 8 kHz switching frequency (see section *Switching frequency derating* on page *274*).

Referring to I_{2N} in the ratings tables (starting from page *271*), the following drives exceed the I_{2N} requirement of 19.25 A: ACS550-x1-023A-4, or ACS550-x1-024A-2.

Temperature derating

In the temperature range +40 °C...50 °C (+104 °F...122 °F), the rated output current is decreased 1% for every 1 °C (1.8 °F) above +40 °C (+104 °F). Calculate the output current by multiplying the current given in the rating table by the derating factor.

Example If the ambient temperature is 50 °C (+122 °F), the derating factor is 100% - 1%/°C · 10 °C = 90% or 0.90.
The output current is then 0.90 · I_{2N} or 0.90 · I_{2hd}.

Altitude derating

In altitudes 1000...4000 m (3300...13,200 ft) above sea level, the derating is 1% for every 100 m (330 ft). If the installation site is higher than 2000 m (6600 ft) above sea level, please contact your local ABB distributor or office for further information.

Single phase supply derating

For 208…240 V series drives, a single phase supply can be used. In that case, the derating is 50%.

Switching frequency derating

When using the 8 kHz switching frequency (parameter 2606),

- derate all rated currents and powers (including drive's overload currents) to 80%.

When using the 12 kHz switching frequency (parameter 2606),

- derate all rated currents and powers (including drive's overload currents) to 65% (to 50% for 600 V, R4 frame sizes, that is for ACS550-U1-032A-6 … ACS550-U1-062A-6),
- derate ambient temperature maximum to 30 °C (86 °F).
- Note: The continuous maximum current is limited to I_{2hd}.

Note: Setting parameter 2607 SWITCH FREQ CTRL = 1 (ON) allows the drive to reduce the switching frequency if/when the drive's internal temperature exceeds 80 °C (with 12 kHz switching frequency) or 90 °C (with 8 kHz switching frequency). See the parameter description for 2607 for details.

Input power connections

WARNING! Do not operate the drive outside the nominal input line voltage range. Overvoltage can result in permanent damage to the drive.

Input power specifications

Input power (mains) connection specifications	
Voltage (U_1)	208/220/230/240 V AC 3-phase (or 1-phase) -15%…+10% for ACS550-x1-xxxx-2. 380/400/415/440/460/480 V AC 3-phase -15%…+10% for ACS550-x1-xxxx-4. 500/525/575/600 V AC 3-phase -15%…+10% for ACS550-U1-xxxx-6.
Prospective short-circuit current (IEC 629)	Maximum allowed prospective short-circuit current in the supply is 100 kA providing that the input power cable of the drive is protected with appropriate fuses. US: 100 000 AIC.
Frequency	48…63 Hz
Imbalance	Max. ± 3% of nominal phase to phase input voltage
Fundamental power factor (cos phi$_1$)	0.98 (at nominal load)
Cable temperature rating	90 °C (194 °F) rating minimum

Disconnecting device for isolation

Install a hand-operated input disconnecting device (disconnecting means) between the AC power source and the drive. The disconnecting device must be of a type that can be locked to the open position for installation and maintenance work.

- **Europe**: To meet the European Union Directives, according to standard EN 60204-1, Safety of Machinery, the disconnecting device must be one of the following types:
  - a switch-disconnector of utilization category AC-23B (EN 60947-3)
  - a disconnector having an auxiliary contact that in all cases causes switching devices to break the load circuit before the opening of the main contacts of the disconnector (EN 60947-3)
  - a circuit breaker suitable for isolation in accordance with EN 60947-2.
- **Other regions**: The disconnecting device must conform to the applicable safety regulations.

Fuses

Branch circuit protection must be provided by the end user and sized per national and local electric codes. The following tables provide fuse recommendations for short circuit protection on the drive's input power.

The rated fuse currents given in the tables are the maximums for the mentioned fuse types. If smaller fuse ratings are used, check that the fuse rms current rating is larger than the input current.

Check that the operating time of the fuse is below 0.5 seconds. The operating time depends on the fuse type, the supply network impedance as well as the cross-sectional area, material and length of the supply cable. In case the 0.5 seconds operating time is exceeded with the gG or T fuses, ultra rapid (aR) fuses will in most cases reduce the operating time to an acceptable level.

Fuses, 208…240 V drives

ACS550-x1- see below	Input current A	Input power (mains) fuses		
		IEC 60269 gG (A)	UL Class T (A)	Bussmann type
-04A6-2	4.6	10	10	JJS-10
-06A6-2	6.6			
-07A5-2	7.5			
-012A-2	11.8	16	15	JJS-15
-017A-2	16.7	25	25	JJS-25
-024A-2	24.2		30	JJS-30
-031A-2	30.8	40	40	JJS-40
-046A-2	46.2	63	60	JJS-60
-059A-2	59.4		80	JJS-80
-075A-2	74.8	80	100	JJS-100
-088A-2	88.0	100	110	JJS-110
-114A-2	114	125	150	JJS-150
-143A-2	143	200	200	JJS-200
-178A-2	178	250	250	JJS-250
-221A-2	221	315	300	JJS-300
-248A-2	248		350	JJS-350

00467918.xls C

Fuses, 380…480 V drives

ACS550-x1- see below	Input current A	Input power (mains) fuses		
		IEC 60269 gG (A)	UL Class T (A)	Bussmann type
-03A3-4	3.3	10	10	JJS-10
-04A1-4	4.1			
-05A4-4	5.4			
-06A9-4	6.9			
-08A8-4	8.8		15	JJS-15
-012A-4	11.9	16		
-015A-4	15.4		20	JJS-20
-023A-4	23	25	30	JJS-30
-031A-4	31	35	40	JJS-40
-038A-4	38	50	50	JJS-50
-045A-4	45		60	JJS-60
-059A-4	59	63	80	JJS-80
-072A-4	72	80	90	JJS-90
-078A-4	77		100	JJS-100

ACS550-x1- see below	Input current A	Input power (mains) fuses		
		IEC 60269 gG (A)	UL Class T (A)	Bussmann type
-087A-4	87	125	125	JJS-125
-097A-4	97			
-125A-4	125	160	175	JJS-175
-157A-4	157	200	200	JJS-200
-180A-4	180	250	250	JJS-250
-195A-4	205			
-246A-4	246	315	350	JJS-350
-290A-4	290			

00467918.xls C

Fuses, 500…600 V drives

ACS550-U1- see below	Input current A	Input power (mains) fuses		
		IEC 60269 gG (A)	UL Class T (A)	Bussmann type
-02A7-6	2.7	10	10	JJS-10
-03A9-6	3.9			
-06A1-6	6.1			
-09A0-6	9.0	16	15	JJS-15
-011A-6	11			
-017A-6	17	25	25	JJS-25
-022A-6	22			
-027A-6	27	35	40	JJS-40
-032A-6	32			
-041A-6	41	50	50	JJS-50
-052A-6	52	60	60	JJS-60
-062A-6	62	80	80	JJS-80
-077A-6	77		100	JJS-100
-099A-6	99	125	150	JJS-150
-125A-6	125	160	175	JJS-175
-144A-6	144	200	200	JJS-200

00467918.xls C

Emergency stop devices

The overall design of the installation must include emergency stop devices and any other safety equipment that may be needed. Pressing STOP on the drive's control panel does NOT:

- generate an emergency stop of the motor
- separate the drive from dangerous potential.

Input power cables/wiring

Input wiring can be any of:

- a four conductor cable (three phases and ground/protective earth). Shielding is not required.
- four insulated conductors routed through conduit.

Size wiring according to local safety regulations, appropriate input voltage and the drive's load current. In any case, the conductor must be less than the maximum limit defined by the terminal size (see section *Drive's power connection terminals* on page *280*).

The table below lists copper and aluminium cable types for different load currents. These recommendations apply only for the conditions listed at the top of the table.

IEC					NEC	
Based on: • EN 60204-1 and IEC 60364-5-2/2001 • PVC insulation • 30 °C (86 °F) ambient temperature • 70 °C (158 °F) surface temperature • cables with concentric copper shield • not more than nine cables laid on cable ladder side by side.					Based on: • NEC Table 310-16 for copper wires • 90 °C (194 °F) wire insulation • 40 °C (104 °F) ambient temperature • not more than three current-carrying conductors in raceway or cable, or earth (directly buried) • copper cables with concentric copper shield.	
Max. load current A	**Cu cable mm²**		**Max. load current A**	**Al cable mm²**	**Max. load current A**	**Cu wire size AWG/kcmil**
14	3×1.5		Aluminium cable cannot be used with frame sizes R1…R5 because of its lower capacity.		22.8	14
20	3×2.5				27.3	12
27	3×4				36.4	10
34	3×6				50.1	8
47	3×10				68.3	6
62	3×16				86.5	4
79	3×25				100	3
98	3×35		91	3×50	118	2
119	3×50		117	3×70	137	1
153	3×70		143	3×95	155	1/0
186	3×95		165	3×120	178	2/0
215	3×120		191	3×150	205	3/0
249	3×150		218	3×185	237	4/0
284	3×185		257	3×240	264	250 MCM or 2 × 1
330	3×240		274	3× (3×50)	291	300 MCM or 2 × 1/0
			285	2× (3×95)	319	350 MCM or 2 × 2/0

Ground connections

For personnel safety, proper operation and reduction of electromagnetic emission/ pick-up, the drive and the motor must be grounded at the installation site.

- Conductors must be adequately sized as required by safety regulations.
- Power cable shields must be connected to the drive PE terminal in order to meet safety regulations.
- Power cable shields are suitable for use as equipment grounding conductors only when the shield conductors are adequately sized as required by safety regulations.
- In multiple drive installations, do not connect drive terminals in series.

Corner grounded TN systems

WARNING! Do not attempt to install or remove the EMC filter screws EM1, EM3, F1 or F2 while power is applied to the drive's input terminals.

Corner grounded TN systems are defined in the following table. In such systems, disconnect the internal ground connection through the EMC filter capacitors (do this also if the grounding configuration of the system is unknown), see section *Disconnecting the internal EMC filter* on page *23*.

Corner grounded TN systems – EMC filter must be disconnected				
Grounded at the corner of the delta	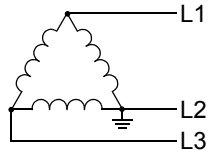		Grounded at the mid point of a delta leg	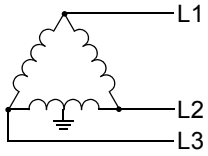
Single phase, grounded at an end point	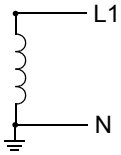		Three phase "Variac" without solidly grounded neutral	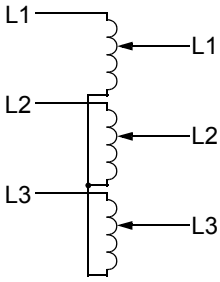

The EMC filter capacitors make an internal ground connection that reduces electro-magnetic emission. Where EMC (electro-magnetic compatibility) is a concern, and the system is symmetrically grounded, the EMC filter may be connected. For reference, the diagram on the right illustrates a symmetrically grounded TN system (TN-S system).

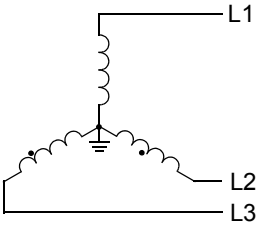

IT systems

WARNING! Do not attempt to install or remove the EMC filter screws EM1, EM3, F1 or F2 while power is applied to the drive's input terminals.

For IT systems (an ungrounded power system or a high-resistance-grounded [over 30 ohm] power system):

- Disconnect the ground connection to the internal EMC filter, see section *Disconnecting the internal EMC filter* on page *23*.
- Where EMC requirements exist, check for excessive emission propagated to neighboring low voltage networks. In some cases, the natural suppression in transformers and cables is sufficient. If in doubt, use a supply transformer with static screening between the primary and secondary windings.
- Do NOT install an external RFI/EMC filter. Using an EMC filter grounds the input power through the filter capacitors, which could be dangerous and could damage the drive.

Drive's power connection terminals

The following table provides specifications for the drive's power connection terminals.

Frame size	U1, V1, W1 U2, V2, W2 BRK±, UDC± terminals						Earthing PE terminal			
	Minimum wire size		Maximum wire size		Tightening torque		Maximum wire size		Tightening torque	
	mm²	AWG	mm²	AWG	N·m	lb·ft	mm²	AWG	N·m	lb·ft
R1[1]	0.75	18	10	8	1.4	1	10	8	1.4	1
R2[1]	0.75	18	10	8	1.4	1	10	8	1.4	1
R3[1]	2.5	14	25	3	2.5	1.8	16	6	1.8	1.3
R4[1]	6	10	50	1/0	5.6	4	25	3	2	1.5
R5[1]	6	10	70	2/0	15	11	70	2/0	15	11
R6[2]	95[3]	3/0[3]	240	350 MCM	40	30	95	3/0	8	6

00467918.xls C

[1] Aluminium cable cannot be used with frame sizes R1…R5 because of its lower capacity.

[2] Aluminium cable cannot be used with type ACS550-01-290A-4 because of the terminal size.

[3] See section *Power terminal considerations – R6 frame size* on page *281*.

Note: See the recommended cable sizes for different load currents in section *Input power cables/ wiring* on page *278*.

Power terminal considerations – R6 frame size

WARNING! For R6 power terminals, if screw-on terminal lugs are supplied, they can only be used for wire sizes that are 95 mm^2 (3/0 AWG) or larger. Smaller wires will loosen and may damage the drive. They require crimp-on ring lugs as described below.

Crimp-on ring lugs

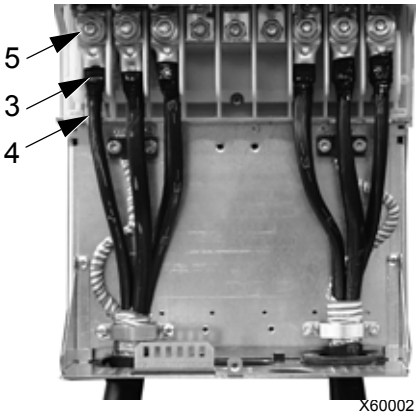

On the R6 frame size, if screw-on terminal lugs are supplied but the cable size used is less than 95 mm^2 (3/0 AWG), or if no screw-on terminal lugs are supplied at all, use crimp-on ring lugs according to the following procedure.

1. Select appropriate ring lugs from the following table.
2. Remove the screw-on terminal lugs, if supplied.
3. Attach the ring lugs to the drive end of the cables.
4. Isolate the ends of the ring lugs with insulating tape or shrink tubing.
5. Attach the ring lugs to the drive.

Wire size		Manufacturer	Ring lug	Crimping tool	No. of crimps
mm^2	kcmil/ AWG				
16	6	Burndy	YAV6C-L2	MY29-3	1
		Ilsco	CCL-6-38	ILC-10	2
25	4	Burndy	YA4C-L4BOX	MY29-3	1
		Ilsco	CCL-4-38	MT-25	1
35	2	Burndy	YA2C-L4BOX	MY29-3	2
		Ilsco	CRC-2	IDT-12	1
		Ilsco	CCL-2-38	MT-25	1
50	1	Burndy	YA1C-L4BOX	MY29-3	2
		Ilsco	CRA-1-38	IDT-12	1
		Ilsco	CCL-1-38	MT-25	1
		Thomas & Betts	54148	TBM-8	3
55	1/0	Burndy	YA25-L4BOX	MY29-3	2
		Ilsco	CRB-0	IDT-12	1
		Ilsco	CCL-1/0-38	MT-25	1
		Thomas & Betts	54109	TBM-8	3

Wire size		Manufacturer	Ring lug	Crimping tool	No. of crimps
mm^2	kcmil/ AWG				
70	2/0	Burndy	YAL26T38	MY29-3	2
		Ilsco	CRA-2/0	IDT-12	1
		Ilsco	CCL-2/0-38	MT-25	1
		Thomas & Betts	54110	TBM-8	3
95	3/0	Burndy	YAL27T38	MY29-3	2
		Ilsco	CRA-3/0	IDT-12	1
		Ilsco	CCL-3/0-38	MT-25	1
		Thomas & Betts	54111	TBM-8	3
95	3/0	Burndy	YA28R4	MY29-3	2
		Ilsco	CRA-4/0	IDT-12	1
		Ilsco	CCL-4/0-38	MT-25	2
		Thomas & Betts	54112	TBM-8	4

Screw-on terminal lugs

Use the following procedure to attach cables if screw-on terminal lugs are supplied and the cable size is 95 mm^2 (3/0 AWG) or larger.

1. Attach the supplied screw-on lugs to the drive end of the cables.
2. Attach screw-on lugs to the drive.

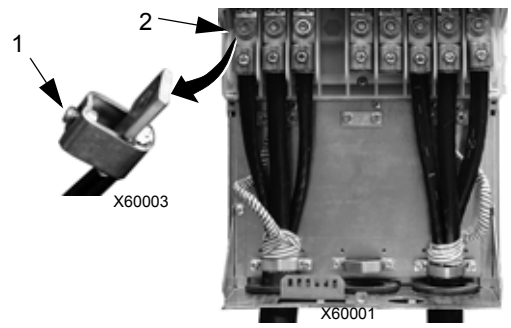

Motor connections

WARNING! Never connect line power to the drive output terminals: U2, V2 or W2. Line voltage applied to the output can result in permanent damage to the drive. If frequent bypassing is required, use mechanically interlocked switches or contactors.

WARNING! Do not connect any motor with a nominal voltage less than one half of the drive's nominal input voltage.

WARNING! Disconnect the drive before conducting any voltage tolerance (Hi-Pot) test or insulation resistance (Megger) test on the motor or motor cables. Do not conduct these tests on the drive.

Motor connection specifications

<table>
<tr><th colspan="2">Motor connection specifications</th></tr>
<tr><td>Voltage (U_2)</td><td>0…U_1, 3-phase symmetrical, U_{max} at the field weakening point</td></tr>
<tr><td>Frequency</td><td>0…500 Hz</td></tr>
<tr><td>Frequency resolution</td><td>0.01 Hz</td></tr>
<tr><td>Current</td><td>See section Ratings on page 271.</td></tr>
<tr><td>Field weakening point</td><td>10…500 Hz</td></tr>
<tr><td>Switching frequency</td><td>Selectable. See the availability in the table below.
<table>
<tr><th></th><th>1, 2, 4 and 8 kHz</th><th>12 kHz</th></tr>
<tr><td>208…240 V</td><td>All types</td><td>Frame sizes R1…R4 in scalar control mode</td></tr>
<tr><td>380…480 V</td><td>All types</td><td>Frame sizes R1…R4 (except ACS550-01-097A-4) in scalar control mode</td></tr>
<tr><td>500…600 V</td><td>All types</td><td>Frame sizes R2…R4 in scalar control mode</td></tr>
</table></td></tr>
<tr><td>Cable temperature rating</td><td>90 °C (194 °F) rating minimum.</td></tr>
<tr><td>Maximum motor cable length</td><td>See section Motor cable lengths on page 283.</td></tr>
</table>

Motor cable lengths

Maximum motor cable lengths for 400 V and 600 V drives are given in the sections below.

In multimotor systems, the calculated sum of all motor cable lengths must not exceed the maximum motor cable length given in the appropriate table below.

Motor cable length for 400 V drives

The table below shows the maximum motor cable lengths for 400 V drives with different switching frequencies. Examples for using the table are also given.

Maximum cable length for 400 V drives																		
Frame size	EMC limits												Operational limits					
	Second environment (category C3[1])						First environment (category C2[1])						Basic unit				With du/dt filters	
	1 kHz		4 kHz		8 kHz		1 kHz		4 kHz		8 kHz		1/4 kHz		8/12 kHz			
	m	ft	m	ft	m	ft	m	ft	m	ft	m	ft	m	ft	m	ft	m	ft
R1	300	980	300	980	300	980	300	980	300	980	300	980	100	330	100	330	150	490
R2	300	980	300	980	300	980	300	980	100	330	30	98	200	660	100	330	250	820
R3	300	980	300	980	300	980	300	980	75	245	75	245	200	660	100	330	250	820
R4	300	980	300	980	300	980	300	980	75	245	75	245	200	660	100	330	300	980
R5	100	330	100	330	100	330	100	330	100	330	100	330	300	980	150[2]	490[2]	300	980
R6	100	330	100	330	[3]	[3]	100	330	100	330	[3]	[3]	300	980	150[2]	490[2]	300	980

[1] See the new terms in section *IEC/EN 61800-3 (2004) Definitions* on page *305*.

[2] 12 kHz switching frequency is not available.

[3] Not tested.

Sine filters further extend the cable lengths.

Under heading "Operational limits", the "Basic unit" columns define the cable lengths with which the basic drive unit works without problems within the drive specification, without installing any further options. Column "With du/dt filters" defines the cable lengths when an external du/dt filter is used.

The columns under heading "EMC limits" show the maximum cable lengths with which the units have been tested for EMC emissions. The factory guarantees that these cable lengths meet the EMC standard requirements.

If external sine filters are installed, longer cable lengths can be used. With sine filters the limiting factors are the voltage drop of the cable, which has to be taken into account in engineering, as well as the EMC limits (where applicable).

The default switching frequency is 4 kHz.

WARNING! Using a motor cable longer than specified in the table above may cause permanent damage to the drive.

Examples for using the table:

Requirements	Checking and conclusions
R1 frame size, 8 kHz fsw, Category C2, 150 m (490 ft) cable	Check operational limits for R1 and 8 kHz -> for a 150 m (490 ft) cable a du/dt filter is needed. Check EMC limits -> EMC requirements for Category C2 are met with a 150 m (490 ft) cable.

Requirements	Checking and conclusions
R3 frame size, 4 kHz fsw, Category C3, 300 m (980 ft) cable	Check operational limits for R3 and 4 kHz -> a 300 m (980 ft) cable cannot be used even with a du/dt filter. A sine filter must be used and the voltage drop of the cable must be taken into account in the installation. Check EMC limits -> EMC requirements for Category C3 are met with a 300 m (980 ft) cable.
R5 frame size, 8 kHz fsw, Category C3, 150 m (490 ft) cable	Check operational limits for R5 and 8 kHz -> for a 150 m (490 ft) cable the basic unit is sufficient. Check EMC limits -> EMC requirements for Category C3 cannot be met with a 300 m (980 ft) cable. The installation configuration is not possible. An EMC plan is recommended to overcome the situation.
R6 frame size, 4 kHz fsw, EMC limits not applicable, 150 m (490 ft) cable	Check operational limits for R6 and 4 kHz -> for a 150 m (490 ft) cable the basic unit is sufficient. EMC limits do not need to be checked as there are no EMC requirements.

Motor cable length for 600 V drives

The table below shows the maximum motor cable lengths for 600 V drives with different switching frequencies. As the 600 V drives are not CE approved, cable lengths for EMC limits are not given.

Maximum cable length for 600 V drives				
Frame size	Operational limits			
	1/4 kHz		8/12 kHz	
	m	ft	m	ft
R2	100	330	100	330
R3…R4	200	660	100	330
R6	300	980	150[2]	490[2]

[2] 12 kHz switching frequency is not available.

WARNING! Using a motor cable longer than specified in the table above may cause permanent damage to the drive.

Motor thermal protection

According to regulations, the motor must be protected against thermal overload and the current must be switched off when overload is detected. The drive includes a motor thermal protection function that protects the motor and switches off the current when necessary. Depending on a drive parameter value (see parameter 3501 SENSOR TYPE), the function either monitors a calculated temperature value (based on a motor thermal model, see parameters 3005 MOT THERM PROT … 3009 BREAK POINT FREQ) or an actual temperature indication given by motor temperature sensors (see *Group 35: MOTOR TEMP MEAS*). The user can tune the thermal model further by feeding in additional motor and load data.

The most common temperature sensors are:

- motor sizes IEC180…225: thermal switch (e.g. Klixon)
- motor sizes IEC200…250 and larger: PTC or PT100.

Ground fault protection

ACS550 internal fault logic detects ground faults in the drive, motor, or motor cable. This fault logic:

- is NOT a personal safety or fire protection feature
- can be disabled using parameter 3017 EARTH FAULT

  Note: Disabling earth fault (ground fault) may void the warranty.
- could be tripped by leakage currents (input power to ground) associated with long high capacitance motor cables.

Grounding and routing

Motor cable shielding

Motor cables require shielding using conduit, armored cable or shielded cable.

- Conduit – When using conduit:
  - Bridge joints with a ground conductor bonded to the conduit on each side of the joint.
  - Bond conduit run to the drive enclosure.
  - Use a separate conduit run for motor cables (also separate input power and control cables).
  - Use a separate conduit run for each drive.
- Armored cable – When using armored cable:
  - Use six-conductor (3 phases and 3 grounds), type MC continuous corrugated aluminium armor cable with symmetrical grounds.
  - Armored motor cable can share a cable tray with input power cables, but not with control cables.
- Shielded cable – For shielded cable details, see section *Motor cable requirements for CE & C-Tick compliance* on page *287*.

Grounding

See section *Ground connections* on page *279*.

For CE compliant installations and installations where EMC emissions must be minimized, see section *Effective motor cable shields* on page *288*.

Drive's motor connection terminals

The drive's motor and input power terminals have the same specifications. See section *Drive's power connection terminals* on page *280*.

Motor cable requirements for CE & C-Tick compliance

The requirements in this section apply for CE or C-Tick compliance.

Minimum requirement (CE & C-Tick)

The motor cable must be a symmetrical three conductor cable with a concentric PE conductor or a four conductor cable with a concentric shield, however, a symmetrical constructed PE conductor is always recommended. The following figure shows the minimum requirement for the motor cable shield (for example, MCMK, Draka NK Cables).

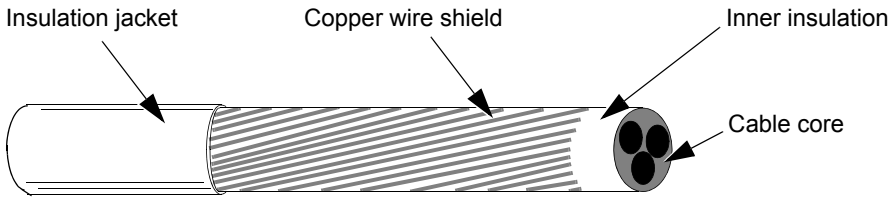

Recommendation for conductor layout

The following figure compares conductor layout features in motor cables.

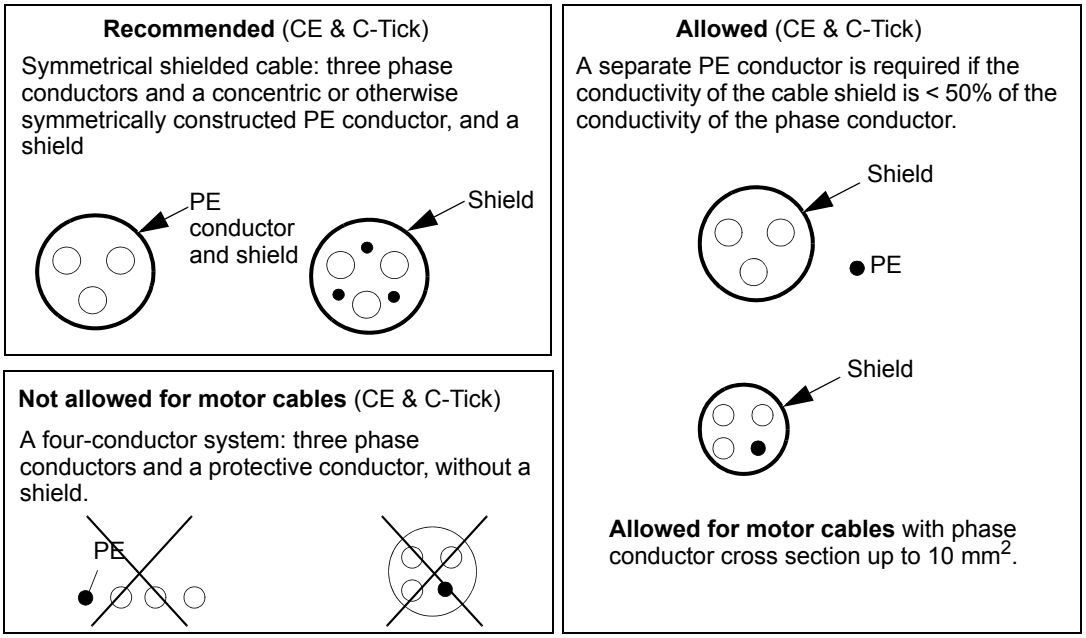

Effective motor cable shields

The general rule for cable shield effectiveness is: the better and tighter the cable's shield, the lower the radiated emission level. The following figure shows an example of an effective construction (for example Ölflex-Servo-FD 780 CP, Lappkabel or MCCMK, NK Cables).

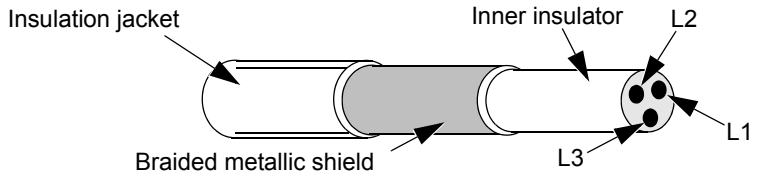

EN 61800-3 compliant motor cables

The most efficient EMC filtering can be achieved by following these rules:

- Motor cables must have an effective shield as described in section *Effective motor cable shields* on page *288*.
- Motor cable shield wires must be twisted together into a bundle (pig-tail) – the bundle length must be less than five times its width – and connected to the terminal marked ⏚ (at the bottom right-hand corner of the drive).
- At the motor end, the motor cable shield must be earthed 360 degrees with an EMC cable gland, or the shield wires must be twisted together into a bundle (pig-tail) not longer than five times its width and connected to the PE terminal of the motor.
- See section *Motor cable length for 400 V drives*, columns "*EMC limits*" on page *284* to check the maximum motor cable lengths and the need for filters for 400 V drives for IEC/EN 61800-3 compliance.

WARNING! Do not use RFI/EMC filters on IT systems.

Brake components

Availability

Braking availability for ACS550 drives, by frame size is:

- R1 and R2 – a built-in brake chopper is standard equipment. Add appropriate resistor, as determined using the following section. Resistors are available from ABB.
- R3…R6 – does not include an internal brake chopper. Connect a chopper and a resistor, or a brake unit to the DC link terminals on the drive. Contact your ABB representative for appropriate parts.

Selecting the braking resistors (frame sizes R1 and R2)

Braking resistor must meet three requirements:

- Resistance must be always higher than the minimum value R_{MIN} defined for the drive type in the following tables. Never use resistance below this value.
- Resistance must be low enough to be able to produce the desired braking torque. To achieve the maximum braking torque (the larger of 150% of heavy duty or 110% of nominal duty), the resistance must not exceed R_{MAX}. If maximum braking torque is not necessary, resistor values can exceed R_{MAX}.
- The resistor power rating must be high enough to dissipate the braking power. This requirement involves many factors:
  - the maximum continuous power rating for the resistor(s)
  - the rate at which the resistor changes temperature (resistor thermal time constant)
  - maximum braking time ON – If the regeneration (braking) power is larger than the resistor rated power, there is a limit to the ON time, or the resistor overheats before the OFF period begins.
  - minimum braking time OFF – If the regeneration (braking) power is larger than the resistor rated power, the OFF time must be large enough for the resistor to cool between ON periods.

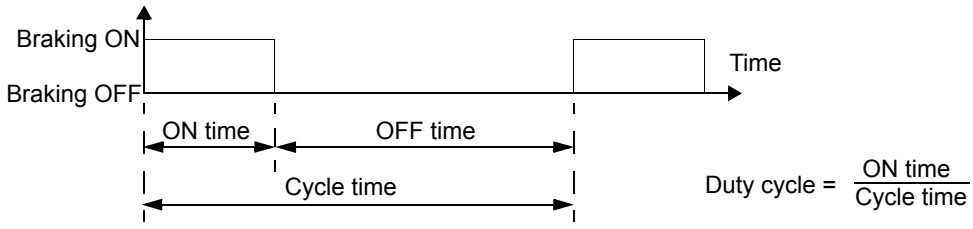

  - the peak braking power requirement
  - type of braking (deceleration to zero vs. overhauling load) – During deceleration to zero, the generated power steadily decreases, averaging half of the peak power. For an overhauling load, the braking is countering an external force (gravity for example) and the braking power is constant. The total heat generated from an overhauling load is double the heat generated from deceleration to zero speed (for the same peak torque and ON time).

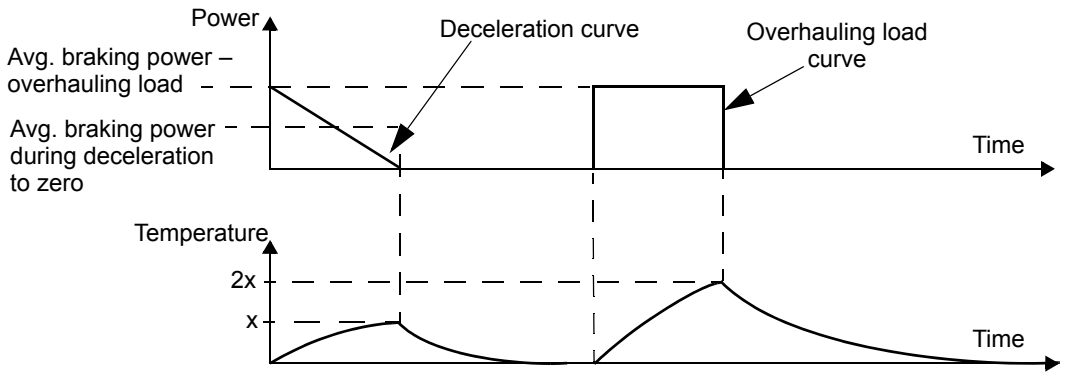

The many variables in the last requirement above are most easily dealt with using the following tables.

- First, determine your maximum braking time ON (ON_{MAX}), minimum braking time OFF (OFF_{MIN}) and load type (deceleration or overhauling load).
- Calculate duty cycle:

$$\text{Duty cycle} = \frac{ON_{MAX}}{(ON_{MAX} + OFF_{MIN})} \cdot 100\%$$

- In the appropriate table, find the column that best matches your data:
  - $ON_{MAX} \leq$ column specification and
  - Duty cycle $\leq$ column specification
- Find the row that matches your drive.
- The minimum power rating for deceleration to zero is the value in the selected row/column.
- For overhauling loads, double the rating in the selected row/column, or use the "Continuous ON" column.

208…240 V drives

Type ACS550-01/U1- see below	Resistance		Resistor[1] minimum continuous power rating				
			Deceleration-to-zero rating				P_{rcont} Continuous ON > 60 s ON > 25% Duty
	R_{MAX}	R_{MIN}	P_{r3} ≤ 3 s ON ≥ 27 s OFF ≤ 10% Duty	P_{r10} ≤ 10 s ON ≥ 50 s OFF ≤ 17% Duty	P_{r30} ≤ 30 s ON ≥ 180 s OFF ≤ 14% Duty	P_{r60} ≤ 60 s ON ≥ 180 s OFF ≤ 25% Duty	
	ohm	ohm	W	W	W	W	W
Three-phase supply voltage, **208…240 V**							
-04A6-2	234	80	45	80	120	200	1100
-06A6-2	160	80	65	120	175	280	1500
-07A5-2	117	44	85	160	235	390	2200
-012A-2	80	44	125	235	345	570	3000
-017A-2	48	44	210	390	575	950	4000
-024A-2	32	30	315	590	860	1425	5500
-031A-2	23	22	430	800	1175	1940	7500

[1] Resistor time constant specification must be ≥ 85 seconds.

380…480 V drives

Type ACS550-01/U1- see below	Resistance		Resistor[1] minimum continuous power rating				
			Deceleration-to-zero rating				P_{rcont} Continuous ON > 60 s ON > 25% Duty
	R_{MAX}	R_{MIN}	P_{r3} ≤ 3 s ON ≥ 27 s OFF ≤ 10% Duty	P_{r10} ≤ 10 s ON ≥ 50 s OFF ≤ 17% Duty	P_{r30} ≤ 30 s ON ≥ 180 s OFF ≤ 14% Duty	P_{r60} ≤ 60 s ON ≥ 180 s OFF ≤ 25% Duty	
	ohm	ohm	W	W	W	W	W
Three-phase supply voltage, **380…480 V**							
-03A3-4	641	120	65	120	175	285	1100
-04A1-4	470	120	90	160	235	390	1500
-05A4-4	320	120	125	235	345	570	2200
-06A9-4	235	80	170	320	470	775	3000
-08A8-4	192	80	210	400	575	950	4000
-012A-4	128	80	315	590	860	1425	5500
-015A-4	94	63	425	800	1175	1950	7500
-023A-4	64	63	625	1175	1725	2850	11000

[1] Resistor time constant specification must be ≥ 85 seconds.

500…600 V drives

Type ACS550-U1- see below	Resistance		Resistor[1] minimum continuous power rating				
			Deceleration-to-zero rating				P_{rcont} Continuous ON > 60 s ON > 25% Duty
	R_{MAX}	R_{MIN}	P_{r3} ≤ 3 s ON ≥ 27 s OFF ≤ 10% Duty	P_{r10} ≤ 10 s ON ≥ 50 s OFF ≤ 17% Duty	P_{r30} ≤ 30 s ON ≥ 180 s OFF ≤ 14% Duty	P_{r60} ≤ 60 s ON ≥ 180 s OFF ≤ 25% Duty	
	ohm	ohm	W	W	W	W	W
Three-phase supply voltage, **500…600 V**							
-02A7-6	548	80	93	175	257	425	1462
-03A9-6	373	80	137	257	377	624	2144
-06A1-6	224	80	228	429	629	1040	3573
-09A0-6	149	80	342	643	943	1560	5359
-011A-6	110	60	467	877	1286	2127	7308
-017A-6	75	60	685	1286	1886	3119	10718

[1] Resistor time constant specification must be ≥ 85 seconds.

WARNING! Never use a brake resistor with a resistance below the minimum value specified for the particular drive. The drive and the internal chopper are not able to handle the overcurrent caused by the low resistance.

Symbols

R_{MIN} – Minimum allowed resistance of the braking resistor.

R_{MAX} – Maximum resistance allowed if maximum braking torque is necessary.

***P*$_{rx}$** – Duty-cycle based resistor power rating in deceleration braking, where "x" is ON_{MAX} time.

Installing and wiring resistors

All resistors must be installed outside the drive module in a place where they can dissipate heat.

WARNING! The surface temperature of the resistor is very high, and air flowing from the resistor is very hot. Materials near the brake resistor must be non-flammable. Provide protection from accidental contact with the resistor.

To ensure that the input fuses protect the resistor cable, use resistor cables with the same rating as used for the power input to the drive.

The maximum length of the resistor cable(s) is 10 m (33 ft). See section *Power connection diagrams* on page *21* for the resistor cable connection points.

Mandatory circuit protection

The following setup is essential for safety – it interrupts the main supply in fault situations involving chopper shorts:

- Equip the drive with a main contactor.
- Wire the contactor so that it opens if the resistor thermal switch opens (an overheated resistor opens the contactor).

Below is a simple wiring diagram example.

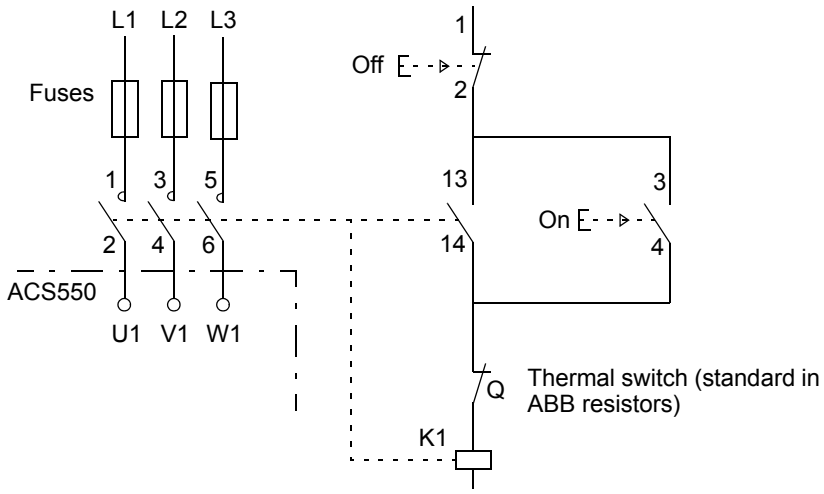

Parameter set-up

To enable dynamic braking, switch off the drive's overvoltage control [Set parameter 2005 = 0 (DISABLE)].

Control connections

Control connection specifications

Control connection specifications	
Analog inputs and outputs	See section *Control terminals table* on page *24*.
Digital inputs	Digital input impedance 1.5 kohm. Maximum voltage for digital inputs is 30 V.
Relays (digital outputs)	• Max. contact voltage: 30 V DC, 250 V AC • Max. contact current / power: 6 A, 30 V DC; 1500 VA, 250 V AC • Max. continuous current: 2 A rms (cos φ = 1), 1 A rms (cos φ = 0.4) • Minimum load: 500 mW (12 V, 10 mA) • Contact material: Silver-nickel (AgN) • Isolation between relay digital outputs, test voltage: 2.5 kV rms, 1 minute
Cable specifications	See section *Control terminals table* on page *24*.

Control cables

General recommendations

Use multi-core cables with a braided copper wire shield, temperature rated at 60 °C (140 °F) or above:

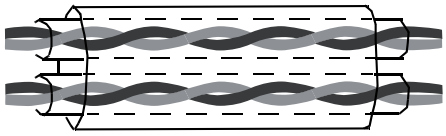

Double shielded
Example: JAMAK by Draka NK Cables

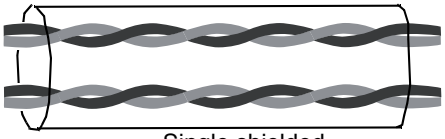

Single shielded
Example: NOMAK by Draka NK Cables

For digital and analog I/O cables, twist the shield together into a bundle (pig-tail) not longer than five times its width and connect it to terminal X1-1 at the drive end. Leave the other end of the cable shield unconnected.

For connecting the shield wires of the RS485 cable, see the instructions (and notes) in section *Mechanical and electrical installation – EFB* on page *200*.

Route control cables to minimize radiation to the cable:

- Route as far away as possible from the input power and motor cables (at least 20 cm [8 in]).
- Where control cables must cross power cables, make sure they are at an angle as near 90° as possible.
- Stay at least 20 cm (8 in) from the sides of the drive.

Use care in mixing signal types on the same cable:

- Do not mix relay-controlled signals using more than 30 V and other control signals in the same cable.
- Run relay-controlled signals as twisted pairs (especially if voltage > 48 V). Relay-controlled signals using less than 48 V can be run in the same cables as digital input signals.

Note: Never mix 24 V DC and 115/230 V AC signals in the same cable.

Analog cables

Recommendations for analog signal runs:

- Use double shielded, twisted pair cable.
- Use one individually shielded pair for each signal.
- Do not use a common return for different analog signals.

Digital cables

Recommendation for digital signal runs: A double shielded cable is the best alternative, but single-shielded, twisted, multi-pair cable is also usable.

Control panel cable

If the control panel is connected to the drive with a cable, use only Category 5 Patch ethernet cable. The maximum length that is tested to meet EMC specifications is 3 m (9.8 ft). Longer cables are susceptible to electromagnetic noise and must be user-tested to verify that EMC requirements are met. Where long runs are required (especially for runs longer than about 12 m [40 ft]), use a RS232/RS485 converter at each end and run RS485 cable.

Drive's control connection terminals

The following table provides specifications for the drive's control terminals

Frame size	Control			
	Maximum wire size [1]		Tightening torque	
	mm^2	AWG	N·m	lb·ft
All	1.5	16	0.4	0.3

[1] Values given for solid wires.
For stranded wires, the maximum size is 1 mm^2.

Efficiency

Approximately 98% at nominal power level.

Cooling

Cooling specifications	
Method	Internal fan, flow direction from bottom to top.
Requirement	Free space above and below the ACS550 drive: 200 mm (8 in). Free space is not required on the drive's sides – ACS550 drives can be mounted side-by-side.

Air flow, 208…240 V drives

The following table lists heat loss and air flow data for 208…240 V drives.

Drive		Heat loss		Air flow	
ACS550-x1-	**Frame size**	**W**	**BTU/hr**	**m^3/h**	**ft^3/min**
-04A6-2	R1	55	189	44	26
-06A6-2	R1	73	249	44	26
-07A5-2	R1	81	276	44	26
-012A-2	R1	118	404	44	26
-017A-2	R1	161	551	44	26
-024A-2	R2	227	776	88	52
-031A-2	R2	285	973	88	52
-046A-2	R3	420	1434	134	79
-059A-2	R3	536	1829	134	79
-075A-2	R4	671	2290	280	165
-088A-2	R4	786	2685	280	165
-114A-2	R4	1014	3463	280	165
-143A-2	R6	1268	4431	405	238
-178A-2	R6	1575	5379	405	238
-221A-2	R6	1952	6666	405	238
-248A-2	R6	2189	7474	405	238

00467918.xls C

Air flow, 380…480 V drives

The following table lists heat loss and air flow data for 380…480 V drives.

Drive		Heat loss		Air flow	
ACS550-x1-	**Frame size**	**W**	**BTU/hr**	**m^3/h**	**ft^3/min**
-03A3-4	R1	40	137	44	26
-04A1-4	R1	52	178	44	26
-05A4-4	R1	73	249	44	26
-06A9-4	R1	97	331	44	26
-08A8-4	R1	127	434	44	26
-012A-4	R1	172	587	44	26
-015A-4	R2	232	792	88	52
-023A-4	R2	337	1151	88	52

Drive		Heat loss		Air flow	
ACS550-x1-	**Frame size**	**W**	**BTU/hr**	**m^3/h**	**ft^3/min**
-031A-4	R3	457	1561	134	79
-038A-4	R3	562	1919	134	79
-045A-4	R3	667	2278	134	79
-059A-4	R4	907	3098	280	165
-072A-4	R4	1120	3825	280	165
-078A-4	R4	1295	4423	250	147
-087A-4	R4	1440	4918	280	165
-097A-4	R4	1440	4918	280	165
-125A-4	R5	1940	6625	350	205
-157A-4	R6	2310	7889	405	238
-180A-4	R6	2810	9597	405	238
-195A-4	R6	3050	10416	405	238
-246A-4	R6	3260	11134	405	238
-290A-4	R6	3850	13125	405	238

00467918.xls C

Air flow, 500…600 V drives

The following table lists heat loss and air flow data for 500…600 V drives.

Drive		Heat loss		Air flow	
ACS550-U1-	**Frame size**	**W**	**BTU/hr**	**m^3/h**	**ft^3/min**
-02A7-6	R2	52	178	88	52
-03A9-6	R2	73	249	88	52
-06A1-6	R2	127	434	88	52
-09A0-6	R2	172	587	88	52
-011A-6	R2	232	792	88	52
-017A-6	R2	337	1151	88	52
-022A-6	R3	457	1561	134	79
-027A-6	R3	562	1919	134	79
-032A-6	R4	667	2278	280	165
-041A-6	R4	907	3098	280	165
-052A-6	R4	1117	3815	280	165
-062A-6	R4	1357	4634	280	165
-077A-6	R6	2310	7889	405	238
-099A-6	R6	2310	7889	405	238
-125A-6	R6	2310	7889	405	238
-144A-6	R6	2310	7889	405	238

00467918.xls C

Dimensions and weights

The dimensions and mass for the ACS550 depend on the frame size and enclosure type. If unsure of the frame size, first, find the "Type" designation on the drive labels (see sections *Type designation* on page *13* and *Drive labels* on page *12*). Then look up that type designation in the rating tables (see chapter *Technical data*, page *271*), to determine the frame size.

Mounting dimensions

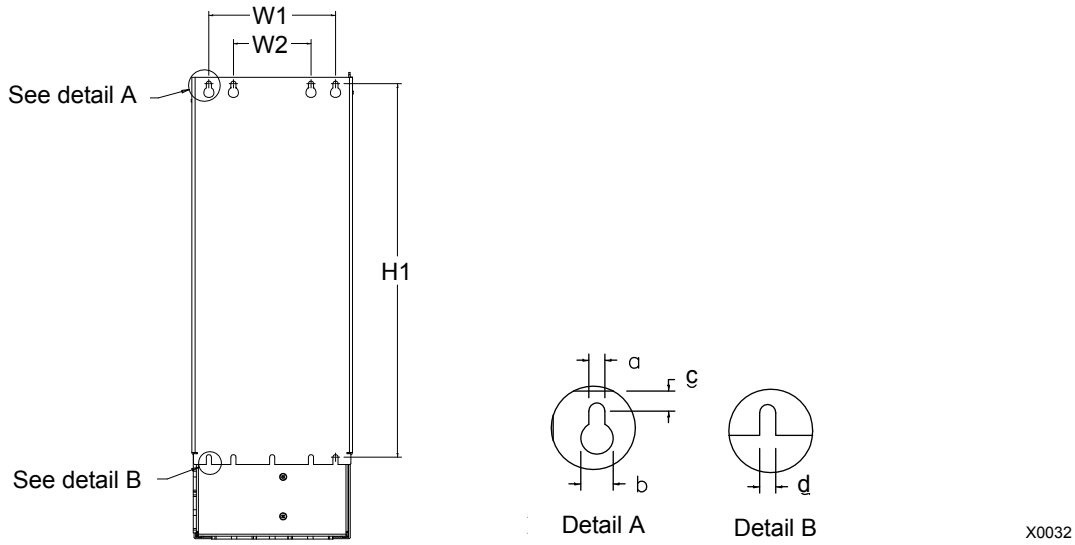

IP21 / UL type 1 and IP54 / UL type 12 – Dimensions for each frame size												
Ref.	**R1**		**R2**		**R3**		**R4**		**R5**		**R6**	
	mm	**in**	**mm**	**in**	**mm**	**in**	**mm**	**in**	**mm**	**in**	**mm**	**in**
W1[1]	98.0	3.9	98.0	3.9	160	6.3	160	6.3	238	9.4	263	10.4
W2[1]	--	--	--	--	98.0	3.9	98.0	3.9	--	--	--	--
H1[1]	318	12.5	418	16.4	473	18.6	578	22.8	588	23.2	675	26.6
a	5.5	0.2	5.5	0.2	6.5	0.25	6.5	0.25	6.5	0.25	9.0	0.35
b	10.0	0.4	10.0	0.4	13.0	0.5	13.0	0.5	14.0	0.55	18.0	0.71
c	5.5	0.2	5.5	0.2	8.0	0.3	8.0	0.3	8.5	0.3	8.5	0.3
d	5.5	0.2	5.5	0.2	6.5	0.25	6.5	0.25	6.5	0.25	9.0	0.35

[1] Center to center dimension.

Outside dimensions

Drives with IP21 / UL type 1 enclosures

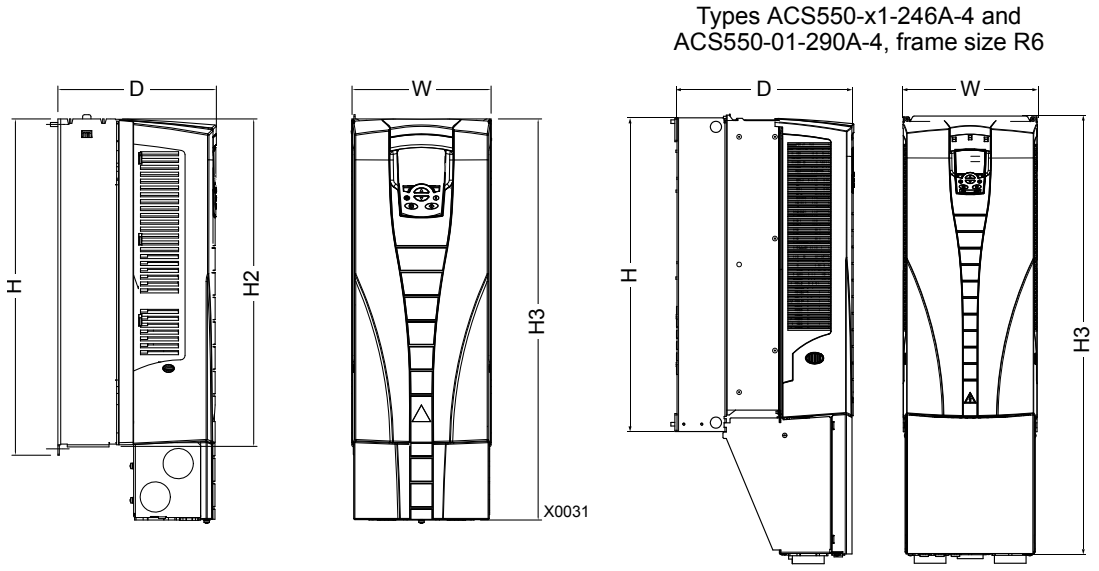

IP21 / UL type 1 – dimensions for each frame size												
Ref.	**R1**		**R2**		**R3**		**R4**		**R5**		**R6**	
	mm	**in**	**mm**	**in**	**mm**	**in**	**mm**	**in**	**mm**	**in**	**mm**	**in**
W	125	4.9	125	4.9	203	8.0	203	8.0	265	10.4	302	11.9
H	330	13.0	430	16.9	490	19.3	596	23.5	602	23.7	700	27.6
H2	315	12.4	415	16.3	478	18.8	583	23.0	578	22.8	698	27.5
H3	369	14.5	469	18.5	583	23.0	689	27.1	736	29.0	888[1]	35.0[1]
D	212	8.3	222	8.7	231	9.1	262	10.3	286	11.3	400	15.8

00467918.xls C

1. ACS550-x1-246A-4 and ACS550-01-290A-4: 979 mm / 38.5 in.

Drives with IP54 / UL type 12 enclosures

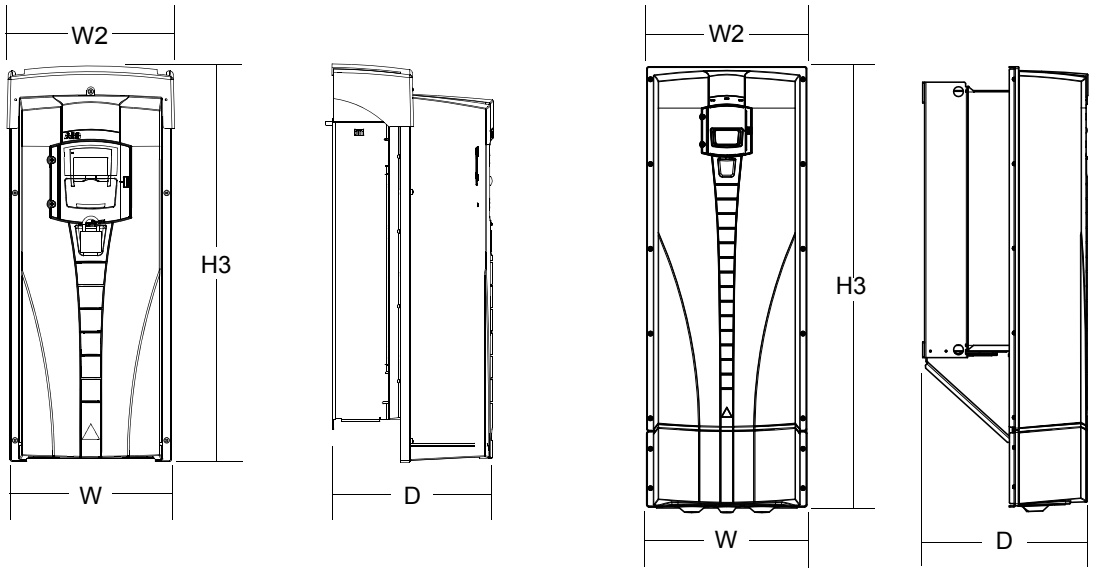

IP54 / UL type 12 – Dimensions for each frame size												
Ref.	**R1**		**R2**		**R3**		**R4**		**R5**		**R6**[2]	
	mm	**in**	**mm**	**in**	**mm**	**in**	**mm**	**in**	**mm**	**in**	**mm**	**in**
W	213	8.4	213	8.4	257	10.1	257	10.1	369	14.5	410	16.1
W2	222	8.8	222	8.8	267	10.5	267	10.5	369	14.5	410	16.1
H3	461	18.2	561	22.1	629	24.8	760	29.9	775	30.5	924[1]	36.4[1]
D	234	9.2	245	9.7	254	10.0	284	11.2	309	12.2	423	16.7

00467918.xls C

1. ACS550-01-290A-4: 1119 mm / 44.1 in.
2. UL type 12 not available for ACS550-01-290A-4.

Weight

The following table lists typical maximum weights for each frame size. Variations within each frame size (due to components associated with voltage/current ratings and options) are minor.

Enclosure	Weight											
	R1		**R2**		**R3**		**R4**		**R5**		**R6**	
	kg	**lb**	**kg**	**lb**	**kg**	**lb**	**kg**	**lb**	**kg**	**lb**	**kg**	**lb**
IP21 / UL type 1	6.5	14.3	9.0	19.8	16	35	24	53	34	75	69[1]	152[1]
IP54 / UL type 12	8.0	17.6	11.0	24.3	17.0	37.5	26.0	57.3	42.0	93.0	86.0[2]	190[2]

00467918.xls C

1. ACS550-x1-246A-4, IP21 / UL type 1: 70 kg / 154 lb
   ACS550-01-290A-4, IP21 / UL type 1: 80 kg / 176 lb.
2. ACS550-x1-246A-4, IP54 / UL type 12: 80 kg / 176 lb
   ACS550-01-290A-4, IP54: 90 kg / 198 lb (UL type 12 not available).

Degrees of protection

Available enclosures:

- IP21 / UL type 1 enclosure. The site must be free of airborne dust, corrosive gases or liquids, and conductive contaminants such as condensation, carbon dust and metallic particles.
- IP54 / UL type 12 enclosure. This enclosure provides protection from airborne dust and light sprays or splashing water from all directions.

  Note: UL type 12 enclosure is not available for type ACS550-01-290A-4.

Compared to the IP21 / UL type 1 enclosure, the IP54 / UL type 12 enclosure has:

- the same internal plastic shell as the IP21 enclosure
- a different outer plastic cover
- an additional internal fan to improve cooling
- larger dimensions
- the same rating (does not require a derating).

Ambient conditions

The following table lists the ACS550 environmental requirements.

Ambient environment requirements		
	Installation site	**Storage and transportation in the protective package**
Altitude	• 0…1000 m (0…3 300 ft) • 1000…2000 m (3 300…6 600 ft) if P_N and I_{2N} derated 1% every 100 m above 1000 m (300 ft above 3 300 ft)	
Ambient temperature	• Min. -15 °C (5 °F) – no frost allowed • Max. (fsw = 1 or 4) 40 °C (104 °F); 50 °C (122 °F) if P_N and I_{2N} derated to 90% • Max. (fsw = 8) 40 °C (104 °F) if P_N and I_{2N} derated to 80% • Max. (fsw = 12) 30 °C (86 °F) if P_N and I_{2N} derated to 65% (to 50% for 600 V, R4 frame sizes, that is for ACS550-U1-032A-6 … ACS550-U1-062A-6)	-40…70 °C (-40…158 °F)
Relative humidity	5…95%, no condensation allowed	

Ambient environment requirements		
	Installation site	**Storage and transportation in the protective package**
Contamination levels (IEC 721-3-3)	• No conductive dust allowed. • The ACS550 should be installed in clean air according to enclosure classification. • Cooling air must be clean, free from corrosive materials and free from electrically conductive dust. • Chemical gases: Class 3C2 • Solid particles: Class 3S2	Storage • No conductive dust allowed. • Chemical gases: Class 1C2 • Solid particles: Class 1S2 Transportation • No conductive dust allowed. • Chemical gases: Class 2C2 • Solid particles: Class 2S2

The following table lists the standard stress testing that the ACS550 passes.

Stress tests		
	Without shipping package	**Inside shipping package**
Sinusoidal vibration	Mechanical conditions: In accordance with IEC 60721-3-3, Class 3M4 • 2…9 Hz 3.0 mm (0.12 in) • 9…200 Hz 10 m/s^2 (33 ft/s^2)	In accordance with ISTA 1A and 1B specifications.
Shock	Not allowed	In accordance with IEC 68-2-29: max. 100 m/s^2 (330 ft/s^2), 11ms
Free fall	Not allowed	• 76 cm (30 in), frame size R1 • 61cm (24 in), frame size R2 • 46 cm (18 in), frame size R3 • 31 cm (12 in), frame size R4 • 25 cm (10 in), frame size R5 • 15 cm (6 in), frame size R6

Materials

Material specifications	
Drive enclosure	• PC/ABS 2.5 mm, color NCS 1502-Y or NCS 7000-N • Hot-dip zinc coated steel sheet 1.5…2 mm, thickness of coating 20 micrometers. If the surface is painted, the total thickness of the coating (zinc and paint) is 80…100 micrometers. • Cast aluminium AlSi • Extruded aluminium AlSi
Package	Corrugated board, expanded polystyrene, plywood, raw wood (heat dried). Package wrap consists of one or more of the following: PE-LD plastic wrap, PP or steel bands.

Material specifications	
Disposal	The drive contains raw materials that should be recycled to preserve energy and natural resources. The package materials are environmentally compatible and recyclable. All metal parts can be recycled. The plastic parts can either be recycled or burned under controlled circumstances, according to local regulations. Most recyclable parts are marked with recycling marks. If recycling is not feasible, all parts excluding electrolytic capacitors and printed circuit boards can be landfilled. The DC capacitors contain electrolyte and, if the drive is not provided with the RoHS marking, the printed circuit boards contain lead, both of which are classified as hazardous waste within the EU. They must be removed and handled according to local regulations. For further information on environmental aspects and more detailed recycling instructions, please contact your local ABB distributor.

Applicable standards

Drive compliance with the following standards is identified by the standard "marks" on the type designation label.

Mark	Applicable standards	
CE	EN 50178 (1997)	Electronic equipment for use in power installations
	IEC/EN 60204-1 (2005)	Safety of machinery. Electrical equipment of machines. Part 1: General requirements. *Provisions for compliance:* The final assembler of the machine is responsible for installing: • an emergency-stop device • a supply disconnecting device.
	IEC/EN 60529 (2004)	Degrees of protection provided by enclosures (IP code)
	IEC 60664-1 (2002)	Insulation coordination for equipment within low-voltage systems. Part 1: Principles, requirements and tests
	IEC/EN 61800-5-1 (2003)	Adjustable speed electrical power drive systems. Part 5-1: Safety requirements. Electrical, thermal and energy
	IEC/EN 61800-3 (2004)	Adjustable speed electrical power drive systems. Part 3: EMC requirements and specific test methods
	IEC/EN 61000-3-12	Electromagnetic compatibility (EMC). Part 3-12: Limits - Limits for harmonic currents produced by equipment connected to public low-voltage systems with input current > 16 A and = 75 A per phase
	IEC/EN 61800-3 (2004)	Adjustable speed electrical power drive systems. Part 3: EMC requirements and specific test methods
c UL us LISTED	UL 508C	UL Standard for Safety, Power Conversion Equipment, third edition
	C22.2 No. 14	CSA Standard for Industrial Control Equipment (for ACS550-U1 drives only)

CE marking

A CE mark is attached to the drive to verify that the drive follows the provisions of the European Low Voltage and EMC Directives.

Note: The 600 V ACS550-U1 drives are not CE approved.

Compliance with the EMC Directive

The Directive defines the requirements for immunity and emissions of electrical equipment used within the European Union. The EMC product standard (IEC/EN 61800-3 [2004]) covers requirements stated for drives.

Compliance with IEC/EN 61800-3 (2004)

See page 305.

C-Tick marking

The drive carries C-Tick marking.

C-Tick marking is required in Australia and New Zealand. A C-Tick mark is attached to the drive to verify compliance with the relevant standard (IEC 61800-3 (2004) – Adjustable speed electrical power drive systems – Part 3: EMC product standard including specific test methods), mandated by the Trans-Tasman Electromagnetic Compatibility Scheme.

The Trans-Tasman Electromagnetic Compatibility Scheme (EMCS) was introduced by the Australian Communication Authority (ACA) and the Radio Spectrum Management Group (RSM) of the New Zealand Ministry of Economic Development (NZMED) in November 2001. The aim of the scheme is to protect the radio frequency spectrum by introducing technical limits for emission from electrical/ electronic products.

Compliance with IEC/EN 61800-3 (2004)

See page *305*.

UL/CSA markings

An UL mark is attached to ACS550 drives to verify that the drive follows the provisions of UL 508C.

A CSA mark is attached to ACS550-**U1** type drives to verify that the drive follows the provisions of C22.2 NO. 14.

The ACS550 is suitable for use in a circuit capable of delivering not more than 100 kA RMS symmetrical amperes, 600 V maximum. The ampere rating is based on tests done according to UL 508.

Branch circuit protection must be provided in accordance with local codes.

The ACS550 has an electronic motor protection feature that complies with the requirements of UL 508C and, for ACS550-U1, C22.2 No. 14. When this feature is selected and properly adjusted, additional overload protection is not required unless more than one motor is connected to the drive or unless additional protection is required by applicable safety regulations. See parameters 3005 (MOT THERM PROT) and 3006 (MOT THERM RATE).

The drives are to be used in a controlled environment. See section *Ambient conditions* on page *300* for specific limits.

Note: For open type enclosures, i.e. drives without the conduit box and/or cover for IP21 / UL type 1 drives, or without the conduit plate and/or hood for IP54 / UL type 12 drives, the drive must be mounted inside an enclosure in accordance with National Electric Code and local electrical codes.

Brake choppers, when applied with appropriately sized brake resistors, will allow the drive to dissipate regenerative energy (normally associated with quickly decelerating a motor). Frame sizes R1 and R2 have a built-in brake chopper as standard equipment. For frame sizes R3…R6, contact your ABB representative for appropriate parts. See section *Brake components* on page *289*.

IEC/EN 61800-3 (2004) Definitions

EMC stands for **E**lectro**m**agnetic **C**ompatibility. It is the ability of electrical/electronic equipment to operate without problems within an electromagnetic environment. Likewise, the equipment must not disturb or interfere with any other product or system within its locality.

First environment includes establishments connected to a low-voltage network which supplies buildings used for domestic purposes.

Second environment includes establishments connected to a network not directly supplying domestic premises.

Drive of category C2: drive of rated voltage less than 1000 V and intended to be installed and commissioned only by a professional when used in the first environment.

Note: A professional is a person or organisation having necessary skills in installing and/or commissioning power drive systems, including their EMC aspects.

Category C2 has the same EMC emission limits as the earlier class first environment restricted distribution. EMC standard IEC/EN 61800-3 does not any more restrict the distribution of the drive, but the using, installation and commissioning are defined.

Drive of category C3: drive of rated voltage less than 1000 V, intended for use in the second environment and not intended for use in the first environment.

Category C3 has the same EMC emission limits as the earlier class second environment unrestricted distribution.

Compliance with the IEC/EN 61800-3 (2004)

The immunity performance of the drive complies with the demands of IEC/EN 61800-3, category C2 (see page *305* for IEC/EN 61800-3 definitions). The emission limits of IEC/EN 61800-3 are complied with the provisions described below.

First environment (drives of category C2)

1. The internal EMC filter is connected.
2. The motor and control cables are selected as specified in this manual.
3. The drive is installed according to the instructions given in this manual.
4. The motor cable length does not exceed the allowed maximum length specified in section *Motor cable length for 400 V drives* on page *284* for the frame size and switching frequency in use.

   WARNING! In a domestic environment, this product may cause radio inference, in which case supplementary mitigation measures may be required.

Second environment (drives of category C3)

1. The internal EMC filter is connected.
2. The motor and control cables are selected as specified in this manual.
3. The drive is installed according to the instructions given in this manual.

4. The motor cable length does not exceed the allowed maximum length specified in section *Motor cable length for 400 V drives* on page *284* for the frame size and switching frequency in use.

   WARNING! A drive of category C3 is not intended to be used on a low-voltage public network which supplies domestic premises. Radio frequency interference is expected if the drive is used on such a network.

   Note: It is not allowed to install a drive with the internal EMC filter connected on IT (ungrounded) systems. The supply network becomes connected to ground potential through the EMC filter capacitors, which may cause danger or damage the drive.

   Note: It is not allowed to install a drive with the internal EMC filter connected to a corner grounded TN system as this would damage the drive.

Product protection in the USA

This product is protected by one or more of the following US patents:

4,920,306	5,301,085	5,463,302	5,521,483	5,532,568	5,589,754
5,612,604	5,654,624	5,799,805	5,940,286	5,942,874	5,952,613
6,094,364	6,147,887	6,175,256	6,184,740	6,195,274	6,229,356
6,252,436	6,265,724	6,305,464	6,313,599	6,316,896	6,335,607
6,370,049	6,396,236	6,448,735	6,498,452	6,552,510	6,597,148
6,600,290	6,741,059	6,774,758	6,844,794	6,856,502	6,859,374
6,922,883	6,940,253	6,934,169	6,956,352	6,958,923	6,967,453
6,972,976	6,977,449	6,984,958	6,985,371	6,992,908	6,999,329
7,023,160	7,034,510	7,036,223	7,045,987	7,057,908	7,059,390
7,067,997	7,082,374	7,084,604	7,098,623	7,102,325	7,109,780
7,164,562	7,176,779	7,190,599	7,215,099	7,221,152	7,227,325
7,245,197	7,250,739	7,262,577	7,271,505	7,274,573	7,279,802
7,280,938	7,330,095	7,349,814	7,352,220	7,365,622	7,372,696
7,388,765	D503,931	D510,319	D510,320	D511,137	D511,150
D512,026	D512,696	D521,466	D541,743S	D541,744S	D541,745S
D548,182S	D548,183S				

Other patents pending.

Index

Numerics

0xxxx register
- EFB function codes . . . 214
- EFB mapping . . . 212

1xxxx register
- EFB function codes . . . 215
- EFB mapping . . . 214

2-wire sensor/transmitter, connection example . . 82
3-wire macro . . . 75
3-wire sensor/transmitter, connection example . . 82
3xxxx register
- EFB function codes . . . 215
- EFB mapping . . . 215

4xxxx register
- EFB function codes . . . 217
- EFB mapping . . . 215

A

ABB
- document library . . . 319
- feedback on ABB manuals . . . 319
- product and service inquiries . . . 319
- product training . . . 319
- standard (default) macro . . . 74

acceleration
- /deceleration, parameter group . . . 135
- at aux. stop (PFC), parameter . . . 197
- compensation, parameter . . . 138
- ramp select, parameter . . . 135
- ramp shape, parameter . . . 135
- ramp time (PFC), parameter . . . 197
- ramp zero select, parameter . . . 136
- time, parameter . . . 135

activate (external PID), parameter . . . 174
actual input (PID), parameters . . . 170
actual max. (PID), parameters . . . 170
actual min. (PID), parameters . . . 170
actual values
- mapping, FBA, generic profile . . . 251
- scaling, EFB comm . . . 207
- scaling, FBA comm . . . 238
- scaling, FBA, ABB drives profile . . . 249
- scaling, FBA, generic profile . . . 251

alarm
- codes . . . 261
- codes (Basic Control Panel) . . . 263
- display enable, parameter . . . 128
- listing . . . 261
- words, data parameters . . . 109

alternate macro . . . 76
altitude
- derating . . . 274
- environment limit . . . 300
- shipping limit . . . 300

ambient conditions . . . 300
ambient temperature
- derating . . . 274
- environment limit . . . 300
- shipping limit . . . 300

amplitude logging
- see load analyzer

analog cable, requirements . . . 294
analog I/O
- connections . . . 24
- specifications . . . 24

analog input
- parameter group . . . 119
- data parameter . . . 105
- fault limit, parameters . . . 146
- filter, parameters . . . 119
- less than min. auto. reset, parameter . . . 148
- less than min., fault parameter . . . 144
- loss, fault codes . . . 255
- maximum, parameters . . . 119
- minimum, parameters . . . 119

analog output
- parameter group . . . 123
- content max., parameters . . . 123
- content min., parameters . . . 123
- current max., parameters . . . 123
- current min., parameters . . . 123
- data content, parameters . . . 123
- data parameters . . . 105
- filter, parameters . . . 123

analyzer, load
- see load analyzer

angle
- mechanical, data parameter . . . 106

application block output, data parameter . . . 104
application macro, parameter . . . 102
application macros
- see macros

arrow (Assistant Control Panel) . . . 45
assistant (Assistant Control Panel)
- start-up . . . 53
- tasks . . . 54

Assistant Control Panel
- see control panel (Assistant)

assistants mode (Assistant Control Panel) . . . 53
autochange
- interval, parameter . . . 190
- level, parameter . . . 191
- overview . . . 191
- starting order counter . . . 191

automatic reset
- see reset, automatic

auxiliary motor
- see motor, auxiliary

B

backing up parameters
- Assistant Control Panel 60
- Basic Control Panel 71

Basic Control Panel
- see control panel (Basic)

battery (Assistant Control Panel). 269
baud rate (RS-232), parameter 180
braking
- components 289
- protection from overheated resistor 292
- resistor heat dissipation 292
- selecting brake choppers/resistors 289
- wiring 292

break point frequency, fault parameter 145
buffer overruns (count), parameter 180

C

cable requirements
- control 293
- grounding 279
- input power 278
- motor. 286

capacitor
- reforming. 269
- replacement 269

category (IEC/EN 61800-3 definition)
- C2 305
- C3 305

CB
- see control board

CE marking 303
changed parameters (Assistant Control Panel). . 56
chopper
- see braking

clock
- see time and date setting (Assistant Control Panel)

CO2 conversion factor
- see energy saving

communication
- see EFB (embedded fieldbus)
- see EFB, drive parameters
- see FBA (fieldbus adapter)
- see FBA, drive parameters

conduit kit 19
config file
- CPI firmware revision, parameter 178
- fault code 257
- id revision, parameter 178
- revision, parameter 178

connections
- control 24
- diagram. 24
- EFB comm 200
- FBA module 234
- X1 24

constant speed
- see speed, constant

construction code 13

contamination levels
- environment limit 301
- shipping limit 301

contrast, control panel (Assistant) 50
control
- connection specifications 293
- location, data parameter 104
- terminal specifications 294
- through I/O interface 40

control board
- overtemperature, fault code 258
- overtemperature, fault parameter. 147
- temperature, data parameter 106

control cable
- connections 24
- requirements 293

control panel 43
- cable requirements. 294
- comm error, fault parameter. 144
- display bar-graph 152, 153
- display decimal point (form), parameters . . . 152
- display max., parameters 153
- display min., parameters 153
- display process variables, parameter group 152
- display selection, parameters. 152
- display units, parameters 153
- maintenance. 269
- manual compatibility. 43
- parameter lock, parameter 125
- pass code, parameter 125
- reference control, parameter 113
- signal max., parameters. 152
- signal min., parameters 152

control panel (Assistant) 44
- arrow 45
- assistants mode 53
- battery 269
- changed parameters mode 56
- direction of rotation. 45, 49
- display contrast 50
- fault logger mode 57
- fault mode 45, 253, 254
- help 47
- how to do common tasks 46
- I/O settings mode 63
- main menu 46
- operation 45
- output mode 49
- overview 44
- parameter backup mode 60
- parameters mode 51
- soft keys 44
- start/stop 48
- status line (LOC/REM, arrow) 45
- time and date mode 58

control panel (Basic) 64
alarm codes. 263
copy mode. 71
direction of rotation 64, 66
fault mode 65, 253, 254
how to do common tasks 65
main menu 65
operation 65
output mode 67
overview 64
parameter mode 69
reference mode 68
start/stop 66
control word
ABB drives, FBA, description 242
EFB, description 219
FBA 232
FBA generic profile 250
cooling
air flow. 295
fan maintenance triggers. 143
heat loss 295
space requirement 295
copy mode (Basic Control Panel) 71
corner grounded TN system 279
warning about filters 6
warning about screws at EM1, EM3 21
warning about screws at F1, F2 22
correction source (PID), parameter 175
cover
remove 17
replace 32
cover, top, see hood
CRC errors (count), parameter 180
crimp-on ring lugs 281
critical speeds (avoiding)
parameter group 140
high, parameters 140
low, parameters. 140
select, parameter 140
C-Tick marking 303
current
at fault, history parameter 110
data parameter 104
max. limit, parameter. 129
measurement, fault code. 256
rating code 13

D

date
see time and date setting (Assistant Control Panel)
DC
brake time, parameter 133
bus voltage, data parameter 104
current ref., parameter 133
magnetizing time, parameter. 132
overvoltage, fault code 255
undervoltage, fault code 255
voltage stabilizer, parameter 142
deceleration
parameter group. 135
at aux. start (PFC), parameter 197
emergency time, parameter 136
ramp select, parameter 135
ramp shape, parameter 135
ramp time (PFC), parameter 197
ramp zero select, parameter 136
time, parameter 135
default values
listing for macros 84
listing for parameters 87
derating
adjustment example 274
altitude 274
single phase supply 274
switching frequency 274
temperature 274
derivation time (PID), parameter. 167
derivation time, parameter 137
device overtemperature, fault code. 255
diagnostics 253
EFB comm 208
FBA comm 239
digital cable requirements 294
digital input
at fault, history parameters. 110
connections 24
specifications 25
status, data parameter 105
digital output
connections 24
specifications 293
dimensions
drive, mounting. 297
drive, outside 298
DIP switches 21, 24
direction control, parameter 112
direction of rotation
Assistant Control Panel 45, 49
Basic Control Panel 64, 66
display format (PID), parameter 167
disposal. 302
document library 319
download parameter sets
application 60
full set 60
user sets. 60
drive
EFB comm installation 200
FBA module installation 234
id, fault code 257
mounting. 18
mounting dimensions 297
outside dimensions. 298
rating, parameter 151
temperature, data parameter 104
weight 299
drive on time, data parameters 106

E

earth fault
- fault code . . . 256
- parameter . . . 146

earthing
- see ground

EFB (embedded fieldbus) . . . 199
- actual value scaling . . . 207
- actual values . . . 207
- analog output control, activate . . . 205
- comm fault response . . . 206
- configuration . . . 202
- configure for loss of communication . . . 209
- control interface . . . 199
- control word . . . 219
- diagnostics . . . 208
- drive control of functions, activate . . . 203
- exception codes . . . 218
- fault code 28 . . . 210
- fault code 31 . . . 210
- fault code 32 . . . 210
- fault code 33 . . . 210
- fault tracing parameters . . . 208
- fault, duplicate stations . . . 209
- fault, intermittent off-line . . . 210
- fault, no master station on line . . . 209
- fault, swapped wires . . . 209
- feedback from drive . . . 207
- input reference sel., activate . . . 204
- installation . . . 200
- misc. drive control, activate . . . 204
- modbus actual values . . . 218
- PID control setpoint source, activate . . . 206
- planning . . . 200
- profiles . . . 212
- reference scaling, ABB drives profile . . . 228
- relay output control, activate . . . 205
- set-up . . . 201
- start/stop/direction control, activate . . . 203
- state diagram . . . 227
- status word . . . 222
- termination . . . 201

EFB, drive parameters . . . 181
- protocol, parameter group . . . 181
- baud rate, parameter . . . 181
- command words, data parameters . . . 108
- config file, fault code . . . 257
- control profile, parameter . . . 181
- CRC errors (count), parameter . . . 181
- fault codes . . . 257
- fault function, parameter . . . 146
- fault time, parameter . . . 146
- ok messages (count), parameter . . . 181
- parameters . . . 181, 182
- parity, parameter . . . 181
- protocol id, parameter . . . 181
- protocol select, parameter . . . 198
- relay output word, data parameter . . . 105
- station id, parameter . . . 181
- status words, data parameters . . . 108
- status, parameter . . . 181
- UART errors (count), parameter . . . 181
- values, data parameter . . . 105

efficiency . . . 294

ELV (Extra Low Voltage) . . . 25

EM1 and EM3 screws
- location . . . 21
- on corner grounded TN system . . . 23
- on IT systems . . . 23
- on symmetrically grounded TN systems . . . 23
- warning . . . 21, 279, 280

embedded fieldbus
- see EFB
- see EFB, drive parameters

EMC
- CE marking . . . 303
- C-Tick marking . . . 303
- motor cable requirements . . . 287

EMC filter, external . . . 280

EMC filter, internal . . . 6, 23, 279, 280, 305, 306

emergency
- deceleration time, parameter . . . 136
- stop devices . . . 277
- stop select, parameter . . . 133

enclosure
- protection class code . . . 13
- types . . . 300

encoder
- parameter group . . . 177
- enable, parameter . . . 177
- error, fault code . . . 257
- fault, parameter . . . 177
- number of pulses, parameter . . . 177
- position reset enable, parameter . . . 177
- zero pulse detected, data parameter . . . 106
- zero pulse enable, parameter . . . 177

energy saving
- parameter group . . . 176
- CO2 conversion factor, parameter . . . 176
- energy price, parameter . . . 176
- energy reset, parameter . . . 176
- pump power, parameter . . . 176
- saved amount 1, data parameter . . . 107
- saved amount 2, data parameter . . . 107
- saved CO2, data parameter . . . 107
- saved kWh, data parameter . . . 107
- saved MWh, data parameter . . . 107

error value inversion (PID), parameter . . . 167

exception codes, EFB modbus . . . 218

external comm module, parameter group
- see FBA, drive parameters

external commands selection, parameter . . . 111

external control selection, parameter . . . 113

external fault
- automatic reset, parameter . . . 148
- fault codes . . . 256
- parameters . . . 144

external reference, data parameter . . . 104

F

F1 and F2 screws
- location . . . 22
- on corner grounded TN system. . . . 23
- on IT systems . . . 23
- on symmetrically grounded TN systems . . . 23
- warning . . . 22, 279, 280

fan maintenance . . . 266, 268

fault
- functions, parameter group . . . 144
- history, parameter group . . . 110
- codes. . . . 254
- comm failure (EFB) . . . 206
- current at, history parameter . . . 110
- digital input status at, history parameter . . . 110
- FBA comm . . . 238
- frequency at, history parameter . . . 110
- history . . . 260
- last, history parameter. . . . 110
- listing . . . 254
- logging (Assistant Control Panel) . . . 57
- mode (Assistant Control Panel) . . 45, 253, 254
- mode (Basic Control Panel) . . . 65, 253, 254
- previous, history parameter. . . . 110
- reset . . . 259
- reset select, parameter . . . 125
- speed at, history parameter . . . 110
- status at, history parameter. . . . 110
- time of, history parameters . . . 110
- torque at, history parameter . . . 110
- voltage at, history parameter. . . . 110
- words, data parameters . . . 109

fault display
- alarm . . . 254
- fault . . . 253
- fault names . . . 254

FB actual signals, parameter group. . . . 108

FBA
- protocol listing . . . 231

FBA (fieldbus adapter). . . . 231
- actual values . . . 233
- analog output control, activate . . . 237
- comm fault response. . . . 238
- configuration . . . 235
- control word. . . . 232
- control word, ABB drives. . . . 242
- diagnostics . . . 239
- drive feedback. . . . 238
- fieldbus control, activate . . . 235
- input reference sel., activate . . . 236
- installation . . . 234
- PID control setpoint source, activate. . . . 238
- planning. . . . 233
- reference . . . 233
- relay output control, activate . . . 237
- set-up . . . 235
- start/stop /direction control, activate . . . 235
- state diagram, ABB drives. . . . 245
- status word . . . 233
- status word, ABB drives . . . 243

FBA, drive parameters . . . 178
- ext comm module parameter group . . . 178
- command words, data parameters. . . . 108
- config file CPI firmware revision, parameter. 178
- config file id revision, parameter. . . . 178
- config file revision, parameter . . . 178
- fault function, parameter. . . . 146
- fault time, parameter . . . 146
- fieldbus appl. program revision, parameter . 179
- fieldbus CPI firmware revision, parameter . . 178
- fieldbus parameter refresh, parameter 178
- fieldbus parameters . . . 178
- fieldbus status, parameter . . . 178
- fieldbus type, parameter. . . . 178
- protocol select, parameter . . . 198
- relay output word, data parameter . . . 105
- status words, data parameters. . . . 108
- values, data parameter. . . . 105

feedback
- multiplier (PID), parameter . . . 169
- on ABB manuals. . . . 319
- select (PID), parameter . . . 169

field weakening point . . . 283

fieldbus
- see EFB (embedded fieldbus)
- see EFB, drive parameters
- see FBA (fieldbus adapter)
- see FBA, drive parameters

fieldbus adapter
- see FBA
- see FBA, drive parameters

fieldbus, embedded
- see EFB
- see EFB, drive parameters

firmware
- panel, version . . . 43, 47
- version, parameter . . . 62, 151

first environment
- (C2), compliance with IEC/EN 61800-3 305
- (C2), motor cable length. . . . 284
- definition . . . 305

flange mounting . . . 16

FlashDrop
- application macro, parameter. . . . 102
- connection . . . 21
- parameter view, parameter . . . 128

floating network
- see IT system

flux braking, parameter . . . 141

flux optimization, parameter . . . 141

force trip, fault code . . . 257

frame errors (count), parameter . . . 180

frame size . . . 271

free fall, stress testing. . . . 301

frequency
- at fault, history parameter. . . . 110
- max. limit, parameter . . . 130
- min. limit, parameter. . . . 130
- motor, resolution. . . . 283
- motor, specification . . . 283
- switching, parameter . . . 142

fuses
208…240 V drives 276
380…480 V drives 276
500…600 V drives 277

G

gain (PID), parameter 166
generic profile, FBA
actual value mapping 251
actual value scaling 251
overview 250
reference scaling 250
technical data 250
gland kit 19
ground
cable/wire requirements 279
fault protection 286

H

hand-auto macro 78
harmonics 303
heat loss 295
hood (IP54 / UL type 12) 17, 32
how to do common tasks
with Assistant Control Panel 46
with Basic Control Panel 65

I

I/O settings (Assistant Control Panel) 63
I/O, control through 40
id run
fail, fault code 256
parameter 103
performing 41
identification magnetization 103
IEC ratings
see ratings
impedance grounded network
see IT system
incompatible software, fault code 258
information on the Internet 319
information, parameter group 151
input power
cable/wire requirements 278
disconnecting device (disconnecting means) 275
specifications 275
input power connection
IT system 280
lugs for R6 281
terminal size 280
torque 280
installation
check list 31
compatibility 14
environment 14
flow chart 11
location 15
mounting drive 18
preparation 12
procedures 11
tools 14
wiring overview 19
insulation check 26
integration time (PID), parameter 167
integration time, parameter 137
interlocks, parameter 192
internal setpoint (PID), parameter 169
Internet, information on 319
IR compensation
frequency, parameter 141
parameters 141
voltage, parameter 141
isolation, between AC power source and drive . 275
IT system
connections 280
warning about filters 6, 288
warning about screws at EM1, EM3 21
warning about screws at F1, F2 22

J

jogging activation, parameter 112

K

keypad
see control panel
keypad reference select, parameter 113
kWh
counter, data parameter 104

L

label
serial number 12
type designation 12
language, parameter 102
LED
on Assistant Control Panel 44, 253, 254
on drive body 21, 253, 254
library, document 319
limits, parameter group 129

load analyzer
parameter group 183
amplitude logger 1, distribution 184
amplitude logger 2 signal base value, par. . 183
amplitude logger 2 signal, parameter 183
amplitude logger 2, distribution 184
loggers reset date 184
loggers reset time 184
loggers reset, parameter 183
peak value logger filter time, parameter . . . 183
peak value logger signal, parameter 183
peak value logger, current at peak value . . 184
peak value logger, detected peak value . . . 183
peak value logger, frequency at peak value 184
peak value logger, peak value date 183
peak value logger, peak value time. 183
peak value logger, voltage at peak value . . 184
load curve, see user load curve
load frequency, see user load curve
load torque, see user load curve
loading package version, parameter 151
LOC (local control)
indication on Assistant Control Panel 45
indication on Basic Control Panel 64
local control mode lock, parameter 126
lock
control panel access, IP54 32
drive control at local control panel. 126
parameters 125
loggers
see load analyzer
low frequency (PFC), parameters 188
lugs
for R6 power cables 281
ring, crimp-on 281
terminal, screw-on. 282

M

macros
3-wire 75
ABB standard (default) 74
alternate 76
hand-auto 78
motor potentiometer 77
PFC. 80
PID control 79
torque control 81
user parameter sets 83
parameter default values. 84
parameters not changed 73
magnetization, identification 103
main menu
Assistant Control Panel. 46
Basic Control Panel. 65
mains
see input power
maintenance
capacitors 269
control panel. 269
heat sink 265
internal enclosure fan 268
intervals 265
main fan 266
triggers, parameter group. 143
manuals
list of ACS550 manuals 2
providing feedback 319
mapping
actual value, FBA, generic profile. 251
EFB modbus. 212
materials 301
maximum
frequency, parameter 130
torque limit, parameters 131
torque select, parameter 130
mechanical
angle, data parameter 106
revolutions, data parameter 106
minimum
frequency, parameter 130
torque limit, parameters 130
torque select, parameter 130
modbus
EFB addressing, convention 212
EFB coils 212
EFB discrete inputs 214
EFB holding registers 215
EFB input registers. 215
EFB mapping details 212
EFB mapping summary 212
EFB supported features 211
EFB technical data 211
motor
checking insulation 26
compatibility 14
id run, parameter 103
load curve break point frequency 145
load curve max., fault parameter 145
load curve zero speed load 145
maintenance triggers 143
nominal current, parameter 103
nominal frequency, parameter 103
nominal power, parameter 103
nominal speed, parameter 103
nominal voltage, parameter 103
phase, fault code 257
requirements 14
stall, fault code 256
thermal protection. 285
motor cable
checking insulation 26
length 283
max. length. 283
requirements 286
requirements, EMC 287
motor connection
lugs for R6 281
terminal size 280
torque 280

motor control
parameter group 141
control mode, parameter. 102
IR compensation, parameters. 141
motor potentiometer macro 77
motor temperature
measure, parameter group 155
alarm limit, parameter 156
data parameter 106
fault limit, parameter 157
overtemperature, fault code 255
sensor selection, parameter 156
sensor type, parameter. 156
thermal protection 285
thermal protection, fault parameter. 144
thermal stress, data parameter. 107
thermal time, fault parameter 145
motor, auxiliary
aux start order, parameter 197
aux. start delay (PFC), parameter. 188
aux. stop delay (PFC), parameter. 188
number of aux., parameter 189
motors
several 273, 283
mounting
dimensions 297
flange 16
template 16
multimotor systems 273, 283
MWh
counter, data parameter 106
power consumption, maintenance trigger. . 143

N

NEMA ratings
see ratings
noise
random sw. freq. parameter 142
NPN. 25

O

offset (PID), parameter 174
ok messages (count), parameter. 180
operating data, parameter group. 104
operation
Assistant Control Panel 45
Basic Control Panel 65
OPEX link, fault code 256
OPEX power, fault code 256
options. 13
parameter group 198
code 13
output
frequency, data parameter 104
voltage, data parameter 104
wiring, fault code. 257
output mode
Assistant Control Panel 49
Basic Control Panel 67
overcurrent
automatic reset, parameter. 148
fault code 254
overload curve
see user load curve
overspeed, fault code 257
overvoltage
control enable, parameter 129

P

panel communication, parameter group 180
panel display variables, parameter group. 152
panel firmware version 43, 47
panel loss, fault code 255
parameter
analog input scale, fault code. 258
analog output scale, fault code 258
change lock 125
descriptions 102
external relay output, fault code. 259
fieldbus, fault code 259
hz rpm, fault code. 258
listing (ranges, resolutions, defaults) 87
PCU 1 (power control unit), fault code 259
PCU 2 (power control unit), fault code 259
PFC IO, fault code 259
PFC mode, fault code 259
PFC ref. neg., fault code 258
save changes. 126
table version, parameter 151
user load curve, fault code. 259
view, parameter 128
parameter mode
Assistant Control Panel 51
Basic Control Panel 69
parameter restore
Assistant Control Panel 60
Basic Control Panel 71
parity
(RS-232), parameter 180
errors (count), parameter. 180
patents 306
PE earth
earth fault, parameter. 146
PE earth connection
terminal size. 280
torque. 280
peak value logging
see load analyzer
PELV (Protective Extra Low Voltage). 25
PFC
control, parameter group 186
acceleration time, parameter 197
aux start order, parameter 197
aux. motor start delay, parameter 188
aux. motor stop delay, parameter 188
deceleration time, parameter 197
enable, parameter 196
low frequency, parameters. 188
macro 80
number of aux. motors, parameter. 189
number of motors parameter 197
reference step, parameters 186
start delay, parameter 196
start frequency, parameters 187

PID
process sets, parameter groups 165
external / trimming, parameter group 174
0% (actual signal), parameter 168
100% (actual signal), parameter 168
actual input select, parameters 170
actual value max., parameters 170
actual value min., parameters 170
adjustment procedure 166
comm value 1, data parameter 107
comm value 2, data parameter 107
control macro 79
correction source, parameter 175
decimal point (actual signal), parameter . . . 167
derivation filter, parameter 167
derivation time, parameter 167
deviation, data parameter 105
error feedback inversion, parameter 167
external source activate, parameter 174
feedback multiplier, parameter 169
feedback select, parameter 169
feedback, data parameter 105
gain, parameter 166
integration time, parameter 167
internal setpoint, parameter 169
offset, parameter 174
output, data parameter 105
parameter set select, parameter 172
scaling (0…100%), parameters 168
setpoint maximum, parameter 169
setpoint minimum, parameter 169
setpoint select, parameter 168
setpoint source, EFB comm activate 206
setpoint source, FBA comm, activate 238
setpoint, data parameter 105
sleep delay, parameter 171
sleep level, parameter 171
sleep selection, parameter 170
trim mode, parameter 174
trim scale, parameter 174
units (actual signal), parameter 167
wake-up delay, parameter 171
wake-up deviation, parameter 171
PID controller
advanced set-up 166
basic set-up 165
planning
EFB comm 200
FBA comm 233
PNP 25
power
consumption (MWh) maintenance trigger . . 143
data parameter 104
previous faults, history parameters 110
process PID sets, parameter groups 165
process variables, data parameter 106
product
inquiries 319
training 319
profiles, EFB comm 212
proportional gain, parameter 137
protection
circuit, required w/ chopper 292
disconnecting device (disconnecting means) 275
enclosure standard 303
environmental 300
motor thermal 285
PT100 temperature sensor 156
PTC temperature sensor 156
pump power
see energy saving

R

radiation limits, conducted
EN 61800-3 288
ramp pair (accel/decel), parameter 135
range listing for parameters 87
ratings 271
reference
select, parameter group 113
corrections for parameter values 114
keypad control, parameter 113
maximum, parameters 115
minimum, parameters 115
mode (Basic Control Panel) 68
select source, parameter 113
step (PFC), parameters 186
reference scaling
EFB, ABB drives profile 228
FBA, ABB drives profile 246
FBA, generic profile 250
reference setting
Assistant Control Panel 50
Basic Control Panel 68
regulator by-pass control, parameter 196
relative humidity
environment limit 300
shipping limit 300
relay output
parameter group 120
activation condition parameters 120
off-delay, parameters 121
on-delay, parameters 121
status, data parameter 105
relays, specifications 293
REM (remote control)
indication on Assistant Control Panel 45
indication on Basic Control Panel 64
remove cover 17
reset, automatic
parameter group 148
analog input less than min., parameter 148
delay time, parameter 148
external fault, parameter 148
number of trials, parameter 148
overcurrent, parameter 148
trial time, parameter 148
undervoltage, parameter 148
resolution listing for parameters 87
resonance (avoiding)
select, parameter 140
revolution counter, data parameter 106
revolutions, mechanical, data parameter 106

ring lugs . . . 281
RS-232
baud rate, parameter . . . 180
parity, parameter . . . 180
station id, parameter . . . 180
RS-232 counts
buffer overruns, parameter . . . 180
CRC errors, parameter . . . 180
frame errors, parameter . . . 180
ok messages, parameter . . . 180
parity errors, parameter . . . 180
RS485 comm . . . 200
run enable source select, parameter . . . 125
run time
data parameter . . . 104, 106
maintenance trigger . . . 143

S

safety . . . 5
save changes parameter . . . 126
saving, energy
see energy saving
scalar:frequency mode . . . 102
scaling
actual value, FBA, ABB drives profile . . . 249
actual value, FBA, generic profile . . . 251
actual values, EFB comm . . . 207
reference, EFB, ABB drives profile . . . 228
reference, FBA, ABB drives profile . . . 246
reference, FBA, generic profile . . . 250
screw-on terminal lugs . . . 282
s-curve ramp, parameter . . . 135
second environment
(C3), compliance with IEC/EN 61800-3 . . . 305
(C3), motor cable length . . . 284
definition . . . 305
sensor type, parameter . . . 156
sensorless vector control mode . . . 102
serial 1 error (fault code 28) . . . 210
serial 1 error, fault code . . . 257
serial communication
see EFB (embedded fieldbus)
see EFB, drive parameters
see FBA (fieldbus adapter)
see FBA, drive parameters
serial number . . . 12, 13
service . . . 319
setpoint maximum (PID), parameter . . . 169
setpoint minimum (PID), parameter . . . 169
setpoint select (PID), parameter . . . 168
shock, stress testing . . . 301
short circuit, fault code . . . 255
single phase supply
connection . . . 19
derating . . . 274
sleep selection (PID), parameter . . . 170
slip compensation ratio, parameter . . . 142
soft keys (Assistant Control Panel) . . . 44
specifications
control connections . . . 293
input power . . . 275
mains . . . 275
speed
and direction (signed), data parameter . . . 104
at fault, history parameter . . . 110
data parameter . . . 104
max. limit, parameter . . . 129
min. limit, parameter . . . 129
speed control
parameter group . . . 137
acceleration compensation, parameter . . . 138
automatic tuning, parameter . . . 137, 138
derivation time, parameter . . . 137
integration time, parameter . . . 137
proportional gain, parameter . . . 137
vector:speed mode . . . 102
speed, constant
parameter group . . . 116
digital input selection parameter . . . 116
parameters . . . 117
stall
frequency, fault parameter . . . 146
function, fault parameter . . . 146
region . . . 146
time, fault parameter . . . 146
standards . . . 303
C22.2 No. 14 . . . 303
CE marking . . . 303
CSA marking . . . 304
C-Tick marking . . . 303
EN 50178 . . . 303
IEC 60664-1 . . . 303
IEC/EN 60204-1 . . . 303
IEC/EN 60529 . . . 303
IEC/EN 61000-3-12 . . . 303
IEC/EN 61800-3 . . . 303
IEC/EN 61800-5-1 . . . 303
UL 508C . . . 303
UL marking . . . 304
start
parameter group . . . 132
aux. motor (PFC), parameters . . . 187
aux. motor delay . . . 188
control, EFB comm . . . 203
control, FBA comm . . . 235
DC magnetizing time, parameter . . . 132
delay (PFC), parameter . . . 196
delay, parameter . . . 134
frequency (PFC), parameters . . . 187
function, parameter . . . 132
inhibit, parameter . . . 133
select enable source, parameter . . . 127
torque boost current, parameter . . . 133
start mode
automatic . . . 132
automatic torque boost . . . 132
DC magnetizing . . . 132
flying start . . . 132
start/stop
parameter group . . . 132
with Assistant Control Panel . . . 48
with Basic Control Panel . . . 66

start/stop/dir, parameter group 111
starting order counter 191
start-up
assistant 38, 53
data, parameter group. 102
guided, Assistant Control Panel 38
limited, Assistant or Basic Control Panel . . . 33
state diagram
comm (EFB) 227
comm, ABB drives. 245
station id (RS-232), parameter 180
status at fault, history parameter 110
status word
ABB drives, FBA, description 243
EFB comm, definition 222
FBA 233
FBA generic profile 250
stop
parameter group 132
aux. motor (PFC), parameters 188
aux. motor delay 188
DC brake time, parameter. 133
DC current control, parameter. 132
DC current ref., parameter 133
emergency devices 277
emergency select, parameter 133
flux braking, parameter 141
function, parameter 132
stress tests 301
supervision
parameter group 149
parameter low limit, parameters 149
parameter selection, parameters 149
supply phase, fault code 256
switching frequency 283
control, parameter. 142
derating 274
parameter 142
symmetrically grounded network
see corner grounded TN system
symmetrically grounded TN system 279
system controls, parameter group 125

T

temperature derating 274
template, mounting 16
terminal lugs 282
terminals
control, description 24
control, specifications 294
location diagram, R1…R4 21
location diagram, R5/R6 22
termination. 201
test date, parameter 151
thermal fail, fault code 256
three-wire sensor/transmitter, connection example 82
time and date setting (Assistant Control Panel) . 58
timed functions
parameter group. 158
autochange, parameter 197
booster, parameter 160
enable, parameter 159
source, parameter 160
speed control 118
start time, parameter 159
stop time, parameter 159
timed mode, parameter. 118
TN-S system 279
tools 14
top cover, see hood
torque
at fault, history parameter. 110
boost current, parameter 133
data parameter 104
max. limit select, parameter 130
max. limit, parameter 131
min. limit select, parameter 130
min. limit, parameters 130
ramp down, parameter 139
ramp up, parameter 139
torque control
parameter group. 139
macro 81
ramp down, parameter 139
ramp up, parameter 139
vector:torque mode 102
training 319
trim
mode (PID), parameter. 174
scale (PID), parameter 174
two-wire sensor/transmitter, connection example. 82
type code
see type designation
type designation 12, 13

U

U/f ratio, parameter. 141
UL/CSA markings 304
underload curve
see user load curve
undervoltage
automatic reset, parameter 148
control enable, parameter 129
ungrounded network
see IT system
units (PID), parameter. 167
unknown drive type, fault code 258
unpacking drive. 12
unsymmetrically grounded networks
see corner grounded TN system
user load curve
parameter group. 162
fault code 258
frequency, parameters 162, 163
function, parameter 162
mode, parameter 162
time, parameter 162
torque, parameters 162, 163

user parameter set 83
change control, parameter 126
download 60

V

vector:
speed mode 102
torque mode 102
version
firmware, parameter 62, 151
loading package, parameter 151
panel firmware 43, 47
parameter table, parameter 151
vibration, stress testing 301
voltage
at fault, history parameter 110
rating code 13
voltage/frequency ratio, parameter 141

W

wake-up
delay (PID), parameter 171
deviation (PID), parameter 171
warning
automatic start up 6
dangerous voltages 5
disconnecting device (disconnecting means) . 6
ELV (Extra Low Voltage) 25
EM1, EM3, F1 and F2 screws. 6
filter on corner grounded TN system. 6
filter on IT system 6
high temperatures 6
listing. 5
not field repairable 6
parallel control connections 5
qualified installer 5
weight 299
wiring
control 24
fault, parameter. 147
installation 26
installation steps, IP21/cables 27
installation steps, IP21/conduit 28
installation steps, IP54/cables 29
installation steps, IP54/conduit 30
overview 19
requirements, general 19

XYZ

zero pulse
detected, data parameter 106
enable, parameter. 177
zero speed
delay, parameter 134
load, fault parameter 145

Further information

Product and service inquiries

Address any inquiries about the product to your local ABB representative, quoting the type designation and serial number of the unit in question. A listing of ABB sales, support and service contacts can be found by navigating to www.abb.com/drives and selecting *Sales, Support and Service Network*.

Product training

For information on ABB product training, navigate to www.abb.com/drives and select *Training courses*.

Providing feedback on ABB Drives manuals

Your comments on our manuals are welcome. Go to www.abb.com/drives and select *Document Library – Manuals feedback form (LV AC drives)*.

Document library on the Internet

You can find manuals and other product documents in PDF format on the Internet. Go to www.abb.com/drives and select *Document Library*. You can browse the library or enter selection criteria, for example a document code, in the search field.

3AFE64804588 (3AUA0000001418) Rev G / EN
EFFECTIVE: 2009-07-07
SUPERSEDES: 3AFE64804588 (3AUA0000001418) Rev F 2007-04-16

ABB Oy
AC Drives
P.O. Box 184
FI-00381 HELSINKI
FINLAND
Telephone +358 10 22 11
Fax +358 10 22 22681
Internet www.abb.com

ABB Inc.
Automation Technologies
Drives & Motors
16250 West Glendale Drive
New Berlin, WI 53151
USA
Telephone +1 262 785-3200
+1 800-HELP-365
Fax +1 262 780-5135

ABB Beijing Drive Systems Co. Ltd.
No. 1, Block D, A-10 Jiuxianqiao Beilu
Chaoyang District
Beijing, P.R. China, 100015
Telephone +86 10 5821 7788
Fax +86 10 5821 7618
Internet www.abb.com

ABB Ltd.
Plot No 5 & 6
II Phase
Peenya Industrial Area
Bangalore 560 058
INDIA
Telephone +91 80 2294 9585
Fax +91 80 2294 9389

Model 640B01

Industrial 4 to 20 mA Vibration Sensor

Installation and Operating Manual

For assistance with the operation of this product , contact the Division of PCB Piezotronics, Inc.

Division toll-free 888-684-0015

24-hour SensorLineSM 716-684-0001

Fax 716-684-3823

E-mail imi@pcb.com

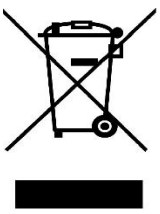

IMI SENSORS
A PCB PIEZOTRONICS DIV.

PCB PIEZOTRONICS INC.
A PCB GROUP COMPANY

Warranty, Service, Repair, and Return Policies and Instructions

The information contained in this document supersedes all similar information that may be found elsewhere in this manual.

Total Customer Satisfaction – PCB Piezotronics guarantees Total Customer Satisfaction. If, at any time, for any reason, you are not completely satisfied with any PCB product, PCB will repair, replace, or exchange it at no charge. You may also choose to have your purchase price refunded in lieu of the repair, replacement, or exchange of the product.

Service – Due to the sophisticated nature of the sensors and associated instrumentation provided by PCB Piezotronics, user servicing or repair is not recommended and, if attempted, may void the factory warranty. Routine maintenance, such as the cleaning of electrical connectors, housings, and mounting surfaces with solutions and techniques that will not harm the physical material of construction, is acceptable. Caution should be observed to insure that liquids are not permitted to migrate into devices that are not hermetically sealed. Such devices should only be wiped with a dampened cloth and never submerged or have liquids poured upon them.

Repair – In the event that equipment becomes damaged or ceases to operate, arrangements should be made to return the equipment to PCB Piezotronics for repair. User servicing or repair is not recommended and, if attempted, may void the factory warranty.

Calibration – Routine calibration of sensors and associated instrumentation is recommended as this helps build confidence in measurement accuracy and acquired data. Equipment calibration cycles are typically established by the users own quality regimen. When in doubt about a calibration cycle, a good "rule of thumb" is to recalibrate on an annual basis. It is also good practice to recalibrate after exposure to any severe temperature extreme, shock, load, or other environmental influence, or prior to any critical test.

PCB Piezotronics maintains an ISO-9001 certified metrology laboratory and offers calibration services, which are accredited by A2LA to ISO/IEC 17025, with full traceablility to N.I.S.T. In addition to the normally supplied calibration, special testing is also available, such as: sensitivity at elevated or cryogenic temperatures, phase response, extended high or low frequency response, extended range, leak testing, hydrostatic pressure testing, and others. For information on standard recalibration services or special testing, contact your local PCB Piezotronics distributor, sales representative, or factory customer service representative.

Returning Equipment – *Following these procedures will insure that your returned materials are handled in the most expedient manner*. Before returning any equipment to PCB Piezotronics, contact your local distributor, sales representative, or factory customer service representative to obtain a Return

Materials Authorization (RMA) Number. This RMA number should be clearly marked on the outside of all package(s) and on the packing list(s) accompanying the shipment. A detailed account of the nature of the problem(s) being experienced with the equipment should also be included inside the package(s) containing any returned materials.

A Purchase Order, included with the returned materials, will expedite the turn-around of serviced equipment. It is recommended to include authorization on the Purchase Order for PCB to proceed with any repairs, as long as they do not exceed 50% of the replacement cost of the returned item(s). PCB will provide a price quotation or replacement recommendation for any item whose repair costs would exceed 50% of replacement cost, or any item that is not economically feasible to repair. For routine calibration services, the Purchase Order should include authorization to proceed and return at current pricing, which can be obtained from a factory customer service representative.

Warranty – All equipment and repair services provided by PCB Piezotronics, Inc. are covered by a limited warranty against defective material and workmanship for a period of one year from date of original purchase. Contact PCB for a complete statement of our warranty. Expendable items, such as batteries and mounting hardware, are not covered by warranty. Mechanical damage to equipment due to improper use is not covered by warranty. Electronic circuitry failure caused by the introduction of unregulated or improper excitation power or electrostatic discharge is not covered by warranty.

Contact Information – International customers should direct all inquiries to their local distributor or sales office. A complete list of distributors and offices can be found at www.pcb.com. Customers within the United States may contact their local sales representative or a factory customer service representative. A complete list of sales representatives can be found at www.pcb.com. Toll-free telephone numbers for a factory customer service representative, in the division responsible for this product, can be found on the title page at the front of this manual. Our ship to address and general contact numbers are:

PCB Piezotronics, Inc.
3425 Walden Ave.
Depew, NY 14043 USA
Toll-free: (800) 828-8840
24-hour SensorLine℠: (716) 684-0001
Website: www.pcb.com
E-mail: info@pcb.com

IMI SENSORS
A PCB PIEZOTRONICS DIV.

SENSORS AND INSTRUMENTATION FOR MACHINE CONDITION MONITORING

Model 640/641/645/646 B Series Industrial 4-20mA Sensor

CE

Operating Guide with Enclosed Warranty Information

3425 Walden Avenue, Depew, New York 14043-2495

Phone (716) 684-0003

Fax (716) 684-3823

Toll Free Line 1-800-959-4IMI

MANUAL NUMBER: 25317
MANUAL REVISION: D
ECN NUMBER: 26800

IMI SENSORS
A PCB PIEZOTRONICS DIV.

Table of Contents

Introduction ..... *Page 3*

General Features

Dimension Drawing ..... *Page 4*

Operation and Wiring ..... *Page 5*

Standard Wiring
Taking Measurements
RV Option
RVVO Option
TO Option

Installation ..... *Page 9*

Direct Adhesive Mount
Standard Stud Mount
Adhesive Stud Mount
Magnetic Mount

ESD Sensitivity ..... *Page 13*

Warranty/Servicing

Warranty, Service & Return Procedure ..... *Page 14*

Customer Service ..... *Page 15*

Introduction

The Model 640/641/645/646 B Series Industrial 4-20mA Sensors combine the capabilities of a piezoelectric vibration sensor and a 4-20mA vibration transmitter. The sensor outputs a 4-20mA signal that is proportional to the overall velocity or acceleration of the machinery. Ideal for monitoring the vibration of process equipment such as fans, motors and pumps, the output of the sensor is used for process control or predictive maintenance. There are many options in this series. Please refer to specific specification sheets for further details.

General Features

- Imbedded Piezoelectric Accelerometer for improved accuracy and frequency response.
- Vibration range can be in Acceleration or Velocity.
- Allows for continuous vibration monitoring of critical applications.
- Reduces sophisticated vibration analysis requirements.
- RV (Raw Vibration) option for conducting frequency analysis and machinery diagnostics.
- RVVO (Raw Vibration Velocity Output) option for conducting freq. analysis and machinery diagnosis.
- TO (Temperature Output) option via an independent 4-20mA loop.
- Readily interfaces to existing process control and predictive maintenance equipment.
- Rugged stainless steel construction for applications in harsh environments.
- Flexible design allows for various custom requirements.

Dimension Drawing

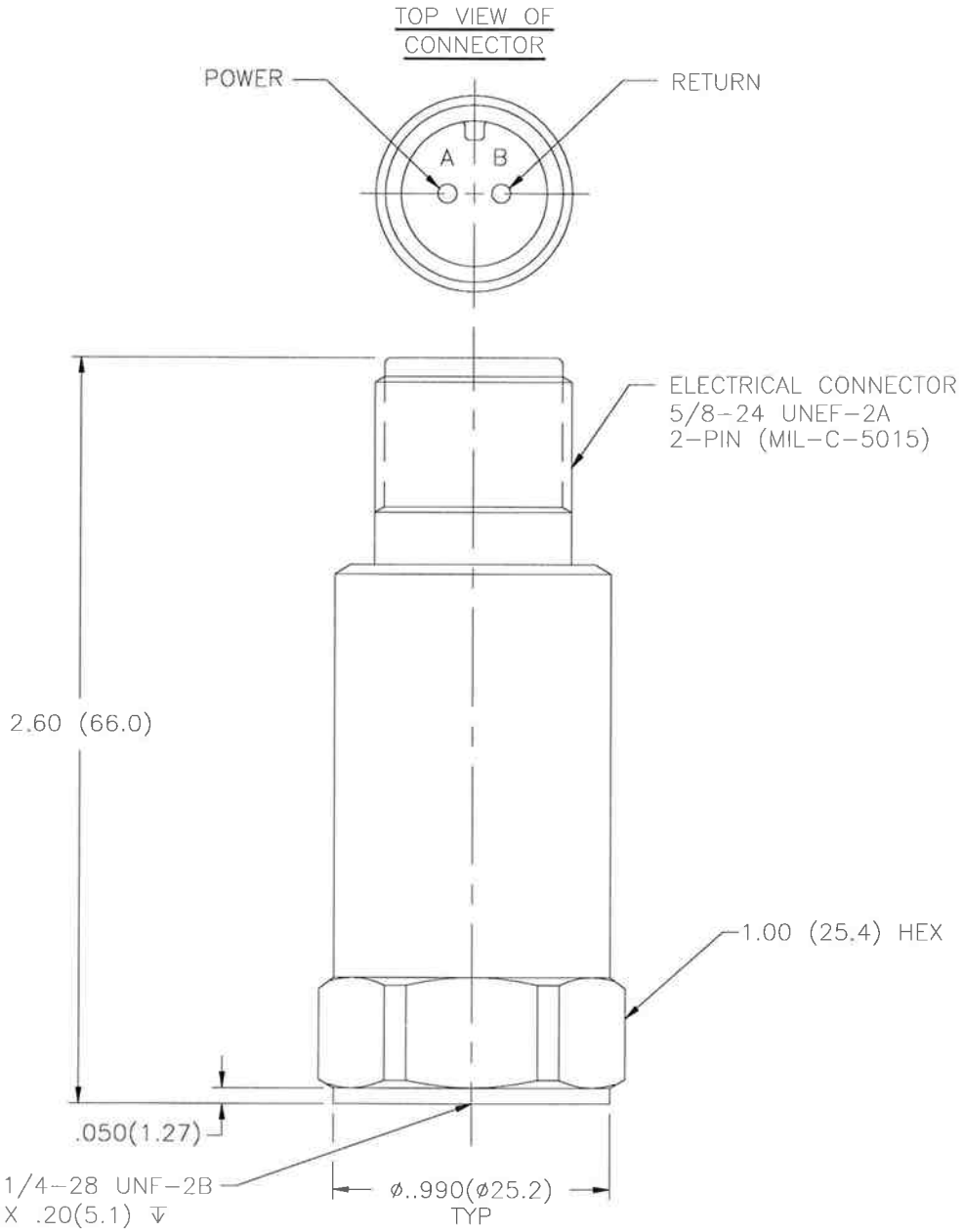

Inch (mm)

Operation and Wiring

Standard Wiring

The Model 640/641/645/646 B Series operates from a standard 2-wire, 4-20mA loop. If using a loop powered unit, attach the positive (+) input from the power supply to Pin A or **Red** wire on the sensor and the negative (-) input from the power supply to Pin B or **Blue** wire of the sensor.

Figure 1 – wiring: loop powered

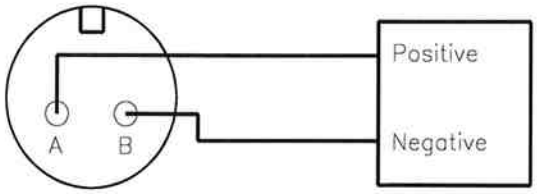

Figure 2 – wiring: loop powered/DC source

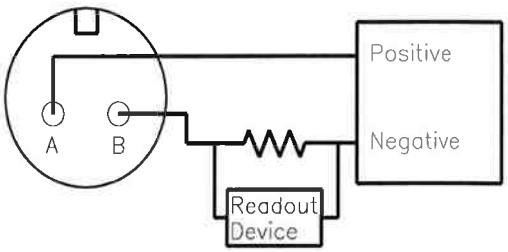

If using a standard DC power supply, install either an ammeter and/or load resistor in line with the output, Pin B or **Blue** wire.

The resistor will generate a DC voltage that is proportional to current by:

$$V = IR$$

$$If\ R = 500\ ohms\ and\ I = 6\ mA, then\ V = 3\ VDC$$

Note:

- Resistor value must be less than: (Vsupply – 12) x 50.
- For integral cable sensors: RED wire is positive, BLUE wire is negative.

Taking Measurements

When measuring the current output from the unit, use the following formula to calculate the vibration level:

Vibration Output = (Measured Output – 4mA) x (Full Scale Vibration Output /16mA)

Measured mA	640BX0	640BX1	640BX2
4.00	0.0 ips, pk	0.0 ips, pk	0.0 ips, pk
8.00	0.125 ips, pk	0.25 ips, pk	0.5 ips, pk
12.0	0.25 ips, pk	0.5 ips, pk	1.0 ips, pk
15.75	0.37 ips, pk	0.73 ips, pk	1.47 ips, pk
20	0.5 ips, pk	1.0 ips, pk	2.0 ips, pk

Measured mA	641BX0	641BX1	641BX2
4.00	0.0 ips, rms	0.0 ips, rms	0.0 ips, rms
8.00	0.125 ips, rms	0.25 ips, rms	0.5 ips, rms
12.0	0.25 ips, rms	0.5 ips, rms	1.0 ips, rms
15.75	0.37 ips, rms	0.73 ips, rms	1.47 ips, rms
20	0.5 ips, rms	1.0 ips, rms	2.0 ips, rms

Measured mA	645	646
4.00	0.0 g rms	0.0 g rms
8.00	1.25 g rms	2.50 g rms
12.0	2.50 g rms	5.00 g rms
15.75	3.67 g rms	7.34 g rms
20	5.00 g rms	10.0 g rms

RV Option

The RV (raw vibration) option includes a 100mV/g ±20% additional output. The accelerometer frequency range is 1 Hz-10 kHz, maximum amplitude of 15 g-pk. Data collectors or analyzers can use this vibration signal for further analysis. This output is extended to the RVVO (Raw Vibration Velocity Output) option, which integrates the signal to a value of 100mV/IPS (±20%).

Figure 3 – RV and RVVO wiring

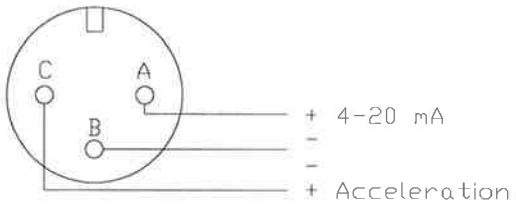

For integral cable sensors:

RED	***4-20mA Positive***
BLACK	***4-20mA Negative*** *(same as green)*
GREEN	***-RV and RVVO negative*** *(same as black)*
WHITE	***+RV and RVVO positive***

Note:

-The RV and RVVO Signal Negative has to be isolated from any grounding. If this terminal is grounded, the 4-20mA loop will short, causing no output.

-The RV and RVVO output signal is ideally suited for use with portable battery powered data collectors or analyzers.

TO Option

The TO (Temperature Output) option includes an additional independent 4-20mA output for temperature measurement. The temperature range is from -40°C to 125°C with an overall accuracy of ±5%FSO. The imbedded temperature sensor monitors the environment internal to the sensor housing and is situated at approximately mid level.

Figure 4 – TO wiring

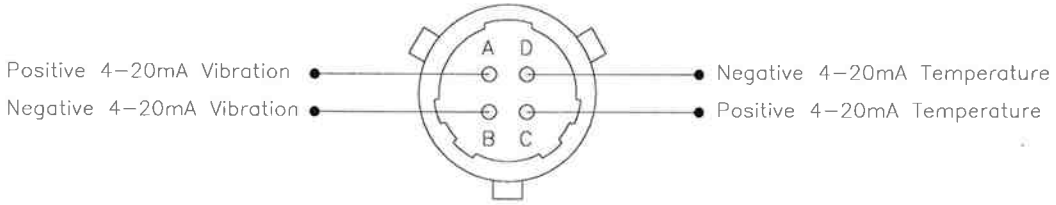

For integral cable sensors:

RED	***4-20mA Vibration Positive***
BLACK	***4-20mA Vibration Negative***
GREEN	***4-20mA Temperature Negative***
WHITE	***4-20mA Temperature Positive***

Note:

- The same power supply can be used for both4-20mA loops. Connect the both positive terminals to directly to the power supply, then use the negative terminals for independent process loops.

Installation

When choosing a mounting method, consider closely the advantages and disadvantages of each technique. Typical mounting types are stud, direct adhesive, adhesive mounting base and magnetic mounting base. Since the frequency response is limited to 1 kHz on the 640/641, any of the four methods can be used without seriously affecting the data values. The mounting method might affect some of the 645/646 series because of the increased frequency response.

Direct Adhesive Mount Procedure

For restrictions of space or for convenience, most sensors (with the exception of integral stud models) can be adhesive-mounted directly to the machine surface.

STEP 1 Prepare a smooth, flat mounting surface. A minimum surface finish of 63 µin [0,00016 mm] generally works best.

STEP 2 Place a small portion of adhesive on the underside of the sensor. Firmly press down on the top of the assembly to displace any adhesive. Be aware that excessive amounts of adhesive can make sensor removal difficult.

Figure 5 – direct adhesive mounting

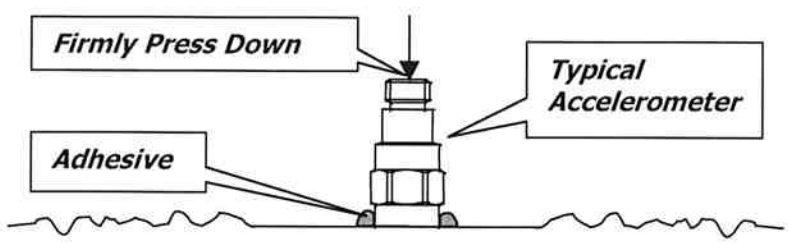

Standard Stud Mount Procedure

This mounting technique requires smooth, flat contact surfaces for proper operation and is recommended for permanent and/or secure installations. Stud mounting is also recommended when testing at high frequencies.

Note: DO NOT attempt mounting on curved, rough or uneven surfaces, as the potential for misalignment and limited contact surface may significantly reduce the sensor's upper operating frequency range.

Figure 6 – mounting surface preparation

1/4-28 Stud	*1/4-28 Captive Screw*	
A (in)	*0.250*	*0.250*
B (in)	*0.350*	*0.350*
Torque (ft-lb)	*2 to 5*	*2 to 5*

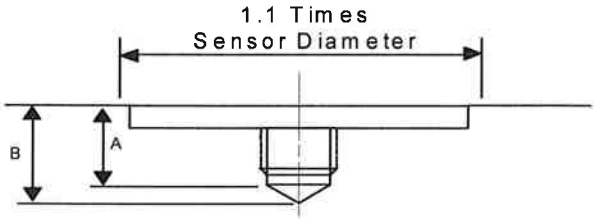

STEP 1 First, prepare a smooth, flat mounting surface, and then drill and tap a mounting hole in the center of this area as shown in Figure 6. A precision-machined mounting surface with a minimum finish of 63 µin [0,00016 mm] is recommended. (If it is not possible to properly prepare the machine surface, consider using an adhesive mounting pad as a possible alternative.) Inspect the area, checking that there are no burrs or other foreign particles interfering with the contact surface.

STEP 2 Wipe clean the mounting surface and spread on a light film of grease, oil or similar coupling fluid prior to installation.

Figure 7 – mounting surface lubrication

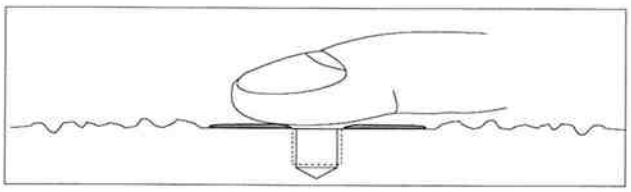

Adding a coupling fluid improves vibration transmissibility by filling small voids in the mounting surface and increasing the mounting stiffness. For semi-permanent mounting, substitute epoxy or another type of adhesive.

STEP 3 HAND-tighten the sensor/mounting stud to the machine, then secure the sensor with a torque wrench to the mounting surface by applying the recommended mounting torque (see enclosed specification data sheet for proper mounting torque). It is important to use a torque wrench during this step. **Under-torquing the sensor may not adequately couple the device; over-torquing may result in stud failure and possibly permanent damage.**

Adhesive Stud Mount Procedure

Adhesive mounting is often used for temporary installation or when the machine surface cannot be adequately prepared for stud mounting. Adhesives like hot glue or wax work well for temporary mounts; two-part epoxies and quick-bonding gels provide a more permanent mount.

Note: Adhesively mounted sensors often exhibit a reduction in high-frequency range. Generally, smooth surfaces and stiff adhesives provide the best frequency response. Contact the factory for recommended epoxies.

This method involves attaching a base to the machine surface, then securing the sensor to the base. This allows for easy removal of the accelerometer.

STEP 1 Prepare a smooth, flat mounting surface. A minimum surface finish of 63 µin [0,00016 mm] generally works best.

STEP 2 Stud-mount the sensor to the appropriate adhesive mounting base according to the guidelines set forth in Steps 2 and 3 of the *Standard Stud Mount Procedure*.

STEP 3 Place a small portion of adhesive on the underside of the mounting base. Firmly press down on the assembly to displace any extra adhesive remaining under the base.

Figure 8 – mounting base: adhesive installation

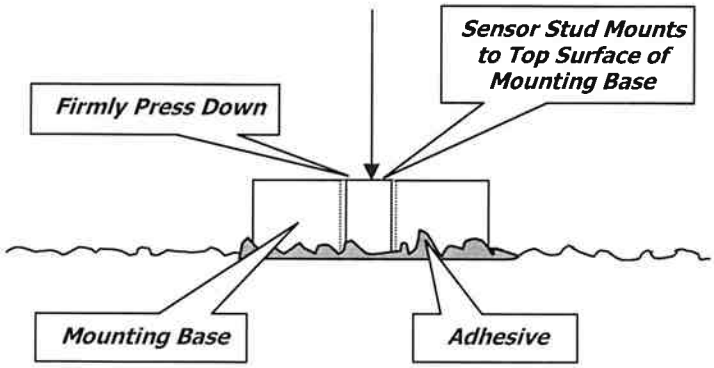

Magnetic Mount Procedure

Magnetic mounting provides a convenient means for making portable measurements and is commonly used for machinery monitoring and other portable or trending applications.

Note: *The correct magnet choice and an adequately prepared mounting surface is critical for obtaining reliable measurements, especially at high frequencies. Poor installations can cause as much as a 50% drop in the sensor frequency range.*

Not every magnet is suitable for all applications. For example, rare earth magnets are commonly used because of their high strength. Flat magnets work well on smooth, flat surfaces, while dual-rail magnets are required for curved surfaces. In the case of non-magnetic or rough surfaces, it is recommended that the user first weld, epoxy or otherwise adhere a steel mounting pad to the test surface. This provides a smooth and repeatable location for mounting.

Figure 9 – magnet types

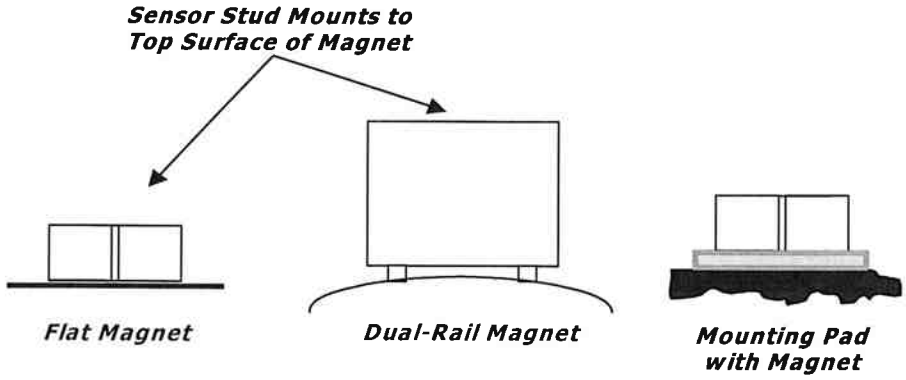

ALL SURFACES SHOULD BE FLAT AND SMOOTH

STEP 1 After choosing the correct magnet type, inspect the unit, verifying that the mounting surfaces are flat and smooth.

STEP 2 Stud-mount the accelerometer to the appropriate magnet according to the guidelines set forth in Steps 2 and 3 of the Standard Stud Mount Procedure.

STEP 3 Prepare a smooth, flat mounting surface. A minimum surface finish of 63 µin [0,00016 mm] generally works best. After cleaning the surface and checking for burrs, wipe on a light film of silicone grease, machine oil or similar-type coupling fluid.

STEP 4 Mount the magnet/sensor assembly to the prepared test surface by gently "rocking" or "sliding" it into place.

Note: Magnetically mounting accelerometers carelessly has the potential to generate very high (and very damaging) g levels. To prevent damage, install the assembly gently. If unsure, please contact the factory for assistance.

Warning 1 – ESD sensitivity

The power supply/signal conditioner should not be opened by anyone other than qualified service personnel. This product is intended for use by qualified personnel who recognize shock hazards and are familiar with the safety precautions required to avoid injury.

Warning 2 – ESD sensitivity

This equipment is designed with user safety in mind; however, the protection provided by the equipment may be impaired if the equipment is used in a manner not specified by PCB Piezotronics, Inc.

Caution 1 – ESD sensitivity

Cables can kill your equipment. High voltage electrostatic discharge (ESD) can damage electrical devices. Similar to a capacitor, a cable can hold a charge caused by triboelectric transfer, such as that which occurs in the following:

- *Laying on and moving across a rug,*
- *Any movement through air,*
- *The action of rolling out a cable, and/or*
- *Contact with a non-grounded person.*

The PCB solution for product safety:

- *Connect the cables only with the AC power off.*
- *Temporarily "short" the end of the cable before attaching it to any signal input or output.*

Caution 2 – ESD sensitivity

ESD considerations should be made prior to performing any internal adjustments on the equipment. Any piece of electronic equipment is vulnerable to ESD when opened for adjustments. Internal adjustments should therefore be done ONLY at an ESD-safe work area. Many products have ESD protection, but the level of protection may be exceeded by extremely high voltage.

Warranty

IMI instrumentation is warranted against defective material and workmanship for 1 year unless otherwise expressly specified. Damage to instruments caused by incorrect power or misapplication, is not covered by warranty. *If there are any questions regarding power, intended application, or general usage, please consult with your local sales contact or distributor.* Batteries and other expendable hardware items are not covered by warranty.

Service

Because of the sophisticated nature of IMI instrumentation, field repair is typically **NOT** recommended and may void any warranty. If factory service is required, return the instrumentation according to the "Return Procedure" stated below. *A repair and/or replacement quotation will be provided prior to servicing at no charge.* Before returning the unit, please consult a factory IMI applications engineer concerning the situation as certain problems can often be corrected with simple on-site procedures.

Return procedure

To expedite returned instrumentation, contact a factory IMI applications engineer for a RETURN MATERIAL AUTHORIZATION (RMA) NUMBER. Please have information available such as model and serial number. Also, to insure efficient service, *provide a written description of the symptoms and problems with the equipment to a local sales representative or distributor, or contact IMI if none are located in your area.*

Customers outside the U.S. should consult their local IMI distributor for information on returning equipment. For exceptions, please contact the International Sales department at IMI to request shipping instructions and an RMA. For assistance, please call (716) 684-0003, or fax us at (716) 684-3823. You may also receive assistance via e-mail at **imi@pcb.com** or visit our web site at **www.pcb.com**.

Customer Service

IMI, a division of PCB Piezotronics, guarantees **Total Customer Satisfaction**. If, at any time, for any reason, you are not completely satisfied with any IMI product, IMI will repair, replace, or exchange it at no charge. You may also choose to have your purchase price refunded.

IMI offers to all customers, at no charge, 24-hour phone support. This service makes product or application support available to our customers, day or night, seven days a week. When unforeseen problems or emergency situations arise, call the **IMI Hot Line at (716) 684-0003**, and an application specialist will assist you.

IMI SENSORS
A PCB PIEZOTRONICS DIV.

3425 Walden Avenue, Depew, NY 14043-2495
Phone: (716) 684-0003 • USA Fax: (716) 684-3823 • INTL Fax: (716) 684-4703

ICP® is a registered trademark of PCB Group, Incorporated, which uniquely identifies PCB sensors that incorporate built-in microelectronics.

Model Number	LOOP POWERED CURRENT OUTPUT SENSOR	Revision: E
640B01		ECN #: 25866

Performance	ENGLISH	SI	
Measurement Range	0.0 to 1 in/s pk	0.0 to 25.4 mm/s pk	[1]
Output	4-20 mA	4-20 mA	
Frequency Range(± 10 %)	180 to 60,000 cpm	3 to 1000 Hz	[2][3]
Broadband Resolution	0.005 in/s pk	0.13 mm/s pk	[4]
Non-Linearity	± 1 %	± 1 %	
Environmental			
Temperature Range	-40 to 185 °F	-40 to 85 °C	
Electrical			
Excitation Voltage	12 to 30 VDC	12 to 30 VDC	
Load Resistance	50 (Vs-12) ohms	50 (Vs-12) ohms	
Settling Time(within 2% of value)	<15 sec	<15 sec	
Electrical Isolation(Case)	$>10^8$ ohm	$>10^8$ ohm	
Physical			
Size (Hex x Height)	1.0 in x 2.6 in	25.4 mm x 66 mm	
Weight	4.7 oz	131 gm	
Mounting Thread	1/4-28 UNF	Not Applicable	
Mounting Torque	3 to 5 ft-lb	4 to 7 N-m	
Sensing Element	Ceramic	Ceramic	
Sensing Geometry	Shear	Shear	
Housing Material	Stainless Steel	Stainless Steel	
Sealing	Welded Hermetic	Welded Hermetic	
Electrical Connector	2-Pin MIL-C-5015	2-Pin MIL-C-5015	
Electrical Connection Position	Top	Top	
Electrical Connections(Pin A)	4-20 mA Pos (+)	4-20 mA Pos (+)	
Electrical Connections(Pin B)	4-20 mA Neg (-)	4-20 mA Neg (-)	

CE [5]

Ex

C US

All specifications are at room temperature unless otherwise specified.
In the interest of constant product improvement, we reserve the right to change specifications without notice.

ICP® is a registered trademark of PCB Group, Inc.

OPTIONAL VERSIONS

Optional versions have identical specifications and accessories as listed for the standard model except where noted below. More than one option may be used.

EX - ATEX or ATEX and CSA Hazardous Area Approval

Hazardous Area Approval	EEx ia IIC T4, -40°C≤Ta≤80°C, II 1 G
Hazardous Area Approval	EEx nL IIC T4, -40°C≤Ta≤80°C, II 3 G
Hazardous Area Approval	DIV I, CL I, II, III, GRPS A-G, Exia, AExia, IIC T4
Hazardous Area Approval	DIV II, CL I, GRPS A-D, ExnL, AExnA, IIC T4

M - Metric Mount
Supplied Accessory : Model M081A61 Mounting Stud 1/4-28 to M6 X 1 (1) replaces Model 081A40

RV - Buffered Analog Signal Output - 100 mV/g (±20%)

Electrical Connector	3-Pin MIL-C-5015
Electrical Connections(Pin A)	4-20 mA Pos (+)
Electrical Connections(Pin B)	4-20 mA Neg/Signal Output Neg
Electrical Connections(Pin C)	Signal Output Pos

RVVO - Buffered Analog Signal Output - 100 mV/in/sec (±20%)

Electrical Connections(Pin A)	4-20 mA Pos (+)
Electrical Connections(Pin B)	4-20 mA Neg/Signal Output Neg
Electrical Connections(Pin C)	Signal Output Pos
Electrical Connector	3-Pin MIL-C-5015

NOTES:

[1] Conversion Factor 1 in/sec = 0.0254 m/sec.
[2] Current will fluctuate at frequencies below 5 Hz.
[3] 1Hz = 60 cpm (cycles per minute).
[4] Typical.
[5] See PCB Declaration of Conformance PS039 or PS053 for details.

SUPPLIED ACCESSORIES:

Model 081A40 Mounting Stud (1)
Model ICS-4 NIST-traceable single-axis amplitude response calibration from 0 cpm (0 Hz) to upper 10% frequency for 4 - 20 mA output vibration sensor (1)

Entered:	Engineer: MDZ	Sales:	Approved:	Spec Number:
Date: 2/19/07	Date: 2/22/07	Date: 2/28/07	Date: 2/28/07	25315

IMI SENSORS
A PCB PIEZOTRONICS DIV.
3425 Walden Avenue, Depew, NY 14043

Phone: 800-959-4464
Fax: 716-684-3823
E-Mail: imi@pcb.com

PCB Piezotronics Inc. claims proprietary rights in the information disclosed hereon. Neither it nor any reproduction thereof will be disclosed to others without the written consent of PCB Piezotronics Inc.

25316

REVISIONS			
REV	DESCRIPTION	ECN	APP'D
A	REVISED PER ECN	20524	DM 9/04
B	CHANGED "MILL" TO "MIL"	26998	ECB 8/07

TOP VIEW OF CONNECTOR

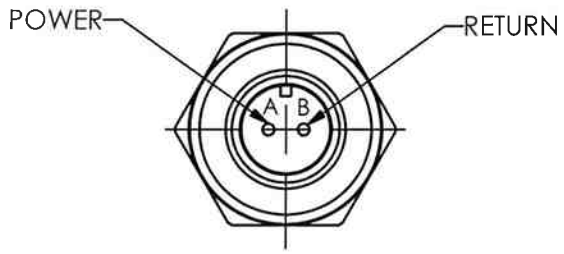

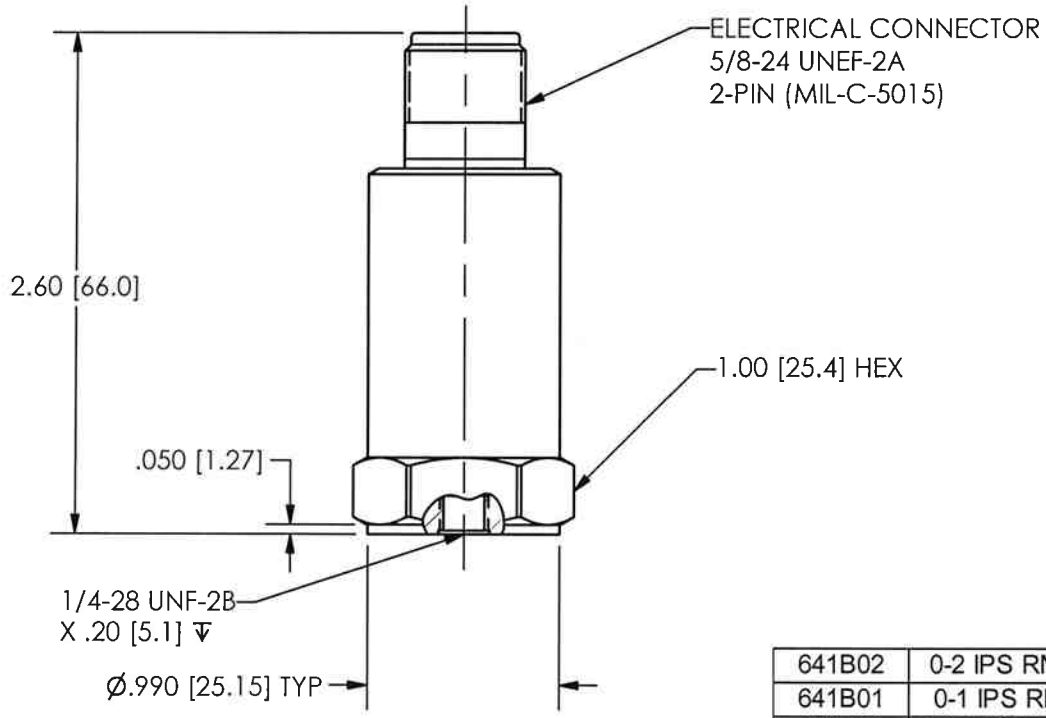

MODEL	DESCRIPTION
641B02	0-2 IPS RMS, 10Hz-1KHz
641B01	0-1 IPS RMS, 10Hz-1KHz
641B00	0-0.5 IPS RMS, 10Hz-1KHz
640B02	0-2 IPS PK, 3Hz-1KHz
640B01	0-1 IPS PK, 3Hz-1KHz
640B00	0-0.5 IPS PK, 3Hz-1HKz

UNLESS OTHERWISE SPECIFIED TOLERANCES ARE:

DIMENSIONS IN INCHES	DIMENSIONS IN MILLIMETERS [IN BRACKETS]
DECIMALS XX ± .03	DECIMALS X ± 0.8
XXX ± .010	XX ± 0.25
ANGLES ± 2 DEGREES	ANGLES ± 2 DEGREES
FILLETS AND RADII .003 - .005	FILLETS AND RADII [0.07 - 0.13]

DRAWN	MDF	8/1/07	MFG	JR	8/1/07
CHK'D	ECB	8/07	ENGR	MJI	8/1/07
APP'D	MJT	8/1/07	SALES	JJ	8/1/07

TITLE

OUTLINE DRAWING
MODEL 640B0X, M, 641B0X, M
4-20 mA VELOCITY TRANSMITTER

PCB PIEZOTRONICS INC
3425 WALDEN AVE. DEPEW, NY 14043
(716) 684-0001 E-MAIL: sales@pcb.com

CODE IDENT. NO. 52681

DWG. NO. 25316

SCALE: FULL SHEET 1 OF 1

LEGEND PLATE
DOOR FRONT

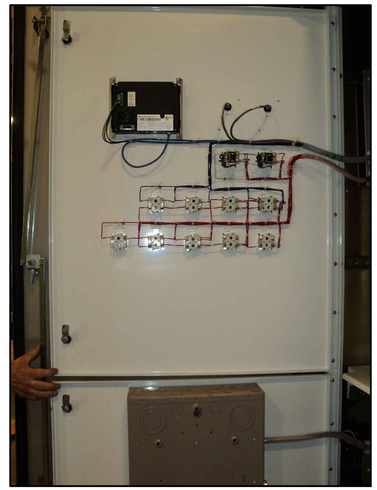

DOOR BACK

480 VOLT

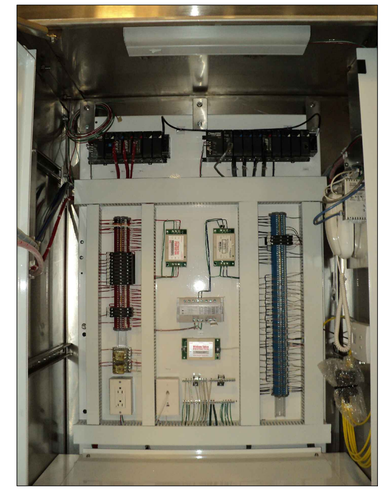

120 VOLT UPPER PANEL

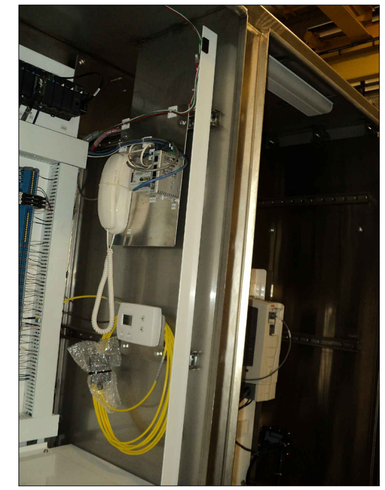

120 VOLT RIGHT SIDE

120 VOLT LOWER PANEL

REDUCED FROM ORIGINAL SIZE

LTR	DESCRIPTION	DATE	APPROVED
3	AS BUILT (9/13/11) SB		

REVISIONS

APPLICABLE JOB NO(S). 1641
BUNCOMBE CO

PEI PERENNIAL ENERGY
1280 COUNTY ROAD B690
WEST PLAINS, MO 65775
www.PerennialEnergy.com

This Drawing Contains Proprietary Data and May Not Be Duplicated, Copied, Reproduced or Otherwise Used In Any Manner Not in the Best Interest of Perennial Energy, Inc. All Ideas and Concepts Remain the Property of Perennial Energy, Inc.

ENGINEERING SIGNATURES

DESIGNED BY:	DATE
K.WADE	7/21/10
DRAWN BY:	DATE
T.HAVILAND/TFC	7/21/10

TITLE: CONTROL PANEL

UNLESS OTHERWISE SPECIFIED DIMENSIONS ARE IN INCHES

FRACT	.XX	ANGLES
±1/16	±.03	±0°30'

SIZE D 34x22

DWG. NO. PA-002-0348

MATERIAL: AS NOTED

SCALE AS NOTED | FILE NO. PA-002-0348 R3 S1.DWG | SHEET 2 OF 2

T:\ACAD\1601-1650\1641\PA-002-0348 R3 S1.dwg, 9/13/2011 12:27:07 PM, steve

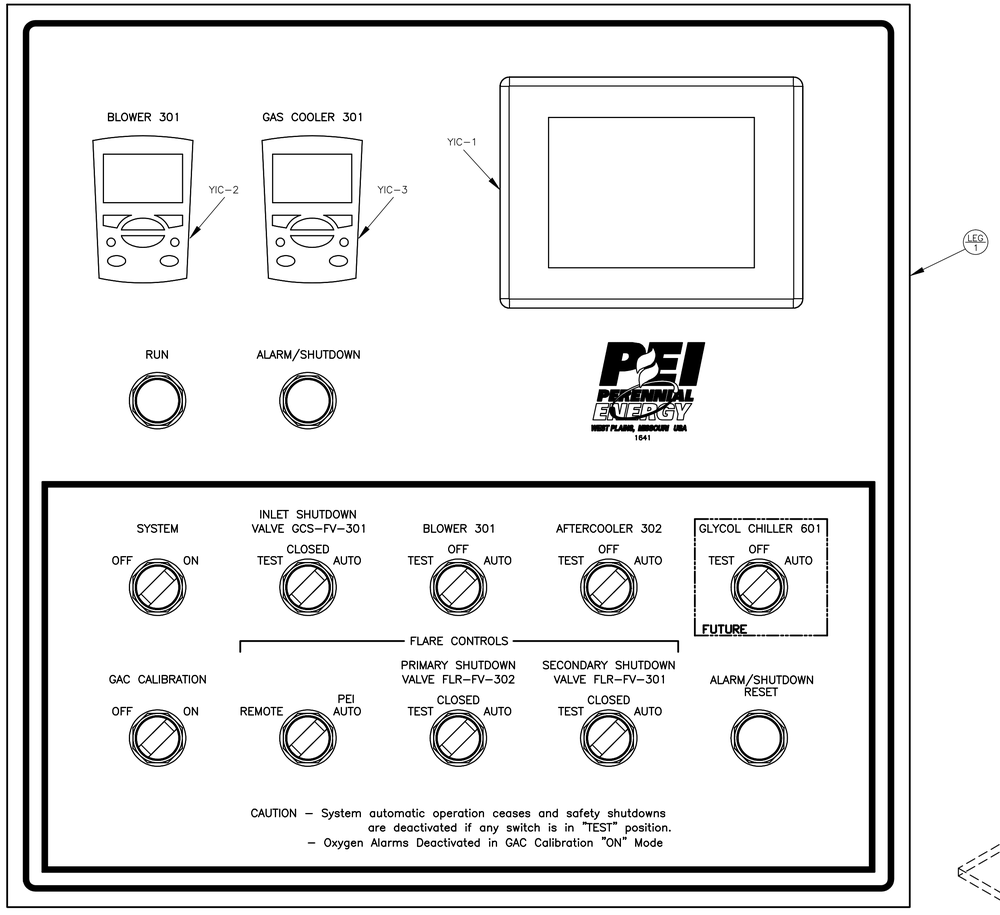

LEGEND PLATE

SCALE: 1=2

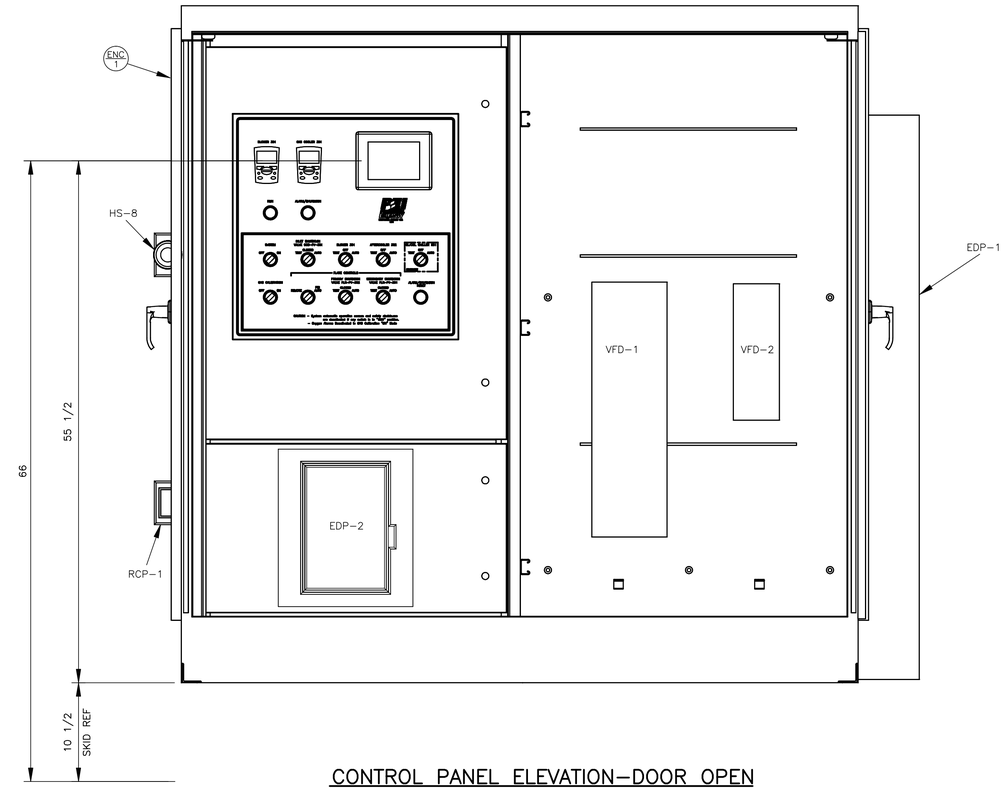

CONTROL PANEL ELEVATION–DOOR OPEN

SCALE: 1=8

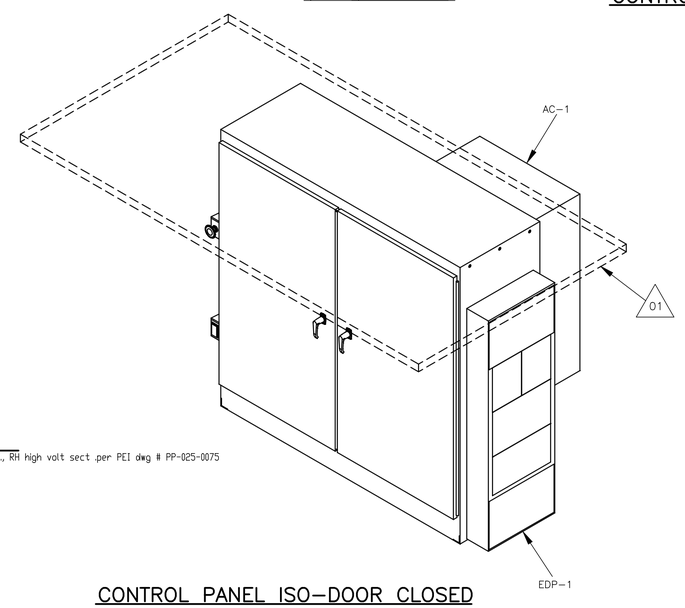

CONTROL PANEL ISO–DOOR CLOSED

SCALE: 1=16

REDUCED FROM ORIGINAL SIZE

(XX) REFERENCED PARTS

Part ID	Section	Drawing ID	RefDes	RefDesQty	UnitQty	TotalQty	Component	MFG / Material / Type	Description
3622	CP	PA-002-0348	CP-ENC-1	1 ea	1 ea	1 ea	Enclosure	Schaefer	SPFSD-727224-0075-SS, LH swing sect., RH high volt sect .per PEI dwg # PP-025-0075
7392	CP	PA-002-0348	CP-LEG-1	1 ea	1 ea	1 ea	Legend	Metal Photo	PA-018-0352, Per spec #1641

(XX) REFERENCED DRAWINGS

Drawing ID	RefDes	RefDesQty	Component
PP-025-0107		1 ea	Stainless Sun/Rain Shield-120" x 62" Four Piece

LTR	DESCRIPTION	DATE	APPROVED
3	AS BUILT (9/13/11) SB		

REVISIONS

APPLICABLE JOB NO(S). 1641
BUNCOMBE CO

PEI PERENNIAL ENERGY
1280 COUNTY ROAD 8690
WEST PLAINS, MO 65775
www.PerennialEnergy.com

This Drawing Contains Proprietary Data and May Not Be Duplicated, Copied, Reproduced or Otherwise Used In Any Manner Not in the Best Interest of Perennial Energy, Inc. All Ideas and Concepts Remain the Property of Perennial Energy, Inc.

ENGINEERING SIGNATURES

DESIGNED BY:	K.WADE	DATE 7/21/10
DRAWN BY:	T.HAVILAND/TFC	DATE 7/21/10

TITLE: CONTROL PANEL

UNLESS OTHERWISE SPECIFIED DIMENSIONS ARE IN INCHES
FRACT ±1/16 .XX ±.03 ANGLES ±0°30'

SIZE D 34x22 | DWG. NO. PA–002–0348

MATERIAL: AS NOTED | SCALE AS NOTED | FILE NO. PA–002–0348 R3 S1.DWG | SHEET 1 OF 2

T:\ACAD\P1601-1650\1641\PA-002-0348 R3 S1.dwg, 9/13/2011 12:29:59 PM, steve

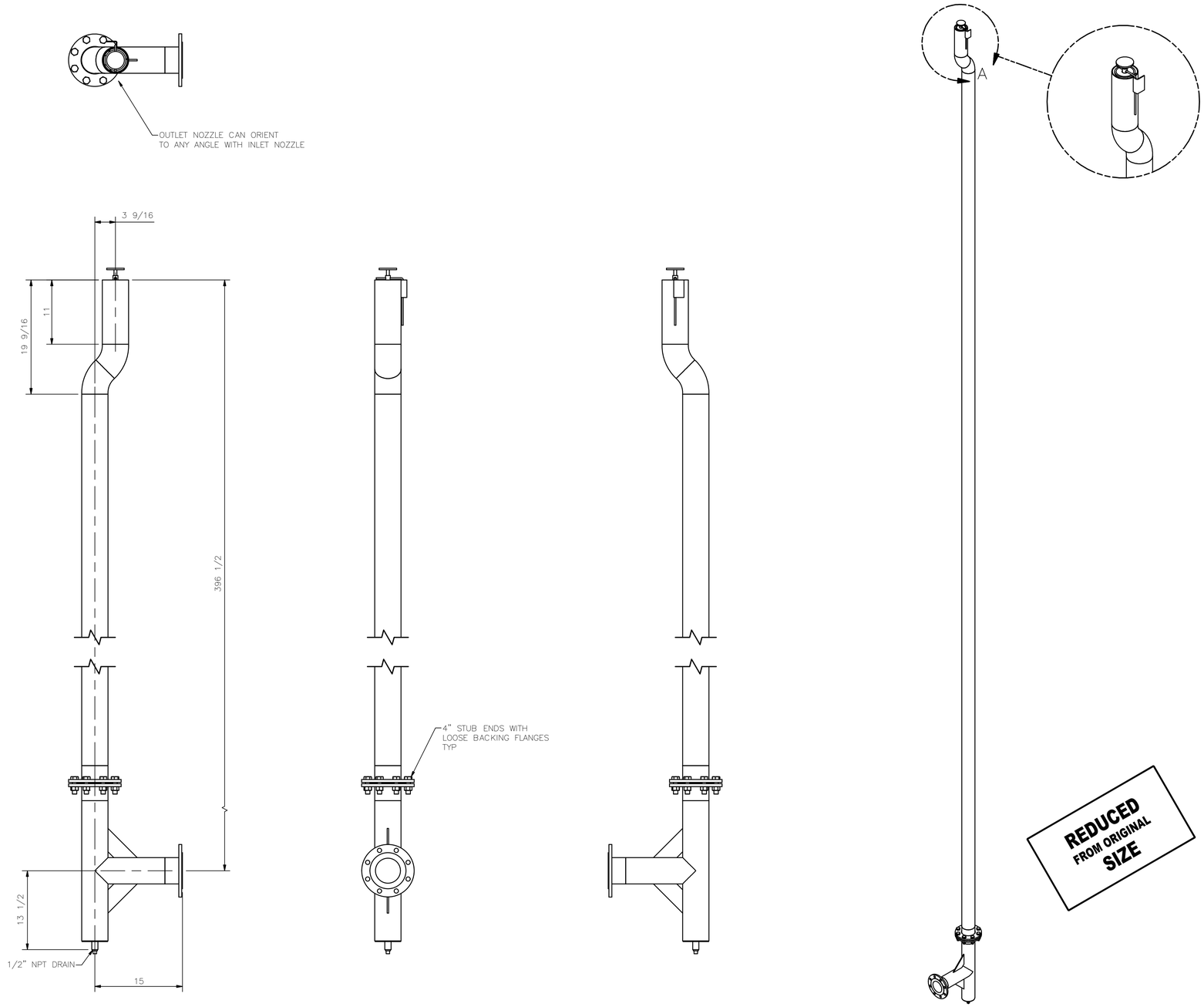

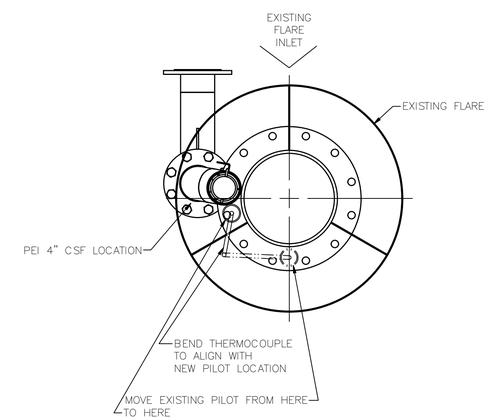

REDUCED FROM ORIGINAL SIZE

LTR	DESCRIPTION	DATE	APPROVED
1	AS BUILT (9/13/11) SB		

REVISIONS

APPLICABLE JOB NO(S). 1641
BUNCOMBE CO

PERENNIAL ENERGY
1375 COUNTY ROAD 8690
WEST PLAINS, MO 65775
www.PerennialEnergy.com

This Drawing Contains Proprietary Data and May Not Be Duplicated, Copied, Reproduced or Otherwise Used In Any Manner Not In the Best Interest of Perennial Energy, Inc. All Ideas and Concepts Remain the Property of Perennial Energy, Inc.

ENGINEERING SIGNATURES

DESIGNED BY: K.WADE DATE: 3/16/11
DRAWN BY: T.CREECH DATE: 3/16/11

UNLESS OTHERWISE SPEDIFIED
DIMENSIONS ARE IN INCHES
FRACT ±1/16 .XX ±.03 ANGLES ±0°30

TITLE: CSF TOP ASSEMBLY 4" AUX

SIZE D DWG. NO. PA-001-0675

MATERIAL: AS NOTED | SCALE: AS NOTED | FILE NO. PA-001-0675.dwg | SHEET 1 OF 1

9/13/2011 2:07:14 PM I:\ACADF\1601-1650\1641\PA-001-0675.dwg

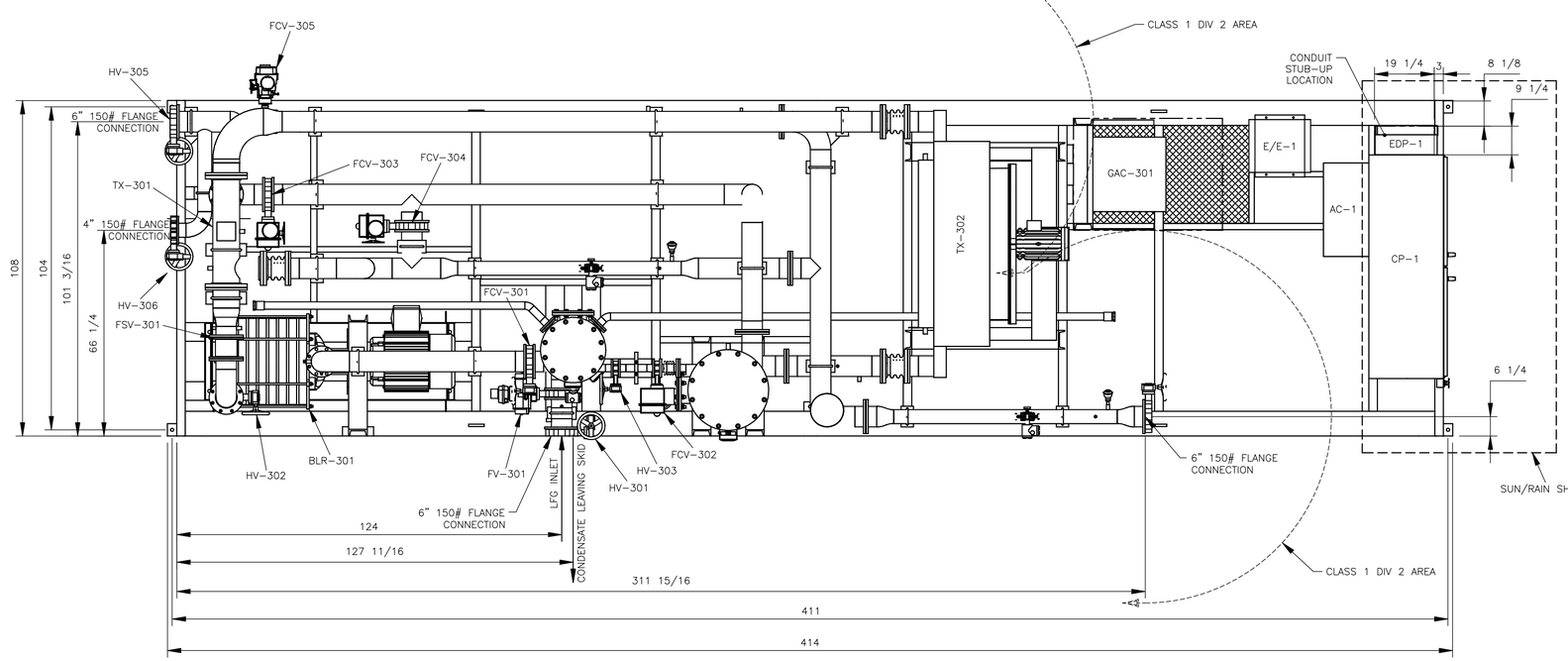

TOP VIEW

SCALE: 1=24

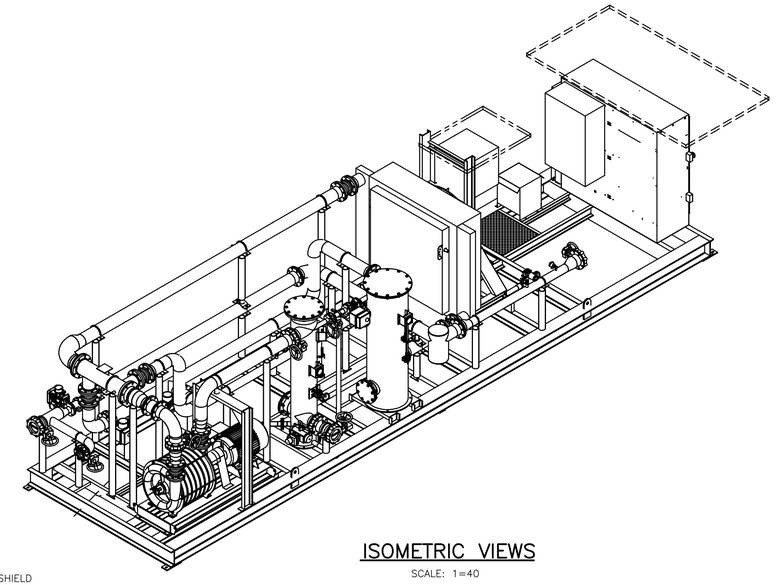

ISOMETRIC VIEWS

SCALE: 1=40

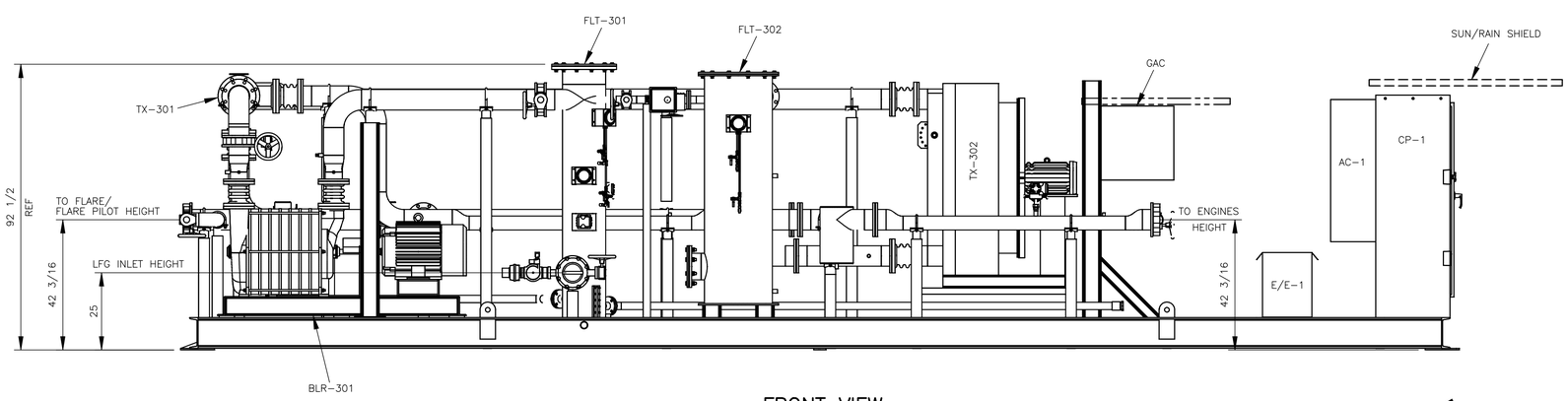

FRONT VIEW

SCALE: 1=24

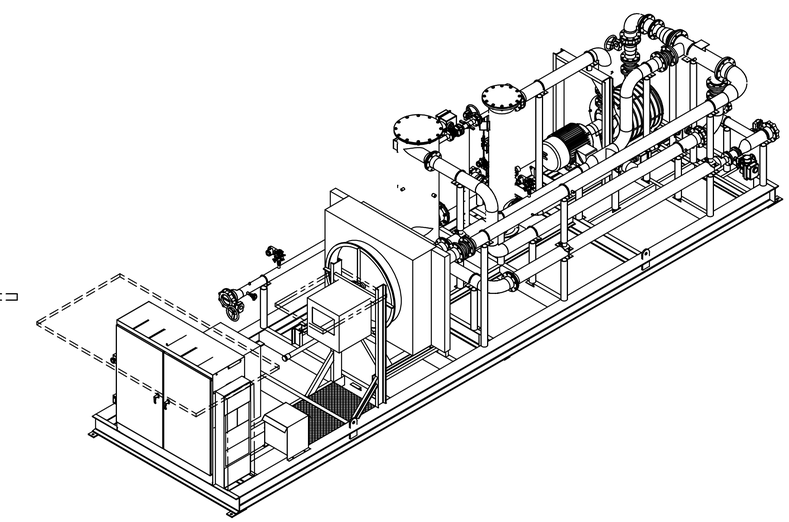

ACTUAL WEIGHT: 16,500 lbs.

REDUCED FROM ORIGINAL SIZE

LTR	DESCRIPTION	DATE	APPROVED
6	AS BUILT (9/13/11) SB		

REVISIONS

APPLICABLE JOB NO(S). 1641
BUNCOMBE CO

PEI PERENNIAL ENERGY
1375 COUNTY ROAD 8690
WEST PLAINS, MO 65775
www.PerennialEnergy.com

This Drawing Contains Proprietary Data and May Not Be Duplicated, Copied, Reproduced or Otherwise Used In Any Manner Not in the Best Interest of Perennial Energy, Inc. All Ideas and Concepts Remain the Property of Perennial Energy, Inc.

ENGINEERING SIGNATURES

DESIGNED BY:	DATE
K.WADE	7/23/10
DRAWN BY:	DATE
T.CREECH	7/23/10

UNLESS OTHERWISE SPECIFIED DIMENSIONS ARE IN INCHES

FRACT	.XX	ANGLES
±1/16	±.03	±0°30

TITLE: GAS COMPRESSION SYSTEM TOP ASSEMBLY

SIZE: D 34x22

DWG. NO. PA-001-0637

MATERIAL: AS NOTED

SCALE AS NOTED | FILE NO. PA-001-0637 R6.DWG | SHEET 1 OF 1

I:\ACAD\1601-1650\1641\PA-001-0637 R6.dwg, 11/18/2011 12:43:56 PM, DWG To PDF.pc3

(XX) REFERENCED PARTS

Part ID	Section	Drawing ID	RefDes	RefDesQty	UnitQty	TotalQty	Component	MFG / Material / Type	Description
4829	FLR	ME-010-0089	FLR-FCV-801.2	2 ea	1 ea	2 ea	Valve-Flow Control	Grainger	2F851 - Flow Control Valve, 1/4 male NPT x 1/4 female NPT, 150 psi max
5813	FLR	ME-010-0089	FLR-FLTP-302	1 ea	1 ea	1 ea	Filter	McMaster-Carr	4427K82, 1/4" NPT, High Flow
5814	FLR	ME-010-0089	FLR-FLTP-801.2	2 ea	1 ea	2 ea	Filter	McMaster-Carr	4427K81, 1/8" NPT, High flow
8067	FLR	ME-010-0089	FLR-FV-301	1 ea	1 ea	1 ea	Valve-Actuated Package	ABZ	6", 919-953-V, CI/SS/TEF, w/ Viton stem seal, w/ ABZ SR20-120V Electric Actuator, Spring Return, Nema 4/7
8068	FLR	ME-010-0089	FLR-FV-302	1 ea	1 ea	1 ea	Valve-Actuated Package	ABZ	4", 919-953-V, CI/SS/TEF, w/ Viton stem seal, w/ ABZ SR10-120V Electric Actuator, Spring Return, Nema 4/7
6476	FLR	ME-010-0089	FLR-FX-302	1 ea	1 ea	1 ea	Flex-Floating	Macken Industries, Inc.	FJ- 400B, 4" pipe, 7" DIA.L. w/hot dipped galvanized flanges
561	FLR	ME-010-0089	FLR-HVP-305..7	3 ea	1 ea	3 ea	Valve-Ball	Warren	1/4" NPT SS
735	FLR	ME-010-0089	FLR-PI-302	1 ea	1 ea	1 ea	Gauge-Pressure	Dwyer	Capsuhelic #4015LT, 0-15" WC
73	FLR	ME-010-0089	FLR-PI-302	1 ea	1 ea	1 ea	Mount-Gauge	Dwyer	A-370
7883	FLR	ME-010-0089	FLR-TSE-302	1 ea	1 ea	1 ea	Flame Arrester	Varec	5010-4-1 4" w/ 1/4" Test Ports, w/ 1/2" drain
7313	GCS	ME-010-0089	GCS-BLR-301	1 ea	1 ea	1 ea	Blower	Houston Service, Inc.	510B, CI heads and sections, aluminum impellers, 40 HP Premium efficiency motor/ VFD compatible, add 416 SS shaft, add ASMT PTC-10 test, Per PEI Job # 1641, ref. data sheet 41167., AUE Sand
5511	GCS	ME-010-0089	GCS-FCV-301	1 ea	1 ea	1 ea	Valve-Butterfly	ABZ	6", 919-953, CI/SS/TEF, gear-op w/handwheel
7833	GCS	ME-010-0089	GCS-FCV-302	1 ea	1 ea	1 ea	Valve-Actuated Package	ABZ	2", 919-953-ISD, CI/SS/TEF, w/Elomatic EL100-MDD-XP, electric actuator,120V, w/MDD card (4mA-Open, 20mA-Closed), Nema 7
7382	GCS	ME-010-0089	GCS-FCV-303.4	2 ea	1 ea	2 ea	Valve-Actuated Package	ABZ	6", 919-953-001, CI/SS/TEF, w/ Elomatic ELQ200-9.6-QMDD-XP, 4-20 mA, NEMA 7
7246	GCS	ME-010-0089	GCS-FCV-305	1 ea	1 ea	1 ea	Valve-Ball-Actuated	Flowserve	3" Flowserve NAF-Setball Sector Valve, SS flange type, SS body, w/ Elomatic ELQ100-9.6-QMDD, 4-20 mA, NEMA 7
5654	GCS	ME-010-0089	GCS-FCV-701,4.6	4 ea	1 ea	4 ea	Valve-Globe	Sharpe	40276, 1/2", SS
5826	GCS	ME-010-0089	GCS-FCV-702..3	2 ea	1 ea	2 ea	Valve-Globe	Sharpe	40276, 3/4", SS
4781	GCS	ME-010-0089	GCS-FE-301.2	2 ea	1 ea	2 ea	Flow Element	Veris	V100-4" SCH 10-05-H-M, Integral manifold
5813	GCS	ME-010-0089	GCS-FLTP-301.6	6 ea	1 ea	6 ea	Filter	McMaster-Carr	4427K82, 1/4" NPT, High Flow
5201	GCS	ME-010-0089	GCS-FSV-301	1 ea	1 ea	1 ea	Valve-Check	Technocheck	6? EHF AL AL V 32 050 FF, Flanged, Al body, Al internals, Viton seal, 302SS spring
7837	GCS	ME-010-0089	GCS-FV-301	1 ea	1 ea	1 ea	Valve-Actuated Package	ABZ	6", 919-953-001, CI/SS/TEF, w/Elomatic EL350 electric actuator,120V,On/Off
6471	GCS	ME-010-0089	GCS-FX-301	1 ea	1 ea	1 ea	Flex-Floating	Macken Industries, Inc.	FJ- 500B, 5" pipe, 8" DIA.L., w/ drop in liner, w/hot dipped galvanized flanges
6053	GCS	ME-010-0089	GCS-FX-302	1 ea	1 ea	1 ea	Flex-Floating	Macken Industries, Inc.	FJ- 500B, 5" pipe, 8" DIA.L., w/hot dipped galvanized flanges
6775	GCS	ME-010-0089	GCS-FX-303.6	4 ea	1 ea	4 ea	Flex-Floating	Macken Industries, Inc.	FJ- 600B, 6" pipe, 8" DIA.L. w/hot dipped galvanized flanges
2572	GCS	ME-010-0089	GCS-FX-307	1 ea	1 ea	1 ea	Flex-Floating	McMaster-Carr	9413K61, Stainless Steel, 2" Slp flange x Slp Flange (Cat. 107 pg. 74)
7567	GCS	ME-010-0089	GCS-GAC-301	1 ea	1 ea	1 ea	Gas Analyzer	Siemens	Siemens Analyzer Model 23, 0-25% O2, 0-100% CH4, Sample Pressure @ 5 psig, Vent Pressure @ -45 In W.C., Job # 1641
1271	GCS	ME-010-0089	GCS-HT-1	6 ea	1 ea	6 ea	End Seal Kit	Raychem	PMKG-LE
2894	GCS	ME-010-0089	GCS-HT-1	3 ea	1 ea	3 ea	Glass Tape	Raychem	GS-54, for SS piping
1270	GCS	ME-010-0089	GCS-HT-1	1 ea	150 ft	150 ft	Heat Trace	Raychem	5BTV1
2816	GCS	ME-010-0089	GCS-HT-1	1 ea	1 ea	1 ea	Power Connection Box	Raychem	JBM-100-A, 3 circuit
1274	GCS	ME-010-0089	GCS-HT-1	5 ea	1 ea	5 ea	Tee Kit	Raychem	PMKG-LT
5511	GCS	ME-010-0089	GCS-HV-301.2	2 ea	1 ea	2 ea	Valve-Butterfly	ABZ	6", 919-953, CI/SS/TEF, gear-op w/handwheel
7385	GCS	ME-010-0089	GCS-HV-303	1 ea	1 ea	1 ea	Valve-Butterfly	ABZ	2", 919-953, CI/SS/TEF, gear-op w/chainwheel
5511	GCS	ME-010-0089	GCS-HV-304..5	2 ea	1 ea	2 ea	Valve-Butterfly	ABZ	6", 919-953, CI/SS/TEF, gear-op w/handwheel
7834	GCS	ME-010-0089	GCS-HV-306	1 ea	1 ea	1 ea	Valve-Butterfly	ABZ	4", 919-953, CI/SS/TEF, gear-op w/handwheel
561	GCS	ME-010-0089	GCS-HV-307..9	3 ea	1 ea	3 ea	Valve-Ball	Warren	1/4" NPT SS
3064	GCS	ME-010-0089	GCS-HV-701	1 ea	1 ea	1 ea	Valve-Ball	Hayward	TB2200ST, 2", CPVC/VITON
4956	GCS	ME-010-0089	GCS-HV-702..4	3 ea	1 ea	3 ea	Valve-Ball	Apollo	76F-104, 3/4" NPT, SS, full port
561	GCS	ME-010-0089	GCS-HV-705	1 ea	1 ea	1 ea	Valve-Ball	Warren	1/4" NPT SS
561	GCS	ME-010-0089	GCS-HVP-301.24	24 ea	1 ea	24 ea	Valve-Ball	Warren	1/4" NPT SS
561	GCS	ME-010-0089	GCS-HVP-701.2	2 ea	1 ea	2 ea	Valve-Ball	Warren	1/4" NPT SS
2818	GCS	ME-010-0089	GCS-INS-1	4 ea	1 gal	4 gal	All Weather Mastic	Childers	CP-11, white mastic, spray/brush, all weather
5288	GCS	ME-010-0089	GCS-INS-1	4 ea	1 ea	4 ea	Glass Fiber Mesh	Generic	Fiberglass Mesh Tape, 300' x 1 7/8"
5810	GCS	ME-010-0089	GCS-INS-1	2 ea	1 ea	2 ea	Insulation	McMaster-Carr	4463K132, 1/2" tube,1/2" THK, 6ft tube
5049	GCS	ME-010-0089	GCS-INS-1	3 ea	1 ea	3 ea	Insulation	McMaster-Carr	4463K142, 2 3/8" tube,1/2" THK, 6ft tube
5289	GCS	ME-010-0089	GCS-INS-1	3 ea	1 ea	3 ea	Insulation	McMaster-Carr	4463K133, 5/8" tube,1/2" THK, 6ft tube
1332	GCS	ME-010-0089	GCS-INS-1	1 ea	100 sqft	100 sqft	Insulation	Rubatex	1" THK Rubber Insulation, R-1800-FS
6663	GCS	ME-010-0089	GCS-LS-701..3	3 ea	1 ea	3 ea	Level Switch	Flowline	LU10-1305, Intrinsically Safe Switch-Tek Ultrasonic Level Switch, 10ft cable
575	GCS	ME-010-0089	GCS-PDI-301.2	2 ea	1 ea	2 ea	Gauge-Pressure	Dwyer	Capsuhelic #4006LT, 0-6" WC
73	GCS	ME-010-0089	GCS-PDI-301.2	2 ea	1 ea	2 ea	Mount-Gauge	Dwyer	A-370
6811	GCS	ME-010-0089	GCS-PDT-301.2	2 ea	1 ea	2 ea	Transmitter-Pressure	Rosemount	2051CD1A02A1AB2E5H2D4Q4, 4-20 mA, Calibrate 0- 4" WC
75	GCS	ME-010-0089	GCS-PI-301	1 ea	1 ea	1 ea	Gauge-Pressure	Dwyer	Capsuhelic #4080LT, 0-80" WC
73	GCS	ME-010-0089	GCS-PI-301.2	2 ea	1 ea	2 ea	Mount-Gauge	Dwyer	A-370
1073	GCS	ME-010-0089	GCS-PI-302.3	2 ea	1 ea	2 ea	Gauge-Pressure	Dwyer	Capsuhelic #4210LT, 0-10 psi
1176	GCS	ME-010-0089	GCS-PI-303	1 ea	1 ea	1 ea	Mount-Gauge	Dwyer	A-371
7353	GCS	ME-010-0089	GCS-PIT-301	1 ea	1 ea	1 ea	Transmitter-Pressure	Rosemount	2051CD2A02A1AB2E5M5H2D4Q4, 4-20 mA, Calibrate 0- 80" WC, Display with Engineering Units
7354	GCS	ME-010-0089	GCS-PIT-302..3	2 ea	1 ea	2 ea	Transmitter-Pressure	Rosemount	2051CD3A02A1AB2E5M5H2D4Q4, 4-20 mA, Calibrate 0- 10 PSI, Display with Engineering Units
1275	GCS	ME-010-0089	GCS-TC-1	1 ea	1 ea	1 ea	Thermostat	Raychem	AMC-1H, for Hazardous Locations
6233	GCS	ME-010-0089	GCS-TI-301	1 ea	1 ea	1 ea	Temperature Indicator	Winters	TS0040-B8, 0-250°F/-20-120°C, 5" Dial, 4" stem
7142	GCS	ME-010-0089	GCS-TIT-301..5	5 ea	1 ea	5 ea	Transmitter-Temperature	Rosemount	644HAE5XAJ6M5F6Q4, 0-300 deg F, Aluminum head, SMART, Explosion Proof, with 0183N13E2N00A040T32E5XA, 4" long, E-type T/C, 1/2" connection, w/Thermowell
7397	GCS	ME-010-0089	GCS-TX-301	1 ea	1 ea	1 ea	Heat Exchanger	ITT	C200 08036, Shell & Tube Heat Exchanger, Per Quote No 145351 Rev 1, TX-301 Job 1641
7329	GCS	ME-010-0089	GCS-TX-302	1 ea	1 ea	1 ea	Heat Exchanger	Air-X-Limited	48VVF, 3HP TEFC VFD compatible motor, 6" inlet & outlet, w/ aluminum discharge shutters, w/ 304 SS for all materials in contact with process gas, Per proposal #108301B.
6721	GCS	ME-010-0089	GCS-VT-1	1 ea	1 ea	1 ea	Cable	IMI Sensors	052BR010BZ, Polyurethane cable, composite 2-socket MIL to blunt cut, 10'
6652	GCS	ME-010-0089	GCS-VT-1	1 ea	1 ea	1 ea	Vibration Mounting Adapter	STI	CMCP-203-01, 1/2" NPT Pipe Thread Mounting Adapter - 1/4" x 28
6771	GCS	ME-010-0089	GCS-VT-1	1 ea	1 ea	1 ea	Vibration Transmitter	IMI Sensors	640B01, 4-20mA, 0-1 in/sec

REDUCED FROM ORIGINAL SIZE

PID LOOPS * CALCULATED TOTAL MASS FLOWRATE

LOOP #	NAME	CONTROLLED ELEMENT	CONTROLLER, OUTPUT ELEMENT	PROCESSES VARIABLE, UNITS	PV SENSOR
1	LANDFILL VACUUM CONTROL	FCV-301	PLC, AO1-CH4	LANDFILL VACUUM, IN WC	GCS-PT-301
2	LANDFILL FLOW CONTROL	FCV-301	PLC, AO1-CH4	LFG FLOW, SCFM	PDT-301, PDT-302*
3	DISCHARGE PRESSURE CONTROL	VFD-1/M1	PLC, AO1-CH1	DISCHARGE PRESSURE, InWC	PT-303
4	AFTERCOOLER DISCHARGE TEMP CONTROL	VFD-2/M2	PLC, AO1-CH2	AFTERCOOLER DISCHARGE GAS TEMP, °F	TE-304
5	DELIVERY GAS TEMP CONTROL	FCV-303..4	PLC, AO1-CH3	DELIVERY TEMP, °F	TE-305
6	FLARE PRESSURE CONTROL	ZC-301	PLC, AO1-CH5	FLARE PRESSURE, InWC	FLR-PT-301

CONTROL PANEL MOUNTED LOGIC ELEMENTS

LAL 1 — REFERENCE DESIGNATORS OF LOGIC OR CONTROL PANEL MOUNTED EQUIPMENT. IDENTIFICATION LETTERS CONFORM TO ISA'S INSTRUMENTATION SYMBOLS AND IDENTIFICATION MANUAL TABLE #1

MANUAL VALVES ARE NORMALLY OPEN DURING SYSTEM OPERATION UNLESS DESIGNATED BY "NC"

LTR	DESCRIPTION	DATE	APPROVED
3	AS BUILT (9/13/11) SB		

REVISIONS

APPLICABLE JOB NO(S). 1641
BUNCOMBE CO

PEI PERENNIAL ENERGY
1375 COUNTY ROAD 8690
WEST PLAINS, MO 65775
www.PerennialEnergy.com

This Drawing Contains Proprietary Data and May Not Be Duplicated, Copied, Reproduced or Otherwise Used In Any Manner Not in the Best Interest of Perennial Energy, Inc. All Ideas and Concepts Remain the Property of Perennial Energy, Inc.

ENGINEERING SIGNATURES

DESIGNED BY: K.WADE DATE 7/16/10
DRAWN BY: A.PARKER/TFC/SMB DATE 7/16/10

UNLESS OTHERWISE SPECIFIED DIMENSIONS ARE IN INCHES
FRACT ±1/16 .XX ±.03 ANGLES ±0°30'

TITLE
GAS COMPRESSION SYSTEM P&ID

SIZE D 34x22
DWG. NO. ME-010-0089

MATERIAL: AS NOTED
SCALE AS NOTED
FILE NO. ME-010-0089 R3.DWG
SHEET 3 OF 3

I:\ACAD\1601-1650\1641\ME-010-0089 R3.dwg, 9/13/2011 1:02:21 PM, steve

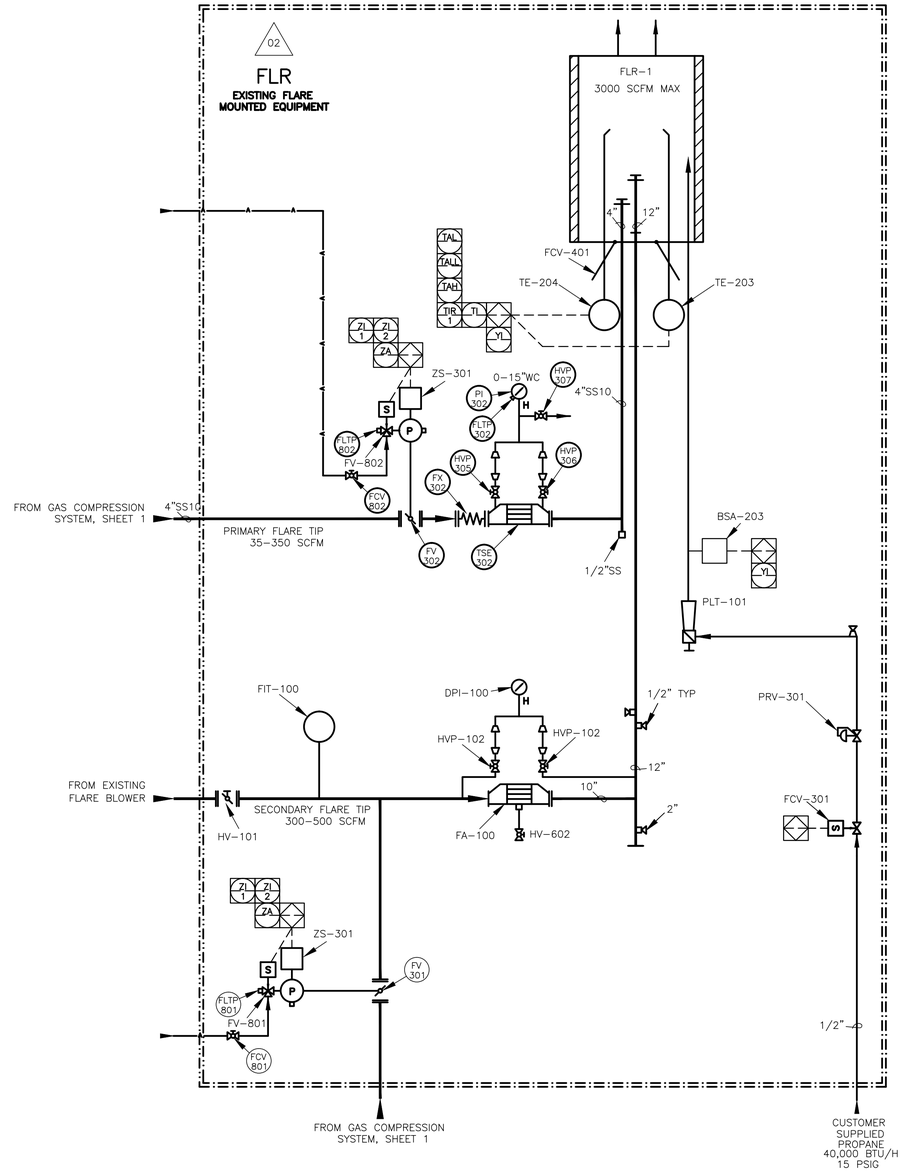

REDUCED FROM ORIGINAL SIZE

PID LOOPS

LOOP #	NAME	CONTROLLED ELEMENT	CONTROLLER, OUTPUT ELEMENT	PROCESS VARIABLE, UNITS	PV SENSOR
1	LANDFILL VACUUM CONTROL	FCV-301, FCV-302	PLC, AO1-CH1	LANDFILL VACUUM, IN/WC	PT-301
2	LANDFILL FLOW CONTROL	FCV-301, FCV-302	PLC, AO1-CH1	FLARE FLOW RATE, SCFM	PDT-301, PLC MASS FLOW CALC
3	PRESSURE CONTROL	VFD-301, VFD-302	PLC, AO1-CH1	BLOWER DISCHARGE PRESSURE, IN WC	PT-302

CONTROL PANEL MOUNTED LOGIC ELEMENTS

AL 1 — REFERENCE DESIGNATORS OF LOGIC OR CONTROL PANEL MOUNTED EQUIPMENT. IDENTIFICATION LETTERS CONFORM TO ISA'S INSTRUMENTATION SYMBOLS AND IDENTIFICATION MANUAL TABLE #1

MANUAL VALVES ARE NORMALLY OPEN DURING SYSTEM OPERATION UNLESS DESIGNATED BY "NC"

AL: ALUMINUM
BI: BLACK IRON
CI: CAST IRON
CS: CARBON STEEL
CPVC: CHLOROPOLYVINYLCHLORIDE
SS: STAINLESS STEEL
EPDM: ETHYLENE PROPYLENE DIENE MONOMER
FRP: FIBERGLASS REINFORCED PLASTIC

10: SCH 10 PIPE
40: SCH 40 PIPE
80: SCH 80 PIPE
H: I.D. HOSE
T: O.D. TUBING

(EXAMPLE: 6"AL40 = 6" ALUMINUM SCHEDULE 40 PIPE)

ELECTRICAL CONNECTIONS
MAIN PIPING
SUB PIPING
AIR LINE
CONDENSATE LINE
CUSTOMER SUPPLIED MAIN PIPING
CUSTOMER SUPPLIED SUB PIPING
LOCATION BORDER
FUTURE/PENDING PIPING BORDER

Fluid Designators

Ref Des	Fluid
1XX	Fossil Fuels
2XX	Oils
3XX	Biogas
4XX	Air
5XX	Combustion Exhaust
6XX	Coolants
7XX	Condensate
8XX	Inert Gases
9XX	Digester Fluids

LTR	DESCRIPTION	DATE	APPROVED
3	AS BUILT (9/13/11) SB		

REVISIONS

APPLICABLE JOB NO(S). 1641
BUNCOMBE CO

PERENNIAL ENERGY
1375 COUNTY ROAD 8690
WEST PLAINS, MO 65775
www.PerennialEnergy.com

This Drawing Contains Proprietary Data and May Not Be Duplicated, Copied, Reproduced or Otherwise Used In Any Manner Not in the Best Interest of Perennial Energy, Inc. All Ideas and Concepts Remain the Property of Perennial Energy, Inc.

ENGINEERING SIGNATURES

DESIGNED BY: K.WADE DATE 7/16/10
DRAWN BY: A.PARKER/TFC/SMB DATE 7/16/10

UNLESS OTHERWISE SPECIFIED DIMENSIONS ARE IN INCHES
FRACT ±1/16 .XX ±.03 ANGLES ±0°30

TITLE
GAS COMPRESSION SYSTEM P&ID

SIZE D 34x22
DWG. NO. ME-010-0089

MATERIAL: AS NOTED
SCALE AS NOTED
FILE NO. ME-010-0089 R3.DWG
SHEET 2 OF 3

I:\ACAD\PLUS\1-1650\1641\ME-010-0089-R3.dwg, 9/13/2011 10:50:56 AM, steve

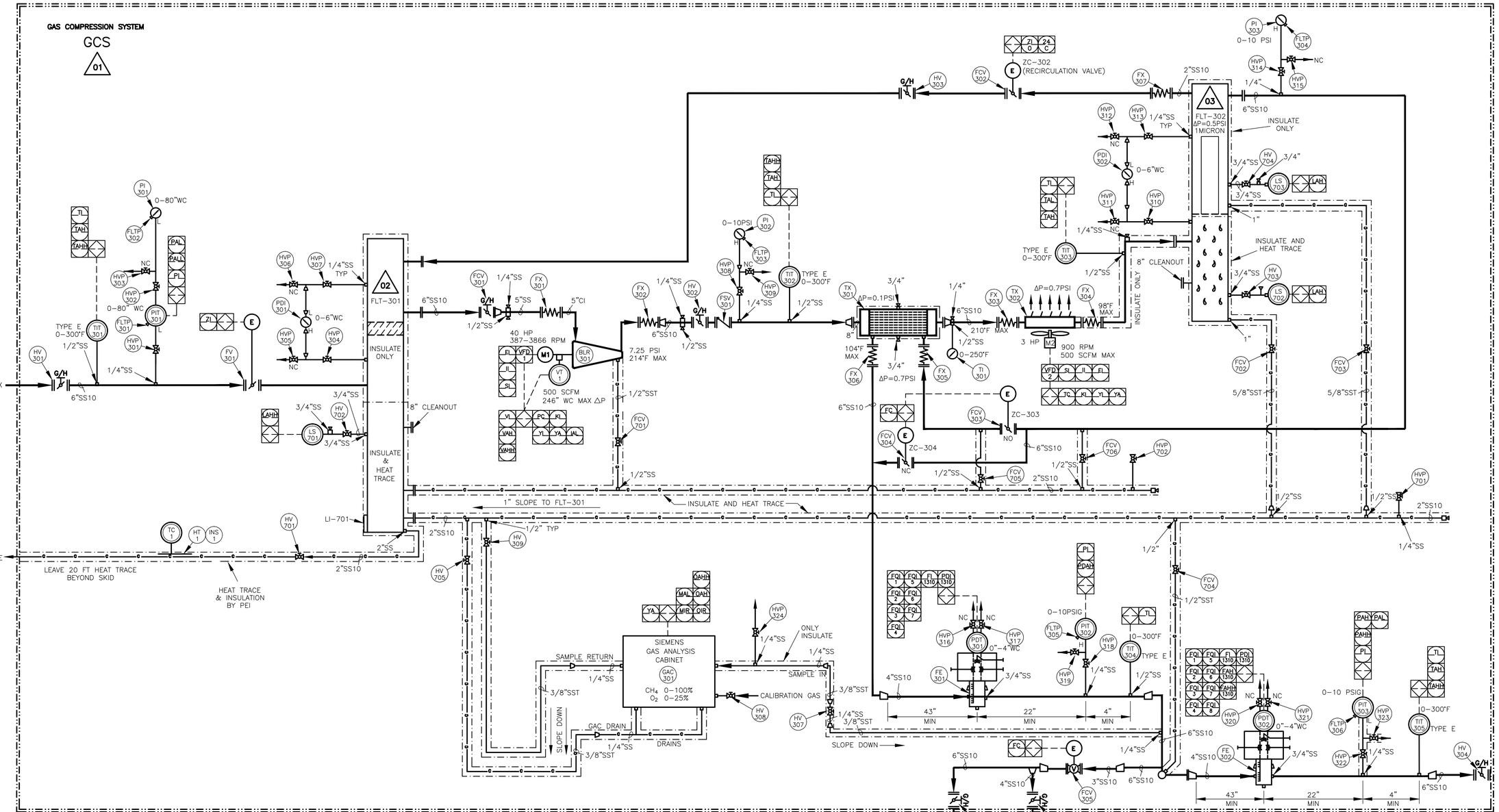

WELDING PROCEDURE MUST CONFORM TO ASME SECTION 1X
SYSTEM AREA CLASSIFICATION: CLASS 1, DIVISION 2

LTR	DESCRIPTION	DATE	APPROVED
3	AS BUILT (9/13/11) SB		

REVISIONS

APPLICABLE JOB NO(S). 1641
BUNCOMBE CO

PERENNIAL ENERGY
1375 COUNTY ROAD 8690
WEST PLAINS, MO 65775
www.PerennialEnergy.com

This Drawing Contains Proprietary Data and May Not Be Duplicated, Copied, Reproduced or Otherwise Used In Any Manner Not in the Best Interest of Perennial Energy, Inc. All Ideas and Concepts Remain the Property of Perennial Energy, Inc.

ENGINEERING SIGNATURES	DATE
DESIGNED BY: K.WADE	7/16/10
DRAWN BY: A.PARKER/TFC/SMB	7/16/10

UNLESS OTHERWISE SPECIFIED DIMENSIONS ARE IN INCHES
FRACT ±1/16 .XX ±.03 ANGLES ±0°30'

TITLE: GAS COMPRESSION SYSTEM P&ID

SIZE D 34x22 | DWG. NO. ME-010-0089

MATERIAL: AS NOTED | SCALE AS NOTED | FILE NO. ME-010-0089 R3.DWG | SHEET 1 OF 3

PIPING MATERIALS LEGEND

AL:	ALUMINUM	10:	SCH 10 PIPE
BI:	BLACK IRON	40:	SCH 40 PIPE
CI:	CAST IRON	80:	SCH 80 PIPE
CS:	CARBON STEEL	H:	I.D. HOSE
CPVC:	CHLOROPOLYVINYLCHLORIDE	T:	O.D. TUBING
SS:	STAINLESS STEEL		
EPDM:	ETHYLENE PROPYLENE DIENE MONOMER		
FRP:	FIBERGLASS REINFORCED PLASTIC		

(EXAMPLE: 6"AL40 = 6" ALUMINUM SCHEDULE 40 PIPE)

Fluid Designators

Ref Des	Fluid
1XX	Fossil Fuels
2XX	Oils
3XX	Biogas
4XX	Air
5XX	Combustion Exhaust
6XX	Coolants
7XX	Condensate
8XX	Inert Gases
9XX	Digester Fluids

LINES LEGEND

- ELECTRICAL CONNECTIONS
- MAIN PIPING
- SUB PIPING
- AIR LINE
- CONDENSATE LINE
- CUSTOMER SUPPLIED MAIN PIPING
- CUSTOMER SUPPLIED SUB PIPING
- LOCATION BORDER
- FUTURE/PENDING PIPING BORDER

E:\ACAD\P\1601-1650\1641\ME-010-0089 R3.dwg, 9/13/2011 2:24:55 PM, steve

FOR MORE DETAIL ON PEI CONTROL PANEL TERMINAL CONNECTIONS REFER TO DWG #EE-005-0342

TEMINAL BLOCKS ARE NOT SHOWN IN ACTUAL PHYSICAL LOCATION. ORDER IS ONLY SHOWN FOR CLARITY.

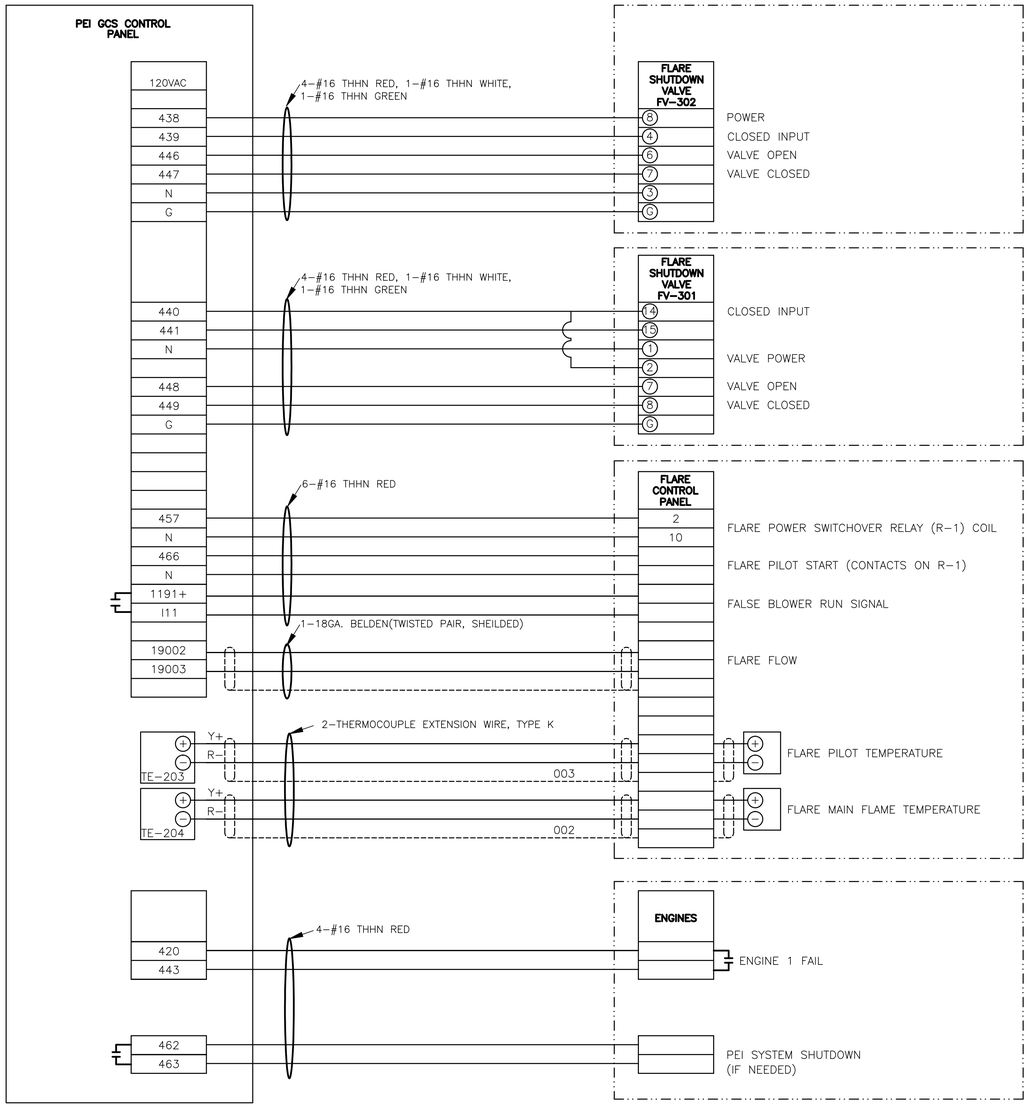

NOTES:

1. CONTRACTOR TO SUPPLY ALL CONDUIT, WIRE AND CABLES BETWEEN CP-1 AND THE SWG, GEN, FLARE, FLARE VALVE, GAC, SCADA, AND THE DEVICES NOT WIRED AT PEI.
2. CONTRACTOR TO LAND THE WIRES AND CABLES ON TERMINAL STRIPS IN CP-1 AND THE JB-HV, JB-LV, AND THE DEVICES ACCORDING TO THIS DRAWING.
3. GROUND THE SHIELD ON THE CABLES AT ONE END ONLY.
4. THE 480 VAC, 120 VAC, AND 24 VDC WIRING MUST BE RUN IN SEPARATE CONDUIT.
5. THE NUMBER, SIZE AND ROUTING OF THE CONDUIT LEAVING CP-1, TO BE DETERMINED BY THE CONTRACTOR.
6. (0 SYMBOL FOR CONDUIT, # OF WIRES IN CONDUIT.)

PRELIMINARY FOR REVIEW/INFO. ONLY
PERENNIAL ENERGY, INC.

REDUCED FROM ORIGINAL SIZE

LTR	DESCRIPTION	DATE	APPROVED
0			

REVISIONS

APPLICABLE JOB NO(S). 1641
BUNCOMBE CO

PEI PERENNIAL ENERGY
1375 COUNTY ROAD 8690
WEST PLAINS, MO 65775
www.PerennialEnergy.com

This Drawing Contains Proprietary Data and May Not Be Duplicated, Copied, Reproduced or Otherwise Used In Any Manner Not in the Best Interest of Perennial Energy, Inc. All Ideas and Concepts Remain the Property of Perennial Energy, Inc.

ENGINEERING SIGNATURES

	DATE
DESIGNED BY: K.WADE	10/4/11
DRAWN BY: S.BIRKEMEIER	10/4/11

UNLESS OTHERWISE SPECIFIED DIMENSIONS ARE IN INCHES

FRACT	.XX	ANGLES
±1/16	±.03	±0°30

TITLE
INTERCONNECTION WIRING DIAGRAM

SIZE D 34x22
DWG. NO. EE-018-0129

MATERIAL: AS NOTED
SCALE AS NOTED
FILE NO. EE-018-0129 R0.DWG
SHEET 1 OF 1

I:\ACAD\1601-1605\1641\EE-018-0129 R0.dwg, 10/4/2011 4:02:45 PM, DWG To PDF.pc3

(XX) REFERENCED PARTS

Part ID	Section	Drawing ID	RefDes	RefDesQty	UnitQty	TotalQty	Component	MFG / Material / Type	Description
969	CP	EE-005-0342	CP-AI-1..3	3 ea	1 ea	3 ea	Analog Input Module	Koyo	F2-08AD-1, 8 inputs, 4-20ma
3583	CP	EE-005-0342	CP-AO-1	1 ea	1 ea	1 ea	Analog Output Module	Koyo	F2-08DA-1, 8 outputs, 4-20ma
7098	CP	EE-005-0342	CP-CBL-3	1 ea	1 ea	1 ea	Cable-Ethernet	Generic	RJ45, straight CAT5, 120' long
5202	CP	EE-005-0342	CP-CBL-4	1 ea	1 ea	1 ea	Cable-Modem	Communication Cable Co.	PP-043-0007, 5FT - HD15 Male to DB9 Male
7096	CP	EE-005-0342	CP-CBL-5	1 ea	1 ea	1 ea	Cable-Ethernet	Generic	RJ45, straight CAT5, 36' long
3057	CP	EE-005-0342	CP-CBL-6	1 ea	1 ea	1 ea	Expansion Cable	Koyo	D2-EXCBL-1, 1 meter, for D2-EM
3055	CP	EE-005-0342	CP-CM-1	1 ea	1 ea	1 ea	Remote Master	Koyo	D2-CM
4386	CP	EE-005-0342	CP-CDM-1	1 ea	1 ea	1 ea	Ethernet Communications module	Koyo	H2-ECOM100
446	CP	EE-005-0342	CP-DI-1	1 ea	1 ea	1 ea	Digital Input Module	Koyo	D2-16NA, 16 points
4712	CP	EE-005-0342	CP-DI-2	1 ea	1 ea	1 ea	Digital Input Module	Koyo	D2-08ND3, 8 points, 24V DC Input
1702	CP	EE-005-0342	CP-E/E-1	1 ea	1 ea	1 ea	Power Supply	IDEC	PSSR-E24, 100W, 24V
3056	CP	EE-005-0342	CP-EM-1..2	2 ea	1 ea	2 ea	Remote Slave	Koyo	D2-EM
7847	CP	EE-005-0342	CP-ES-1	1 ea	1 ea	1 ea	Ethernet Switch	Koyo	SE-SW5U-WT, 5-Port Ethernet switch, wide temp range
3109	CP	EE-005-0342	CP-EXP-1	1 ea	1 ea	1 ea	Base	Koyo	D2-06B-1, 6 Slot Base
788	CP	EE-005-0342	CP-FILL-1..4	4 ea	1 ea	4 ea	Filler Module	Koyo	D2-FILL
5777	CP	EE-005-0342	CP-FU-1..15	15 ea	1 ea	15 ea	Fuse	Bussmann	ABC-3, 3A, ceramic, fast acting, 1.25" x .25"
1294	CP	EE-005-0342	CP-FUH-1..15	15 ea	1 ea	15 ea	Fuse Holder	Automation Direct	DN-F6LI10
450	CP	EE-005-0342	CP-HS-1	2 ea	1 ea	2 ea	Contact Block	Cutler-Hammer	10250T2
4215	CP	EE-005-0342	CP-HS-1	1 ea	1 ea	1 ea	Selector Switch	Cutler-Hammer	10250T1311, 2 Position Maintained, 60° Throw, Black
451	CP	EE-005-0342	CP-HS-10	1 ea	1 ea	1 ea	Push Button	Cutler-Hammer	10250T23B, Flush, Black, 1 NO
5949	CP	EE-005-0342	CP-HS-11	1 ea	1 ea	1 ea	Emergency Stop Switch	Cutler-Hammer	10250T-5J63-33X
448	CP	EE-005-0342	CP-HS-2..4,8,9	5 ea	1 ea	5 ea	Selector Switch	Cutler-Hammer	10250T21KB
447	CP	EE-005-0342	CP-HS-6..7	2 ea	1 ea	2 ea	Selector Switch	Cutler-Hammer	10250T20KB
3352	CP	EE-005-0342	CP-HTR-1	1 ea	1 ea	1 ea	Panel Heater	Hoffman	D-AH8001B, 115 V, 800 Watt, 6.5 amps
666	CP	EE-005-0342	CP-HTR-2	1 ea	1 ea	1 ea	Panel Heater	Hoffman	D-AH4001B, 115 V, 400 Watt, 3.3 amps
4096	CP	EE-005-0342	CP-I/I-1..2	2 ea	1 ea	2 ea	Signal Conditioner/Isolator	Automation Direct	FC-11, 4-20 mA, input/output
453	CP	EE-005-0342	CP-LMP-1..2	2 ea	1 ea	2 ea	Panel Lamp	American Flourescent	2V692
454	CP	EE-005-0342	CP-LMP-3	1 ea	1 ea	1 ea	Lens-Green	Cutler-Hammer	10250TC14N
455	CP	EE-005-0342	CP-LMP-3.4	2 ea	1 ea	2 ea	Lamp	Cutler-Hammer	10250T23IN, 120 VAC
456	CP	EE-005-0342	CP-LMP-4	1 ea	1 ea	1 ea	Lens-Red	Cutler-Hammer	10250TC13N
1229	CP	EE-005-0342	CP-LMP-5	1 ea	1 ea	1 ea	Alarm Beacon	Federal Signal	Model 225, 120VAC, Red
3418	CP	EE-005-0342	CP-MDI-1	1 ea	1 ea	1 ea	Modem	Automation Direct	MDM-TEL, industrial,with Null Modem Adaptor
62	CP	EE-005-0342	CP-NBK,GBK-1	1 ea	1 ea	1 ea	Block	Square D	PK18GTA-1
63	CP	EE-005-0342	CP-NBK-1	1 ea	1 ea	1 ea	Isolator-Neutral	Square D	PKGTAB
673	CP	EE-005-0342	CP-PH-1	1 ea	1 ea	1 ea	Phone	Generic	Wall, UL listed
3101	CP	EE-005-0342	CP-PLC-1	1 ea	1 ea	1 ea	Base	Koyo	D2-09B-1, 9 Slot Base
3592	CP	EE-005-0342	CP-PLC-1	1 ea	1 ea	1 ea	CPU	Koyo	D2-260
462	CP	EE-005-0342	CP-PLC-1	1 ea	1 ea	1 ea	CPU Battery	Koyo	D2-BAT-1
7046	CP	EE-005-0342	CP-PT-401	1 ea	1 ea	1 ea	Transmitter-Pressure	Global Water Instrumentation	WL100, Barometric Pressure Transmitter
1293	CP	EE-005-0342	CP-R-1	1 ea	1 ea	1 ea	Relay	IDEC	RR3PA-ULAC120V, 3PDT, w/led on indicator
1433	CP	EE-005-0342	CP-R-1	1 ea	1 ea	1 ea	Relay Base	IDEC	SR3P-06, 11 pin socket
4868	CP	EE-005-0342	CP-R-2..3	2 ea	1 ea	2 ea	Relay	IDEC	RR2P-ULAC120V, w/led on indicator
2358	CP	EE-005-0342	CP-R-2..3	2 ea	1 ea	2 ea	Relay Base	IDEC	SR2P-06, 8 pin socket
465	CP	EE-005-0342	CP-RCP-1	1 ea	1 ea	1 ea	Cover	Killark	WCEG
466	CP	EE-005-0342	CP-RCP-1..2	2 ea	1 ea	2 ea	Receptacle-GFCI	PNS	120V P/N: 209115
467	CP	EE-005-0342	CP-RCP-1..3	3 ea	1 ea	3 ea	Box	Generic	BWFB75
3999	CP	EE-005-0342	CP-RCP-2	1 ea	1 ea	1 ea	Cover	Leviton or Equal	Generic white plastic receptacle cover(DUPLEX)
683	CP	EE-005-0342	CP-RCP-3	1 ea	1 ea	1 ea	Phone Receptacle	Generic	Double RJ11
468	CP	EE-005-0342	CP-RM-1..2	2 ea	1 ea	2 ea	Relay Module	Koyo	F2-08TRS, 8 commons, 8 outputs,no fuse
469	CP	EE-005-0342	CP-SSR-2	1 ea	1 ea	1 ea	Surge Arrester	MCG	#415, 120V, 15A
470	CP	EE-005-0342	CP-SSR-3	1 ea	1 ea	1 ea	Surge Arrester	MCG	MCG-24A, 24VDC, 15A
471	CP	EE-005-0342	CP-SSR-4	1 ea	1 ea	1 ea	Surge Arrester	MCG	DLP-4.71-200, RJ11
343	CP	EE-005-0342	CP-TE-401	1 ea	1 ea	1 ea	Thermocouple	Omega	WTE-10-12
4078	CP	EE-005-0342	CP-TT-1..3	3 ea	1 ea	3 ea	Transmitter-Temperature	Automation Direct	FC-T1, Isolated 4-20 mA
6562	CP	EE-005-0342	CP-YIC-1	1 ea	1 ea	1 ea	Flash Drive	Automation Direct	SDCZ4-2048-A10, Sandisk Cruzer Micro, 2GB, USB connection
6910	CP	EE-005-0342	CP-YIC-1	1 ea	1 ea	1 ea	Touchscreen	Koyo	EA7-T6CL, 6' COLOR, C-more, TFT, LCD Display

REDUCED FROM ORIGINAL SIZE

LTR	DESCRIPTION	DATE	APPROVED
6	AS FIELD MODIFIED (10/3/11) TC		

REVISIONS

APPLICABLE JOB NO(S). 1641
BUNCOMBE CO

PERENNIAL ENERGY
1375 COUNTY ROAD 8890
WEST PLAINS, MO 65775
www.PerennialEnergy.com

This Drawing Contains Proprietary Data and May Not Be Duplicated, Copied, Reproduced or Otherwise Used In Any Manner Not in the Best Interest of Perennial Energy, Inc. All Ideas and Concepts Remain the Property of Perennial Energy, Inc.

ENGINEERING SIGNATURES

	DATE
DESIGNED BY: K.WADE	8/4/10
DRAWN BY: T.CREECH/SMB	8/4/10

TITLE: 120VAC & INSTRUMENTATION ELEMENTARY

UNLESS OTHERWISE SPECIFIED DIMENSIONS ARE IN INCHES
FRACT ±1/16 .XX ±.03 ANGLES ±0°30'

SIZE D 34x22 | DWG. NO. EE-005-0342

MATERIAL: AS NOTED | SCALE AS NOTED | FILE NO. EE-005-0342 R6.DWG | SHEET 3 OF 3

1:\ACAD\1601-1650\1641\EE-005-0342 R6.dwg, 10/4/2011 9:02:32 AM, sbeve

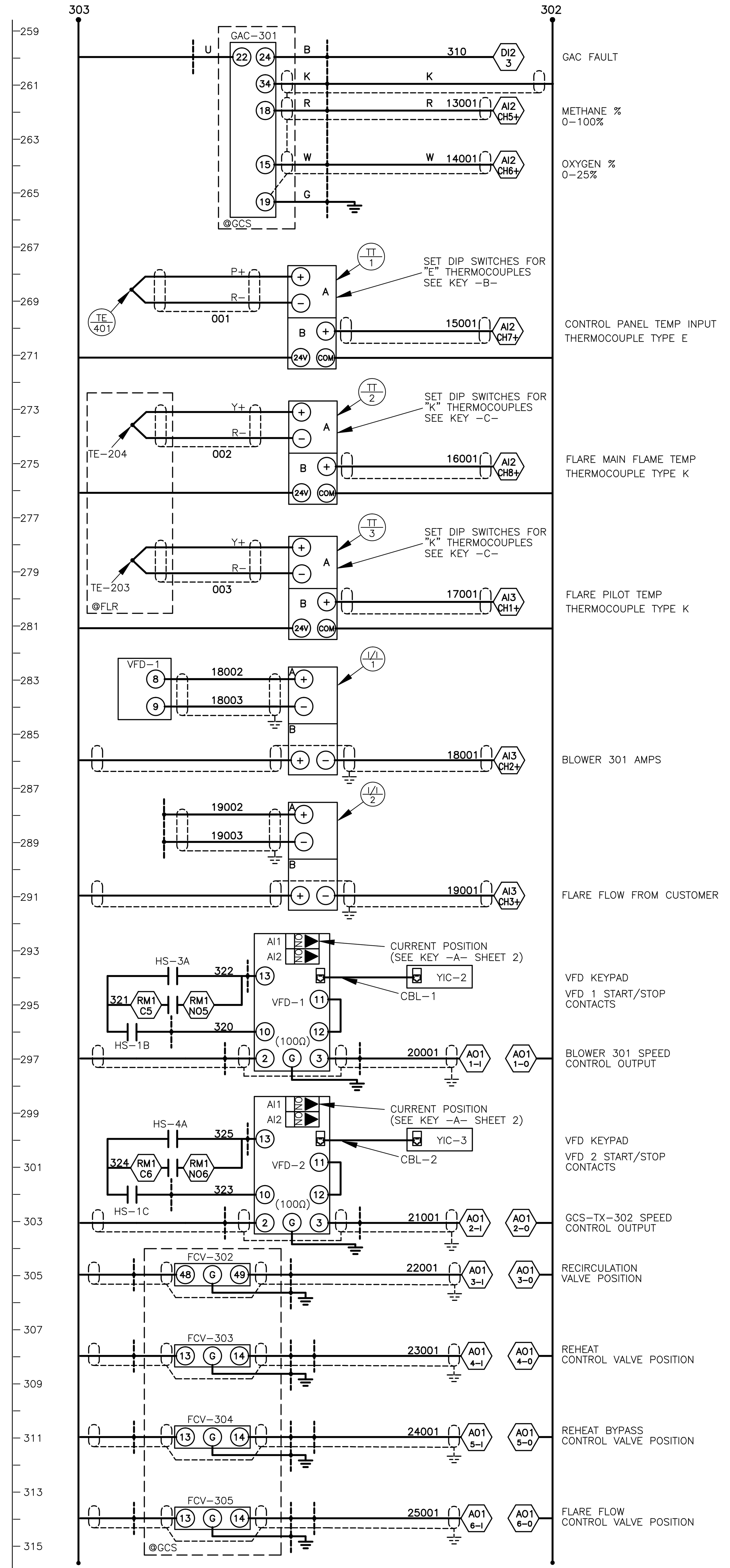

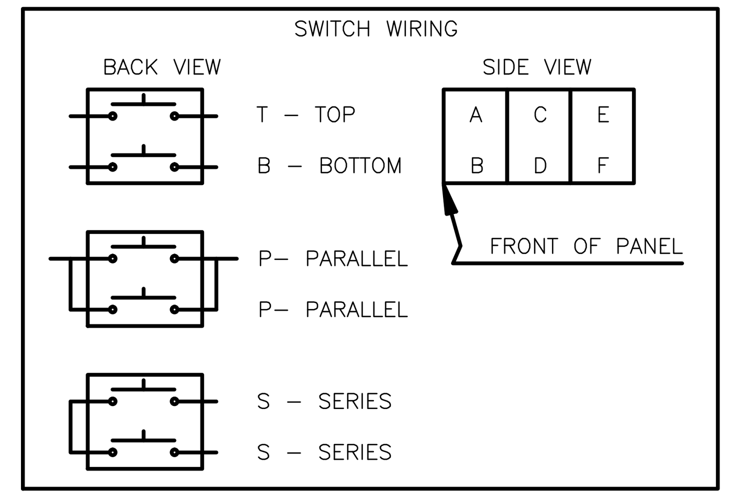

ELECTRICAL LINES LEGEND

- ELECTRICAL WIRING
- CUSTOMER SUPPLIED WIRING
- DEVICE BORDERS
- LOCATION BORDERS
- WIRE SHIELDS
- FUTURE
- FUTURE WIRING

COLOR OF WIRE	COLOR SYMBOL	VOLTAGE	NUMBER RANGE
GREEN	G	GROUND	
WHITE	W	NEUTRAL	
GRAY SHLD		mADC, mVDC	1000–99099
YELLOW SHLD		K THERMOCPL	001–049
PURPLE SHLD		E THERMOCPL	001–049
BLACK SHLD		J THERMOCPL	001–049
GRAY SHLD		RTD	050–099
BROWN	B	5VDC	100–199
YELLOW	Y	*	200–299
BLUE	U	24–32VDC	300–399
PURPLE	P	32VAC	300–399
RED	R	120VAC	400–599
BLACK	K	208VAC	600–699
BLACK	K	480VAC	700–799
BLACK	K	4160VAC	800–849

* POWERED FROM EXTERNAL SOURCE

NOTES:

- USE FINGER GUARDS ON ALL SWITCHES
- IMC CONDUIT
- UNLESS OTHERWISE NOTED, ALL COMPONENTS SHOWN ARE MOUNTED IN OR ON THE CONTROL PANEL
- EXACT CONTROL SETPOINTS TO BE DETERMINED ON SITE
- SEPARATE 120VAC WIRING FROM LOW VOLTAGE SIGNAL WIRING. CROSS 120VAC AND SIGNAL WIRES AT 90 DEGREES
- WIRE NUMBERS ARE THE SAME ON BOTH SIDES OF THE TERMINAL BLOCK TERMINAL BLOCK NO. SAME AS THE WIRE NO.
- ALL PLC NON SHIELDED WIRING TO BE 18GA THHN OR THWN. ALL OTHER NON SHIELDED WIRING TO BE 16GA THHN OR THWN UNLESS OTHERWISE INDICATED.
- ALL WIRE COLORS ARE ACCORDING TO ATTACHED TABLE
- ALL SHIELDED WIRE 18GA BELDEN #8760 (2 WIRE), OR #8770 (3 WIRE).
- ALL THERMOCOUPLE EXTENSION WIRE TYPE 20GA SHIELDED.
- ⟨DI1 2⟩ INDICATES PLC TERMINAL
- PARALLEL RUNS OF THERMOCOUPLE EXTENSION WIRE MUST BE OF THE SAME LENGTH AND POINT OF ORIGIN
- SYMBOL FOR WIRES LEAVING ENCLOSURE WITH AND WITHOUT TERMINAL BLOCK RESPECTIVELY

KEY –A–

ACS350/ACS550 VFD
DIP SWITCHES FOR ANALOG INPUT

- IN VOLTAGE POSITION
- IN CURRENT POSITION

KEY –B–

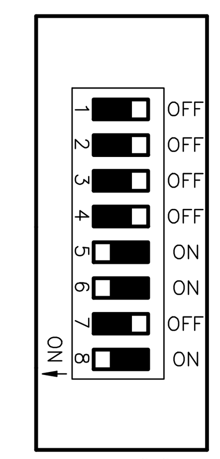

TYPE "E" THERMOCOUPLE IN 4–20 mA OUTPUT

KEY –C–

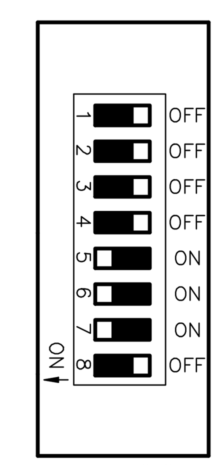

TYPE "K" THERMOCOUPLE IN 4–20 mA OUTPUT

SYSTEM		OP T1311		HS 1
OFF	ON	BLOCK		RUNG
A O	X	T2	T	178
B O	X		B	296
C O	X	T2	T	302
D O	X		B	X

INLET SHUTDOWN VALVE			OP T21KB		HS 2
TEST	CLOSED	AUTO	BLOCK		RUNG
A X	O	O		T	188
B O	O	X		B	179

BLOWER 301			OP T21KB		HS 3
TEST	OFF	AUTO	BLOCK		RUNG
A X	O	O		T	294
B O	O	X		B	179

AFTERCOOLER 302			OP T21KB		HS 4
TEST	OFF	AUTO	BLOCK		RUNG
A X	O	O		T	300
B O	O	X		B	179

FUTURE

GLYCOL CHILLER 601			OP T21KB		HS–5
TEST	OFF	AUTO	BLOCK		RUNG
A X	O	O		T	
B O	O	X		B	

GAC CALIBRATION		OP T20KB		HS 6
OFF	ON	BLOCK		RUNG
A X	O			X
B O	X			177

FLARE CONTROL			OP T20KB		HS 7
REMOTE	PEI	AUTO	BLOCK		RUNG
A X	O			T	X
B O	X			B	181

FLARE PRIMARY SHUTDOWN VALVE			OP T21KB		HS 8
TEST	CLOSED	AUTO	BLOCK		RUNG
A X	O	O		T	183
B O	O	X		B	181

FLARE SECONDARY SHUTDOWN VALVE			OP T21KB		HS 9
TEST	CLOSED	AUTO	BLOCK		RUNG
A X	O	O		T	185
B O	O	X		B	181

ALARM SHUTDOWN RESET		OP T23B		HS 10
OFF	ON	BLOCK		RUNG
A O	X		B	135

EMERGENCY STOP		OP *		HS 11
OUT	IN	BLOCK		RUNG
A X	O		P	110
B X	O		P	111
C X	O		P	112
D X	O		P	113

* T–5J63–33X

PLC DIGITAL INPUT MODULE (DI 1)

TERM	ADDRESS	DESCRIPTION	RUNG
A0	X70	ALARM SHUTDOWN RESET	135
A1	X71	LFG INLET VALVE OPEN	164
A2	X72	RECIRCULATION VALVE OPEN	138
A3	X73	BLOWER 301 VFD RUN	148
A4	X74	BLOWER 301 VFD FAULT	149
A5	X75	GCS–TX–302 VFD RUN	151
A6	X76	GCS–TX–302 VFD FAULT	152
A7	X77	FLR PRIMARY SD VLV CLOSED	155
B0	X100	FLR SEC SD VLV CLOSED	160
B1	X101	ENGINE FAIL	175
B2	X102	GAC CALIBRATION ON	177
B3	X103	SYSTEM AUTO ON	179
B4	X104	FLARE AUTO ON	181
B5	X105	FLARE PILOT ON	191
B6	X106		
B7	X107		

PLC DIGITAL INPUT MODULE (DI 2)

TERM	ADDRESS	DESCRIPTION	RUNG
0	X60	FLT–301 HIGH COND LVL	215
1	X61	FLT–302 BTM HIGH COND LVL	219
2	X62	FLT–302 TOP HIGH COND LVL	222
3	X63	GAC FAULT	260
4	X64		
5	X65		
6	X66		
7	X67		

PLC RELAY OUTPUT MODULE (RM 1)

TERM	ADDRESS	DESCRIPTION	RUNG
0NO	Y20	RUN LAMP	129
0NC	Y20		
1NO	Y21	ALARM/SHUTDOWN LAMP	131
2NO	Y22	ALARM BEACON	133
3NO	Y23	FLARE PRIMARY SD VLV SOL	182
4NO	Y24	FLARE SEC SD VLV SOL	184
5NO	Y25	VFD 1 START/STOP	295
6NO	Y26	VFD 2 START/STOP	301
6NC	Y26		
7NO	Y27		
7NC	Y27	SYSTEM SD TO CUSTOMER	186

PLC RELAY OUTPUT MODULE (RM 2)

TERM	ADDRESS	DESCRIPTION	RUNG
0NO	Y30	INLET VALVE RELAY	187
0NC	Y30		
1NO	Y31	FLARE PILOT ON	190
2NO	Y32	FALSE BLOWER RUN	189
3NO	Y33		
4NO	Y34		
5NO	Y35		
6NO	Y36		
6NC	Y36		
7NO	Y37		
7NC	Y37		

PLC ANALOG INPUT MODULE (AI 1)

TERM	ADDRESS	DESCRIPTION	RUNG
CH1	V2000	LFG VACUUM	224
CH2	V2001	LFG INLET TEMP	227
CH3	V2002	BLOWER 301 VIBRATION	230
CH4	V2003	BLOWER 301 DISCHARGE TEMP	233
CH5	V2004	TX–302 DISCHARGE TEMP	236
CH6	V2005	TOTAL FLOW DELTA P	239
CH7	V2006	TOTAL FLOW PRESSURE	242
CH8	V2007	TOTAL FLOW TEMP	245

PLC ANALOG INPUT MODULE (AI 2)

TERM	ADDRESS	DESCRIPTION	RUNG
CH1	V2010	ENGINE FLOW DELTA P	248
CH2	V2011	ENGINE FLOW PRESSURE	251
CH3	V2012	ENGINE FLOW TEMP	254
CH4	V2013	BAROMETRIC PRESSURE	257
CH5	V2014	METHANE %	262
CH6	V2015	OXYGEN %	264
CH7	V2016	CONTROL PANEL TEMP INPUT	270
CH8	V2017	FLARE MAIN FLAME TEMP	275

PLC ANALOG INPUT MODULE (AI 3)

TERM	ADDRESS	DESCRIPTION	RUNG
CH1	V2020	FLARE PILOT TEMP	280
CH2	V2021	BLOWER 301 AMPS	286
CH3	V2022	FLARE FLOW FROM CUSTOMER	291
CH4	V2023		
CH5	V2024		
CH6	V2025		
CH7	V2026		
CH8	V2027		

PLC ANALOG INPUT MODULE (AO 1)

TERM	ADDRESS	DESCRIPTION	RUNG
CH1	V2200	BLOWER 301 SPEED CONTROL	297
CH2	V2201	GCS–TX–302 SPEED CONTROL	303
CH3	V2202	RECIRCULATION VALVE POSITION	305
CH4	V2203	REHEAT CONTROL VLV POSITION	308
CH5	V2204	REHEAT BYPASS CTL VLV POS	311
CH6	V2205	FLARE FLOW CNTRL VLV POS	314
CH7	V2206		
CH8	V2207		

CPU BASE CONFIGURATION — PLC–1

	0	1	2	3	4	5	6	7
CPU	AI–1	AI–2	AI–3	AO–1	DI–2			
DL260	X0 THRU X17	X20 THRU X37	X40 THRU X57	Y0 THRU Y17	X60 THRU X67	FILL 1	FILL 2	COM 1

TO ES–1 RUNG 188 — CBL–5

EM 1 — CBL 6 — EM 2

EXPANSION BASE CONFIGURATION — EXP–1

	0	1	2	3	4
	DI–1	RM–1	RM–2		
CM 1	X70 THRU X107	Y20 THRU Y27	Y30 THRU Y37	FILL 3	FILL 4

NOTE: INSTALL PLC BASE WITH SUFFICIENT SPACE FOR FUTURE UPGRADES

REDUCED FROM ORIGINAL SIZE

NOTES:
- ADD TRENDING SCREENS ON TOUCHSCREENS FOR TOTAL FLOW, ENGINE FLOW, FLARE FLOW, PILOT FLOW, FLARE TEMP, METHANE, &OXYGEN.
- PROVIDE ACCESS FOR REMOTE TROUBLESHOOTING

LTR	DESCRIPTION	DATE	APPROVED
6	AS FIELD MODIFIED (10/3/11) TC		

REVISIONS

APPLICABLE JOB NO(S). 1641
BUNCOMBE CO

PEI PERENNIAL ENERGY
1375 COUNTY ROAD 8690
WEST PLAINS, MO 65775
www.PerennialEnergy.com

This Drawing Contains Proprietary Data and May Not Be Duplicated, Copied, Reproduced or Otherwise Used In Any Manner Not in the Best Interest of Perennial Energy, Inc. All Ideas and Concepts Remain the Property of Perennial Energy, Inc.

ENGINEERING SIGNATURES
DESIGNED BY: K.WADE — DATE 8/4/10
DRAWN BY: T.CREECH/SMB — DATE 8/4/10

TITLE: 120VAC & INSTRUMENTATION ELEMENTARY

UNLESS OTHERWISE SPECIFIED DIMENSIONS ARE IN INCHES
FRACT ±1/16 .XX ±.03 ANGLES ±0°30

SIZE D 34x22 — DWG. NO. EE–005–0342

MATERIAL: AS NOTED — SCALE AS NOTED — FILE NO. EE–005–0342 R6.DWG — SHEET 2 OF 3

I:\ACADP\1601-1650\1641\EE-005-0342 R6.dwg, 10/4/2011 9:01:38 AM, steve

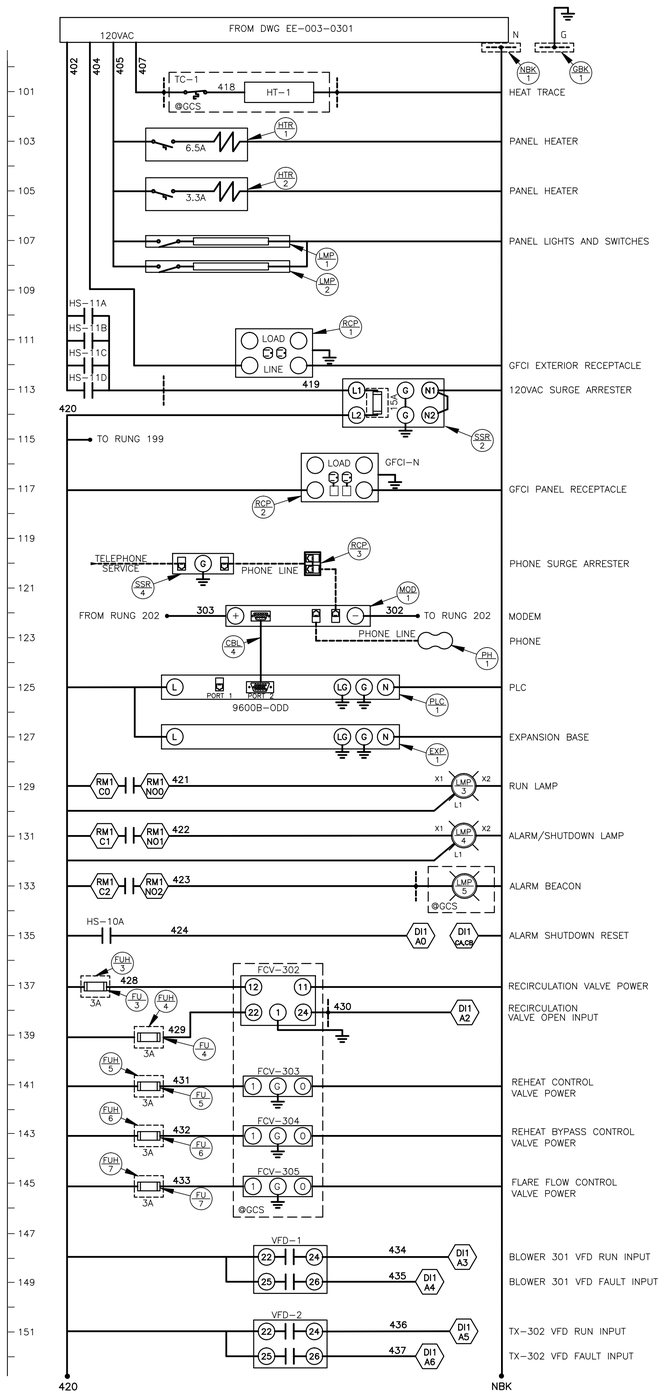

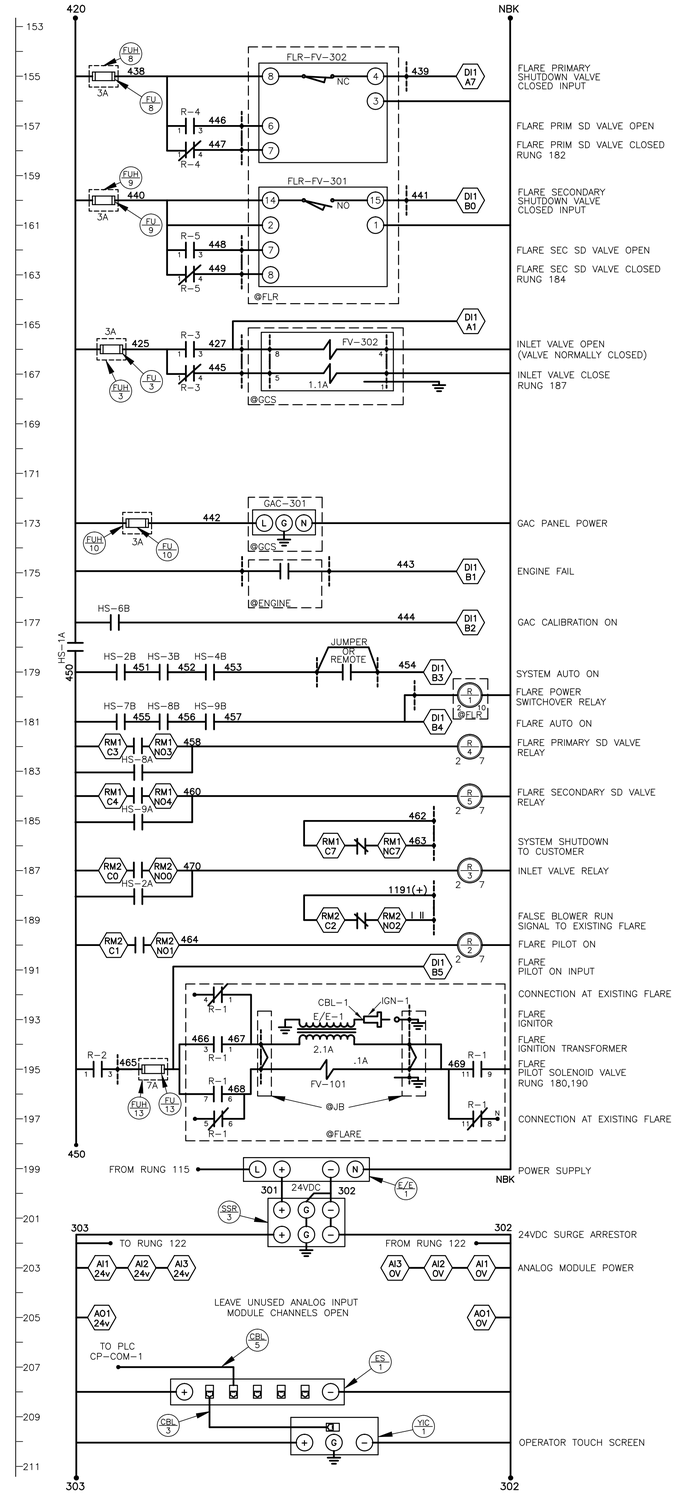

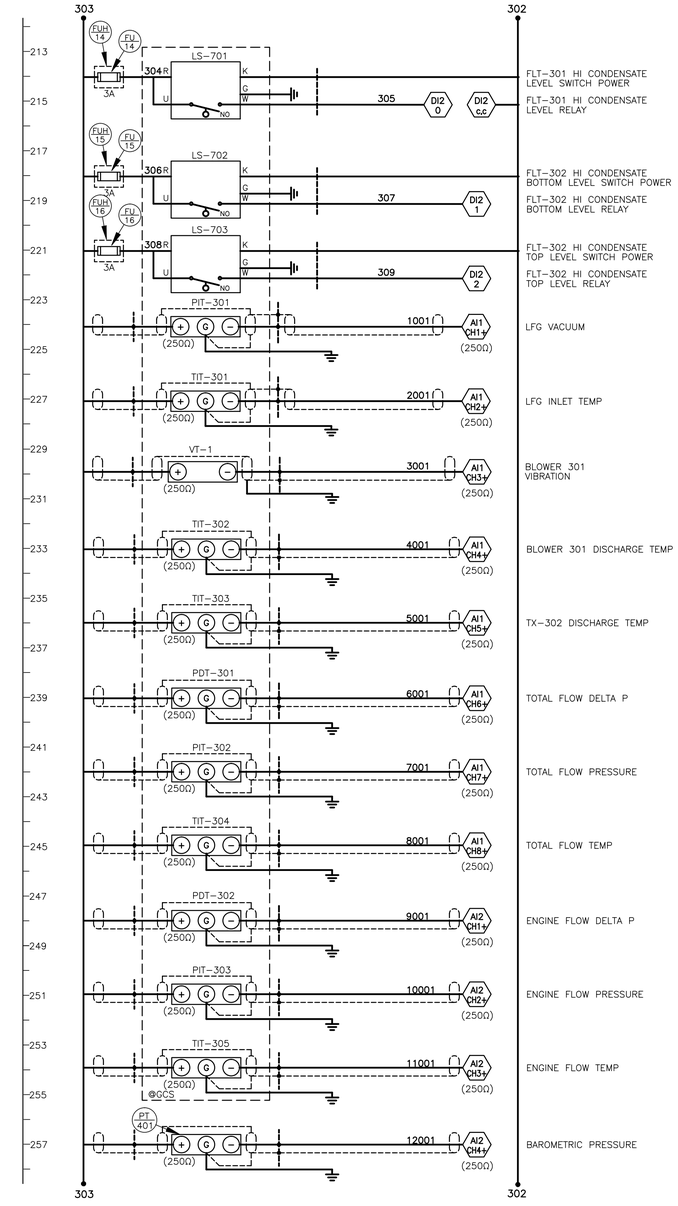

REDUCED FROM ORIGINAL SIZE

LTR	DESCRIPTION	DATE	APPROVED
6	AS FIELD MODIFIED (10/3/11) TC		

REVISIONS

APPLICABLE JOB NO(S). 1641
BUNCOMBE CO

PEI PERENNIAL ENERGY
1375 COUNTY ROAD 8690
WEST PLAINS, MO 65775
www.PerennialEnergy.com

This Drawing Contains Proprietary Data and May Not Be Duplicated, Copied, Reproduced or Otherwise Used In Any Manner Not in the Best Interest of Perennial Energy, Inc. All Ideas and Concepts Remain the Property of Perennial Energy, Inc.

ENGINEERING SIGNATURES

	DATE
DESIGNED BY: K.WADE	8/4/10
DRAWN BY: T.CREECH/SMB	8/4/10

UNLESS OTHERWISE SPECIFIED DIMENSIONS ARE IN INCHES
FRACT ±1/16 .XX ±.03 ANGLES ±0°30'

TITLE: 120VAC & INSTRUMENTATION ELEMENTARY

SIZE D 34x22 DWG. NO. EE-005-0342

MATERIAL: AS NOTED | SCALE AS NOTED | FILE NO. EE-005-0342 R6.DWG | SHEET 1 OF 3

I:\ACAD\1601-1650\1641\EE-005-0342 R6.dwg, 10/4/2011 9:00:51 AM, steve

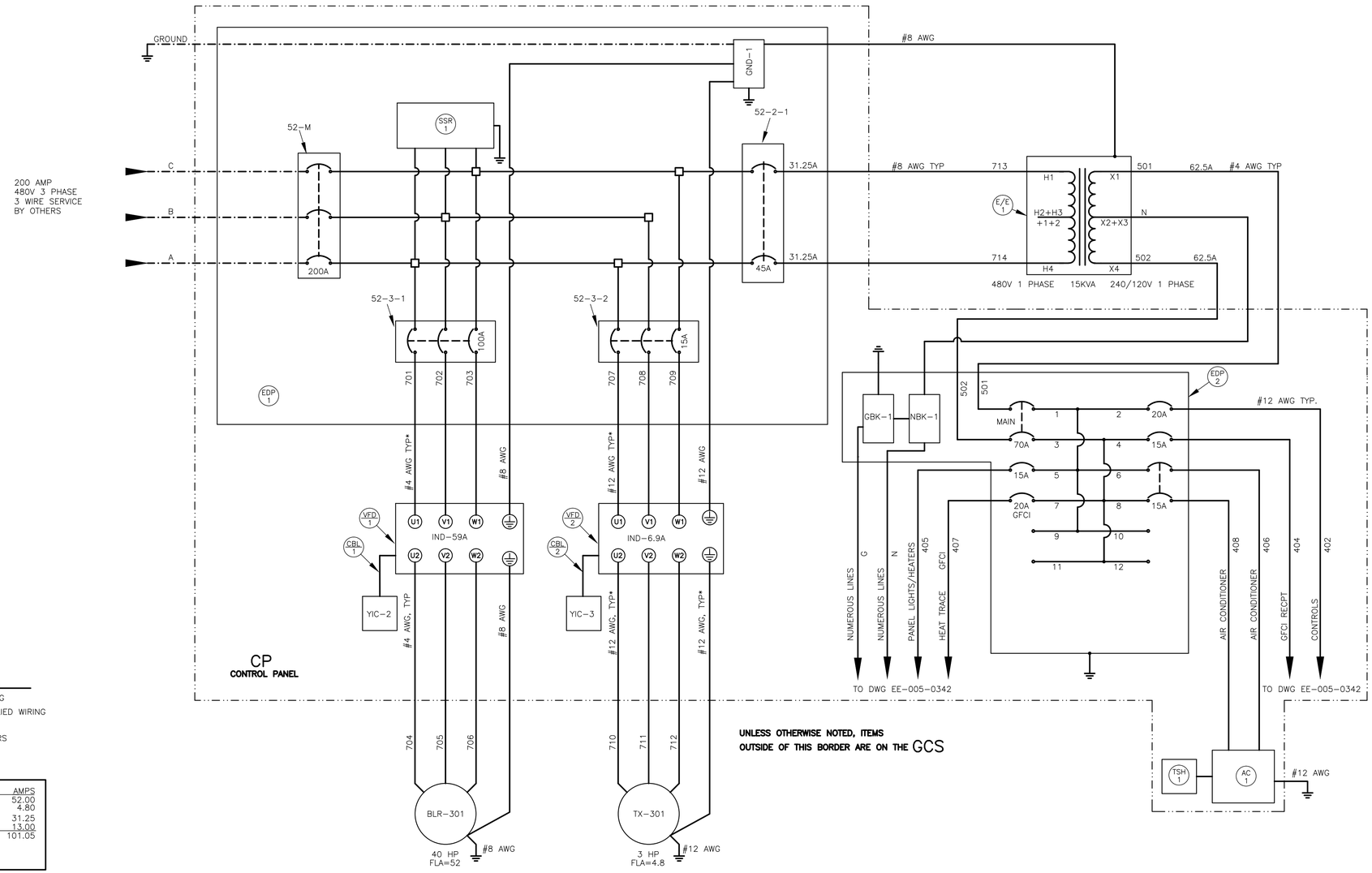

REDUCED FROM ORIGINAL SIZE

ELECTRICAL LINES LEGEND

- ELECTRICAL WIRING
- CUSTOMER SUPPLIED WIRING
- DEVICE BORDERS
- LOCATION BORDERS
- WIRE SHIELDS
- FUTURE WIRING

480V LOAD SCHEDULE	AMPS
BLR-301	52.00
TX-301	4.80
TRANSFORMER E/E-1	31.25
25% OF LARGEST MOTOR LOAD	13.00
	101.05
USE 200 AMP SERVICE	

PHASE A	BROWN
PHASE B	ORANGE
PHASE C	YELLOW

COLOR OF WIRE	COLOR SYMBOL	VOLTAGE	NUMBER RANGE
GREEN	G	GROUND	
WHITE	W	NEUTRAL	
GRAY SHLD		4-20ma	1000-99099
YELLOW SHLD		K THERMOCPL	001-049
PURPLE SHLD		E THERMOCPL	001-049
BLACK SHLD		J THERMOCPL	001-049
GRAY SHLD		RTD	050-099
BROWN	B	5VDC	100-199
YELLOW	Y	*	200-299
BLUE	U	24-32VDC	300-399
PURPLE	P	32VAC	300-399
RED	R	120VAC	400-599
BLACK	K	208VAC	600-699
BLACK	K	480VAC	700-799
BLACK	K	4160VAC	800-849
* POWERED FROM EXTERNAL SOURCE			

*BASED ON ART. 310-16 NEC, 3 75°C CONDUCTORS IN SINGLE CONDUIT, DERATE 1.0 FOR 86°F ASHRE AMBIENT REF. 1% ASHVILLE, NC.

(XX) REFERENCED PARTS

Part ID	Section	Drawing ID	RefDes	RefDesQty	UnitQty	TotalQty	Component	MFG / Material / Type	Description
6924	CP	EE-003-0301	CP-AC-1	1 ea	1 ea	1 ea	Air Conditioner	Bard	W12A1-A-00-B-XXXXJ, 1 Ton, R-410A
4845	CP	EE-003-0301	CP-CBL-1,2	2 ea	1 ea	2 ea	Ethernet Cable	Communication Cable Co.	4545C5_12, 12ft, Cat 5e Patch Cable, RJ45-RJ45
7328	CP	EE-003-0301	CP-EDP-1	1 ea	1 ea	1 ea	Load Center	Cutler-Hanmer	Pow-R-Line3a, 200A Main Breaker, 480V, 3ph, w/grnd bar, Nema3R, 65 kA.I.C. Fully rated, Spec#1641
24	CP	EE-003-0301	CP-EDP-2	2 ea	1 ea	2 ea	Breaker	Cutler-Hanmer	CH115, 15 Amp
1929	CP	EE-003-0301	CP-EDP-2	1 ea	1 ea	1 ea	Breaker	Cutler-Hanmer	CH270, 70A, 2 pole
25	CP	EE-003-0301	CP-EDP-2	1 ea	1 ea	1 ea	Breaker	Cutler-Hanmer	CH120, 20 Amp
1302	CP	EE-003-0301	CP-EDP-2	1 ea	1 ea	1 ea	Breaker	Cutler-Hanmer	CH120GF, 20A, 1 pole, GFCI
2313	CP	EE-003-0301	CP-EDP-2	1 ea	1 ea	1 ea	Breaker	Cutler-Hanmer	CH215, 15A, 2 pole
1373	CP	EE-003-0301	CP-EDP-2	1 ea	1 ea	1 ea	Breaker Retainer	Cutler-Hanmer	CH125RB
1015	CP	EE-003-0301	CP-EDP-2	1 ea	1 ea	1 ea	Cover	Cutler-Hanmer	CH8BF
645	CP	EE-003-0301	CP-EDP-2	1 ea	1 ea	1 ea	Load Center	Cutler-Hanmer	CH16L125B MLO
129	CP	EE-003-0301	CP-SSR-1	1 ea	1 ea	1 ea	Arrestor-Surge	Square D	SDSA 3650
5050	CP	EE-003-0301	CP-TSH-1	1 ea	1 ea	1 ea	Thermostat	Bard	8403-057, heat/cool, auto/on, digital
4605	CP	EE-003-0301	CP-VFD-1	1 ea	1 ea	1 ea	Variable Frequency Drive	ABB	ACS550-U1-059A-4(N), 40 HP Variable Torque, 480 V, 3 Phase, Nema 1
5037	CP	EE-003-0301	CP-VFD-2	1 ea	1 ea	1 ea	Variable Frequency Drive	ABB	ACS550-U1-06A9-4(N), 3 HP Variable Torque, 480 V, 3 Phase, Nema 1
5434	GCS	EE-003-0301	GCS-E/E-1	1 ea	1 ea	1 ea	Transformer	Hammond	NMF015LE, 15KVA, 480 to 120/240 VAC single phase, Floor mount, Energy Efficient

U.L. LISTED

LTR	DESCRIPTION	DATE	APPROVED
3	AS BUILT (9/13/11) SB		

REVISIONS

APPLICABLE JOB NO(S). 1641
BUNCOMBE CO

PEI PERENNIAL ENERGY
1375 COUNTY ROAD 8690
WEST PLAINS, MO 65775
www.PerennialEnergy.com

This Drawing Contains Proprietary Data and May Not Be Duplicated, Copied, Reproduced or Otherwise Used In Any Manner Not in the Best Interest of Perennial Energy, Inc. All Ideas and Concepts Remain the Property of Perennial Energy, Inc.

ENGINEERING SIGNATURES

DESIGNED BY: K.WADE DATE 7/21/10
DRAWN BY: T.HAVILAND/TFC DATE 7/21/10

TITLE: 480 VOLT 3 PHASE ELEMENTARY

UNLESS OTHERWISE SPECIFIED DIMENSIONS ARE IN INCHES
FRACT ±1/16 .XX ±.03 ANGLES ±0°30'

SIZE D 34x22 DWG. NO. EE-003-0301

MATERIAL: AS NOTED SCALE AS NOTED FILE NO. EE-003-0301 R3.DWG SHEET 1 OF 1

T:\ACAD\1603-1605\1641\EE-003-0301 R3.dwg, 9/13/2011 1:04:56 PM, sbrown

Parts Reference Designators

Location Designators

Ref Des	Location
ACS	Air Compressor Skid
CDS	Condensate Destruction System
COGS	Cogeneration Skid
CP	Control Panel
CST	Condensate Storage Tank
EG	Engine Generator
FLR	Flare
GAC	Gas Analysis Cabinet
GCS	Gas Compression Skid
GHS	Gas Handling Skid
ITC	Ignition Transformer Cabinet
MCC	Motor Control Center
MISC	Loose Parts
PIP	Piping Not On Skid

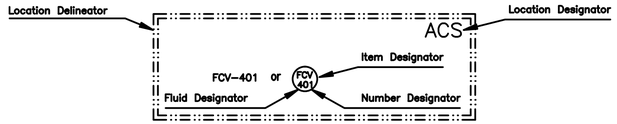

If the Reference Designator is in a bubble, then the item will be listed on that drawing's material list.
If the Reference Designator is not in a bubble, then it is referring to an item listed on another drawing's material list or it is supplied as an integral part of another item called out by a bubbled reference designator.

Fluid Designators

Ref Des	Fluid
1XX	Fossil Fuels
2XX	Oils
3XX	Biogas
4XX	Air
5XX	Combustion Exhaust
6XX	Coolants
7XX	Condensate
8XX	Inert Gases
9XX	Digester Fluids

Item Designators

Ref Des	Reference Item	Typical Usage/Description
AC	Air Conditioner	Air Conditioner
ACF	Activated Carbon Filter	Condensate Tank Vent Filter
AD	Auto Dialer	Auto Dialer
AI	Analog Input	PLC Analog Input Module
AIO	Analog Input Output	PLC Analog Input Output Module
AO	Analog Output	PLC Analog Output Module
AP	Analysis Port	Gas Sample Ports
BALL	Burner Alarm Low Low	Flame Fail Shutdown
BE	Burner Element	UV Sensor
BG	Burner Glass	View Ports
BLR	Blower	Air or Gas Blower
BN	Burner	Boiler, Hot Water Heater
BS	Burner Switch	Flame Recognition Switch
CBL	Cable	Cables, Specialty Wiring Between Devices
CGT	Combustible Gas Transmitter	LEL Transmitter
CHR	Chart Recorder	Paper or Paperless Chart Recorder
CMP	Compressor	Air or Gas Compressor
D	Diode	Diode
DI	Digital Input	PLC Digital Input Module
EDP	Electrical Distribution Panel	Load Centers, Breaker Panels
E/E	Voltage Transformer	Electrical Transformers, Power Supplies
EI	Voltage Indicator	System Voltage Monitoring
ES	Exhaust Silencer	Muffler
FAH	Flow Alarm High	High Flow Alarm
FAHH	Flow Alarm High High	High Flow Shutdown
FAL	Flow Alarm Low	Low Flow Alarm
FALL	Flow Alarm Low Low	Low Flow Shutdown
FC	Flow Controller	PID Loop Flow Controller, Burner Plug
FCV	Flow Control Valve	Actuated or Hand Modulating Valves, Dampers
FD	Fused Disconnect	Fused Disconnect
FE	Flow Element	Pitot Tube, Hot Wire Anemometer, Orifice Plate
FI	Flow Indicator	Flow Rate Gauge
FIR	Flow Indicating Recorder	Paper or Paperless Chart Recorder
FLT	Filter	Liquid or Gas Filter
FLTP	Port Filter	Unused Port Filter
FO	Flow Orifice	Flow Alarms
FQI	Flow Totalization Indicator	Chart Recorder
FSV	Flow Safety Valve	Check Valve
FT	Flow Transmitter	Flow Transmitter
FU	Fuse	Fuse
FUH	Fuse Holder	Fuse Holder
FV	Flow Valve	Open or Closed Valve not Modulating, Solenoid Valve, Shutdown Valve
FX	Flex	Expansion and Vibration Isolators, Hoses
GBK	Ground Block	Ground Block
HS	Hand Switch	Hand Operated Electrical Switches and Pushbuttons
HT	Heat Trace	Heat Trace
HTR	Heater	Electrical Heaters
HV	Hand Valve	Open or Closed Hand Operated Valve
HVP	Hand Valve Port	Gauge, Manometer and Sample Ports
I/I	Current Transformer	Alternating Current to Current Transformer
IAH	Current Alarm High	High Current Alarm
IAHH	Current Alarm High High	High Current Shutdown, Blower Overload
IAL	Current Alarm Low	Low Current Alarm, Blower Surge Alarm
IALL	Current Alarm Low Low	Low Current Shutdown, Blower Surge Shutdown
IGN	Ignitor	Spark Plugs, Spark Ignitors
II	Current Indicator	Motor Current
IIR	Current Indicating Recorder	Paper or Paperless Chart Recorder
IT	Current Transmitter	Current Transmitter
ITC	Ignitor Transformer Cabinet	Flare Ignitor
JB-HV	Junction Box-High Voltage	Interconnection Wiring
JB-LV	Junction Box-Low Voltage	Interconnection Wiring
KI	Time Indicator	Hour Meter
LAH	Level Alarm High	High Liquid Level Alarm
LAHH	Level Alarm High High	High Liquid Level Shutdown
LAL	Level Alarm Low	Low Liquid Level Alarm
LALL	Level Alarm Low Low	Low Liquid Level Shutdown
LC	Level Controller	Liquid Level Controller, Drip Trap
LCH	Level Control High	Condensate Pump Control
LCL	Level Control Low	Condensate Pump Control
LE	Level Element	Liquid Level Measuring Element, Capacitance Probe
LI	Level Indicator	Condensate Measurement
LMP	Lamp	Lights, Lamps, Beacons
LS	Level Switch	Liquid Level Switch
LT	Level Transmitter	Liquid Level Measuring Transmitter
LUB	Air Lubricator	Air Lubricator
LZ	Level controller	Air Vent
MAL	Methane Alarm Low	Low Methane Level Alarm
MALL	Methane Alarm Low Low	Low Methane Level Shutdown
MI	Methane Indicator	Methane Level Gauge
MIR	Methane Indicating Recorder	Paper or Paperless Chart Recorder
MOD	Modem	Modem
MV	Mixer Valve	Engine Carburetor
NBK	Neutral Block	Neutral Block
OAH	Oxygen Alarm High	High Oxygen Level Alarm
OAHH	Oxygen Alarm High High	High Oxygen Level shutdown
OE	Oxygen Element	Oxygen Sensor
OI	Oxygen Indicator	Oxygen Level Gauge
OIR	Oxygen Indicating Recorder	Paper or Paperless Chart Recorder
OT	Oxygen Transmitter	Oxygen Level Transmitter
PAH	Pressure Alarm High	High Pressure Alarm
PAHH	Pressure Alarm High High	High Pressure Shutdown
PAL	Pressure Alarm Low	Low Pressure Alarm
PALL	Pressure Alarm Low Low	Low Pressure Shutdown
PC	Pressure Controller	PID Loop Pressure Controller, Valve Operator Logic
PCV	Pressure Control Valve	Regulators, Actuated or Hand Modulating Valves
PDI	Pressure Differential Indicator	Differential Pressure Gauge
PDT	Pressure Differential Transmitter	DP Flow Meter
PH	Phone	Phone
PI	Pressure Indicator	Pressure Gauge
PIA	Pressure Indicator & Alarm	Pressure Gauge w/Switch
PIR	Pressure Indicating Recorder	Paper or Paperless Chart Recorder
PLC	Programmable Logic Controller	Programmable Logic Controller
PLT	Pilot	Pilot Mixing Assembly
PMP	Pump	Liquid Pump
PR	Pressure Recorder	Paper or Paperless Recorder
PS	Pressure Switch	Pressure Switch
PSE	Pressure Safety Element	Rupture Disk
PT	Pressure Transmitter	Pressure Transmitter
R	Relay	Control Relay
RCP	Receptacle	Electrical Receptacle
RES	Resistor	Resistor
RM	Relay Module	PLC Relay Module
SGN	Sign	Sign
SI	Speed Indicator	Speed or Frequency Meter
SSR	Surge Arrestor	Surge Protectors, Lightning Arrestors
TAH	Temperature Alarm High	High Temperature Alarm
TAHH	Temperature Alarm High High	High Temperature Shutdown
TAL	Temperature Alarm Low	Low Temperature Alarm
TALL	Temperature Alarm Low Low	Low Temperature Shutdown
TB	Terminal Block	Terminal Block
TC	Temperature Controller	Thermostat
TCV	Temperature Control Valve	Control Valves
TE	Temperature Element	Thermocouple, RTD, Thermister
TES	Temperature Element Switch	Thermocouple Switch
TEV	Thermostatic Expansion Valve	Thermostatic Expansion Valve
TEW	Temperature Element Well	Port for Thermocouple, RTD or Thermister
TI	Temperature Indicator	Temperature Gauge
TIA	Temperature Indicator & Alarm	Temperature Gauge w/Switch
TIR	Temperature Indicator Recorder	Paper or Paperless Chart Recorder
TK	Tank	Propane Tank, Condensate Storage Tank
TSE	Temperature Safety Element	Flame Arrestor, Flame Check
TSV	Temperature Safety Valve	Valved Fusible Link
TT	Temperature Transmitter	Temperature Transmitter
TX	Heat Exchanger	Heat Exchanger
UPS	Uninterruptable Power Supply	Uninterruptable Power Supply
VAH	Vibration Alarm High	High Vibration Alarm
VAHH	Vibration Alarm High High	High Vibration Shutdown
VFD	Variable Frequency Drive	Variable Frequency Drive
VI	Vibration Indicator	Vibration Gauge
VIR	Vibration Indicating Recorder	Paper or Paperless Chart Recorder
VT	Vibration Transmitter	Vibration Transmitter
YA	Event Alarm	VFD Faults
YI	Event Indicator	Run Lamps
YIC	Event Indicator Controller	Touch Screens, Setpoint/Display Panels, VFD Keypads, UV Sensor Interface Panels
ZA	Position Alarm	Valve Fail To Open, Close
ZC	Position Controller	PID Loop Position Controller
ZI	Position Indicator	Valve or Damper Position Indicator
ZS	Position Switch	Valve Open, Close Switches

Drawing Reference Designators

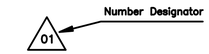

Drawing Number	Drawing Name
COVER 1641	Cover Page
ME-010-0089	Gas Compression System P&ID
PA-002-0348	Control Panel
EE-003-0301	480VAC 3 Phase Elementary
EE-005-0342	120VAC & Instrumentation Elementary
EE-018-0129	Interconnection Wiring
PA-001-0637	Gas Compression System Top Assembly
PA-001-0675	CSF Aux Flare Top Assembly

PEI PERENNIAL ENERGY

WEST PLAINS, MISSOURI USA

REDUCED FROM ORIGINAL SIZE

LTR	DESCRIPTION	DATE	APPROVED
2	AS BUILT (11/18/11) TC		

REVISIONS

APPLICABLE JOB NO(S). 1641
BUNCOMBE CO

PEI PERENNIAL ENERGY
1280 COUNTY ROAD 8690
WEST PLAINS, MO 65775
www.PerennialEnergy.com

This Drawing Contains Proprietary Data and May Not Be Duplicated, Copied, Reproduced or Otherwise Used In Any Manner Not in the Best Interest of Perennial Energy, Inc. All Ideas and Concepts Remain the Property of Perennial Energy, Inc.

ENGINEERING SIGNATURES

DESIGNED BY: K.WADE DATE 8/4/10
DRAWN BY: T.CREECH DATE 8/4/10

TITLE: COVER PAGE

UNLESS OTHERWISE SPECIFIED DIMENSIONS ARE IN INCHES
FRACT ±1/16 .XX ±.03 ANGLES ±0°30'

SIZE D 34x22 DWG. NO. COVER-1641

MATERIAL: AS NOTED

SCALE AS NOTED FILE NO. COVER-1641 R2.DWG SHEET 1 OF 1

I:\ACADF\1601-1650\1641\COVER-1641 R2.dwg, 11/18/2011 2:16:24 PM, DWG To PDF.pc3

GE Energy

JGC 420 GS-L.L

Description / Operation

Generator set

BUNCOMBE COUNTY LANDFILL
J J183
Engine number: 1021619
Module number: 1021618

2011-11
EN

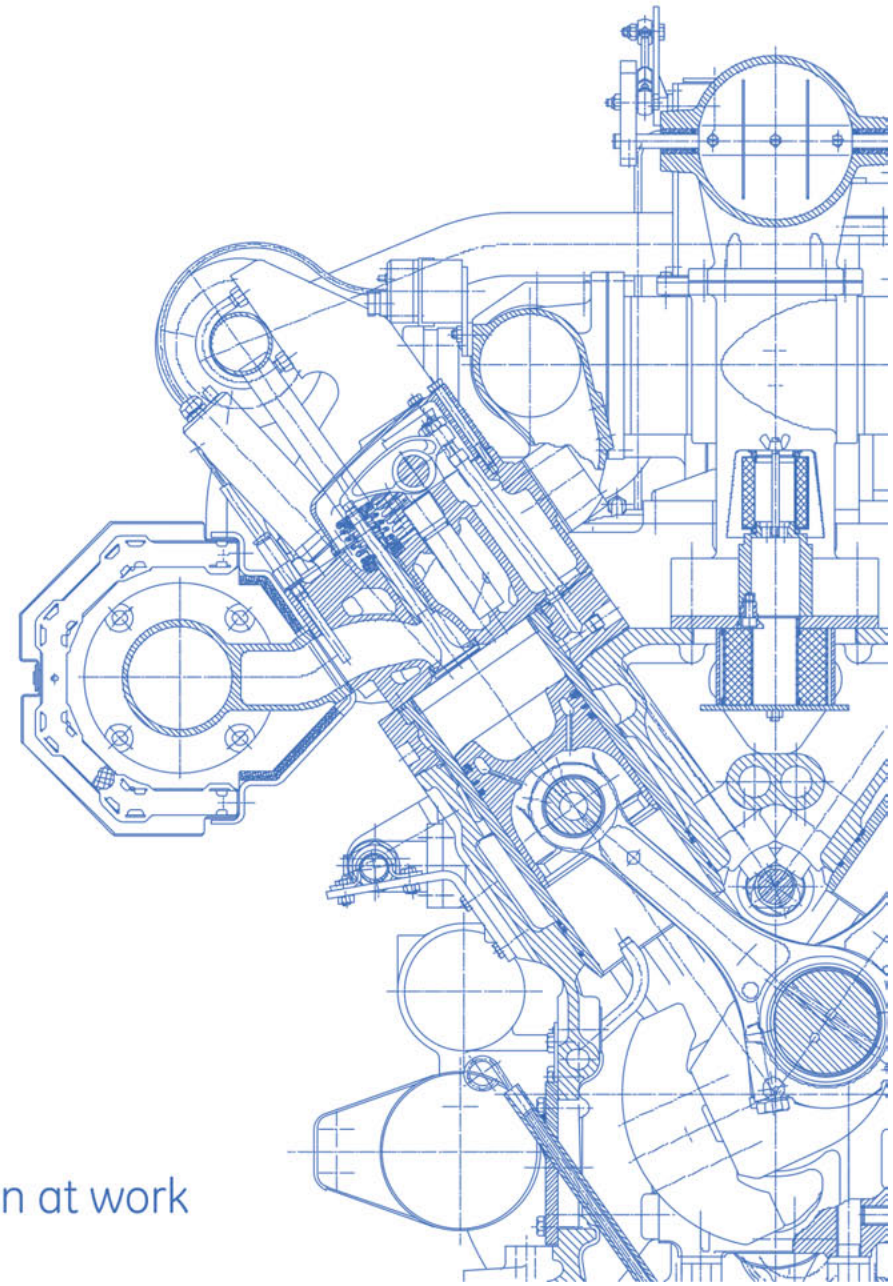

© GE Jenbacher GmbH & Co OG
Achenseestr. 1-3
A-6200 Jenbach (Austria)
www.gejenbacher.com

GE imagination at work

Revision history

Index	Date	Description/Revision summary	Creator *Auditor*
1	18.11.2011	Delivery	➔ **Footer** *Velik*

Original operating instructions

GE proprietary information: CONFIDENTIAL

The information contained in this document is General Electric Company proprietary information and is disclosed in confidence. As the property of GE it may not be used, disclosed to others or reproduced without the prior written consent of GE. This includes, but without limitation, the use, creation, manufacture, development, or derivation of any repairs, modifications, spare parts, designs, or configuration changes or to obtain government or regulatory approval to do so. If consent is given for reproduction in whole or in part, this notice and the notice set forth on each page of this document shall appear in any such reproduction in whole or in part.

© GE Jenbacher GmbH & Co OHG, 2011-11

Table of contents

User Instructions **1**
- Sections of the GE Jenbacher Product Documentation 1.1
- Key to Symbols 1.2
- Type Plate and Type Designation of GE Jenbacher Products 1.3
- Web portal 1.4
- Your Opinion Counts! 1.5
- Service and Sales partners 1.6
- Imprint 1.7

General conditions **2**
- Designated Use 2.1
- Declaration of Conformity ..... CE
- General conditions - Operation and Maintenance ..... TA 1100-0111
- Boundary conditions for GE Jenbacher gas engines ..... TA 1100-0110
- Safety instructions ..... TA 2300-0005

Operation of the plant **3**
- Technical specification of the control system 3.1
- Control box 3.2
- Dia.ne XT3 User Manual ..... DIA.NE
- Remote Data Transmission ..... Hermes

Fault rectification **4**
- Failure Checklist 4.1

Description **5**
- Basic engine 5.1
- Description 5.1.1
- Technical Data - Engine 5.1.2
- Engine diagrams 5.1.3
- Engine oil system 5.1.4
- Cooling water system 5.1.5
- Fuel gas system 5.1.6
- System 5.2
- Technical data - Facility 5.2.1
- Module drawings and Technical diagram 5.2.2
- Gas train 5.2.3
- MORIS ignition system 5.2.4
- Flexible coupling 5.2.5
- Control system 5.3
- Leanox® controller 5.3.1
- Speed controller 5.3.2
- Power controller 5.3.3
- Isolated operation controller 5.3.4

Consumables and Technical Instructions **6**
- Operating Materials 6.1

GE Proprietary Information: CONFIDENTIAL! Use or disclosure of data contained on this sheet is subject to the restrictions on the cover or on the first page.

Table of contents

Technical instructions 6.2
Torque wrench ..... TA 000-00-003
Checking the connecting rods ..... TA 000-00-004
Installing pistons – General tips ..... TA 000-03-002
Preservation of GE Jenbacher modules ..... TA 1000-0004
FX Container – roof construction / Roof rail preservation ..... TA 1000-0006
Requirements on the installation surface for GE Jenbacher plant ..... TA 1000-0041
Transporting and setting up GE Jenbacher switch cabinets ..... TA 1000-0043
Transport protection ..... TA 1000-0044
Lifting and transporting GE Jenbacher modules and positioning them in engine rooms ..... TA 1000-0046
Starter battery and power charger ..... TA 1000-0050
Special Container (3m) – Classification and handling (Container with top container corner fittings at both container ends) ..... TA 1000-0048
Lifting Jenbacher special containers (3m/9.8ft) (Containers with top container corner fittings at both container ends) ..... TA 1000-0064
FX – Roof Construction Container roof ..... TA 1000-0069
Approval procedure for various engine oils ..... TA 1000-0099A
Limit levels for used oil in GE Jenbacher gas engines ..... TA 1000-0099B
Procedure for testing plant-specific oil service life ..... TA 1000-0099C
Determining the initial pH value (ipH) of used lubrication oil as defined in TI 1000-0099B ..... TA 1000-0099D
Aid to interpreting used oil analyses of engine lubricants ..... TA 1000-0099K
Sampling lubricating oil / Lubricating oil sampling protocol ..... TA 1000-0112
Composition of cooling water in closed primary circuits ..... TA 1000-0200
Antifreezing compound ..... TA 1000-0201
Anti-corrosive additive for cooling water ..... TA 1000-0204
Composition of circuit water in hot water and warm water heating systems ..... TA 1000-0206
Fuel gas quality - natural, associated petroleum, bio- and landfill gas ..... TA 1000-0300
Fuel gas quality: Coal mine gas ..... TA 1000-0301
Fuel gas quality: special gas ..... TA 1000-0302
Signs on the engine room door ..... TA 1000-0330
EMC suited execution of cabling and ground connection to/and motor aggregates and control cabinet ..... TA 1000-0505
Handling of electronic components/modules ..... TA 1000-0510
Protective arrangements for setting up electrical installations ..... TA 1000-0515
Lubricating oil for type 2, 3, 4 and 6 GE Jenbacher engines ..... TA 1000-1109
Engine shut-down ..... TA 1100-0105
Installation of GE Jenbacher Units ..... TA 1100-0112
Fuel gases, avoidance of condensate (for GE Jenbacher gas engines) ..... TA 1400-0091
Regulations for running in GE generating set engines ..... TA 1400-0100
Pipings ..... TA 1400-0131
MORIS ignition ..... TA 1502-0068
MPM (MORIS Power Module) ..... TA 1502-0069
SAFI (Sensor Actuator Function Interface) ..... TA 1502-0071
SPA24 (SAFI-Pickup-Amplifier) ..... TA 1502-0072
Gas quantity controller (TecJet 110 and 50 plus) ..... TA 1510-0064
Instructions for checking and mounting of waisted screws ..... TA 1902-0001
Screwing and tightening torques for type 4 engines ..... TA 1902-0213
Employee protection ..... TA 2300-0001

GE Proprietary Information: CONFIDENTIAL! Use or disclosure of data contained on this sheet is subject to the restrictions on the cover or on the first page.

Table of contents

Security tips when connecting GE Jenbacher Installations to the Internet ..... TA 2300-0006

Comments and supplements 7
Comments and supplements 7.1

Appendix 8
Generator 8.1
Gas detector 8.2
Smoke detection system 8.3

GE Proprietary Information: CONFIDENTIAL! Use or disclosure of data contained on this sheet is subject to the restrictions on the cover or on the first page.

Description – Operation

- **Operation** of the system
- **Fault rectification**
- **Description** of the **engine** and the **system**
- Choice of **fuels**
- **Technical instructions**

Maintenance

- **What** inspection work and maintenance work needs to be carried out?
- **When** should the work be carried out?
- **How** should the work be carried out?
- Gathering **operational data**

Spare parts list

GE Proprietary Information: CONFIDENTIAL! Use or disclosure of data contained on this sheet is subject to the restrictions on the cover or on the first page.

- **Selecting** the required spare part
- **Ordering** spare parts
- **Allocating** spare parts

GE Proprietary Information: CONFIDENTIAL! Use or disclosure of data contained on this sheet is subject to the restrictions on the cover or on the first page.

The following symbols are used to highlight certain text passages in your GE Jenbacher**product documentation.**

Caution
Follow these instructions to avoid risk of personal injury or risk of damaging engine or system components.

Disassemble
Disassemble the component as described.

Assembling
Assemble the component as described.

Inspection
Inspect the components or operating materials as described.

Tightening torque
Tighten the nut or bolt to the specified tightening torque.

Clean
Clean the component as described.

Lubricate
Lubricate or grease the component as described.

Reference
Reference to a document or a section of the product documentation. Important information or important note.

Info
Important information or important note.

GE Proprietary Information: CONFIDENTIAL! Use or disclosure of data contained on this sheet is subject to the restrictions on the cover or on the first page.

1 Type plate

1.1 Engine type plate

The engine type plate is located on the crankcase.

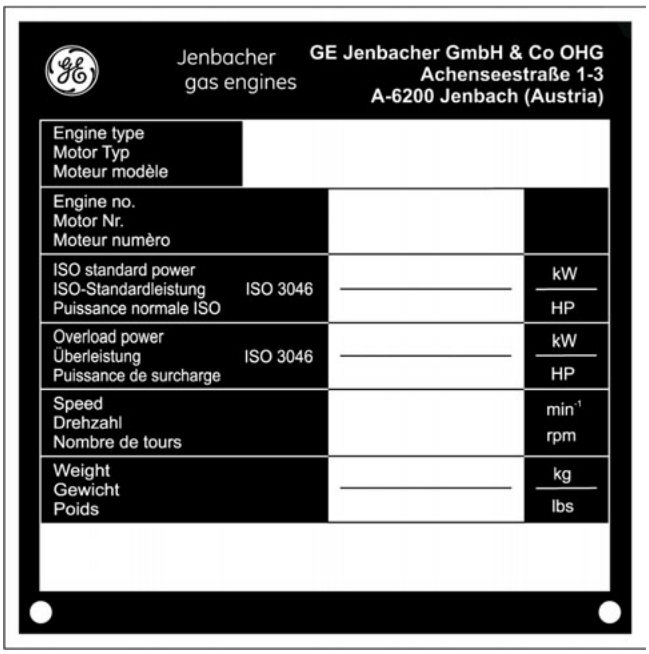

Engine type plate

1.2 System type plate

The system type plate is located on the left-hand longitudinal member of the frame (viewed looking towards the flywheel).

GE Proprietary Information: CONFIDENTIAL! Use or disclosure of data contained on this sheet is subject to the restrictions on the cover or on the first page.

System type plate

Type	Type	Max. ambient temperature (intake air)	Max. ambient temperature:
Serial No.	Serial No.	Rated frequency	Rated frequency
Year of manufacture	Year of manufacture	Rated voltage	Rated voltage
Rated power	Rated power	Rated current	Rated current
Rated power factor	Rated power factor	Mass	Weight
Maximum site altitude of installation	Maximum installation site altitude	Performance class	Performance class

2 Type designation

2.1 Engine type designation

Term	Abbreviation	Key to abbreviation	e.g.
Manufacturer	**Y**	GE Jenbacher	**J** 320 GS C05
Engine type	**2**		J **3**20 GS C05
	3		
	4		
	6		

GE Proprietary Information: CONFIDENTIAL! Use or disclosure of data contained on this sheet is subject to the restrictions on the cover or on the first page.

Term	Abbreviation	Key to abbreviation	e.g.
	9		
No. of cylinders	**8**	8 cylinder in-line engine	J 3**20** GS C05
	12	12-cylinder V-engine	
	16	16-cylinder V-engine	
	20	20-cylinder V-engine	
	24	24-cylinder V-engine	
Mode of operation (e.g.)	**GS**	Gas engine, turbocharged	J 320 **GS** C05
	GSH	Gas engine, tur-bocharged and hot cooled	
Design	**A**	First design	J 320 GS **C**05
	B, C, D, E ...	Modified designs	
Version (e.g.)	**02**	Natural gas; ½ TA-Luft	J 320 GS C**05**
	05	Natural gas; TA-Luft	
	27	Biogas; TA-Luft	

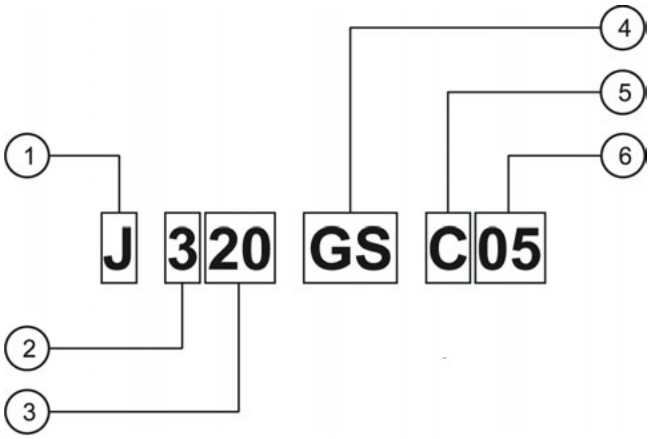

Engine type designation

①	Manufacturer	④	Mode of operation
②	Engine type	⑤	Design
③	No. of cylinders	⑥	Version

2.2 Module type designation

Term	Abbreviation	Key to abbreviation	e.g.
Manufacturer	**Y**	GE Jenbacher	**J**MS 320 GS-N.LC
Unit type (e.g.)	**M**	co-generation plant	J**M**S 320 GS-N.LC
	G	generator set	
	C	compressor set	
Installation type	**S**	stationary	JM**S** 320 GS-N.LC

GE Proprietary Information: CONFIDENTIAL! Use or disclosure of data contained on this sheet is subject to the restrictions on the cover or on the first page.

Term	Abbreviation	Key to abbreviation	e.g.
	C	In container	
Engine type	**2**		JMS **3**20 GS-N.LC
	3		
	4		
	6		
	9		
No. of cylinders	**08**	8 cylinder in-line engine	JMS 3**20** GS-N.LC
	12	12-cylinder V-engine	
	16	16-cylinder V-engine	
	20	20-cylinder V-engine	
	24	24-cylinder V-engine	
Mode of operation (e.g.)	**GS**	Gas engine, turbocharged	JMS 320 **GS**-N.LC
	GSH	Gas engine, turbocharged and hot cooled	
Type of fuel gas	**N**	Natural gas	JMS 320 GS-**N**.LC
	B	Biogas	
	L	Landfill gas	
	P	propane gas	
	S	Special gas	
	N/B	Natural gas /biogas (2-gas operation)	
Exhaust gas purification	**L**	LEANOX engine	JMS 320 GS-N.**LC**
	LC	LEANOX engine with oxidation-type catalytic converter	
	C	3-way catalytic converter	

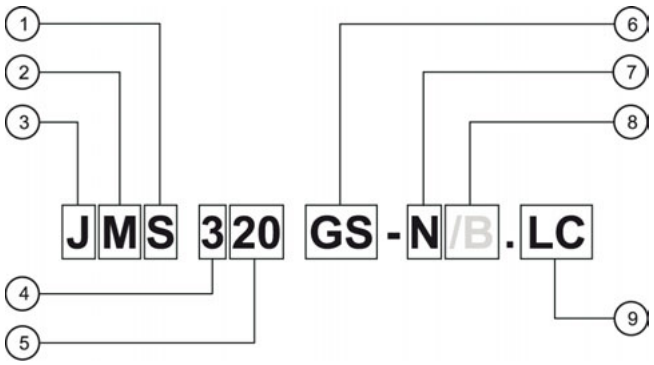

Plant type designation

①	Installation type	⑥	Mode of operation
②	Unit type	⑦	Type of fuel gas

GE Proprietary Information: CONFIDENTIAL! Use or disclosure of data contained on this sheet is subject to the restrictions on the cover or on the first page.

③	Manufacturer	⑧	Alternative type of fuel gas
④	Engine type	⑨	Exhaust gas purification
⑤	No. of cylinders		

GE Proprietary Information: CONFIDENTIAL! Use or disclosure of data contained on this sheet is subject to the restrictions on the cover or on the first page.

The web portal contains the latest online information on our products, drawings, Service Bulletins, SPATSL (the digital spare parts catalogue), background knowledge concerning gas engine technology etc. You can also download interesting documents to your PC via the web portal. The web portal's URL is:

http://information.jenbacher.com

When you first visit the web portal, you will find general information on GE Jenbacher. Since you are a GE Jenbacher-customer, we are offering you the possibility of increased access rights for which you only need to register online.

Registration:

Click on "registrieren" (Registration) and fill in the requested personal data. It is very important to also fill in your regular GE Jenbachercontact person, as he or she is responsible for granting you the increased access rights.

Once you have registered, you will immediately be sent an e-mail containing the web portal link. You will then be able to enter the required password. At this stage, you do not have increased access rights yet as your GE Jenbacher contact person needs to confirm your application. This might take a few days.

Subsequently, you may change your password and personal data. Click on "know-how login" to enter your personal profile, which you may edit yourself.

As soon as your increased access rights have been confirmed, you can enter the increased access web portal below:

GE Proprietary Information: CONFIDENTIAL! Use or disclosure of data contained on this sheet is subject to the restrictions on the cover or on the first page.

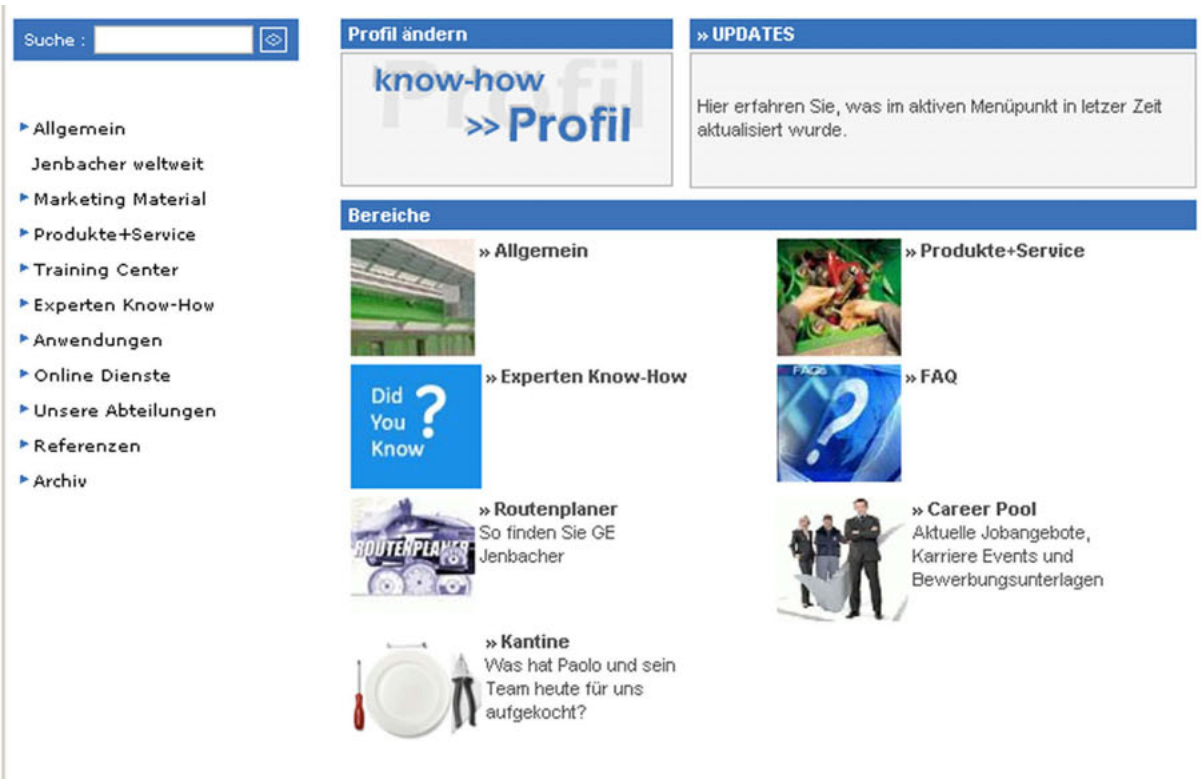

Menu bullets – Tips:

"Produkte +Service" (Products and Service) menu -> "Produkte 50/60 Hz" (50/60 Hz products)
Viewing and downloading drawings and diagrams for various engine types and applications.

"Produkte + Service" (Products and Service) menu -> "Service" -> "Service Datenbank" (Service database)
Online access to all published Service Bulletins and therefore access to all service-related changes and innovations.

"Expert know-how" menu
Comprehensive information on co-generation, fuel gas conditioning, exhaust gas treatment, etc.

For security reasons, you must change your password every 6 months. You will be sent an e-mail reminder containing a link to your personal profile. To extend your increased access rights for another 6 months, just overwrite your existing password in your "know-how profile", repeat the password and click on "absenden" (send).

GE Proprietary Information: CONFIDENTIAL! Use or disclosure of data contained on this sheet is subject to the restrictions on the cover or on the first page.

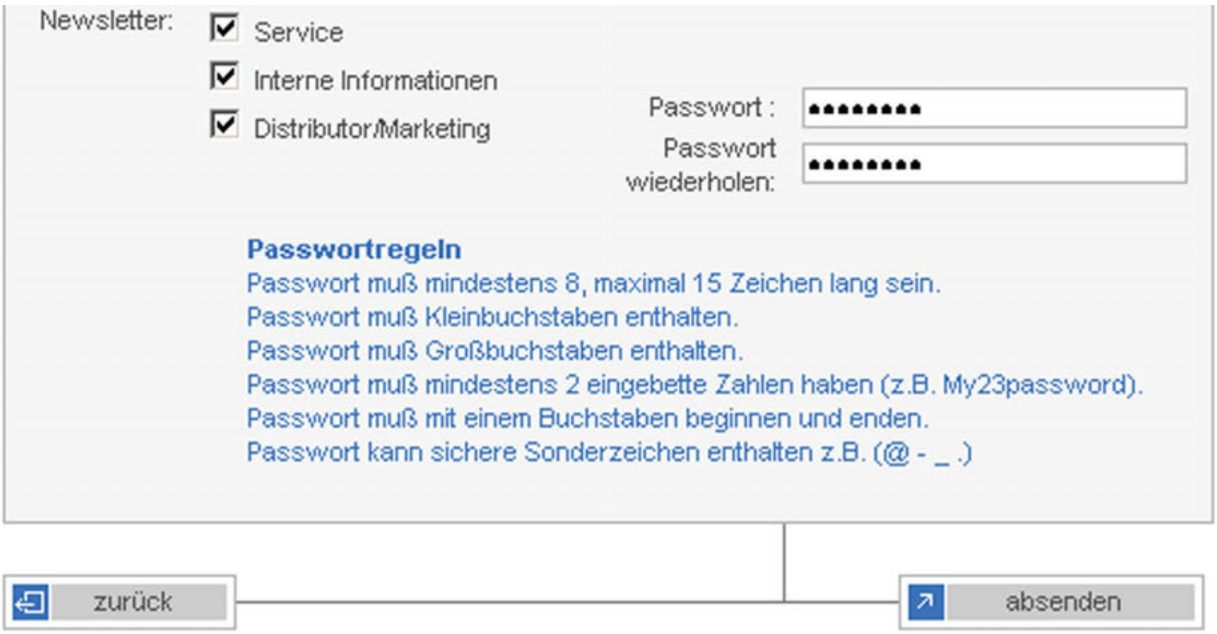

After you have registered, you will receive a regular Newsletter. If you do not wish to receive it, click on "Nein" (No).

If you have any questions, please contact your regular GE Jenbachercontact person.

GE Proprietary Information: CONFIDENTIAL! Use or disclosure of data contained on this sheet is subject to the restrictions on the cover or on the first page.

Dear readers,

The purpose of this product documentation is twofold. Firstly, it should ensure risk-free operation and maintenance of your GE Jenbachersystem.

Secondly, this product documentation should serve as a reference manual covering technical data, requirements and descriptions of engine and system components, and can also be used for troubleshooting and training purposes.

Please help us to meet these aims by sharing your work experiences with us.

Subject:	Rating	Comments
How well do you think our documentation is structured?		
How easy is it to locate information?		
What do you think about our technical vocabulary?		
Is the documentation comprehensive? (Have all of the necessary topics been covered to an appropriate extent?)		

Any additional comments:

Rating: 1 = very good 2 = good 3 = satisfactory 4= adequate 5= inadequate

GE Proprietary Information: CONFIDENTIAL! Use or disclosure of data contained on this sheet is subject to the restrictions on the cover or on the first page.

Please send the completed feedback form to:

GE Jenbacher GmbH & Co OG

Documentation Department
Achenseestraße 1-3
A-6200 Jenbach (Austria)

+43 5244 600 566
robert.pichler@ge.com

GE Proprietary Information: CONFIDENTIAL! Use or disclosure of data contained on this sheet is subject to the restrictions on the cover or on the first page.

GE Jenbacher GmbH & Co OHG
Achenseestraße 1 - 3, A-6200 Jenbach
Tel.: +43 5244 600-0, Telefax: +43 5244 600 548
e-mail: info@gejenbacher.com

AT

GE Jenbacher
Servicecenter Wien
Am Concorde-Park 1/D2, A-2320 Schwechat
Tel.: +43 1 707 95 10, Telefax: +43 1 707 93 28
e-mail: jes.wien@gejenbacher.com

GE Jenbacher
Servicecenter Villach
Magdalener Straße 81, 9506 Villach
Tel.: +43 4242 431 124, Telefax: +43 4242 431 124 5
e-mail: markus.appenzeller@gejenbacher.com

AR

Industrias Juan F Secco SA
Juan Pablo II 5665
Av. Circunvalacion y Av. Urib
Santa Fe
2000 Rosario, Argentinia
Tel.: + 54-341 4094097
e-mail: rosario@ifsecco.com.ar

AU

CLARKE ENERGY AUSTRALIA Pty.Ltd.
Building 1, 2-4 Stirling Street
Thebarton SA 5031
Tel.: +61 (0)8 8290 2100, Telefax: +61 (0)8 8443 5848
e-mail: gregc@clarke-energy.com
www: www.clarke-energy.com

GE Proprietary Information: CONFIDENTIAL! Use or disclosure of data contained on this sheet is subject to the restrictions on the cover or on the first page.

(BD)

Orient Energy Systems Ltd.
11th floor,
Land View Building,
28, Gulshan 2,
1212 Dhaka
Tel.: +88 02 9898837, +88 02 9899268, Telefax: +88 02 8826530
e-mail: info.bd@orient-power.com

(BE)

Sales Representative
Ecogen Energy Systems bvba
Vaart Rechteroever 225
B-9800 Deinze
Tel.: +32 938 64860, Telefax: + +32 938 61134
e-mail: jd@ecogen.be

(BG)

Filter EOOD
87 Aleksander Malinov Blvd.
1715 Sofia
P: +359 2 9745085
F: +359 2 9745087
e-mail: filter@filter.bg
www: www.filter.bg

(BR)

Sales - Jenbacher gas engines
Rod. Jornalista Frco. Aguirre Proenca s/n Km 3,8 - Boa Vista
13064-654 Campinas-SP, Brazil
Tel.: +55 19 2104 6996, Telefax: +55 19 2104 6999
e-mail: gustavo.nielsen@ge.com

GE Proprietary Information: CONFIDENTIAL! Use or disclosure of data contained on this sheet is subject to the restrictions on the cover or on the first page.

BY

Distributor/Service Provider
Filter SZAO
Logoisky Tract and MCAD Crossing, Minsky district,
Administrative Bldg., Office 501
223053 Minsk, Republic of Belarus
Tel.: +375 (172) 95 04 03, Telefax: +375 172 95 96 18
e-mail: Evgeny.Shakovets@filter.by

CA

Integrated Distribution Systems Limited Partnership, dba Detroit Diesel-Allison Canada East
(Ontario, Quebec, New Brunswick, Nova Scotia)
1 Moyal Court
Concord, Ontario L4K 4R8
Tel.(Sales): +1 416 804 2203, Tel.(Service): +1 514 636 0680 Telefax: +1 416 352 5868
e-mail: sales@ddace.com

Distributor/Service Provider
Waterous Power Systems (British Columbia, Alberta, Sask. Manitoba)
10025-51 Avenue Edmonton
Alberta T6E 0A8
Tel.: +1 780 437 8271, Telefax: +1 780 504 0255
e-mail: Sales contacts: gbailey@waterouspower.com and mmcelligott@waterouspower.com
Marketing & Communications contact: lschur@waterouspower.com

CH

IWK Integrierte Wärme und Kraft AG (Sales)
Aspstrasse 11, CH-8472 Oberohringen / Seuzach, Schweiz
Tel.: + 41 52 320 00 00, Telefax: + 41 52 320 00 01
e-mail: joachim.maier@iwk.ch
www: www.iwk.ch

CS

MPD Trade

GE Proprietary Information: CONFIDENTIAL! Use or disclosure of data contained on this sheet is subject to the restrictions on the cover or on the first page.

Carli Caplina 7,
11060 Beograd, Serbia, SCG
Tel.: +381 11 32 93 795 Telefax: +381 11 32 93 600
e-mail: info@kogeneracija.rs
www: kogeneracija.rs; www: biogas.rs

CN

International Office & Packaging Operation
GE Energy (Hangzhou) Co. Ltd.
288 Hongxing Rd., South Bridge
Xiaoshan Economic & Tech. Development Zone
Hangzhou, 311231, P.R. China
Tel.: +86 571 8369 9888, Telefax: +86 571 8286 9107
e-mail: jenbacher.china@ge.com

International Office
GE Energy
Jenbacher Sales China
18/F., Kerry Center , 1 Guanghua Road , Chaoyang District , Beijing 100020
Tel.: +8610 5822 3821, Telefax: +8610 8529 6283
e-mail: jenbacher.china@ge.com

Distributor/Service Provider
Jebsen & Co. (China) Ltd.
30/F., Lee Garden Two, 28 Yun Ping Road,
Causeway Bay, Hong Kong, China
Tel.: +852 2923 8668, Telefax: +852 2882 1588
e-mail: raymondlkchan@jebsen.com
Tel.: +852 2923 8718, Telefax: +852 2882 1588
e-mail: puiwingleung@jebsen.com
www: www.jebsen.com

Distributor/Service Provider
Clarke Energy Equipment Trading (Beijing) Co. Ltd.
Rm 1802

GE Proprietary Information: CONFIDENTIAL! Use or disclosure of data contained on this sheet is subject to the restrictions on the cover or on the first page.

Chaowai SOHO, Chaoyang District
Beijing 100020
Tel.: + 86 10 5900 0561, Telefax: + 86 01 5900 0562, Mobile: +86 13910 575857
e-mail: ian.wang@clarke-energy.com
www: www.clarke-energy.com

Distributor/Service
Shenyang WeiLiDa Engineering Equipment Co. Ltd.
Jiahuan Building No. 39, RM 1306, Heping nan street
Shenyang, Liaoning 110003
Tel.: +86 24 23254011, Fax: +86 24 83251066
e-mail: reader_song@126.com

CZ

Klor GmbH
Manesova 92, 12000 Praha 2
Tel.: +420 2 22 72 00 46, or -534, Telefax: +420 2 22 71 23 85
e-mail: polak.klor@jenbacher.cz
www: www.jenbacher.cz

JMP (Service)
Plynarenska 1, 65702 Brno
Tel.: +420 545 548 263, Telefax: +420 545 548 263
e-mail: jaroslav.hruska@rwe-jmp.cz
www: www.jmpas.cz

DE

Jenbacher GmbH
Carl-Benz-Straße 25
D-67227 Frankenthal (Pfalz)
Tel.: +49 (0) 6233 5110-0, Telefax: +49 (0) 6233 5110-170
Service Hotline: 07000 – 536 - 2224
e-mail: jes.mannheim@gejenbacher.com

GE Proprietary Information: CONFIDENTIAL! Use or disclosure of data contained on this sheet is subject to the restrictions on the cover or on the first page.

DK

GE Jenbacher Denmark
Samsøvej 10
DK-8382 Hinnerup
Tel.: +45 86966788, Telefax: +45 86967072
e-mail: jenbacher.scandinavia@ge.com

DO

Dominikanische Republik
Sales Representative / Service Provider
The Power Service Group, S.A.
Door Power Service S.A.
Calle Vicente Celestino Duarte 2
Zona Colonial , DN
Santo Domingo
Tel.: +1 809 285 0016, Telefax: +1 809 285 0017
e-mail: info@carpsg.com

DZ

Algeria
Distributor / Service Provider
Amimer Energie SARL
za Adha Seddouk, 06500 W. Bejaia, Algeria
Tel.: 00 213 34323154, Telefax.: 00 213 34323135
e-mail: amarboukheddami@amimer.com

EE

AS Filter
Läike tee 9, Peetri küla, Rae vald
75312 Harjumaa
Tel.: +372 606 6666, Telefax: +372 606 6650
e-mail: filter@filter.ee
www: www.filter-group.com

GE Proprietary Information: CONFIDENTIAL! Use or disclosure of data contained on this sheet is subject to the restrictions on the cover or on the first page.

EG

International Office
GE International Inc.
54 Lebanon Street,
El Mohandessin, Floor 13
Cairo
Tel.: + 20 2 3301 8000
e-mail: jenbacher.egypt@ge.com

Sakr Power Systems
South Kattamyia, Sokhna old road, New Cairo
Third district, Block # 12
Tel.: +20 10 50 239 47, Telefax: +20 10 17 246 18
e-mail: egypt@sakr.com

EN

Clarke Energy Ltd.
Power House, Senator Point, South Boundary Road,
Knowsley Industrial Park
Liverpool L33 7RR
Tel.: + 44 151 546 4446, Telefax: +44 151 545 5714
e-mail: alanf@clarke-energy.com
www: www.clarke-energy.com

ES

GE Jenbacher Spain and Portugal
Avda. del Camino de lo Cortao, 34 - Nave 8
E-28703 San Sebastián de los Reyes (Madrid)
Tel.: +34 91 658 6800, Telefax: +34 91 652 2616
e-mail: jenbacher.iberica@ge.com

GE Jenbacher Spain and Portugal
Ctra. de Hospitalet, 147-149 | Cityparc - Ed. Roma
E-08940 Cornellà de Llobregat (Barcelona)

GE Proprietary Information: CONFIDENTIAL! Use or disclosure of data contained on this sheet is subject to the restrictions on the cover or on the first page.

Tel.: +34 93 475 1300, Telefax: +34 93 475 1301
e-mail: jes.barcelona@gejenbacher.com

FI

Höyrytys Oy
Palokorvenkatu 2
FIN-04261 Kerava
Tel.: +358 468 508 070, Telefax: +358 941 746 100
e-mail: jorgen.barlund@hoyrytys.fi

FR

Clarke Energy France SAS
Z.A. de la Malle
RD 6
13320 Bouc Bel Air
Frankreich
Tel.: +33 442 907 575, Telefax: +33 442 907 576
e-mail: info.michels@clarke-energy.com
www: www.clarke-energy.com

HU

International Office & Packaging Operation
GE Energy Jenbacher Hungary (Service)
Kisret ut1
H-2112 Veresegyhaz
Tel.: + 36 2858 7376 , Telefax: + 0036 2858 7491
e-mail: jenbacher.hungary@ge.com

HR

TZV Gredelj d.o.o. (Service)
Trnjanska Cesta 1, HR-10000 Zagreb
Tel.: +385 1 6111 311, Telefax: +385 1 6110 121
e-mail: ozbolt@tzv-gredelj.hr

GE Proprietary Information: CONFIDENTIAL! Use or disclosure of data contained on this sheet is subject to the restrictions on the cover or on the first page.

Sales Representative
GETES d.o.o.
Fantovo 15
51414 Icici
Tel.: + 00385 51 704620, Telefax: + 00385 51 704620
e-mail: mail@getes.hr

ID

Navigat Energy Pte. Ltd.
139 Cecil Street, 04-02 Cecil House,
Singapore 069539, Rep. of Singapore
Tel.: +62 21 572 4944, Telefax: +62 21 572 7614
e-mail: nils@navigat.com

IE

Distributor/Service Provider
Clarke Energy Ltd.
Power House, Senator Point, South Boundary Road,
Knowsley Industrial Park, Liverpool L33 7RR
Telephone: + 44 151 546 4446, Fax: + 44 151 545 5714
e-mail: alanf@clarke-energy.com
www: www.clarke-energy.com

Distributor/Service Provider
Clarke Energy Ireland Ltd.
1 Stokes Place, St. Stephens Green, Dublin 2, Ireland
Tel.: +353 879 804002
e-mail: johnc@clarke-energy.com
www: www.clarke-energy.com

IL

Madei Taas Industrial Controls Ltd.
2 Hacharoshet st., Kfar-Saba 44641
Tel.: +972 9 7669903, Telefax: +972 9 7669904

GE Proprietary Information: CONFIDENTIAL! Use or disclosure of data contained on this sheet is subject to the restrictions on the cover or on the first page.

e-mail: elimatz@madeitaas.co.il
www: www.madeitaas.co.il

IN

Clarke Energy India Private Limited
"Shivkiran", Lane no. 4, Dahanukar Colony, Kothrud
Pune 411 038
Tel.: +91 20 30241777
Telefax: +91 20 30241800
e-mail: deodatta.bhishikar@clarke-energy-india.com
www: www.clarke-energy-india.com

International Office
GE India Industrial Pvt. Ltd.
A-1, 2nd Floor, Golden Enclave
Corporate Towers, Airport Road
560 017 Bangalore
Tel.: +91 80 4150 1406, Telefax: +91 80 2520 3860
e-mail: jenbacher.india@ge.com

Trinidad & Tobago
Distributor/Service Provider
Water Tech Limited
10 Nelson Road
Freeport
Trinidad, West Indies
Tel.: +868 673 5453, +868 673 2061, Telefax: +868 673 1620
e-mail: sudesh@watertech-ltd.com

ID

Distributor/Service Provider
Navigat Energy Pte. Ltd.
139 Cecil Street, 04-02 Cecil House, Singapore 069539,
Rep. of Singapore, Indonesia
Tel.: +62 21 5724944, Telefax: +62 21 5727614

GE Proprietary Information: CONFIDENTIAL! Use or disclosure of data contained on this sheet is subject to the restrictions on the cover or on the first page.

e-mail: nils@navigat.com

IT

GE Jenbacher Italy
Via Crocioni, 46 / H, Casella Postale n. 41 Aperta
I-37012 Bussolengo (VR)
Tel.: +39 045 6760211, Telefax: +39 045 6766322
e-mail: jes.verona@gejenbacher.com

IQ

Distributor / Service Provider
Sakr Power Systems SAL
Kartaba Road, Industrial Area
Halata (Jbeil), Lebanon
Tel.: +961 9 444888, Telefax: +961 3 811108
e-mail: info@sakr.com
www: www.sakr.com

JP

Hitachi Engineering & Services Co., Ldt.
2-2 Kandatacho Chiyoda-ku
Tokyo 101-0046
Tel.: +81 3 5297 0514, Telefax: +81 3 5297 0517
e-mail: osamu.fukunaga.ux@hitachi.hes.com

Hitachi Engineering & Services Co., Ldt.
15-1, Higashionuma-cho, 1-chome
Hitachi-shi
Ibaraki-ken, 316-0023
Tel.: +81 294 36 7996, Telefax: +81 294 36 9637
e-mail: shigehisa.sugita.yp@hitachi-hes.com

Osaka Gas Engineering Co., Ldt.
1-4-100, Hokuko, Konohana-Ku

GE Proprietary Information: CONFIDENTIAL! Use or disclosure of data contained on this sheet is subject to the restrictions on the cover or on the first page.

Osaka 554-0033
Tel.: +81 6 4804 2600, Telefax: +81 6 4804 2601
e-mail: t-joh@oge.co.jp

JO

Distributor / Service Provider
Sakr Power Systems SAL
Kartaba Road, Industrial Area
Halata (Jbeil), Lebanon
Tel.: +961 9 444888, Telefax: +961 3 811108
e-mail: info@sakr.com
www: www.sakr.com

KP

RNP Enterprise Ltd.
Room 301, Chung Won Bldg. 170-3
Bang - I - Dong
Song Pa-Ku, Seoul 138-050, Korea
Tel.: +82 2 412 3700, Telefax: +82 2 412 3044
e-mail: rnp@rnp-ent.co.kr

KZ

Turkuaz Machinery Ltd.
Rayimbek ave. 160A,
50016 Almaty
Tel.: +7 727 273 19 95, Telefax: +7 727 273 15 68
e-mail: machinery@turkuaz.kz
www: turkuazmachinery.kz

Promelectronika-K TOO
Bogenbay batyra str 132, Office 113.105
050026 Almaty.
Tel.: +77 272 965560
Fax.: +77 272 721983

GE Proprietary Information: CONFIDENTIAL! Use or disclosure of data contained on this sheet is subject to the restrictions on the cover or on the first page.

e-mail: aponomarev@intma.ru

www: www.intma.kz

KW

Abdulaziz Abdulmoshin Al-Rashed Sons Co. WLL

Building No. 225-227, Block 2, next to Al-Watan TV,

Afdiya, Kuwait

Tel: 00965-24376740

Fax: 00965-24339291

Email: info@al-rashed.com

www: www.al-rashedholdings.com

LB

Distributor / Service Provider

Sakr Power Systems SAL

Kartaba Road, Industrial Area

Halata (Jbeil)

Tel.: +961 9 444888, Telefax: +961 3 811108

e-mail: info@sakr.com

www: www.sakr.com

LI

IWK Integrierte Wärme und Kraft AG (Sales)

Aspstrasse 11, CH-8472 Oberohringen / Seuzach, Schweiz

Tel.: + 41 52 320 00 00, Telefax: + 41 52 320 00 01

e-mail: joachim.maier@iwk.ch

www: www.iwk.ch

LT

UAB Filter

Draugystes Str. 19, 3031 Kaunas

Tel.: +37 037 400 380, Telefax: +370 0872 1399

e-mail: filter@filter.lt

www: www.filter.lt

GE Proprietary Information: CONFIDENTIAL! Use or disclosure of data contained on this sheet is subject to the restrictions on the cover or on the first page.

LU

ENERGOLUX S.A.
12, rue de Bitbourg, L-1273 Luxembourg-Hamm
Tel.: +352 43 42 43-1, Telefax: +352 43 68 33
e-mail: enerlux@pt.lu

LV

SIA Filter
21 Aizkraukles street, 1006 Riga
Tel.: + 371 7 556765, Telefax: + 371 70550224
e-mail: filter@filter.lv
www: www.filter-group.com

MY

JD Energy Systems Sd. Bhd.
Sector 1, No 1
Jalan Lada Hitam Satu 16/12A
Shah Alam, Selangor Darul Ehsan
Malaysia 40200
Tel.: +603 5569 1000, Telefax: +603 556 92660
e-mail: chanhh@jdgroup.com.my

NG

Distributor/Service Provider
Clarke Energy Nigeria Ltd.
13 B Obanta Street, Apapa, Lagos, Nigeria
Tel.: +234 181 56723
e-mail: patrick.nzekwe@clarke-energy.com
www: www.clarke-energy.com

NL

GE Jenbacher Netherlands
Kelvinring 58

GE Proprietary Information: CONFIDENTIAL! Use or disclosure of data contained on this sheet is subject to the restrictions on the cover or on the first page.

NL-2952 BG ALBLASSERDAM
Tel.: +31 (0) 88 0019700, Telefax: +31 (0) 88 0019701
e-mail: jenbacher.netherlands@ge.com

PH

Desco Incorporated
Laguna International Industrial Park
Lot 2 Block 3, Interstar Street
Barangay Mamplasan, City of Binan
Laguna, Philippines 4024
Tel.: +632 520 8149 to 50
www: www.deco.ph

PK

ORIENT Energy System Ltd.
Plot # 16, Sector 24,
Korangi Industrial Area,
Karachi 75950, Pakistan
Tel.: +92 21 507 2091-4(four lines), Telefax: +92 21 507 2095
e-mail: m.saeed@orient-power.com

PL

KWE - Technika Energetyczna Sp.z o.o.
Ul. Miedziana 38
43-305 Bielsko-Biała, Polen
Tel.: +48 338 215 093, Telefax: +48 338 216 562
e-mail: kwe@kwe.com.pl
www: www.kwe.pl

PT

ECOPOWER – EQUIP. SERV. ENERGIA, UNIPESSOAL, LDA.
ATT: Raul Assunção
Carregado Park, Arm. D,
Lugar da Torre,

GE Proprietary Information: CONFIDENTIAL! Use or disclosure of data contained on this sheet is subject to the restrictions on the cover or on the first page.

2580-512 Carregado
LISBOA – PORTUGAL
e-mail: ecocogen@ecopower.pt
www: www.ecopower.pt

RO

SC Total Eurobusiness S.A.
Str. Calea Rahovei nr. 266-268 Corp D
Etaj 3; Sector 5
050912 Bucharest
Tel.: +40 21 408 08 80 221, Telefax: +40 21 423 23 15
e-mail: office@teb.com.ro

RU

International Offices
GE Energy Russia
27, Electrozavodskaya Street, bld. 8, floor 5
107023 Moscow, Russia
Tel.: +7 495 937 11 11; +7 495 9 81 13 13, Telefax: +7 495 937 11 12
e-mail: jenbacher.russia@ge.com

ZAO Sigma Services (Service)
h. 15. bld. 33, M. Kaluzhskaya str.
117071 Moscow
Tel.: +7 095 935 7835, Telefax: +7 095 935 7888
e-mail: skoff@sigmat.ru

ZAO VADO International GUS (Sales)
Krasnaja Presnja 28
123022 Moskau - Russische Föderation
Tel.: +7 095 363 95 05, Telefax: +7 095 363 9509
e-mail: info@vado.ru
www: www.vado.biz

Focused on the North West Region

GE Proprietary Information: CONFIDENTIAL! Use or disclosure of data contained on this sheet is subject to the restrictions on the cover or on the first page.

Distributor/Service Provider
Vapor CJSC
B. Moskovskaya 8/2 Letter A,
191002 Saint – Petersburg
T: + 7 812 448 00 70
Email: spb.office@vapor.ru
Web: www.vapor.ru

Focused on the South Ural Region
Distributor/Service Provider
Intma CJSC
2-nd Kabelnaya str., 2, bld. 9,
111024 Moscow
T: +7 495 974 1295
Email: d_glushich@intma.ru
Web: www.intma.ru

Focused on the South Region
Distributor/Service Provider
Max Motors LLC
19/4, Kurortniy prospect
354000 Sochi, RUSSIA
Tel.: +7(8622) 62-77-99(multichannel), Telefax: +7(8622) 62-61-16
Call center 8(800)505-77-99(calls are free of charge for Russian Federation customers!)
e-mail: info@max-motors.ru
www: www.max.motors.ru

SA

Ali A. Tamimi Trading Company
2nd Industrial City
Al Baqaiq Street
Khobar, 31952
Tel.: +966 3 868 1037 ext. 100
Fax.: +966 3 868 2733
e-mail: DTCO@tco.com.sa

GE Proprietary Information: CONFIDENTIAL! Use or disclosure of data contained on this sheet is subject to the restrictions on the cover or on the first page.

www: www.al-tamimi.com

SE

GE Jenbacher Denmark
Industrivej 19, DK-8881 Thorsø
Tel.: + 45 8 6966788, Telefax: + 45 8 6967072
e-mail: jenbacher.scandinavia@ge.com

SG

International Office
GE Pacific Pte Ltd.
240 Tanjong Pagar Road,
11-00 GE Tower
Singapore 088540
Tel.: +65 6326 3659, Telefax: +65 6326 3623
e-mail: jenbacher.singapore@ge.com

SI

IMP Inzeniring d.d.
Dunajska cesta 7, SLO-1113 Ljubljana
Tel.: +386 1300 9024, Telefax: +386 1300 9060
e-mail: borut.jurca@imp.si
www: www.imp.si

TES d.o.o.
Gregorciceva 3, Maribor 2000
Tel.: +386 2 229 4726, Telefax: +386 2 229 4727
e-mail: borut.bencic@tes.si or sasa.rodosek@tes.si
www: www.tes.si

SK

EMES s.r.o
Trieda SNP 75
974 01 Banska Bystrica

GE Proprietary Information: CONFIDENTIAL! Use or disclosure of data contained on this sheet is subject to the restrictions on the cover or on the first page.

Slovakia

Tel.: +421 48 4145183, Telefax: +421 48 4145183

e-mail: emes@bb.psg.sk

TH

Italthai Industrial Co., Ltd.

2013 New Petchburi Road

Bangkapi, Huay Kwang

10310 Bangkok / THAILAND

Tel.: +662 3191031-40, Telefax: +662 3182654

e-mail: sarayuth@italthai.co.th; gasengine@italthai.co.th

www: www.italthai.co.th

TK

Topkapi Endüstri Mallari Ticaret A.S.

Pazartekke, Millet Cad. No.180-184

Topkapi

34104, Istanbul

Tel.: +90 212 534 04 10, Telefax: +90 212 524 58 46

e-mail: info@topkapigroup.com.tr

www: www.topkapigroup.com.tr

TN

Distributor/Service Provider

Clarke Energy Tunisie SARL

Immeuble Sarra Bb Principle, Les Berges du Lac

Tunis

Tel.: +216 71 96 52 99, Fax: +216 25 39 04 90

e-mail: Ali.Hjaiej@clarke-energy.com

www: www.clarke-energy.com

UA

Sinapse

7, Vanda Vasilevskaya Str.

GE Proprietary Information: CONFIDENTIAL! Use or disclosure of data contained on this sheet is subject to the restrictions on the cover or on the first page.

03055 Kiev
Tel.: +38 044 238 0967 or +38 044 2380966, Telefax: +38 044 2380967 or +38 044 2380970
e-mail: lvm@sinapse.ua, oksana@sinapse.ua, www.sinapse.ua; www.cogeneration.com.ua

US

GE Energy
Jenbacher Sales and Service USA
5244 N. Sam Houston Parkway East,
Houston, TX 77032
Tel.: +1 832 295 5600
e-mail: jenbacher.us@ge.com

Distributor/Service Provider
Northeast Energy Systems, a division of Penn Detroit Diesel Allison
(ME, VT, NH, MA, PA, NY, CT, DE, NJ, RI, OH) Corporate Headquater
8330 State Road, Philadelphia PA 19136
Telephone: +1 215 335 5010, Fax: +1 215 335 2163
e-mail: aclark@neesys.com or ffarrand@neesys.com
www: www.neesys.com

Northeast Energy Systems, a division of Penn Detroit Diesel Allison
(ME, VT, NH, MA, PA, NY, CT, DE, NJ, RI, OH)
86 Finnell Drive, Units 13 and 14
Weymouth, Massachusetts 02188
Telephone: + 1 781 340 9640, Fax: + 1 781 340 9649
e-mail: aclark@neesys.com or ffarrand@neesys.com
www: www.neesys.com

Distributor/Service Provider
Western Energy Systems, a division of Penn Detroit Diesel Allison
(AK, CA, HI, OR)
499 Nibus Street, Brea, California 92821
Telephone: +1 714 529 9700
e-mail: aclark@weesys.com or ffarrand@neesys.com

GE Proprietary Information: CONFIDENTIAL! Use or disclosure of data contained on this sheet is subject to the restrictions on the cover or on the first page.

Inland Power Group. (MN, MI, WI, IA, IL, IN)
13015 W. Custer Avenue,
Butler, WI 53007
Tel.: +1 262 781 7100, Telefax: +1 262 783 8974
e-mail: jgoing@inlandpowergroup.comor tpalmer@inlandpowergroup.com
www: www.inlandpowergroup.com

Smith Power Products (WA, MT, ID, WY, NV, UT, AZ, CO, KS, MO, NE, NM, ND, OK, SD, TX)
3065 West California Ave.
Salt Lake City, UT 84104
Tel.: +1 801 415 5000, Telefax: +1 801 415 5700
e-mail: mhayes@smithdda.com
www: smithpowerproducts.com

GENEVA LLC, DBA Nixon Power Services Company
(AR, LA, MS, TN, AL, GA, KY, FL, SC, NC, VA, WV, MD)
5038 Thoroghbred Lane
Brentwood, TN 37027
Tel.: +1 615 309 5823
e-mail: msiebert@nixonpower.com

YE

Dome Trading and Contracting Company LTD
Villa Nr. 18, Street Nr. 38 (off Hadda Rd.)
Sana'a. PO Box 16187
YEMEN
Tel Office: +9671414023
Fax: +9671414044
e-mail: azizdaer@dome.com.ye
www: www.domeint.com

ZA

South Afrika/Botswana/Lesotho/Mozambique/Swaziland
Sales Representative/Service Provider
Agaricus Trading cc

GE Proprietary Information: CONFIDENTIAL! Use or disclosure of data contained on this sheet is subject to the restrictions on the cover or on the first page.

P O Box 1535
Linkhills
3652
Kwazulu-Natal
South Africa
Tel.: + 27 31 7633222, Telefax: + 27 31 7633041
e-mail: paul@agaricus.co.za
www: www.agaricus.co.za

GE Proprietary Information: CONFIDENTIAL! Use or disclosure of data contained on this sheet is subject to the restrictions on the cover or on the first page.

This GE Jenbacher Product Documentation consisting of :

- **Description – Operation**
- **Maintenance**
- **spare parts list**

was created by the Technical Documentation Department of GE Jenbacher.

If you have any questions, problems or suggestions regarding this Product Documentation, please contact us.

Address:	GE Jenbacher GmbH & Co OG A-6200 Jenbach | Austria
Telephone:	+43 | 5244| 600-3064
Fax:	+43 | 5244| 600-566
E-mail:	robert.pichler@ge.com

GE Proprietary Information: CONFIDENTIAL! Use or disclosure of data contained on this sheet is subject to the restrictions on the cover or on the first page.

1 Designated use 1
2 Foreseeable misuse 1

1 Designated use

The designated use is the use of the engine which must be applied as described in the operating instructions.

GE Jenbacherco-generation plants and generator modules are designed for decentralised production of electrical energy.

For this purpose a gas engine is used to power a high-voltage or low-voltage three-phase generator.

Co-generation plants also utilise the thermal energy from engine cooling water, engine oil, mixtures and exhaust gases.

Any use not described in the operating or maintenance instructions is not considered a designated use. GE Jenbacher accepts no liability for the consequences of any non-designated use.

⚠ GE Jenbacher systems are designed individually to the customer's specifications. These specific requirements also clearly define the designated use of the system and its proper operating conditions. Any subsequent changes to the system must therefore always be approved by GE Jenbacher.

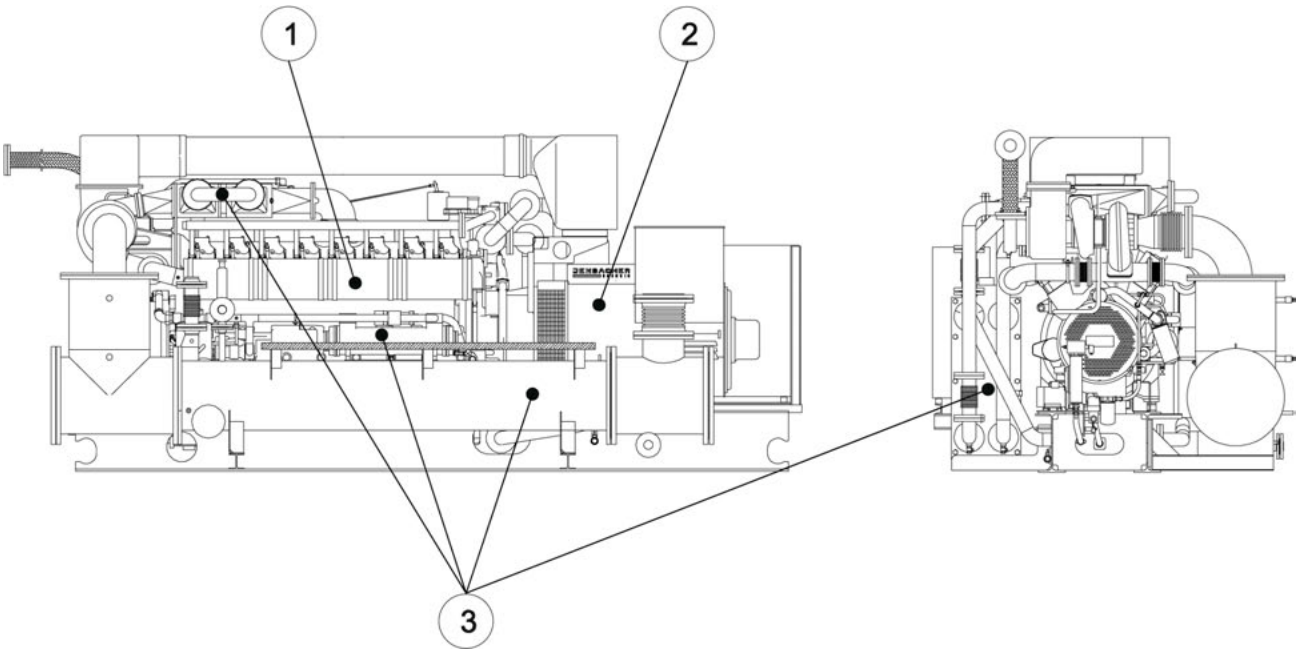

①	Gas engine	③	Heat exchanger
②	Generator		

2 Foreseeable misuse

A reasonably foreseeable misuse is any use of the engine which may arise in a way not intended in the operating instructions but can arise from easily foreseeable human behaviour.

GE Proprietary Information: CONFIDENTIAL! Use or disclosure of data contained on this sheet is subject to the restrictions on the cover or on the first page.

In order to prevent a reasonably foreseeable misuse, GE Jenbacher has carried out a risk analysis as described in DIN EN 14121.

The residual risks and possible misuses revealed in these analyses have been reduced to a minimum on the basis of the PREVENT-PROTECT-WARN principle. For risks which cannot be constructively prevented, you will find hazard signs on the plant and appropriate warnings in the operating instructions.

Misuses constitute a danger to operators, third parties and the plant itself.

You will find information on how to deal with the residual risks to prevent health and safety from being compromised in the safety instructions TI 2300-0005, work instructions and your operating instructions.

Examples of residual risks include hot surfaces, electrical hazards (high voltage), poisonous gases, liquids under pressure, heavy components, risk of trapping fingers, incorrect behaviour in the event of an alarm, fall from height, danger of slipping, failure to follow lock-out/tag-out procedures and working on unsecured plant while still running.

Unqualified staff are prohibited from operating or working on GE Jenbacher plants or entering the engine room.

Familiarise yourself with the requirements in TI 2300-0001 “Employee protection”, TI 1100-0111 “General conditions – Operation and maintenance”, official regulations on safety at work and the relevant parts of the safety instructions.

Never operate GE Jenbacher plants outside their operational design constraints for and technical specifications.

Familiarise yourself with the requirements in TI 1100-0110 “Boundary conditions for GE Jenbacher gas engines”, the specified maintenance plan and the technical data recorded for your plant (e.g. performance, gas quality, gas type, explosive environment, temperature, ventilation, monitoring, program and software versions, etc.).

While the plant is operating, all safety devices and monitors specified by GE Jenbacher and official bodies must be functional and should not be bypassed or removed.

Use only operating fluids, tools and spare parts approved by GE Jenbacher and official bodies for operation, maintenance, servicing and cleaning. Familiarise yourself with the requirements in TI 1100-0111 "Operation and maintenance", the official regulations and the approved operating fluids (engine oil, cooling-water additives, lubricants, etc.) as stated in your operating instructions.

GE Jenbacher plants must be installed in accordance with GE Jenbacher specifications. Familiarise yourself with the requirements in the arrangement plan, the technical diagram, the circuit diagram, the interface list, the technical specification for the control system and information in the technical instructions for installation, lifting and setting up.

Familiarise yourself with the disposal requirements and the special handling needed for hazardous materials or materials subject to mandatory disposal.

You should also familiarise yourself with the requirements in safety guidelines TI 2300-0005, all statutory regulations and the danger and disposal information on the product concerned.

GE Proprietary Information: CONFIDENTIAL! Use or disclosure of data contained on this sheet is subject to the restrictions on the cover or on the first page.

CE Declaration of Conformity -ORIGINAL

according to Directive 2006/42/EC (Machine Directive).

We,

GE Jenbacher GmbH & Co OHG
Achenseestraße 1 – 3
A-6200 Jenbach

herewith declare, on our responsibility, that the following equipment

Generator set **: JGS 420 GS-L.L**

Generator No.: 1021618

together with accessory electrical plant, lifting gear and all electrical and mechanical equipment supplied and directly associated with it

to which this Declaration refers, conforms to the relevant fundamental safety objectives of CE Directives **2006/42/EC (Machinery Directive)**, **2004/108/EC** (Electromagnetic Compatibility), **2006/95/EC** (Low-Voltage Directive - electrical units, to be used within specific voltage limits) and **97/23/EC** (Pressure Equipment).

The following standards and technical specifications, among others, have been taken into account in order to properly satisfy the requirements specified in the CE Directives:

EN ISO 14121-1:2007	Safety of machinery – Risk assessment
EN ISO 12100-1:2009	Safety of Machinery: Basic Concepts, General Principles for Design - Part 1: Basic terminology, methodology
EN ISO 12100-2:2009	Safety of Machinery: Basic Concepts, General Principles for Design - Part 2: Technical principles
EN 12601:2001	Reciprocating Internal Combustion Engine Driven Generating Sets - Safety.
EN 60204-1:2006	The safety of basic machine terms, - electric equipment of machines.
EN 60439-1:1999 +A1:2004	Combinations of low-voltage switchgear.
DVGW	Gas appliances are CE-DVGW-certified (EC Type-Examination Certificate in accordance with the EC Gas Appliance Directive 90/396/EEC) and the fuel gas lines and controlled gas pressure system on the module have been leak-tested in accordance with DVGW- TRGI 1986 – Work Sheet G600 (Technical Guidelines for Gas Installations issued by the German Technical and Scientific Association for Gas and Water).
EN 61000-6-1:2007	Electromagnetic compatibility (EMC) – Part 6-1: Generic standards - immunity for residential, commercial and light industrial environments
EN 61000-6-4:2007	Electromagnetic compatibility (EMC) – Part 6-4: Generic standards - Generic standard interference emission for industrial environment.

Jenbach, 2009-12-29

GE Proprietary Information: CONFIDENTIAL! Use or disclosure of data contained on this sheet is subject to the restrictions on the cover or on the first page.

Dr. Volker Schulte
General Manager
Technology

CE Documentations Officer:
Ing. Harald Hochrainer, Manager
Documentation GE Jenbacher GmbH & Co
OHG Achenseestraße 1-3, 6200 Jenbach,Austria
is authorised to compile technical documents

Country: USA
Issued: 2011-11
Language: EN

GE Proprietary Information: CONFIDENTIAL! Use or disclosure of data contained on this sheet is subject to the restrictions on the cover or on the first page.

1 General conditions - Operation and maintenance 1
1.1 Basic conditions 1
1.2 Cooler/heat exchanger (GE Jenbacher scope of supply) 1
1.3 Interfaces/limits of supply 1
1.4 Maintenance staff 2
1.5 Safety instructions 2
1.6 Risk assessment 2
1.7 Start-up conditions 2
1.8 Failures 2
1.9 Recording operational data, maintenance record sheet 4
1.10 Spare parts 4
1.11 Lubricating oil 5
1.12 Spark plugs 5
1.13 Elastomer components 5
1.14 Decommissioning the plant 5
1.15 Welding work on the module 5
1.16 Components coming into contact with exhaust gas 6
1.17 Fuels 6
1.18 Fuel gas quality 6
1.19 J624 TSTC turbocharger unit 6

1 General conditions - Operation and maintenance

1.1 Basic conditions

The boundary conditions for GE Jenbacher gas engines as specified in Technical Instruction No. 1100-0110 must be observed. The work specified in the operational-data sheet must be carried out and this sheet must be filled in correctly. All specified maintenance work must be performed regularly, expertly and on schedule. Knock-free operation must be guaranteed.

1.2 Cooler/heat exchanger (GE Jenbacher scope of supply)

When integrated into the hot water system, appropriate measures must be taken to prevent dirt or sediment building up in these components on the water side.

Refer to technical diagram and technical instructions for settings.

1.3 Interfaces/limits of supply

The conditions specified must be fulfilled and the equipment to be supplied for each specific system in accordance with the boundary conditions, the technical diagram, the schematic diagram, the interface list and the technical specification for the control system must be available within the limits of supply/interfaces. Failure to comply with these requirements may have an adverse effect on the characteristics of the product and on its reliability of operation and, in the end, restrict or invalidate warranty claims.

GE Proprietary Information: CONFIDENTIAL! Use or disclosure of data contained on this sheet is subject to the restrictions on the cover or on the first page.

1.4 Maintenance staff

Work on the plant may only be carried out by specialist staff who have received relevant electrical and mechanical training. It is possible to conclude service contracts with GE Jenbacher, withGE Jenbachersubsidiaries or authorised specialist contractors. The intervals stated in the maintenance plan are average empirical values. Where there is a lack of proper operation and maintenance (such as defective oil care, large accumulations of dust or other problematic circumstances), maintenance operations have to be carried out before the specified intervals.

The above can only be judged by the operator. If irregularities are found during the daily inspection, especially during the warranty period (abnormal sounds or noises, etc.), the operator must take action to minimise any damage (e.g. by immediately switching off the engine, investigating the cause of the irregularity and rectifying it, and/or notifying the GE Jenbacher customer service department).

Upcoming maintenance work must be carried out before the maintenance interval is reached to ensure smooth operation or to avoid interruptions in operation, for example, during the heating season. Maintenance intervals may not be extended to avoid downtime during the heating season.

1.5 Safety instructions

Always follow the safety instructions in the operator's manual. Statutory safety regulations and accident prevention rules must be observed. Before performing any maintenance work on the plant, the customer must make sure that the relevant safety instructions are being followed. For work which may only be carried out when the engine has been shut down, the system must be shut down as specified in TI 1100-0106 and measures taken to ensure that it cannot be started accidentally.

1.6 Risk assessment

The plant operator (employer) is required to undertake a risk assessment to determine the measures necessary to effect the safe availability and use of the plant and equipment and to comply with all official and quasi-official safety rules and laws governing the operation of the plant. The employer must take the necessary measures to ensure that employees are only provided with equipment which is suitable for the conditions pertaining at the workplace and guarantees their health and safety if used properly.

The risk assessment will cover approval, planning, assembly, commissioning, operation, maintenance, servicing and shutting down.

The risk assessment to be performed by the plant operator and the official and quasi-official safety rules and laws may give rise to acceptance tests, inspections and maintenance operations which are not included in the Maintenance Plan. It is the operator’s responsibility to implement and enforce these additional measures.

1.7 Start-up conditions

All GE Jenbacherengines are fitted with a preheating system for the engine cooling water. Only preheated engines with a cooling water temperature of >55°C may be started, loaded and operated at full-load, otherwise engine damage may result.

1.8 Failures

When a failure results in the engine automatically being switched off by the module control, the cause of the failure should be remedied first before the module is started again! It is not permissible simply to reset a failure and then

GE Proprietary Information: CONFIDENTIAL! Use or disclosure of data contained on this sheet is subject to the restrictions on the cover or on the first page.

restart the engine, as critical or wear-induced damage could possibly result in premature replacement of various components.

Remote resetting: Based on the risk category selected by the customer (0-4), failures resulting in the installation being switched off can be reset using remote access to the visualisation system (max. 5 times every 6 hours' running under load).

Failures:	Diane No.:	National restrictions	Risk category
Misfiring	1047, 3005 - 3024		0
Cooling water temperature maximum	1021	*	0
Engine room temperature maximum	1135	*	0
Failure of auxiliary equipment	1129		0
Synchronising failure	1039		0
Supply water temperature maximum	1063		0
Missing engine running conditions	1025		1
Starting failure	1023	*	1
gas pressure MINIMUM Controlled gas system 1	1028	*	1
gas pressure MINIMUM Controlled gas system 2	1030	*	1
Mixture temperature maximum	1040		
oil temperature maximum	1043		1
ADMISSIBLE CONTROL DEVIATION OF LEANOX controller EXCEEDED	1080		1
engine cooling water pump FAILURE	1090		1
Generator frequency too low	1110		1
Actual value measuring signal failure	1113		1
Engine speed measurement signal failure	1120		1
TecJet GAS QUANTITY JUMP	3099		1
ENGINE Oil level MINIMUM	1018		2
GENERATOR reverse power	1038		2
Cylinder exhaust gas temperature Deviation from maximum average value	1044		2
Cylinder exhaust gas temperature Maximum excess over absolute value	1049		2
Cooling water pressure maximum	1050		2
Mixture temperature fluctuation speed maximum	1105		2
Generator exciter failure	1109		2
Neutral current maximum	1112		2
Engine oil level minimum	1018		2
Generator reverse power	1038		2
Cylinder exhaust gas temperature Deviation from maximum average value	1044		2

GE Proprietary Information: CONFIDENTIAL! Use or disclosure of data contained on this sheet is subject to the restrictions on the cover or on the first page.

Failures:	Diane No.:	National restrictions	Risk category
Cylinder exhaust gas temperature Maximum excess over absolute value	1049, 2001 – 2020		2
Cooling water pressure maximum	1050		2
Mixture temperature fluctuation speed maximum	1105		2
Generator exciter failure	1109		2
Neutral current maximum	1112		2
cylinder 1 maximum excess over absolute value	2001		2
cylinder x deviation from average value, Maximum positive deviation	2021 – 2040		2
Cylinder x deviation from average value, Maximum negative deviation	2041 – 2060		2
Gas proportioning valve CAN link failed	3093		2
Oil pressure minimum	1017		3
Missing power signal	1041		3
Oil filter differential pressure maximum	1059		3
Gas mixer control faulty	1083		3
Backfire protection	1128		3
All other risk categories not listed in risk categories 0 – 3.			4

Due to national restrictions, risks listed in category 0 and 1 may be promoted to category 4 risks.

Single or multiple resetting of all other trip-generating failures without remedying the cause first will result in a considerable potential risk of injury or damage. The customer (or the party responsible for the remote resetting) will be entirely liable for such injury or damage.

1.9 Recording operational data, maintenance record sheet

It is mandatory for all operational data to be recorded and all out-of-the-ordinary events to be described.

Please note:

It is not enough merely to record the facts in writing. The data should be compared with the commissioning data and be checked for plausibility. In case of deviations, abnormal noises etc. the cause must be investigated and rectified. If you cannot find the cause, the GE Jenbachercustomer-service department should be notified immediately.

It is in the operator's best interests to maintain and record operational data (maintenance record sheet, operational data journal, data recorded in the "Maintenance file"). Properly maintained operational data journals and data record sheets are important documents, enabling analysis and support in case of failures. Moreover, these documents are also important when deciding on warranty claims.

1.10 Spare parts

Only original GE Jenbacherspare parts (e.g. oil filters!) should be used. Warranty claims in respect of defects and damage will be invalidated by the use of non-original spare parts.

GE Proprietary Information: CONFIDENTIAL! Use or disclosure of data contained on this sheet is subject to the restrictions on the cover or on the first page.

Important: In order to avoid unscheduled downtimes it is strongly recommended that a stock of spare parts be held.

1.11 Lubricating oil

No specific maintenance interval is specified for lubricating oil. It is the operator's responsibility to take all necessary measures to ensure the protection and safe operation of the plant and guarantee the plant's availability.

The oil service life (depending on gas quality, mean pressure, engine type, oil consumption, oil temperature and oil type) can be prolonged by fitting an additional oil tank. If premature wear is claimed, the results of the lubricating oil analysis, subject to the limit levels laid down in Technical Instruction No. 1000-0099B, must be presented in full, even after the warranty period has expired.

1.12 Spark plugs

No specific maintenance interval is specified for spark plugs. It is the operator's responsibility to take all necessary measures to ensure the protection and safe operation of the plant and guarantee the plant's availability. Spark plug service life depends on the boundary conditions of the plant (e. g. type of spark plugs, gas type, mean pressure, gas mixing temperature, ignition system, emission limits).

1.13 Elastomer components

Elastomer components age and become brittle, even when engines are not operational. That is why the service life of these components does not depend solely on the length of time for which the module has been in service, the cooling water temperature and pressure, etc. With a normal running time of 5,000-6,000 operating hours annually and a maximum cooling water temperature of 90°C, all elastomer components are replaced at the normal intervals as described in the maintenance plan. If this number of operating hours is not reached, the elastomer components (e.g. O-rings on cylinder liners, flexible coupling, etc.) should still be replaced as a precautionary measure after a maximum of 5 years.

1.14 Decommissioning the plant

When prolonged scheduled or unscheduled downtimes occur, such as after the heating season in the case of power plants, the engine systems must be prepared (preserve, change old lubricating oil, close off the flue-gas connection, etc.) for their downtime according to their geographical location (climate, proximity to the sea, gas type, etc.)

As conditions can vary enormously, we recommend that you consult a suitable specialist firm concerning the measures to be taken or contract it to carry out the work.

Of course, before recommissioning the plant, you must make sure that it has been restored to its normal operational condition.

1.15 Welding work on the module

Always make sure to attach the negative pole as close as possible to the weld location when carrying out welding work on the module – not on the mass connection (earth cable) though.

GE Proprietary Information: CONFIDENTIAL! Use or disclosure of data contained on this sheet is subject to the restrictions on the cover or on the first page.

1.16 Components coming into contact with exhaust gas

All parts that come into contact with exhaust gas are state-of-the-art materials with a specified service life. Due to the different operating modes and different fuel gas content (including traces of harmful substances), no binding guarantee can be given on the service life of components such as the exhaust manifold, etc. Where silencers are situated in the open air without external heat insulation, condensate (acid, water) can occur even in installations without heat exchangers (hot exhaust gases) and shorten the service life. This also applies to silencers with internal insulation, where the temperature in the rock wool insulation can fall below the dew point.

1.17 Fuels

The service life and safe operation of the plant depend to a considerable extent on the operating materials used. Only use operating materials such as fuel gas, engine cooling water, warm water, anti-freeze agent, anti-corrosive agent, lubricating oil, etc. as specified in the respective GE JenbacherTechnical Instructions.

1.18 Fuel gas quality

The operator is obliged to check the quality of the fuel gas in terms of thermal value, methane number and content of harmful substances at regular intervals. If these values differ from the values stipulated in the contract, immediate measures must be taken by agreement with the GE Jenbachercustomer service department. If the content of harmful substances increases (e.g. sewage gas, landfill gas) the lubricating oil can become heavily acidified within a fraction of the normal oil change interval and acute or irreparable damage and increased wear occur all of a sudden, for example on cylinder liners and bearings and/or oil consumption increases.

If the methane number fluctuates downwards (within the range stipulated in the contract) the engine is protected against harmful knock operation by the control system (automatic ignition point adjustment, power reduction).

Note:

During the commissioning process the engine is adjusted to the optimum setting for the methane number given at that time.

If the methane number increases after commissioning (for a prolonged period or a major part of the plant's operating time) the engine setting should be adjusted so as to optimise operational efficiency. This task must be carried out by specialist staff.

1.19 J624 TSTC turbocharger unit

This pressure equipment is part of the generating set and may only be used in the intended manner. The entire engine and generating set documentation therefore applies in addition to these Instructions and must be taken into account as well.

Use of the pressure equipment is only permissible if the stated limits are observed.

Connection information:

- The operator must arrange for the recurrent tests required by the law of the country of operation.
- The introduction of additional loads (lifting, pushing) is prohibited.

GE Proprietary Information: CONFIDENTIAL! Use or disclosure of data contained on this sheet is subject to the restrictions on the cover or on the first page.

- No welding, heat treatment or metal-cutting machining may be carried out on the cast parts.
- The bolted joints between the cast parts must never be touched in any way, unless instructed in the maintenance instructions.

Since these are open pressure equipment items, static overpressures are not possible. However, to avoid exceeding the design pressures during engine operation, bypass valves and pressure sensors are fitted, which must be fully functional.

Safety cannot be assured in the event of improper use.

GE Proprietary Information: CONFIDENTIAL! Use or disclosure of data contained on this sheet is subject to the restrictions on the cover or on the first page.

1	**Tips**	**1**
2	**Potentially explosive atmospheres**	**1**
3	**EMERGENCY STOP**	**1**
4	**Minimum clearance to be left around the module for maintenance work**	**2**
5	**Gas and smoke alarm installation**	**4**
5.1	Exhaust, breather and air-bleed lines in the fuel-gas system	5
6	**Fuel gas**	**6**
6.1	Condensate removal in the fuel-gas system	7
6.2	Underrunning the minimum methane value	8
7	**Intake air**	**9**
7.1	Engine room	9
7.2	Cooling air generator	11
8	**Engine cooling water circuit**	**11**
9	**Cooling water for the mixture and oil**	**12**
10	**Raw water, warm water, hot water**	**14**
11	**When operating with a steam boiler**	**15**
12	**Lubricating oil**	**15**
13	**Exhaust gas**	**15**
14	**Electrical conditions**	**16**
15	**Operation and maintenance**	**16**
16	**Pipelines (pickling and cleaning)**	**17**
17	**Connections (GE Jenbacher's limits of supply)**	**17**
18	**Refer to the TIs listed below**	**17**

1 Tips

Anlagenspezifische technische Bedingungen: siehe jeweilige techn. Spezifikation.

The limit levels for harmful emissions guaranteed in the technical specification can be met only at a load of between 50% and 100%.

The values in the Technical Instruction applicable to the device must be observed and maintenance must be carried out regularly and expertly.

2 Potentially explosive atmospheres

GE Jenbacher Jenbacher products are generally **not** intended or suited to be used in surroundings in which there is a risk of explosion.

3 EMERGENCY STOP

When installing Jenbacher modules, a manually-operated emergency stop facility (EMERGENCY STOP button) must be fitted on the **customer side** - on the inside and outside of the engine room - **and integrated into the Jenbacher control system.**

When installing Jenbacher container modules, a manually operated emergency stop facility (EMERGENCY STOP button) must be fitted on the customer side - on the outside of the container - and integrated into the Jenbacher control system.

The EMERGENCY STOP buttons must comply with the requirements of ISO 13850 and IEC 60947-5-5.

GE Proprietary Information: CONFIDENTIAL! Use or disclosure of data contained on this sheet is subject to the restrictions on the cover or on the first page.

4 Minimum clearance to be left around the module for maintenance work

The lifting capacity of the crane, minimum travel for the crane and minimum clearance around the module as detailed below must be taken into account in the planning of the engine room. It must be possible to remove the generator from the engine room. When installing equipment in the engine room, you must allow space for the crane to operate and ensure there are freely accessible areas. If necessary, contact GE Jenbacher for advice.

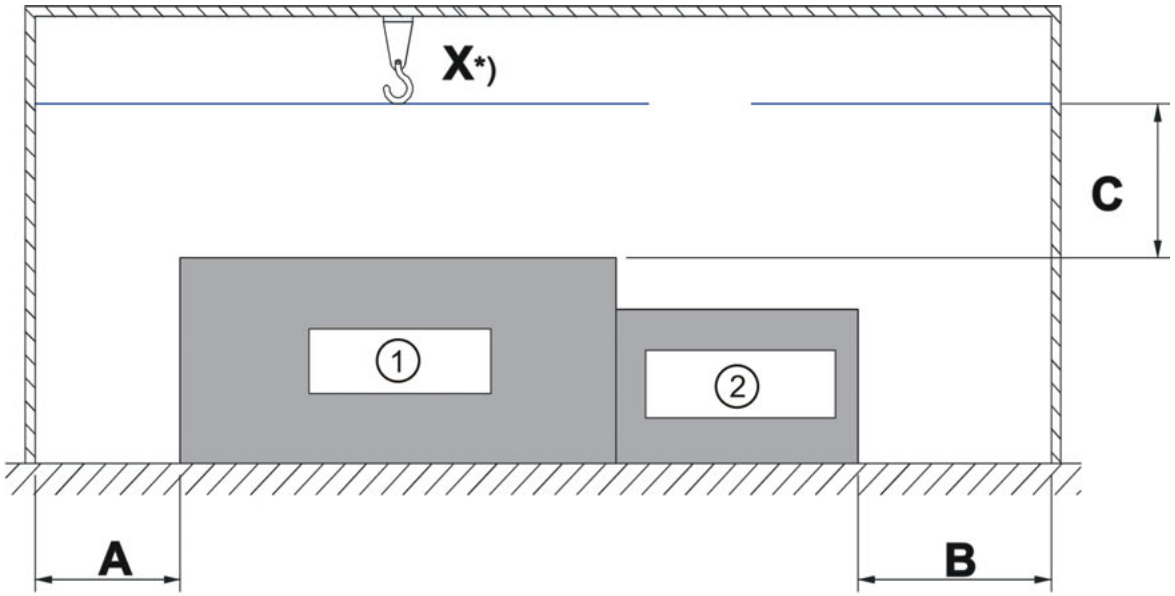

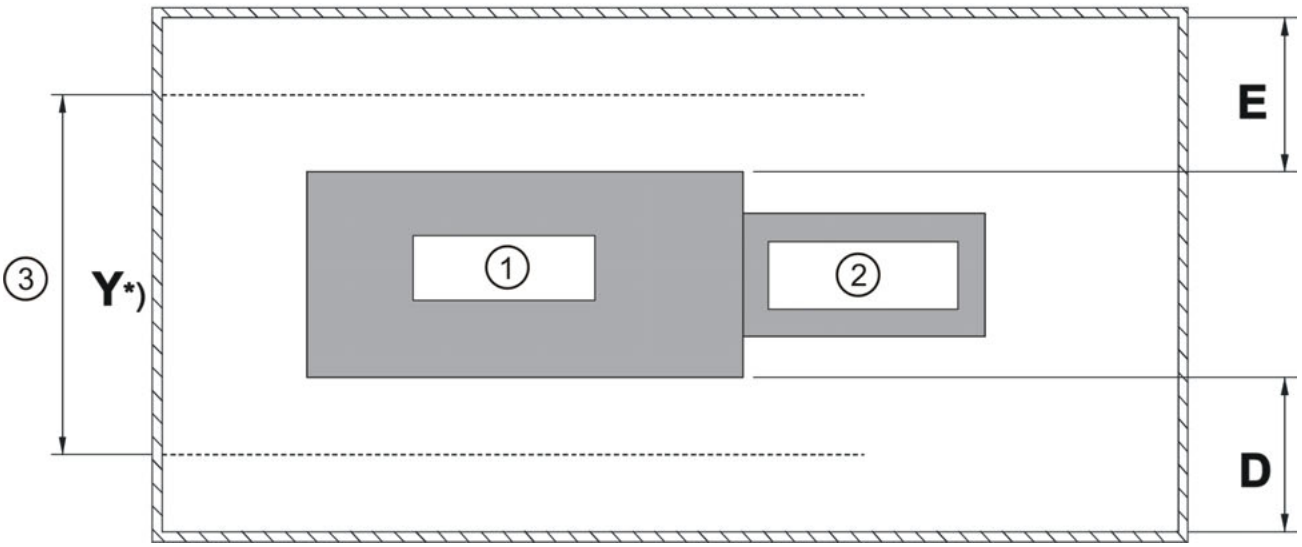

①	Engine	X*)	Crane - max load.
②	Generator	③	Min. travel distance for crane*)

GE Proprietary Information: CONFIDENTIAL! Use or disclosure of data contained on this sheet is subject to the restrictions on the cover or on the first page.

	A*)	B*)	C	D*)	E*)	X*)	Y´*)
J 208	1000 mm	1000 mm	1500 mm	1000 mm	1000 mm	100 kg	-
Engine type 3,4	1000 mm	1000 mm	1500 mm	1000 mm	1000 mm	500 kg	1600 mm
Engine type 6	1500 mm	1000 mm	1500 mm	1000 mm	1000 mm	1000 kg	1600 mm
J 624 TSTC	1500 mm	1000 mm	1500 mm	1000 mm	1000 mm	1000 kg	25000 mm

Y*) type 3, 4 and 6 engines: Crane on 2 overhead rails running above the cylinder heads. The overhead rails must be designed such that heavy machine parts can be moved at least up to the footboards and/or to the rear into the direction of the generator. The dimension specified is the ideal dimension for the rail distance.

X*) The stated weight is the minimum crane load capacity (not including the generator).

J 208: An overhead crane (trolley) with a rails above the cylinder heads would be helpful, but is not necessary.

A, B, D, E*): The dimensions specified are the minimum dimensions. Make sure that not on all sides of the engine only the minimum dimensions are maintained. Enough room must remain on one side to be able to store any disassembled parts during a revision.

It must be possible to position the engine type 6 cylinder heads and/or turbochargers and mixture coolers (for all engine types) which are disassembled at their temporary storage location or on pallets!

Not possible to maintain the minimum clearances?

If the minimum clearances around the module cannot be maintained in the engine room, openings must be provided in the engine room as shown in areas ③ and ④ in the illustration below to permit maintenance work to be carried out on the engine, and removed parts to be brought out.

GE Proprietary Information: CONFIDENTIAL! Use or disclosure of data contained on this sheet is subject to the restrictions on the cover or on the first page.

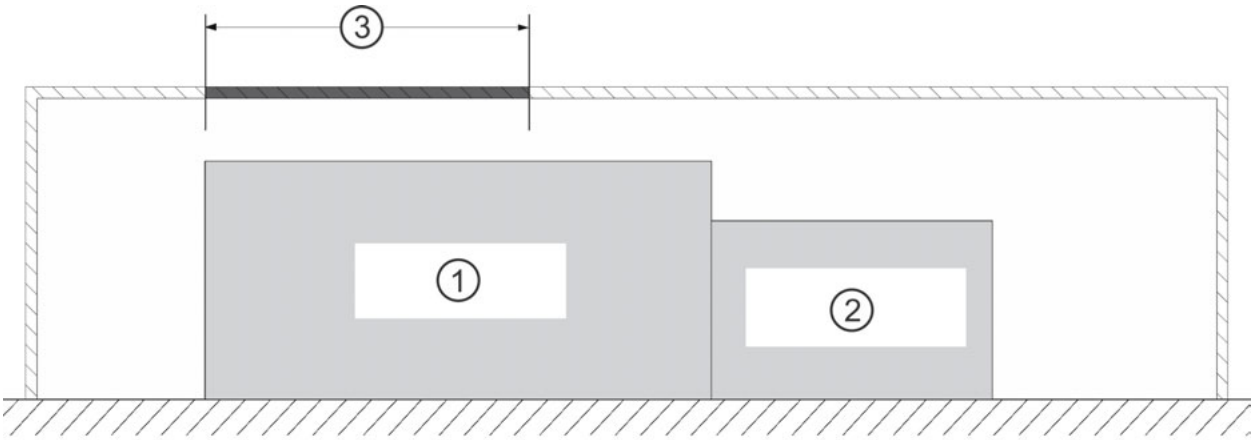

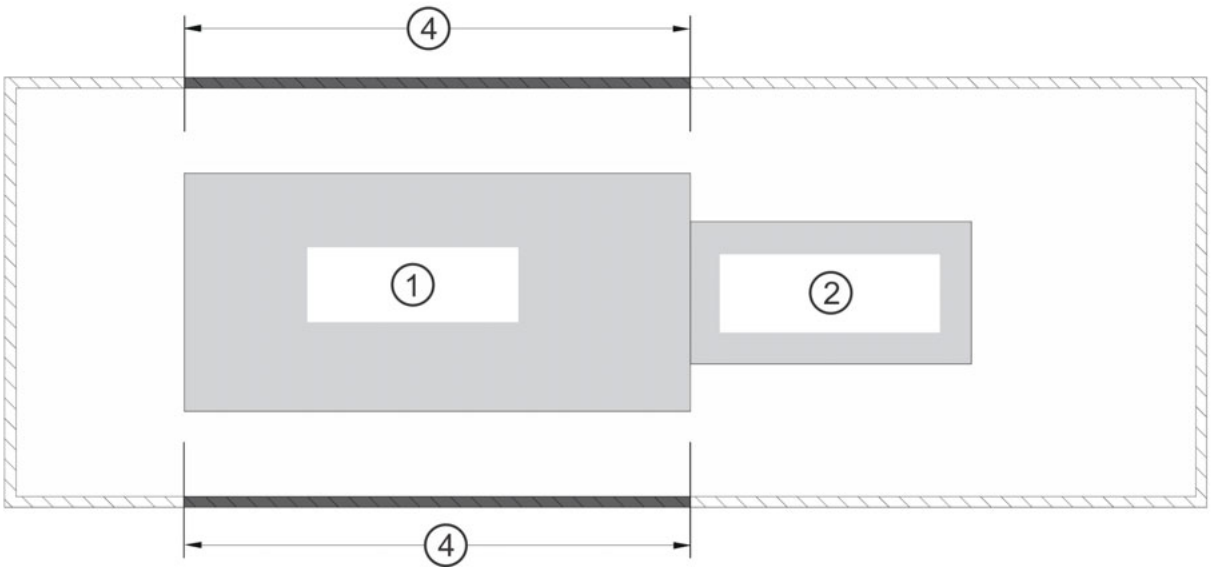

①	Engine
②	Generator
③	Place for an opening for heavy engine parts
④	Place for an opening to the side of the engine

5 Gas and smoke alarm installation

GE Jenbacher requires a gas and smoke alarm with an acoustic alarm (alarm horn) to be installed.

GE Proprietary Information: CONFIDENTIAL! Use or disclosure of data contained on this sheet is subject to the restrictions on the cover or on the first page.

It is the operator's responsibility to install a gas and smoke alarm system in the engine room in accordance with official regulations.

The number of sensors used must satisfy at least the minimum requirements laid down in this TI.

- Natural gas: at least 1 sensor per engine
- Non natural gas: at least 2 sensors per engine
- CO in fuel gas: The number of CO sensors must be specified specifically for each plant (at least 2 sensors per engine)

The sensors must be suitable for the gas components (taking toxicity into account!). Note the results of the gas analyses!

Take into account the following fundamental principles when determining the installation location for the gas-alarm sensors:

- If the engine is run on natural gas, a sensor must be placed above the gas train.
- If the engine is run on a gas other than natural gas (non-natural gas), at least 2 sensors must be installed.
  1 sensor at ground level and 1 sensor above the gas train.
- If the fuel gas contains CO, CO sensors must be installed if:
  - the gas is odourless and the **CO content** of the fuel gas is **> 0%**.
  - the gas contains **odorants** and the **CO content** of the fuel gas is **> 0.5%**.

  CO sensor(s) in areas where people work, especially hazardous areas (next to components containing gas) and CO sensor(s) in areas without air flow (insufficient ventilation).
  The sensors must be installed at breathing height.

5.1 Exhaust, breather and air-bleed lines in the fuel-gas system

Gas can flow out around the outlet area of the pipes!

Breathing lines from the controller, air-bleed lines from the leak tester and exhaust lines should not be routed together and must be terminated outside the engine room to the open air. The diameter of the lines must be selected in accordance with local conditions (because of pressure loss over length, angulations, etc.).

The gas exhaust line is not supplied by GE Jenbacher. The design of a permanently technically leakproof, well-made gas exhaust line (e.g. to TRBS2152/Part 2) is the responsibility of the plant planner/builder.

Gas leaks at the outlet of air-bleed lines must be taken into account.

The outlet area of the lines must be evaluated and designed in accordance with current local regulations (e.g. 94/9/EG, IEC 60079, EN 1127-1).

Example of a high-pressure gas train (inlet gas pressure exceeding 499 mbar):

Details of the exact points at which gas should be exhausted can be found in the plant-specific technical diagram.

GE Proprietary Information: CONFIDENTIAL! Use or disclosure of data contained on this sheet is subject to the restrictions on the cover or on the first page.

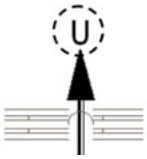

Symbol used in the technical diagram

Terminate exhaust, breather and air-bleed lines outside the engine room!

Gas can flow out around the outlet area of the pipes!

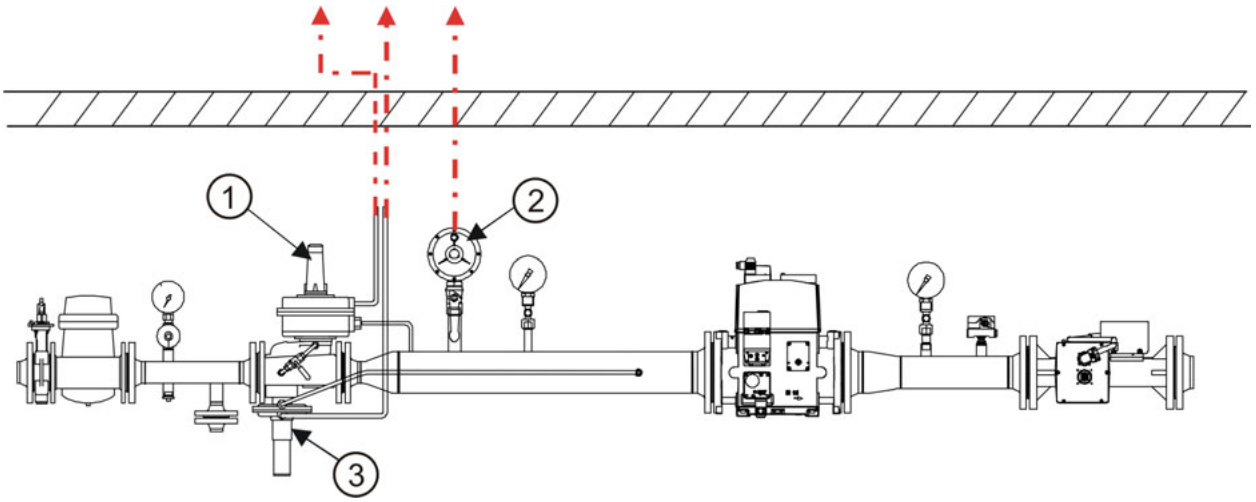

Symbolic drawing of a high-pressure gas train

①	High-pressure controller
②	Safety blow-off valve
③	Safety shut-off valve

6 Fuel gas

Make sure that the fuel gas quality is in accordance with TI 1400-0091 and TI 1000-0300.

The gas train is normally designed for a project-specific pressure. Design precautions must therefore be taken to prevent the gas pressure from exceeding the admissible maximum pressure. In addition, certified safety valves (SOV2) must be installed to prevent excessive pressure at all times.

GE Jenbacher When supplying fuel gas to products, make sure to only use gases that will not ignite under the conditions that prevail outside the engine (mixer connection interface). Where required, you must take additional measures in the plant (e.g. monitoring/controlling the oxygen concentration in the gas -> emergency shutdown), in order to comply with any specific national regulations.

A **manual stop valve** must be provided outside the engine room so that the plant can be shut down for repair and maintenance operations and in emergencies, preferably at the point where the gas pipes enter the engine room.

GE Proprietary Information: CONFIDENTIAL! Use or disclosure of data contained on this sheet is subject to the restrictions on the cover or on the first page.

The manual stop valve must be designed to ensure that no unauthorised person can actuate it, i.e. open it when in locked position.

If there is CO in the fuel gas: if the CO content of the fuel gas is **>5%**, a **nitrogen flushing system** must be installed.

It is the operator's responsibility to ensure that the fuel gas system is equipped with the necessary devices, does not leak and satisfies official requirements.

6.1 Condensate removal in the fuel-gas system

Cooling of gases in the fuel-gas system can cause the water in the gases to condense. The condensate must be drained from the gas system and disposed of taking account of its composition and local regulations (e.g. surface-water protection regulations, explosion protection).

Condensate discharge, drainage and disposal is not part of the GE Jenbacher cope of supply. The design and construction of a gas-tight proper condensate drain line is the responsibility of the plant designer/builder and must comply with all local regulations regarding explosion protection and industrial safety.

Notes on condensate drain lines:

- Not all commercially-available condensate drain lines are gas-tight, and some line can leak in the course of operation. The suitability for use as a gas-tight condensate drain line for fuel gases and the conditions for securing permanent gas-tightness must be expressly confirmed by the manufacturer/supplier.
- Gases dissolved in the condensate can come out of solution in the condensate drain line (pressure drop), which can lead to the formation of an explosive atmosphere in the condensate drain line.

  The condensate drain line should therefore be fitted with a vent to atmosphere.

  Depending on the maximum gas quantity released, the interior of the condensate drain line and the area around the venting point must be evaluated and designed in accordance with current local industerial safety regulations (e.g. the DIN 1127 standard).

  The adjacent illustration shows the layout in principle, with a vent point to atmosphere and a possible gas outlet location.
- The danger of frost in the condensate drain line to atmosphere should always be taken into account.
- The design of the condensate drain line must be approved by the site safety officer and taken into account when drawing up the plant safety plan.

GE Proprietary Information: CONFIDENTIAL! Use or disclosure of data contained on this sheet is subject to the restrictions on the cover or on the first page.

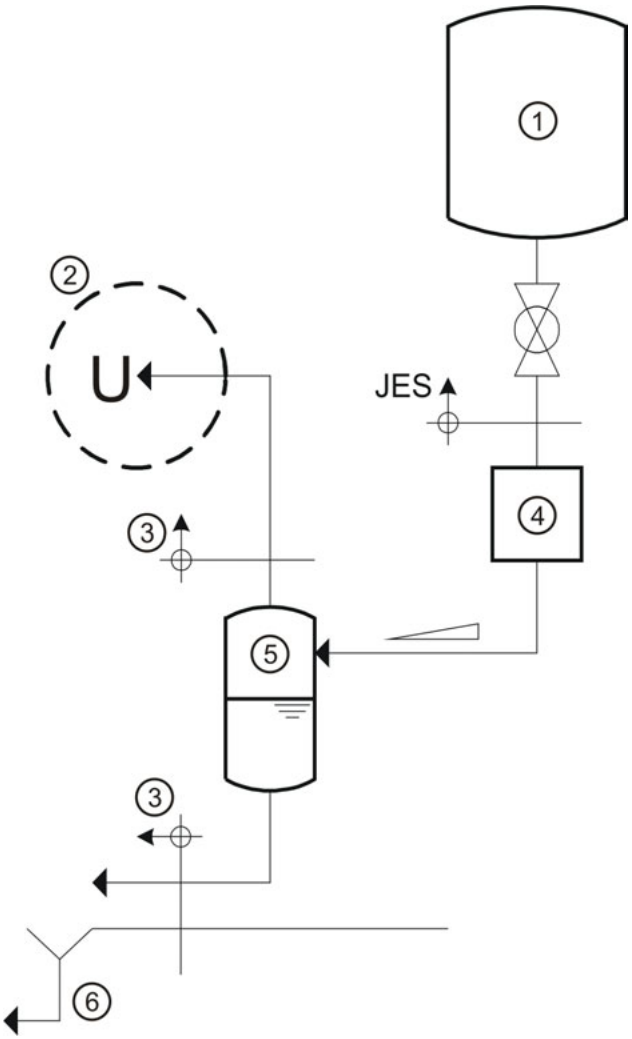

Fuel gas system condensate drain system

①	Fuel gas + condensate	④	Gas-tight condensate discharge
②	Possible gas escape area	⑤	Water trap
③	Environment	⑦	Condensate disposal

6.2 Underrunning the minimum methane value

If the contractually agreed minimum methane value (see technical specification) is not reached, the engine control will automatically take the following steps to achieve knock-free operation and/or to prevent knock damage:

1. reduce the mixture temperature (if a controller has been installed and the ambient conditions so allow);
2. set the ignition point to a later time, but still within the permissible range (followed by a decrease in the degree of efficiency);
3. reduce the engine output to 50%.
4. If these anti-knock measures prove to be insufficient, the knock-control system will shut down the engine.

GE Proprietary Information: CONFIDENTIAL! Use or disclosure of data contained on this sheet is subject to the restrictions on the cover or on the first page.

7 Intake air

7.1 Engine room

Use forced-draught fans for engine-room ventilation.

To prevent false starts and deflagrations when starting (the engine-side air/gas mixer functions just like a carburettor and is very sensitive to temperature fluctuations and pressure differences), the engine-room ventilation system must also be activated when requested by the module via the output contact "Auxiliary Equipment ON". In this way, a controlled set of boundary conditions is created when starting and accelerating. That is why you must not switch off the engine-room ventilation system until approx. 5 minutes after synchronisation when the preset engine-room temperature is reached (engine-room thermostat), nor should you switch from the mains to the generator within this period.

This means that during the starting and accelerating procedure (including synchronisation), no switching of the engine-room ventilation system should occur until conditions have stabilised.

Intake (of combustion air) from the engine room:

When taking in combustion air from the engine room, the engine room cladding should be free from dust and fibres.

The required filter mesh rate should be strictly adhered to.

If refrigeration compressors are installed in the engine room, the intake air should be drawn in from the outside atmosphere.

Intake air:

Dust-free air of purity class G3 to EN 779 and/or a filter degree of 85% to ASHRAE standards.

If required, install a coarse-dust filter of the relevant filter class!

Max. engine-room temperature:

40°C (to be reached at a maximum outside temperature of 35°C).

If higher engine-room temperatures are expected, have GE Jenbacher supply a special module version!

Maximum air intake temperature (at the engine air filter):

Take appropriate measures to keep the combustion air temperature down (+10°C to +25°C). The temperature should remain as constant as possible and vary only within the smallest possible bandwidth.

Measures this purpose: e.g. separate air guide systems up to the air-filter intake, circulation-air control facilities at the engine-room air intake, speed-controlled fans to keep the temperature constant, etc.

Warning:

As for the air pressure, air intake temperature and atmospheric humidity, the limit levels specified in ISO 3046 apply: i.e. 1,000 mbar, +25°C, 30% humidity. If local conditions differ, the specific engine performance will be reduced.

This corresponds to the standard boundary conditions as applied by all engine manufacturers.

GE Proprietary Information: CONFIDENTIAL! Use or disclosure of data contained on this sheet is subject to the restrictions on the cover or on the first page.

However, other conditions may have been agreed upon before the order was placed! For example, full load at an intake temperature of 40°C. In this case, the booster system would have to be modified and the technical data corrected. Such arrangements should be stated in writing in the specification.

Min. air intake temperature and/or engine room temperature:

The starting behaviour of the engine and the power of the starter motor and the starter batteries are designed for a minimum ambient temperature of +10°C.

To prevent starting problems, every engine is fitted with an electric cooling water preheating system. During operation of the electric cooling-water pre-heating system, the intake and exhaust sound dampers, doors, gates etc. must be closed and the fans must be switched off.

Engine-room air:

Maximum sulphur concentrations in the engine-room air < 1.5 mg/m³.

Engine room ventilation:

The engine-room ventilation must be designed so as to:

- make sure that the entire engine room is properly ventilated (to prevent an undesirable accumulation of gases),
- guarantee a directed airflow across the engine to make sure that the surface temperatures of the electrical components installed on top of the engine (ignition coils, ignition cables, knock-control and charge-pressure sensors, throttle-valve actuator, etc.) do not exceed a temperature of +70°C!
  If this is not guaranteed and the surface temperatures exceed this temperature, the service life of these components will be considerably reduced and the failure frequency may increase sharply. Any resulting damage and downtime are not covered by the warranty.
- guarantee that outside air is forced into the engine room by the frequency-controlled fans and the engine room is slightly overpressurised.

Engine-room overpressure: > 0.1 mbar, < 0.5 mbar.

If the engine is at standstill - especially if multiple-engine systems are in use - this overpressure causes a defined ventilation flow through the engine towards the exhaust stack.

In the event of a false start (which can never be fully prevented), this will prevent the unburned mixture from flowing back to the engine.

To ensure that the very cold outside air flow (<10°C) is thoroughly mixed with the hotter engine-room air (circulation-air control), never guide the fresh intake air flow directly to the air-filter intake.

GE Proprietary Information: CONFIDENTIAL! Use or disclosure of data contained on this sheet is subject to the restrictions on the cover or on the first page.

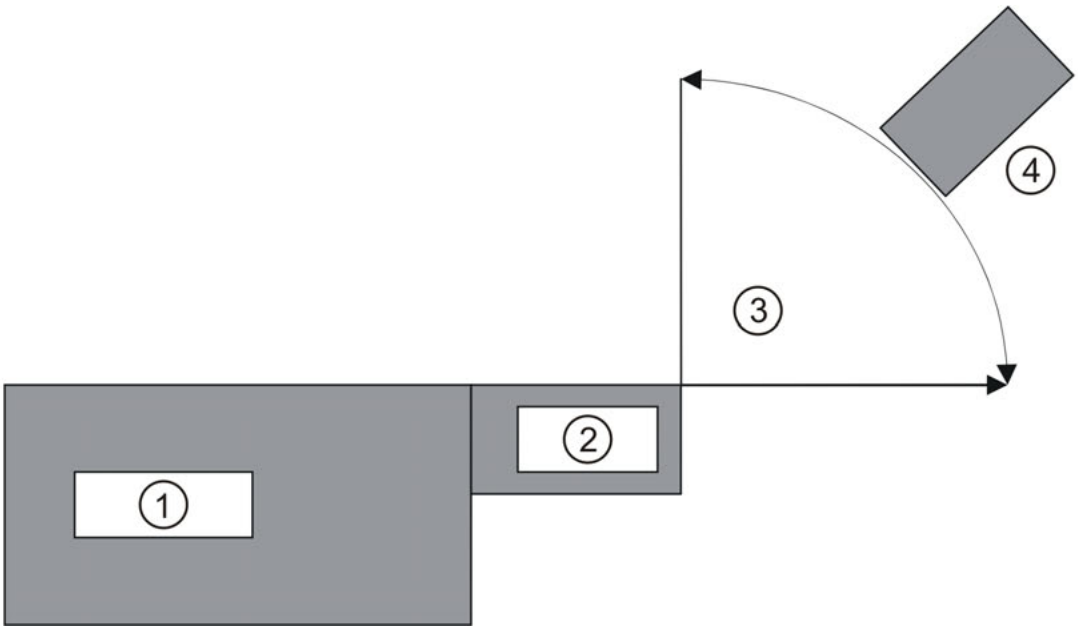

Positioning the fresh air flow for the air filter intake

①	Engine	③	R = 3 - 4 m 90° if possible
②	Filter	④	Fan

This is to guarantee that even when outside temperatures are as low as e.g. –10°C, the air temperature at the air-filter intake will not fall below +10°C. Extreme temperature fluctuations will cause control problems, e.g. 'pumping" of the turbocharger.

Also make sure that the fresh intake air flow is not directed straight at the air-filter intake, as the dynamic effect of the air flow will affect the mixture composition and can cause false starts and deflagrations!

7.2 Cooling air generator

Air intake temperature max. 40°C

Relative atmospheric humidity max. 80%

Dust content ≤ 1 mg/m³

SO2 content ≤ 1.5 mg/m³

The Pt100 temperature-control sensor must be positioned in the engine room at the following location:

engine room side, before the centre of the exhaust sound damper.

8 Engine cooling water circuit

Must comply with TI 1000-0200.

Anti-freeze agent as specified in TI 1000-0201.

GE Proprietary Information: CONFIDENTIAL! Use or disclosure of data contained on this sheet is subject to the restrictions on the cover or on the first page.

Anti-corrosion agent as described in TI 1000-0204.

Maximum permissible cooling water outlet temperature at the engine: refer to technical specification and/or technical diagram.

Max. operating pressure at the crankcase inlet

- **Type 2, 3, 4 and 6E engines (average pressure 20 bar)** 2.5 bar
- **Type 6F engine (average pressure 22 bar), J624G, J624H** 3.5 bar
- **Type 6F101 -112 engine (hot-country version) in generating set version** 5.5 bar

In the case of multi-engine systems: make sure that the various engine cooling water circuits are separated.

The standard engine cooling water heat exchangers must be designed on the cooling circuit side for a maximum water pressure of 10 bar. If higher pressures are required (e.g. 16 bar), suitable heat exchangers for the required pressures must be provided.

9 Cooling water for the mixture and oil

Dirt collector (mesh size ≤ 0.1): refer to technical diagram.

See Section [⇨ TA 1100-0110, Page 11] and Section [⇨ TA 1100-0110, Page 14] for the water quality.

Maximum intake temperature: refer to the technical diagram and/or the relevant technical specification

(see Section [⇨ TA 1100-0110, Page 14] for the permissible temperature change).

Maximum permissible gauge pressure 16 bar. When integrating the cooler in the cooling circuit, make sure that the engine cooling water heat exchanger is designed for a permissible pressure of 10 bar as standard. (see section [⇨ TA 1100-0110, Page 14])

Minimum water volume flow and water pressure in the high-temperature circuit (HT) of type 6 engines:

The HT stage of type 6 engine intercooler is subject to the relation between minimum pressure and water flow as shown in Diagram 1 (boundary conditions: average pressure 22 bar, cooling water inlet temperature at first cooler stage 70-80°C*). Keeping to the minimum values will prevent steam bubble formation at the highest expected tube wall temperature in the cooler.

GE Proprietary Information: CONFIDENTIAL! Use or disclosure of data contained on this sheet is subject to the restrictions on the cover or on the first page.

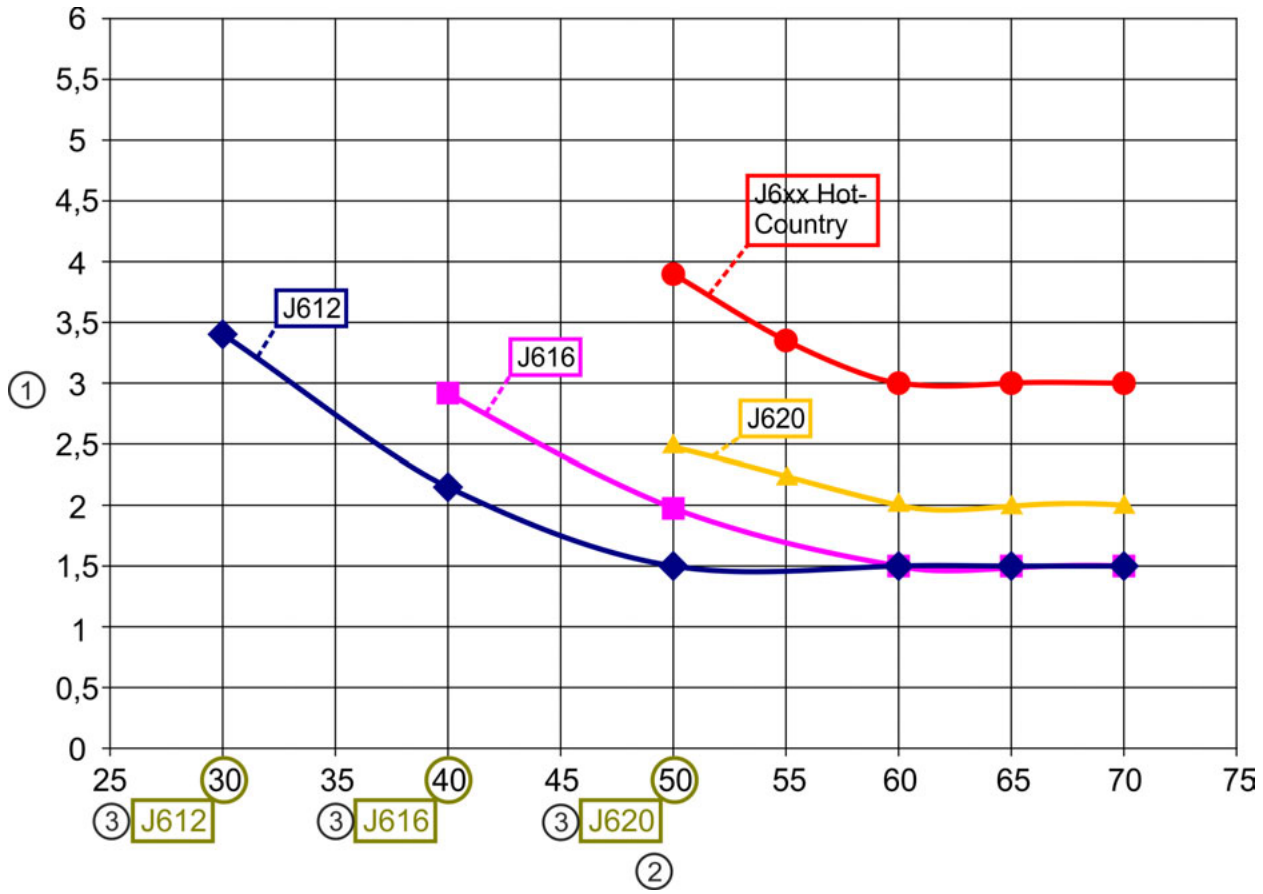

Diagram 1: Water volume flow and minimum pressure to prevent steam bubbles from developing in the type 6 engine mixture cooler's HT stage at an average pressure of 22 bar and a cooling-water temperature of 70-80°C.

①	Minimum water pressure at the outlet from the intercooler HT stage [bar gauge]	③	Minimum water volumetric flow at the intercooler HT stage [m^3/h]
②	Water volumetric flow through the intercooler HT stage [m^3/h]		

*at higher warm water inlet temperatures, the water pressure must be designed as 1.0 bar / 10K higher

Additional design guidelines for the HT cooling circuit:

The minimum volume flow ③ for the number of cylinders of the engine must be guaranteed in order for the cooler to reach its cooling performance.

MODUL (intercooler and engine housing separate).

GE Proprietary Information: CONFIDENTIAL! Use or disclosure of data contained on this sheet is subject to the restrictions on the cover or on the first page.

- Irrespective of the integration variant of the intercooler (parallel, serial, etc.), the water flow and pressure values at the HT stage outlet must at least comply with the limit values from diagram 1.
- The volumetric flow must not drop below the minimum in any operating mode. For example, if a constant warm water circuit inlet temperature is required (greenhouse application), as a general rule water recirculation is to be preferred to pump speed control.

GENERATING SET (intercooler and engine block in the same water circuit)

- The water flow and pressure at the outlet from the intercooler HT stage must meet the limit values in diagram 1 as a minimum.
- The pressure at the crankcase cooling water inlet must not exceed 5.5 bar.
- The static system pressure at the expansion tank must be selected so that the both the stated requirements are met under operating conditions (warm water circuit).

Water volume flow and minimum pressure in the low-temperature circuit (LT) of type 6 engines:

The following minimum flow values must be maintained in the LT circuit, since otherwise the temperature gradient across the cooler surface might be worse and reduce the cooling effect of the LT stage.

- J624: 50 m^3/h
- J620: 40 m^3/h
- J616: 30 m^3/h
- J612: 25 m^3/h

Minimum fill pressure in hot water circuits in plants using exhaust gas heat:

When an exhaust gas heat exchanger is fitted, the minimum-pressure requirements for the heating circuit must be as stated in TI 1000-0206.

Whichever value is higher from diagram 1 or TI No. 1000-0206 must be selected!

Demand by circulation pump – pump after-run:

In general, the circulation pump's demand for the warm water circuit (high temperature circuit) and other separate circuits is controlled by GE Jenbacher.

Customers must ensure at least 5 minutes' after-run, especially for plants with exhaust gas heat recovery where the pumps are not controlled by GE Jenbacher.

Because of the arrangement of valves in the exhaust gas system, the exhaust gas heat exchanger must also be flushed with coolant when in bypass operation.

10 Raw water, warm water, hot water

Dirt collector (mesh size ≤ 0.1): refer to technical diagram.

Water quality: must comply with TI 1000-0206.

The specified warm-water return temperature should not be exceeded (install emergency cooling, otherwise the module will be shut down).

GE Proprietary Information: CONFIDENTIAL! Use or disclosure of data contained on this sheet is subject to the restrictions on the cover or on the first page.

Permissible return-temperature change:	70°C +3/-20°C
	50°C +3/-10°C

Intermediate values should be determined by interpolation.

Permissible return-temperature change speeds: maximum 10°C per minute.

We advise you to install a thermostatic control to achieve a constant return temperature at the module intake.

In that case, the control must be integrated into the heating system and the operating conditions in accordance with GE Jenbacher Drawing No. E 9684 and/or in consultation with GE Jenbacher.

11 When operating with a steam boiler

Water quality must be in accordance with boiler manufacturer's specifications.

Refer to the technical specifications and technical diagram for the maximum permissible temperature and pressures.

12 Lubricating oil

Must comply with TI 1000-1109.

Oil changes should be carried out in accordance with TI 1000-0099 A/B/C/D or in accordance with the results of the oil analyses.

Warning:

The oil lines to the engine, fixtures, vessels, etc. should not be made from pure copper. Copper has a strong oxidising effect on lubricating oil, especially at increased temperatures (accelerates ageing), which will result in an increased Cu content in the oil, giving rise to incorrect diagnoses.

Similar Cu-Ni alloys (Ni content ≥ 10%) do not have these characteristics and can therefore, if so desired, be used instead of normal steel tubes.

13 Exhaust gas

Engine malfunctions can cause backfiring in the exhaust gas system. The exhaust gas system as a whole must therefore be capable of absorbing short-term pressure surges of up to 6 bar. The underpressure following a pressure surge can be in the order of approx. 200 mbar. This must be taken into account in the engineering of the exhaust gas system. The internal pipe must be resistant to buckling, especially when long double-wall funnels are used (DIN 4133).

See the technical specification and/or technical diagram for maximum permissible exhaust gas backpressure.

In the case of multi-engine systems, exhaust gas systems must not be combined.

Exception:

- double shut-off valves with intermediate ventilation for each module
- if a continuous underpressure exists at the point where the systems are combined (e.g. a continuous flow in the smoke stack).

The condensate from the heat-recovery boilers, silencers and the exhaust manifold, etc. should be collected and disposed of in an environmentally sound way.

Condensate lines should not be interconnected.

GE Proprietary Information: CONFIDENTIAL! Use or disclosure of data contained on this sheet is subject to the restrictions on the cover or on the first page.

14 Electrical conditions

Nominal mains voltage change:	+/-10%*) of nominal voltage
Max. permissible transient mains voltage changes:	+/19% of nominal voltage*)
Nominal mains frequency deviation:	max. +/- 2%
Minimum duration of a short interruption:	min. 200 ms
Make time of the synchronising switch:	70 ms
Break time of the circuit-breaking switch:	60 ms

*) Note: The ranges relate to default voltages in accordance with IEC 60038/ EN 50160. In the case of countries with 415/240V, a maximum voltage tolerance of +6% applies because the related default voltage is 400/230V +/-10%.

Apart from the normal connecting and disconnecting coils, the generator switch must also be fitted with a DC low-voltage disconnecting coil. This coils disconnects the generator from the mains in the case of loss of control voltage or wire breakage.

To prevent external overvoltages from reaching the installation, overvoltage deflectors should be installed onsite at the mains supply voltage location. To protect the generator, overvoltage deflectors must be fitted onsite on the generator, if required, in combination with capacitors.

To mains supply locations with nominal voltages ≤ 1000V applies: The Up protective peak must be selected in accordance with the measurement surge voltage for IEC 60364-4-44 overvoltage category II, Table 44.B.

For example, the protective Up peak must not exceed 2.5 kV for 230/400V installations.

To mains supply locations with nominal voltages > 1000V applies: Select and apply overvoltage deflectors in accordance with EN / IEC 60099-5.

See TI No. 1100 -0112 for the overvoltage deflectors on the generator.

15 Operation and maintenance

Minimum operation time: 12 hours per engine start, except when commissioning, carrying out maintenance work and during emergency power operation.

This minimum operating time is **not** an essential condition, but a reference value for the maintenance intervals specified in the maintenance documentation. This reference value should help the operator to decide when, contrary to what has been stated in the maintenance manual, various wearing parts will have to be replaced (if, for example, a starter motor is used three times more frequently than expected, it will also have to be overhauled sooner).

The maintenance intervals as stated in the maintenance manual are **averages for normal operation based on experience**!

Preventive inspections of components can help the operator to determine the exact point in time when the wearing parts need to be replaced (see also TI 1100-0111).

Failure to adhere to the minimum operating time can have a serious effect on the service life of various parts.

Idling mode

Idling duration limited through the module control unit (except for maintenance and initial setting work: keep idling period as short as possible).

GE Proprietary Information: CONFIDENTIAL! Use or disclosure of data contained on this sheet is subject to the restrictions on the cover or on the first page.

Partial load operation

Partial load operation without limitations up to > 40% of the nominal load for type 2, type 3 and type 4 engines and/or > 40% at pme = 18 bar for type 6 engines. Emission values referred to in the technical specifications only apply where a load exceeds 50%.

Continuous operation

You must always aim for full load operation. Partial load operation without limitations up to > 40% of the nominal load for type 2, type 3 and type 4 engines and/or > 40% at pme = 18 bar for type 6 engines. Emission values referred to in the technical specifications only apply where a load exceeds 50%.

isolated operation

During isolated operation, the module may be operated 6 times per year for 4 out of 24 hours at > 20% and < 40% of the rated module load.

Daily inspection

Maintain an engine log.

Maintenance as per GE Jenbacher maintenance plan.

All conditions as described in the TIs should be complied with.

For oil changes, oil analyses and oil quality assessments, refer to TI 1000-0099 A/B/C/D.

16 Pipelines (pickling and cleaning)

The inside of all piping, especially welded piping, must be cleaned before assembly;

e.g. gas lines, oil lines, cooling water lines, control lines, etc.

Note: pickling should only be carried out by companies that have sufficient experience in carrying out galvanizing work!

17 Connections (GE Jenbacher's limits of supply)

Connections (at GE Jenbacher limits of supply) should be equipped with compensators and/or flexible hoses.

The plant piping should be arranged in such a way that the compensators at GE Jenbacher limits of supply are not subjected to mechanical force.

18 Refer to the TIs listed below

The revision applicable when the contract was signed is valid:

General conditions

TI 1100-0111	General conditions - Operation and maintenance
TI no. 1100-0112	TI no. 1100-0112 Installation of GE Jenbacher modules

GE Proprietary Information: CONFIDENTIAL! Use or disclosure of data contained on this sheet is subject to the restrictions on the cover or on the first page.

Warning signs

TI 1000-0330	Signage on the engine room door

Fuel gas

TI 1000-0300	Fuel gas quality - natural, associated petroleum, bio- and landfill gas
TI 1000-0301	Fuel gas quality: mine gas
TI 1000-0302	Fuel-gas quality - special gases
TI 1400-0091	Fuel gases, freedom from condensate

Lubricating oil

TI 1000-0099A	General instructions for lubricating oils
TI 1000-0099B	Limit levels for used oil on GE Jenbacher engines
TI 1000-0099C	Procedure for testing plant-specific oil service life
TI 1000-0099D	Determining the initial Ph value (iPh) for waste lube oil as defined in TI 1000-0099B
TI 1000-1109	Lub. oil for GE Jenbacher engine types 2, 3, 4 and 6

Cooling Water

TI 1000-0200	Quality of cooling water in closed circuits
TI 1000-0201	Anti-freeze agent
TI 1000-0204	Cooling water anti-corrosion additive
TI 1000-0206	Quality of circuit water in hot water and warm water heating systems
TI 1000-0208	Quality of cooling water in open circuits

Cabling

TI 1000-0505	Electromagnetically compatible (EMC) cabling and earth connections on and between engine modules and control cabinets

GE Proprietary Information: CONFIDENTIAL! Use or disclosure of data contained on this sheet is subject to the restrictions on the cover or on the first page.

1	**General**	**1**
2	**Safety signs – hazard classification system**	**2**
3	**Health and safety during operation and maintenance**	**3**
4	**What to do in the event of an alarm**	**4**
4.1	Evacuation alarm (gas alarm, fire alarm, CO alarm, gas pre-alarm)	4
4.2	CO pre-alarm	5
5	**Personal protection**	**6**
6	**Transporting - lifting - installing**	**8**
7	**Shutdown procedure and making safe**	**9**
8	**Engine room**	**12**
9	**Components**	**17**
9.1	Exhaust system	17
9.2	Turbocharger	18
9.3	Fuel gas system	19
9.4	Cooling system	21
9.5	heat exchanger	22
9.6	Safety valve	24
9.7	Lubrication system	24
9.8	Control system	26
9.9	Ignition system	26
9.10	Cables and insulated wiring	27
9.11	Throttle valve	27
9.12	Electrical connections	28
9.13	Generator	28
9.14	Electrical cabinets	29
9.15	Acoustic insulation (container; sound absorber hood)	31
9.16	Battery	31
9.17	Container/enclosure	32
10	**Maintenance and servicing**	**34**
11	**Cleaning**	**36**
12	**Disposal requirements for waste electrical and electronic equipment**	**37**

1 General

The operating and maintenance instructions contain basic safety signs, requirements and directions which must be observed during the delivery, setting-up, commissioning, operation and maintenance of GE Jenbacher machinery. These documents must be read and understood by the user before starting the machinery. The most recent edition of the operating instructions must always be available at the machine.

GE Proprietary Information: CONFIDENTIAL! Use or disclosure of data contained on this sheet is subject to the restrictions on the cover or on the first page.

The information contained in the safety instructions below is intended to provide you with an overview of danger zones and possible causes of accidents.

While the instructions below are intended for your safety, they cannot cover in detail the scope of all accident risks posed by industrial machinery.

When operating this machinery it is your duty to comply with all current official and quasi-official safety rules and codes applicable to your sector. You should also use your own powers of judgement to avoid hazards and dangerous situations.

Most accidents are caused when people disregard simple, basic safety rules.

Any manipulation of the machine or its control cabinets which causes the machinery to operate outside its specified operating range (control range), is prohibited and could result in serious indirect damage.

Any modifications of the item supplied, including changes to the program and software, which are carried out by the customer or third parties without GE Jenbacher prior consent will result in the lapse of any right to damages or the exercise of a warranty claim against GE Jenbacher.

2 Safety signs – hazard classification system

The pictograms with hazard classification used in this document are also used on GE Jenbacher **products. They refer to each of the hazards as described in this document.**

DANGER (ISO DIS 3864-2)

denotes a high-risk hazard. If this hazard sign is ignored, death or severe injury will follow as a direct consequence.

WARNING (ISO DIS 3864-2)

denotes a medium-risk hazard. If this hazard sign is ignored, death or severe injury may result.

GE Proprietary Information: CONFIDENTIAL! Use or disclosure of data contained on this sheet is subject to the restrictions on the cover or on the first page.

CAUTION (ISO DIS 3864-2)

denotes a low-risk hazard. If this hazard sign is ignored, minor or moderate injury may result.

NOTICE (similar to ANSI Z535.2)

denotes information directly or indirectly relating to the safety of employees or measures to protect the machinery. If this hazard sign is ignored, breakdowns or material damage may result.

3 Health and safety during operation and maintenance

The customer will take all necessary precautions to ensure the safety of the contractor's personnel at the site. This includes provisions for review by the contractor of and safety instruction by the customer on the customer's safety practices, proper safe handling and disposal of hazardous substances and the protection of the contractor's personnel from exposure to such substances, activation and deactivation of all power systems (electrical, mechanical and hydraulic) using a safe and effective lock-out tag procedure, and conducting periodic safety meetings.

The contractor will comply with reasonable health and safety requirements imposed from time to time by the customer at the facility.

The contractor may conduct occasional safety audits to ensure that safe conditions exist and make recommendations to the customer concerning such conditions. Neither the performance or non-performance of safety audits nor the making of any recommendation by the contractor will relieve the customer of the responsibility to provide a safe place to work. If the contractor's staff require medical attention, the customer's local facilities will be made available to the contractor's staff for as long as necessary.

If, in the contractor's opinion, the safe performance of work at the site is or may be endangered by local conditions, the contractor may remove some or all of its staff from the site and/or supervise performance of all or any part of its work and/or evacuate its staff. The customer will assist with any such evacuation.

The operation of equipment at the site will be the responsibility of the customer. If the customer requires or permits the contractor's staff to operate equipment at the site, the customer will indemnify the contractor, its employees and agents for all costs and liability (including any reasonable attorney's fees) incurred by or imposed upon the contractor, its employees and agents, based upon injury to persons (including death) or damage to property resulting from the operation of equipment at the site by the contractor's staff.

GE Proprietary Information: CONFIDENTIAL! Use or disclosure of data contained on this sheet is subject to the restrictions on the cover or on the first page.

If the customer provides the contractor's staff with any tools and equipment to perform work at the site, these tools and equipment must be in a safe working condition (i.e. subject to inspections and preventive maintenance).

If the contractor encounters any hazardous material at the site which requires special handling and/or disposal, the customer will immediately take whatever precautions are required to legally eliminate such hazardous conditions so that the work under contract may proceed safely. The customer must ensure that all hazardous materials produced or generated in the course of the contractor's work at the site are removed.

All decontamination necessary for the contractor's work (including any repair work) will be performed by the customer.

4 What to do in the event of an alarm

4.1 Evacuation alarm (gas alarm, fire alarm, CO alarm, gas pre-alarm)

Evacuation alarm as specified in ISO 8201/minimum duration 180 seconds.

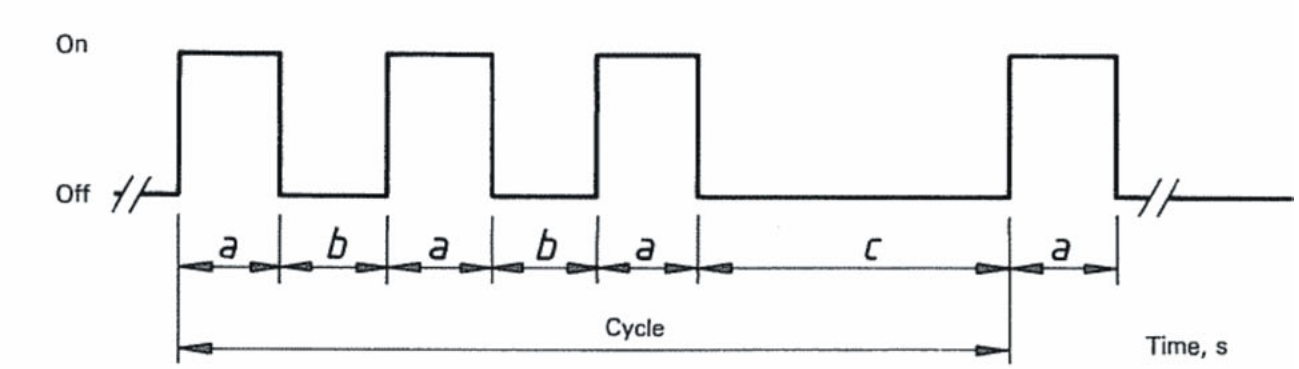

a	Phase *a* signal is "On" for 0.5 s ± 10%
b	Phase *b* signal is "Off" for 0.5 s ± 10%
c	Phase *c* signal is "Off" for 1.5 s ± 10% (c = a + 2b)
Cycle	Length of cycle: 4 s ± 10%

- **Leave the affected area immediately. Go out into the fresh air, outdoors, right away.**
- **Close the gas safety shut-off valve outside the engine room and outside the danger zone and make sure that it cannot be opened unintentionally.**
- **Call the fire brigade.**
- **Do not re-enter the affected area.**
- **Wait for the fire brigade to arrive.**

GE Proprietary Information: CONFIDENTIAL! Use or disclosure of data contained on this sheet is subject to the restrictions on the cover or on the first page.

- **Warn other people about the danger.**
- **Do not re-enter the affected area until the danger has been eliminated with the professional assistance of the fire brigade, the fault or damage professionally rectified, all enclosed spaces thoroughly ventilated and the area has been declared safe to re-enter.**

Bear in mind that ambient and operating conditions differ from plant to plant and the **general rule is that, before work starts in plants using poisonous gases**, the operator of the plant should draw up an **EMERGENCY PLAN** which takes these specific conditions into account. The relevant statutory regulations must also be taken into account. This emergency plan must be brought to the attention of all persons employed at the plant, evidence of which must be available.

An emergency plan will generally consist of at least the following information:

- Emergency regulations (what to do, evacuation, escape routes, assembly point, etc.)
- Local emergency telephone numbers (rescue, emergency doctor, fire brigade)
- People to be notified in the event of an emergency
- Location of breathing apparatus independent of ambient air
- Other necessary safety information as laid down in statutory regulations, etc.

4.2 CO pre-alarm

Close the gas safety shut-off valve outside the engine room and make sure that it cannot be opened unintentionally. Leave the engine to run until it stops of its own accord due to lack of gas. The ventilation is set to maximum by the engine control system. Call in professionals to look for the gas leak and initiate damage repair.

GE Proprietary Information: CONFIDENTIAL! Use or disclosure of data contained on this sheet is subject to the restrictions on the cover or on the first page.

5 Personal protection

TI 2300-0001 – Employee protection

The operation of the machinery or work on the machinery may only be carried out by specialist staff who have received relevant electrical and mechanical training.

Access to the engine room is restricted to persons (specialist staff) who have read, understood and will observe the safety instructions.

Prohibition, hazard, mandatory and warning signs must be obeyed at all times. Any failure to do so may result in injury and death or damage to the machinery.

Wear personal protective equipment (PPE)!

Wear the personal protective equipment approved by the health and safety organisations for body, head, eyes, ears and breathing. Never be in the vicinity of an engine when wearing loose clothing, jewellery or long hair.

The standard equipment required for entering the engine room or approaching and working on plant components, even outside the engine room, consists of eye protection, protective clothing, hand protection and safety footwear.

Depending on the operational condition of the plant, the ambient conditions, the type or location of the operation, use hearing protection, safety helmet, fall prevention equipment, gas sensors, breathing mask or other personal protective equipment, as appropriate.

You should also use your own powers of judgement to avoid hazards and dangerous situations and wear the appropriate personal protective equipment.

It is your duty to comply with all current official and quasi-official safety rules and codes applicable to your sector.

GE Proprietary Information: CONFIDENTIAL! Use or disclosure of data contained on this sheet is subject to the restrictions on the cover or on the first page.

Depending on the operating condition of the machinery or the operation, hazards may arise which cause injury, so wear the appropriate personal protective equipment. The examples below are not exhaustive.

Working when machinery is running:

- Hearing protection, eye protection, protective clothing, safety footwear, hand protection

Assembly operations during maintenance and repair:

Caution: many plant and engine components are heavy. This gives rise to a risk of severe crushing and impact injuries due to the heavy weight of the components.

- Safety footwear, protective clothing, hand protection!

Installation, construction site, difficult access:

Danger of falling, tipping or flying objects, swinging loads and bumping into obstacles, which can cause severe head injuries.

- Safety helmet, safety footwear!

Hot surfaces and liquids (oil, cooling water):

The engine, pipework, etc. can reach a surface temperature of up to 150°C.

- Thermal insulation gloves, protective clothing!

Pressurised pipes and containers:

Liquids such as engine cooling water and lubricating oil are hot and under pressure.

- Eye protection, protective clothing, thermal insulation gloves!

Working in dusty conditions:

Changing the air filter, cleaning operations, changing the active carbon, etc.

- Wear a breathing mask, eye protection, protective clothing and safety footwear!

Handling acids, starter battery, cleaning products, oil, anti-freeze and anti-corrosion products, chemicals:

- Acid- or chemical-resistant gloves and clothing, eye protection, safety footwear. Follow the manufacturer's instructions!

Working at height (above 1.2 m):

Even falls from low heights can result in serious injury. When working at height (above 1.2 m), where the provision of technical safeguards (e.g. handrails, work platforms, etc.) is either impossible or impractical, you should use:

GE Proprietary Information: CONFIDENTIAL! Use or disclosure of data contained on this sheet is subject to the restrictions on the cover or on the first page.

- personal fall arrest equipment consisting of harness and associated equipment (safety rope, karabiner hook, damper, lanyard or height safety device)!

Using fuel gas containing CO (read the results of the gas analyses):

- CO sensors as personal protective equipment! Ensure personal protective equipment is regularly maintained/ calibrated.

People who are under the influence of alcohol and/or drugs represent a danger to themselves and other people.

They must not be allowed to enter the engine room under any circumstances.

6 Transporting - lifting - installing

Familiarise yourself with the technical instructions concerning the requirements for the installation surface, lifting, transport safety pegs, transporting and positioning and installing GE Jenbacher modules, containers and switch cabinets, and the corresponding constraints.

Never use transport security shackles to lift components or modules. They are only used to secure components or modules to the transport vehicle.

GE Proprietary Information: CONFIDENTIAL! Use or disclosure of data contained on this sheet is subject to the restrictions on the cover or on the first page.

7 Shutdown procedure and making safe

Automatic machinery: liable to start without warning!

If the operating mode selector switch is in "Aut" position, the module may start without warning at any time.

Before commencing maintenance work, repairs, etc., shut down machinery as described below and secure to prevent unauthorised start-up!

Shut down and secure!

To shut down the engine:

Switch off the engine in accordance with **Technical Instruction No. 1100-0105** and ensure that unauthorised persons cannot start the engine.

Isolate from power supply before starting work!

Before starting work, isolate the machinery from the relevant circuits to prevent it from being restarted and check to ensure that the system is dead.

GE Proprietary Information: CONFIDENTIAL! Use or disclosure of data contained on this sheet is subject to the restrictions on the cover or on the first page.

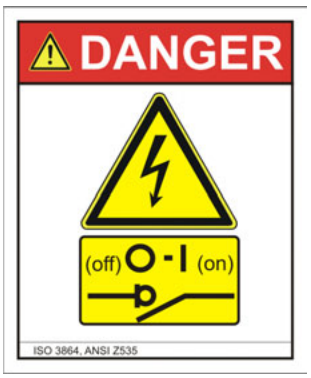

Dangerous voltage!

If you see this warning near the mains isolating device, this means that the mains isolating device does not switch off all electrical circuits. The 'except for' electrical circuits - i.e. the circuits that are not switched off - are shown in the circuit diagram.

Despite having isolated the machinery, you should regard all components as live.

Check that all components are disconnected!

High-voltage ignition system – 40 kV!

Improper use may be fatal!

The ignition system may cause electric shock.

Ignition systems may also produce **extremely dangerous voltages** when the equipment is **not operating**. This applies to all ignition system components, such as the cable, coil, connector, etc!

Hot surfaces!

Risk of burns

Let engine cool down, wear personal protective equipment!

Wear thermal insulation gloves and protective clothing!

GE Proprietary Information: CONFIDENTIAL! Use or disclosure of data contained on this sheet is subject to the restrictions on the cover or on the first page.

Risk of escaping liquids (hot and under pressure) **!**

Liquids such as engine cooling water and lubricating oil are hot and under pressure. Escaping liquids may cause serious injury.

Wear personal protective equipment!

Wear eye protection, thermal insulation gloves and protective clothing!

Allow the engine and cooling water to cool down before removing pipes, gaskets and covers or opening components that contain liquids. The pressure must first be reduced to zero. Only then, drain the cooling water if necessary. Liquids must be drained completely.

Risk of explosion!

When charging, batteries produce hydrogen and oxygen which under certain conditions may form an explosive mixture.

The battery provides 24 V DC even when the control system is switched off. Sparks generated at the battery poles can ignite an explosive atmosphere.

Check that the battery poles are firmly secured. No smoking, no naked flames, no sparks!

Poisonous gases!

The air in the engine room may be severely polluted with evaporating oil, cooling water, fuel gases or exhaust gases.

Ventilate the engine room thoroughly before starting work!

Ensure there is a fresh air supply when working in the engine room!

Wear personal protective equipment (gas sensors)!

GE Proprietary Information: CONFIDENTIAL! Use or disclosure of data contained on this sheet is subject to the restrictions on the cover or on the first page.

8 Engine room

No admittance for unauthorised persons!

Room contains electrical equipment!

Admittance for authorised and trained personnel only (specialist staff)!

In principle, the engine room is an enclosed, protected room for the unmanned operation of machinery.

Read the "Personal protection guidelines" in these safety instructions and wear the personal protective equipment appropriate to the dangers concerned!

Noise!

The noise produced when the machinery is operating or being started may damage your hearing.

Wear hearing protection!

GE Proprietary Information: CONFIDENTIAL! Use or disclosure of data contained on this sheet is subject to the restrictions on the cover or on the first page.

No pacemakers!

Because of the possibility of electromagnetic effects on pacemakers or similar devices, people with such devices are prohibited from entering the engine room.

No fire, naked flames or smoking!

Install fire extinguishers!

Fire extinguishers must be installed in places where they can be easily reached in the event of a fire. Comply with official regulations and establish the types, size and number of extinguishers required with your supplier and insurance agent.

GE Proprietary Information: CONFIDENTIAL! Use or disclosure of data contained on this sheet is subject to the restrictions on the cover or on the first page.

Risk of slipping!

Wipe up any spilt oil and coolant immediately and keep the machinery clean!

Highly flammable materials!

Keep oily rags in fire-proof containers. Never leave them lying on the engine.

Do not store flammable liquids near engines.
Keep the machinery clean!

Mark escape routes!

Mark escape routes from the engine room and keep them clear of obstructions.

GE Proprietary Information: CONFIDENTIAL! Use or disclosure of data contained on this sheet is subject to the restrictions on the cover or on the first page.

Risk of escaping liquids (hot and under pressure) **!**

Avoid danger zones around safety valve and explosion protection valve openings.

There are also danger zones around air filters.

Hot surfaces!

Risk of burns

Let engine cool down, wear personal protective equipment!

Wear thermal insulation gloves and protective clothing!

Poisonous gases!

Enclosed spaces must be well ventilated to ensure a constant supply of fresh air.

Rooms in which gas-consuming devices are operated must be ventilated.

If you become aware of unusual machine noise and unusual smells in the engine room, carry out a check. If you detect a gas concentration in a building, you should always observe the following instructions:

If you fear that a hazard exists, actuate the **Emergency Stop button** outside the engine room, close the gas safety shut-off valve outside the engine room and make sure that it cannot be opened unintentionally.

Prevent any possibility of ignition and, if possible, break all the electrical circuits from outside the danger zone.

GE Proprietary Information: CONFIDENTIAL! Use or disclosure of data contained on this sheet is subject to the restrictions on the cover or on the first page.

Evacuate all staff from the danger zone.

Allow air into the affected parts of the building by opening windows and doors.

Call in professionals to look for the gas leak and its cause and initiate damage repair.

Toxic gases (e.g.: CO, H2S, etc.)!

Read the results of the fuel gas analyses!

Fuel gases may be poisonous and may result in death or damage to health if inhaled.

Wear **gas sensors as personal protective equipment (appropriate to the poisonous gas components)** and ensure proper ventilation!

If the fuel gas contains carbon monoxide CO:

Carbon monoxide is a poisonous, **odourless, colourless, highly inflammable** gas, which is about as heavy as air.

Read the results of the fuel gas analyses!

Wear CO sensors as personal protective equipment when:

- the gas is odourless and the **CO content** of the fuel gas is **> 0%**.
- the gas contains **odorants** and the **CO content** of the fuel gas is **> 0.5%**.

Observe these guide values if no other safety guidelines are available or they are less stringent than the guide values. Country-specific thresholds/guidelines ALWAYS have priority. Also ensure that personal protective equipment is regularly maintained/calibrated.

CO concentration in the air and its effect if inhaled:

- 0.003 Vol% = 30 ppm — no/minimal risk to health
- 0.010 Vol% = 100 ppm — slight headache after several hours

GE Proprietary Information: CONFIDENTIAL! Use or disclosure of data contained on this sheet is subject to the restrictions on the cover or on the first page.

- 0.050 Vol% = 500 ppm — severe headache, dizziness, fainting after several hours
- 0.1 Vol%-0.2 Vol% = 1000-2000 ppm — **death after 30 minutes**
- 0.3 Vol%-0.5 Vol% = 3000-5000 ppm — **death after a few minutes**

Other symptoms: vomiting and nausea, buzzing in the ears, light-headedness, convulsions, hyperventilation, etc.

Risk of explosion

The air-gas mixture used as engine fuel is easily ignited and may explode.

Close and make secure the manual stop valve, ensure there are no sparks or naked flames, impose a strict ban on smoking and provide adequate ventilation!

9 Components

Protective devices should not be removed while the machinery is in operation.

Repair or replace damaged protective devices immediately.

Before removing any protective device, secure the machinery to prevent unauthorised start-up.

Shut down and secure!

Shutdown procedure and securing: Refer to section on "Shutdown procedure and securing" in these safety instructions!

9.1 Exhaust system

Engine exhaust gases are poisonous and may result in death or damage to health if inhaled.

Exhaust gases must always be discharged into the atmosphere.

The exhaust gas system must be inspected regularly to ensure that it is gas-tight:

GE Proprietary Information: CONFIDENTIAL! Use or disclosure of data contained on this sheet is subject to the restrictions on the cover or on the first page.

Visually	Cracks, corrosion, faulty gaskets
Odour	Exhaust smell

Locations at risk: Flange connections, gaskets, compensators, welded joints.

It is the operator's responsibility to ensure that there are no leaks in the exhaust system.

Poisonous gases!

Inhalation will result in damage to health or death.

Discharge exhaust gases into the atmosphere, check for leaks, provide adequate ventilation.

Hot surfaces!

Components which are not insulated and through which exhaust gas passes are very hot and can cause severe burns.

Let engine cool down, wear personal protective equipment!

Wear thermal insulation gloves and protective clothing!

9.2 Turbocharger

As the turbocharger operates at high temperatures, flammable material must be kept at a distance.

Work on the turbocharger must only be carried out once the engine has been shut down and room temperature has been reached, otherwise there is a risk of injury and fire.

GE Proprietary Information: CONFIDENTIAL! Use or disclosure of data contained on this sheet is subject to the restrictions on the cover or on the first page.

Hot surfaces!

Risk of burns

Let engine cool down, wear personal protective equipment!

Wear thermal insulation gloves and protective clothing!

Fire risk!

Fire

Avoid contact with flammable material and keep the machinery clean!

9.3 Fuel gas system

The engine is equipped for the fuel gas quality specified by the customer when the engine was ordered, and is adjusted for this gas when it is first put into operation.

Notify GE Jenbacher Customer Service before you convert the system to another type of fuel gas and each time the fuel gas quality is changed!

Please note: The air-gas mixture used as engine fuel is easily ignited and may explode.

As soon as fuel gas is present in the pipes **no welding work** must be carried out in the engine room concerned.

No **naked flames** may be used and a **strict ban on smoking** must be observed.

The guidelines below must be read in conjunction with other mandatory requirements (arrangement plan, Technical Instructions, statutory regulations, official directives, etc.) when assembling and operating the machinery:

The engine room ventilation must be designed so that gas concentrations are prevented and a slight overpressure exists in the engine room. (see TI 1100-0110 [⇨ TA 1100-0110, Page 1])

GE Proprietary Information: CONFIDENTIAL! Use or disclosure of data contained on this sheet is subject to the restrictions on the cover or on the first page.

Ensure that the pipes and components through which the fuel gas passes are fully leakproof.

A leak test as described in IW 8049 0 is required if a leak is detected or after repairs to pipes or components carrying fuel gas and mixtures.

Install a flame trap (depending on the legal requirements of the country where the equipment is located) in the gas supply line.

Plant-side safety valves must always be directed downwards.

A **manual stop valve** must be provided outside the engine room for intentional shutdown of the machinery (e.g. for repair and maintenance and in emergencies), preferably at the point where the gas pipes enter the engine room.

The manual stop valve must be designed to ensure that no unauthorised person can actuate it, i.e. open it when in locked position.

It is the operator's responsibility to ensure that the fuel gas system is equipped with the necessary devices, does not leak and satisfies official requirements.

Risk of explosion

The air-gas mixture used as engine fuel is easily ignited and may explode.

Gas being discharged could create a potentially explosive atmosphere.

No welding, no naked flames, strict ban on smoking, efficient maintenance/ inspection, leak tests, adequate ventilation gas alarm system, manual stop valve closed and made safe!

GE Proprietary Information: CONFIDENTIAL! Use or disclosure of data contained on this sheet is subject to the restrictions on the cover or on the first page.

Toxic gases (e.g.: CO, H2S, etc.)!

Note the results of the gas analyses!

Fuel gases may be poisonous and may result in death or damage to health if inhaled.

Wear **gas sensors as personal protective equipment (appropriate to the poisonous gas components)** and ensure proper ventilation!

You must also read the engine room guidelines in these safety instructions!

Extreme care is required when carrying out maintenance or repair work on the gas train and the gas pipes. These components contain quantities of residual gas which will escape when, for example, the gas filter is being changed!

9.4 Cooling system

The engine coolant is hot and under pressure at operating temperature.

Damaged or weathered pipes, gaskets, hoses and hose clips and other components must be replaced immediately. If these components fracture, hot coolant could injure people and cause a fire.

Keep away from pressure relief valves when operating the machinery.

Risk of escaping liquids (hot and under pressure) **!**

The fracturing of components causes hot coolant to escape, thereby posing a risk of injury.

Regular maintenance/inspection of components. Wear personal protective equipment (protective spectacles, protective clothing and thermal insulation gloves). Keep away from pressure relief valves!

GE Proprietary Information: CONFIDENTIAL! Use or disclosure of data contained on this sheet is subject to the restrictions on the cover or on the first page.

Hot surfaces!

Risk of burns

Let engine cool down, wear personal protective equipment!

Wear thermal insulation gloves and protective clothing!

To replace pipes and components:

Shut down and secure!

Shutdown procedure and securing: Refer to section on "Shutdown procedure and securing" in these safety instructions!

Coolants are treated with anti-corrosive and anti-freeze products.

Anti-freeze and anti-corrosion products are usually classified as harmful to health. Follow the manufacturer's instructions!

Wear personal protective equipment when handling anti-corrosion products, anti-freeze products and coolant! Follow the manufacturer's safety instructions!

Note disposal requirements!

9.5 heat exchanger

Heat exchangers are pressure vessels which are designed for specific pressure and temperature limits.

Operators must be made familiar with the specific design pressure and temperature.

GE Proprietary Information: CONFIDENTIAL! Use or disclosure of data contained on this sheet is subject to the restrictions on the cover or on the first page.

Heat exchangers must be pressure-tested on a regular basis.

A visual inspection of the following points of risk must be carried out: Flange connections, gaskets, locks and covers.

Any liquids escaping as the result of a leak may cause serious injury.

Keep away from pressure relief valves when operating the machinery.

Risk of escaping liquids (hot and under pressure)

The fracturing of components causes hot liquids to escape, thereby posing a risk of injury.

Regular maintenance/inspection, regular pressure-testing. Wear personal protective equipment (protective spectacles, protective clothing and thermal insulation gloves). Keep away from pressure relief valves! Reduce pressure!

Hot surfaces!

Risk of burns

Let heat exchangers and pipes cool down, wear personal protective equipment! Wear thermal insulation gloves and protective clothing!

Do not remove pipes, seals and covers from the cooling system until the components have cooled down, the pressure has been reduced and all liquids have been fully drained off.

To replace pipes and components:

GE Proprietary Information: CONFIDENTIAL! Use or disclosure of data contained on this sheet is subject to the restrictions on the cover or on the first page.

Shut down and secure!

Shutdown procedure and securing: Refer to section on "Shutdown procedure and securing" in these safety instructions!

9.6 Safety valve

Avoid the danger zones around the valves as they could open at any time during operation. There is a risk of injury due to hot operating materials under pressure.

Risk of escaping liquids (hot and under pressure)

The actuation of safety valves causes hot liquids to escape, thereby posing a risk of injury.

Wear personal protective equipment (protective spectacles, protective clothing and thermal insulation gloves). Keep away from pressure relief valves!

9.7 Lubrication system

The lubricant is hot and under pressure at operating temperature.

Hot oil or hot components may cause injury when you are carrying out an oil change or replacing the filter.

Oil leaks must be scrupulously avoided as oil spray or splashes may ignite on contact with hot engine components.

GE Proprietary Information: CONFIDENTIAL! Use or disclosure of data contained on this sheet is subject to the restrictions on the cover or on the first page.

Risk of escaping liquids (hot and under pressure)

The actuation of safety valves causes hot liquids to escape, thereby posing a risk of injury.

Wear personal protective equipment (protective spectacles, protective clothing and thermal insulation gloves). Keep away from pressure relief valves!

Hot surfaces!

Components of the lubrication system (oil lines and filters, valves, etc.) are hot and can cause severe burns.

Let components cool down, wear personal protective equipment! Wear thermal insulation gloves and protective clothing!

Fire risk!

Oil leaks must be scrupulously avoided as oil spray or splashes may ignite on contact with hot engine components.

Keep the machinery clean and carry out maintenance/inspection as instructed!

GE Proprietary Information: CONFIDENTIAL! Use or disclosure of data contained on this sheet is subject to the restrictions on the cover or on the first page.

Lubricating oils and oily rags must be disposed of as special waste.

9.8 Control system

The control rod assembly must not be obstructed while the machinery is operating. Any unauthorised adjustment or bending of the control rod assembly could cause the engine to race.

9.9 Ignition system

High-voltage ignition system – 40 kV!

Improper use may be fatal!

The ignition system may cause electric shock.

Ignition systems may also produce extremely dangerous voltages when the equipment is not operating.

Do not touch ignition system components such as the cable, coil, connector, etc. while the engine is running. Do not pull ignition cables off of coils! Ignition cables must not come into contact with other parts!

GE Proprietary Information: CONFIDENTIAL! Use or disclosure of data contained on this sheet is subject to the restrictions on the cover or on the first page.

The spark plug ignites an air-gas mixture in the combustion chamber. As a result, any air-gas mixture which has accumulated in the induction port, exhaust system or turbocharger may ignite. Failures must not simply be reset. Before restarting the module, you must first remedy the cause of the failure! Please read the rules on this subject in **Technical Instruction 1100-0111**.

Risk of explosion

Failures or incorrect operation (e.g. frequent unsuccessful attempts to start, resetting the fault contrary to instructions, cause of the failure not remedied, etc.) may cause an air-gas mixture to accumulate outside the combustion chamber and explode, thereby causing serious injury, death and severe damage.

Remedy failures, operate machinery and carry out maintenance and inspections in accordance with instructions!

9.10 Cables and insulated wiring

Dangerous electrical voltage

To protect you from the hazards posed by electrical energy, we would point out that the use of cables and insulated wiring must comply with the technical specifications issued by VDE, IEC, etc., in accordance with local regulations and such work may only be performed by authorised technicians (officially licensed electricians).

GE Jenbacher accepts no liability for injury, loss or damage due to improper installation.

9.11 Throttle valve

Do not obstruct or block the control rod assembly.

Do not attach objects to or suspend them from the control rod assembly.

Do not misuse the control rod assembly as a fixing point for fall prevention equipment.

GE Proprietary Information: CONFIDENTIAL! Use or disclosure of data contained on this sheet is subject to the restrictions on the cover or on the first page.

9.12 Electrical connections

Dangerous electrical voltage

All electrical connections involve a risk of making a direct

or indirect electrical contact. Contact could result in a serious, and possibly fatal, electric shock.

Connected components must be installed only by authorised experts (officially licensed electricians) in accordance with local regulations.

9.13 Generator

Dangerous electrical voltage

The voltage produced by the generator is **deadly**.

Contact could result in a serious, and possibly fatal, electric shock.

Connected components must be installed only by authorised experts (officially licensed electricians) in accordance with local regulations.

Make sure that the generator is earthed before it is operated for the first time.

Extreme caution is required if the generator or the area around it is damp or wet.

In the event of an accident caused by electric shock, shut the module down immediately by pressing the emergency stop button.

If the victim is injured or unconscious, summon a first-aider or medical assistance immediately.

If the generator is shut down by a safety device, do not restart it until the cause has been remedied.

During commissioning, the manufacturer of the power supply cubicle must implement the protective measures required under local regulations.

GE Proprietary Information: CONFIDENTIAL! Use or disclosure of data contained on this sheet is subject to the restrictions on the cover or on the first page.

Ensure proper earthing!

The machine must be **properly earthed** to prevent contact voltages and electrostatic charging contrary to regulations.

Make sure that the **engine is resting on non-conductive rubber bearings**.

9.14 Electrical cabinets

Dangerous electrical voltage

The voltage inside electrical cabinets is **deadly**.

Contact could result in a serious, and possibly fatal, electric shock.

Connected components must be installed only by authorised experts (officially licensed electricians) in accordance with local regulations.

Make sure that the control cabinet is earthed before the plant is operated for the first time.

Extreme caution is required if the electrical cabinet or the area around it is damp or wet.

In the event of an accident caused by electric shock, shut the module down immediately by pressing the emergency stop button.

If the victim is injured or unconscious, summon a first-aider or medical assistance immediately.

During commissioning, the manufacturer of the power supply cubicle must implement the protective measures required under local regulations.

GE Proprietary Information: CONFIDENTIAL! Use or disclosure of data contained on this sheet is subject to the restrictions on the cover or on the first page.

Ensure machine is properly earthed!

The electrical cabinet must be **properly earthed** to prevent contact voltages and electrostatic charging contrary to regulations.

Keep door closed!

Proper operating conditions for electrical devices can only be achieved with the cabinet door closed (e.g. weather exposure, heat, cold, dust, air-conditioning in the cabinet, etc.)

This relates to all types of electrical cabinets, e.g. interface, control cabinet, power cubicle, thermal reactor cabinet, etc.

Isolate from power supply before starting work!

Caution: electrical cabinets can be supplied from a number of energy sources!

Before starting work in electrical cabinets, isolate them from all energy sources to prevent them from being reactivated and check to ensure that the system is dead.

GE Proprietary Information: CONFIDENTIAL! Use or disclosure of data contained on this sheet is subject to the restrictions on the cover or on the first page.

9.15 Acoustic insulation (container; sound absorber hood)

Fire risk!

There is a risk of fire if loose lagging material comes into contact with hot engine parts.

Check acoustic insulation for damage,

Keep the machinery clean and carry out maintenance/inspection as instructed!

9.16 Battery

Corrosive substances!

The batteries used by GE Jenbacher are filled with dilute sulphuric acid, which may cause serious corrosion.

Avoid contact with eyes and skin!

Wear personal protective equipment!

Wear acid-resistant gloves, protective clothing, protective spectacles and safety footwear when handling battery acid!

Battery acid may leak if batteries are damaged (e.g. during repair work), its corrosive action causing damage to health as well as damage to the environment and property. Acid can also cause a chemical reaction with the lime in the concrete and damage the floor.

GE Proprietary Information: CONFIDENTIAL! Use or disclosure of data contained on this sheet is subject to the restrictions on the cover or on the first page.

Risk of explosion!

When charging, batteries produce hydrogen and oxygen which under certain conditions may form an explosive mixture.

The battery provides 24 V DC even when the control system is switched off. Sparks generated at the battery poles can ignite an explosive atmosphere.

Check that the battery poles are firmly secured. No smoking, no naked flames, no sparks!

Batteries, battery acid and rags contaminated with acid must be disposed of as special waste.

9.17 Container/enclosure

Extreme caution is required when carrying out maintenance and installation work on the roof. **Ensure workers are always safely harnessed to prevent a fall!**

Wear safety harness / Risk of falling!

Climbing on to the roof without a safety harness is extremely dangerous.

Secure the safety harness to suitable points provided on the roof!

Use personal fall arrest equipment consisting of harness and associated equipment (safety rope, karabiner hook, damper, lanyard or height safety device)!

GE Proprietary Information: CONFIDENTIAL! Use or disclosure of data contained on this sheet is subject to the restrictions on the cover or on the first page.

The container or enclosure housing the plant must be designed so that the plant does not pose any risks in the accessible area.

No ladders should be permanently attached to freely accessible containers or enclosures, so as to prevent unauthorised persons from climbing on to the roof.

Where pipework, ducts, system components, etc. have to be laid or installed in the accessible area, they must be positioned at such a height that they cannot be used for climbing or the system components installed within the danger zone will also have to be enclosed.

If this is not possible, or if other dangers exist, the operator must secure the plant so as not to allow unauthorised persons access to the danger zones.

Doors left open (e.g. during maintenance work) on the container, the enclosure, the air intake, etc. can be slammed shut by a gust of wind. This may result in hand or head injuries caused by crushing and impact.

Secure open doors with storm hooks (if available) or by other suitable measures!

Keep door closed!

All doors must be closed while the plant is operating! Proper operating conditions can only be achieved with doors closed.

GE Proprietary Information: CONFIDENTIAL! Use or disclosure of data contained on this sheet is subject to the restrictions on the cover or on the first page.

10 Maintenance and servicing

Caution: Automatic machinery: liable to start without warning!

The customer must make sure that before performing any maintenance work on the machinery, the relevant safety precautions are taken.

Refer to the section on "Health and safety during operation and maintenance" in these safety instructions.

Before commencing maintenance work, shut down the engine as described below and make sure that it cannot be started unintentionally!

Shut down and secure!

Shutdown procedure and securing: Refer to section on "Shutdown procedure and securing" in these safety instructions!

Work on the machinery may only be carried out by specialist staff who have received relevant electrical and mechanical training. There may also be a service or maintenance contract, under which all servicing is carried out by GE Jenbacher personnel.

Suitable safe lifting gear must be used when **assembling or disassembling heavy components**. Handling heavy components gives rise to a risk of severe crushing and impact injuries due to the heavy weight of the components. Wear personal protective equipment such as safety footwear, protective clothing, hand protection and safety helmet.

GE Proprietary Information: CONFIDENTIAL! Use or disclosure of data contained on this sheet is subject to the restrictions on the cover or on the first page.

Working at height (above 1.2 m):

When working at height (above 1.2 m), where the provision of technical safeguards (e.g. handrails, work platforms, etc.) is either impossible or impractical, you should use personal fall arrest equipment consisting of harness and associated equipment (safety rope, karabiner hook, damper, lanyard or height safety device)!

Poisonous gases in vessels below ground level, or in basins and pits!

Poisonous gases can accumulate in basins and pits, as well as in vessels below ground level (e.g. in condensate vessels).

Ensure proper ventilation or extraction to remove gas concentrations!

Check the maximum permissible workplace values (gas concentration).

Wear **gas sensors as personal protective equipment (appropriate to the poisonous gas components)**.

If the maximum admissible workplace values cannot be guaranteed, a suitable breathing apparatus must be worn.

Before carrying out any work on the machinery, the customer has a duty to ensure that safety will not be compromised.

Maintenance and repair work must be carried out with care. Temporary measures are not permitted:

- never repair fuses
- never deliberately ignore or re-use defective parts
- never place drip catchers under leaks
- never tighten screws, which have a specified tightening torque, contrary to the specification
- never make temporary repairs
- never implement unsystematic and unsuitable fault-finding procedures

Temporary repairs and makeshift arrangements may result in serious injury or damage the machinery.

Only repair methods specified in the engine documentation are allowed and are to be used.

GE Proprietary Information: CONFIDENTIAL! Use or disclosure of data contained on this sheet is subject to the restrictions on the cover or on the first page.

11 Cleaning

Fire risk!

Cleaning agents are usually highly flammable.

When carrying out cleaning operations, only use approved cleaning agents in well ventilated areas. Under no circumstances use petrol, paint thinners and other easily vaporising agents!

Keep cleaning agents and solvents away from flames and flying sparks!

Poisonous gases!

Avoid inhaling any gases as they may be fatal.

When carrying out cleaning operations, only use approved cleaning agents in well ventilated areas!

Read the labels on all cleaning agent containers and follow the instructions.

Never use unlabelled products.

Note disposal requirements.

GE Proprietary Information: CONFIDENTIAL! Use or disclosure of data contained on this sheet is subject to the restrictions on the cover or on the first page.

12 Disposal requirements for waste electrical and electronic equipment

Electrical and electronic equipment can contain harmful substances which can affect the environment and human health.

WEEE symbol (Waste of Electrical and Electronic Equipment):

the symbol for the separated disposal of electrical and electronic equipment is a crossed-out waste bin on wheels (Directive 2002/96/EC Waste Electrical and Electronic Equipment).

You must not dispose any electrical and electronic equipment marked with this symbol (battery-operated electrical appliances, measurement equipment, light-bulbs, etc.) in the domestic waste but dispose of these separately.

Always use the waste return and collection systems locally available and contribute to the reuse, recycling and all other forms of use for waste electrical and electronic equipment.

GE Proprietary Information: CONFIDENTIAL! Use or disclosure of data contained on this sheet is subject to the restrictions on the cover or on the first page.

GE
Energy

Technical specification of the Control

1 x JGS 420 GS-L.LC
BUNCOMBE COUNTY LANDFILL
J J183

Index: -
Vorbehaltlich techn. Änderungen!
Revision reserved!

© GE Jenbacher GmbH & Co OHG
Achenseestr. 1-3
A-6200 Jenbach (Austria)

1. Plant Short Description 3
1.1 Plant Summary 3
1.2 Fuel Gas 3
1.3 Principal Drawing Electric 3
1.4 Heating Schematic 3

2. Auxiliaries 4
2.1 Starting Equipment 4
2.2 Control System Power Supply 4
2.3 Jacket Water Preheating M.04-W-002 4
2.4 Engine Jacket Water Circulating Pump M.04-M-001 4
2.5 Intercooling Water Pump P.07-M-001[01] 4
2.8 Fresh Oil Pump P.03-M-002 5
2.9 Waste Oil Pump P.03-M-001 5
2.10 Pre-Lube and Cool Down Oil Pump 5
2.12 Temperature Control: 5
2.13 Container Ventilation 5
2.14 Fire and Gas Alarm 7
2.15 Dump radiation cooling 7

3. Function of the Cogeneration Plant 8
3.2 Customers request with customers power set point 8
3.6 Engine Control Functions 8
3.7 Generator Controller Functions 9
3.8 Mode of Operation with Mains Failure 9

4. Conditions 10
4.1 Parallel Operation 10
4.2 Grid Monitoring Unit 10
4.3 Safety Loop of the CHP 10
4.4 Requirement for Cabling performed by the Customer 11

5. Operation Modes of the CHP-plant 12
5.1 Automatic Operation 13
5.2 Manual CHP-Operation 14
5.3 Automatic Synchronizing Generator Circuit Breaker 15
5.4 Manually Initiated Automatic Synchronizing Generator Circuit Breaker 16

7. Electrical Hardware 17
7.1 Module Control Cabinet per Module 17
7.2 Module Interface Cabinet 21
7.5 Generator Switchgear Cabinet 21

8. Remote Data-Transfer with DIA.NE XT - HERMES 22
8.1 General 22
8.2 Connections methods 22
8.3 Applications 23
8.4 Technical prerequisites 25

Appendix : „ALARM LIST“

Modification:

index	datum	ref. point	comment	name

1. Plant Short Description

1.1 Plant Summary

1 gas engine genset
Fitted with 3 phase synchronous generator 480/277 V + 5%, 60 Hz.
Total electric power: 1x 1426 kW at pf. 1
1x 1416 kW at pf. 0,8

1.2 Fuel Gas

Landfill gas

1.3 Principal Drawing Electric

See J J183 +U/page 5

1.4 Heating Schematic

Customer supply and GE Jenbacher hydraulic drawing J J183 00 03

2. Auxiliaries

2.1 Starting Equipment

Starter batteries: lead/acid
24 V, 320Ah per module.
Detailed description see TA-Nr. 1000-0050.

Charger:
24 V, 40 A
with integrated control system power supply 24 V =, 18 Ah. Used for module controller.

2.2 Control System Power Supply

24 V=, min. 22 - max. 30 V (inclusive of ripple) at GE Jenbacher terminal. max ripple Uss = 2,4 V.

2.2.1 Control voltage for module control cabinet

Control voltage for module control cabinet from starter batteries.

2.2.2 Control voltage for common cubicles (synchronizing, ...)

provided by starting batteries, connected via diodes.

2.2.4 Control batteries supplied by customer.

1 per plant.

2.3 Jacket Water Preheating M.04-W-002

3x 480V, 60 Hz, 9 kW:
Thermostatically controlled between 131 °F – 140 °F.

Status Display (screen P_04.1)
"PREHEATING WATER CIRC. PUMP ON/OFF"
"PREHEATING ON/OFF"

The module will be preheated continuously whilst the service selector is in the manual or auto position.
When service selector switch is "OFF", preheating is switched off. (Electric heating elements, circulating pump, thermostat).

2.4 Engine Jacket Water Circulating Pump M.04-M-001

Jacket Water Circulating Pump 3x 480 V, 60 Hz, 5,5 kW:
Pump operates during module operation and during 5 minutes cool down run.

2.4.1 Jacket Water Circulating Pump M.04-M-002

277 V, 60 Hz, 245 W:
Pump operates during engine shutdown and auxiliary cool down phase.
When service selector switch is "OFF", the circulating Pump is switched off.

2.5 Intercooling Water Pump P.07-M-001[01]

3x 480 V, 60 Hz, 1150 W:
Pump operates during module operation and during 5 minutes cool down run.

2.8 Fresh Oil Pump P.03-M-002

3x 480 V, 60 Hz, 750 W:

☞ Operated with a control switch near to the pump. Controlled by two level switches.

2.9 Waste Oil Pump P.03-M-001

3x 480 V, 60 Hz, 750 W:

☞ Controlled with a control switch near by the pump. Controlled by level switch "HIGH".

2.10 Pre-Lube and Cool Down Oil Pump

1x 24 VDC, 1,1 kW, **M.03-M-003**

Controlled by module PLC.

Operating time > 1 minute before engine start. Once engine speed exceeds 800 rpm, the pump is switched off. After module stop, the pump continues to operate for 20 minutes in order to cool down the turbocharger.

☞ Additionally, the pump can be manually controlled in order to preheat the lube oil.

2.12 Temperature Control:

2.12.2 Fuel Mixture Temperature Control:

PID regulator to ensure that the fuel mixture(water) temperature is stable and does not in/decrease.

Consists of
- 3 way valve 18 W/24 VAC **P.07-YTC-001**
- Pt100 sensor (PTC) **E.08-TI-001**
- PID controller

Display on controller:
x = Actual fuel mixture(water) temperature
y = Command to 3 way valve
w = Desired temperature (set point)

2.13 Container Ventilation

2.13.1 Air inlet louvre, P.17-M-0xx

24 VDC, 5 W

The louvre 1 + 2 will be opened with the demand of auxiliaries or an engine room temperature (104 °F.

All louvres are opened at GAS-PREALARM | GASALARM. The louvers are also open during cool down run, and will be closed at fire alarm or with tripped safety - chain.

Status Display (screen P_04.1):
"AIR INLET LOUVRE 1 OPENED/CLOSED"
"AIR INLET LOUVRE 2 OPENED/CLOSED"

2.13.2 Air outlet louver, P.17-M-0xx

24 VDC 5 W

The outlet louver will be opened with the demand of auxiliaries or an engine room temperature (104 °F.

All louvers are opened at GAS-PREALARM|GASALARM. The louver(s) is(are) also open during cool down run, and will be closed at fire alarm or with tripped safety - chain.

Status Display (screen P_04.1):
"AIR OUTLET LOUVRE OPENED/CLOSED"

2.13.3 Inlet air ventilators P.17-M-2xx

3x 480 V, 2x 4,6 kW

The ventilator(s) are speed controlled by frequency converter. The condition for operation is, that the air inlet and outlet louver is open. (At gas pre alarm/gas alarm the ventilators will operate at max. speed.)
With disabled demand for the louvers the ventilators are switched off.
PID regulation device to ensure the desired room temperature.

Consists of:
- Frequency converter
- Pt 100 sensor **P.17-TI-010**
- PID – controller

The release of the controller happens if: All Inlet- and outlet air louvers are open, the generator C.B. is closed and the container inside temperature is ≥ 82,4 °F, no gas pre alarm/gas alarm is present.

Display on controller:
x = Actual room temperature
y = Command to frequency converter
w = Desired temperature (set point)

If the engine room temperature reaches 122 °F, the engine (module) is stopped.

Signal " ROOM TEMPERATURE HIGH"

2.14 Fire and Gas Alarm

a) One smoke sensor **P.17-JI-21x** at the engine room and control room with alarm and stop device.
In event of a smoke alarm, an emergency stop for the total plant will be activated.
All louvers will be closed and the ventilators stopped.
If “fire alarm” and “gas pre alarm”/”gas alarm” are present simultaneously, the function of gas pre alarm/gas alarm has priority against fire alarm.

Signal "FIRE ALARM"

b) One gas-leakage sensor **P.17-JI-100[xx]** per module with alarm and stop device.
At 20% lower explosion limit the module will stop. All louvers will be opened/remain open and the room-ventilators run on full speed/continue to operate.

Signal "GAS-PREALARM"

At “gas alarm” at 40% lower explosion limit the louvers remain open; the room-ventilators keep running at highest speed.

Recommendation:
At “gas alarm” at 40% lower explosion limit the customer should switch off all AC-circuits.
The 24 VDC supply however remains in order to keep the monitoring system active.

Signal "GASALARM"

2.15 Dump radiation cooling

2.15.1 Dump radiator P.04-W-00x[xx]

3x 3kW, 480V, 60Hz
As dump radiator a table cooler with 3 fans is used, which is controlled in 3 steps. The steps are switched depending on the position of the control valve. The on off sequence of the fans will be changed after every cycle.

3. Function of the Cogeneration Plant

The TI-No.. 1100-0110 „Boundary conditions for GE Jenbacher gas engines“ has to be followed.

3.2 Customers request with customers power set point

The module is requested into operation via a customer supplied potential free contact (interface No. 15).
Contact closed = Module operation
Contact opened = Module stop
The power control is performed via to a customer supplied potential free and linear mA signal
(0/4 - 20 mA = 50 - 100% nominal power interface No. 28)

3.6 Engine Control Functions

3.6.1 Knocking Control:

All cylinders of the engine are fitted with analog knocking sensors (E.00-AI-101[xx]), the signals are pre-processed by an analysis electronic and transmitted to the DIA.NE. If the knocking signal exceeds a certain level and subsequently a knocking limit, the knocking control will be activated.

If the knocking signal exceeds background level, the ignition timing point will be adjusted (delayed) and as a further measure (if applicable) the fuel | air mixture temperature will be reduced and as a last resort, the engine power will be reduced during parallel operation with the mains with a specific time constant until the knocking signal is once again less than or equal to the background level. Once this is achieved, the engine power is once again raised to the nominal load, but at a higher time constant. If, due to knocking, the engine power must be reduced to 50% or less than nominal output, the module will be shut down for reasons of safety.

Failure Message "KNOCKING TROUBLE"

Failure Message "KNOCKING TROUBLE cylinder xx"

3.6.2 Power Reduction Related to Mixture Temperature

If mixture temperature (E.08-TI-001) exceeds 123,8 °F, then the engine power will be reduced during parallel operation with the mains by 4% per degree C / 2% per degree F excess. If mixture temperature exceeds 131 °F the engine will be shut down and the message "FUEL MIXTURE TEMPERATURE HIGH" will be displayed.

3.6.3 Power Reduction due to Misfiring

Every detected misfiring is displayed. The detection takes place according power surges. Every recognised misfire event will be summarised with the misfire integrator. The increase and decrease speed of the integrator is adjustable. If the integrator reaches a level of 50% the engine output will be reduced, at an integrator level of 100% the engine output will be reduced to 50% and subsequently the engine will be stopped. A misfiring alarm will appear at a settable value of the integrator.

Message "POWER REDUCTION - MISFIRE" (screen P_41.1)

If due to misfiring, the engine power must be reduced to 50% output then a module shutdown is performed due to safety reasons.

Failure Message "MISFIRING TROUBLE"

3.6.5 Locking engine from gas supply

With locking the engine from gas supply (interface No. 60.1) the engine will be shut down without any cool-down run. The engine will be able to resume operation after deleting the lock from the gas supply and a minimum standstill time of 5 minutes.

Message "MODULE LOCKED OUT"

3.6.6 Engine control with "Gas type 1-2"

The optimal start position is calculated by means of the calorific value of the gas and via interpolation of the gas types in the engine control system (GAS 1-2). The calculation is enabled via a customer provided CH4 signal or calorific value signal. If a CH4 signal or calorific value signal is not available, the motor will be started at a preset gas mixer start position.
Attention: The CH4 signal or calorific value signal must represent the true gas quality that the motor receives (normally only possible in conjunction with a sample line).

3.6.10 Power reduction based on the gas pressure in the pre chamber gas train (P.14-PI-102)

Function: with this set-up, the engine output is limited depending on the gas pressure in the pre chamber gas train. Message " POWER REDUCTION PRESSURE PRE CHAMBER GAS TRAIN " (screen P_41.1)

3.7 Generator Controller Functions

3.7.1 Effective power reductions

To protect the generator, the effective power generated is reduced to certain limits.
A reduction takes effect in the case of:

- undervoltage (average voltage)
  Message "POWER REDUCTION UNDERVOLTAGE"
- overvoltage (average voltage)
  Message "POWER REDUCTION OVERVOLTAGE"
- underfrequency
  Message "POWER REDUCTION UNDERFREQUENCY"
- overfrequency
  Message "POWER REDUCTION OVERFREQUENCY"
- winding temperature too high (only if windings Pt100 assembled)
  Message "POWER REDUCTION WINDING TEMPERATURE"

3.7.2 Reactive energy reductions

- Limiting the reactive energy / cos phi at high winding temperatures
  The highest of the 3 phase temperatures is taken as the actual value of the winding temperature. This reduction is only activated if the assembled winding Pt100s are activated (not with PTC resistors).
  Message "REACTIVE POWER REDUCTION WINDING TEMPERATURE"

- Generator operation at the underexcited stability limit using pole wheel angle reduction
  Message "REACTIVE POWER REDUCTION POLAR WHEEL ANGLE"

3.7.3 Reactive energy / cos phi control

- **Internal setpoint:**
  The cos phi is a fixed value.

3.8 Mode of Operation with Mains Failure

After response of the grid monitoring relay (ANSI code: 27,59,81,78)-(G59 for G.B.) following a mains failure (disturbance), the generator circuit breaker (GCB) will be opened.
The module will be shut down without any cool-down run. No island mode (standby) operation is available in this case. After return of stable mains conditions for 5 minutes duration, the module will resume operation.

4. Conditions

4.1 Parallel Operation

The module(s) operate(s) in parallel with the mains. The relevant standards for parallel operation with the mains are complied with.
The engine and exhaust heat are supplied to the customers heating circuit.
Terminal point electricity:

4.2 Grid Monitoring Unit

Monitoring of the mains voltage regarding: (G59 for G.B.)

Overvoltage 3-ph	110% UN
Undervoltage 3-ph	90% UN
Overfrequency 1-ph	51,5 Hz
Underfrequency 1-ph	49 Hz

Auto reclousure, detected by a 3 phase vector shift relay within 100 msec.
After response of the mains prodection relay caused by a mains disturbance, the generator circuit breaker (Gen. C.B.) will be commanded open.
The maximum opening time of the Gen. C.B.must not exceed 60 msec following a mains short interruption of minimum 200 msec (3 ph).

Warning: If the mains specification does not meet the above requirements (Continental European Standard) then GE Jenbacher will require a mains condition analysis from the customer.

4.3 Safety Loop of the CHP

4.3.1 CHP Plant Safety Loop

For the total CHP plant, a current loop safety circuit for the following is provided.
- Emergency stop (contact external | GE Jenbacher)
- Gas alarm (contact external | GE Jenbacher)
- Fire alarm (contact external | GE Jenbacher)

Tripping of the safety loop produces an immediate shut down of the total CHP plant.

4.3.2 Gas Engine Safety Loop

For each engine | CHP module, a current loop safety circuit for the following is provided.
- Emergency stop
- Over speed
- Ignition monitoring
- Control of switchgear under voltage trip device for,
  Alternator reverse power
  Shutdown fault
  Missing power signal
  Power signal overload
- Heating water temperature high (Temperature safety limit unit) (P.06-TS-001)
- Heating water pressure high (Pressure safety limit unit) (P.06-PS-001)
  Tripping of the safety loop shuts down only the appropriate module | engine.

4.4 Requirement for Cabling performed by the Customer

Cable installation must comply with TA-Nr. 1000-0505.
The cross sectional areas for the power cables supplied by the installer must be in compliance with IEC 60204-1 as well as IEC 60364-5-52 (methods of installation, grouping ...).

4.4.1 Generator power cables:

See TA-Nr. 1100-0112 „Installation of GE Jenbacher Units"!
Generator current: In = 2129A, at p.f. 0,8.
Installed in such a manner as to reduce the risk of a short-circuit to a minimum, and not be placed close to combustible material.

4.4.2 Only flexible cables are permitted.

5. Operation Modes of the CHP-plant

Functions of the service selector switch and the module demand selector-switch:

Service - selector - switch	Demand - selector - switch	Start	Stop	Set point for engine power control
STOP	-	-	-	-
MANUAL	-	**START** – key at DIA.NE XT	**STOP** – key at DIA.NE XT	internal
AUTOMATIC	OFF	-	Module demand cancelled	-
	REMOTE	Demand from customer or master control	Demand is cancelled by the customer or master control	Variation: internal
				Variation: external from customer or master control
	ON	Module is demanded		internal

Control of the generator circuit breaker (GCB) in dependence of the synchronizing selector switch of the module control

Synchronizing selector switch	Opening of the generator CB	Synchronizing generator CB
MANUAL	 Key at DIA.NE XT Cancellation of a running manual synchronizing	 Key at DIA.NE XT for sync. selection. Closing of the CB happens automatically.
OFF	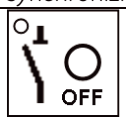 Key at DIA.NE XT	Synchronizing of the Generator CB will be cancelled / blocked
AUTOMATIC	automatically	automatically

5.1 Automatic Operation

According the CHP-functions for all available modules.
- with the demand selector-switch in pos. “REMOTE“ via interface no. 15 from the customer or from the master control
- with the demand selector-switch in pos. „ON“

Conditions for Automatic-start:

☞ Service selector switch in position "Automatic"
Safety chain is o.k.
No malfunction of the module (module specific)
Jacket water temperature (M.04-TI-001) > 104 °F
Engine is not running
Visual signal "READY FOR AUTOMATIC START - ENGINE STOPPED"
Voltage free signal "ready for automatic start"

"Demand" from the master control/from the customer.
- Contact closed: Engine starts up
- Contact opened: Engine stop's

The demand causes:
Visual signal: "START PROGRAM RUNNING"
Prelubrication pump (M.03-M-003) on
Demand heating water circuit/heating water circulating pump (P.06-M-001)
- answer back signal bypass flap (P.02-YCS-002) is opened

6 sec. after release for start:
Visual signal: "AUTOMATIC START IS RUNNING"
Starter (E.00-M-001[xx]) on, ignition on
With answer back "Ignition operating", the gas valves (P.01-YCZ-xxx) are opened.

The engine ignites and powers up:
The starter (E.00-M-001[xx]) will be disengaged when the speed is higher start speed.
Visual signal: "START PROGRAM ENGINE RUNNING UP TO RATED SPEED"
Jacket water preheating (M.04-W-002) off.
Prelubrication pump (M.03-M-003) off with engine speed greater than 800 rpm.
If the engine doesn't ignite a 2nd attempt will follow.
If the 3rd attempt is also not successfully, a further start is blocked.
Visual signal "START UP TROUBLE" and further start attempts are prevented.

Operational Messages:
10 seconds after engine start and power up, the lube oil pressure monitoring (M.03-PI-001) is activated.
Visual signal "ENGINE IDLE OPERATION - ....."

Potential free contact "Operation | Engine is running" issued to master control and for the customer.
Visual signal " ENGINE IDLE OPERATION SYNCHRONIZE-/LOAD RELEASE".

<u>Synchronizing</u>:

☞ The synchronizing is performed automatically when synchronizing selector switch is in automatic position.
Visual signal "MAINS PARALLEL OPERATION".

Automatic Loading:
After the closure of generator C.B., the module power will be raised to its set point.

Shutdown during Automatic Operation
Reason: "Demand Module" signal from master control/customer is removed in pos. „REMOTE“ of the demand selector-switch or with the demand selector-switch in pos. „OFF“

☞ The load is reduced. Once load is less than 10% PN, the generator C.B. will be opened by the breaker control.

Visual signal " STOP PROGRAM: ENGINE COOL DOWN RUN"

After one minute cool down run, the gas valves (P.01-YCZ-xxx) are closed.
Contact "operation | Engine is running" is removed.

Visual signal "STOP PROGRAM : ENGINE STOP SEQUENCE".

Ignition off and once engine speed is less than start speed

Visual signal "READY FOR AUTOMATIC START ENGINE STOPPED"

Shut down check of gas train (leakage detection P.01-US-xxx)
Pre-lube pump (M.03-M-003) operates for 20 minutes for cool down of turbocharger.
Auxiliaries operate for 5 minutes (hot water circulating pump (P.06-M-001),...)

5.2 Manual CHP-Operation

☞ The CHP module can be operated manually by setting the service selector switch in position "Manual". The load up/down of the module is thus manually operated.
The synchronizing function is automatic or manual (manually started auto synchronizing) depending on synchronizer selector switch position.

Conditions for the Manual Start:

☞ Service selector switch in pos. manual.
Safety chain is o.k.
No module malfunction (module specific)
Engine is not running

Visual signal: "READY FOR MANUAL START ENGINE STOPPED"

☞ Press start button for "start preparation"

The demand causes:

Visual signal: "START PROGRAM RUNNING"

Demand prelubrication pump (M.03-M-003)

Demand heating water circuit (P.06-M-001)
- answer back signal heating water flow o.k. (P.06-FS-001)

If all conditions are o.k.:

Visual signal "START ENGINE (PUSH START BUTTON) "

☞ Press start button

Starter (E.00-M-001[xx]) on | Ignition on

With answer back "Ignition operating", the gas valves (P.01-YCZ-xxx) are opened.

The engine ignites and starts up.

Visual signal "START PROGRAM : ENGINE RUNNING UP TO RATED SPEED".

☞ Release start button

The starter (E.00-M-001[xx]) will be disengaged when the speed is higher than the start speed.
The cooling water preheating (M.04-W-002) is switched off.
The prelubrication pump (M.03-M-003) is switched off with an engine speed > 800 rpm.

Operation signals:
10 sec. after start and power up, lube oil monitoring (M.03-PI-001) is switched on

Visual signal: "ENGINE IDLE OPERATION ....."

Voltage free signal: "Operation | Engine is running" to the customer

Synchronizing:
The synchronizing is possible in 2 modes: manual (manual initiated automatic synchronization) and full automatic.

☞ Manual loading (load control):
With keys on the DIA.NE in the control panel.

Shut down in Manual Operation:
Before shutting down engine, decrease load using the DIA.NE.

☞ Synchronizing selector switch in position "Manual" or "Off"

☞ Switch off generator C.B. with < 10 % engine power.

Visual signal: "ENGINE IDLE OPERATION SYNCHRONIZE-/LOAD RELEASE"

☞ After 1 min. cool down run, stop engine with "Stop" button.
"Generator C.B. Release" is removed and the engine is shut down.

Afterwards the gas safety line will be checked (P.01-US-xxx).
Prelubricating pump (M.03-M-003) runs for 20 min. for turbo charger cool down.

Visual signal: "READY FOR MANUAL START - ENGINE STOPPED"

5.3 Automatic Synchronizing Generator Circuit Breaker

☞ Synchronizing selector switch in position "Automatic"
Release from the module control (Synchronizer/Load Release)
Engine operating
Jacket water temperature (M.04-TI-001) > 131 °F (when service selector switch is "Automatic")
Generator C.B. is opened
Generator C.B. is ready for closure

Automatic synchronizing selection

Status display "SYNCHRONIZING IS RUNNING"

Illuminated button "GENERATOR CB ON/ SELECTION" is flashing
- Select bus bar voltage
- Select generator voltage
- Preparation of the synchronizer
- Select generator C.B.
- Select speed adjustment

Automatic tuning of the generator voltage to the bus bar voltage.

Automatic tuning of the generator frequency to the bus bar frequency by the synchronizing unit.
Closing command to the generator C.B. by the synchroniser at the moment of synchronizing.

- Illuminated button "GENERATOR CB ON/ SELECTION" is lighting
- Answer back "GENERATOR CIRCUIT BREAKER CLOSED" (screen P_11.1).
- Status display "MAINS-PARALLEL OPERATION"

5.4 Manually Initiated Automatic Synchronizing Generator Circuit Breaker

☞ Synchronizing selector switch in position "Manual"
Release from the module control (Synchronizing | Load Release)
Engine operating
Generator C.B. is opened
Generator C.B. is ready for closure

☞ Press button "GENERATOR CB ON/ SELECTION"

- Status display "SYNCHRONIZING IS RUNNING"
- Illuminated button "GENERATOR CB ON/ SELECTION" is flashing
  - Select bus bar voltage
  - Select generator voltage
  - Select generator C.B.
  - Select speed adjustment

Automatic tuning of the generator voltage to the bus bar voltage.
Automatic tuning of the generator frequency to the bus bar frequency by the synchronizing unit.
Closing command to the generator C.B. by the synchroniser at the moment of synchronizing.

- Illuminated button "GENERATOR CB ON/ SELECTION" is lighting
- Answer back "GENERATOR CIRCUIT BREAKER CLOSED" (screen P_11.1).
- Status display "MAINS-PARALLEL OPERATION"

7. Electrical Hardware

Design of the enclosures:
All enclosed, steel, free standing cabinet with front opening door, rubber door seals, completed to terminal strips for interconnection by customer via a cable channel (double floor). Cable exit from underneath.

design according IEC 60439-1 | EN 60439-1 and ISO 8528-4.
ambient temperature 41 °F - 104 °F
Enclosures: Rittal, Type TS 8
colour RAL 7035

7.1 Module Control Cabinet per Module

Consisting of:
DIA.NE XT3 motor management system
System elements visualisation with central engine and module control

a) Visualisation:
Industrial control with 10,4“ colour graphics display.
10-key numeric keyboard for parameter input.
Keys for START, STOP, display selection keys and special functions.
Interfaces:
- Ethernet (twisted pair) for connection to DIA.NE WIN server
- CAN-Bus: bus connection to the intelligent sensors and actuators
- B&R bus connection to the control in- and outputs

OPTION: Interfacing with the customer’s plant management according to GE Jenbacher list of options (MODBUS-RTU Slave, PROFIBUS-DP Slave)

Protection class DIA.NE XT front: IP 65
Dimensions: W x H x D = approx. 323 x 358 x 105 (12,7 x 14,1 x 4,1 in)

A clear and functional graphic compilation of measured values is displayed on the screen. User prompts are by means of direct-acting display selection keys and function keys.

Main displays:

- Generator interconnection, with electrically measured variables and display of excitation voltage (**OPTION**: generator winding temperature and generator bearing temperature displays)
- Oil and engine cooling water circuits, with displays of oil pressure and temperature, and cooling water pressure and temperature.
- Exhaust gas temperatures in a column graph which also displays the average temperature.
- Main engine controller
- Module auxiliary controller
- Auxiliary systems (status display)

- Operational data, i.e. operating hours, service hours, number of starts, active power demand (kWh), reactive power demand (kVArh), and measured values for operational logbook.
- System display, i.e. time, password, brightness, contrast, diagnostics.

Graphic trending display of up to 16 measured values:

- Long term trending (1 month at a storage interval of 30 sec.)
- Short term trending (20 min. at a storage interval of 1 sec.) - stopped and stored in the event of a malfunction.

Recipe handling:
Setting, display and storage of all module parameters

Alarm management:
- Efficient diagnostic instrumentation listing all active fault messages both tabular and chronologically, with the recorded time.

b) Central engine and module control:

A real-time, modular industrial control system which handles all jobs for module and engine-side sequencing control (start preparation, start, stop, after-cooling, control of auxiliaries), as well as all control functions.

Interfaces:

Control functions:
- Speed control in no-load and isolated operation
- Power output control in parallel operation system; job-specific with respect to internal and external set point values.
- LEANOX control system for control of boost pressure; dependent upon the generator terminal power and the mixture temperature via the engine-driven air-gas mixer
- Knocking control: adjustment of the ignition point, power output and (insofar as is locally possible) the mixture temperature in the event of detection of knocking.
- Load sharing between several modules in isolated operation
- Linear reduction of power output in the event of excessive mixture temperature and ignition failures

- Interface relays as per the interface list
- Multi-transducer, to record the following electrically measured variables of the generator:
  - Phase current (with slave pointer)
  - Neutral conductor current
  - Voltages Ph/Ph and Ph/N
  - Active power (with slave pointer)
  - Reactive power
  - Apparent power
  - Power factor
  - Frequency

An additional 0 (4) - 20 mA output is produced for active power, as well as a pulse output for active power demand.

The following alternator supervisions are integrated with the multi-transducer (max. 8 functions simultaneous):
- Overload/short-circuit [51], [50]
- Over voltage [59]
- Undervoltage [27]
- Asymmetric voltage [64], [59N]
- Unbalance current [46]
- Failure Exitation [40]
- Overfrequency [81>]
- Underfrequency [81<]

- Lockable service selector switch with the following positions:

☞ "Stop": No start up possible
If the engine runs and the switch is turned to "STOP" the engine stops immediately.

☞ "Manual": Full manual operation (start, stop) possible.
The module is not available for full automatic operation.

☞ "Automatic": Full automatic operation in case of request from the master control or potential free contact.
- Automatic start
- Fully automatic operation with internal | external power command
- Shut down of module includes 1 minute engine cool down run and 5 minute cool down run for the auxiliaries.

- Module demand selector-switch with the settings:

☞ external demand not available. („OFF“)

☞ external demand. („REMOTE“)

☞ external demand contacts shorted. („ON“)

Supply disconnecting device for auxiliaries with lockable switch- disconnector

STATUS MESSAGES
In the status bar of the GUI, the current operational status of the module will be displayed. eg.
SERVICE SELECTOR SWITCH OFF
SERVICE SELECTOR SWITCH MANUAL NOT READY TO START
SERVICE SELECTOR SWITCH AUTOMATIC NOT READY TO START
READY FOR MANUAL START ENGINE STOPPED
READY FOR AUTOMATIC START ENGINE STOPPED
START PROGRAM RUNNING
START ENGINE (PUSH START BUTTON) (IN MANUAL OPERATION)
WAITING TIME BEFORE RELEASE OF NEXT MANUAL START (IN MANUAL OPERATION)
AUTOMATIC START IS RUNNING (IN AUTOMATIC OPERATION)
START PROGRAM: ENGINE RUNNING UP TO RATED SPEED
ENGINE IDLE OPERATION NO SYNCHRONIZE-/LOAD RELEASE
ENGINE IDLE OPERATION SYNCHRONIZE-/LOAD RELEASE
SYNCHRONIZING IS RUNNING
MAINS-PARALLEL OPERATION
STOP PROGRAM: ENGINE COOL DOWN RUN
STOP PROGRAM: ENGINE STOP SEQUENCE

MODULE LOCKED OUT

FAILURE MESSAGES MODULE CONTROL (ALARM MANAGEMENT):
see Appendix "ALARM LIST (STÖRMELDELISTE)"!

Synchronizing of the generator CB (and mains CB in case of pure single synchronizing)
Synchronizing elements:

- Lockable synchronizing selector switch with following positions:
  - "MANUNAL":
  - "OFF":
  - "AUTOMATIC":
- Synchronizing unit - with frequency balance and following displays:
  - Double voltmeter - for monitoring of bus bar and generator voltage
  - Double frequency meter - for monitoring of bus bar and generator frequency
  - Synchronouscope - for monitoring of the synchronizing function during synchronization
- Mains protection relay (f <>, V <>, Δθ) - G59 for G.B.
- All required control, display and command devices

"GENERATOR CB ON/ SELECTION" key at the DIA.NE XT

"GENERATOR CB OFF" key at the DIA.NE XT

"Mains CB OFF - ON/ SELECTION" control switch

Synchronizing monitoring see Appendix "ALARM LIST"

- MONIC

The **monic** (**mon**itoring **i**gnition **c**ontrol) is used to measure and evaluate automatically the ignition voltage of the gas engine cylinders.
With the **aic** (**a**ctive **i**-**c**oil) the ignition voltages are measured by the monic hardware and the measured values are transmitted by CAN-Bus to the DIA.NE

- Visualisation of the spark voltages with bar chart display
- Evaluation of the measuring values with signalisation when exceeding

Thermostatically controlled 41W cabinet ventilator.

Dimensions:
height = 2000 mm
width = 1000 mm
depth = 600 mm

7.2 Module Interface Cabinet

All enclosed sheet steel cabinet with forward opening door (double doors as option), fitted with rubber profile seals. Fitted to module skid and wired to the module auxiliaries and engine.
Painted in RAL 7035

Protection class: IP54 external.

Power supply from the starter battery charger.
Power distribution to the module mounted auxiliaries: (Power input from the supplier of the auxiliaries power supply) .
3 x 480/277 V, 60 Hz, 35 Amp

comprising:

- terminal strip with cable entry from bottom
- decentral I/O system connected via an serial interface with the central engine control system in the module control cabinet.
- measurement transducer for generator exciter voltage.
- relays, protection, motor contactors for auxiliary and valve control.

Thermostatically controlled 41W cabinet ventilator.

Module interface cabinet dimensions:
width = 1000 mm
height = 1000 mm
depth = 300 mm

7.5 Generator Switchgear Cabinet

Nominal current: 2500 A

comprising:

1 motorised air C.B., IA = 50kA, 3-pole, fixed construction.
thermal and magnetic over current protection,
with 24 VDC shunt trip coil, 24VDC under voltage trip coil and 24VDC closing coil.
Suitable for synchronizing.

3 current transformers 2500/5 A, for measurement
1FS5, 30VA.

Fuses for different outgoing feeders

Thermostatically controlled 41W cabinet ventilator.

Cabinet dimensions:
width = 600 mm
height = 2000 mm
depth = 600 mm

8. Remote Data-Transfer with DIA.NE XT - HERMES

8.1 General

HERMES is the remote data transfer solution for DIA.NE XT. HERMES is available via two connection methods and applications.

8.2 Connections methods

8.2.1 Modem

Site-Customer connection via an analogue Modem.

Scope of supply

- DIA.NE WIN – Server (Industrial PC without display, keyboard or mouse, built into the control panel, including operating system)
- Internal analogue modem.

Customer Requirements

- Analogue modem in the customers PC
- Public telephone connection with connection port for the DIA.NE WIN – Server (in the control panel) including over-voltage protection corresponding to the local telecommunication regulations.
- Public telephone connection with connection port for the customer's PC corresponding to the local telecommunication regulations.

8.2.2 LAN

Site-Customer connection via a local network.

Scope of supply

- DIA.NE WIN – Server (Industrial PC without display, keyboard or mouse, built into the control panel, including operating system)
- Ethernet – Network card (10/100 BASE T)

Customer Requirements

- Ethernet – Network card (10/100 BASE T)
- Ethernet – Cabling between the DIA.NE WIN – Server the customers PC.

8.2.3 Internet (OPTION)

Site – Customer connection via secure Internet access

Scope of Supply

DIA.NE WIN – Server (Industrial PC without display, keyboard or mouse, built into the control panel, including operating system)
Ethernet–Network card (10/100 BASE T)
Firewall–Appliance with connection feasibility to a customer network with a maximum of 10 Hosts (Installation and service by GE Jenbacher; during warranty period included, afterwards as a service package with costs) (built into the control panel)
Feature – service package (access monitoring, clock synchronization for server)

Customer Requirements

Broad band Internet access with at least two official IP addresses.
Connection feasibility for the Firewall–Appliance to the Internet–Router via Ethernet
(RJ45 Connector, Network Address Translation (NAT) is not permitted) or USB type A Connector.

8.3 Applications

8.3.1 DIA.NE WIN (OPTION)

DIA.NE WIN is the Windows based „man-machine interface" for GE Jenbacher gas engines. The system offers extensive facilities for commissioning, monitoring, servicing and analysis of the site. The option DIA.NE WIN extends the visualisation of DIA.NE XT with respect to user friendliness, historical analysis and remote use. Several service stations can be independently operated in parallel. The system consists of a central PC (DIA.NE WIN – Server) which is built in to the control panel and one or more service stations (DIA.NE WIN – Clients). The system runs on a Microsoft Internet Explorer platform.

Function
Service and monitoring, trend analysis, alarm management, parameter management, long-term data analysis, multi-user system, remote control, OPC (OLE for process control), print and export functions, operating data protocols, available in several languages.

Scope of supply
Software package DIA.NE WIN on the DIA.NE WIN – Server
DIA.NE WIN – Client Licence (Right to access of the user to the server on site)

Customer requirements
- Standard PC with keyboard, mouse and monitor (min. resolution 1024*768)
- 277 V supply for the customers' PC
- Operating system Windows 98, Windows NT, Windows 2000 or Windows XP
- Microsoft Internet Explorer (min. Version 6.0) including Java support

8.3.2 DIA.NE RMC (OPTION)

DIA.NE RMC (Remote Message Control) is the automatic alarm system for DIA.NE XT. DIA.NE RMC can fully automatically transmit essential operational information from the DIA.NE XT Alarm Management to a remote station. The messages can be forwarded to an e-mail address, fax machine or mobile phone (SMS). Furthermore the stored messages can be visualised at the remote station. The system consists of a central PC (DIA.NE WIN – Server) which is built into the control panel and one or more customer remote stations.

Function
Automatic transfer of messages to the customer via email, fax or SMS. Display and printing of the messages (also distributed via LAN). Automatic and manual transferral of messages, trend data and operating data protocols.

Scope of supply
Software package DIA.NE message on the DIA.NE WIN – Server
Software package DIA.NE control and DIA.NE report on the remote station

Customer requirements
- Standard PC with keyboard, mouse and monitor (min. resolution 1024*768)
- 277 V supply for the customers' computer.
- Operating system Windows NT or Windows XP
- Internet connection (provider account) for the case that messages from the RMC should be

forwarded to an email receiver (incl. SMS for mobiles and pagers). (Mobiles and pagers to be provided by the customer).

- Customer fax software for message forwarding via fax

OPTION:

8.3.2.1 DIA.NE message

DIA.NE message is installed on the modem servers of the plants. It is responsible for the transmission of messages and data to **DIA.NE control** in the RDT control centers.

Message transmission:
The processing of alarm messages on the module visualization units is carried out by AMM (Alarm Management) from DIA.NE. AMM records operational messages, warnings and malfunctions leading to shutdowns (the latter two are also designated as alarm messages).

Prior to a transmission the messages generated by the modules are examined according to various criteria so that the message transmission can be influenced in a specific way. The following criteria can be set:

Module, Message designation, Message number, Message type, Weekday, Time of the occurrence

If a message is classified as "to be transmitted", it is then augmented with the plant code, plant number, module designation and the module number and transmitted to the configured RDT control centers.

Data transmission:
The HTM (Historical Trend Management) function records measured values cyclically on the **DIA.NE** visualization units and stores them in so-called log files.

OPTION:
With the RPM (Report Management) function reports (e.g. operational logbook) can be automatically generated which then are available as report files.

These files, which are stored in the modules, can be transferred manually or automatically to any desired RDT control centers.

OPTION:

8.3.2.2 DIA.NE control

In the RDT control centers **DIA.NE control** regulates the reception and archiving of all incoming messages and data. Additionally, the relaying of messages and reports via Fax and eMail (incl. SMS for cellular phones and pagers) is organized for communication with service personnel.

Messages which are received from the plants are examined according to various criteria prior to being relayed so that communication can be purposely influenced. The following criteria can be set:

Plant code, Plant number, Module, Message designation, Message number, Message type
Weekday, Time of the occurrence, Communication type (Fax, eMail, SMS)

For automatic protocolling, all recorded messages can be printed out daily. A connection check can be activated to examine the RDT link between the modem servers and the RDT control centers. This ensures that a check call is carried out on a daily basis.

OPTION:

8.3.2.3 DIA.NE report

With DIA.NE report one can display and print out messages received in an RDT control center on any number of workstations (standard PCs). To do this, the PC must be linked via a LAN to the RDT control center. For the message display one can select both the language and the desired plants.

For automatic protocoling all received messages can be printed out daily regarding specific plants. Through DIA.NE report it is also possible to print out manually compiled protocols at any time.

OPTION:

8.3.3 Remote demand/blocking with HERMES

If the service selector switch at the module control panel is in pos."automatic" and the demand-selector switch in pos."Remote", it is possible to enable (demanded) or disable (demand off) the module with a remote controllable key at the visualisation.

Note:

With this option it makes no sense to have an additional clients demand (via hardware or data bus) or a selfguidet operation (via GE Jenbacher master control, grid import /export etz.).

OPTION:

8.3.4 Remote - reset (see TA-Nr. 1100-0111 chapter 1.7)

8.4 Technical prerequisites

The customer has the responsibility to ensure that a telephone line with a separate number is available no later than the start-up of operations. The connection must be installed in the module control cabinet in which the modem server is installed. The telephone line must be operative and the number known. No charge (=tariff) impulses may be applied to the line since they could interfere with data transmission. For the telephone line on the customers side an over voltage protection has to be provided which corresponds with local rules and regulations of the telephone provider.

GE
Energy

Alarm List
STÖRMELDELISTE

1 x JGC 420 GS-L.LC
BUNCOMBE COUNTY LANDFILL
J J183

Index: -
Revisions reserved!
Vorbehaltlich techn. Änderungen!

© GE Jenbacher GmbH & Co OHG
Achenseestr. 1-3
A-6200 Jenbach (Austria)

		FAILURE MESSAGES MODULE CONTROL (TRIP) *STÖRMELDUNGEN MODULSTEUERSCHRANK MIT ABSTELLUNG*	Message No. *Meldungs-Nr.*	Index

FAILURE MESSAGES (ALARM MANAGEMENT)

Comments: **OPT** = OPTION

Only monitoring functions messages which are marked with a "X" are included.

CYLINDER xx = CYLINDER 1, 2, ...

CYLINDER xx/yy = CYLINDER 1/2, 3/4, ...

STÖRMELDUNGEN (ALARM MANAGEMENT)

Anmerkung: **OPT** = OPTION

Es sind nur die mit "X" bezeichneten Überwachungen vorhanden.

Zylinder xx = Zylinder 1, 2, ...

Zylinder xx/yy = Zylinder 1/2, 3/4, ...

OPT		RESERVE FAILURE 1 TRIP *Reservestörung 1 abstellend*	1001	
OPT		RESERVE FAILURE 2 TRIP *Reservestörung 2 abstellend*	1002	
OPT		RESERVE FAILURE 3 TRIP *Reservestörung 3 abstellend*	1003	
OPT		RESERVE FAILURE 4 TRIP *Reservestörung 4 abstellend*	1004	
OPT		RESERVE FAILURE 5 TRIP *Reservestörung 5 abstellend*	1005	
OPT		RESERVE FAILURE 6 TRIP *Reservestörung 6 abstellend*	1006	
OPT		RESERVE FAILURE 7 TRIP *Reservestörung 7 abstellend*	1007	
OPT		RESERVE FAILURE 8 TRIP *Reservestörung 8 abstellend*	1008	
OPT		RESERVE FAILURE 9 TRIP *Reservestörung 9 abstellend*	1009	
OPT		RESERVE FAILURE 10 TRIP *Reservestörung 10 abstellend*	1010	
OPT		RESERVE FAILURE 11 TRIP *Reservestörung 11 abstellend*	1011	
OPT		RESERVE FAILURE 12 TRIP *Reservestörung 12 abstellend*	1012	
OPT		RESERVE FAILURE 13 TRIP *Reservestörung 13 abstellend*	1013	
OPT		RESERVE FAILURE 14 TRIP *Reservestörung 14 abstellend*	1014	
OPT		RESERVE FAILURE 15 TRIP *Reservestörung 15 abstellend*	1015	
OPT		RESERVE FAILURE 16 TRIP *Reservestörung 16 abstellend*	1016	
	X	OIL PRESSURE LOW *Öldruck Minimum*	1017	

		FAILURE MESSAGES MODULE CONTROL (TRIP) *STÖRMELDUNGEN MODULSTEUERSCHRANK MIT ABSTELLUNG*	Message No. *Meldungs-Nr.*	Index
	X	ENGINE OIL LEVEL LOW *Ölstand Motor Minimum*	1018	
	X	JACKET WATER PRESSURE LOW *Kühlwasserdruck Minimum*	1019	
OPT		JACKET WATER LEVEL LOW *Kühlwasserstand Minimum*	1020	
	X	JACKET WATER TEMPERATURE HIGH *Kühlwassertemperatur Maximum*	1021	
OPT	X	OVERSPEED (RELAY) *Überdrehzahl (Relais)*	1022	
	X	START UP FAILURE *Anlaufstörung*	1023	
		RESERVE *Reserve*	1024	
		RESERVE *Reserve*	1025	
	X	SHUTDOWN FAILURE *Abstellstörung*	1026	
OPT	X	FAILURE GAS TRAIN 1 *Störung Gasstrecke 1*	1027	
	X	GAS PRESSURE LOW IN GAS TRAIN 1 *Gasdruck Minimum Gasstrecke 1*	1028	
OPT		FAILURE GAS TRAIN 2 *Störung Gasstrecke 2*	1029	
OPT		GAS PRESSURE LOW IN GAS TRAIN 2 *Gasdruck Minimum Gasstrecke 2*	1030	
	X	EMERGENCY STOP / SAFETY LOOP *Not-Halt / Sicherheitsschleife*	1031	
OPT		HEATING WATER FLOW LOW *Heizwasserdurchfluss Minimum*	1032	
OPT		HEATING WATER TEMPERATURE HIGH *Heizwassertemperatur Maximum*	1033	
OPT		HEATING WATER PRESSURE LOW *Heizwasserdruck Minimum*	1034	
OPT		HEATING WATER PRESSURE HIGH *Heizwasserdruck Maximum*	1035	
	X	GENERATOR OVERLOAD/SHORT CIRCUIT *Generator Überlast/Kurzschluss*	1036	
OPT		GENERATOR WINDING TEMPERATURE HIGH *Generatorwicklungstemperatur Maximum*	1037	
	X	GENERATOR REVERSE POWER *Generator Rückleistung*	1038	
	X	SYNCHRONIZING FAILURE *Synchronisierstörung*	1039	
	X	FUEL MIXTURE TEMPERATURE HIGH *Gemischtemperatur Maximum*	1040	

		FAILURE MESSAGES MODULE CONTROL (TRIP) *STÖRMELDUNGEN MODULSTEUERSCHRANK MIT ABSTELLUNG*	Message No. *Meldungs-Nr.*	Index
	X	POWER SIGNAL MISSING *Leistungssignal ausgefallen*	1041	
	X	POWER SIGNAL OVERLOAD *Leistungssignal Überlast*	1042	
	X	ENGINE OIL TEMPERATURE HIGH *Öltemperatur Maximum*	1043	
OPT	X	CYLINDER EXHAUST GAS TEMPERATURE DEVIATION FROM AVERAGE VALUE *Abgastemperatur Zylinder Abweichung vom Mittelwert*	1044	
OPT		CATALYST TEMPERATURE HIGH *Katalysatortemperatur Maximum*	1045	
		RESERVE *Reserve*	1046	
OPT	X	MISFIRING FAILURE *Aussetzerstörung*	1047	
OPT		KNOCKING FAILURE *Klopfstörung*	1048	
OPT		CYLINDER EXHAUST GAS TEMPERATURE ABSOLUTE VALUE HIGH *Abgastemperatur Zylinder Maximum Überschreitung Absolutwert*	1049	
	X	JACKET WATER PRESSURE HIGH *Kühlwasserdruck Maximum*	1050	
	X	ENGINE OIL LEVEL HIGH *Ölstand Motor Maximum*	1051	
	X	GAS PRE-ALARM *Gasvoralarm*	1052	
	X	GAS ALARM *Gasalarm*	1053	
	X	FIRE ALARM *Brandalarm*	1054	
		RESERVE *Reserve*	1055	
	X	FAIL SAFE LOOP TRIPPED *Ruhestromschleife unterbrochen*	1056	
OPT		HIGH GAS PRESSURE IN GAS TRAIN 1 *Gasdruck Maximum Gasstrecke 1*	1057	
OPT		HIGH GAS PRESSURE IN GAS TRAIN 2 *Gasdruck Maximum Gasstrecke 2*	1058	
OPT		OIL FILTER DIFFERENTIAL PRESSURE HIGH *Ölfilterdifferenzdruck Maximum*	1059	
OPT	X	PRE-LUBE PRESSURE LOW *Vorschmierdruck Minimum*	1060	
OPT		IGNITION SYSTEM FAILURE *Zündung gestört*	1061	
		RESERVE *Reserve*	1062	
OPT		HEATING WATER SUPPLY TEMPERATURE HIGH *Vorlauftemperatur Maximum*	1063	

		FAILURE MESSAGES MODULE CONTROL (TRIP) *STÖRMELDUNGEN MODULSTEUERSCHRANK MIT ABSTELLUNG*	Message No. *Meldungs-Nr.*	Index
	X	OVERSPEED (RPS-CONTROL SYSTEM) *Überdrehzahl (RPS)*	1064	
		RESERVE *Reserve*	1065	
		RESERVE *Reserve*	1066	
		RESERVE *Reserve*	1067	
		RESERVE *Reserve*	1068	
		RESERVE *Reserve*	1069	
OPT		HEATING WATER RETURN TEMPERATURE MEASURING SIGNAL FAILURE *Messsignalstörung Rücklauftemperatur*	1070	
OPT		HEATING WATER SUPPLY TEMPERAUTRE MEASURING SIGNAL FAILURE *Messsignalstörung Vorlauftemperatur*	1071	
		RESERVE *Reserve*	1072	
	X	MULTI MEASUREMENT DEVICE: GENERATOR OVERLOAD/SHORT CIRCUIT *Multimessumformer: Generator Überlast/Kurzschluss*	1073	
		RESERVE *Reserve*	1074	
		RESERVE *Reserve*	1075	
		RESERVE *Reserve*	1076	
OPT		BOOST PRESSURE BEFORE THROTTLE VALVE MEASURING SIGNAL FAILURE *Messsignalstörung Ladedruck vor Drosselklappe*	1077	
	X	BOOST PRESSURE MEASURING SIGNAL FAILURE *Messsignalstörung Ladedruckgeber*	1078	
		RESERVE *Reserve*	1079	
	X	LEANOX CONTROL ALLOWED DEVIATION EXCEEDED *Leanoxregler zulässige Regeldifferenz überschritten*	1080	
OPT		KNOCK SENSOR MEASURING SIGNAL FAILURE *Messsignalstörung Klopfsensor*	1081	
		RESERVE *Reserve*	1082	
OPT	X	CONTROL CARBURATOR DEFECTIVE *Ansteuerung Gasmischer defekt*	1083	
OPT		PRE CHAMBER GAS PRESSURE MEASURING SIGNAL FAILURE *Messsignalstörung Vorkammergasdruck*	1084	
OPT		PRE CHAMBER GAS PRESSURE HIGH *Vorkammergasdruck Maximum*	1085	
OPT		CH4 CONTENT LOW *CH4-Gehalt Minimum*	1086	

		FAILURE MESSAGES MODULE CONTROL (TRIP) *STÖRMELDUNGEN MODULSTEUERSCHRANK MIT ABSTELLUNG*	Message No. *Meldungs-Nr.*	Index
OPT		O2 CONTENT HIGH *O2-Gehalt Maximum*	1087	
OPT		O2 CONTENT MEASURING SIGNAL FAILURE *Messsignalstörung O2-Gehalt*	1088	
		RESERVE *Reserve*	1089	
OPT	X	MALFUNCTION OF ENGINE COOLING WATER PUMP *Störung Motorkühlwasserpumpe*	1090	
		RESERVE *Reserve*	1091	
OPT		SCAVENGING FLAP FAILURE *Störung Spülluftklappe*	1092	
		RESERVE *Reserve*	1093	
OPT		DEFLAGRATION PROTECTION *Verpuffungsschutz*	1094	
OPT		PRE CHAMBER GAS PRESSURE LOW *Vorkammergasdruck Minimum*	1095	
		RESERVE *Reserve*	1096	
		RESERVE *Reserve*	1097	
		RESERVE *Reserve*	1098	
OPT		COMMS FAILURE WITH PLANT MANAGEMENT SYSTEM *Ausfall Kommunikation mit zentraler Leittechnik*	1099	
		RESERVE *Reserve*	1100	
OPT		TRANSFORMER FAILURE *Störung Transformator*	1101	
		RESERVE *Reserve*	1102	
		RESERVE *Reserve*	1103	
OPT		PLATE TEMPERATURE EXHAUST GAS HEAT EXCHANGER HIGH *Rohrplattentemperatur Maximum*	1104	
	X	SPEED OF TEMPERATURE CHANGE MIXTURE TEMPERATURE MAXIMUM *Änderungsgeschwindigkeit Gemischtemperatur Maximum*	1105	
		RESERVE *Reserve*	1106	
		RESERVE *Reserve*	1107	
		RESERVE *Reserve*	1108	
	X	GENERATOR LOSS OF EXCITATION *Generator Erregerausfall*	1109	

		FAILURE MESSAGES MODULE CONTROL (TRIP) *STÖRMELDUNGEN MODULSTEUERSCHRANK MIT ABSTELLUNG*	Message No. *Meldungs-Nr.*	Index
	X	GENERATOR FREQUENCY TOO LOW *Generatorfrequenz zu nieder*	1110	
	X	GENERATOR FREQUENCY TOO HIGH *Generatorfrequenz zu hoch*	1111	
	X	NEUTRAL CURRENT MAXIMUM *Nulleiterstrom Maximum*	1112	
	X	GENERATOR POWER MEASURING SIGNAL FAILURE *Messsignalstörung Istleistung*	1113	
	X	FUEL MIXTURE TEMPERATURE MEASURING SIGNAL FAILURE *Messsignalstörung Gemischtemperatur*	1114	
		RESERVE *Reserve*	1115	
		RESERVE *Reserve*	1116	
		RESERVE *Reserve*	1117	
		RESERVE *Reserve*	1118	
		RESERVE *Reserve*	1119	
	X	SPEED MEASURING SIGNAL FAILURE *Messsignalstörung Drehzahlmessung*	1120	
OPT	X	GENERATOR WINDING (L1) TEMPERATURE HIGH *Generatorwicklungstemperatur L1 Maximum*	1121	
OPT	X	GENERATOR WINDING (L2) TEMPERATURE HIGH *Generatorwicklungstemperatur L2 Maximum*	1122	
OPT	X	GENERATOR WINDING (L3) TEMPERATURE HIGH *Generatorwicklungstemperatur L3 Maximum*	1123	
OPT	X	GENERATOR BEARING (A) TEMPERATURE HIGH *Generatorlagertemperatur A Maximum*	1124	
OPT	X	GENERATOR BEARING (B) TEMPERATURE HIGH *Generatorlagertemperatur B Maximum*	1125	
	X	GENERATOR VOLTAGE LOW *Generatorspannung zu nieder*	1126	
	X	GENERATOR VOLTAGE HIGH *Generatorspannung zu hoch*	1127	
OPT		FLAME ARRESTORS *Flammrückschlagsicherung*	1128	
	X	FAILURE AUXILIARIES *Störung Hilfsbetriebe*	1129	
		RESERVE *Reserve*	1130	
		RESERVE *Reserve*	1131	
OPT	X	DIFFERENTIAL PROTECTION *Differentialschutz*	1132	

		FAILURE MESSAGES MODULE CONTROL (TRIP) *STÖRMELDUNGEN MODULSTEUERSCHRANK MIT ABSTELLUNG*	Message No. *Meldungs-Nr.*	Index
		RESERVE *Reserve*	1133	
OPT		GROUND FAILURE *Erdschluss*	1134	
OPT		ROOM TEMPERATURE HIGH *Raumtemperatur Maximum*	1135	
		RESERVE *Reserve*	1136	
OPT		MAINS STARTING DEVICE FAILURE *Störung Netzstartgerät*	1137	
		RESERVE *Reserve*	1138	
		RESERVE *Reserve*	1139	
OPT	X	MODULE INTERFACE PANEL CIRCUIT BREAKER TRIPPED *Sicherungsfall Modulinterfaceschrank*	1140	
		RESERVE *Reserve*	1141	
		RESERVE *Reserve*	1142	
	X	VOLTAGE NEGATIVE SEQUENCE *Spannungsasymmetrie*	1143	
	X	CURRENT NEGATIVE SEQUENCE *Stromasymmetrie*	1144	
		RESERVE *Reserve*	2001 : 2060	
OPT		KLS98 FAILURE *KLS98 Störung*	3001	
OPT		KLS98 WRONG TYPE OF SOFTWARE *KLS98 falsche Software*	3002	
	X	MEASURING SIGNAL FAILURE *Messsignalstörung (2101 | 2102 | 2103 | 2104 | 3152 > 24h)*	3003	
OPT		PRE CHAMBER DIFFERENTIAL PRESSURE LOW *Vorkammerdifferenzdruck Minimum*	3004	
		RESERVE *Reserve*	3005 : 3024	
OPT		IGNITION TRIGGER PICKUP MISSING *Zündung Ausfall Trigger Pickup*	3025	
OPT		IGNITION RESET PICKUP MISSING *Zündung Ausfall Reset Pickup*	3026	
OPT		IGNITION CAM PICKUP MISSING *Zündung Ausfall CAM Pickup*	3027	
OPT		IGNITION SHUTOFF OVERSPEED *Zündung Überdrehzahlabstellung*	3028	

		FAILURE MESSAGES MODULE CONTROL (TRIP) *STÖRMELDUNGEN MODULSTEUERSCHRANK MIT ABSTELLUNG*	Message No. *Meldungs-Nr.*	Index
OPT		IGNITION CPU FAILURE *Zündung CPU Fehler*	3029	
OPT		IGNITION PARAMETER FAILURE *Zündung Parameter Fehler*	3030	
OPT		IGNITION CAN COMMUNICATION FAILURE *Zündung CAN Kopplung gestört*	3031	
		RESERVE *Reserve*	3032 : 3051	
OPT		WRONG TYPE OF IGNITION SYSTEM *Falsches Zündsystem*	3052	
OPT		KLS98 VALVE NOISE CYLINDER xx HIGH *KLS98 Ventilgeräusch Zylinder xx Maximum*	3053 : 3072	
OPT		KNOCKING FAILURE CYLINDER xx *Klopfstörung Zylinder xx*	3073 : 3092	
OPT		GAS PROPORTIONING VALVE CAN COMMUNICATION FAILURE *Gasdosierventil CAN Kopplung gestört*	3093	
OPT		GAS PROPORTIONING VALVE WRONG SOFTWARE *Gasdosierventil falsche Software*	3094	
OPT		GAS PROPORTIONING VALVE FUEL GAS TEMPERATURE OUT OF LIMITS *Gasdosierventil Gastemperatur nicht erfüllt*	3095	
OPT		GAS PROPORTIONING VALVE FUEL GAS PRE-PRESSURE OUT OF LIMITS *Gasdosierventil Gasvordruck nicht erfüllt*	3096	
OPT		GAS PROPORTIONING VALVE INTERNAL FAILURE *Gasdosierventil interner Fehler*	3097	
OPT		GAS PROPORTIONING VALVE MECHANICAL MALFUNCTION *Gasdosierventil mechanische Fehlfunktion*	3098	
OPT		STEP OF FUEL GAS VOLUME TOO HIGH *Gasmengensprung*	3099	
OPT		EXHAUST GAS TEMPERATURE BEFORE TURBOCHARGER HIGH *Abgastemperatur vor Turbolader Maximum*	3100	
		RESERVE *Reserve*	3301	
		RESERVE *Reserve*	3302	
		RESERVE *Reserve*	3303	
OPT		OIL PRESSURE MINIMUM TRANSMISSION *Öldruck Minimum Getriebe*	3304	
OPT		OIL TEMPERATURE MAXIMUM TRANSMISSION *Öltemperatur Maximum Getriebe*	3305	
OPT		THERMAL REACTOR: EXHAUST GAS VALVE FAILURE, MIDDLE POSITION *Thermoreaktor: Störung Abgasklappe Mittelstellung*	3306	

		FAILURE MESSAGES MODULE CONTROL (TRIP) *STÖRMELDUNGEN MODULSTEUERSCHRANK MIT ABSTELLUNG*	Message No. *Meldungs-Nr.*	Index
OPT		SAFETY LOOP THERMAL REACTOR *Sicherheitsschleife Thermoreaktor*	3307	
OPT		PRESSURE OF PRE CHAMBER GAS COMPRESSOR MEASURING SIGNAL FAILURE *Messsignalstörung Druck Vorkammergasverdichter*	3308	
OPT		PRESSURE OF PRE CHAMBER GAS COMPRESSOR HIGH *Druck Vorkammergasverdichter Maximum*	3309	
OPT		IGNITION OUTPUT MONITORING CYLINDER *Zündung Ausgangsüberwachung Zylinder*	3310	
	X	IN/OUT CHANNEL FAILURE *Fehler In/Out Kanäle*	3311	
OPT		HEATING WATER RETURN TEMPERATURE AFTER COOLER MEASURING SIGNAL FAILURE *Messsignalstörung Rücklauftemperatur nach Kühler*	3312	
OPT		CO2 REACTOR TEMPERATURE HIGH *CO2 Reaktortemperatur Maximum*	3313	
OPT		FAILURE CO2 FLAP *Störung CO2 Klappe*	3314	
OPT		PRE CHAMBER GAS COMPRESSOR OIL LEVEL LOW *Ölstand Vorkammergasverdichter Minimum*	3315	
OPT		GAS COMPRESSOR FAILURE *Störung Gasverdichter*	3316	
OPT		GAS TEMPERATURE HIGH *Gastemperatur Maximum*	3317	
OPT		GAS PRESSURE LOW BEFORE GAS COMPRESSOR *Gasdruck Minimum vor Gasverdichter*	3318	
OPT		GENERATOR PROTECTION TRIP *Generatorschutz ausgelöst*	3319	
OPT		PRESSURE OF PRE CHAMBER GAS TRAIN MEASURING SIGNAL FAILURE *Messsignalstörung Druck Vorkammergasstrecke*	3320	
OPT		HEATING WATER RETURN TEMPERATURE BEFORE ENGINE MEASURING SIGNAL FAILURE *Messsignalstörung Rücklauftemperatur vor Motor*	3321	
OPT		CRANK CASE PRESSURE HIGH *Kurbelgehäusedruck maximum*	3322	
OPT		CRANK CASE PRESSURE MEASURING SIGNAL FAILURE *Messsignalstörung Kurbelgehäusedruck*	3323	
OPT		FAILURE PRE CHAMBER GAS COMPRESSOR *Störung Vorkammergasverdichter*	3324	
		RESERVE *Reserve*	3325	
		RESERVE *Reserve*	3326	
		RESERVE *Reserve*	3327	
		RESERVE *Reserve*	3328	

		FAILURE MESSAGES MODULE CONTROL (TRIP) *STÖRMELDUNGEN MODULSTEUERSCHRANK MIT ABSTELLUNG*	Message No. *Meldungs-Nr.*	Index
		RESERVE *Reserve*	3329	
OPT	X	SAFI HARDWARE FAILURE *SAFI Hardwarefehler*	3330	
OPT	X	SAFI CAN COMMUNICATION FAILURE *SAFI CAN Kommunikation gestört*	3331	
OPT	X	SAFI WRONG TYPE OF SOFTWARE *SAFI falsche Software*	3332	
OPT	X	SAFI PARAMETER FAILURE *SAFI Parameter Fehler*	3333	
OPT		IGNITION POINT DEVIATION TOO HIGH *Zündzeitpunktabweichung zu groß*	3334	
OPT	X	SAFI SHUTOFF OVERSPEED *SAFI Überdrehzahlabstellung*	3335	
OPT	X	SAFI TRIGGER PICKUP MISSING *SAFI Ausfall Trigger Pickup*	3336	
OPT	X	SAFI CAMSHAFT/RESET PICKUP MISSING *SAFI Ausfall Nockenwellen/Reset Pickup*	3337	
OPT		IGNITION OUTPUT FAILURE *Zündung Ausgangsfehler*	3338	
OPT	X	KNOCKING FAILURE *Klopfstörung*	3339	
OPT		MISFIRING FAILURE *Aussetzerstörung*	3340	
OPT	X	VALVE NOISE HIGH *Ventilgeräusch Maximum*	3341	
OPT	X	KNOCK SENSOR MEASURING SIGNAL FAILURE *Messsignalstörung Klopfsensor*	3342	
OPT	X	IGNITION HARDWARE FAILURE *Zündung Hardwarefehler*	3343	
OPT	X	IGNITION POWER SUPPLY FAILURE *Zündung Spannungsversorgung gestört*	3344	
OPT	X	IGNITION SAFETY LOOP *Zündung Sicherheitsschleife*	3345	
		RESERVE *Reserve*	3346	
		RESERVE *Reserve*	3347	
		RESERVE *Reserve*	3348	
		RESERVE *Reserve*	3349	
		RESERVE *Reserve*	3350	
		RESERVE *Reserve*	3351	

		FAILURE MESSAGES MODULE CONTROL (TRIP) *STÖRMELDUNGEN MODULSTEUERSCHRANK MIT ABSTELLUNG*	Message No. *Meldungs-Nr.*	Index
		RESERVE *Reserve*	3352	
		RESERVE *Reserve*	3353	
		RESERVE *Reserve*	3354	
		RESERVE *Reserve*	3355	
		RESERVE *Reserve*	3356	
		RESERVE *Reserve*	3357	
		RESERVE *Reserve*	3358	
		RESERVE *Reserve*	3359	
		RESERVE *Reserve*	3360	
		RESERVE *Reserve*	3361 : 3396	

		FAILURE MESSAGES MODULE CONTROL (WARNING) *STÖRMELDUNGEN MODULSTEUERSCHRANK WARNEND*	Message No. *Meldungs-Nr.*	Index
	X	JACKET WATER TEMPERATURE LOW *Kühlwassertemperatur Minimum*	1145	
		RESERVE *Reserve*	1146	
OPT		COMMS FAILURE WITH PLANT MANAGEMENT SYSTEM *Ausfall Kommunikation mit zentraler Leittechnik*	1147	
	X	STARTER BATTERY VOLTAGE LOW *Starterbatteriespannung Minimum*	1148	
		RESERVE *Reserve*	1149	
OPT	X	FAILURE SERIAL INTERFACE MODULE *Fehlermeldung von serieller Schnittstellenbaugruppe*	1150	
OPT		DATA FLOW ERROR SERIAL INTERFACE MODULE *Unterbrechung Datenverkehr mit serieller Schnittstellenbaugruppe*	1151	
		RESERVE *Reserve*	1152	
OPT		CYLINDER EXHAUST GAS TEMPERATURE MEASURING SIGNAL FAILURE *Messsignalstörung Abgastemperatur*	1153	
OPT	X	GENERATOR WINDING (L1) TEMPERATURE HIGH *Generatorwicklungstemperatur L1 Maximum*	1154	
OPT	X	GENERATOR WINDING (L2) TEMPERATURE HIGH *Generatorwicklungstemperatur L2 Maximum*	1155	
OPT	X	GENERATOR WINDING (L3) TEMPERATURE HIGH *Generatorwicklungstemperatur L3 Maximum*	1156	
OPT	X	GENERATOR BEARING (A) TEMPERATURE HIGH *Generatorlagertemperatur A Maximum*	1157	
OPT	X	GENERATOR BEARING (B) TEMPERATURE HIGH *Generatorlagertemperatur B Maximum*	1158	
OPT		FRESH OIL TANK LEVEL LOW *Frischöltank Minimum*	1159	
OPT		WASTE OIL TANK LEVEL HIGH *Altöltank Maximum*	1160	
OPT		TEMPERATURE BEFORE CATALYST MEASURING SIGNAL FAILURE *Messsignalstörung Temperatur vor Katalysator*	1161	
OPT		TEMPERATURE AFTER CATALYST MEASURING SIGNAL FAILURE *Messsignalstörung Temperatur nach Katalysator*	1162	
OPT	X	EXHAUST GAS TEMPERATURE AFTER TURBOCHARGER MEASURING SIGNAL FAILURE *Messsignalstörung Abgastemperatur nach Turbolader*	1163	
OPT	X	EXHAUST GAS TEMPERATURE AFTER EXHAUST HEAT EXCHANGER MEASURING SIGNAL FAILURE *Messsignalstörung Abgastemperatur nach Abgaswärmetauscher*	1164	
OPT		SCAVENGING FAN FAILURE *Störung Spülluftventilator*	1165	

		FAILURE MESSAGES MODULE CONTROL (WARNING) *STÖRMELDUNGEN MODULSTEUERSCHRANK WARNEND*	Message No. *Meldungs-Nr.*	Index
OPT		OIL SUPPLY FAILURE *Störung Ölversorgung*	1166	
OPT		HEATING WATER RETURN TEMPERATURE HIGH *Rücklauftemperatur Maximum*	1167	
	X	REQUEST FOR MAINTENANCE *Wartungsanforderung*	1168	
OPT		TEMPERATURE BEFORE CATALYST HIGH *Temperatur vor Katalysator Maximum*	1169	
OPT		TEMPERATURE AFTER CATALYST HIGH *Temperatur nach Katalysator Maximum*	1170	
OPT	X	EXHAUST GAS TEMPERATURE AFTER TURBOCHARGER HIGH *Abgastemperatur nach Turbolader Maximum*	1171	
OPT	X	EXHAUST GAS TEMPERATURE AFTER EXHAUST HEAT EXCHANGER HIGH *Abgastemperatur nach Abgaswärmetauscher Maximum*	1172	
OPT		HEAT EXCHANGER PLATE TEMPERATURE HIGH *Rohrplattentemperatur Maximum*	1173	
OPT		CATALYST TEMPERATURE HIGH *Katalysatortemperatur Maximum*	1174	
OPT	X	MAINS FAILURE *Netzstörung*	1175	
OPT		AIR INLET FILTER DIFFERENTIAL PRESSURE HIGH *Zuluftfilterdifferenzdruck Maximum*	1176	
OPT		RESERVE 1 - ANALOGUE MEASURING SIGNAL FAILURE *Messsignalstörung Reserveanalogwert 1*	1177	
OPT		RESERVE 2 - ANALOGUE MEASURING SIGNAL FAILURE *Messsignalstörung Reserveanalogwert 2*	1178	
OPT		RESERVE 3 - ANALOGUE MEASURING SIGNAL FAILURE *Messsignalstörung Reserveanalogwert 3*	1179	
OPT		RESERVE 4 - ANALOGUE MEASURING SIGNAL FAILURE *Messsignalstörung Reserveanalogwert 4*	1180	
OPT		RESERVE 5 - ANALOGUE MEASURING SIGNAL FAILURE *Messsignalstörung Reserveanalogwert 5*	1181	
OPT		RESERVE 6 - ANALOGUE MEASURING SIGNAL FAILURE *Messsignalstörung Reserveanalogwert 6*	1182	
OPT		RESERVE 7 - ANALOGUE MEASURING SIGNAL FAILURE *Messsignalstörung Reserveanalogwert 7*	1183	
OPT		RESERVE 8 - ANALOGUE MEASURING SIGNAL FAILURE *Messsignalstörung Reserveanalogwert 8*	1184	
OPT		GENERATOR WINDING TEMPERATURE HIGH *Generatorwicklungstemperatur Maximum*	1185	
OPT		HEATING WATER RETURN TEMPERATURE MEASURING SIGNAL FAILURE *Messsignalstörung Rücklauftemperatur*	1186	
OPT		HEATING WATER SUPPLY TEMPERATURE MEASURING SIGNAL FAILURE *Messsignalstörung Vorlauftemperatur*	1187	
OPT		RELEASE FROM PLANT MANAGEMENT SYSTEM MISSING *Freigabe aus zentraler Leittechnik fehlt*	1188	

		FAILURE MESSAGES MODULE CONTROL (WARNING) *STÖRMELDUNGEN MODULSTEUERSCHRANK WARNEND*	Message No. *Meldungs-Nr.*	Index
	X	RELEASE FROM SYNCHRONIZING MISSING *Freigabe aus Synchronisierung fehlt*	1189	
		RESERVE *Reserve*	1190	
		RESERVE *Reserve*	1191	
OPT	X	ACTUATOR FAILURE *Störung Actuator*	1192	
OPT		RESERVE FAILURE 1 WARNING *Reservestörung 1 warnend*	1193	
OPT		RESERVE FAILURE 2 WARNING *Reservestörung 2 warnend*	1194	
OPT		RESERVE FAILURE 3 WARNING *Reservestörung 3 warnend*	1195	
OPT		RESERVE FAILURE 4 WARNING *Reservestörung 4 warnend*	1196	
OPT		RESERVE FAILURE 5 WARNING *Reservestörung 5 warnend*	1197	
OPT		RESERVE FAILURE 6 WARNING *Reservestörung 6 warnend*	1198	
OPT		RESERVE FAILURE 7 WARNING *Reservestörung 7 warnend*	1199	
OPT		RESERVE FAILURE 8 WARNING *Reservestörung 8 warnend*	1200	
OPT		RESERVE FAILURE 9 WARNING *Reservestörung 9 warnend*	1201	
OPT		RESERVE FAILURE 10 WARNING *Reservestörung 10 warnend*	1202	
OPT		RESERVE FAILURE 11 WARNING *Reservestörung 11 warnend*	1203	
OPT		RESERVE FAILURE 12 WARNING *Reservestörung 12 warnend*	1204	
OPT		RESERVE FAILURE 13 WARNING *Reservestörung 13 warnend*	1205	
OPT		RESERVE FAILURE 14 WARNING *Reservestörung 14 warnend*	1206	
OPT		RESERVE FAILURE 15 WARNING *Reservestörung 15 warnend*	1207	
OPT		RESERVE FAILURE 16 WARNING *Reservestörung 16 warnend*	1208	
OPT		MAINS CB STATUS SIGNAL FAILURE *Netzschalter Stellungsrückmeldung gestört*	1209	
OPT		MAINS CB OPENING FAILURE *Netzschalter Ausschaltstörung*	1210	
OPT		MAINS CB CLOSING FAILURE *Netzschalter Einschaltstörung*	1211	

		FAILURE MESSAGES MODULE CONTROL (WARNING) *STÖRMELDUNGEN MODULSTEUERSCHRANK WARNEND*	Message No. *Meldungs-Nr.*	Index
OPT		MAINS CB O-SIGNAL FAILURE *Störung 0-Signal Netzschalter*	1212	
OPT		MAINS CB 1-SIGNAL FAILURE *Störung 1-Signal Netzschalter*	1213	
OPT		MAINS CB OVERLOAD/SHORT CIRCUIT *Netzschalter Überlast/Kurzschluss*	1214	
		RESERVE *Reserve*	1215	
	X	BUS BAR VOLTAGE SENSOR FAILURE *Sammelschienenspannungswächter gestört*	1216	
	X	GENERATOR CB STATUS SIGNAL FAILURE *Generatorschalter Stellungsrückmeldung gestört*	1217	
	X	GENERATOR CB OPENING FAILURE *Generatorschalter Ausschaltstörung*	1218	
	X	GENERATOR CB CLOSING FAILURE *Generatorschalter Einschaltstörung*	1219	
	X	GENERATOR CB O-SIGNAL FAILURE *Störung 0-Signal Generatorschalter*	1220	
	X	GENERATOR CB 1-SIGNAL FAILURE *Störung 1-Signal Generatorschalter*	1221	
OPT		GENERATOR MANUAL-CB OPEN *Generatorschutzschalter Aus*	1222	
		RESERVE *Reserve*	1223	
		RESERVE *Reserve*	1224	
OPT		CYLINDER xx EXHAUST GAS TEMPERATURE MEASURING SIGNAL FAILURE (GENERAL MESSAGE SEE No. 1153) *Messsignalstörung Abgastemperatur Zylinder xx* *(Sammelmeldung siehe Nr. 1153)*	2061 : 2080	
		RESERVE *Reserve*	2081	
	X	PARAMETER MISSING *Parameter fehlen*	2082	
	X	RPS (CONTROL SYSTEM) BATTERY FAILURE *RPS (Regler) - Batterieausfall*	2083	
	X	LEANOX ALGORITHM FAILURE *Fehler bei der LOX - Geradenberechnung*	2084	
		RESERVE *Reserve*	2085	
OPT	X	GASMIXER POSITION MEASURING SIGNAL FAILURE *Messsignalstörung Gasmischerposition*	2086	
OPT		RESERVE FAILURE 17 WARNING *Reservestörung 17 warnend*	2087	
OPT		RESERVE FAILURE 18 WARNING *Reservestörung 18 warnend*	2088	

		FAILURE MESSAGES MODULE CONTROL (WARNING) *STÖRMELDUNGEN MODULSTEUERSCHRANK WARNEND*	Message No. *Meldungs-Nr.*	Index
OPT		RESERVE FAILURE 19 WARNING *Reservestörung 19 warnend*	2089	
OPT		RESERVE FAILURE 20 WARNING *Reservestörung 20 warnend*	2090	
OPT		RESERVE FAILURE 21 WARNING *Reservestörung 21 warnend*	2091	
OPT		RESERVE FAILURE 22 WARNING *Reservestörung 22 warnend*	2092	
OPT		RESERVE FAILURE 23 WARNING *Reservestörung 23 warnend*	2093	
OPT		RESERVE FAILURE 24 WARNING *Reservestörung 24 warnend*	2094	
OPT		RESERVE FAILURE 25 WARNING *Reservestörung 25 warnend*	2095	
OPT		RESERVE FAILURE 26 WARNING *Reservestörung 26 warnend*	2096	
	X	DEVIATION POWER SETPOINT TO POWER PRESENT VALUE MAXIMUM *Leistungsistwertabweichung Maximum*	2097	
OPT		EXHAUST GAS VALVE FAILURE *Störung Abgasklappe*	2098	
		RESERVE *Reserve*	2099	
OPT		DIFFERENTIAL PROTECTION RELAY FAILURE *Störung Differentialschutzgerät*	2100	
	X	JACKET WATER TEMPERATURE MEASURING SIGNAL FAILURE *Messsignalstörung Kühlwassertemperatur*	2101	
	X	ENGINE OIL TEMPERATURE MEASURING SIGNAL FAILURE *Messsignalstörung Öltemperatur*	2102	
	X	ENGINE OIL PRESSURE MEASURING SIGNAL FAILURE *Messsignalstörung Öldruck*	2103	
	X	JACKET WATER PRESSURE MEASURING SIGNAL FAILURE *Messsignalstörung Kühlwasserdruck*	2104	
OPT		GENERATOR WINDING TEMPERATURE MEASURING SIGNAL FAILURE *Messsignalstörung Generatorwicklungstemperatur*	2105	
OPT	X	GENERATOR WINDING TEMPERATURE L1 MEASURING SIGNAL FAILURE *Messsignalstörung Generatorwicklungstemperatur L1*	2106	
OPT	X	GENERATOR WINDING TEMPERATURE L2 MEASURING SIGNAL FAILURE *Messsignalstörung Generatorwicklungstemperatur L2*	2107	
OPT	X	GENERATOR WINDING TEMPERATURE L3 MEASURING SIGNAL FAILURE *Messsignalstörung Generatorwicklungstemperatur L3*	2108	
OPT	X	GENERATOR BEARING (A) TEMPERATURE MEASURING SIGNAL FAILURE *Messsignalstörung Generatorlagertemperatur A*	2109	
OPT	X	GENERATOR BEARING (B) TEMPERATURE MEASURING SIGNAL FAILURE *Messsignalstörung Generatorlagertemperatur B*	2110	
OPT		KNOCK SENSOR MEASURING SIGNAL FAILURE *Messsignalstörung Klopfsensor*	2111	

		FAILURE MESSAGES MODULE CONTROL (WARNING) *STÖRMELDUNGEN MODULSTEUERSCHRANK WARNEND*	Message No. *Meldungs-Nr.*	Index
OPT		CATALYST TEMPERATURE MEASURING SIGNAL FAILURE *Messsignalstörung Katalysatortemperatur*	2112	
OPT		PLATE TEMPERATURE EXHAUST GAS HEAT EXCHANGER MEASURING SIGNAL FAILURE *Messsignalstörung Rohrplattentemperatur*	2113	
OPT		PREHEATING PUMP FAILURE *Störung Vorwärmpumpe*	2114	
OPT		GENERATOR VOLTAGE REGULATOR FAILURE *Störung Generatorspannungsregler*	2115	
OPT	X	DUMP RADIATOR FAILURE *Störung Kühler*	2116	
OPT	X	INTERCOOLER WATER PRESSURE LOW *Gemischkühlwasserdruck Minimum*	2117	
OPT	X	MALFUNCTION OF MIXTURE COOLING WATER PUMP *Störung Gemischkühlwasserpumpe*	2118	
OPT		FUEL MIXTURE COOLER FAILURE *Störung Gemischkühler*	2119	
OPT	X	ENGINE ROOM VENTILATION FAILURE *Störung Raumluftventilatoren*	2120	
		RESERVE *Reserve*	3101 : 3120	
OPT		KLS98 CAM PICKUP MISSING CYLINDER xx/yy *KLS98 Ausfall CAM Pickup Zylinder xx/yy*	3121 : 3130	
OPT		KLS98 CAN COMMUNICATION FAILURE CYLINDER xx/yy *KLS98 CAN Kopplung Zylinder xx/yy gestört*	3131 : 3140	
OPT		KLS98 TRIGGER PICKUP MISSING CYLINDER xx/yy *KLS98 Ausfall Trigger Pickup Zylinder xx/yy*	3141 : 3150	
OPT		KLS98 SOFTWARE VERSIONS NOT IDENTICALLY *KLS98 Softwareversionen nicht identisch*	3151	
OPT		ENGINE ROOM TEMPERATURE MEASURING SIGNAL FAILURE *Messsignalstörung Raumtemperatur*	3152	
OPT		RELEASE FROM GAS PLANT MISSING *Freigabe aus der Gasversorgung fehlt*	3153	
OPT		CH4 CONTENT LOW *CH4-Gehalt Minimum*	3154	
OPT	X	CH4 CONTENT MEASURING SIGNAL FAILURE *Messsignalstörung CH4-Gehalt*	3155	
OPT	X	GAS PRESSURE MEASURING SIGNAL FAILURE *Messsignalstörung Gasdruck*	3156	
OPT		SUCTION PRESSURE MEASURING SIGNAL FAILURE *Messsignalstörung Saugdruck*	3157	
OPT	X	O2 CONTENT MEASURING SIGNAL FAILURE *Messsignalstörung O2-Gehalt*	3158	

		FAILURE MESSAGES MODULE CONTROL (WARNING) *STÖRMELDUNGEN MODULSTEUERSCHRANK WARNEND*	Message No. *Meldungs-Nr.*	Index
OPT	X	GAS TEMPERATURE MEASURING SIGNAL FAILURE *Messsignalstörung Gastemperatur*	3159	
OPT	X	GAS VOLUME MEASURING SIGNAL FAILURE *Messsignalstörung Gasdurchfluss*	3160	
OPT		KLS98 KNOCK SENSOR MEASURING SIGNAL FAILURE CYLINDER xx *KLS98 Messsignalstörung Klopfsensor Zylinder xx*	3161 : 3180	
OPT		MONIC AIC OFFSET FAILURE CYLINDER xx *MONIC AIC Offset Fehler Zylinder xx*	3181 : 3200	
OPT		MONIC CAN COMMUNICATION FAILURE *MONIC CAN Kopplung gestört*	3201	
OPT		MONIC CPU FAILURE *MONIC CPU Fehler*	3202	
OPT		MONIC WIRING FAILURE *MONIC Verdrahtungsfehler*	3203	
		RESERVE *Reserve*	3204	
OPT		MONIC FIRING VOLTAGE TOO LOW *MONIC Zündspannung zu klein*	3205	
OPT		MONIC FIRING VOLTAGE TOO HIGH *MONIC Zündspannung zu groß*	3206	
OPT		MONIC AVERAGE FIRING VOLTAGE TOO HIGH *MONIC Zündspannung Mittelwert zu groß*	3207	
OPT		MONIC FIRING VOLTAGE DIFFERENCE TOO HIGH *MONIC Zündspannung Differenz zu groß*	3208	
OPT		IGNITION SETTING IS FORBIDDEN DURING THE ENGINE IS RUNNING *Zündung Parametrierung derzeit verboten*	3209	
OPT		KLS98 NUMBER OF COGS FALSE *KLS98 falsche Zähnezahl*	3210	
OPT		KLS98 PARAMETER CHECKSUM FAILURE *KLS98 Parameter Checksum Fehler*	3211	
OPT		FUEL GAS VOLUME TOO HIGH *Gasmenge Obergrenze*	3212	
OPT		GAS PROPORTIONING VALVE FUEL GAS VOLUME NOT REACHED *Gasdosierventil Gasmenge nicht erreicht*	3213	
OPT		EXHAUST GAS TEMPERATURE BEFORE TURBOCHARGER MEASURING SIGNAL FAILURE *Messsignalstörung Abgastemperatur vor Turbolader*	3214	
OPT		EXHAUST GAS TEMPERATURE BEFORE TURBOCHARGER HIGH *Abgastemperatur vor Turbolader Maximum*	3215	
	X	ENGINE OIL TEMPERATURE HIGH *Öltemperatur Maximum*	3216	
OPT	X	MISFIRING FAILURE *Aussetzerstörung*	3217	
	X	OIL PRESSURE LOW *Öldruck Minimum*	3218	

		FAILURE MESSAGES MODULE CONTROL (WARNING) *STÖRMELDUNGEN MODULSTEUERSCHRANK WARNEND*	Message No. *Meldungs-Nr.*	Index
	X	EXCITATION VOLTAGE LOW *Erregerspannung Minimum*	3219	
	X	JACKET WATER TEMPERATURE HIGH *Kühlwassertemperatur Maximum*	3220	
OPT		GAS PRESSURE LOW IN GAS TRAIN 1 *Gasdruck Minimum Gasstrecke 1*	3221	
OPT		GAS PRESSURE LOW IN GAS TRAIN 2 *Gasdruck Minimum Gasstrecke 2*	3222	
	X	INTAKE AIR TEMPERATURE MEASURING SIGNAL FAILURE *Messsignalstörung Ansauglufttemperatur*	3223	
	X	INTAKE AIR TEMPERATURE HIGH *Ansauglufttemperatur Maximum*	3224	
OPT		ENGINE OIL LEVEL LOW *Ölstand Motor Minimum*	3401	
	X	JACKET WATER PRESSURE LOW *Kühlwasserdruck Minimum*	3402	
OPT		JACKET WATER LEVEL LOW *Kühlwasserstand Minimum*	3403	
OPT		WATER PRESSURE COOLER CIRCUIT INSTALLATION LOW *Wasserdruck Kühlerkreis Anlage Minimum*	3404	
OPT		MODULE CONTROL PANEL CIRCUIT BREAKER TRIPPED *Sicherungsfall Modulsteuerschrank*	3405	
	X	JACKET WATER PRESSURE HIGH *Kühlwasserdruck Maximum*	3406	
OPT		MEASURING SIGNAL FAILURE OUTDOOR TEMPERATURE *Messsignalstörung Außentemperatur*	3407	
OPT	X	CYLINDER EXHAUST GAS TEMPERATURE POSITIVE DEVIATION FROM AVERAGE VALUE *Abgastemperatur Zylinder positive Abweichung vom Mittelwert*	3408	
OPT	X	CYLINDER EXHAUST GAS TEMPERATURE NEGATIVE DEVIATION FROM AVERAGE VALUE *Abgastemperatur Zylinder negative Abweichung vom Mittelwert*	3409	
OPT		IGNITION OUTPUT MONITORING CYLINDER *Zündung Ausgangsüberwachung Zylinder*	3410	
OPT	X	FUEL MIXTURE TEMPERATURE HIGH *Gemischtemperatur Maximum*	3411	
OPT		MAINS MONITORING DEVICE / GENERATOR PROTECTION RELAY FAILURE *Netzüberwachungsgerät / Generatorschutzrelais gestört*	3412	
OPT		ENGINE OIL PRESSURE BEFORE OIL FILTER MEASURING SIGNAL FAILURE *Messsignalstörung Öldruck vor Ölfilter*	3413	
OPT		OIL FILTER ACHIEVES LIFESPAN *Ölfilter erreicht Lebensdauergrenze*	3414	
OPT		OIL FILTER PLUGGED - REPLACE *Ölfilter verstopft - Bitte wechseln*	3415	
OPT		OIL FILTER PLUGGED - NO ENGINE START *Ölfilter verstopft - Kein Motorstart*	3416	

		FAILURE MESSAGES MODULE CONTROL (WARNING) *STÖRMELDUNGEN MODULSTEUERSCHRANK WARNEND*	Message No. *Meldungs-Nr.*	Index
		RESERVE *Reserve*	3417 : 3496	
	X	FAILURE IN THE SAFETY LOOP *Fehler in der Sicherheitsschleife*	3497	
OPT		THERMAL REACTOR: SENSOR FAILURE *Thermoreaktor: Fühlerbruch*	3498	
OPT		THERMAL REACTOR: COMPRESSED AIR SUPPLY FAILURE *Thermoreaktor: Störung Druckluftversorgung*	3499	
OPT		THERMAL REACTOR: EXHAUST GAS VALVE FAILURE, END POSITION *Thermoreaktor: Störung Abgasklappe Endlage*	3500	
OPT		THERMAL REACTOR: PRE-HEATING TIME EXCEEDED *Thermoreaktor: Aufheizzeit überschritten*	3501	
OPT		THERMAL REACTOR: CONTROL CABINET TEMPERATURE HIGH *Thermoreaktor: Schaltschranktemperatur Maximum*	3502	
OPT		THERMAL REACTOR: PERMISSIBLE DIFFERENCE OF TEMPERATURES TK1/TK2 IN EXCESS OF HIGH *Thermoreaktor: Zulässige Differenz von Temperaturen TK1/TK2 über Maximum*	3503	
OPT		THERMAL REACTOR: TEMPERATURE REACTION CHAMBER TK1/TK2 HIGH *Thermoreaktor: Temperatur Reaktionskammer TK1/TK2 Maximum*	3504	
OPT		THERMAL REACTOR: TEMPERATURE REACTION CHAMBER LOW *Thermoreaktor: Temperatur Reaktionskammer Minimum*	3505	
OPT		POWER REDUCTION IN ISOLATED OPERATION *Leistungsreduktion im Inselbetrieb*	3506	
OPT		OIL PRESSURE HIGH *Öldruck Maximum*	3507	
OPT		HEATING WATER RETURN TEMPERATURE AFTER COOLER MEASURING SIGNAL FAILURE *Messsignalstörung Rücklauftemperatur nach Kühler*	3508	
OPT		HEATING WATER RETURN TEMPERATURE AFTER COOLER HIGH *Rücklauftemperatur nach Kühler Maximum*	3509	
OPT		FAILURE CO2 FAN *Störung CO2 Ventilator*	3510	
OPT		FAILURE CO2 UNIT *Störung CO2 Anlage*	3511	
OPT		FAILURE CO2 FLAP *Störung CO2 Klappe*	3512	
OPT		EXHAUST GAS TEMPERATURE AFTER HEAT EXCHANGER 1 MEASURING SIGNAL FAILURE *Messsignalstörung Abgastemperatur nach Abgaswärmetauscher 1*	3513	
OPT		EXHAUST GAS TEMPERATURE AFTER HEAT EXCHANGER 2 MEASURING SIGNAL FAILURE *Messsignalstörung Abgastemperatur nach Abgaswärmetauscher 2*	3514	
OPT		AIRCONDITIONING UNIT FAILURE IN MODULE INTERFACE CABINET *Störung Klimagerät im Modulinterfaceschrank*	3515	
	X	EXCITATION VOLTAGE HIGH *Erregerspannung Maximum*	3516	

		FAILURE MESSAGES MODULE CONTROL (WARNING) *STÖRMELDUNGEN MODULSTEUERSCHRANK WARNEND*	Message No. *Meldungs-Nr.*	Index
	X	COMMUNICATION TO DIA.NE WIN SERVER FAILED *Kommunikation zum DIA.NE WIN Server ausgefallen*	3517	
	X	DATA REGISTRATION IN DIA.NE WIN SERVER FAILED *Datenaufzeichnung am DIA.NE WIN Server ausgefallen*	3518	
OPT		HEATING WATER PUMP FAILURE *Störung Heizwasserpumpe*	3519	
OPT		FLARE FAILURE *Störung Fackel*	3520	
OPT		MIXTURE COOLING WATER TEMPERATURE HIGH *Gemischkühlwassertemperatur Maximum*	3521	
OPT		SPEED TURBOCHARGER A MEASURING SIGNAL FAILURE *Messsignalstörung Drehzahl Turbolader A*	3522	
OPT		SPEED TURBOCHARGER B MEASURING SIGNAL FAILURE *Messsignalstörung Drehzahl Turbolader B*	3523	
OPT		TURBOCHARGER SPEED HIGH *Turboladerdrehzahl Maximum*	3524	
OPT		CALORIFIC VALUE MEASURING SIGNAL FAILURE *Messsignalstörung Heizwert*	3525	
OPT	X	HEATING WATER RETURN TEMPERATURE BEFORE ENGINE MEASURING SIGNAL FAILURE *Messsignalstörung Rücklauftemperatur vor Motor*	3526	
OPT		HEATING WATER RETURN TEMPERATURE BEFORE ENGINE HIGH *Rücklauftemperatur vor Motor Maximum*	3527	
OPT		EXHAUST GAS BACKPRESSURE HIGH *Abgasgegendruck Maximum*	3528	
		RESERVE *Reserve*	3529	
OPT		SAFI CAN COMMUNICATION FAILURE *SAFI CAN Kommunikation gestört*	3530	
OPT	X	SAFI CAN ERRORRATE TOO HIGH *SAFI CAN Fehlerrate zu hoch*	3531	
OPT		SAFI WRONG TYPE OF SOFTWARE *SAFI falsche Software*	3532	
OPT	X	SAFI SOFTWARE VERSIONS NOT IDENTICALLY *SAFI Softwareversionen nicht identisch*	3533	
OPT		SAFI PARAMETER FAILURE *SAFI Parameter Fehler*	3534	
OPT	X	SAFI SETTING IST FORBIDDEN DURING THE ENGINE IS RUNNING *SAFI Parametrierung im Motorbetrieb verboten*	3535	
OPT		SAFI CAMSHAFT/RESET PICKUP MISSING *SAFI Ausfall Nockenwellen/Reset Pickup*	3536	
OPT		SAFI TRIGGER PICKUP MISSING *SAFI Ausfall Trigger Pickup*	3537	
OPT		SAFI HARDWARE FAILURE *SAFI Hardwarefehler*	3538	

		FAILURE MESSAGES MODULE CONTROL (WARNING) *STÖRMELDUNGEN MODULSTEUERSCHRANK WARNEND*	Message No. *Meldungs-Nr.*	Index
OPT	X	SAFI ELECTRONIC TEMPERATURE TOO HIGH *SAFI Elektroniktemperatur zu hoch*	3539	
OPT		MISFIRING FAILURE *Aussetzerstörung*	3540	
OPT	X	KNOCK SENSOR MEASURING SIGNAL FAILURE *Messsignalstörung Klopfsensor*	3541	
OPT	X	CYLINDER EXHAUST GAS TEMPERATURE MEASURING SIGNAL FAILURE *Messsignalstörung Abgastemperatur*	3542	
OPT		IGNITION POINT DEVIATION TOO HIGH *Zündzeitpunktabweichung zu groß*	3543	
OPT		IGNITION HARDWARE FAILURE *Zündung Hardwarefehler*	3544	
OPT	X	IGNITION OUTPUT FAILURE *Zündung Ausgangsfehler*	3545	
OPT	X	IGNITION COIL OFFSET FAILURE *Zündspule Offset Fehler*	3546	
OPT	X	SPARK PLUG VOLTAGE TOO LOW *Zündspannung zu klein*	3547	
OPT	X	SPARK PLUG VOLTAGE TOO HIGH *Zündspannung zu groß*	3548	
OPT	X	AVERAGE SPARK PLUG VOLTAGE TOO HIGH *Zündspannungsmittelwert zu groß*	3549	
OPT	X	SPARK PLUG VOLTAGE DIFFERENCE TOO HIGH *Zündspannungsdifferenz zu groß*	3550	
OPT	X	IGNITION POWER LIMITATION ACTIVE *Zündung Leistungsbegrenzung aktiv*	3551	
OPT	X	IGNITION POWER SUPPLY OVERLOAD *Zündung Spannungsversorgung überlastet*	3552	
		RESERVE *Reserve*	3553	
		RESERVE *Reserve*	3554	
		RESERVE *Reserve*	3555	
		RESERVE *Reserve*	3556	
		RESERVE *Reserve*	3557	
		RESERVE *Reserve*	3558	
		RESERVE *Reserve*	3559	
		RESERVE *Reserve*	3560	
	X	OVERSPEED (RPS-CONTROL SYSTEM) *Überdrehzahl (RPS)*	3561	

		FAILURE MESSAGES MODULE CONTROL (WARNING) *STÖRMELDUNGEN MODULSTEUERSCHRANK WARNEND*	Message No. *Meldungs-Nr.*	Index
	X	FUEL MIXTURE TEMPERATURE LOW *Gemischtemperatur Minimum*	3562	
OPT		GENERATOR LUBRICATION FAILURE *Störung Generatorschmierung*	3563	
OPT	X	FAILURE TURBOBYPASS VALVES *Störung Turbobypassventile*	3564	
	X	GENERATOR POWER SETPOINT MEASURING SIGNAL FAILURE *Messsignalstörung Generator Leistungssollwert*	3565	
	X	GENERATOR POWER FACTOR SETPOINT MEASURING SIGNAL FAILURE *Messsignalstörung Generator Leistungsfaktorsollwert*	3566	
		RESERVE *Reserve*	3567	
		RESERVE *Reserve*	3568	
		RESERVE *Reserve*	3569	
		RESERVE *Reserve*	3570	
		RESERVE *Reserve*	3571	
		RESERVE *Reserve*	3572	
		RESERVE *Reserve*	3573	
		RESERVE *Reserve*	3574	
		RESERVE *Reserve*	3575	
		RESERVE *Reserve*	3576	

GE Proprietary Information: CONFIDENTIAL! Use or disclosure of data contained on this sheet is subject to the restrictions on the cover or on the first page.

1 Module control cabinet

Position	Wiring diagram no.	Name
1	...	Brand label
2	+A-12B1	Mains monitoring device
3	+A-10M1	panel fan
4	...	Air outlet
10	+A-46K1	DIANE XT3
11	...	Caution label
12	+A-17S1	Service selector switch
13	+A-17S2	Demand selector switch
14	+A-17S3	Synchronisation selector switch
15	+A-56S1	Emergency stop
17	+A-14B1	Dif protection Device

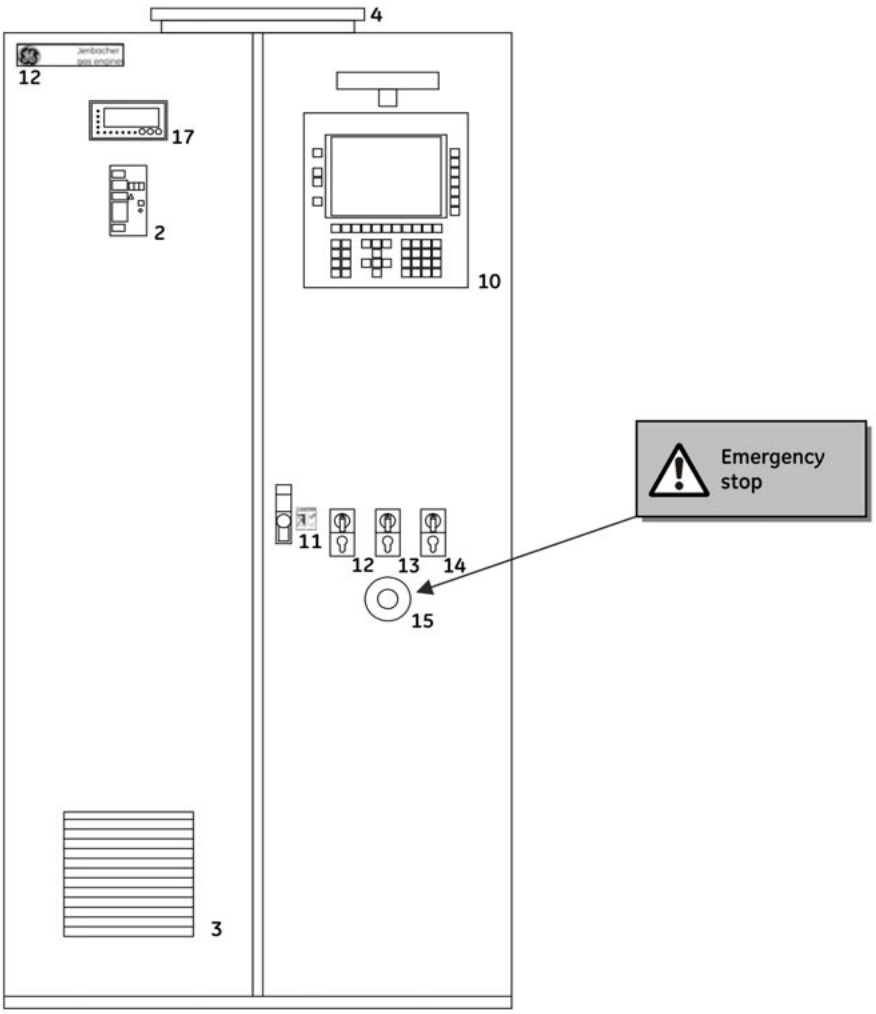

GE Proprietary Information: CONFIDENTIAL! Use or disclosure of data contained on this sheet is subject to the restrictions on the cover or on the first page.

2 Module interface cabinet

Position	Wiring diagram no.	Name
1	+M-43S1	Emergency stop
2	+M-11M1	panel fan
3	...	Outlet filter
4	...	Caution label

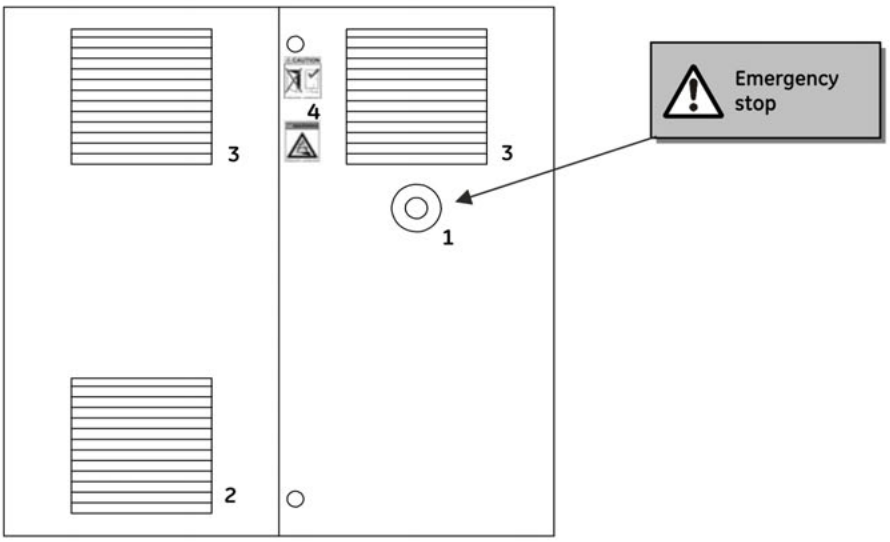

GE Proprietary Information: CONFIDENTIAL! Use or disclosure of data contained on this sheet is subject to the restrictions on the cover or on the first page.

3 Power panle

Position	Wiring diagram no.	Name
1	+L-9M1	panel fan
2	...	Caution label
3	...	Brand label

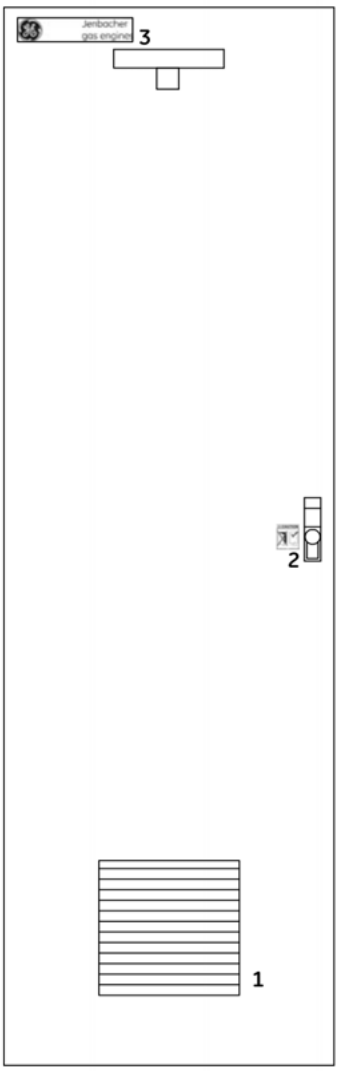

GE Proprietary Information: CONFIDENTIAL! Use or disclosure of data contained on this sheet is subject to the restrictions on the cover or on the first page.

1 Information on the DIA.NE XT User Manual ... 3
2 DIA.NE XT3 is much more - a system description ... 3
3 Components and hardware ... 4
3.1 Components ... 4
3.2 Hardware ... 5
3.2.1 Power panel 6
3.2.2 X2X Link 7
3.2.3 I/O MODULES 7
4 Interfaces ... 9
4.1 Interface with the DIA.NE WIN system ... 9
4.2 Interfaces with inputs and outputs ... 9
4.3 Interface with the decentralised control components ... 10
4.4 Interfaces with customer's higher-order control system ... 10
5 Visualisation system ... 10
5.1 General visualisation ... 10
5.2 Additional visualisation features ... 10
5.2.1 Parameter manager 10
5.2.2 Alarm management system 10
5.2.3 Online trends 11
5.2.4 Access protection 11
5.2.5 Activity recording 11
5.2.6 Multiple language capability 11
6 User Interface ... 11
6.1 Operation and navigation ... 11
6.1.1 Arrangement of keys 11
6.1.2 Key functionalities 14
6.2 Representation ... 19
6.2.1 Customer and expert view 19
6.2.2 Display in Customer View 19
6.2.3 Display in Expert View 23
6.2.4 Display elements 25
7 Visualisation screens ... 28
7.1 MAIN Plant Overview ... 28
7.1.1 Overview (P_01.1) 28
7.1.2 Engine Startup Assistant (P_02.1) 33
7.1.3 Operational Data (P_02.1) 35
7.1.4 Auxiliaries 1 (P_04.1) 36
7.1.5 Auxiliaries 2 (P_04.2) 37
7.1.6 Operational Logbook 1 (P_05.1) 38
7.1.7 Operational Logbook 2 (P_05.2) 39
7.2 Electrical Diagram (ELE) ... 40
7.2.1 Overview (P_11.1) 41
7.2.2 Generator Details 1 (P_12.1) 43
7.2.3 Synchronisation (P_13.1 44
7.2.4 Generator (P_14.1) 48
7.3 Hydraulic diagram (HYD) ... 50
7.3.1 Oil/Cooling Water screen (P_21.1) 50

GE Proprietary Information: CONFIDENTIAL! Use or disclosure of data contained on this sheet is subject to the restrictions on the cover or on the first page.

7.4 Gas Supply (GAS) 52
7.4.1 Gas Details (P_31.1) 52
7.4.2 Special Gas (P_32.1) 56
7.4.3 Gas Mixture (P_33.1) 58
7.5 Engine controller (ENG) 60
7.5.1 Engine Controller Overview (P_41.1) 60
7.5.2 Power Reduction 1 (P_41.2) 65
7.5.3 Power Reduction 2 (P_41.3) 66
7.5.4 LEANOX® Controller (P_42.1) 67
7.5.5 LEANOX® Controller Settings (P_42.2) 68
7.5.6 Speed, Power and Isolated Operation Controller (P_43.1) 70
7.5.7 Speed, Power and Isolated Operation Controller Settings (P_43.2) 72
7.5.8 Mixture Temperature Controller (P_44.1) 74
7.5.9 Mixture Temperature Controller Autotuning (P_44.2) 76
7.5.10 Knock Controller (P_45.1) 78
7.5.11 Ignition (P_46.1) 80
7.6 Cylinder information (CYL) 82
7.6.1 Cylinder Measured Values (P_51.1) 82
7.6.2 Cylinder Comparison (P_51.2) 85
7.6.3 Ignition Voltage Measurement (P_52.1) 86
7.6.4 Ignition Point Display (P_53.1) 88
7.6.5 Ignition Output Error (P_53.2) 89
7.6.6 Knock Integrator (P_54.1) 90
7.6.7 Knock Noise (P_54.2) 91
7.6.8 Valve Noise (P_54.3) 92
7.7 Exhaust system information (EXH) 94
7.7.1 Exhaust System Overview (P_61.1) 94
7.7.2 Exhaust Gas Temperature at Cylinder Outlet (P_54.1) 96
7.7.3 Turbocharger (P_54.1) 97
7.7.4 Thermal Reactor (P_61.1) 98
7.7.5 Codinox (P_66.1) 99
7.8 Plant controllers (CTR) 101
7.8.1 Plant Controller Overview (P_71.1) 101
7.8.2 Plant Controller Details (P_71.2) 103
7.8.3 Plant Controller Autotuning (P_71.3) 104
7.9 Customer Screens (CUSTOM) 106
7.9.1 Customer Screen (P_81.1) 107
7.10 System Information (SYS) 107
7.10.1 System Overview (P_91.1) 107
7.10.2 SAFI Hardware Details 1 (P_92.1) 109
7.10.3 SAFI Hardware Details 2 (P_92.2) 111
7.11 Parameter Manager (PARA) 111
7.11.1 Parameter Manager (P_Para1.1) 112
7.11.2 Parameter Manager (P_Para2.1) 113
7.12 User Management (USER) 114
7.12.1 User Settings (P_U_1.1) 114
7.13 Alarm Management (ALARM) 115
7.13.1 Current Messages (P_A1.1) 115

GE Proprietary Information: CONFIDENTIAL! Use or disclosure of data contained on this sheet is subject to the restrictions on the cover or on the first page.

7.13.2 Historical Messages (P_AI_2.1) 117
7.13.3 Measurements at Failure (P_AI_5.1) 117
7.13.4 Trending at Failure (P_AI_5.1) 119
7.14 Help System (HELP) 120
7.14.1 Help for Alarm Management Entry (A_Help_XXX) 120

1 Information on the DIA.NE XT User Manual

Options

Not all of the pages or display and entry fields listed in this documentation are necessarily available for your engines.

Depending on number of engines, engine type, number of cylinders and module and control system configurations, the DIA.NE XT system will only display the screens that are relevant to your engines!

If you have any questions concerning the configuration of your modules, please contact our Sales or Service Department (www.gejenbacher.com).

Reference texts

`[text]`

The text in the screens is always in English. Where direct reference is made in a screen to a reference text, it will be placed within square brackets and shown in bold and italics.

2 DIA.NE XT3 is much more - a system description

DIA.NE XT3 is the new generation of engine management system used by GE Jenbacher in all of its engine types. It consists of a control unit, which includes a visualisation unit, in a single device.

The optional PC visualisation unit DIA.NE WIN provides a central and convenient means of operating the Jenbacher modules, as well as a customer-specific coupling to a higher-order control system.

One of the main goals when developing DIA.NE XT3 was the perfect combination of powerful and flexible control electronics on the one hand and a user-friendly operation concept on the other.

The innovative hardware concept is made up of state-of-the-art components and sets new standards in terms of power, functionality and reliability of operation.

The innovative graphical information display makes DIA.NE XT3 a particularly user-friendly human-machine interface, thereby making the plant much easier to handle for both the operator and the service and maintenance staff. Particular consideration has been given to customer specifications and requirements. For example, a specific expert view containing large amounts of information has been generated for customers who are interested in details. The customer view is ideal for those who require an interface reduced to the most important items.

A special detail of the new customer view consists of keys to the individual visualisation screens. This is a fast and uncomplicated way of finding out what the various symbols mean.

The new help system is another milestone on the way to achieving a customer-friendly approach. For example, online help facilities have been provided for the visualisation screens and for individual alarm entries.

The large 10.4" screen and a logical, simplified navigation system make DIA.NE XT3 an easy-to-operate human-machine interface.

GE Proprietary Information: CONFIDENTIAL! Use or disclosure of data contained on this sheet is subject to the restrictions on the cover or on the first page.

3 Components and hardware

3.1 Components

DIA.NE XT3 consists of the following units:

① Engine control and visualisation unit based on a panel controller

② Decentralised I/O module for module control (X2X - Link)

③ Decentralised I/O module on the engine (X2X - Link)

④ Decentralised engine control/monitoring components (CAN bus)

⑤ Connection to DIA.NE WIN visualisation unit on client PC (Ethernet)

⑥ Connection to higher-order control system (RS232 / RS485)

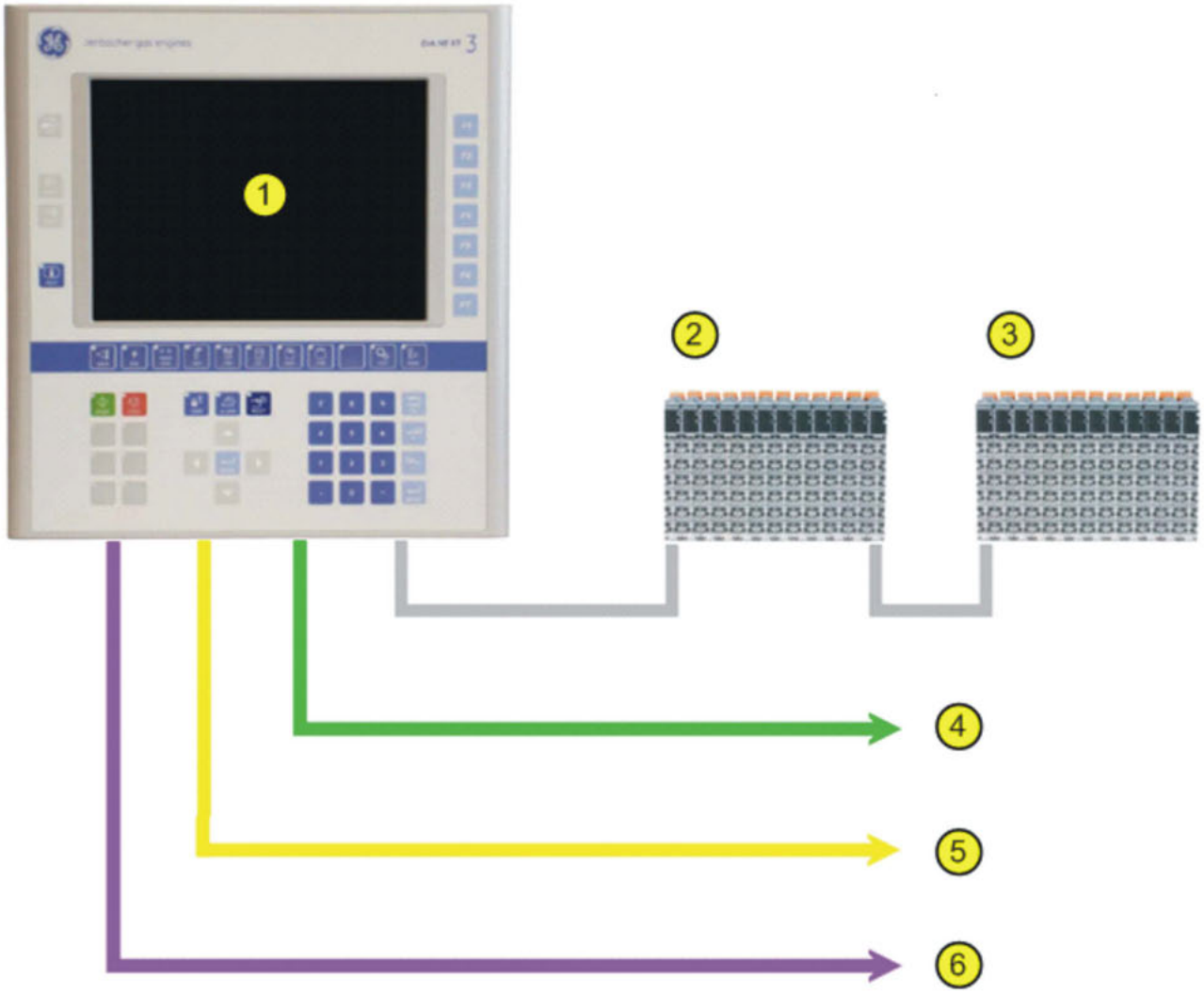

GE Proprietary Information: CONFIDENTIAL! Use or disclosure of data contained on this sheet is subject to the restrictions on the cover or on the first page.

The individual components are connected via interference-free industrial bus media. All measurement data are communicated to the module itself by means of a decentralised I/O concept.

The consistent use of state-of-the-art technology therefore reduces the number of electrical connections to the module to an absolute minimum.

3.2 Hardware

General

All of the control functions and substantial parts of the engine monitoring and control units on the engine control system have been created using digital technology. The hardware used, known as a power panel, is a combination of PLC control and graphical user interface.

At the heart of this panel is a powerful standard CPU. The advantage of this is that these microprocessors already provide a substantial bandwidth, which means that it will be possible to integrate ever more powerful compatible motherboards into the system in future.

A separate communication module is used to copy the data required to map the CPU process from the I/O modules. This copying process is performed in parallel with the actual computations in the CPU and does not add to its load.

To keep the amount of cabling running to the module to an absolute minimum, a decentralised I/O concept has been created for process connection. To this end, a module has been placed in the module interface cabinet to combine all the engine measurement signals and control commands. It is connected to the engine controller in the module control cabinet via a fast, interference-free bus connection (X2X - Link).

A variety of modules are used at I/O level. The system allows the digital and analogue I/O modules to be flexibly adjusted as required.

GE Proprietary Information: CONFIDENTIAL! Use or disclosure of data contained on this sheet is subject to the restrictions on the cover or on the first page.

3.2.1 Power panel

GE Proprietary Information: CONFIDENTIAL! Use or disclosure of data contained on this sheet is subject to the restrictions on the cover or on the first page.

3.2.2 X2X Link

With 400 µs cycle time for a complete automation system, X2X Link is the basis for very fast, cyclical and strictly deterministic data traffic.

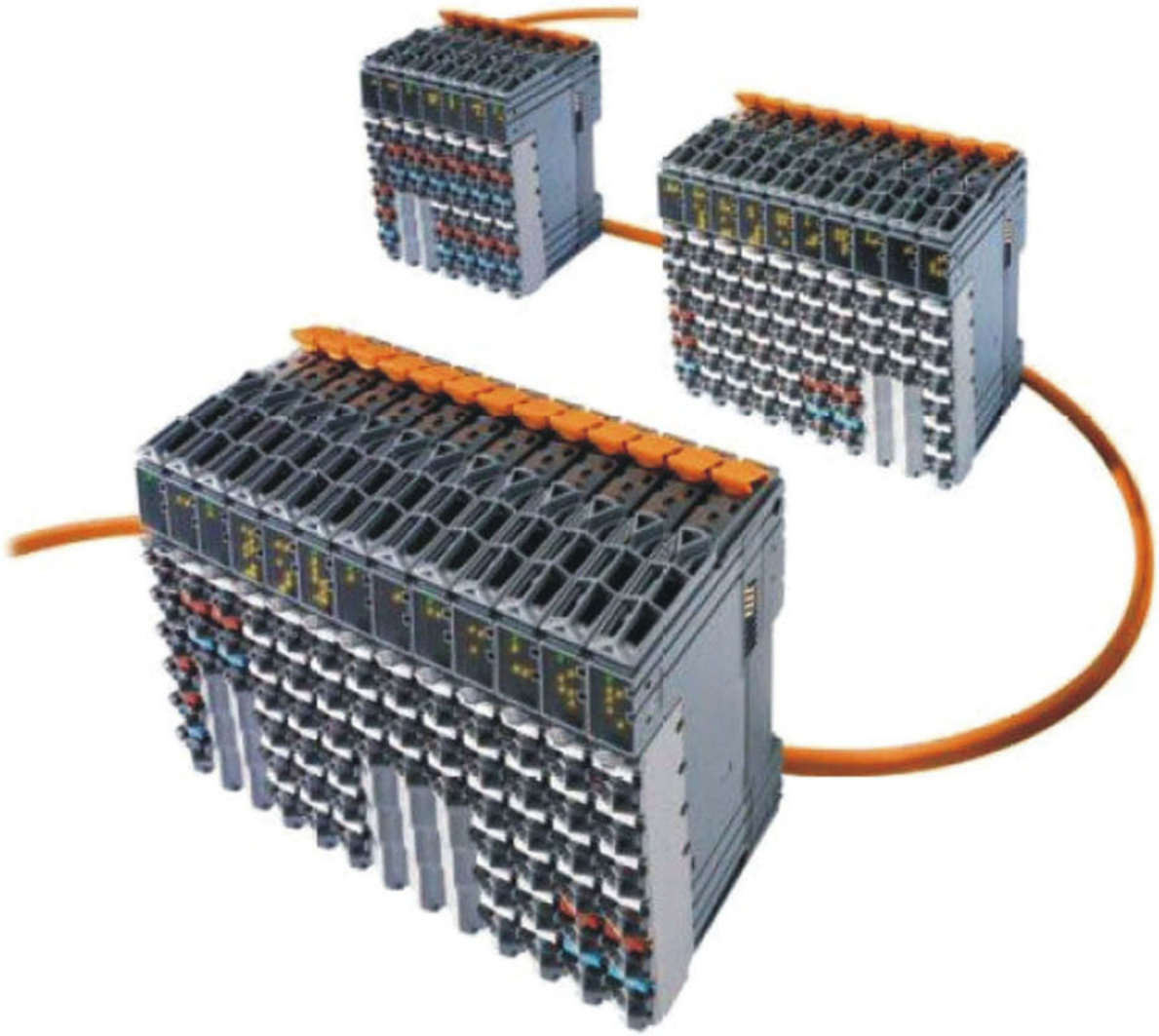

3.2.3 I/O MODULES

The I/O hardware is a modular industrial automation system. The control philosophy is based on universal scalability and full compatibility. In this way it is possible to achieve response times of less than 10 ms. X2X Link enables the system to be expanded without problems. Modular system design permits flexible configurations at a granularity of 1 - -32 channels per module and the direct connection of sensors and actuators.

GE Proprietary Information: CONFIDENTIAL! Use or disclosure of data contained on this sheet is subject to the restrictions on the cover or on the first page.

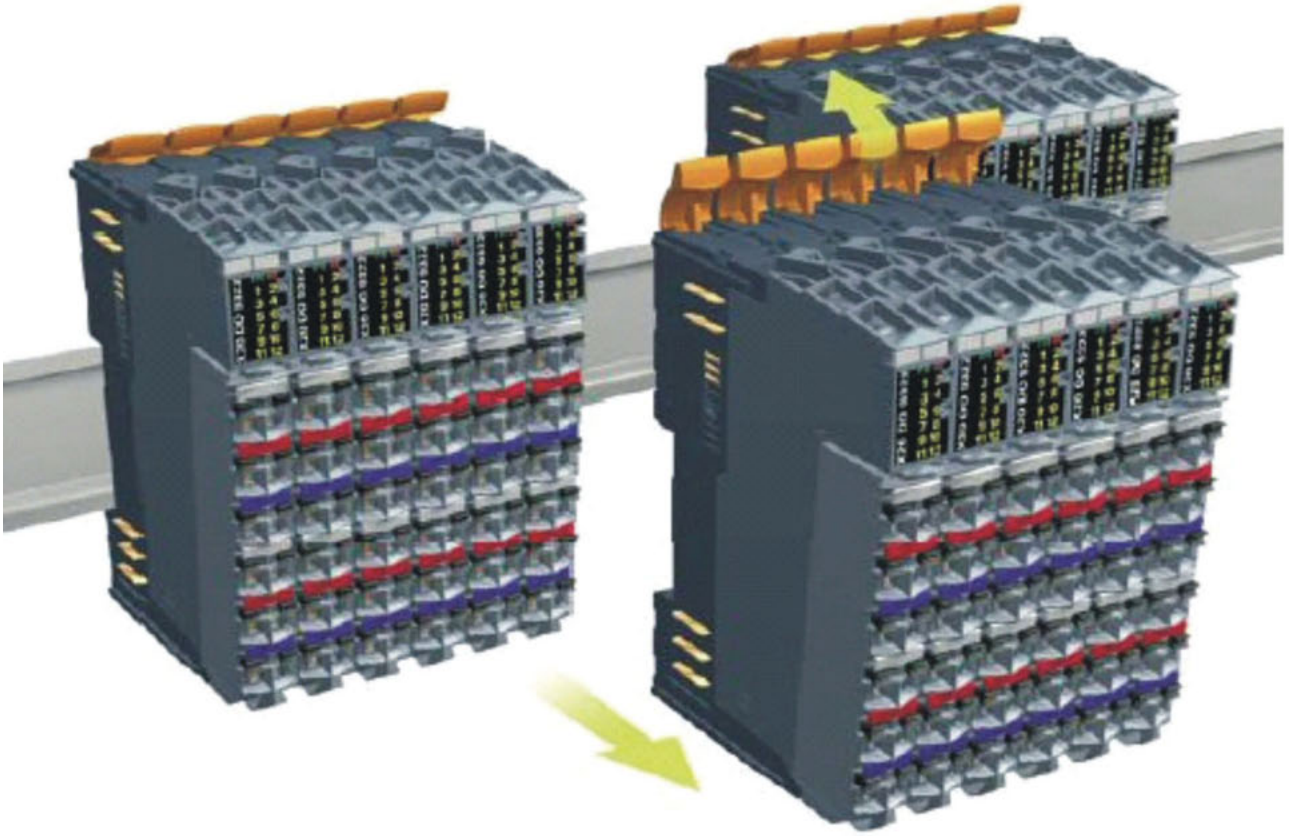

GE Proprietary Information: CONFIDENTIAL! Use or disclosure of data contained on this sheet is subject to the restrictions on the cover or on the first page.

4 Interfaces

4.1 Interface with the DIA.NE WIN system

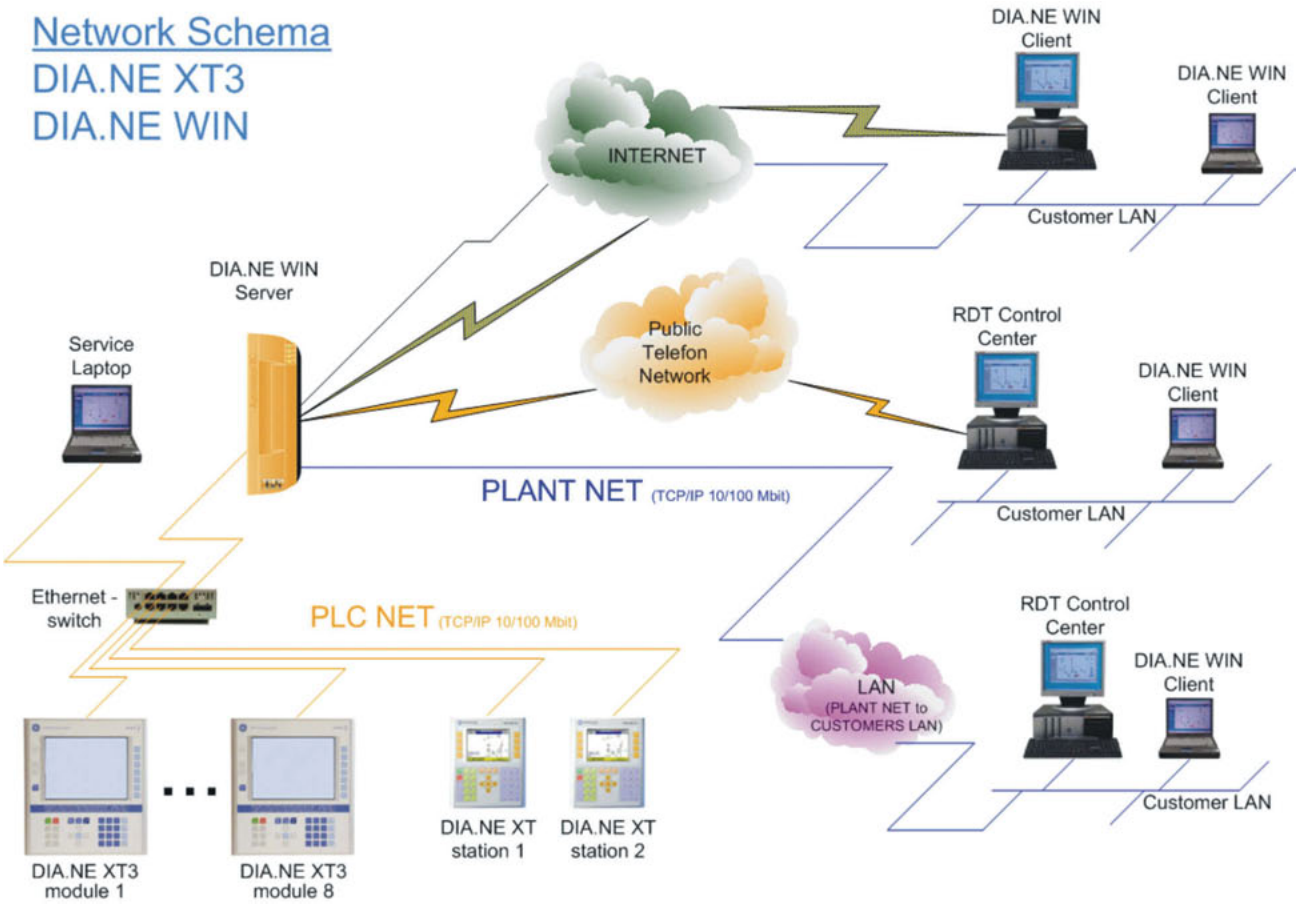

Control network [PLC NET]

The control network connects the engine and master controls to the DIA.NE WIN server. A second DIA.NE WIN server is used in multi-engine plants with more than 4 engines. All participants within a single network are arranged radially (Ethernet 10/100BaseT) with switches.

Plant network [PLANT NET]

In the case of multi-engine plants with more than 4 engines, the plant network interconnects the two DIA.NE WIN servers. Once again, a radially arranged Ethernet network (Ethernet 100BaseT) is used.

4.2 Interfaces with inputs and outputs

The interface with the inputs and outputs of the engine control system is provided by the real-time capable X2X protocol. This protocol guarantees a high data rate and a high degree of reliability.
The individual modules always communicate via the uniform X2X Link backplane, whether next to each other on

GE Proprietary Information: CONFIDENTIAL! Use or disclosure of data contained on this sheet is subject to the restrictions on the cover or on the first page.

the top hat rail, through a network connection in the same switch cabinet or over 100 m away in different switch cabinets.

4.3 Interface with the decentralised control components

Decentralised control components are activated via a CAN bus connection.

Devices can be connected for:

control → ignition, gas proportioning valve (optional)

monitoring → KLS 98, SAFI (optional)

measurement → MONIC (optional)

4.4 Interfaces with customer's higher-order control system

The DIA.NE XT3 system makes it possible to provide data for a higher-order control system belonging to the customer.

Several protocols are available. For example, serial protocols such as Modbus RTU (Slave) and Profibus DP (Slave) are possible options.

5 Visualisation system

5.1 General visualisation

The visualisation system increases the operational reliability and provides an ease of use which meets the highest expectations. The visualisation system handles all display and control functions. The use of a powerful processor ensures that the system operates safely.

The display contains a clear and functional summary of the measured values. All values are presented graphically. The system is operated using screen selection and function keys.

System messages and screen texts are all displayed in the language selected.

In addition to the usual process diagrams, the user is presented with tables showing the auxiliary equipment and the most important measured values.

5.2 Additional visualisation features

5.2.1 Parameter manager

An easy-to-use parameter manager is provided in DIA.NE XT3 to display, adjust and store all engine and plant parameters. To make the parameters easy to find, they have been structured into up to three levels.

5.2.2 Alarm management system

The DIA.NE XT3 alarm management provides the user with a powerful diagnostic tool. All error messages are displayed in plain text and are arranged in tabulated form. The sequence of events can be clearly seen from the time indication attached to the error messages. In addition, shutdown-related measured quantities are displayed in a trending diagram.

GE Proprietary Information: CONFIDENTIAL! Use or disclosure of data contained on this sheet is subject to the restrictions on the cover or on the first page.

5.2.3 Online trends

A multi-colour trend overview makes it possible to observe closely the real-time chronological trends of the relevant measured values.

5.2.4 Access protection

When accessing the system, every user must log in using his own user name and user code. This enables user identification and the release of specific functionalities and allows the user interface to be adapted to the specific user group.

To protect against illegal access, the password entry is blocked for a specified period after three unsuccessful login attempts.

5.2.5 Activity recording

All user activities, e.g. login, logout, starting and stopping the module, etc. are recorded (activity logging).

5.2.6 Multiple language capability

The user interface is available in two languages and the user can switch between them. English is installed as the default language on each DIA.NE XT system.

Additionally, one of the following languages can be displayed on the DIA.NE XT3 system:

Bulgarian, Chinese, Czech, German, Danish, Spanish, Estonian, Finnish, French, Greek, Croatian, Hungarian, Lithuanian, Italian, Latvian, Dutch, Norwegian, Polish, Portuguese, Romanian, Russian, Swedish, Serbian, Slovak, Slovene, Turkish;

The pressure and temperature display values can be changed between "bar", "psi" and "Pa" and between "degrees Celsius" and "degrees Fahrenheit" respectively. All other units can be switched between the "ISO" and the "US" system.

6 User Interface

6.1 Operation and navigation

6.1.1 Arrangement of keys

The keyboard is divided into the following units:

① Screen selection keys

② Function keys

③ Tab key

④ Next screen/last screen

⑤ Help key

⑥ Engine start/stop

⑦ Control keys

GE Proprietary Information: CONFIDENTIAL! Use or disclosure of data contained on this sheet is subject to the restrictions on the cover or on the first page.

⑧ Alarm management

⑨ Cursor keys

⑩ Numerical keys

GE Proprietary Information: CONFIDENTIAL! Use or disclosure of data contained on this sheet is subject to the restrictions on the cover or on the first page.

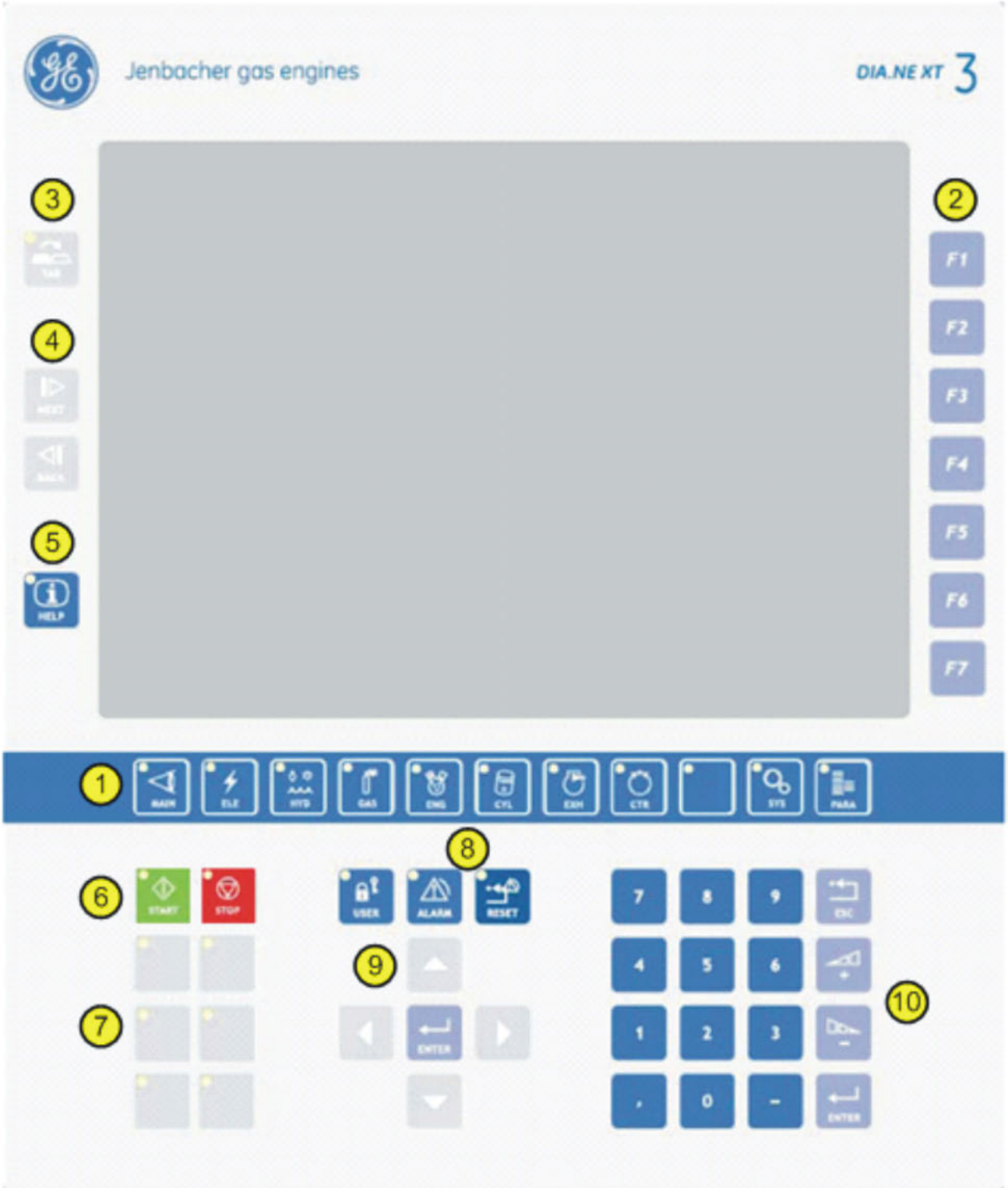

GE Proprietary Information: CONFIDENTIAL! Use or disclosure of data contained on this sheet is subject to the restrictions on the cover or on the first page.

6.1.2 Key functionalities

Screen selection keys

The screen selection keys are the highest level in the navigation system. Pressing one of the keys displays the category in the relevant first screen (**F1**). You can select from the following 12 categories:

Main screens for the customer

Electrical diagram

Lube oil/cooling water schematic

Gas details

Engine controller

Cylinder measured values

Exhaust gas measurement data

Plant controllers

GE Proprietary Information: CONFIDENTIAL! Use or disclosure of data contained on this sheet is subject to the restrictions on the cover or on the first page.

Spare screens for customer applications

System displays

Parameter manager

User settings

Alarm management system

The blue indicator lights in the top left-hand corner of the screen selection keys informs the user of the category they have chosen to view.

Function keys

Function keys **F1** to **F7** are the second level of the navigation system.

GE Proprietary Information: CONFIDENTIAL! Use or disclosure of data contained on this sheet is subject to the restrictions on the cover or on the first page.

Tab switching

The third and lowest navigation level is the tab switch key. By pressing the **TAB** key, you can alternate between up to three different visualisation screens. As well as the screen itself, the lighting of the white indicator light will tell you if other tabs are available.

Next screen/last screen

The **NEXT** and **BACK** screens allow you to navigate quickly between the current view and views you have previously visited. You may already be familiar with this function from various web browsers. By pressing the **BACK** key, you can browse back up to 10 views.

Help key

Whenever a help page is available for a page or an alarm entry, the indicator light on the **HELP** key lights up. Press this key to go to the appropriate help view.

Engine start/ stop

Press the **START** and **STOP** keys to start or stop the module in manual mode.

Function indicator light on **START** key

- Flashing: The module is in the start preparation phase. A manual or automatic start has been requested.
- Continuous light: The engine is running.

Function indicator light on **STOP** key

GE Proprietary Information: CONFIDENTIAL! Use or disclosure of data contained on this sheet is subject to the restrictions on the cover or on the first page.

- Flashing: The module is in shutdown mode. Shutdown has been requested manually, automatically or due to a failure.
- Continuous light: The engine is not running and is not ready for operation.

Control keys

You can allocate up to 6 keys for additional control commands, such as manual synchronisation, horn off, etc. When a key has been allocated a function, this is shown by a labelling it.

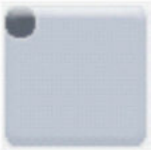

Alarm management system

Press the **ALARM** key to go to the alarm management pages, as listed above.

The special feature of this key is the indicator light function. A flashing light means that an alarm has been triggered. This flashing becomes a constant light as soon as you switch to a page in the alarm management system. A fault can be displayed remotely if the screen saver has been activated.

Pressing the **RESET** key resets warnings and failures. Trips can only be reset when the operating mode selector is in OFF position.

When the white indicator light lights up this generally means that a reset is possible.

Cursor keys

The cursor keys are only used to navigate between the individual entry fields.

Warning: do not use them to select an option from a drop-down menu. Use the plus or minus keys (**+**/**-**) to select from these menus.

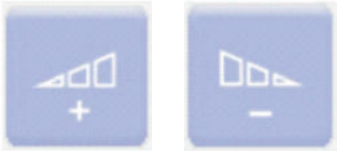

Press the **ENTER** key to save entries and actuate pushbuttons.

GE Proprietary Information: CONFIDENTIAL! Use or disclosure of data contained on this sheet is subject to the restrictions on the cover or on the first page.

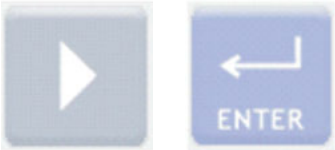

Numerical keys

The numerical keys are used to enter numerical data.

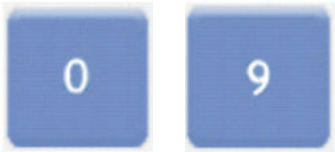

The following keys are provided for entering negative (**-**) figures or figures with decimal places (**,**).

If you type in a figure incorrectly and you have not confirmed it by pressing **ENTER**, you can cancel the entry by pressing the **ESC** key.

The plus or minus keys (**+/-**) are active each time you enter figures. You can use them to change the last digit of the figure. Save the value by pressing the **ENTER** key.

These keys are use to select the desired option in drop-down menus.

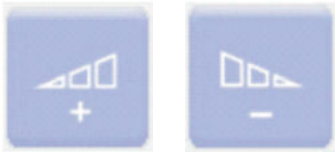

The **ENTER** key is used to complete entries and actuate software pushbuttons.

GE Proprietary Information: CONFIDENTIAL! Use or disclosure of data contained on this sheet is subject to the restrictions on the cover or on the first page.

6.2 Representation

6.2.1 Customer and expert view

GE Jenbacher gas engines are highly efficient energy producers. A large number of measurements have to be carried out to optimise the engine control system and perfect the plant control system. The resulting quantity of displays is often irritating, as the values of interest to the plant operator are not explicitly displayed. Now, with the advent of the DIA.NE XT3, a new approach has been adopted which is intended to assist the customer to operate the engine.

The operator can decide how much data to visualise.

The full range of measured values is displayed in Expert View. In Customer View, displays are reduced to the essential. In addition, symbols and labels should make the screens easier to understand.

You can switch views in the **USER** screen group.

6.2.2 Display in Customer View

The screen is divided into the following sections:

- Status indication
- Date and time
- Navigation
- Screen content

Status indication

The status indication is made up of the following elements.

The engine status is displayed in the form of an animated circle. When this circle is "turning", the engine is running as well.

This circle only "stands still" when the engine is coasting down.

When a warning is imminent, the circle turns yellow and a warning triangle appears.

GE Proprietary Information: CONFIDENTIAL! Use or disclosure of data contained on this sheet is subject to the restrictions on the cover or on the first page.

If a trip occurs, a red symbol will make you aware of it.

Information on the status of the engine run-up is provided by the progress indication. This indication allows you to see at a glance whether the engine is running at the pre-selected operating point or not.

Module has not been activated

Module has been activated

Engine start-up

Idle mode

Mains-parallel or isolated operation

LEANOX® control system enabled

The engine operates at 95% efficiency or more in relation to the nominal load of the current gas type.

The module status is shown in plain to the left of the status indication.

The monitor symbol shows whether a user is online via DIA.NE WIN.

A user is connected to the engine control system via DIA.NE WIN.

The icons below indicate whether a user has logged on to DIA.NE XT3.

No user has logged on.

A user has logged on.

The electrical power currently being produced is displayed as a numerical value and as a progress bar. The bar grows from left to right. When it reaches the right-hand side, the engine has reached the nominal power for the current gas type.

GE Proprietary Information: CONFIDENTIAL! Use or disclosure of data contained on this sheet is subject to the restrictions on the cover or on the first page.

Because of the different modes, stated individually in the power reduction screen, a power reduction may be required. This operational status is indicated when the progress bar changes colour to orange.

Date and time

The current date and time are displayed below the power indicator.

15.10.2009 | 11:15:52

Navigation

On the right-hand side, the labels on the function keys are displayed according to the currently selected main screen group. The international abbreviation of the main screen group is displayed on the left in the individual fields. The title of the subscreen appears in the centre below.

To switch to the relevant subscreen, press function keys **F1** to **F7**.

A change of colour and the direction of the arrow indicates the screen you are currently in.

GE Proprietary Information: CONFIDENTIAL! Use or disclosure of data contained on this sheet is subject to the restrictions on the cover or on the first page.

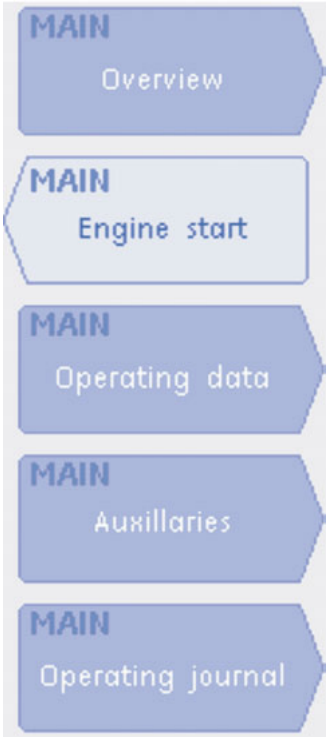

The third navigation level consists of the tabs. One screen may contain up to three tabs.

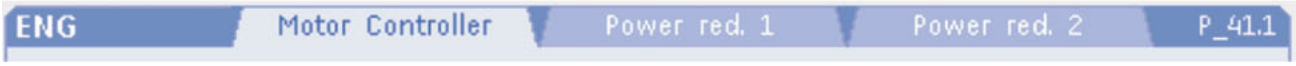

The international abbreviation of the main screen group again appears on the left-hand side.

You will find the descriptions of the individual tabs in the centre of this screen label. The currently selected tab is the same colour as the background of the actual screen content. Press the **TAB** key to switch between the individual tabs.

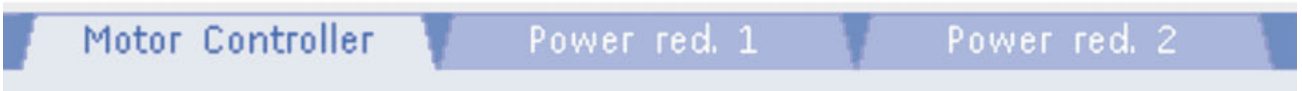

The screen number is displayed at the right-hand side of this bar.

The first character denotes the main screen selection group. The second character shows the currently selected subscreen. The character behind the decimal point provides information on the tab currently displayed.

GE Proprietary Information: CONFIDENTIAL! Use or disclosure of data contained on this sheet is subject to the restrictions on the cover or on the first page.

Screen content

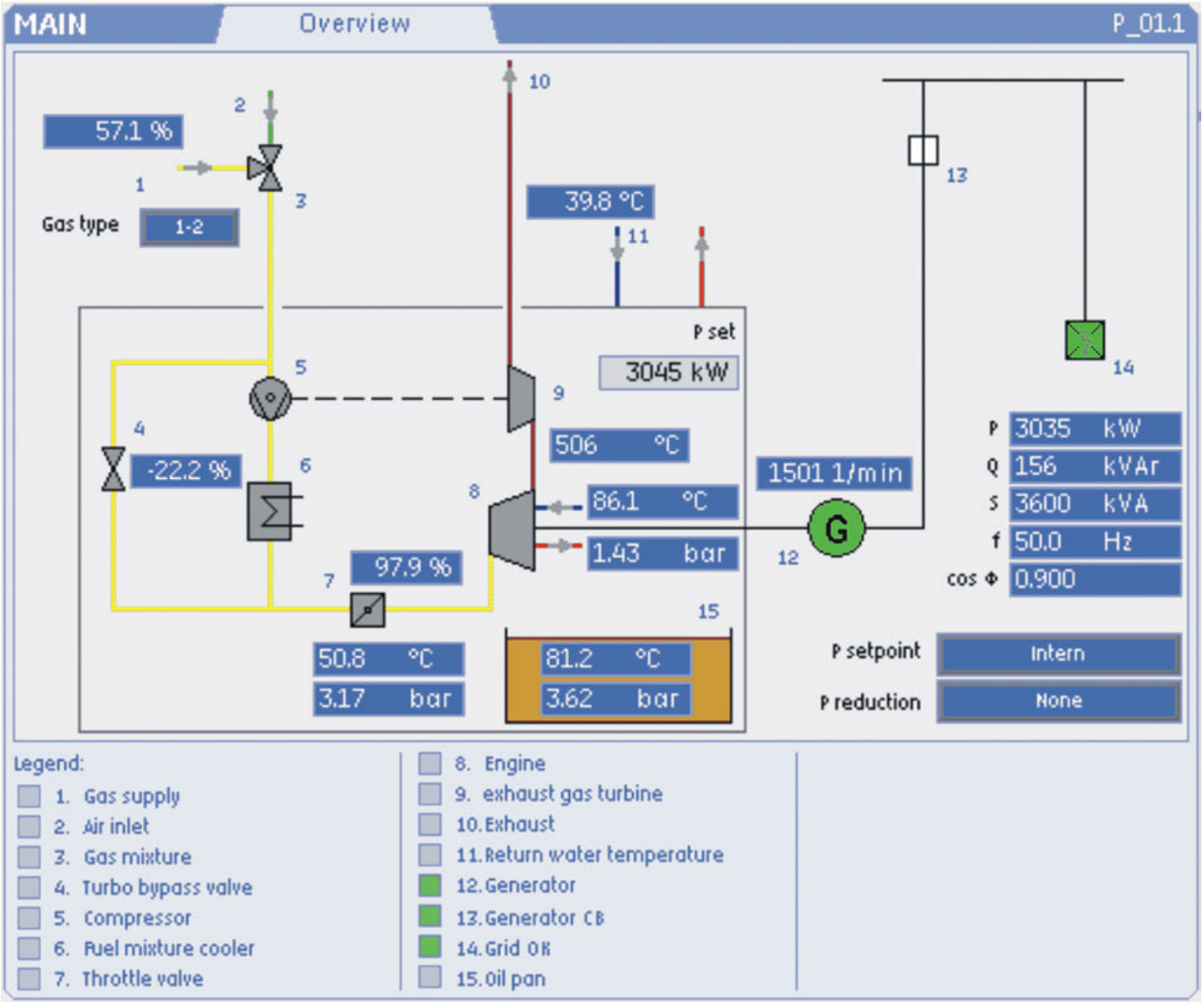

The screen content consists of inputs and outputs, graphics and animations. The individual elements are described in detail in the section on display elements.

The special feature of the customer view is that each graphic is provided with a key. A number in the screen refers to the corresponding entry in the key. There you can read the name of the corresponding part of the plant. A further simplification is a square symbol that indicates the status of the components.

6.2.3 Display in Expert View

The Expert View differs from the Customer View in the following respects:

- the status indication contains detailed information
- additional indications and inputs are displayed

GE Proprietary Information: CONFIDENTIAL! Use or disclosure of data contained on this sheet is subject to the restrictions on the cover or on the first page.

- additional screens are displayed
- Keys are not displayed

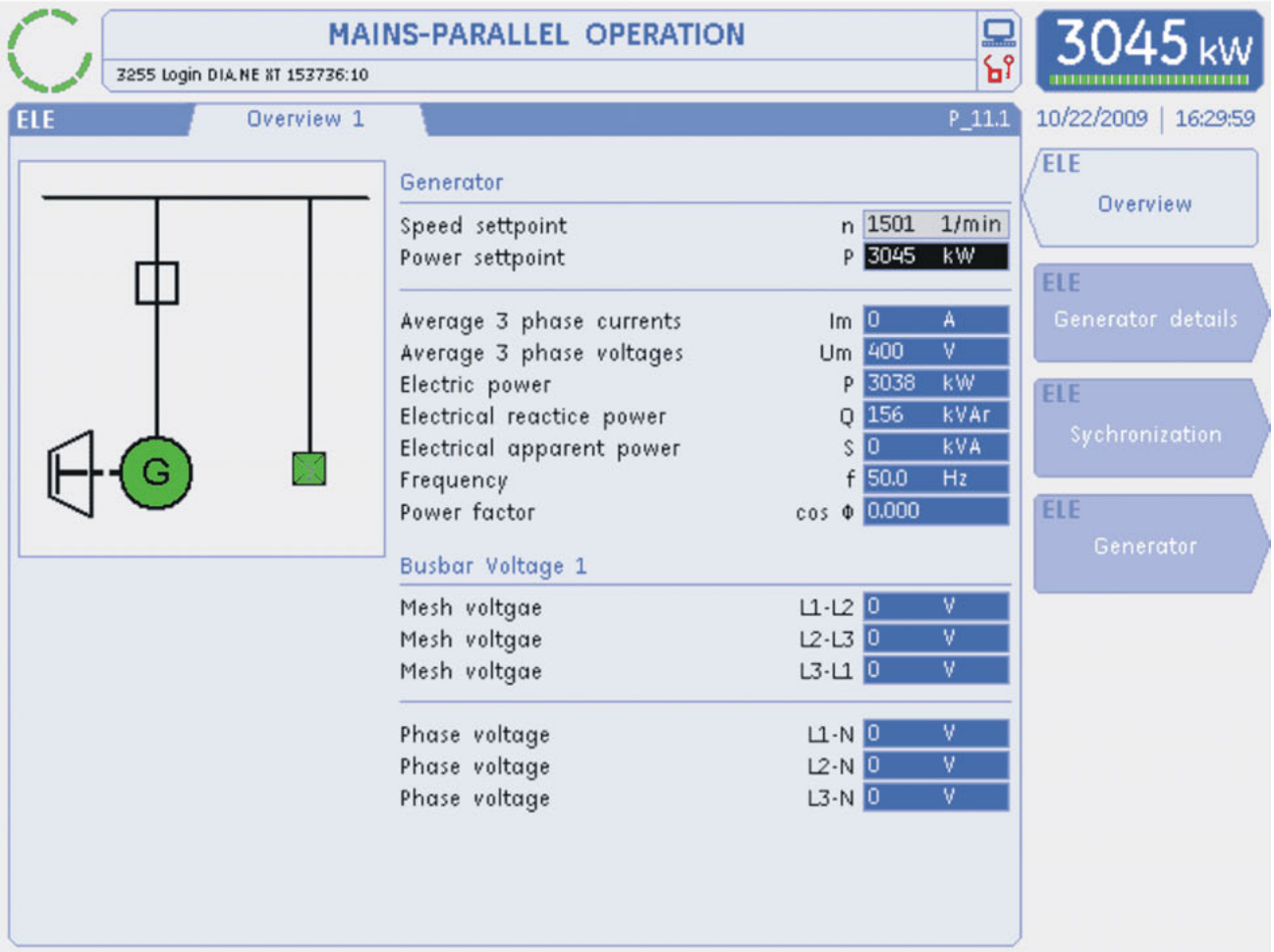

Status indication

In expert mode, detailed text is displayed in the status indication. If a user has logged on at customer level or higher, the last message entered in the alarm management system is also displayed.

GE Proprietary Information: CONFIDENTIAL! Use or disclosure of data contained on this sheet is subject to the restrictions on the cover or on the first page.

Additional indications and measured values

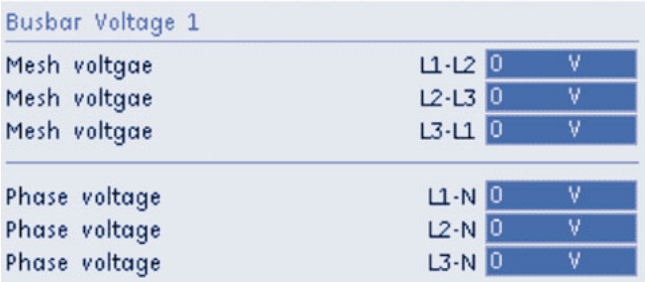

measured values which are only of secondary importance for operating the plant are only displayed in Expert View.

In the **ELE** overview screen, for example, the bus bar voltages are also displayed.

Additional screens

Screens containing detailed information which is likewise not of primary importance for operating the plant is only displayed in Expert View.

The Generator Details, Synchronization and Generator screens are additional displays in the **ELE** screen group.

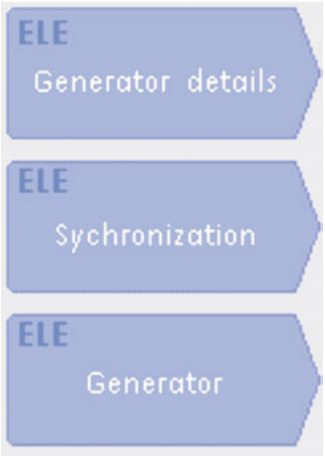

Keys

For reasons of space, no keys are displayed at all. The resulting blank areas are used to display additional information.

6.2.4 Display elements

Numerical input

Numerical values are output in black print on a blue background. In addition to the measured value, the unit appears on the right and on the left, where appropriate, an abbreviation of the measured quantity.

GE Proprietary Information: CONFIDENTIAL! Use or disclosure of data contained on this sheet is subject to the restrictions on the cover or on the first page.

If an entry field has a grey background, this means that your current user authorisation level does not allow you to adjust the value.

Focused entry

A white background around a numerical value or text display indicates that this is an entry field. A change in the colour of the print to white and the background to black means that the cursor has been focused on this position.

Text output/numerical output

Text output and numerical output are displayed in white print on a blue background.

Text selection

Text selection allows you to select a mode or option. It is characterised by a down arrow. Pressing the **ENTER** keys takes you to selection mode.

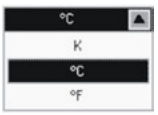

Use the plus or minus (**+**/**-**) keys to select the desired option.

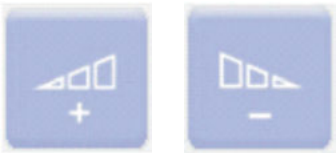

Press the Enter key again to confirm the selection. Press the **ESC** key or use the cursor keys to cancel selection mode.

Button function

Buttons that enable an action have black print on a white background. When the button is focused, the print colour changes from black to white and the background changes from white to dark grey.

If the print in the button is displayed in black and the background in light grey, this means that your user authorisation level does not allow you to adjust the value.

GE Proprietary Information: CONFIDENTIAL! Use or disclosure of data contained on this sheet is subject to the restrictions on the cover or on the first page.

Animated graphical symbol

The colour or shape of the symbol can change according to the operating condition. In general, green indicates an active condition and red indicates a fault.

Key

A key is displayed when Customer View is selected and the current screen contains a graphical representation.

The connection between the diagram and the text is established using ascending figures.

The indicator lights to the left of the items provide an overview of the status of the various elements. The different colours have the following meanings:

grey: There is no electrical response from the key item

white: The status of the element is "off" or "open".

green: The status of the element is "on" or "closed".

red: A fault has been detected.

Trend analyses

In many screens, a trend analysis will assist you to optimise the operation of the plant.

In principle, you cannot edit the trend lines. The only exception is the trend of the last shutdown. In this case, 4 out of 16 curves can be displayed.

The time axis is always preset.

GE Proprietary Information: CONFIDENTIAL! Use or disclosure of data contained on this sheet is subject to the restrictions on the cover or on the first page.

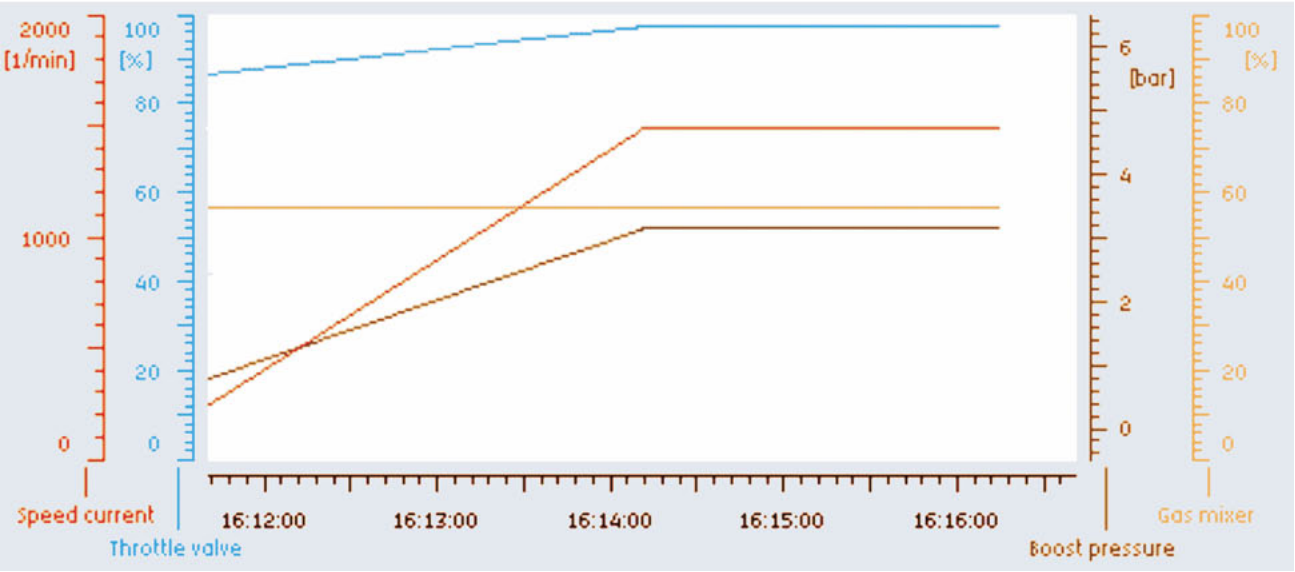

The scales, which are the same colour as the related trend curve, are located to the right and left of the display field.

7 Visualisation screens

All the screens that can be viewed by customers are described individually below. The description is based on Expert View. Where Customer View not only contains a reduced number of indications but also deviates in terms of display, the differences will be listed.

If engine parts are not displayed during visualisation, this means that it is an option. Where additional indications relating to this documentation are available locally, it is a customer-specific add-on.

Note: The screenshots of the visualisation screens have been created using customer level (10).

7.1 MAIN Plant Overview

The **MAIN** screen group contains a summary of the most important information for the engine operator. Electrical and hydraulic measurement data are displayed, as well as a number of counters.

7.1.1 Overview (P_01.1)

The Overview screen appears when you press the **MAIN** screen selection key. This screen contains a summary of the main measured and actuating variables and information on the current operating and switching condition of the module.

GE Proprietary Information: CONFIDENTIAL! Use or disclosure of data contained on this sheet is subject to the restrictions on the cover or on the first page.

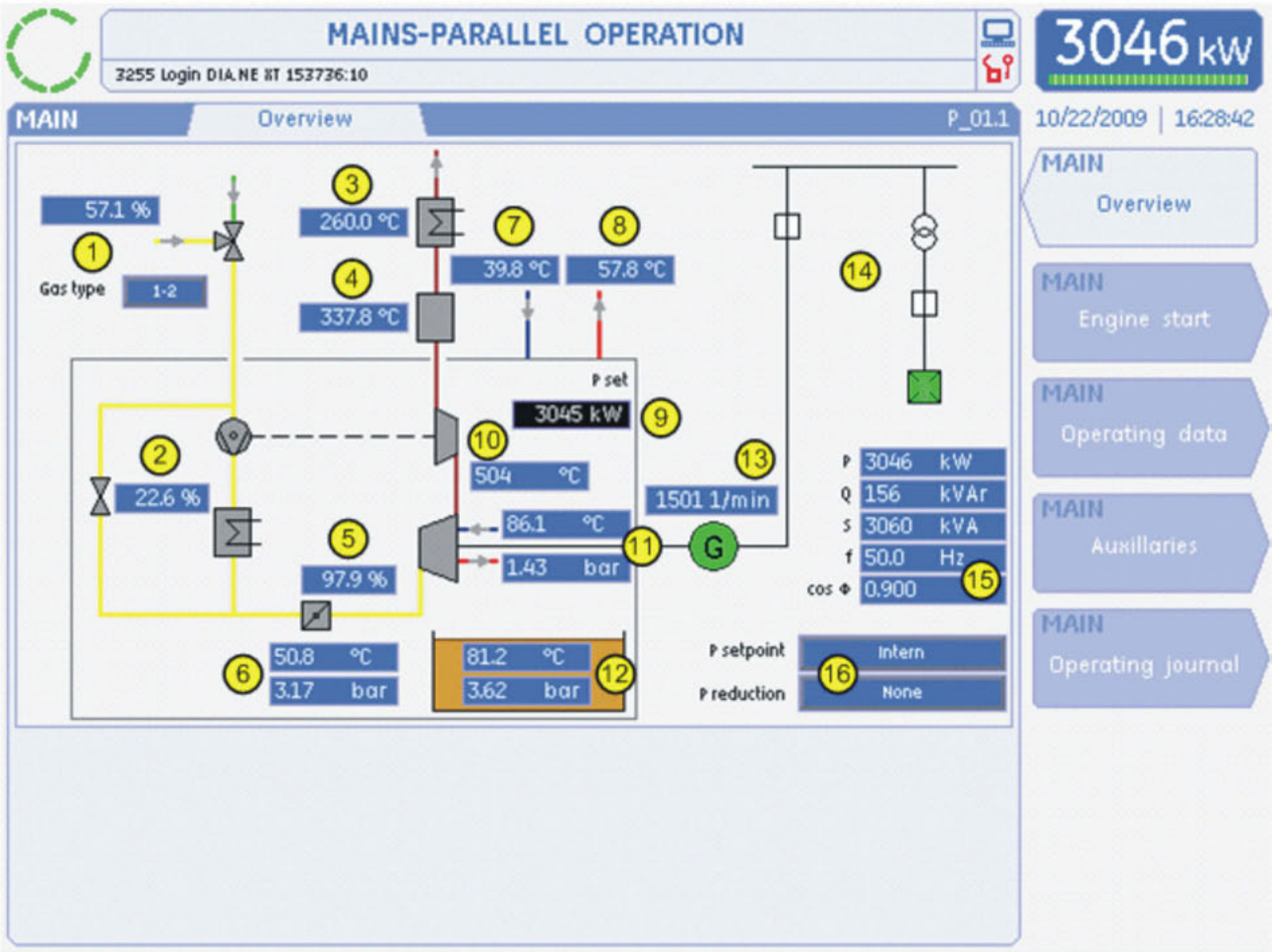

① Gas mixer / Gas proportioning valve

This is where details of the gas mixer and/or the gas proportioning valve are displayed, depending on the engine type and plant design.

Gas mixer:

The opening rate of the gas mixer is displayed as a percentage (see above screen).

Gas proportioning valve:

The lambda value of the gas proportioning valve is displayed.

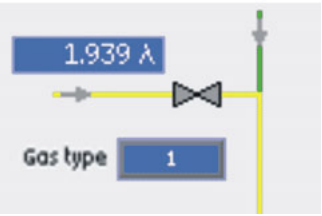

GE Proprietary Information: CONFIDENTIAL! Use or disclosure of data contained on this sheet is subject to the restrictions on the cover or on the first page.

Display showing the gas type

In addition, the current **Gas type** for each mixer variant is displayed. The following displays are possible, depending on the plant design:

Gas type	Description
1	Gas type 1
2	Gas type 2
3	Gas type 3
4	Gas type 4
1_2	Gas quality = interpolation between the gas 1 and 2 parameter sets
1_2/3	Gas type 1_2 (gas pressure control system 1) mixed with gas type 3 (gas pressure control system 2)
1/3	Gas type 1 (gas pressure control system 1) mixed with gas type 3 (gas pressure control system 2)

Other details of the gas mixture are displayed in the **Gas** screen group.

② Turbocharger bypass valve

Display showing the position of the turbocharger bypass valve (optional).

③ Waste heat boiler

Display showing the tube plate temperature (optional). The inlet and outlet temperatures are displayed in the **EXH** screen group.

④ Catalytic converter

Display showing the catalytic converter temperature (optional). The inlet and outlet temperatures are displayed in the **EXH** screen group.

⑤ Throttle valve

Display showing the throttle valve position.

⑥ Mixture temperature and boost pressure

Display showing the mixture temperature and the boost pressure (p2'). The display showing boost pressure upstream of the throttle valve (p2) is optional.

⑦ Return temperature

Display showing the return water temperature (optional).

⑧ Inlet temperature

Display showing the inlet water temperature (optional).

⑨ Power setpoint

It is necessary to have at least "Customer (10)" authorisation to adjust the power setpoint.

⑩ Average exhaust gas temperature / Turbocharger inlet temperature

Depending on the components on the engine, the average exhaust gas temperature or the turbocharger inlet temperature is displayed.

⑪engine cooling water

GE Proprietary Information: CONFIDENTIAL! Use or disclosure of data contained on this sheet is subject to the restrictions on the cover or on the first page.

Display showing the cooling water temperature and pressure. Details are displayed in the **HYD** screen group.

⑫ engine oil

Display showing the engine oil temperature and pressure. Details are displayed in the **HYD** screen group.

⑬ Speed

Display showing the engine speed.

⑭ Electrical diagram

The arrangement of the generator switch, mains switch and transformer varies and is designed for a specific plant.

Status of generator and mains switches:

Closed:

Open:

Mains status indication

In the event of mains failure, the mains status indication is white, otherwise it is green .

Mains O.K.:

Mains failure:

⑮ Electrical measurement data

Display showing electrical measurement data for the generator. Details are displayed in the **ELE** screen group.

Abbreviation	Description	Unit
P	Effective power	[Kilowatts]
Q	Reactive power	[Kilo-Volt-Ampere-reac-tive]
S	Apparent power	[Kilo-Volt-Ampere]
F	Frequency	[Hertz]
cos Φ	Power factor	[1]

⑯ Power set value and power reduction

GE Proprietary Information: CONFIDENTIAL! Use or disclosure of data contained on this sheet is subject to the restrictions on the cover or on the first page.

The following types of power (P) set values are available:

Power set value	Description
Internal	The power set value is determined on the basis of the power setpoint set by the operator. The power setpoint can be set in the Overview, Engine Controller Overview, LEANOX Controller and Power Controller screens.
External – analogue	The power set value is generated by an external analogue signal (4-20-mA). See "Power / Scaling external power setpoint" parameter.
External – bus	The power set value is created by a higher-order control system connected to DIA.NE XT via an industrial bus connection.

The following types of power (P) reduction are possible:

Power reduction	Description
None	No power reduction is in effect.
Knock	The knocking intensity has exceeded the limit value for power reduction.
Misfiring	The number of misfires has exceeded the limit value for power reduction.
External – analogue	Power reduction due to an external analogue signal. This signal can be used for a variety of applications (e.g. to control return water temperature). See "Power / Scaling external power limitation" parameter.
External – bus	The power reduction is caused by a higher-order control system connected to DIA.NE XT via an industrial bus connection.
Mixture temperature	The mixture temperature has exceeded the limit value for power reduction. The power setpoint is reduced linearly. See "Power / Mixture temperature reduction" parameter.
Maximum power	The pre-set power setpoint has exceeded the rated power related to the gas type and is limited to the latter. See "Power / Rated values" parameter.
Minimum power	The pre-set power setpoint has fallen below the minimum permissible power setpoint and is limited to the latter. See "Power / Rated values / Minimum power" parameter.
Exhaust gas temperature	If the cylinder temperature ("Exhaust temp. positive/negative deviation max.") deviates from the average value for more than 30 seconds, a power reduction is activated.
LEANOX	The LEANOX controller deviation limit value has been exceeded towards "lean". The power setpoint is reduced linearly. If the LEANOX controller deviation limit value is exceeded by than 20 percent towards "rich", the engine is switched off. See "LEANOX / Gas type x / Controller / Controller deviation limit" parameter
Intake temperature	The intake temperature has exceeded the limit value for power reduction. The power setpoint is reduced linearly. See "Power / Intake air reduction" parameter.
CH4	If the CH4 content of the gas is decreasing, the power is reduced in accordance with an external signal (4-20mA). See "Special gas / CH4 content" parameter.
Gas pressure	If the gas pressure is decreasing, the power is reduced in accordance with an external signal (4-20mA). See "Special gas / Gas pressure" parameter.

GE Proprietary Information: CONFIDENTIAL! Use or disclosure of data contained on this sheet is subject to the restrictions on the cover or on the first page.

Power reduction	Description
Suction pressure	If the suction pressure (compressor intake pressure, e.g. on a landfill site) is decreasing, the power is reduced in accordance with an external signal (4-20mA). See "Special gas / Suction pressure" parameter.
Turbocharger speed	If one of the two "switching point maximum speed" limits (exhaust gas/turbocharger A or B) is exceeded, the power is reduced accordingly depending on the parameter "Value for P reduction" (power/turbocharger speed reduction).
Undervoltage	If the generator voltage is less than the adjustable limit level of the nominal generator voltage, power reduction begins.
Overvoltage	If the generator voltage exceeds an adjustable limit level of the nominal generator voltage, power reduction begins.
Underfrequency	If the generator frequency is less than an adjustable limit level, power reduction begins.
Overfrequency	If the generator frequency exceeds an adjustable limit level of the nominal generator frequency, power reduction begins. Power reduction only ends when the difference from the nominal frequency is again very small (hysteresis window).
Gen. winding temp.	If the generator winding temperature exceeds an adjustable limit level, power reduction begins.
Cooling-water temperature	If the jacket water temperature rises, power is reduced. See "Power / Jacket water temperature reduction" parameter.
Oil temperature	If the oil temperature rises, power is reduced. See "Power / Oil temperature reduction" parameter.
Return temperature	If the hot water return temperature rises, power is reduced. See "Power / Return water temperature reduction" parameter.
Pre-combustion chamber gas pressure	If the pressure in the pre-combustion chamber gas train decreases, power is reduced. See "Power / Pressure pre-chamber gas train reduction" parameter.

The most effective power reduction is displayed. Further details are displayed in the "Engine Controller Power Reductions" screen.

Additionally, a reactive energy reduction can take place. This is not displayed in this screen, however, but only as an operational notification in the alarm management:

Reactive energy reduction	Description
Gen. winding temp.	If the generator winding temperature exceeds an adjustable limit level, reactive energy reduction begins.
Pole wheel angle	If the capacitive reactive energy exceeds a certain value calculated on the basis of the pole wheel angle, the reactive energy is limited.

7.1.2 Engine Startup Assistant (P_02.1)

The Engine Startup Assistant screen appears when you press the **MAIN** screen selection key, followed by **F2**. The main measured and actuating variables for starting the gas engine are listed on this screen. A trend analysis is also provide a better diagnosis of control processes.

GE Proprietary Information: CONFIDENTIAL! Use or disclosure of data contained on this sheet is subject to the restrictions on the cover or on the first page.

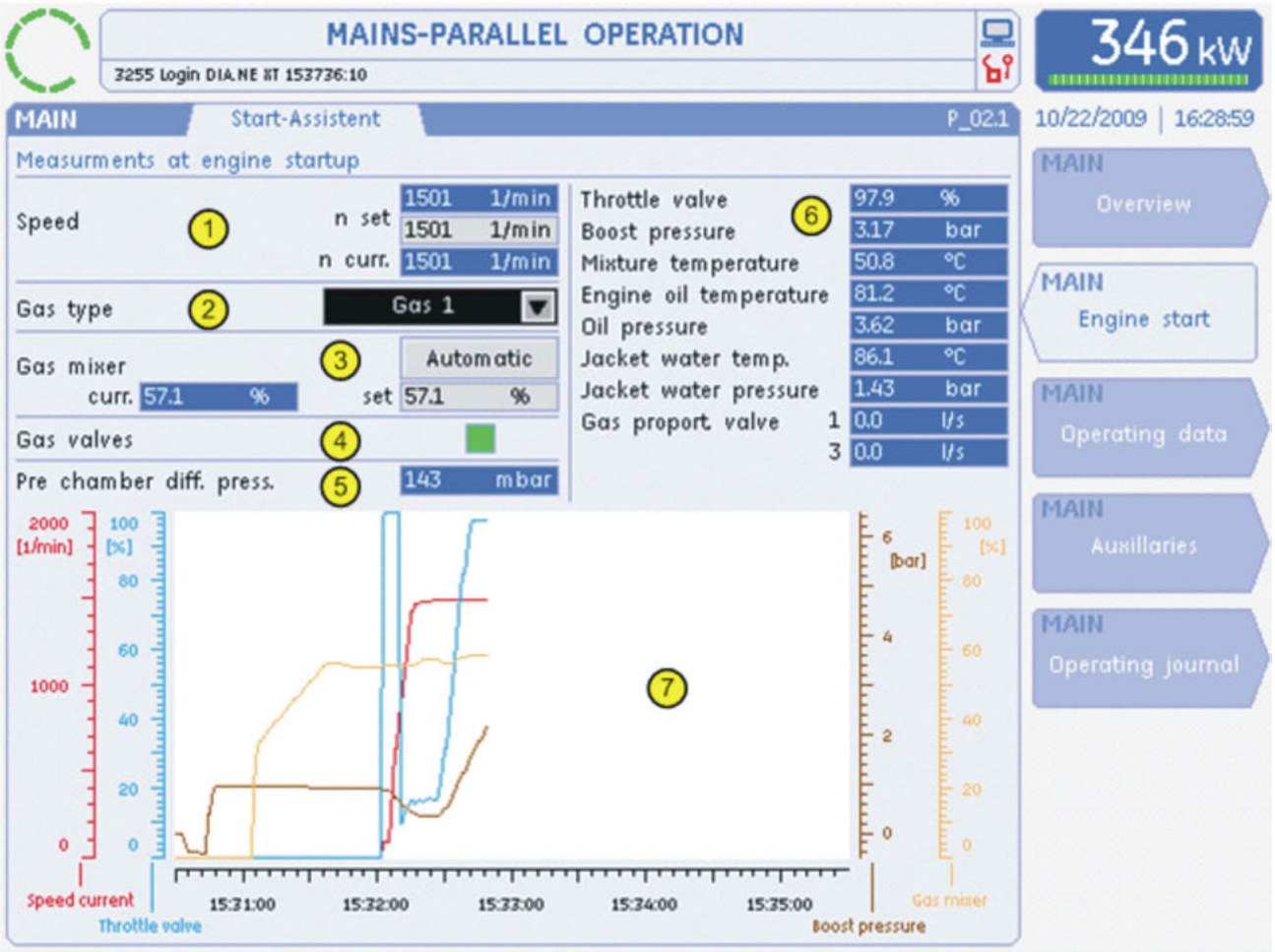

① Speed data

This indication displays the current setpoint value for the speed controller, the manual setpoint value and the measured actual value one below the other. The speed can only be adjusted in idle mode.

② Setpoint value for gas type

You can select the desired gas type from a text drop down menu.

③ Gas mixing

Either the setpoint values for gas mixers or gas proportioning valves are displayed here, depending on the engine configuration.

In addition, you can press the button to switch gas mixing to manual in order to adjust the setpoint value directly. If your authorisation level is "Customer (10)", you can already adjust the setpoint value in idle mode.

④ Gas valve activation

The "open" command for the gas valves is visualised by a green indicator light.

⑤ Pre-combustion chamber gas differential pressure

GE Proprietary Information: CONFIDENTIAL! Use or disclosure of data contained on this sheet is subject to the restrictions on the cover or on the first page.

Optionally, the pre-combustion chamber gas differential pressure is displayed here. If the differential pressure is absent or too high, the engine is difficult or impossible to start.

⑥ Additional measured values

A series of additional measured values is displayed here, depending on the engine configuration. These measured values can be used to diagnose startup problems.

⑦ Trending

The trend analysis is intended to show changes in the engine control system in graphical form. The speed, throttle valve, boost pressure and gas mixing measurement data (% open or lambda) are displayed.

7.1.3 Operational Data (P_02.1)

The Operational Data screen appears when you press the **MAIN** screen selection key, followed by **F3**. It is used to visualise general module data such as counter readings and various measured values.

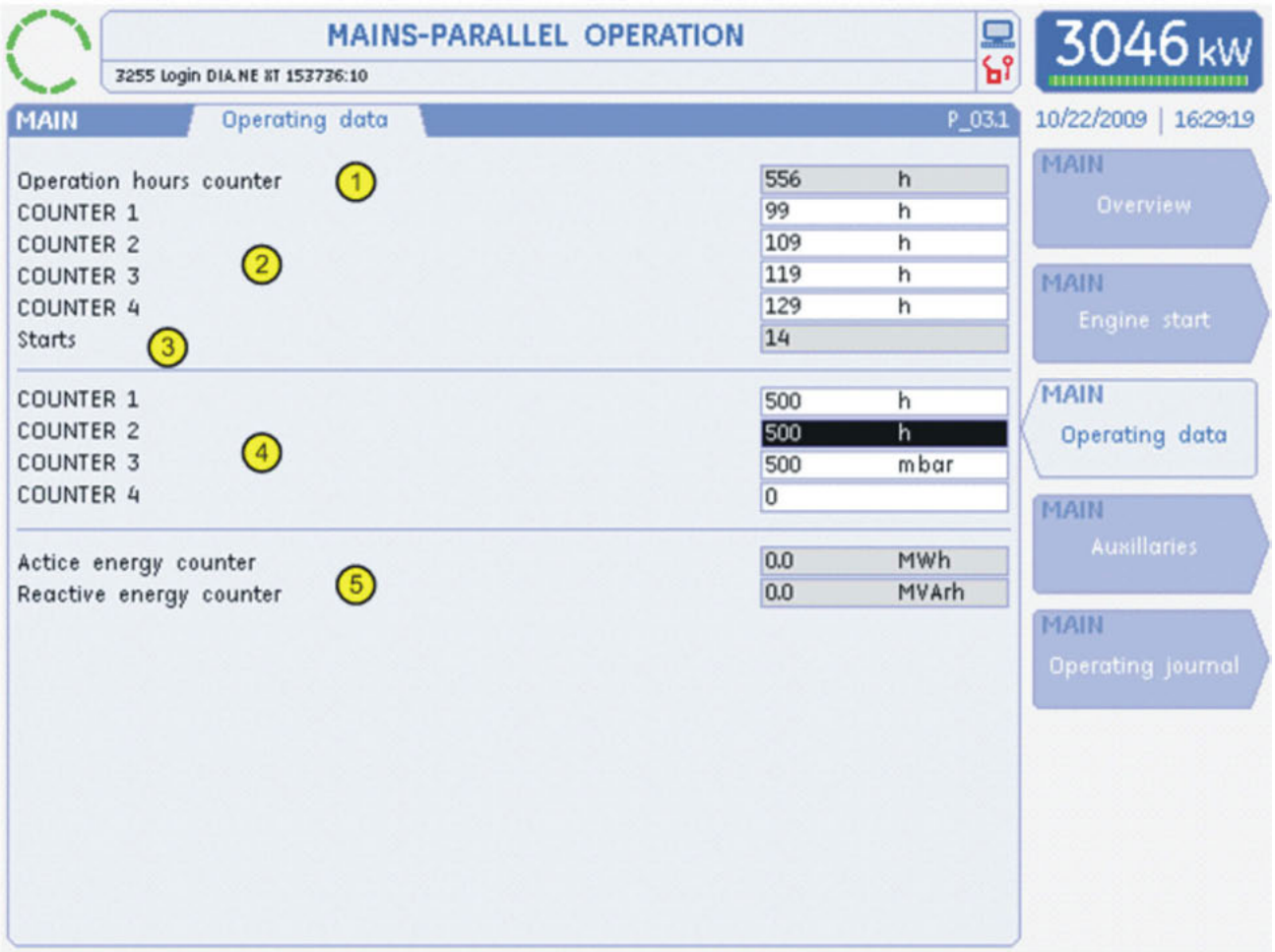

① Operating hour counter

Count of the number of hours for which the machine has been operating.

GE Proprietary Information: CONFIDENTIAL! Use or disclosure of data contained on this sheet is subject to the restrictions on the cover or on the first page.

② Maintenance counter

A number of maintenance operations are required to keep the machine in good running order (e.g. oil change). Four separate maintenance counters are used to generate warnings as a reminder that a maintenance operation is due. The count is displayed in hours and is reduced by one hour after each hour of operation. The counter is reset once maintenance has been completed. If the maintenance interval is for example 1000 operating hours, the number 1000 is entered.

③ Start counter

Counter that counts the number of completed starts.

④ Reserve counter

The four reserve counters can be supplied to customers as an option, for totalling quantities specific to their plant. They are included in the application as ordered.

⑤ Active and reactive energy counter

The active energy counter is used to total the amount of active energy produced by the engine.

The reactive energy counter totals the amount of reactive energy. The generator always tries to calculate and set the optimum power factor (cos Phi).

7.1.4 Auxiliaries 1 (P_04.1)

The Auxiliaries screen appears when you press the **MAIN** screen selection key, followed by **F4**. It is used to visualise switching conditions and analogue measurement quantities of auxiliaries required for engine operation.

GE Proprietary Information: CONFIDENTIAL! Use or disclosure of data contained on this sheet is subject to the restrictions on the cover or on the first page.

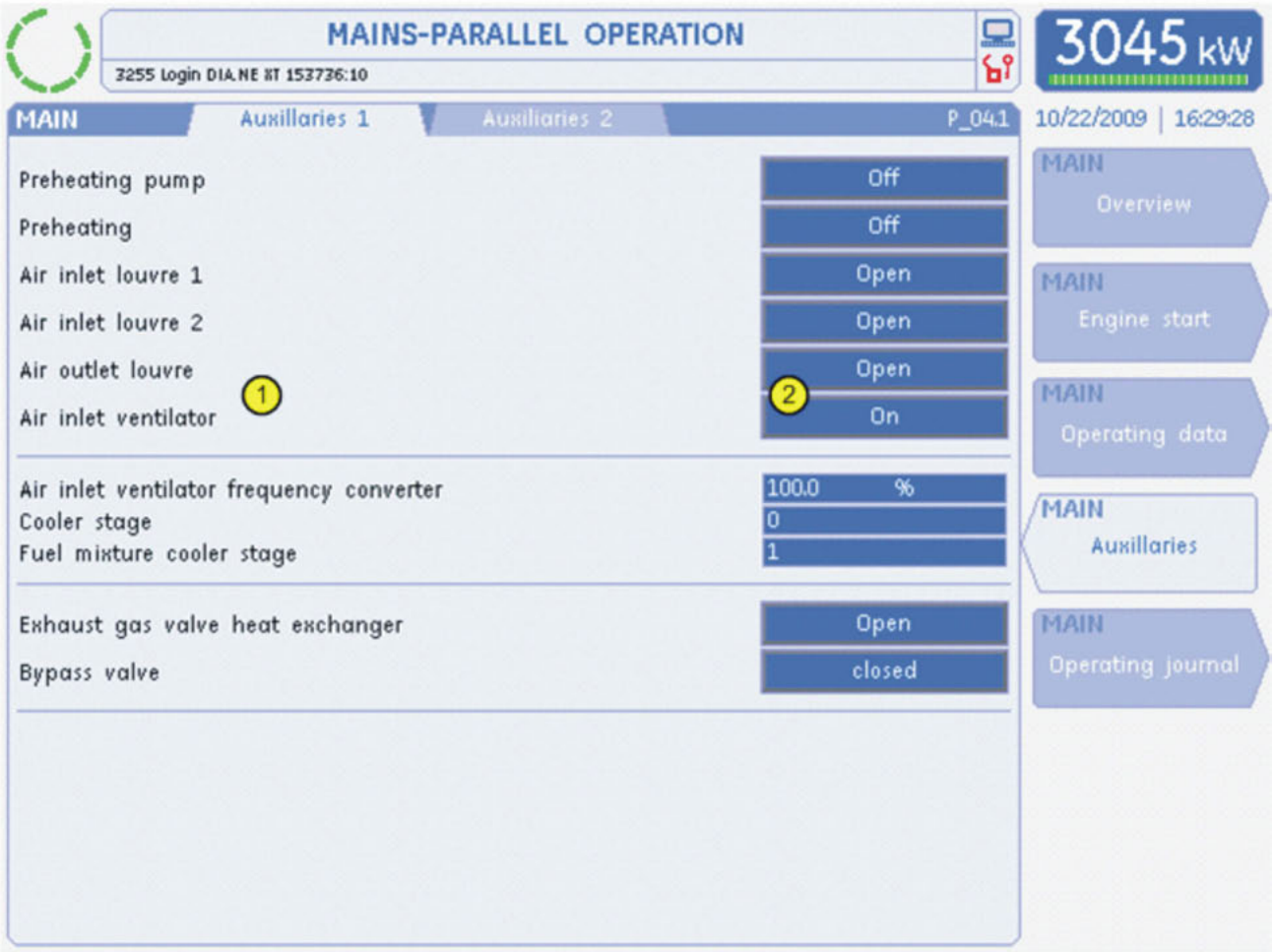

① **Auxiliary equipment description**

Depending on the configuration of the auxiliary equipment different screens can be shown here.

② **Auxiliary equipment status screen**

The condition of the individual auxiliaries is displayed here or shown as analogue values.

7.1.5 Auxiliaries 2 (P_04.2)

The Auxiliaries screen appears when you press the **MAIN** screen selection key, then **F4**, followed by the **TAB** key. It is used to visualise other switching conditions and analogue measurement quantities of auxiliaries required for engine operation.

GE Proprietary Information: CONFIDENTIAL! Use or disclosure of data contained on this sheet is subject to the restrictions on the cover or on the first page.

① **Auxiliary equipment description**

Depending on the configuration of the auxiliary equipment different screens can be shown here.

② **Auxiliary equipment status screen**

The condition of the individual auxiliaries is displayed here or shown as analogue values.

7.1.6 Operational Logbook 1 (P_05.1)

The Operational Data screen appears when you press the **MAIN** screen selection key, followed by **F5**. The measurement data to be entered in the operational logbook are provided here in summarised form.

GE Proprietary Information: CONFIDENTIAL! Use or disclosure of data contained on this sheet is subject to the restrictions on the cover or on the first page.

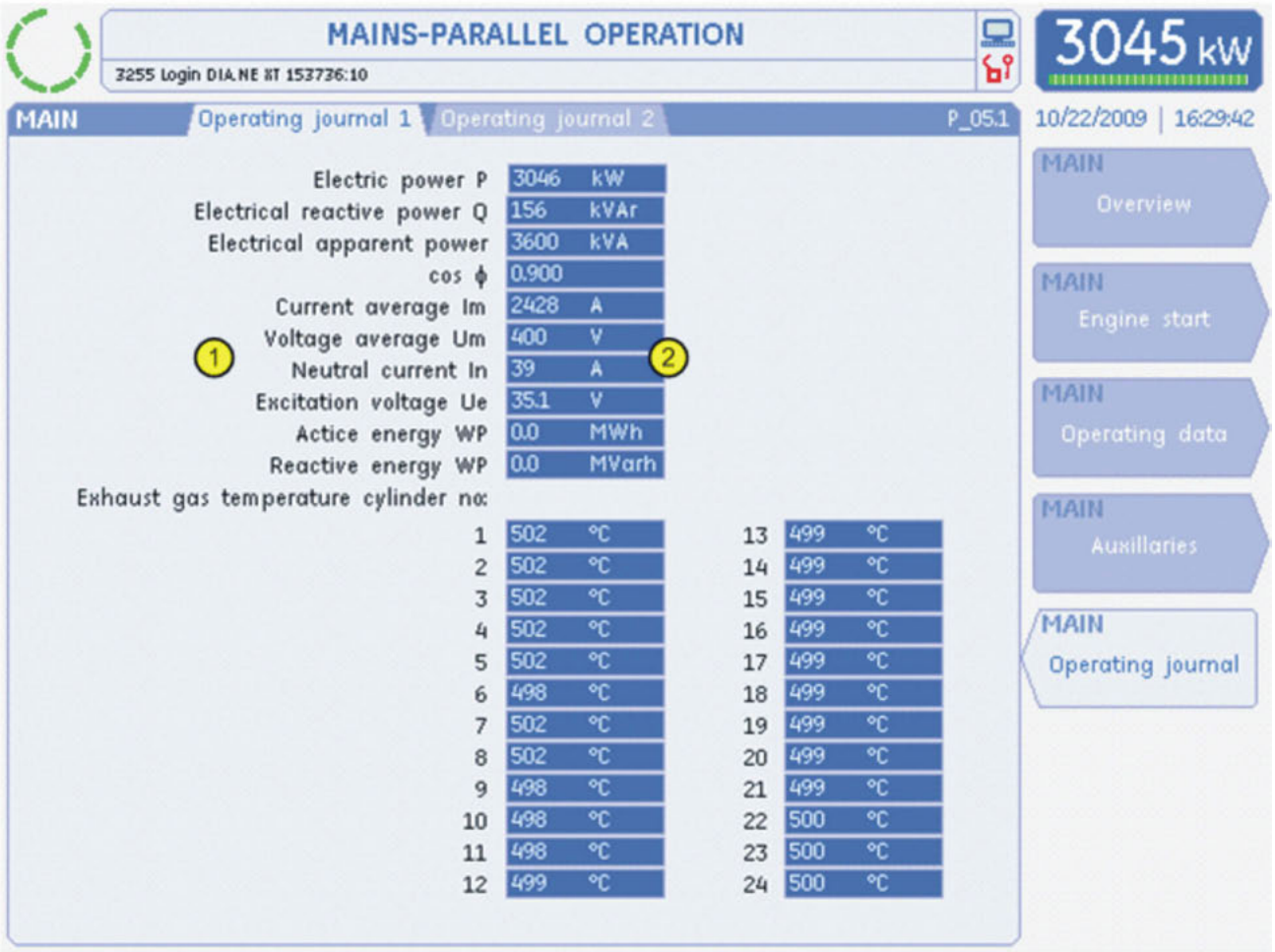

① **Description of record entry**

Depending on the engine configuration, various indications can be activated here which are to be copied to the operational logbook.

② **Measurement data displays**

The measurement data to be recorded can be read on the right of the plain text display.

7.1.7 Operational Logbook 2 (P_05.2)

The Operational Data screen appears when you press the **MAIN** screen selection key, then **F5**, followed by the **TAB** key. The data to be entered in the operational logbook are provided here in summarised form.

GE Proprietary Information: CONFIDENTIAL! Use or disclosure of data contained on this sheet is subject to the restrictions on the cover or on the first page.

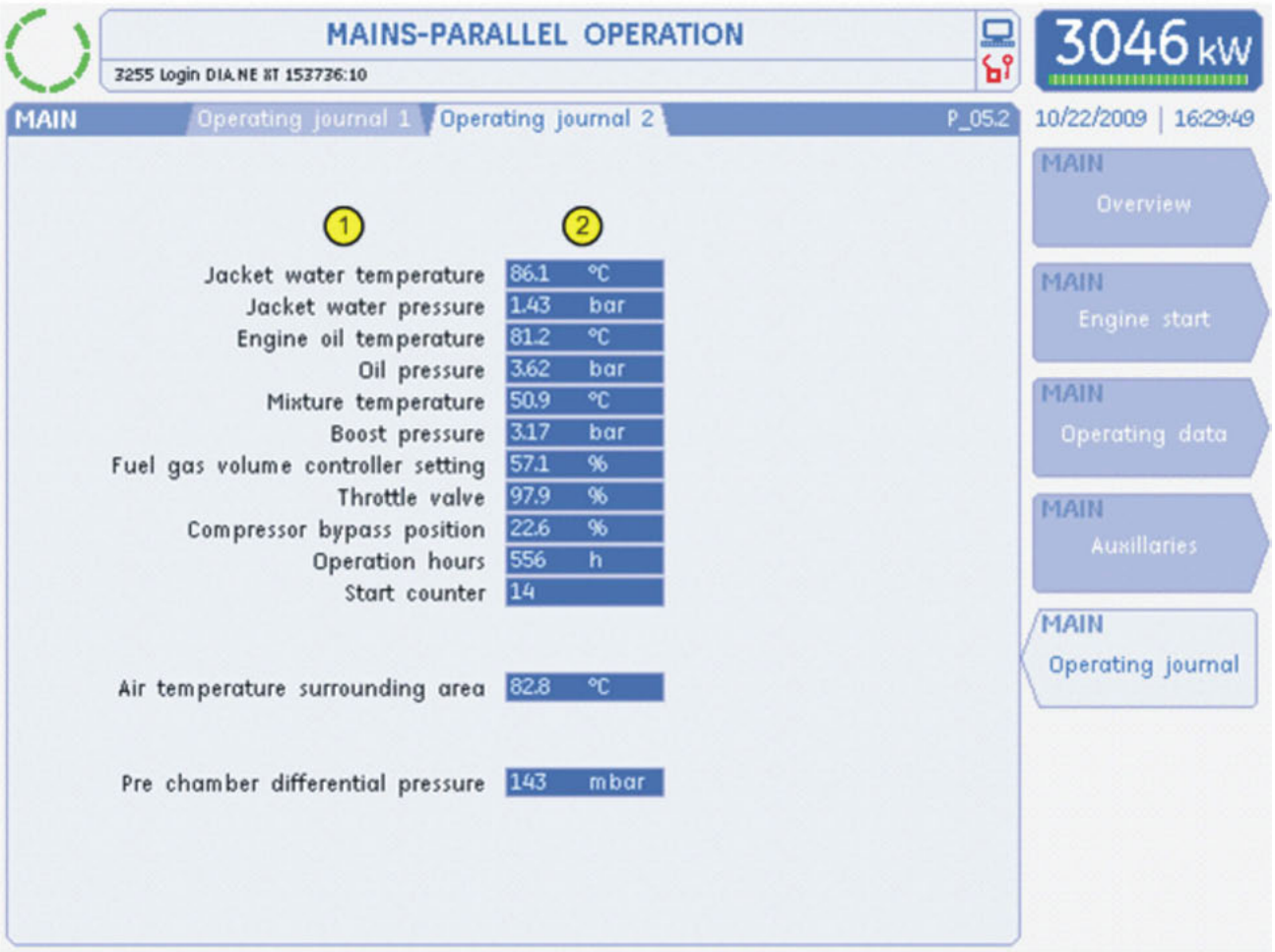

① Description of record entry

Depending on the engine configuration, various indications can be activated here which are to be copied to the operational logbook.

② Data displays

The data to be recorded can be read on the right of the plain text display.

7.2 Electrical Diagram (ELE)

The **ELE** screen group contains a summary of information on the electrical system and in particular on the generator. Details of electrical data, synchronisation, the generator control system and temperature measuring points are displayed.

Note: Only the Overview (P_11.1) screen is displayed in Customer View.

GE Proprietary Information: CONFIDENTIAL! Use or disclosure of data contained on this sheet is subject to the restrictions on the cover or on the first page.

7.2.1 Overview (P_11.1)

The Overview screen appears when you press the **ELE** screen selection key. This screen displays the main electrical measured quantities, as well as operating and switching conditions.

Note: Customer View does not show the indications for bus bar voltages ⑧ and ⑨.

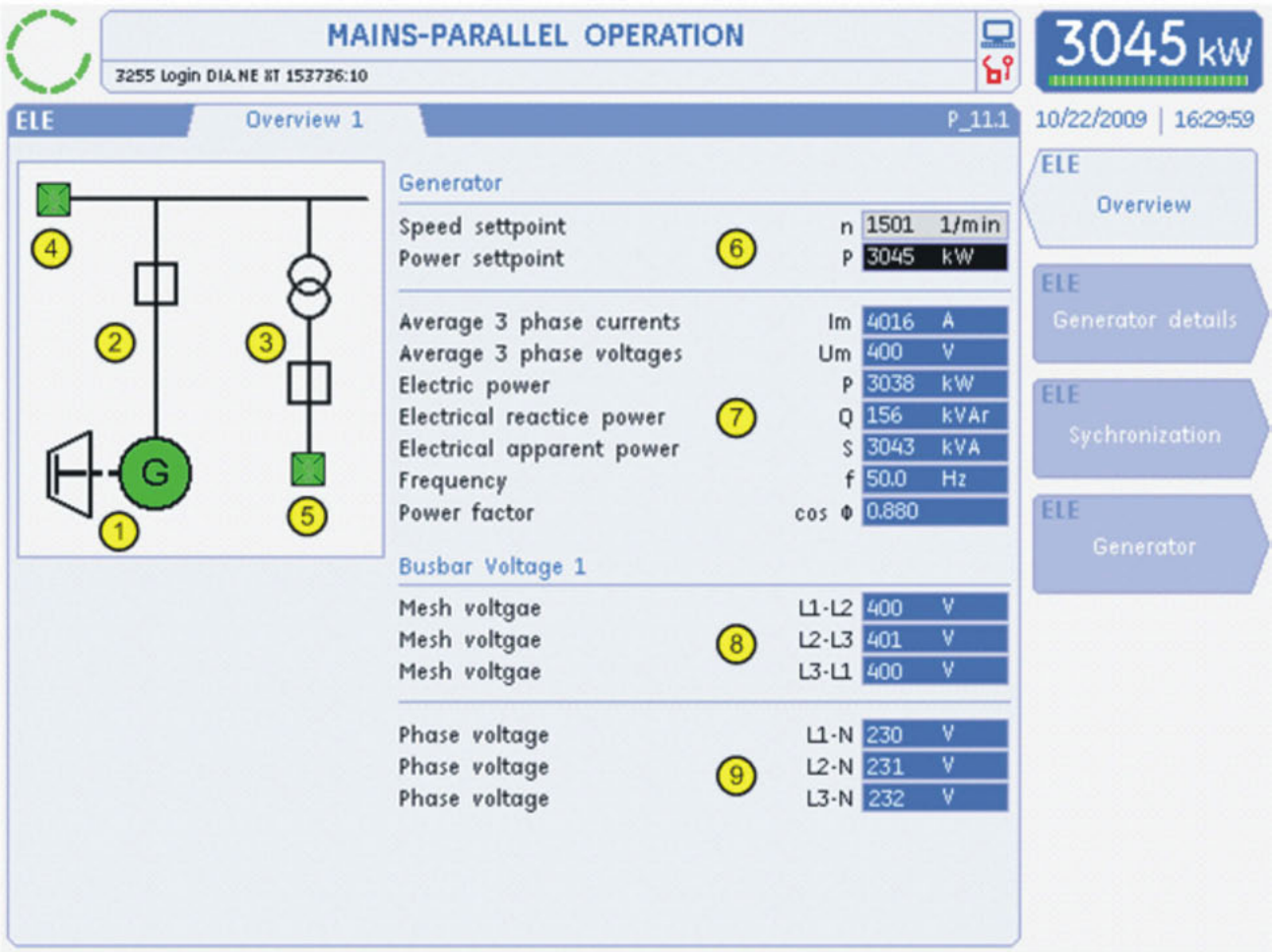

① **Generator or engine indication**

Ten seconds after the starting speed is reached, the display changes colour from white to green.

② **Generator switch branch**

The switching condition of the generator switch is displayed:

open

closed

An optional transformer can also be displayed in the generator switch branch. This symbol is not animated (no colour change).

Transformer

GE Proprietary Information: CONFIDENTIAL! Use or disclosure of data contained on this sheet is subject to the restrictions on the cover or on the first page.

③ Mains branch

Optionally, the switching condition of the mains switch is displayed:

open

closed

An optional transformer can also be displayed in the mains branch. This symbol is not animated (no colour change).

Transformer

④ Bus bar status identification

If the voltage values of the bus bar are OK, a green mains symbol is displayed. In the event of a malfunction the symbol appears black and white.

Bus bar voltage is O.K.

Bus bar voltage error

⑤ Mains status indication

If the mains status is OK, a green mains symbol is displayed. In the event of a malfunction the symbol appears black and white.

Mains voltage is O.K.

Mains voltage error

⑥ Entering speed and power setpoint

Speed setpoint n

When the generator switch is open, the entry field is visible and the engine speed setpoint can be altered. The engine speed setpoint value can be entered from User Level customer (10) upwards.

Power setpoint P

Here you can alter the power setpoint value, unless another type of power setting has been installed. The power setpoint value can be entered from User Level customer (10) upwards.

⑦ Electrical measurement

Display showing electrical data for the generator.

Abbreviation	Description	Unit
Im	Current average value, 3 phases	[Ampere]
Um	Voltage average value, 3 phases	[Volt]
P	Effective power	[Kilowatts]
Q	Reactive power	[Kilo-Volt-Ampere-reactive]
S	Apparent power	[Kilo-Volt-Ampere]

GE Proprietary Information: CONFIDENTIAL! Use or disclosure of data contained on this sheet is subject to the restrictions on the cover or on the first page.

Abbreviation	Description	Unit
f	Frequency	[Hertz]
cos Φ	Power factor	[1]

⑧ Bus bar voltage interlinked

Optionally, the three interlinked bus bar voltages L1-L2, L2-L3 and L3-L1 are displayed.

⑨ Bus bar voltage per phase

Optionally, the three bus bar voltages in phases L1, L2 and L3 are displayed in relation to the neutral conductor.

7.2.2 Generator Details 1 (P_12.1)

The Generator Details 1 screen appears when you press the **ELE** main screen selection key, followed by **F2**. The electrical data for the generator are displayed on this screen.

Note: This screen is only displayed in Customer View. Optionally, details of another measuring point can be shown on a second tab (P_12.2).

① Animated switching condition diagram

GE Proprietary Information: CONFIDENTIAL! Use or disclosure of data contained on this sheet is subject to the restrictions on the cover or on the first page.

An explanation of the individual symbols can be seen in the Overview (P_11.1) screen.

② Generator voltage interlinked

Optionally, the three interlinked generator voltages L1-L2, L2-L3 and L3-L1 are displayed.

③ Generator voltage per phase

Optionally, the three generator voltages in phases L1, L2 and L3 are displayed in relation to the neutral conductor N.

④ Dynamic pulsation amplitude of phase currents

The maximum value of the current pulsation amplitude is displayed as a percentage so that the smooth running of the engine can be assessed while in mains-parallel operation. This peak-value memory has a decaying time constant and should ideally display the lowest possible value.

⑤ Generator excitation voltage

The generator excitation voltage is displayed in volts.

⑥ Detailed electrical power indication

The current electrical power is displayed in kilowatts. In addition, a special display field is used to display the maximum value for this measured quantity. The value is always reset when the generator switch is actuated.

⑦ Detailed phase current indication

The three current phase currents are displayed in amperes. In addition, special display fields are used to display the maximum values for the currents. The values are always reset when the generator switch is actuated.

⑧ Detailed neutral conductor current indication

The current neutral conductor current is displayed in amperes. In addition, a special display field is used to display the maximum value for the neutral conductor current. The value is always reset when the generator switch is actuated.

7.2.3 Synchronisation (P_13.1

The Synchronisation screen appears when you press the **ELE** screen selection key, followed by **F3**. A synchronoscope, with all the measured values required for synchronisation, is displayed on this screen.

Note: This screen is only displayed in Customer View. Optionally, details of another synchronisation can be shown on a second tab (P_13.2).

GE Proprietary Information: CONFIDENTIAL! Use or disclosure of data contained on this sheet is subject to the restrictions on the cover or on the first page.

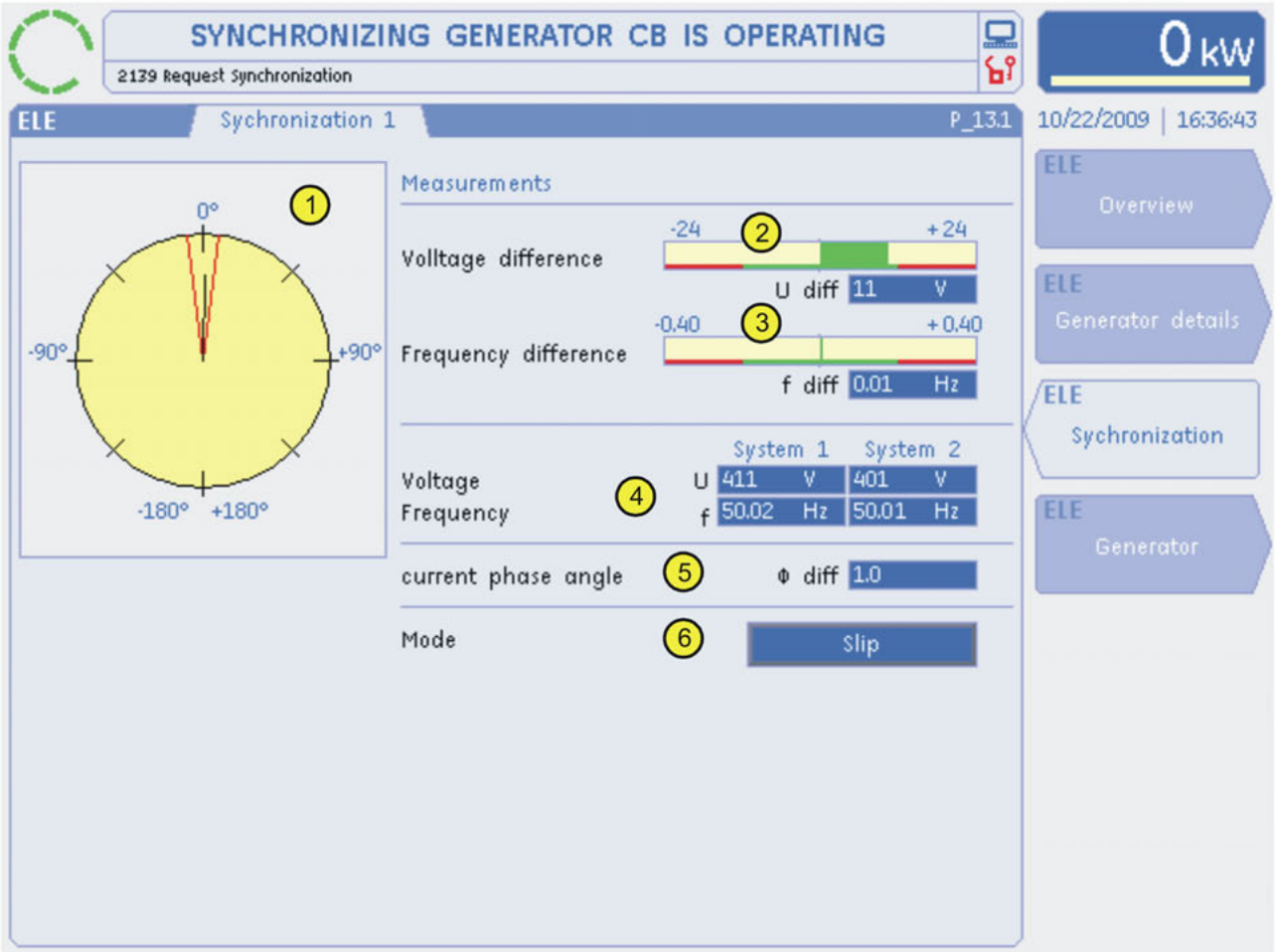

① Synchronoscope

The synchronoscope is used to display the changes in phase position during the synchronisation process. The position of the pointer corresponds to the numerical value of **Φ diff**. The value is displayed from -180 to +180 degrees.

The synchronoscope pointer indicates the current phase position. The lower the differential frequency the more slowly the pointer moves.

GE Proprietary Information: CONFIDENTIAL! Use or disclosure of data contained on this sheet is subject to the restrictions on the cover or on the first page.

Permissible activation range

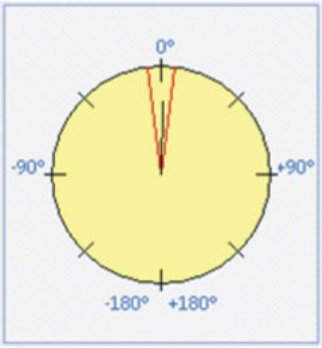

This activation condition is satisfied if the synchronisation pointer is within the permissible phase position.

Engine speed deviation

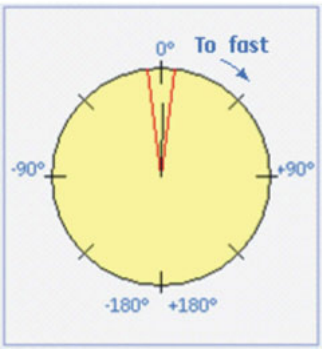

The messages **Too Fast** and **Too Slow** are shown as an additional aid.

The display appears as soon as the permissible differential frequency is exceeded.

Synchronisation completed

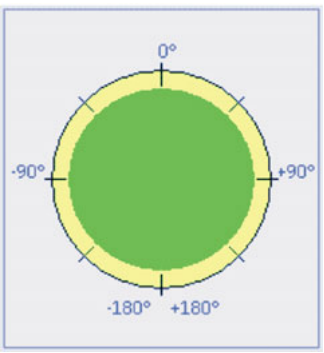

Synchronisation will be finished upon receipt of the power switches response. This status is displayed using a green disc. In this way, it is possible to check whether the control system is trying to close the switch.

GE Proprietary Information: CONFIDENTIAL! Use or disclosure of data contained on this sheet is subject to the restrictions on the cover or on the first page.

Deviation from measured value in synchronised condition

Deviations may occur in the measured values because of errors in the measurement accuracy tolerance, despite the fact that the systems are electrically linked.

② **Voltage difference**

The current voltage difference **U diff** between the two networks to be synchronised (U diff = U System 1 - U System 2) is displayed.

③ **Frequency difference**

The current frequency difference **f diff** between the two networks to be synchronised (f diff = f System 1 - f System 2) is displayed.

④ **Comparing two electrical systems**

Electrical System 1

The entry **System 1** lists the current voltage and frequency of electrical system 1. System 1 is activated at the X4 terminals of the multi-measurement converter. The voltage closer to the generator is displayed here during the synchronisation procedure.

Examples:

The generator voltage is connected here during the synchronisation of the generator switch.

The bus bar voltage is connected here during the synchronisation of the mains switch.

Electrical System 2

The entry **System 2** lists the current voltage and frequency of electrical system 2. System 2 is activated at the X6 terminals of the multi-measurement converter. The voltage closer to the mains is displayed here during the synchronisation procedure.

Examples:

The bus bar or mains voltage is connected here during the synchronisation of the generator switch.

The mains voltage is connected here during the synchronisation of the mains switch.

⑤ **Phase angle**

The current phase angle between the networks to be synchronised **Φ diff** (-180° to +180°) is displayed.

⑥ **Synchronisation mode**

There are three ways in which synchronisation can be performed:

Inactive

No function has been selected or synchronisation has already been completed

Slip

The following applies to the generator and synchronisation voltage:

50% < U < 125% of rated voltage UN
80% < f < 110% of rated frequency fN

The generator voltage is adjusted to the synchronisation voltage in terms of amplitude and frequency. The switch command is designed and executed in advance to take account of the parameterised phase angle, a preset trans-

GE Proprietary Information: CONFIDENTIAL! Use or disclosure of data contained on this sheet is subject to the restrictions on the cover or on the first page.

former connection circuit and the switch response time so that the main contacts of the power switch are closed at the point of synchronisation.

Synchronisation takes place subject to the following conditions:

- The "Select synchronisation" command is set in the software
- The parameterised limit for voltage difference has been maintained (dUmax)
- The parameterised limits for frequency difference have been maintained (dfmax and dfmin)
- The parameterised limit for the phase angle (including transformer connection circuit) has been maintained (dalpha)

If all the conditions have been satisfied, the activation output changes its condition from LOW to HIGH. When the parameterised pulse period has ended, it switches back from HIGH to LOW.

Synchro Check

In this operating mode the device can be used as a synchronisation control.

The "Close LS" relay remains attached as long as the following conditions are satisfied:

- The "Start synchro check" command is set in the software
- The parameterised limit for voltage difference has been maintained (dUmax)
- The parameterised limits for frequency difference have been maintained (dfmax and dfmin)
- The parameterised limit for phase angle has been maintained (phimax)

The activation output remains set so long as all the conditions are satisfied.

Dead bus

The activation command for the power switch is issued without synchronisation if the following conditions are satisfied:

- the "Start dead bus" command is set in the software
- The bus bar is dead (USS < 5% UN)
- The generator voltage and frequency can have any valid value.

If all the conditions have been satisfied, the activation output changes from LOW tot HIGH.

7.2.4 Generator (P_14.1)

The Generator screen appears when you press the main **ELE** screen selection key, followed by **F4**. Optionally, the operating diagram of the synchronous generator and, optionally, its bearing and winding temperatures are displayed.

Details of the function and setting of the generator controller can be found in Technical Instruction 1530-0182.

GE Proprietary Information: CONFIDENTIAL! Use or disclosure of data contained on this sheet is subject to the restrictions on the cover or on the first page.

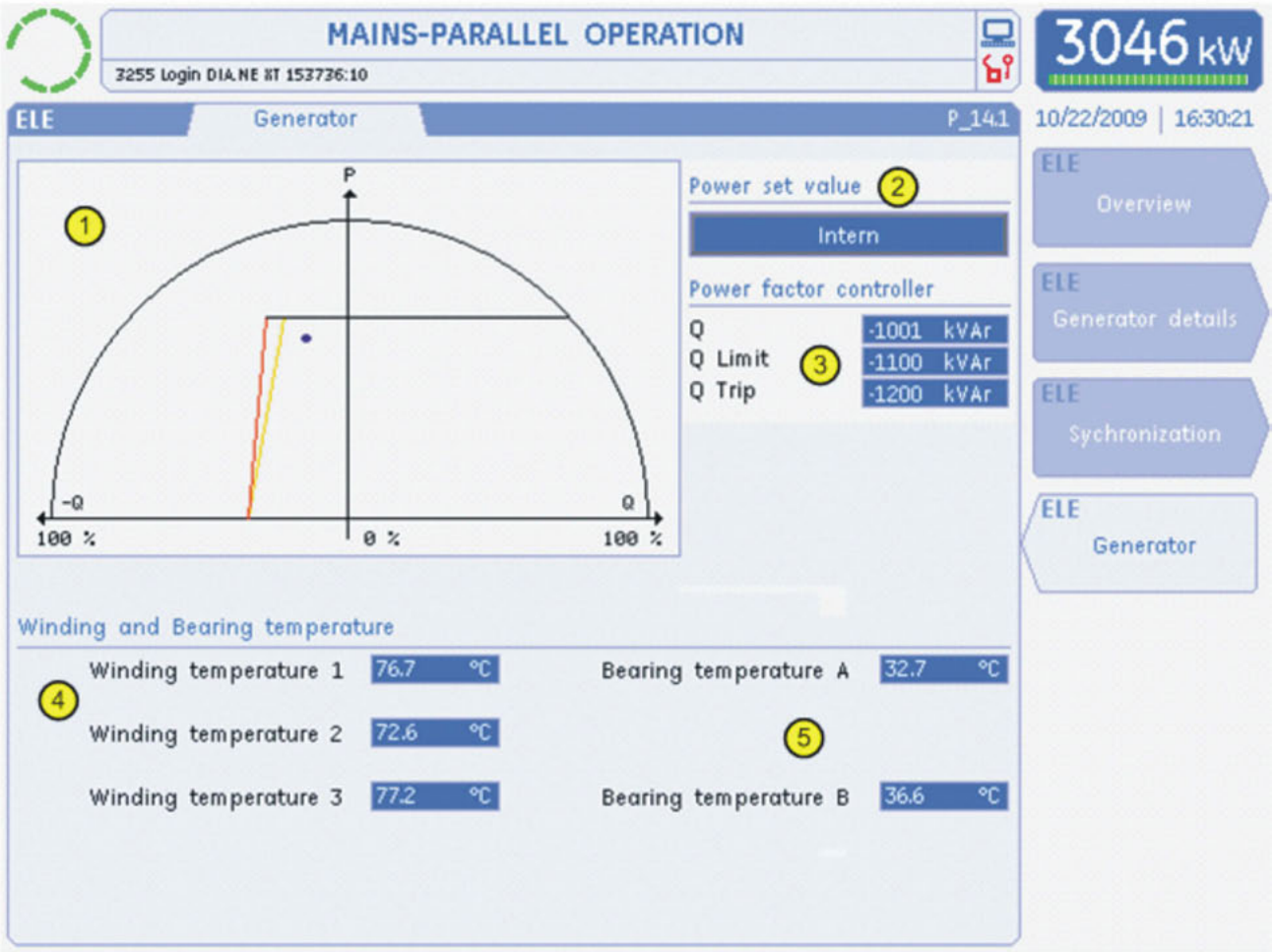

① Operating diagram of synchronous generator

The operating diagram of the synchronous generator shows the effective power and reactive energy. The blue dot indicates the operating point. The current reactive energy (Q), the maximum permissible reactive energy (Q LIMIT - orange line) and the exciter failure value (Q TRIP - red line)

Where the permissible reactive energy is reached and the generator control system is enabled, an operating notification is issued and the control system is limited to this value.

Where the maximum reactive energy (exciter failure value) has been reached, the engine shuts down due to exciter failure.

② Control type indication

The following control types are available for power factor control:

None	only operating diagram displayed
Internal	Setpoint value preset via parameter setting
External - analogue	Power factor setpoint preset via analogue signal
External - bus	Power factor setpoint value preset via bus

GE Proprietary Information: CONFIDENTIAL! Use or disclosure of data contained on this sheet is subject to the restrictions on the cover or on the first page.

③ Reactive energy indication

The following information on reactive energy is displayed:

Q	current reactive energy
Q Limit	Limit level for warning and control limit
Q Trip	Limit level for shutdown due to exciter failure

④ Generator winding temperature

Optionally, generator winding temperatures can be displayed in degrees Celsius, degrees Fahrenheit or in Kelvin.

Depending on the generator type, either one or three measured values can be visualised.

⑤ Generator bearing temperature

Optionally, generator bearing temperatures can be displayed in degrees Celsius, degrees Fahrenheit or in Kelvin.

7.3 Hydraulic diagram (HYD)

The **HYD** screen group contains information on the hydraulic system. Pressure and temperature data for the oil and cooling water circuits are displayed.

7.3.1 Oil/Cooling Water screen (P_21.1)

The Oil/Cooling Water screen appears when you press the **HYD** screen selection key. This screen displays the main hydraulic measured quantities, as well as operating conditions in the cooling circuits.

GE Proprietary Information: CONFIDENTIAL! Use or disclosure of data contained on this sheet is subject to the restrictions on the cover or on the first page.

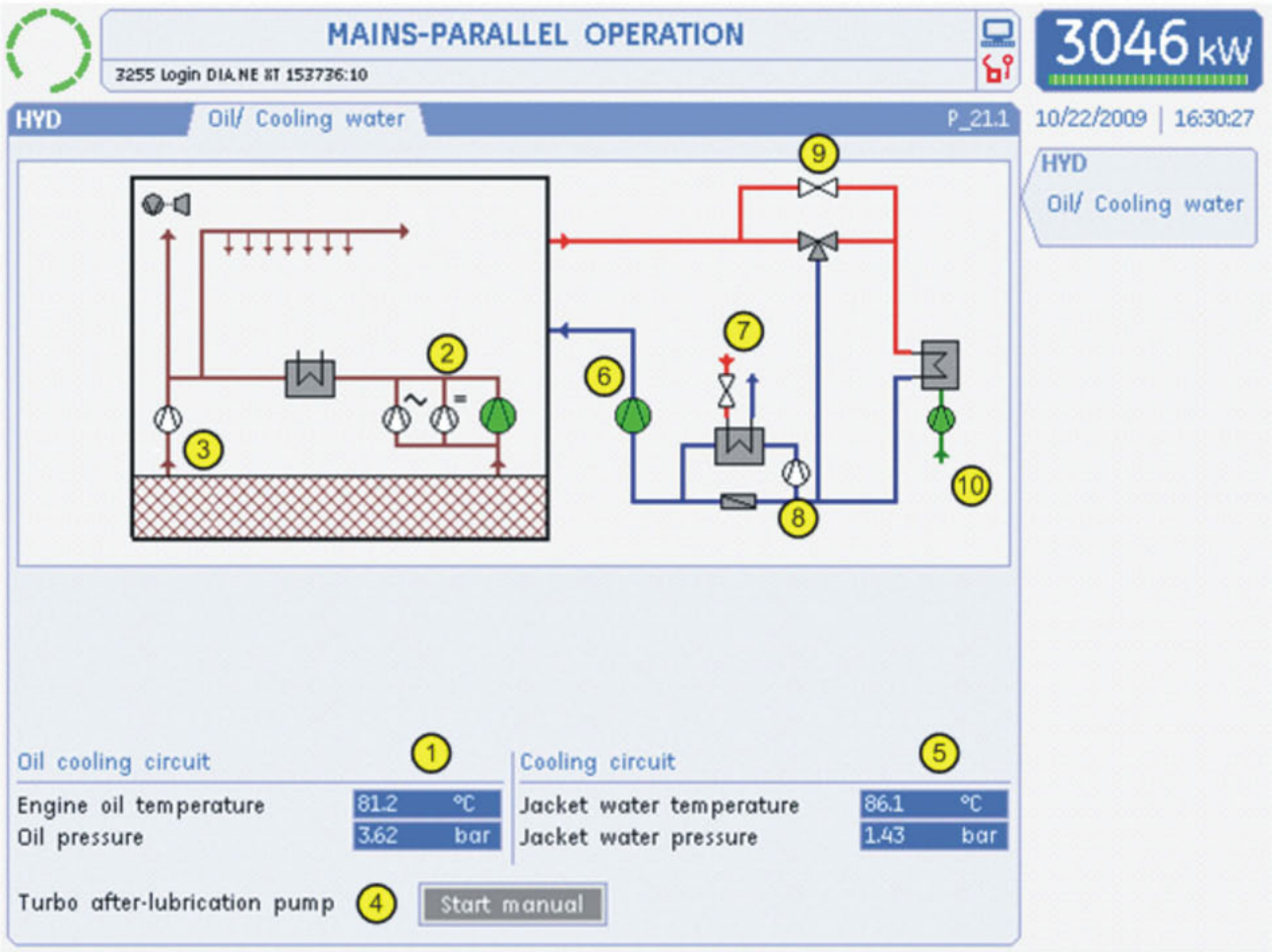

① **measured values for lube oil circuit**

The current oil temperature and oil pressure are displayed.

② **Oil pumps**

A number of oil pumps are available, depending on the engine type:

Main oil pump

Pre-lubricating pump (24V)

Pre-lubricating pump (230V)

The type of pump operated indicated by a change of colour from white to green.

③ **Turbocharger oil pump**

Optionally, the operating condition of the turbocharger oil pump can be displayed here. If the pump is operating, the colour changes to green.

④ **Manual startup of turbocharger lubricating pump**

GE Proprietary Information: CONFIDENTIAL! Use or disclosure of data contained on this sheet is subject to the restrictions on the cover or on the first page.

Where a turbocharger lubricating pump is available as an option, you can activate the pump manually by pressing the Start button.

⑤ measured values for cooling water circuit

The current oil temperature and oil pressure are displayed.

⑥ Cooling water pump

The operating condition of the cooling water pump is displayed. If the pump is enabled, this is indicated by the colour changing to green.

⑦ Preheating system

Optionally, the operating condition of the preheating system is displayed. If the system is enabled, this is indicated by the colour changing to green.

⑧ Preheating pump

Optionally, the operating condition of the preheating pump is displayed. If the pump is enabled, this is indicated by the colour changing to green.

⑨ Preheating from external heating circuit

Optionally, the operating condition of the external preheating system is displayed. If the system is enabled, this is indicated by the colour changing to green.

⑩ (Emergency) cooling system

Optionally, the operating condition of the cooling water pump is displayed. If the cooling system is enabled, this is indicated by the colour changing to green.

7.4 Gas Supply (GAS)

The **GAS** screen group contains information on the gas supply to the engine. measured values and actuating variables for the gas volume and quality are displayed.

Note: Only the Gas Details (P_31.1) screen is displayed in Customer View.

7.4.1 Gas Details (P_31.1)

The Gas Details screen appears when you press the main **GAS** screen selection key. This screen displays the main information on the gas pressure control system(s) and the volume(s) of gas supplied.

Note: Customer View does not show the indications for mixture details ⑨.

GE Proprietary Information: CONFIDENTIAL! Use or disclosure of data contained on this sheet is subject to the restrictions on the cover or on the first page.

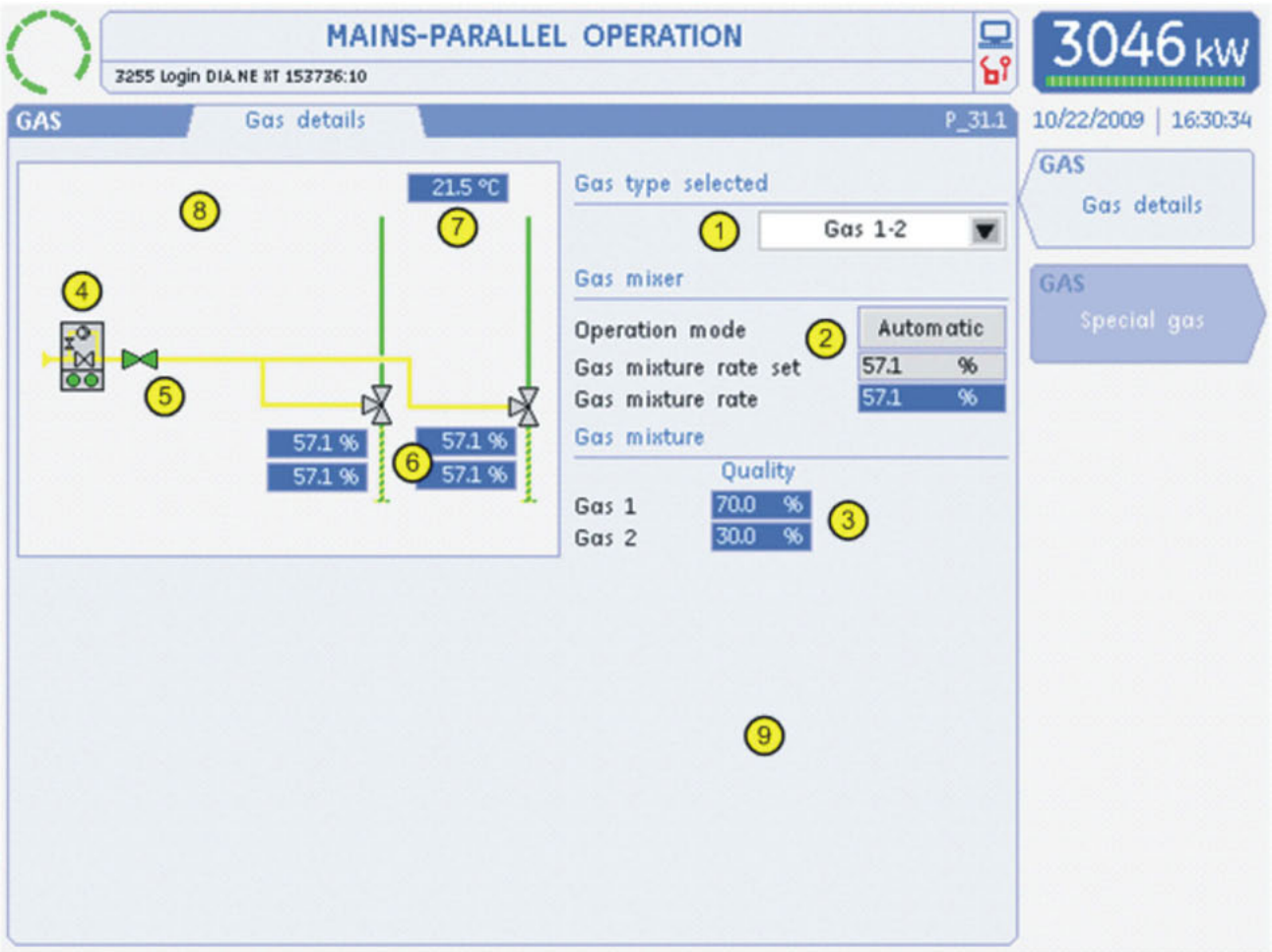

① Gas type selection

You can select the desired gas type from a drop-down menu. Depending on the application, up to 4 gas types can be selected (**Gas 1, Gas 2, Gas 3 and Gas 4**). Optionally, a quality-dependant gas type, (**Gas 1-2**), or a mixed operation using two gas pressure control systems (**Gas 1/3 and Gas 1-2/3**) can also be selected. The **Auto Gas** entry activates the automatic gas type switching system.

② Gas mixer setting

Mode of operation

Using the **Operation mode** screen button (automatic – manual), you can make the entry field for the setpoint value editable. The button is only available if the generator switch is deactivated. If the button has been activated (manual mode of operation) and the generator switch is activated, the automatic mode of operation is reactivated automatically. Moreover, switching is only possible if the user has logged in at a minimum of user level customer (10).

GE Proprietary Information: CONFIDENTIAL! Use or disclosure of data contained on this sheet is subject to the restrictions on the cover or on the first page.

Entering setpoint values

At **Gas mixer rate set** you can enter the setpoint value for the gas mixer position as a percentage. The entry field is only visible while the generator switch is off and the setting has been switched to manual. In addition, the operator must at least have logged in as User Level Customer (10).

Current setpoint value

Gas mixer rate displays the current setpoint value to be used by the control unit.

③ Gas quality indication

If the gas type is subject to strong quality fluctuations (CH4 content, calorific value), it is possible to interpolate between two different parameter sets, depending on the measurement signal provided by the customer. The current interpolation factor (i.e. gas quality) is displayed as a percentage.

④ Gas pressure control system leak test

The gas pressure control system test is represented by the following 4 symbols:

No leak test requested

Leak test in progress

Gas pressure control system OK

Error during gas pressure control system test

⑤ Gas valve

The condition of the gas valve is represented by a colour change. If the valve is shown as green, the engine control system activates the "open" command.

⑥ Gas mixer actual value signal

The actual values for individual gas mixers are displayed as an opening percentage. Up to four gas mixers (1 - 4) can be installed on the engine, depending on the configuration.

⑦ Intake air temperature

The intake air temperature is displayed in degrees Celsius, Fahrenheit or Kelvin.

⑧ Alternative indications with gas proportioning valve

Depending on the engine configuration, gas proportioning valves can be installed instead of traditional gas mixers. The setpoint value for the mixture is set directly by entering a desired lambda value. The ratio indicates the current air volume as opposed to the minimum air volume required for full combustion.

GE Proprietary Information: CONFIDENTIAL! Use or disclosure of data contained on this sheet is subject to the restrictions on the cover or on the first page.

Variant with one gas pressure control system:

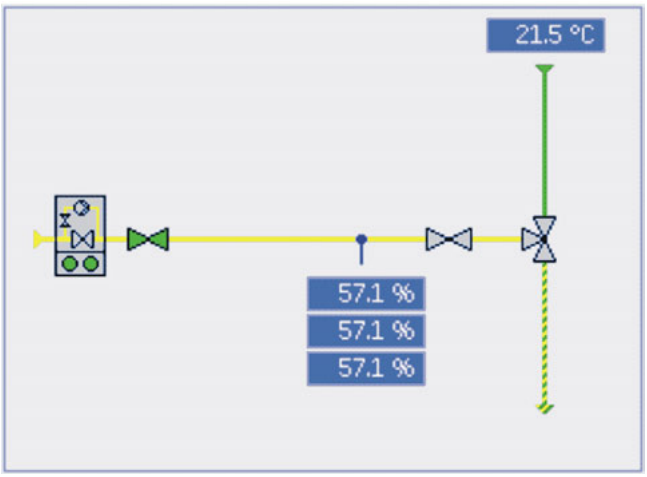

Up to three gas proportioning valves in parallel control the ratio of fuel gas to air in the mixture. The percentage indicated is the opening angle of the proportioning valve.

The gas proportioning valves are numbered consecutively from the top down. This arrangement is reflected in technical diagrams, distribution plans, alarm systems and parameter settings.

Variant with two gas pressure control systems:

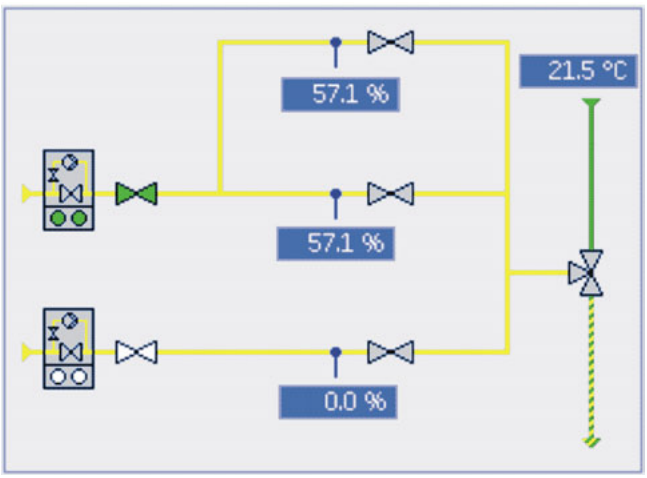

In this configuration, the gas pressure control system with the lower-quality gas in terms of calorific value (e.g. biogas) can be fitted with up to two gas proportioning valves and the system with the higher calorific value (e.g. natural gas) can be fitted with one valve. The percentage indicated is the opening angle of the proportioning valve.

The gas proportioning valves are numbered consecutively and the valve at the very top is number 3, the middle one number 1 and the bottom one number 2. This arrangement is reflected in technical diagrams, distribution plans, alarm systems and parameter settings.

⑨ Details of gas proportioning valves

GE Proprietary Information: CONFIDENTIAL! Use or disclosure of data contained on this sheet is subject to the restrictions on the cover or on the first page.

The gas proportioning valve produces data which are only displayed in Expert Mode. Up to 3 columns can be displayed, depending on the engine configuration.

Gas proportioning valve

0.000	λ	0.000	λ	0.000	λ
0.0	%	0.0	%	0.0	%
0.0	°C	0.0	°C	0.0	°C
0.0	l/s	0.0	l/s	0.0	l/s
0	mbar	0	mbar	0	mbar

The following values are displayed:

[λ]	Lambda factor
[%]	Gas proportioning valve opening angle
[°C], [°F], [K]	Fuel gas temperature
[l/s], [ft3/s]	Calculated flow rate
[bar], [psi], [kPa]	Fuel gas pressure

7.4.2 Special Gas (P_32.1)

The Special Gas screen appears when you press the main **GAS** screen selection key, followed by **F2**. Additionally, measured values for special gases are displayed on this screen.

Note: This screen is only displayed in Customer View and when at least one special gas measured value is to be displayed.

GE Proprietary Information: CONFIDENTIAL! Use or disclosure of data contained on this sheet is subject to the restrictions on the cover or on the first page.

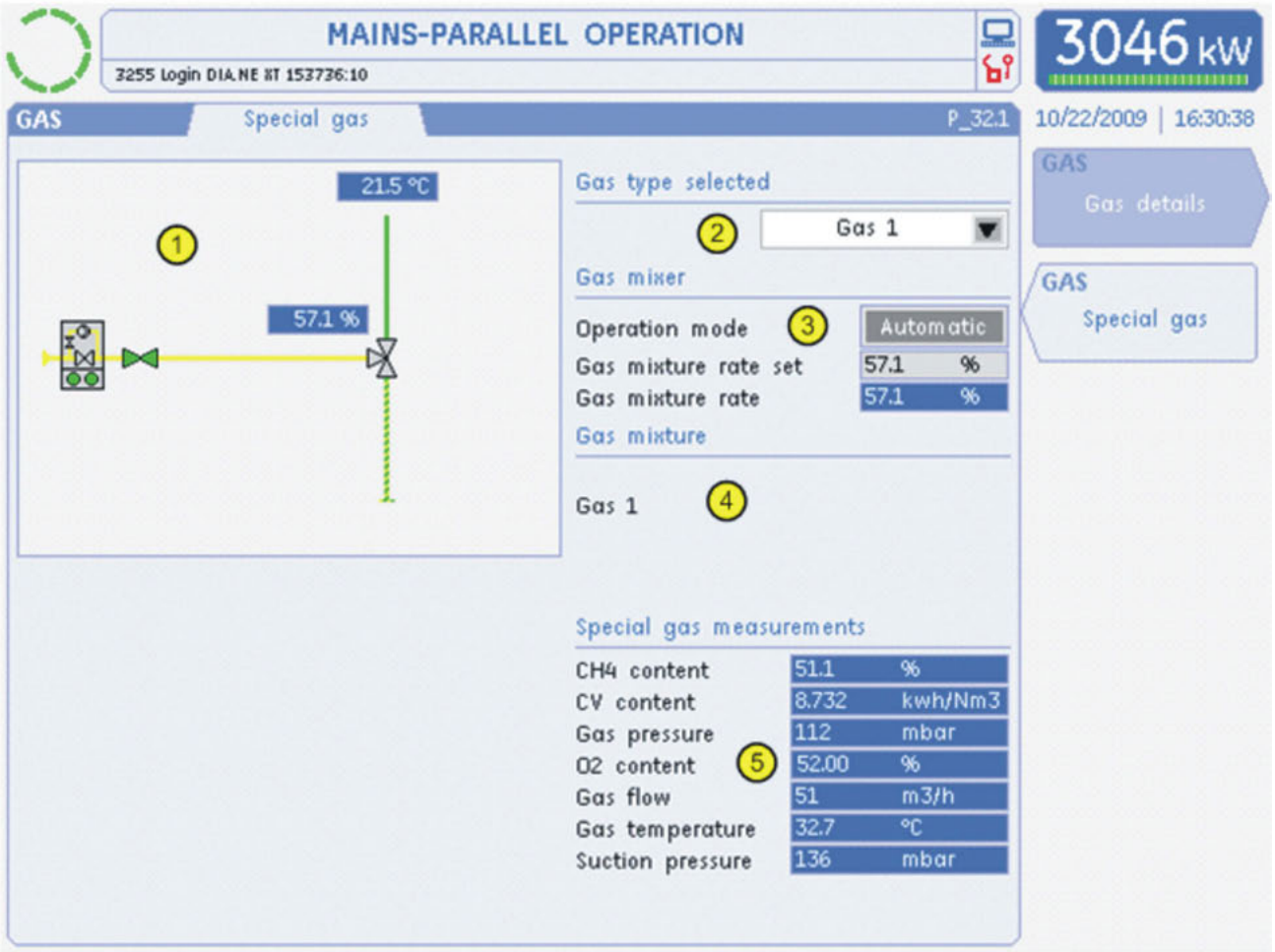

① **Animated switching condition diagram**

An explanation of the individual symbols can be seen in the Gas Details (P_31.1) screen.

② **Gas type selection**

You can select the desired gas type from a drop-down menu. Depending on the application, 4 gas types can be selected (**Gas 1, Gas 2, Gas 3 and Gas 4**). Optionally, a quality-dependant gas type, (**Gas 1-2**), or a mixed operation using two gas pressure control systems (**Gas 1/3 and Gas 1-2/3**) can also be selected. The **Auto Gas** entry activates the automatic gas type switching system.

③ **Gas mixer setting**

Mode of operation

Using the **Operation mode** screen button (automatic – manual), you can make the entry field for the setpoint value editable. The button is only available if the generator switch is deactivated. If the button has been activated (manual mode of operation) and the generator switch is activated, the automatic mode of operation is reactivated automatically. Moreover, switching is only possible if the user has logged in at User Level Customer

(10) or higher.

GE Proprietary Information: CONFIDENTIAL! Use or disclosure of data contained on this sheet is subject to the restrictions on the cover or on the first page.

Entering setpoint values

At **Gas mixer rate set** you can enter the setpoint value for the gas mixer position as a percentage. The entry field is only visible while the generator switch is off and the setting has been switched to manual. In addition, the operator must at least have logged in as User Level Customer (10).

Current setpoint value

Gas mixer rate displays the current setpoint value to be used by the control unit.

④ Gas quality indication

If the gas type is subject to strong quality fluctuations (CH4 content, calorific value), it is possible to interpolate between two different parameter sets, depending on the measurement signal provided by the customer. The current interpolation factor (i.e. gas quality) is displayed as a percentage.

⑤ Indication of special gas data

Optionally, the various measured values for special gases are displayed here.

7.4.3 Gas Mixture (P_33.1)

The Gas Mixture screen appears when you press the main **GAS** screen selection key, followed by **F3**. Additionally, setpoint values for the gas mixture are displayed on this screen.

Note: This screen is only displayed in Customer View and when at least one gas mixture is provided for this engine.

GE Proprietary Information: CONFIDENTIAL! Use or disclosure of data contained on this sheet is subject to the restrictions on the cover or on the first page.

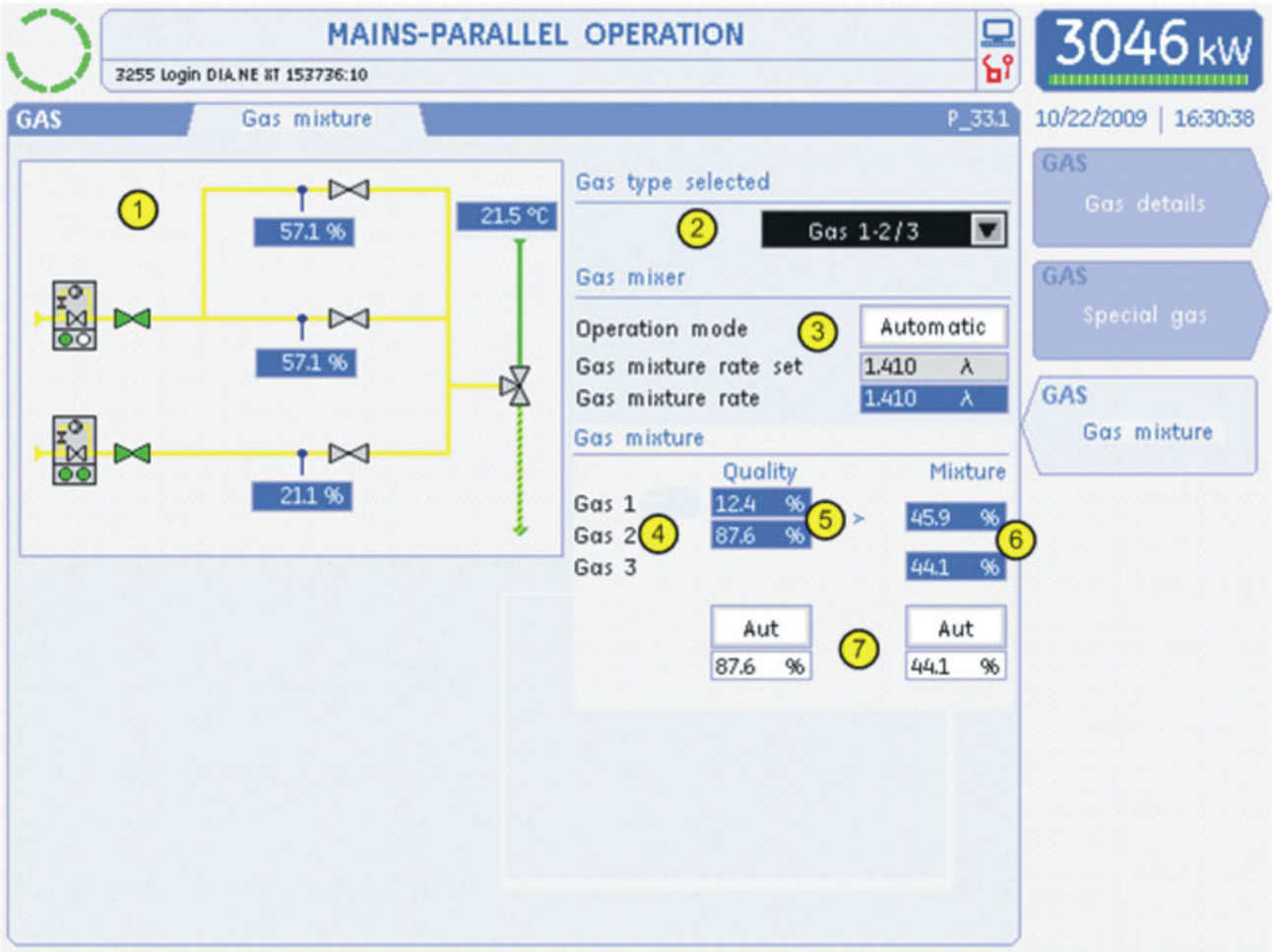

① **Animated switching condition diagram**

An explanation of the individual symbols can be seen in the Gas Details (P_31.1) screen.

② **Gas type selection**

You can select the desired gas type from a drop-down menu. Depending on the application, up to 4 gas types can be selected (**Gas 1, Gas 2, Gas 3 and Gas 4**). Optionally, a quality-dependant gas type, (**Gas 1-2**), or a mixed operation using two gas pressure control systems (**Gas 1/3 and Gas 1-2/3**) can also be selected. The **Auto Gas** entry activates the automatic gas type switching system.

③ **Gas mixer setting**

Mode of operation

Using the **Operation mode** screen button (automatic – manual), you can make the entry field for the setpoint value editable. The button is only available if the generator switch is deactivated. If the button has been activated (manual mode of operation) and the generator switch is activated, the automatic mode of operation is reactivated automatically. Moreover, switching is only possible if the user has logged in at User Level Customer

(10) or higher.

GE Proprietary Information: CONFIDENTIAL! Use or disclosure of data contained on this sheet is subject to the restrictions on the cover or on the first page.

Entering setpoint values

At **Gas mixture rate set** you can enter the setpoint value for the gas mixer position as a percentage. The entry field is only visible while the generator switch is off and the setting has been switched to manual. In addition, the operator must at least have logged in as User Level Customer (10).

Current setpoint value

Gas mixture rate displays the current setpoint value to be used by the control unit.

④ Current gas type indication

The currently available gas types are shown here. A mixture of these gas types (e.g. the related parameter sets) produces the current, interpolated gas type.

⑤ Current gas quality indication

The ratio of gas quality interpolation between the Gas 1 parameters and Gas 2 parameters are displayed here.

⑥ Current mixture ratio indication

The mixture ratio for the gas change-over between gas type 1-2 and gas type 3 is shown here.

⑦ Automatic / manual setting change-over

Here you can set the gas quality or mixture ratio manually.

7.5 Engine controller (ENG)

The **ENG** screen group contains information on the active engine controller. The setpoint and actual values of individual controllers are displayed. Trend analyses assist in diagnosing control changes on the engine.

Note: Only the Engine Controller Overview (P_41.1) screen and the Ignition (P_46.1) screen are displayed in Customer View.

7.5.1 Engine Controller Overview (P_41.1)

The Engine Controller Overview screen appears when you press the main **ENG** screen selection key. This screen displays an overview of the status, operating mode and controlled variables of all the engine controllers (LEANOX, power, speed and isolated operation controller).

GE Proprietary Information: CONFIDENTIAL! Use or disclosure of data contained on this sheet is subject to the restrictions on the cover or on the first page.

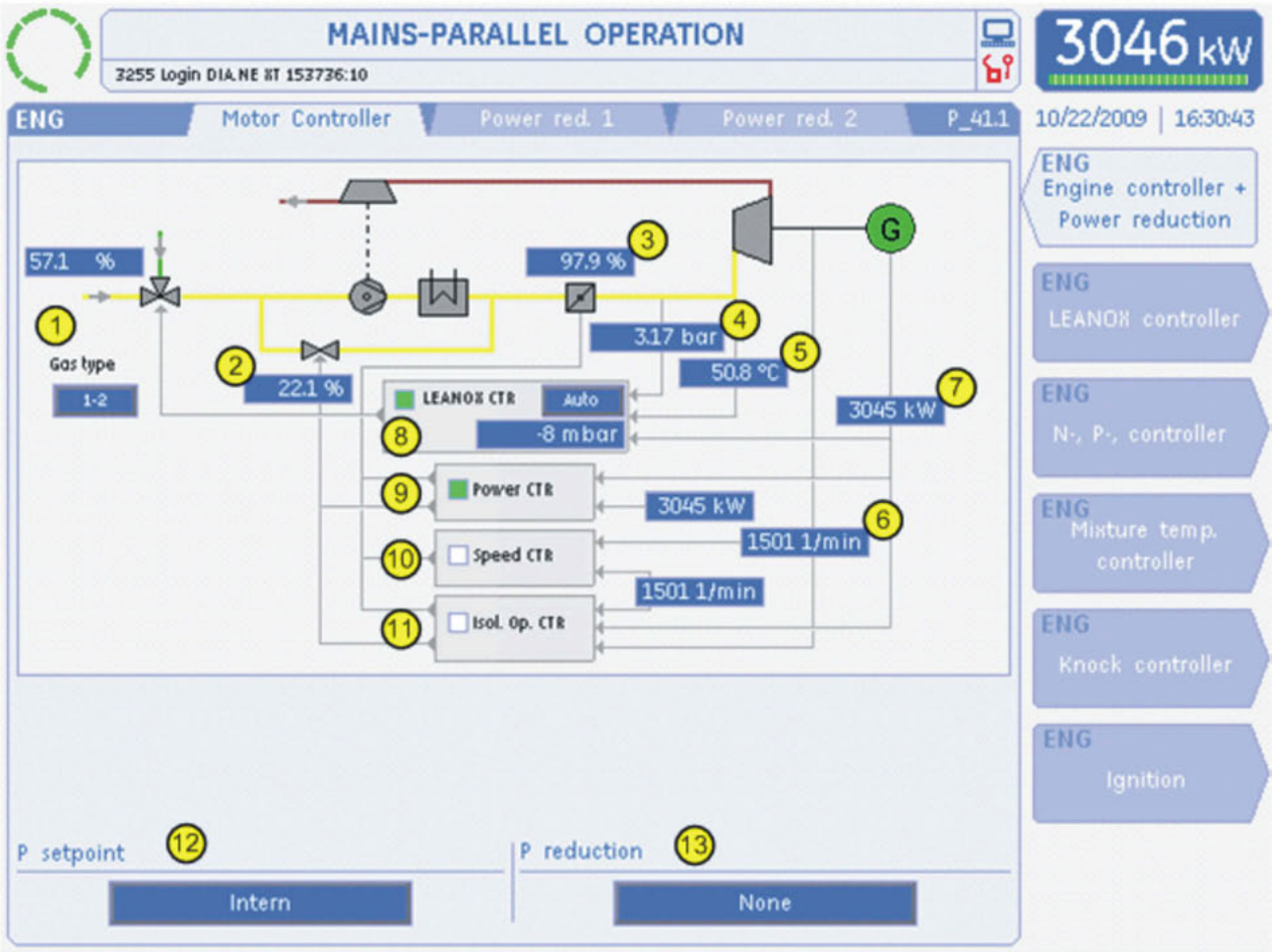

① Gas mixer / Gas proportioning valve

This is where details of the gas mixer and/or the gas proportioning valve are displayed, depending on the engine type and plant design.

Gas mixer:

The opening rate of the gas mixer is displayed as a percentage (see above screen).

Gas proportioning valve:

The lambda value of the gas proportioning valve is displayed.

GE Proprietary Information: CONFIDENTIAL! Use or disclosure of data contained on this sheet is subject to the restrictions on the cover or on the first page.

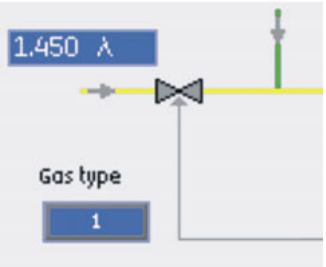

Display showing the gas type

In addition, the current **Gas type** for each mixer variant is displayed. The following displays are possible, depending on the plant design:

Gas type	Description
1	Gas type 1
2	Gas type 2
3	Gas type 3
4	Gas type 4
1_2	Gas quality = interpolation between the gas 1 and 2 parameter sets
1_2/3	Gas type 1_2 (gas pressure control system 1) mixed with gas type 3 (gas pressure control system 2)
1/3	Gas type 1 (gas pressure control system 1) mixed with gas type 3 (gas pressure control system 2)

Other details of the gas mixture are displayed in the **Gas** screen group.

② Turbocharger bypass valve

Display showing the position of the turbocharger bypass valve (optional).

③ Throttle valve

Display showing the default throttle valve position.

④ Boost pressure

Display showing the boost pressure.

⑤ Mixture temperature

Display showing the mixture temperature.

⑥ Speed

Display showing the engine speed.

⑦ Power output

Display showing the electrical power produced by the generator.

⑧ LEANOX controller

If the controller is active, the indicator light changes from white ☐ to green ■.

The controller operating mode (auto/manual) and the controller deviation are displayed in mbar and mpsi.

⑨ Power controller

GE Proprietary Information: CONFIDENTIAL! Use or disclosure of data contained on this sheet is subject to the restrictions on the cover or on the first page.

If the controller is active, the indicator light changes from white ☐ to green ■.

⑩ **Speed controller**

If the controller is active, the indicator light changes from white ☐ to green ■.

⑪**Isolated operation controller**

If the controller is active, the indicator light changes from white ☐ to green ■.

⑫ **Power set value and power reduction**

The following types of power (P) set values are available:

Power set value	Description
Internal	The power set value is determined on the basis of the power setpoint set by the operator. The power setpoint can be set in the Overview, Engine Controller Overview, LEANOX Controller and Power Controller screens.
External – analogue	The power set value is generated by an external analogue signal (4-20mA). See "Power / Scaling external power setpoint" parameter.
External – bus	The power set value is created by a higher-order control system connected to DIA.NE XT via an industrial bus connection.

⑬ **The following types of power (P) reduction are possible:**

Power reduction	Description
None	No power reduction is in effect.
Knock	The knocking intensity has exceeded the limit value for power reduction.
Misfiring	The number of misfires has exceeded the limit value for power reduction.
External – analogue	Power reduction due to an external analogue signal. This signal can be used for a variety of applications (e.g. to control return water temperature). See "Power / Scaling external power limitation" parameter.
External – bus	The power reduction is caused by a higher-order control system connected to DIA.NE XT via an industrial bus connection.
Mixture temperature	The mixture temperature has exceeded the limit value for power reduction. The power setpoint is reduced linearly. See "Power / Mixture temperature reduction" parameter.
Maximum power	The pre-set power setpoint has exceeded the rated power related to the gas type and is limited to the latter. See "Power / Rated values" parameter.
Minimum power	The pre-set power setpoint has fallen below the minimum permissible power setpoint and is limited to the latter. See "Power / Rated values / Minimum power" parameter.
Exhaust gas temperature	If the cylinder temperature ("Exhaust temp. positive/negative deviation max.") deviates from the average value for more than 30 seconds, a power reduction is activated.
LEANOX	The LEANOX controller deviation limit value has been exceeded towards "lean". The power setpoint is reduced linearly. If the LEANOX controller deviation limit value is exceeded by than 20 percent towards "rich", the engine is switched off. See "LEANOX / Gas type x / Controller / Controller deviation limit" parameter

GE Proprietary Information: CONFIDENTIAL! Use or disclosure of data contained on this sheet is subject to the restrictions on the cover or on the first page.

Power reduction	Description
Intake temperature	The intake temperature has exceeded the limit value for power reduction. The power setpoint is reduced linearly. See "Power / Intake air reduction" parameter.
CH4	If the CH4 content of the gas is decreasing, the power is reduced in accordance with an external signal (4-20mA). See "Special gas / CH4 content" parameter.
Gas pressure	If the gas pressure is decreasing, the power is reduced in accordance with an external signal (4-20mA). See "Special gas / Gas pressure" parameter.
Suction pressure	If the suction pressure (compressor intake pressure, e.g. on a landfill site) is decreasing, the power is reduced in accordance with an external signal (4-20mA). See "Special gas / Suction pressure" parameter.
Turbocharger speed	If one of the two "switching point maximum speed" limits (exhaust gas/turbocharger A or B) is exceeded, the power is reduced accordingly depending on the parameter "Value for P reduction" (power/turbocharger speed reduction).
Undervoltage	If the generator voltage falls below an adjustable limit level of the nominal generator voltage, power reduction begins.
Overvoltage	If the generator voltage exceeds an adjustable limit level of the nominal generator voltage, power reduction begins.
Underfrequency	If the generator frequency falls below an adjustable limit level of the nominal generator frequency, power reduction begins.
Overfrequency	If the generator frequency exceeds an adjustable limit level of the nominal generator frequency, power reduction begins. Power reduction only ends when the difference from the nominal frequency is again very small (hysteresis window).
Gen. winding temp.	If the generator winding temperature exceeds an adjustable limit level, power reduction begins.
Cooling-water temperature	If the jacket water temperature rises, power is reduced. See "Power / Jacket water temperature reduction" parameter.
Oil temperature	If the oil temperature rises, power is reduced. See "Power / Oil temperature reduction" parameter.
Return temperature	If the hot water return temperature rises, power is reduced. See "Power / Return water temperature reduction" parameter.
Pre-combustion chamber gas pressure	If the pressure in the pre-combustion chamber gas train decreases, power is reduced. See "Power / Pressure pre-chamber gas train reduction" parameter.

The most effective power reduction is displayed. Further details are displayed in the "Engine Controller Reductions" screen.

Additionally, a reactive energy reduction can take place. This is not displayed in this screen, however, but only as an operational notification in the alarm management:

Reactive energy reduction	Description
Gen. winding temp.	If the generator winding temperature exceeds an adjustable limit level, reactive energy reduction begins.
Pole wheel angle	If the capacitive reactive energy exceeds a certain value calculated on the basis of the pole wheel angle, the reactive energy is limited.

GE Proprietary Information: CONFIDENTIAL! Use or disclosure of data contained on this sheet is subject to the restrictions on the cover or on the first page.

7.5.2 Power Reduction 1 (P_41.2)

The Power Reduction 1 screen appears when you press the main **ENG** screen selection key and then the **TAB** key. It shows the first part of an overview of the status of the power reductions envisaged for this engine.

Note: This screen is not displayed in Customer View.

① Maximum power reduction

The protective measure for the engine showing the maximum reduction is displayed here.

② Reduction causes

The names of the reduction causes relevant to the plant configuration are displayed here using a dynamic list.

An explanation of the individual reductions can be seen in the Engine Controller Overview (P_31.1) screen.

③ Power reduction by cause

The admissible load limit by cause is listed here in kW.

④ Bar chart showing power reductions by cause

This overview is meant to speed up the identification of power reduction.

GE Proprietary Information: CONFIDENTIAL! Use or disclosure of data contained on this sheet is subject to the restrictions on the cover or on the first page.

⑤ **Highest reduction**

The longest bar limits the maximum power.

⑥ **Reduction**

All shorter bars do not affect the maximum power.

7.5.3 Power Reduction 2 (P_41.3)

The Power Reduction 2 screen appears when you press the main **ENG** screen selection key and then the **TAB** key twice. Further status indications are displayed as a continuation of the overview from the Power Reduction 1 screen.

Note: This screen is not displayed in Customer View.

① **Maximum power reduction**

The protective measure for the engine showing the maximum reduction is displayed here.

② **Reduction causes**

The names of the reduction causes relevant to the plant configuration are displayed here using a dynamic list.

An explanation of the individual reductions can be seen in the Engine Controller Overview (P_41.1) screen.

GE Proprietary Information: CONFIDENTIAL! Use or disclosure of data contained on this sheet is subject to the restrictions on the cover or on the first page.

③ **Power reduction by cause**

The admissible load limit by cause is listed here in kW.

④ **Bar chart showing power reductions by cause**

This overview is meant to speed up the identification of power reduction.

7.5.4 LEANOX® Controller (P_42.1)

The LEANOX® Controller screen appears when you press the main **ENG** screen selection key, followed by **F2**. The main controller variables and a trend analysis for emission control are summarised on this screen

Note: This screen is only displayed in Customer View.

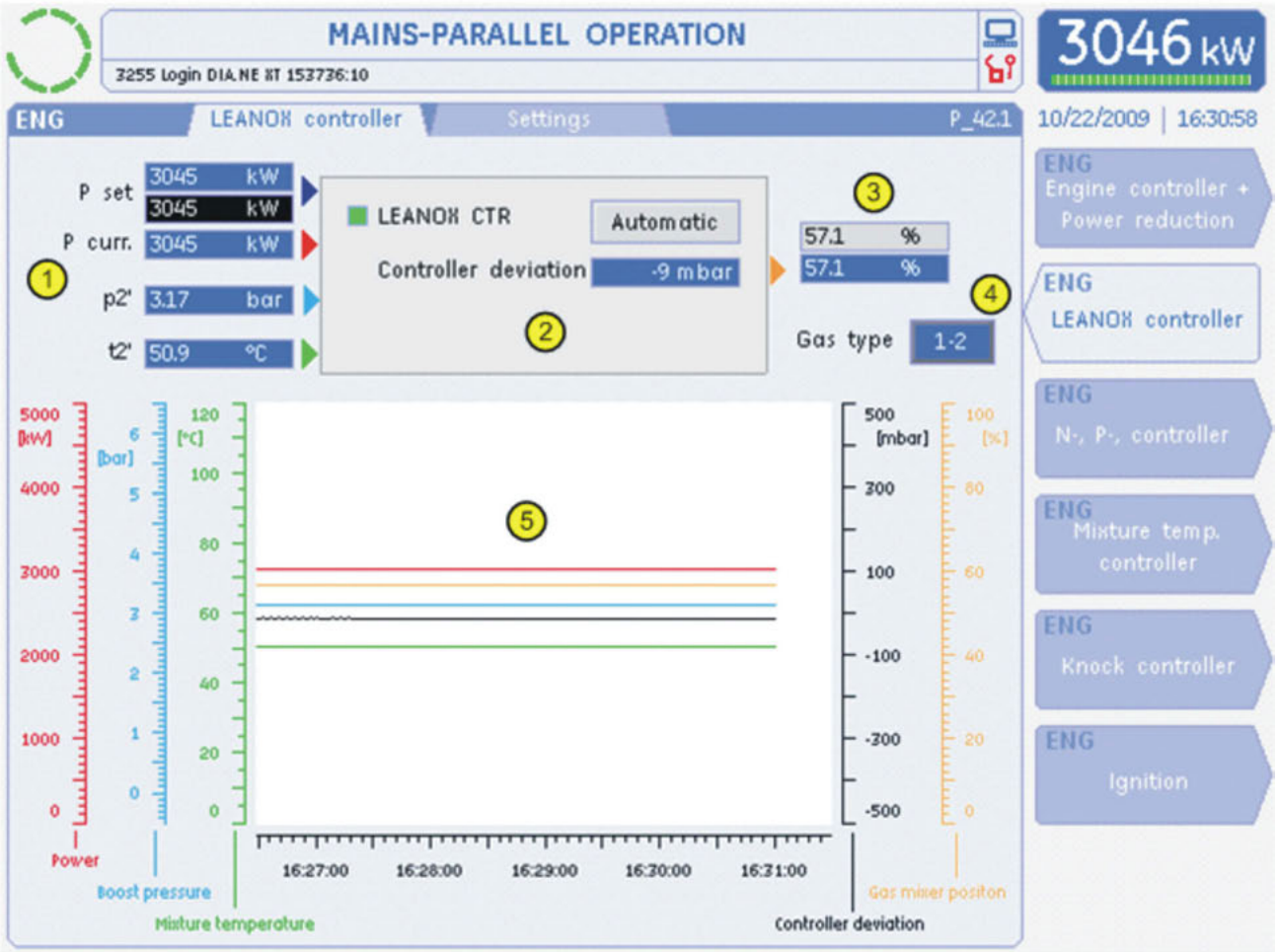

① **Controller input variables**

The following input variables are displayed:

GE Proprietary Information: CONFIDENTIAL! Use or disclosure of data contained on this sheet is subject to the restrictions on the cover or on the first page.

Abbreviation	Description	Unit
P set	Setpoint value	[kW]
P curr.	Current power	[kW]
p2'	Boost pressure	[bar], [psi], [kPa]
t2'	Mixture temperature	[°C], [°F], [K]

② LEANOX® controller

If the controller is active, the indicator light changes from white to green.

Click the **Automatic** button to toggle the operating mode of the LEANOX controller between "Automatic" and "Manual". To do so when the engine is at standstill, you will need to have at least "Customer (10)" authorisation. The button is always enabled for higher user authorisation levels.

The **Controller deviation** box shows the deviation in terms of boost pressure.

③ Controller output

The controller output is connected to the actuator for gas mixing. Depending on the engine configuration, a percentage can be displayed for the gas mixer or the air excess ratio (lambda) for the gas proportioning valve.

The availability of the option to alter the setpoint depends on the operating mode of the LEANOX controller. Adjustments can be made in manual mode.

④ Display showing the gas type

The gas type currently in use is displayed. The individual gas types are listed in the Engine Controller Overview (P_41.1) screen.

⑤ Online trends

The following controlled variables are displayed as a trend:

Abbreviation	Description	Line colour	Unit
Power	Engine load value	red	[kW]
Boost pressure	Current boost pressure	blue	[bar], [psi], [kPa]
Mixture temperature	Mixture temperature	green	[°C], [°F], [K]
Controller deviation	Controller deviation	black	[mbar], [mpsi], [Pa]
Gas mixer position	Gas mixer setpoint value	Orange	[% opened], [λ lambda]

7.5.5 LEANOX® Controller Settings (P_42.2)

The LEANOX® Controller Settings screen appears when you press the main **ENG** screen selection key, then **F2** and finally the **TAB** key. This screen contains the main settings and measured quantities for setting the LEANOX® controller, including trending. Only customers who have received training are permitted to set the controller. Please obtain information on GE Jenbacher's extensive range of training courses.

Note: This screen is only displayed in Customer View.

GE Proprietary Information: CONFIDENTIAL! Use or disclosure of data contained on this sheet is subject to the restrictions on the cover or on the first page.

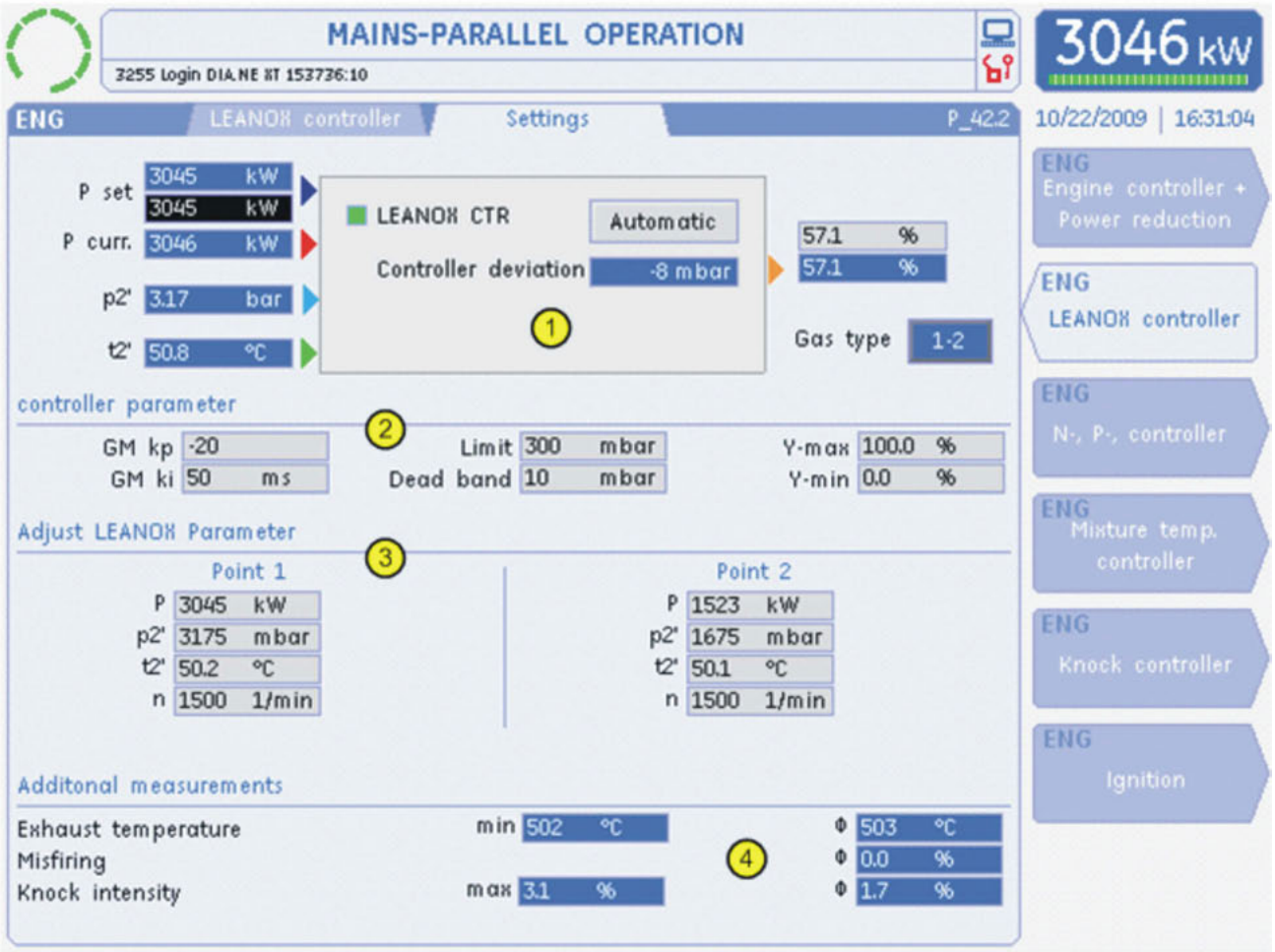

① Controller display

The explanation of the individual symbols is identical to the LEANOX® Controller (P_42.1) screen. Only the bottom two-thirds of the screen are different.

② Controller parameters

The controller parameters can be edited if you are at password level "Advanced Customer" or above. The following settings are displayed:

Abbreviation	Description	Unit
GM kp	Proportional component of controller	[1]
GM ki	Integral component of controller	[ms]
Limit	Max. boost pressure deviation	[mbar], [mpsi], [Pa]
Dead band	Controller dead band	[mbar], [mpsi], [Pa]

GE Proprietary Information: CONFIDENTIAL! Use or disclosure of data contained on this sheet is subject to the restrictions on the cover or on the first page.

Abbreviation	Description	Unit
Y-max	Max. gas mixer setpoint value	[% opened], [λ lambda]
Y-min	Min. gas mixer setpoint value	[% opened], [λ lambda]

③ LEANOX® parameter setting

Only customers who have received training can edit the controller parameters. The following settings are displayed:

Abbreviation	Description	Unit
P	Electrical power	[kW]
p2'	Boost pressure	[mbar], [mpsi], [Pa]
t2'	Mixture temperature	[°C], [°F], [K]
n	Speed	[1/min]

Two points are displayed which can be saved by advanced customers.

④ Additional measured values

A few relevant measured values are listed here to assist with setting the controller.

Description	Unit
Exhaust gas temperature **max** and average **Φ**	[°C], [°F], [K]
Misfire detection	[%]
Knock integrator **max** and average **Φ**	[%]

7.5.6 Speed, Power and Isolated Operation Controller (P_43.1)

The n, P, Isolated Operation Controller screen appears when you press the main **ENG** screen selection key, followed by **F3**. The main controller variables and a trend analysis of speed and power control are summarised on this screen.
Only customers who have received training are permitted to set the controllers. Please obtain information on GE Jenbacher's extensive range of training courses.

Note: This screen is only displayed in Customer View.

GE Proprietary Information: CONFIDENTIAL! Use or disclosure of data contained on this sheet is subject to the restrictions on the cover or on the first page.

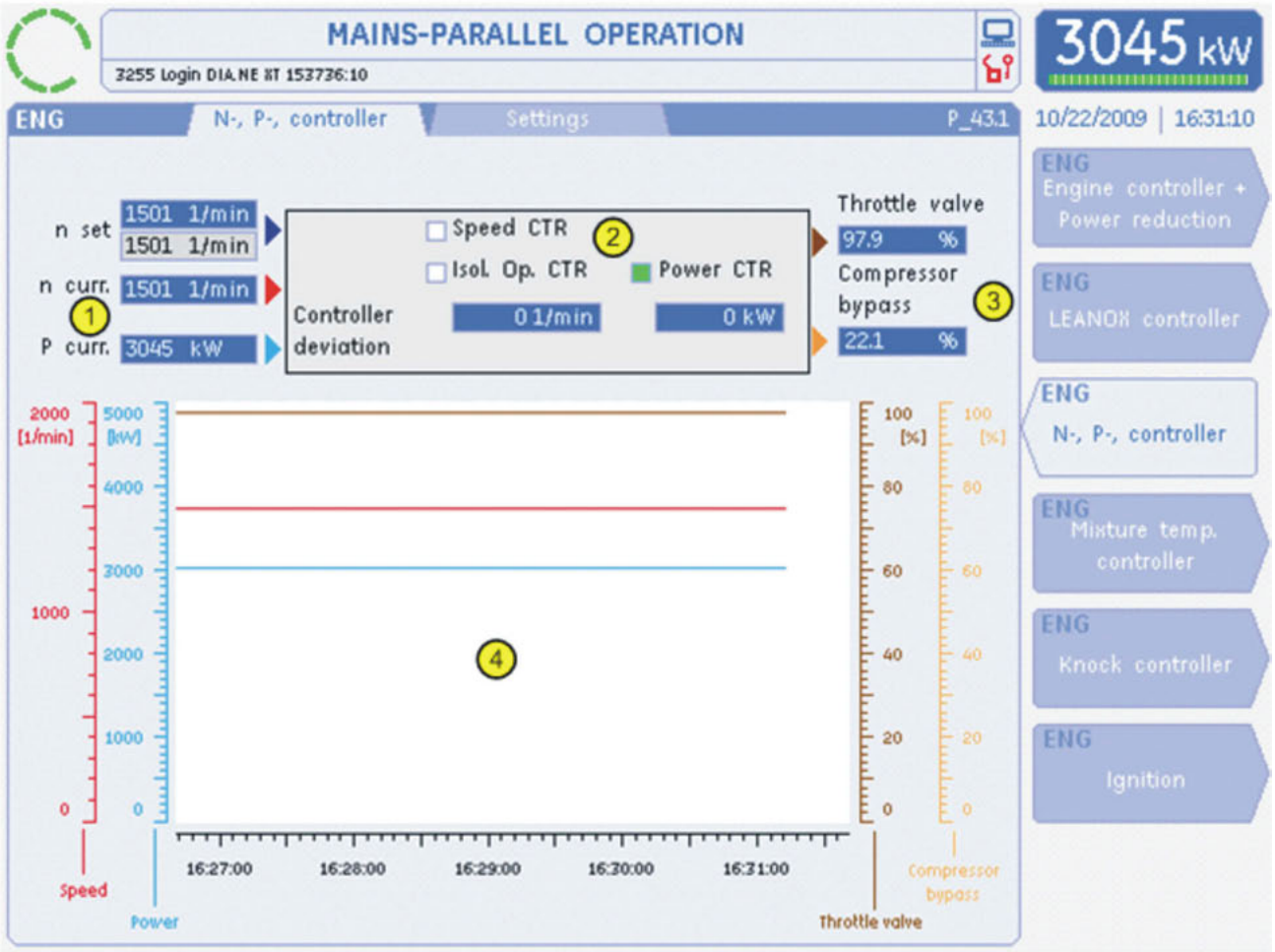

① **Controller input variables**

The following input variables are displayed:

Abbreviation	Description	Unit
n set	Setpoint engine speed	[1/min]
n curr.	Current engine speed	[1/min]
P curr.	Current power	[kW]

② **Speed, Power and Isolated Operation Controllers**

You can see which of the three controllers is active when the corresponding indicator light changes from white ☐ to green ■.

The controller deviation for the speed [1/min] and the power [kW] is displayed at **Controller deviation**.

③ **Controller output**

GE Proprietary Information: CONFIDENTIAL! Use or disclosure of data contained on this sheet is subject to the restrictions on the cover or on the first page.

The controller output is connected to the actuator for the throttle valve and optionally for the turbocharger bypass valve.

④ **Online trends**

The following controlled variables are displayed as a trend:

Abbreviation	Description	Line colour	Unit
Speed	Speed	red	[1/min]
Power	Engine load value	blue	[kW]
Throttle valve	Throttle valve	brown	[% opened]
Compressor bypass	Compressor bypass valve	Orange	[% opened]

7.5.7 Speed, Power and Isolated Operation Controller Settings (P_43.2)

The n, P, Isolated Operation Controller Settings screen appears when you press the main **ENG** screen selection key, then **F3** and finally the **TAB** key. The main controller variables and a trend analysis of speed and power control are summarised on this screen. Only customers who have received training are permitted to set the controllers. Please obtain information on GE Jenbacher's extensive range of training courses.

Note: This screen is only displayed in Customer View.

GE Proprietary Information: CONFIDENTIAL! Use or disclosure of data contained on this sheet is subject to the restrictions on the cover or on the first page.

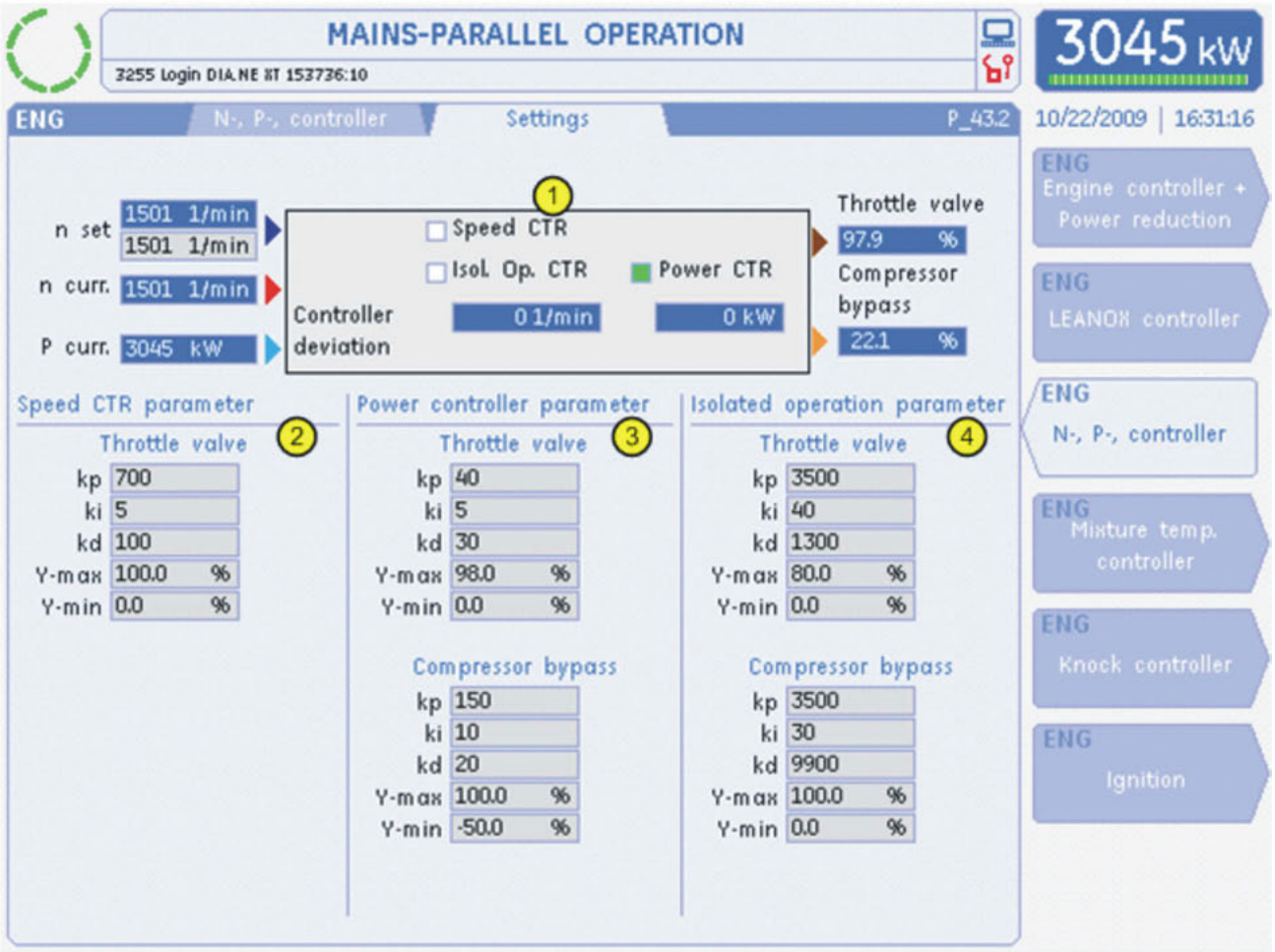

① Controller display

The explanation of the individual symbols is identical to the Speed, Power and Isolated Operation Controller (P_43.1) screen. Only the bottom two-thirds of the screen are different.

② Speed controller parameters

Only customers who have received training can edit the speed controller parameters. The following settings are displayed:

Abbreviation	Description	Unit
kp	Proportional component of controller	[1]
ki	Integral component of controller	[1]
kd	Differential component of controller	[1]

GE Proprietary Information: CONFIDENTIAL! Use or disclosure of data contained on this sheet is subject to the restrictions on the cover or on the first page.

Abbreviation	Description	Unit
Y-max	Maximum actuating variable	[% opened]
Y-min	Minimum actuating variable	[% opened]

③ Power controller parameters

Only customers who have received training can edit the power controller parameters. The following settings are displayed for the throttle valve and, optionally, also for the compressor bypass valve.

Abbreviation	Description	Unit
kp	Proportional component of controller	[1]
ki	Integral component of controller	[1]
kd	Differential component of controller	[1]
Y-max	Maximum actuating variable	[% opened]
Y-min	Minimum actuating variable	[% opened]

④ Isolated operation controller parameters

Only customers who have received training can edit the isolated operation controller parameters. The following settings are displayed for the throttle valve and, optionally, also for the compressor bypass valve.

Abbreviation	Description	Unit
kp	Proportional component of controller	[1]
ki	Integral component of controller	[1]
kd	Differnetial component of controller	[1]
Y-max	Maximum actuating variable	[% opened]
Y-min	Minimum actuating variable	[% opened]

7.5.8 Mixture Temperature Controller (P_44.1)

The Mixture Temperature Controller screen appears when you press the main **ENG** screen selection key, followed by **F4**. The main controller variables and a trend analysis for the mixture temperature controller are summarised on this screen

Only customers who have received training are permitted to set the controllers. Please obtain information on GE Jenbacher's extensive range of training courses.

GE Proprietary Information: CONFIDENTIAL! Use or disclosure of data contained on this sheet is subject to the restrictions on the cover or on the first page.

Note: This screen is only displayed optionally and in Customer View.

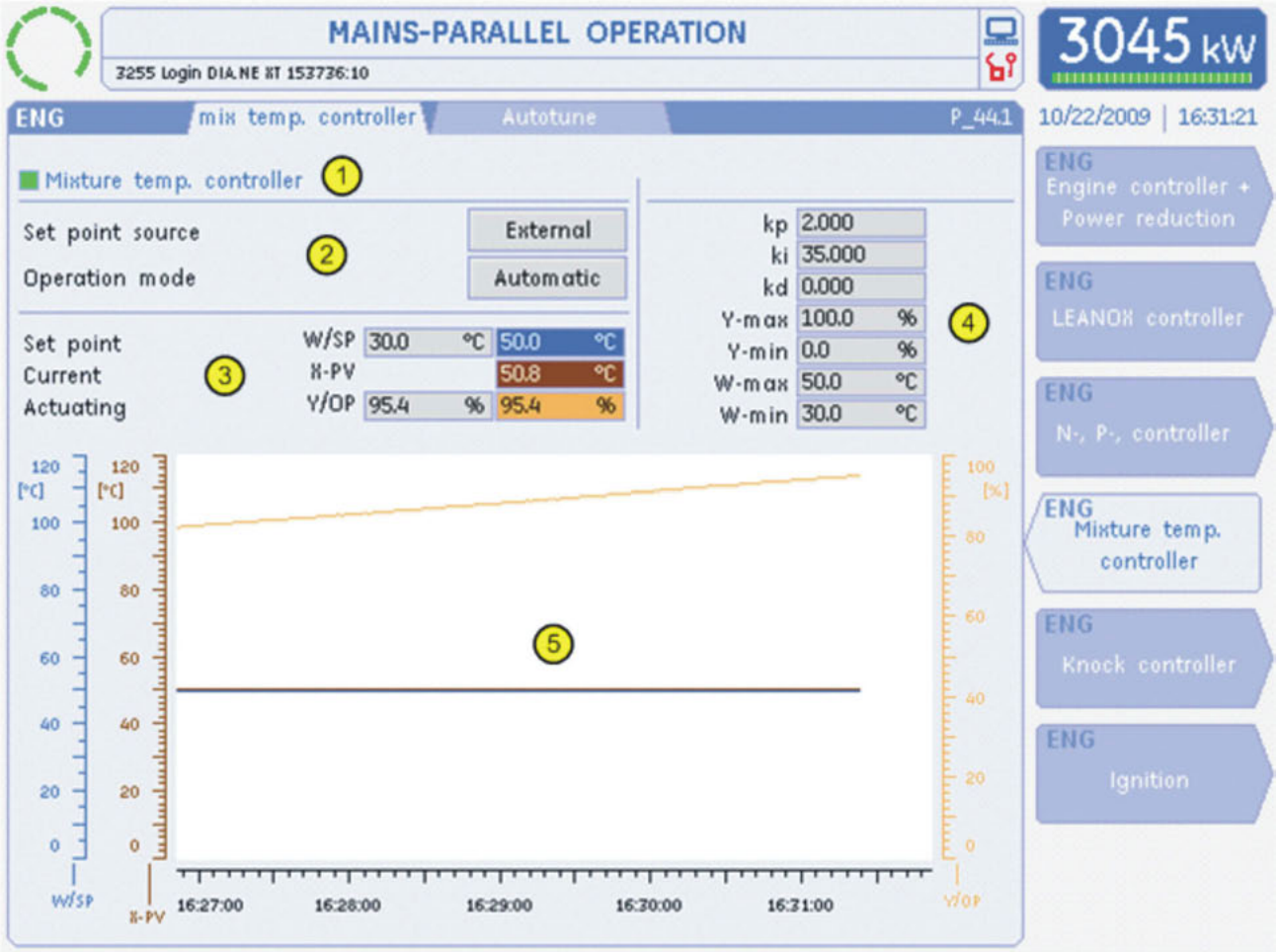

① **Controller information**

The name of the controller is displayed here. If the controller is active, the indicator light changes from white ☐ to green ■.

② **Controller operating mode**

Where this function is available, press the **External** key to toggle the controller between using the internal and external setpoint.

Press the **Automatic** key to toggle the controller between "Automatic" and "Manual" modes. In manual mode, you can change the actuating variable **Y/OP** by hand.

③ **Controller variables**

In this section, you can read off the setpoint value of the controller **W/SP,** the actual value **X-PV** and the actuating signal **Y/OP** and, depending on your access rights and the operating mode, edit them.

④ **Controller parameters**

Only customers who have received training can edit the controller parameters. The following settings are displayed:

GE Proprietary Information: CONFIDENTIAL! Use or disclosure of data contained on this sheet is subject to the restrictions on the cover or on the first page.

Abbreviation	Description	Unit
kp	Proportional component of controller	[1]
ki	Integral component of controller	[ms]
kd	Differnetial component of controller	[ms]
Y-max	Maximum actuating variable	[%]
Y-min	Minimum actuating variable	[%]
W-max	Maximum setpoint value	[°C], [°F], [K]
W-min	Minimum setpoint value	[°C], [°F], [K]

⑤ Online trends

The following controlled variables are displayed as a trend:

Abbreviation	Description	Line colour	Unit
W/SP	Setpoint value	blue	[°C], [°F], [K]
x-PV	actual value	brown	[°C], [°F], [K]
Y/OP	Actuating variable	Orange	[%]

7.5.9 Mixture Temperature Controller Autotuning (P_44.2)

The Mixture Temperature Controller Autotuning screen appears when you press the main **ENG** screen selection key, then **F4** and finally the **TAB** key. Information on the initialisation and use of autotuning for the mixture temperature controller is summarised on this screen.
Only customers who have received training are permitted to set the controllers. Please obtain information on GE Jenbacher's extensive range of training courses.

Note: This screen is only displayed optionally and in Customer View.

GE Proprietary Information: CONFIDENTIAL! Use or disclosure of data contained on this sheet is subject to the restrictions on the cover or on the first page.

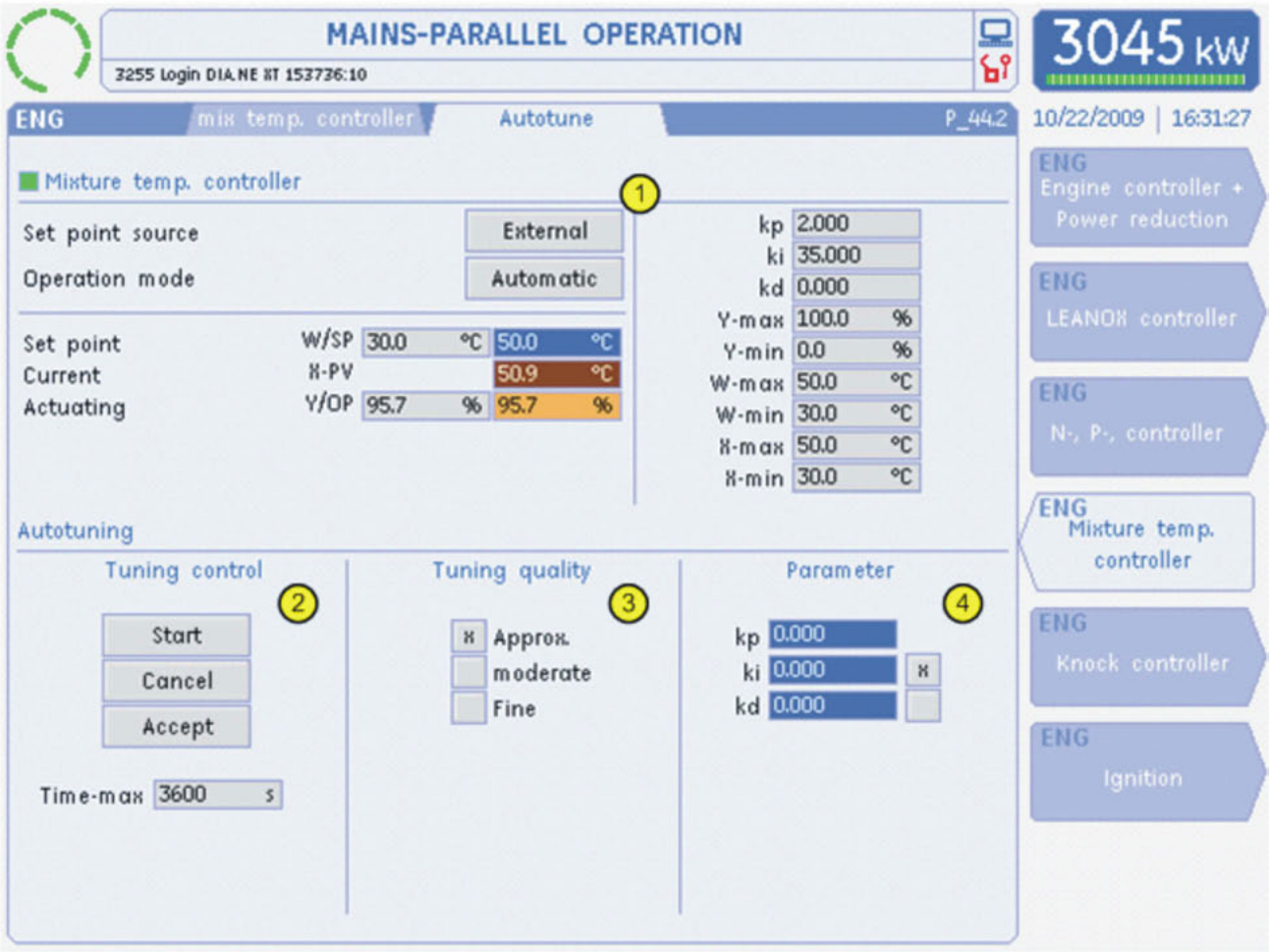

Note: Details on the autotuning controller can be found in TI 1000-0531.

The controller status is displayed in plain text and in the relevant language. The following text can be displayed:

- Autotuning active
- Autotuning parameters calculated
- Invalid value for P component
- Invalid value for I component
- Invalid value for D component
- Y-MAX is less than or equal to Y-MIN
- Error in calculation of controller parameters
- Maximum tuning time has been exceeded
- Invalid value for change to control variable dy-MAX
- Controlled variable X has left the permissible range
- Difference between W and X is too small to start the tuning process

GE Proprietary Information: CONFIDENTIAL! Use or disclosure of data contained on this sheet is subject to the restrictions on the cover or on the first page.

- Error in calculating the increase in the controlled variable
- Y-MAX or Y-MIN was changed during the tuning process

① **Control variables and controller parameters**

An explanation of the individual values can be seen in the Mixture Temperature Controller (P_44.1) screen.

② **Tuning control**

Press the **Start** button to start the tuning process.

Press the **Cancel** button to cancel the tuning process and discard the parameters calculated.

Use **Accept** to copy the parameters calculated.

Enter the time limit for tuning in the **Time-max** box. If this value is exceeded, the tuning process is aborted and a message to that effect appears on the status display.

③ **Tuning quality**

Three modes are available:

approx.:	1 vibration test over 3 periods
moderate :	2 vibration tests over 4 periods
fine :	3 vibration tests over 5 periods

④ **Autotuning parameters**

Calculated parameters:

Displayed here are the parameters which are used during or after the tuning process for

the controller.

kp : Display showing the calculated proportional component.

ki : Display showing the calculated integral component.

kd : Display showing the calculated differential component.

Press the **Accept** button to copy these parameters for the control system.

Selecting the controller type:

The cross in the check box ☒ next to the **ki** or **kd** parameter indicates whether it is advisable to search for control parameters for the selected controller component during the autotuning process.

If you do not want to carry out the calculation for a component, you can uncheck the appropriate check box ☐.

7.5.10 Knock Controller (P_45.1)

The Knock Controller screen appears when you press the main **ENG** screen selection key, followed by **F5**. The main dimensional parameters of the knock control system is summarised on this screen.
Note: This screen is only displayed optionally and in Customer View.

GE Proprietary Information: CONFIDENTIAL! Use or disclosure of data contained on this sheet is subject to the restrictions on the cover or on the first page.

① **Bar graph for knock sensor signal 1**

If the mA signal of a knock sensor (**Knock signal 1**) exceeds the preset control limit, the colour of the bar changes from green to red.

② **Bar graph for knock sensor signal 2**

If the mA signal of a knock sensor (**Knock signal 2**) exceeds the preset control limit, the colour of the bar changes from green to red.

Where SAFI or KLS98 has been installed on the engine as an option, the following screen content is shown:

GE Proprietary Information: CONFIDENTIAL! Use or disclosure of data contained on this sheet is subject to the restrictions on the cover or on the first page.

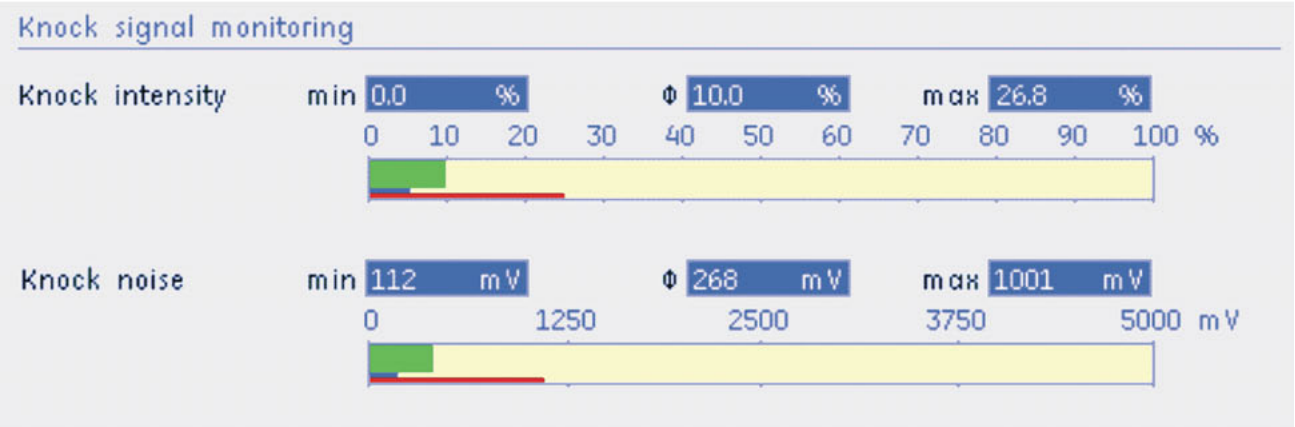

The minimum (**min**) and maximum (**max**) values for the knock intensity (**Knock intensity**) and the knock noise (**Knock noise**) are displayed for all the cylinders.

The average value (**Φ**) across all the cylinders is also displayed.

The permissible limit values for individual variables are shown in narrow red and blue bars below the broad measured value bar. The red bar is the maximum permissible value and the blue bar is the minimum value.

When the measured value moves within the permissible, optimum range, the measured value bar is shown in green. If the values exceed or fall below this level, the bar changes to red or blue respectively.

③ Ignition point reduction

Display showing the nominal ignition point **Nominal** and the ignition point adjusted to prevent knocking **Reduced**. The numerical indication shows crankshaft angle degrees.

The maximum permissible adjustment is 100% of the bar.

④ Power reduction

Display showing the nominal power **Nominal** and the power adjusted to prevent knocking **Reduced**. The numerical indication shows kilowatts.

The maximum permissible adjustment is 100% of the bar.

⑤ Mixture temperature reduction

Display showing the setpoint mixture temperature **Nominal** and the temperature adjusted to prevent knocking **Reduced**. The numerical indication shows degrees Celsius, Fahrenheit or Kelvin.

The maximum permissible adjustment is 100% of the bar.

7.5.11 Ignition (P_46.1)

The Ignition screen appears when you press the main **ENG** screen selection key, followed by **F6**. The main information on the ignition system is summarised on this screen.
Note: Only ① is displayed in Customer View in this screen.

GE Proprietary Information: CONFIDENTIAL! Use or disclosure of data contained on this sheet is subject to the restrictions on the cover or on the first page.

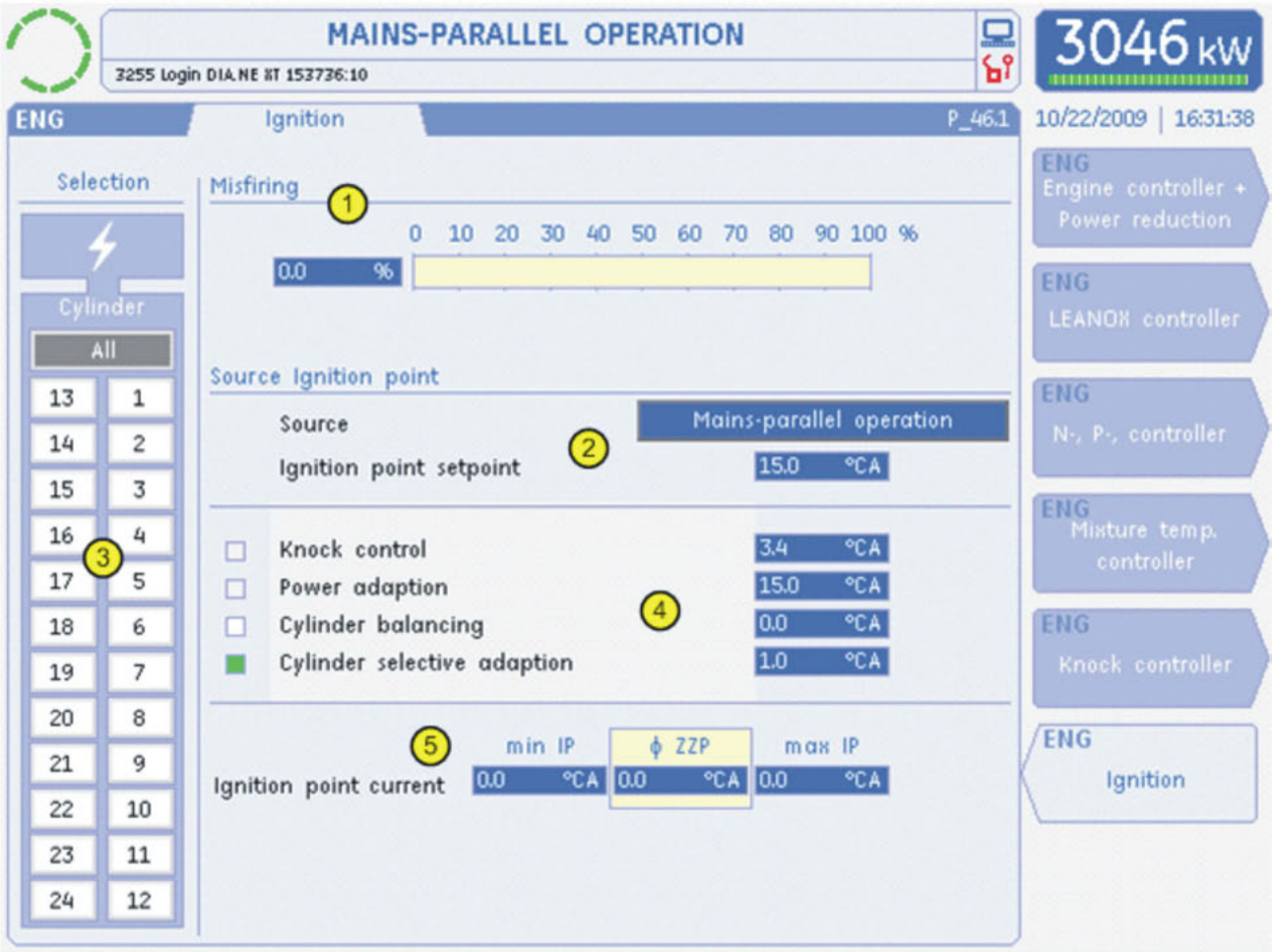

① Misfire detection

The integrator for the misfire monitoring system is displayed here.

Power will be reduced if the engine misfires frequently. The number of misfires is counted by an integrator. This integrator will slowly be scaled down again during any period in which there is no misfiring.

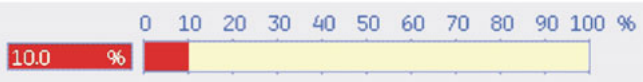

Power reduction is started when the integrator is at 50%. A power reduction to up to 50% is performed proportionally until the misfiring integrator reaches 100%.

② Ignition point source

Up to three sources are available for the ignition point:

- Engine start
- Mains parallel operation
- Isolated operation

GE Proprietary Information: CONFIDENTIAL! Use or disclosure of data contained on this sheet is subject to the restrictions on the cover or on the first page.

The source currently in use is displayed at **Source**.

The general setpoint value preset for all the cylinders is displayed at **Ignition point setpoint**.

③ Cylinder selection

You can use this graphical selection aid to select either a specific cylinder or an overview of all the cylinders (average value). Use the cursor keys to make the selection.

④ Ignition point adjustment

The current ignition point consists of the following control interventions:

Knock control	Offset from knock control system
Power adaptation	Offset dependant on actual power
Cylinder balancing	Offset for cylinder balancing
Cylinder-selective adaptation	Offset for cylinder-selective operating point optimisation

You can see which of the controllers is active when the corresponding indicator light changes from white ☐ to green ■.

Control interventions may be performed in parallel, which you can recognise because more than one check box has changed to green (= active).

The indications are selected using the cylinder selection system described in ③ for each selected cylinder. When **All** has been selected, the average value across all cylinders is displayed.

⑤ Current ignition point

The current ignition point for a cylinder or the average is displayed in the **Ignition point current** box. The method for selecting the cylinder is described in ③.

In addition, the ignition point of the cylinder with the minimum (**min**) and maximum (**max**) value is displayed.

7.6 Cylinder information (CYL)

The **CYL** screen group contains information on the current status of the cylinders. Optionally, depending on the engine configuration, this allows you to view the ignition voltage, ignition point, knock detection and exhaust gas temperature.

Note: Only the Cylinder measured values (P_51.1) screen and, optionally depending on the engine configuration, the Ignition Voltage (P_52.1) screen, is displayed in Customer View.

7.6.1 Cylinder Measured Values (P_51.1)

The Cylinder Measured Values screen appears when you press the **CYL** screen selection key. It shows an overview of the status of the cylinder measured values.

Note: This screen is considerably reduced in Customer View and is therefore displayed extremely clearly (see below).

GE Proprietary Information: CONFIDENTIAL! Use or disclosure of data contained on this sheet is subject to the restrictions on the cover or on the first page.

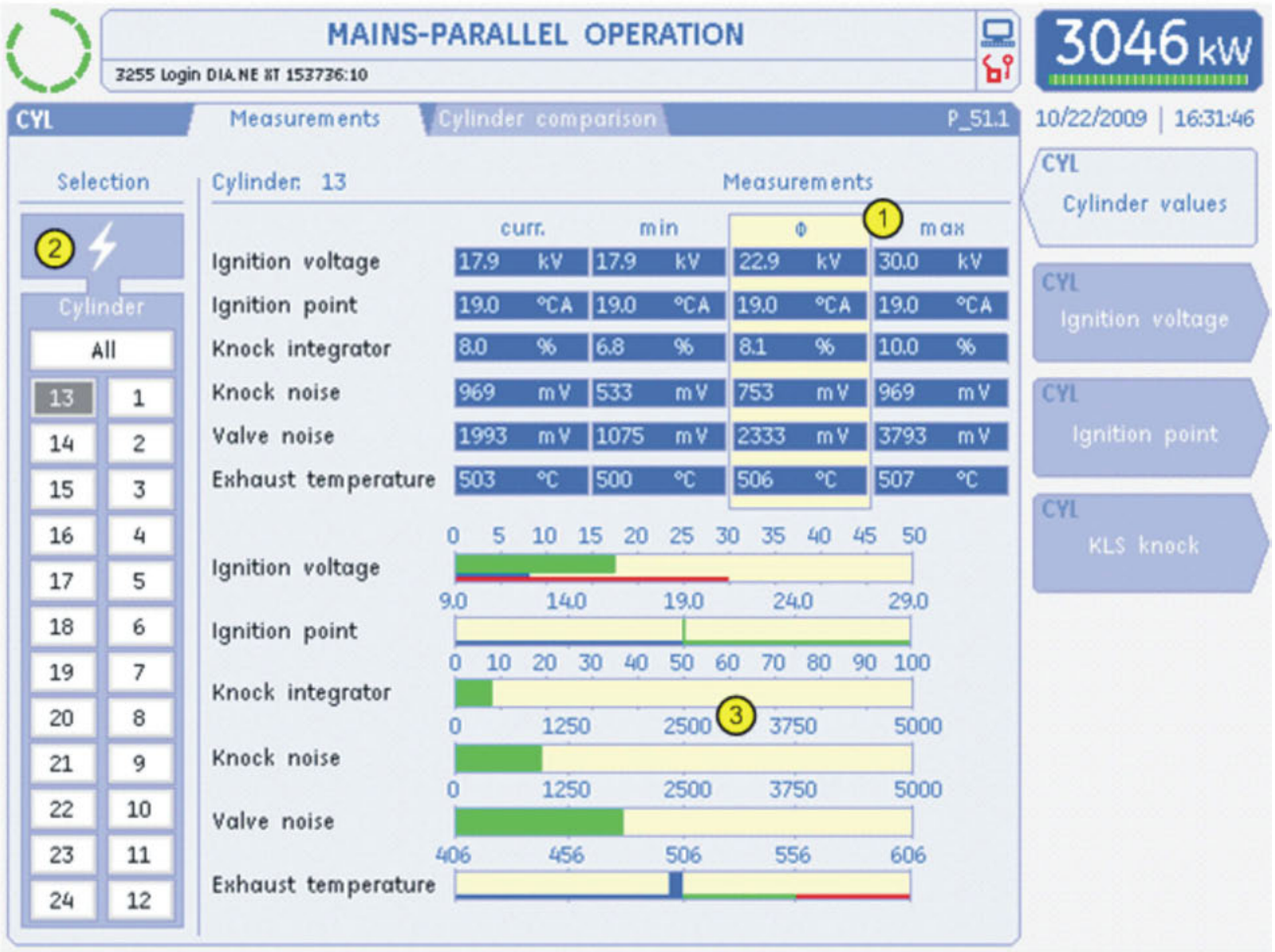

① **Numerical data display**

Optionally, the value of a cylinder selected as described in ② (**curr.**), the minimum value (**min**), the average (**Φ**) across all the cylinders and the maximum value (**max**) of all the cylinders are displayed for the following measured values

Reference text	Description	Unit
Ignition voltage	Ignition voltage	[kV]
Ignition point	Ignition point	[°Crankshaft angle]
Knock integrator	Knock integrator	[%]
Knock noise	Knock noise	[mV]
Valve noise	Valve noise	[mV]
Exhaust temperature	Exhaust gas temperature	[°C], [°F], [K]

② **Cylinder selection**

GE Proprietary Information: CONFIDENTIAL! Use or disclosure of data contained on this sheet is subject to the restrictions on the cover or on the first page.

You can use this graphical selection aid to select either a specific cylinder or an overview of all the cylinders (average value). Use the cursor keys to make the selection.

If **All** is selected, only the maximum, minimum and average values will now be displayed.

③ Graphical data display

Optionally, in addition to the numerical display, the current measured values are displayed in a bar graph for the cylinders selected at ②.

The permissible limit values for individual variables are shown in narrow red and blue bars below the broad measured value bar. The red bar is the maximum permissible value and the blue bar is the minimum value.

When the measured value moves within the permissible, optimum range, the measured value bar is shown in green. If the values exceed or fall below this level, the bar changes to red or blue respectively.

Display in Customer View

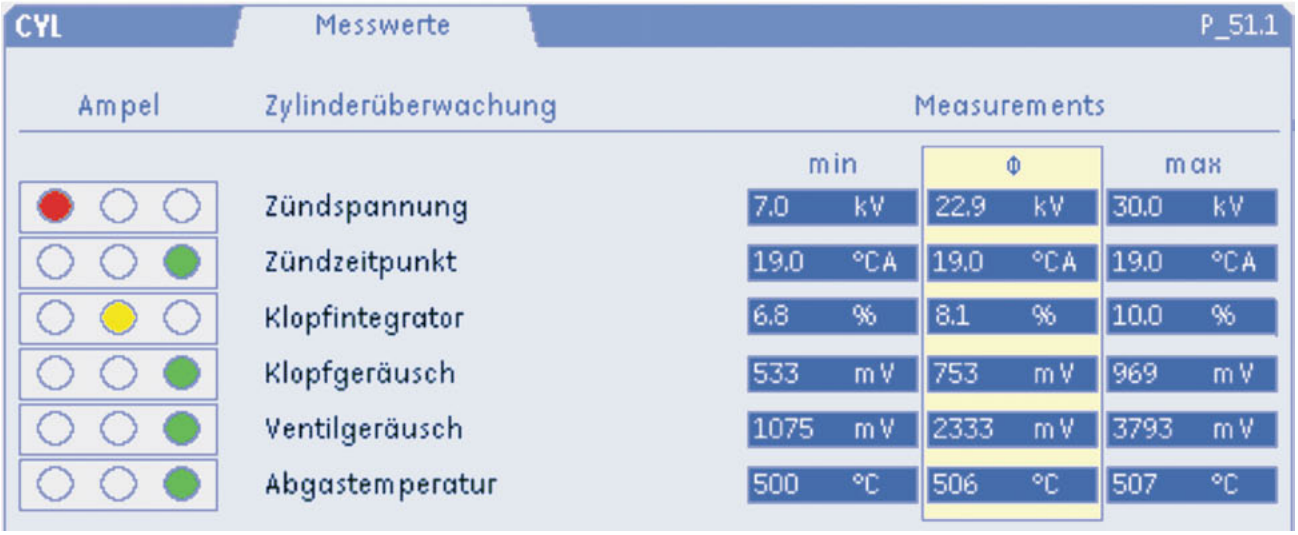

In Customer View, the information is reduced to the essential. The values for the individual cylinders are no longer displayed but the minimum, average and maximum values are shown.

"Traffic lights" are shown as a new display element. They provide an overview of the status of all the cylinders in the engine.

The following status displays may be generated:

Green → everything OK. Each cylinder is operating with the tolerance range

set for this measured value.

GE Proprietary Information: CONFIDENTIAL! Use or disclosure of data contained on this sheet is subject to the restrictions on the cover or on the first page.

Yellow → warning. At least one cylinder is not operating with the tolerance range set for this measured value.

Red → shutdown. At least one cylinder is not operating with the tolerance range set for this measured value. This may result in an engine shutdown immediately or in the near future.

7.6.2 Cylinder Comparison (P_51.2)

The Cylinder Comparison screen appears when you press the main **CYL** screen selection key, followed by **TAB**. Depending on the engine configuration, up to 5 different measured values for each cylinder can be displayed in parallel.

Note: This screen is not displayed in Customer View.

① **Cylinder selection**

GE Proprietary Information: CONFIDENTIAL! Use or disclosure of data contained on this sheet is subject to the restrictions on the cover or on the first page.

If there are 5 columns, one measured value available on the engine can be displayed for each cylinder. The setting is saved when you change screens.

The following measured values can be selected:

Reference text	Description	Unit
Exh. Temp.	Exhaust gas temperature	[°C], [°F], [K]
Ignition p.	Ignition point	[°Crankshaft angle]
High volt.	Ignition voltage	[kV]
Knock int.	Knock integrator	[%]
Knock signal	Knock noise	[mV]
Valve signal	Valve noise	[mV]

7.6.3 Ignition Voltage Measurement (P_52.1)

The Ignition Voltage Measurement screen appears when you press the main **CYL** screen selection key, followed by **F2**. It shows an overview of the measured values for ignition voltages.

Note: This screen is only displayed when the ignition voltage measurement option has been installed on the engine.

GE Proprietary Information: CONFIDENTIAL! Use or disclosure of data contained on this sheet is subject to the restrictions on the cover or on the first page.

① Graphical display of the ignition voltage

The ignition voltages of the individual cylinders are displayed in a bar graph.

The measured value bar is shown in green as long as it is within the tolerance range.

The tolerance range is visualised by means of two narrow bars in red and blue below the actual, broad measured value bar.

The blue narrow bar represents the minimum permissible ignition voltage. If one of the ignition voltages falls below this limit value, the colour of the bar will change from green to blue.

The red narrow bar represents the maximum permissible ignition voltage. If one of the ignition voltages exceeds this limit value, the colour of the bar will change from green to red.

② Numerical display of the ignition voltage

The ignition voltages of the individual cylinders are displayed numerically in Kilovolts.

③ Minimum, maximum and average ignition voltage

The maximum value (**max**) and the minimum value (**min**) of all the cylinders and the average (**Φ**) across all the cylinders are displayed here.

GE Proprietary Information: CONFIDENTIAL! Use or disclosure of data contained on this sheet is subject to the restrictions on the cover or on the first page.

7.6.4 Ignition Point Display (P_53.1)

The Ignition Point Display screen appears when you press the main **CYL** screen selection key, followed by **F3**. It shows an overview of the current ignition point settings for the individual cylinders.

Note: This screen is only displayed in Expert View when an ignition system with selective ignition point setting has been installed on the engine.

① Graphical display of ignition points

The ignition point settings of the individual cylinders are displayed in a bar graph.

The measured value bar is shown in green as long as it is within the tolerance range.

The tolerance range is visualised by means of two narrow bars in red and blue below the actual, broad measured value bar.

A blue narrow bar represents the minimum permissible ignition point and the red bar represents the maximum permissible ignition point. In this display it is not possible to exceed or fall below the values.

The ignition points are displayed in crankshaft angle degrees before top dead centre.

The individual ignition points only vary if the individual knock control system has been activated by KLS/SAFI.

GE Proprietary Information: CONFIDENTIAL! Use or disclosure of data contained on this sheet is subject to the restrictions on the cover or on the first page.

② Numerical display of ignition points

The ignition points are additionally displayed numerically in crankshaft angle degrees before top dead centre.

③ Minimum, maximum and average ignition voltage

The maximum value (**max**) and the minimum value (**min**) of all the cylinders and the average (**Φ**) across all the cylinders are displayed here.

④ Ignition energy level

The ignition energy shown is the energy supplied to the ignition coils. 100% equals the maximum ignition energy of the ignition system. This value is pre-set in the parameter management system.

This value is not displayed in the SAFI system.

⑤ Ignition self-test

This button is only enabled if the operation mode selector switch is in "OFF" position and the user has "Customer (10)" authorisation or higher.

Using the self-test function, you can test the ignition voltage supply of the ignition coils while the engine is at standstill. The self test is automatically de-activated after 10 minutes.

Press the key to activate the test, which you can also terminate before the 10 minutes have passed.

7.6.5 Ignition Output Error (P_53.2)

The Ignition Output Error screen appears when you press the main **CYL** screen selection key, then **F3**, followed by the **TAB** key. It shows an overview of the current ignition point settings for the individual cylinders, plus the ignition deviation errors and ignition duration errors.

Note: This screen is only displayed in Expert View when a SAFI ignition system has been installed on the engine.

GE Proprietary Information: CONFIDENTIAL! Use or disclosure of data contained on this sheet is subject to the restrictions on the cover or on the first page.

① **Display of ignition points**

The ignition point settings of the individual cylinders are displayed in a bar graph and as a numerical value.

② **Ignition delay errors**

Display showing for each cylinder how often no ignition spark has been produced within the last ten engine cycles.

③ **Combustion time errors**

Display showing for each cylinder how often the permissible combustion-time tolerance has been exceeded and/or underrun within the last ten engine cycles.

7.6.6 Knock Integrator (P_54.1)

The Knock Integrator screen appears when you press the main **CYL** screen selection key, followed by **F4**. It shows an overview of the current integrator values of the knock control system for the individual cylinders.

Note: This screen is only displayed in Expert View when a cylinder-selective knock monitoring system (SAFI/KLS98) has been installed on the engine.

GE Proprietary Information: CONFIDENTIAL! Use or disclosure of data contained on this sheet is subject to the restrictions on the cover or on the first page.

① Graphical display of knock integrators

The knock integrators are displayed as a percentage. Depending on the individual percentages, up to three knock prevention measures can be set. Once an initial control limit (e.g. 10%) is reached, the knock control system retards the ignition point. When a second limit value is reached (e.g. over 50%), the power is reduced. If, despite the ignition point adjustment and the reduction in the engine power, a 100% knocking intensity value is reached, the engine will be switched off. In addition, the mixture temperature will be lowered where the plant control system allows.

② Numerical display of knock integrators

The knock integrators are also displayed numerically as a percentage.

③ Minimum, maximum and average integrator value

The maximum value (**max**) and the minimum value (**min**) of all the cylinders and the average (**Φ**) across all the cylinders are displayed here.

7.6.7 Knock Noise (P_54.2)

The Knock Noise screen appears when you press the main **CYL** screen selection key, then **F4**, followed by the **TAB** key. It shows an overview of the current knock noise for the individual cylinders.

GE Proprietary Information: CONFIDENTIAL! Use or disclosure of data contained on this sheet is subject to the restrictions on the cover or on the first page.

Note: This screen is only displayed in Expert View when a cylinder-selective knock monitoring system (SAFI/KLS98) has been installed on the engine.

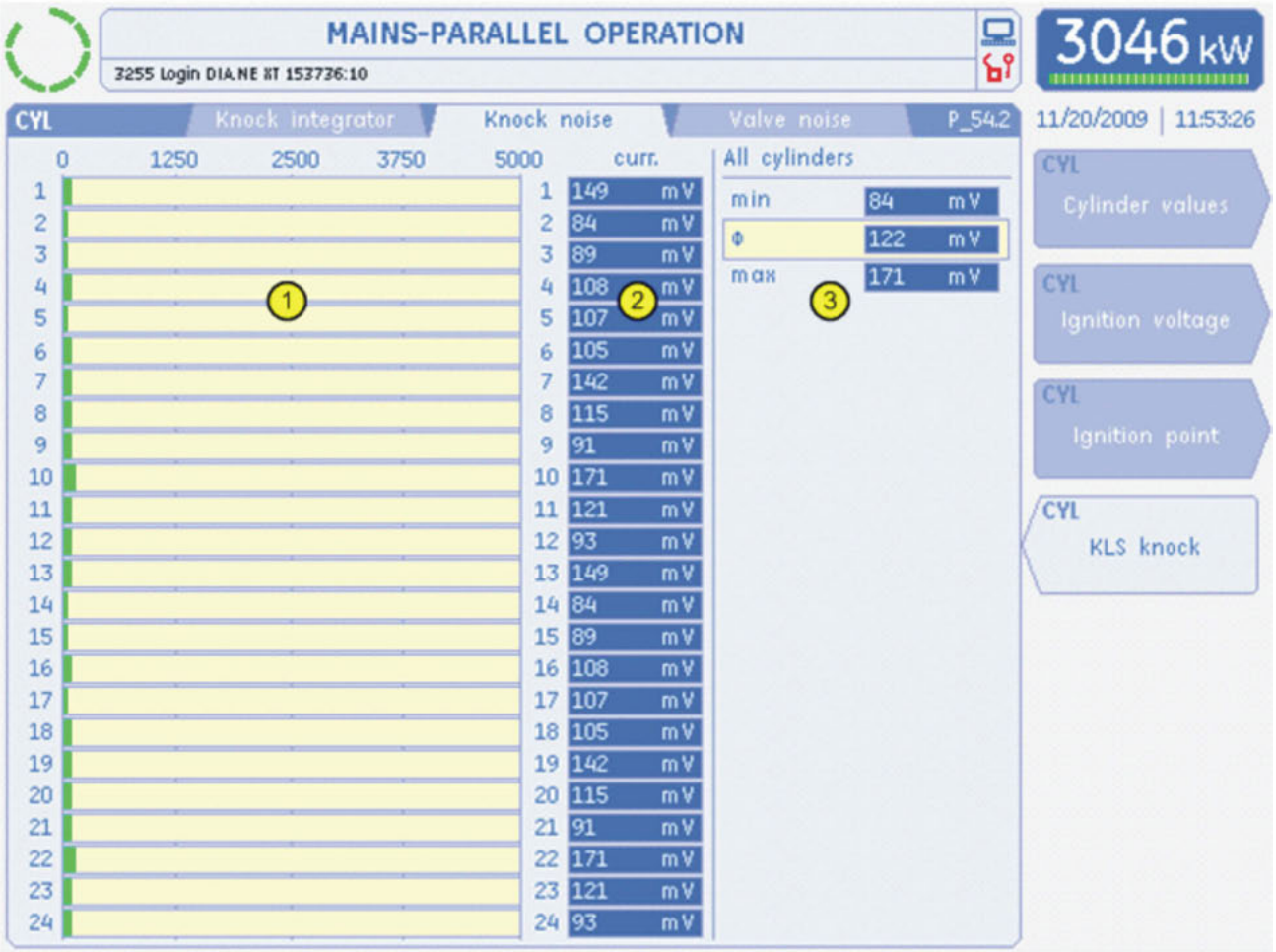

① Graphical display of knock noise

The knock noise is displayed as a percentage. The knock noise is used as a basis for increasing or reducing the knock integrator values.

② Numerical display of the knock noise

The knock noise is also displayed numerically in millivolts.

③ Minimum, maximum and average knock noise

The maximum value (**max**) and the minimum value (**min**) of all the cylinders and the average (**Φ**) across all the cylinders are displayed here.

7.6.8 Valve Noise (P_54.3)

The Valve Noise screen appears when you press the main **CYL** screen selection key, then **F4**, followed by **TAB** twice. It shows an overview of the current valve noise for the individual cylinders.

GE Proprietary Information: CONFIDENTIAL! Use or disclosure of data contained on this sheet is subject to the restrictions on the cover or on the first page.

Note: This screen is only displayed in Expert View when a cylinder-selective knock monitoring system (SAFI/KLS98) has been installed on the engine.

① Graphical display of valve noise

The valve noise is displayed as mV. If a limit value (2000 mV) is exceeded, a trip warning (maximum valve noise) will be generated in the alarm management system. Possible causes could include excessive valve play, valve spring breakage, bearing damage, etc.

② Numerical display of the knock noise

The valve noise is also displayed numerically in millivolts.

③ Minimum, maximum and average valve noise

The maximum value (**max**) and the minimum value (**min**) of all the cylinders and the average (**Φ**) across all the cylinders are displayed here.

GE Proprietary Information: CONFIDENTIAL! Use or disclosure of data contained on this sheet is subject to the restrictions on the cover or on the first page.

7.7 Exhaust system information (EXH)

The **EXH** screen group contains information on the current measured values for the exhaust system. Optionally, depending on the engine configuration, this allows you to view the exhaust gas collector temperatures, the exhaust gas temperatures per cylinder, turbo speeds and exhaust gas treatment systems (thermal reactor, CODINOX).

Note: Only the Exhaust System Overview (P_61.1) screen is displayed in Customer View.

7.7.1 Exhaust System Overview (P_61.1)

The Exhaust System Overview screen appears when you press the main **EXH** screen selection key. It shows an overview of the status of the exhaust system.

Note: This screen is considerably reduced in Customer View and is therefore displayed extremely clearly (see below).

The measuring points listed below may be displayed, depending on the engine configuration.

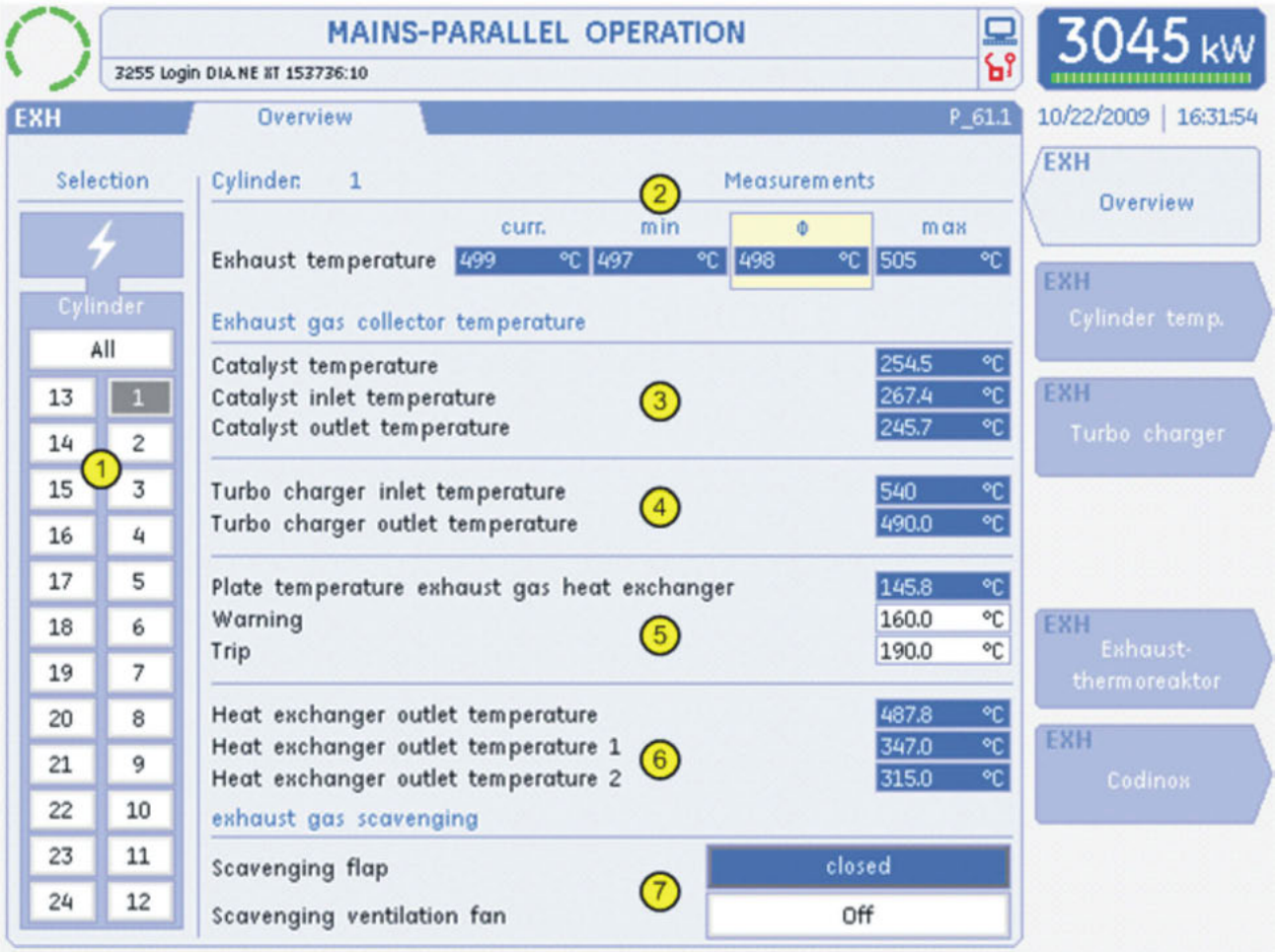

① Cylinder selection

You can use this graphical selection aid to select a specific cylinder. Use the cursor keys to make the selection.

② Exhaust gas temperature at cylinder outlet

GE Proprietary Information: CONFIDENTIAL! Use or disclosure of data contained on this sheet is subject to the restrictions on the cover or on the first page.

The current value (**curr.**), the maximum value (**max**) and the minimum value (**min**) of all the cylinders and the average (**Φ**) across all the cylinders are displayed here.

③ **Display showing the catalytic converter temperatures**

The temperatures before, in and after the catalytic converter are displayed.

④ **Display showing turbo temperatures**

The temperatures before and after the turbocharger are visualised here.

⑤ **Pipe plate temperature**

The current pipe plate temperature is displayed here.

In addition, if you are authorised at user level "Customer" (10) or above, you can enter the limit values for **Warning** and **Trip**.

⑥ **Display showing temperatures at heat exchanger outlet**

Depending on the plant, the heat exchanger outlet temperatures can be displayed here.

⑦ **Status display for scavenging**

The status of the scavenging air valve and the scavenging air fan are shown here.

Display in Customer View

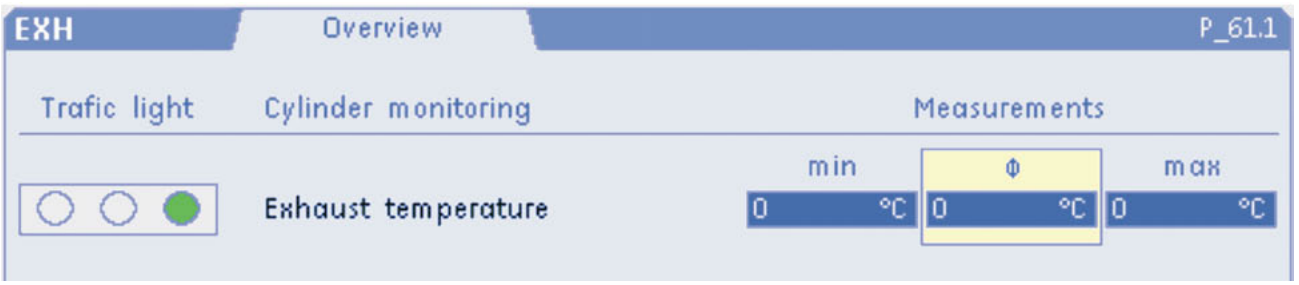

In Customer View, the information is reduced to the essential. The values for the individual cylinders are no longer displayed but the minimum, average and maximum values very probably will be.

"Traffic lights" are shown as a new display element. They provide an overview of the status of all the cylinders in the engine.

The following status displays may be generated:

Green → everything OK. Each cylinder is operating with the tolerance range

set for this measured value.

Yellow → warning. At least one cylinder is not operating with the tolerance range

GE Proprietary Information: CONFIDENTIAL! Use or disclosure of data contained on this sheet is subject to the restrictions on the cover or on the first page.

set for this measured value.

Red → shutdown. At least one cylinder is not operating with the tolerance range

set for this measured value. This may result in an engine shutdown immediately or in the near future.

7.7.2 Exhaust Gas Temperature at Cylinder Outlet (P_54.1)

The Cylinder Temperature screen appears when you press the main **EXH** screen selection key, followed by **F2**. It shows an overview of the current exhaust gas temperature for the individual cylinders.

Note: This screen is only displayed in Expert View when a cylinder-selective exhaust gas measurement system has been installed on the engine.

① Graphical display of exhaust gas temperatures

Optionally, the current measured values for the exhaust gas temperatures are displayed here in addition to the numerical display.

GE Proprietary Information: CONFIDENTIAL! Use or disclosure of data contained on this sheet is subject to the restrictions on the cover or on the first page.

The permissible limit values for individual variables are shown in narrow red and blue bars below the broad measured value bar. The red bar is the maximum permissible value and the blue bar is the minimum value.

When the measured value moves within the permissible, optimum range, the measured value bar is shown in green. If the values exceed or fall below this level, the bar changes to red or blue respectively.

② Numerical display of the exhaust gas temperatures

You can choose to display the exhaust gas temperatures per cylinder in °C, °F or K.

③ Minimum, maximum and average cylinder temperature

The maximum value (**max**) and the minimum value (**min**) of all the cylinders and the average (**Φ**) across all the cylinders are displayed here.

7.7.3 Turbocharger (P_54.1)

The Turbocharger screen appears when you press the main **EXH** screen selection key, followed by **F3**. It shows the speeds of the exhaust gas turbocharger.

Note: This screen is only displayed in Expert View when a turbocharger speed measurement system has been installed on the engine.

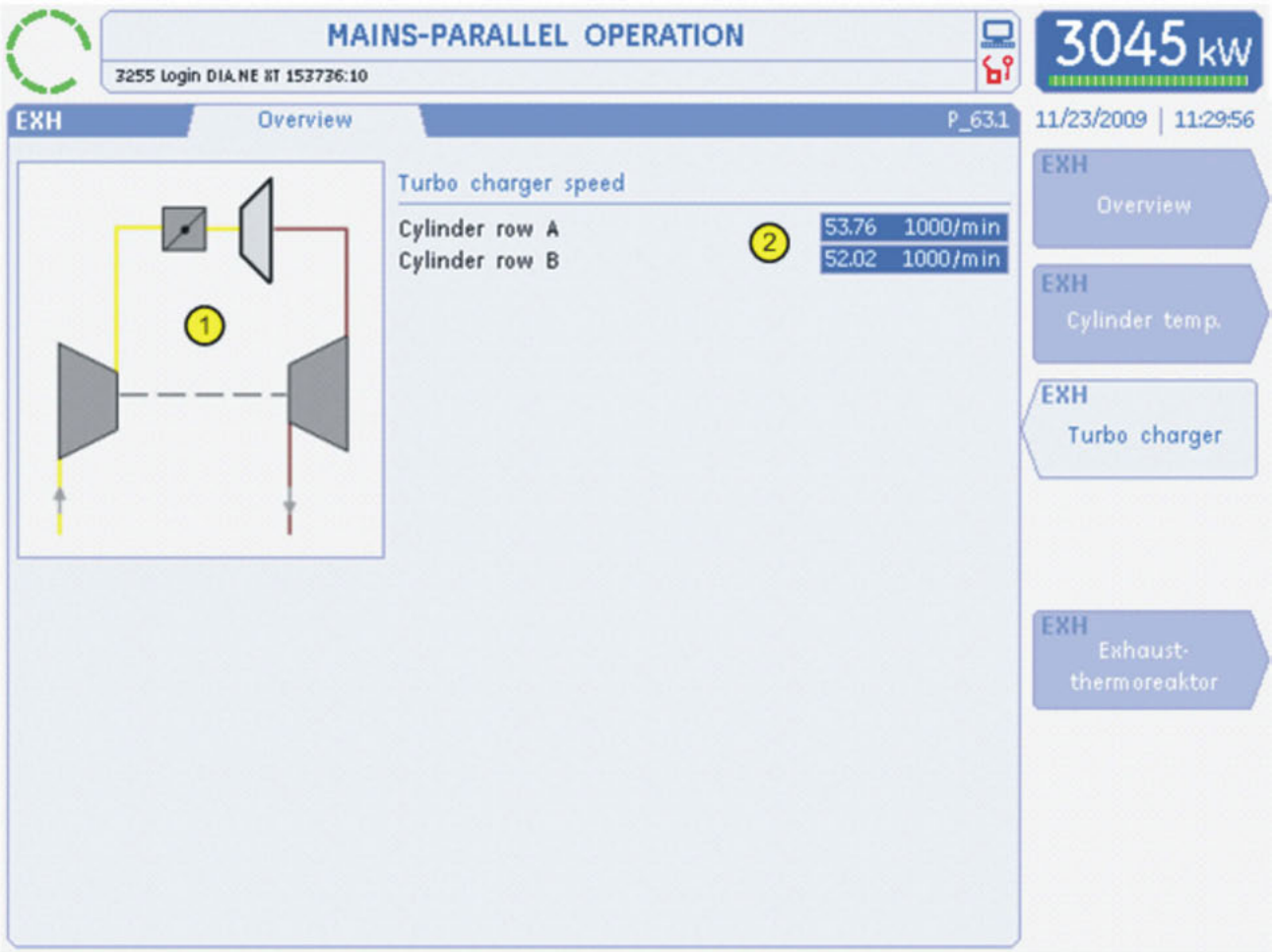

GE Proprietary Information: CONFIDENTIAL! Use or disclosure of data contained on this sheet is subject to the restrictions on the cover or on the first page.

① **Turbocharger diagram**

A diagram of the turbocharging process is displayed here.

② **Turbocharger speed**

The speeds from the optional turbocharger speed sensors are displayed here in 1000/min. If two speeds are shown, this means that a turbocharger speed sensor has been installed for each cylinder bank (A + B).

7.7.4 Thermal Reactor (P_61.1)

The Thermal Reactor screen appears when you press the main **EXH** screen selection key, followed by **F5**. The screen shows the status of cleaning as well as an overview of the measured values.

Note: This screen is only displayed in Expert View when an exhaust gas thermal reactor has been installed downstream of the engine.

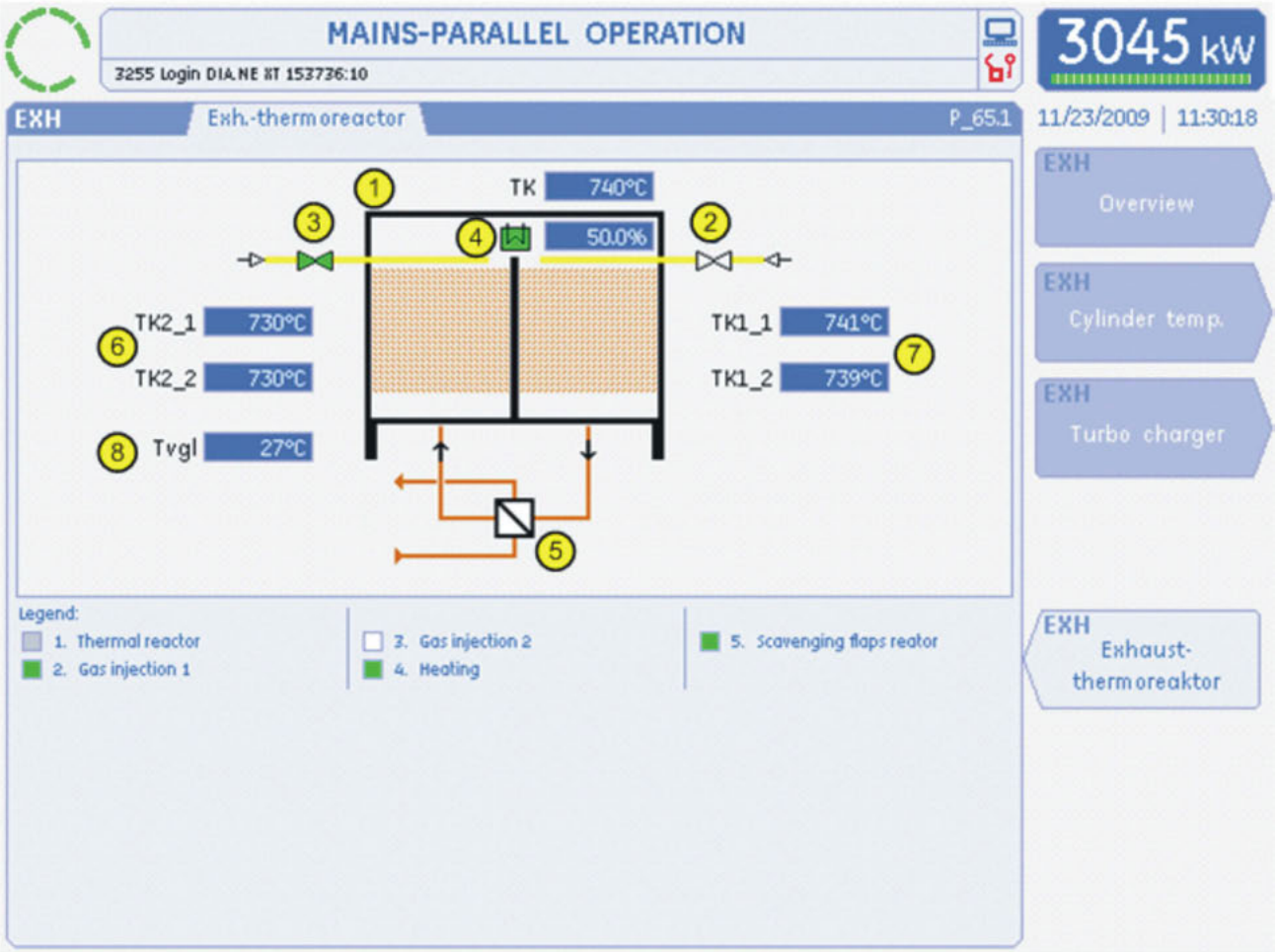

① **Thermal reactor**

The reactor is displayed schematically. The average temperature of the active reactor is displayed at **TK**.

② **Gas spray injection 1**

GE Proprietary Information: CONFIDENTIAL! Use or disclosure of data contained on this sheet is subject to the restrictions on the cover or on the first page.

The gas injection in Chamber 1 is shown using arrows in the direction of flow and by the valves changing colour to green.

③ **Gas spray injection 2**

The gas injection in Chamber 2 is shown using arrows in the direction of flow and by the valves changing colour to green.

④ **Electric heating**

The operation of the electric heating system is displayed by a colour change to green. The percentage value indicates the heating's power setting.

⑤ **Direction of flow**

The direction of flow of the gas is shown using the shunt symbol and additional arrows.

⑥ **Temperatures in Chamber 2**

Two temperature measuring points (**TK2_1** and **TK2_2**) per chamber are displayed in degrees Celsius, degrees Fahrenheit or Kelvin.

⑦ **Temperatures in Chamber 1**

Two temperature measuring points (**TK1_1** and **TK1_2**) per chamber are displayed in degrees Celsius, degrees Fahrenheit or Kelvin.

⑧ **Reference temperature**

Display showing the ambient temperature as a reference measurement for the temperatures

(**Tvgl**) measured in the reactor in degrees Celsius, degrees Fahrenheit or Kelvin.

7.7.5 Codinox (P_66.1)

The Codinox screen appears when you press the main **EXH** screen selection key, followed by **F6**. The screen shows the status of exhaust gas purification as well as an overview of the measured values.

Note: This screen is only displayed in Expert View when a Codinox exhaust gas purification system has been installed downstream of the engine.

GE Proprietary Information: CONFIDENTIAL! Use or disclosure of data contained on this sheet is subject to the restrictions on the cover or on the first page.

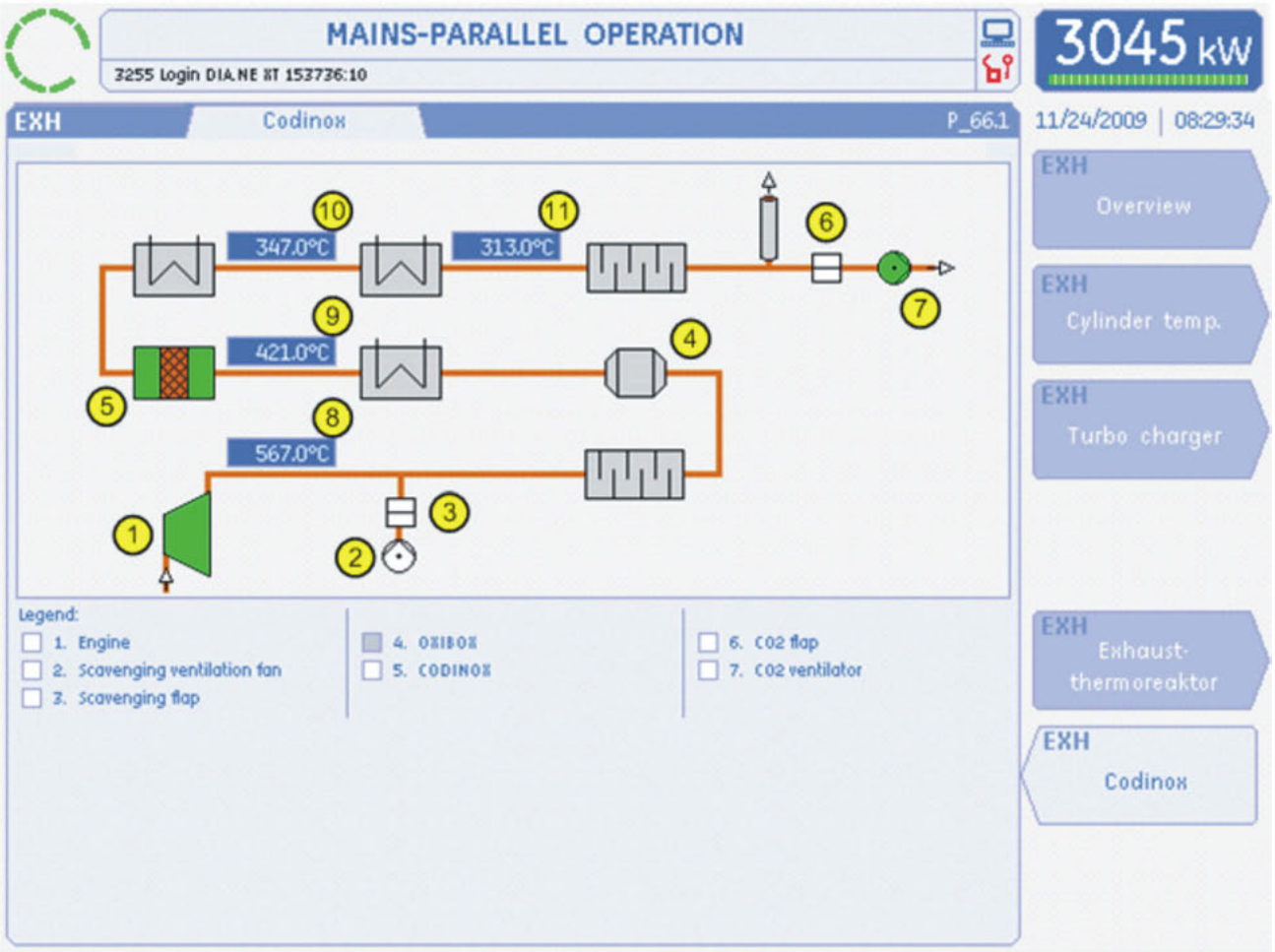

① engine operation

The operation of the engine is indicated by a colour change to green.

② Flushing fan

Depending on the engine type, the fan for flushing the exhaust gas system can be shown here. Before every engine start the exhaust gas system is flushed to prevent unwanted misfiring. The operation is displayed by the colour change to green.

③ Scavenging air valve

Depending on the engine type, the valve for flushing the exhaust gas system can be shown here. Before every engine start the exhaust gas system is flushed to prevent unwanted misfiring. To this end the scavenging air valve is opened. When the engine is in operation, this valve remains closed.

④ Oxibox

The Oxibox is not activated and does not provide any electrical responses.

⑤ CODINOX reactor

If the CODINOX reactor is active, this is indicated by a change of colour to green.

GE Proprietary Information: CONFIDENTIAL! Use or disclosure of data contained on this sheet is subject to the restrictions on the cover or on the first page.

⑥ CO2 valve

If the valve is opened, the exhaust gases are uses as a fertilizer. If the valve is closed, the exhaust gases are released into the open air via the exhaust gas system. To indicate the direction of flow, arrows are shown after the fan or above the exhaust gas stack symbol.

⑦ CO2 fan

When the CO2 valve is opened, the fan is in operation.

⑧ Temperature at waste heat boiler inlet

The exhaust gas temperature at the waste heat boiler inlet is displayed in degrees Celsius, degrees Fahrenheit or Kelvin.

⑨ Temperature at catalytic converter inlet

The exhaust gas temperature at the waste catalytic converter inlet is displayed in degrees Celsius, degrees Fahrenheit or Kelvin.

⑩ Temperature at heat exchanger outlet 1

The exhaust gas temperature at heat exchanger outlet 1 is displayed in degrees Celsius, degrees Fahrenheit or Kelvin.

⑪ Temperature at heat exchanger outlet 2

The exhaust gas temperature at heat exchanger outlet 2 is displayed in degrees Celsius, degrees Fahrenheit or Kelvin.

7.8 Plant controllers (CTR)

The **CTR** screen group contains information on the plant controllers. The individual controllers are displayed in an overview and individually.

Note: Only the Controller Overview (P_71.1) screen and the Controller Details (P_71.2) screen are displayed in Customer View.

7.8.1 Plant Controller Overview (P_71.1)

The Plant Controller Overview screen appears when you press the **CTR** screen selection key. It shows an overview of the status of all plant controllers.

Note: The installed plant controllers are displayed according to the engine configuration.

GE Proprietary Information: CONFIDENTIAL! Use or disclosure of data contained on this sheet is subject to the restrictions on the cover or on the first page.

① **Controller status display**

If the controller is active, the indicator light changes from white ☐ to green ■. It tries to achieve its setpoint value.

② **Plant controller selection**

Use the cursor keys to focus on a plant controller name. If you press TAB to switch from the Overview screen to the Controller Details screen, the information for the selected controller will be displayed.

③ **Numerical setpoint and actual value display**

The setpoint value (**set**) and the actual value (**curr.**) are displayed, including the unit.

④ **Setpoint value and actual value in bar graph**

The setpoint and actual values are shown in a bar graph representing 0 - 100% of the measurement range. This representation shows quickly whether or not there is a substantial controller deviation.

⑤ **Controller actuating signal**

The output value of the actuating signal is displayed as a percentage.

GE Proprietary Information: CONFIDENTIAL! Use or disclosure of data contained on this sheet is subject to the restrictions on the cover or on the first page.

7.8.2 Plant Controller Details (P_71.2)

The Plant Controller Details screen appears when you press the main **CTR** screen selection key, followed by **TAB**. The main controller variables and a trend analysis for a plant controller are summarised on this screen. Only customers who have received training are permitted to set the controllers. Please obtain information on GE Jenbacher's extensive range of training courses.

Note: This screen is only displayed as an option.

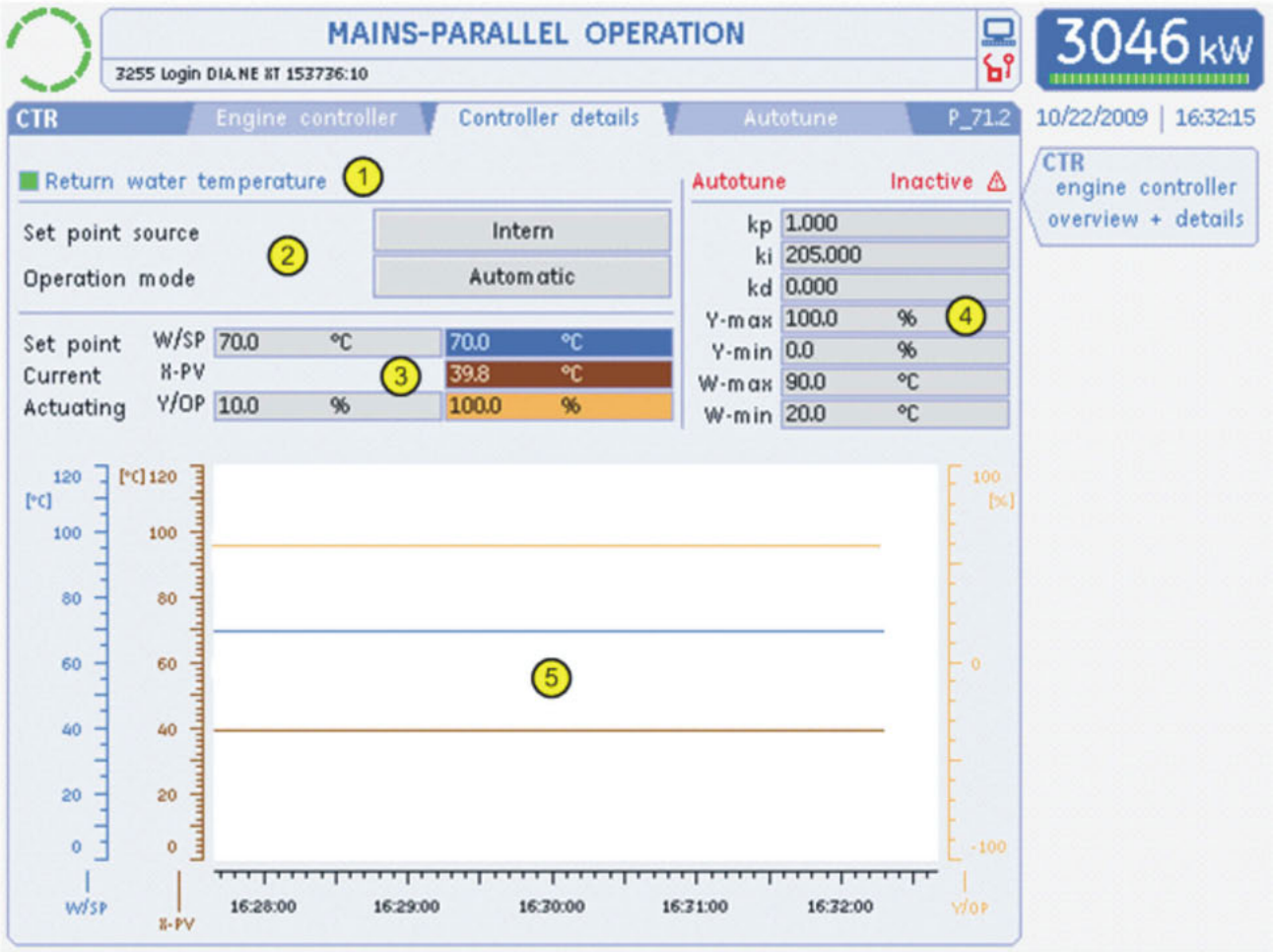

① **Controller information**

The name of the controller is displayed here. If the controller is active, the indicator light changes from white ☐ to green ■.

② **Controller operating mode**

Where this function is available, press the **External** key to toggle the controller between using the internal and external setpoint.

Press the **Automatic** key to toggle the controller between "Automatic" and "Manual" modes. In manual mode, you can change the actuating variable **Y/OP** by hand.

GE Proprietary Information: CONFIDENTIAL! Use or disclosure of data contained on this sheet is subject to the restrictions on the cover or on the first page.

③ Controller variables

In this section, you can read off the setpoint value of the controller **W/SP,** the actual value **X-PV** and the actuating signal **Y/OP** and, depending on your access rights and the operating mode, edit them.

④ Controller parameters

The controller parameters can be edited if you are at password level "Advanced Customer" or above. The following settings are displayed:

Abbreviation	Description	Unit
kp	Proportional component of controller	[1]
ki	Integral component of controller	[ms]
kd	Differential component of controller	[ms]
Y-max	Maximum actuating variable	[%]
Y-min	Minimum actuating variable	[%]
W-max	Maximum setpoint value	[free]
W-min	Minimum setpoint value	[free]

⑤ Online trends

The following controlled variables are displayed as a trend:

Abbreviation	Description	Line colour	Unit
W/SP	Setpoint value	blue	[free]
x-PV	actual value	brown	[free]
Y/OP	Actuating variable	Orange	[%]

7.8.3 Plant Controller Autotuning (P_71.3)

The Autotuning screen appears when you press the main **CTR** screen selection key, select a plant controller and then press **TAB** twice. Information on the initialisation and use of autotuning for the selected plant controller is summarised on this screen.

Only customers who have received training are permitted to set the controllers. Please obtain information on GE Jenbacher's extensive range of training courses.

Note: This screen is only displayed optionally and in Expert View.

GE Proprietary Information: CONFIDENTIAL! Use or disclosure of data contained on this sheet is subject to the restrictions on the cover or on the first page.

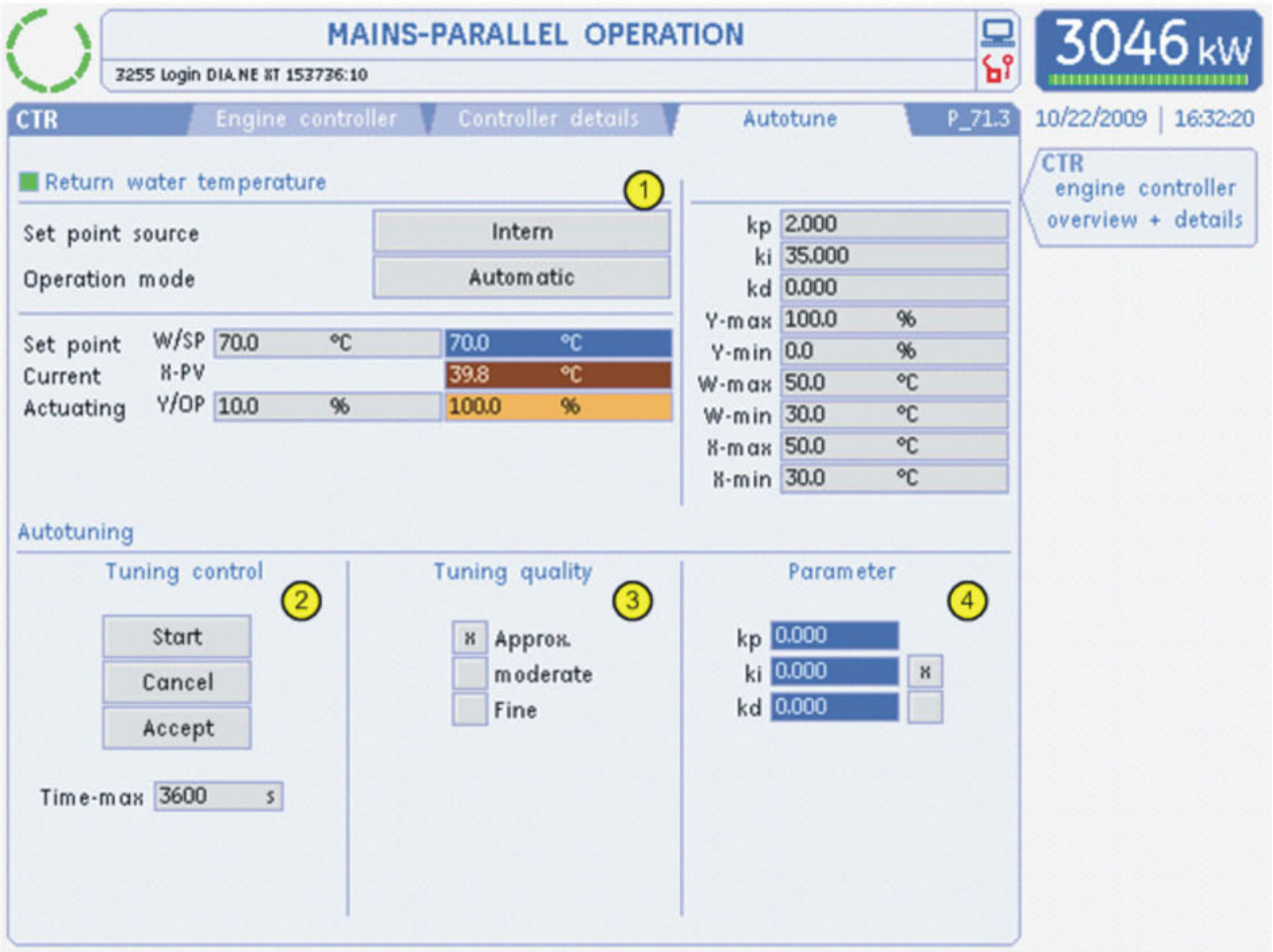

Note: Details on the autotuning controller can be found in TI 1000-0531.

The controller status is displayed in plain text and in the relevant language. The following text can be displayed:

- Autotuning active
- Autotuning parameters calculated
- Invalid value for P component
- Invalid value for I component
- Invalid value for D component
- Y-MAX is less than or equal to Y-MIN
- Error in calculation of controller parameters
- Maximum tuning time has been exceeded
- Invalid value for change to control variable dy-MAX
- Controlled variable X has left the permissible range
- Difference between W and X is too small to start the tuning process

GE Proprietary Information: CONFIDENTIAL! Use or disclosure of data contained on this sheet is subject to the restrictions on the cover or on the first page.

- Error in calculating the increase in the controlled variable
- Y-MAX or Y-MIN was changed during the tuning process

① **Control variables and controller parameters**

An explanation of the individual values can be seen in the Plant Controller Details (P_71.2) screen.

② **Tuning control**

Press the **Start** button to start the tuning process.

Press the **Cancel** button to cancel the tuning process and discard the parameters calculated.

Use **Accept** to copy the parameters calculated.

Enter the time limit for tuning in the **Time-max** box. If this value is exceeded, the tuning process is aborted and a note to that effect appears on the status display.

③ **Tuning quality**

Three modes are available:

approx.:	1 vibration test over 3 periods
moderate :	2 vibration tests over 4 periods (this is often the best choice)
fine :	3 vibration tests over 5 periods

④ **Autotuning parameters**

Calculated parameters:

Displayed here are the parameters which are used during or after the tuning process for

the controller.

kp : Display showing the calculated proportional component.

ki : Display showing the calculated integral component.

kd : Display showing the calculated differential component.

Press the **Accept** button to copy these parameters for the control system.

Selecting the controller type:

The cross in the check box ☒ next to the **ki** or **kd** parameter indicates whether it is advisable to search for control parameters for the selected controller component during the autotuning process.

If you do not want to carry out the calculation for a component, you can uncheck the appropriate check box ☐.

7.9 Customer Screens (CUSTOM)

The **CUSTOM** screen group contains information ordered by the customer as a special requirement.

Up to 21 subscreens can be inserted in this menu.

Note: This screen is only displayed as an option.

GE Proprietary Information: CONFIDENTIAL! Use or disclosure of data contained on this sheet is subject to the restrictions on the cover or on the first page.

7.9.1 Customer Screen (P_81.1)

The Cylinder Measured Values screen appears when you press the main **CUSTOM** screen selection key. The screen content may vary from application to application.

Note: This screen is only displayed as an option.

① **Customer screen**

This area can contain a customised screen.

7.10 System Information (SYS)

The **SYS** screen group contains information on the DIA.NE XT3 system and SAFI hardware.

Note: Only the System Overview (P_91.1) screen is displayed in Customer View.

7.10.1 System Overview (P_91.1)

The System Overview screen appears when you press the main **SYS** screen selection key. The most important information on the DIA.NE XT3 system as well as the lamp test and timing adjustment are visualised on this screen.

GE Proprietary Information: CONFIDENTIAL! Use or disclosure of data contained on this sheet is subject to the restrictions on the cover or on the first page.

① **Plant identification screen**

Engine type: The engine type or plant component type is displayed providing information on engine type and number of cylinders or the plant component type.

The **Application** box contains the text that identifies the plant.

The engine number that appears on the type plate is shown at **Engine number**. This ensures that the engine is clearly identified.

These details are used by GE Jenbacher for the administration of individual engine types, plants or individual machines.

② **Service active/inactive**

In order to calculate availability, any servicing activities can be registered here. The button must be pressed as soon as the servicing starts. The button text now switches to "Active". The button must be pressed again when the servicing is finished. No more time is registered to Service and "Inactive" is displayed.

Should the mechanic forget to press the button when the servicing is finished, the switch from active to inactive happens automatically following two hours of engine operation with a closed generator switch.

③ **Activation of lamp test**

GE Proprietary Information: CONFIDENTIAL! Use or disclosure of data contained on this sheet is subject to the restrictions on the cover or on the first page.

When you press the Start button all the indicators are switched on for 15 seconds.

④ **Time and date**

Adjusts time and date display to DIA.NE XT and DIA.NE WIN. This function is only enabled for user level customer (10) and above.

In the case of multi-engine plants equipped with DIA.NE WIN, system times are synchronised automatically.

If a DIA.NE WIN Server is installed, date or time setting (in hours) can only be done through DIA.NE WIN. In this case, the DIA.NE XT engine control system can only be used to adjust the time range in minutes or seconds.

Press the (**Set**) button to clear or copy the entry.

⑤ **Software versions**

The software version of the visualisation unit (**VIS**), the engine controller (**RPS**), the module control system (**SPS**), and all CAN bus participants connected to the engine are displayed here.

7.10.2 SAFI Hardware Details 1 (P_92.1)

The SAFI Hardware Details 1 screen appears when you press the main **SYS** screen selection key, followed by **F2**. The most important information on the SAFI system is displayed on this screen.

Note: This screen is only displayed as an option.

GE Proprietary Information: CONFIDENTIAL! Use or disclosure of data contained on this sheet is subject to the restrictions on the cover or on the first page.

Cyl #	Hardware Version	Firmware Version	Operation-Hours	Serial-Number	Produced tt/mm/jjjj
01-02	9,096	7.09	5561.2	2707239	10/07/2007
03-04	9,096	7.09	3056.2	2707242	10/07/2007
05-06	9,096	7.09	5543.2	2707241	10/07/2007
07-08	9,096	7.09	5419.1	2707243	10/07/2007
09-10	9,096	7.09	5561.0	2707244	11/07/2007
11-12	9,096	7.09	5558.5	2707245	11/07/2007
13-14	9,096	7.09	5561.2	2707239	10/07/2007
15-16	9,096	7.09	3056.2	2707242	10/07/2007
17-18	9,096	7.09	5543.2	2707241	10/07/2007
19-20	9,096	7.09	5419.1	2707243	10/07/2007
21-22	9,096	7.09	5561.0	2707244	11/07/2007
23-24	9,096	7.09	5558.5	2707245	11/07/2007

①

The hardware version for each device = cylinder pair is displayed.

② **Firmware version**

The firmware version for each device = cylinder pair is displayed.

③ **Operating hours**

The current operating hours for each device = cylinder pair is displayed.

④ **Serial number**

The serial number of the SAFI for each device = cylinder pair is displayed.

⑤

The production date for each device = cylinder pair is displayed.

GE Proprietary Information: CONFIDENTIAL! Use or disclosure of data contained on this sheet is subject to the restrictions on the cover or on the first page.

7.10.3 SAFI Hardware Details 2 (P_92.2)

The SAFI Hardware Details 2 screen appears when you press the main **SYS** screen selection key, then **F2** followed by **TAB**. Further information on the SAFI system is displayed on this screen.

Note: This screen is only displayed as an option.

①

The electronics temperature for each device = cylinder pair is displayed.

② **Tooth error**

The tooth error shows any tooth on the flywheel ring gear on which a pickup error has been detected.

③ **Filter version**

The serial number of the knock filter for each device = cylinder pair is displayed.

7.11 Parameter Manager (PARA)

The parameter manager for the DIA.NE XT3 system is implemented in the **PARA** screen group. All the parameters available for the relevant engine and authorisation level are displayed, and can be edited.

GE Proprietary Information: CONFIDENTIAL! Use or disclosure of data contained on this sheet is subject to the restrictions on the cover or on the first page.

7.11.1 Parameter Manager (P_Para1.1)

The Parameter Manager screen appears when you press the main **PARA** screen selection key. The parameter lists available for the engine or for the current authorisation level are displayed on this screen. You can select the list you want from this screen.

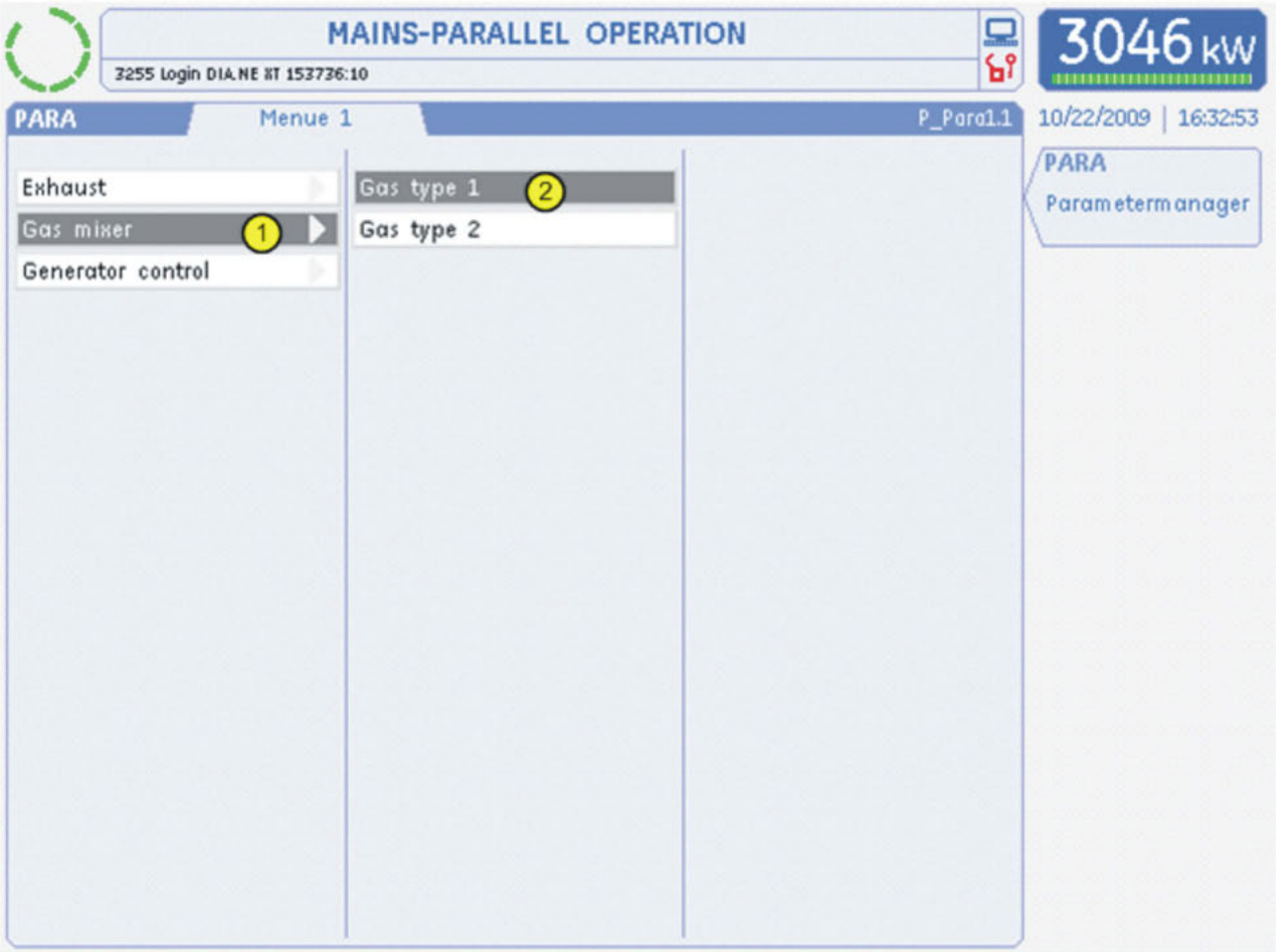

① List navigation

All the parameter lists which can be viewed by the relevant authorisation level are shown. Where a list entry (e.g. **Gas mixer**) has multiple subentries available (e.g. **Gas type 1** and **Gas type 2**), these lists are displayed in a second column. Where further subentries are available, they can be displayed in a third column. An arrow symbol to the right of the selection field indicates that an entry has more subentries. Use the cursor keys to navigate between the individual fields. Press the cursor key on the right to switch to a submenu.

If there is insufficient space available for the number of lists, other entries are displayed on other tabs. To switch between tabs, press the **TAB** key.

② List selection

Once you have navigated to the list you want, press the Enter key to display the list.

GE Proprietary Information: CONFIDENTIAL! Use or disclosure of data contained on this sheet is subject to the restrictions on the cover or on the first page.

7.11.2 Parameter Manager (P_Para2.1)

The Parameter Manager screen appears when you press the main **PARA** screen selection key and then select a parameter list. The parameters from the selected list or the parameters available for the current authorisation level are displayed on this screen.

If there is insufficient space available for the number of parameters, other entries are displayed on other tabs. To switch between tabs, press the **TAB** key.

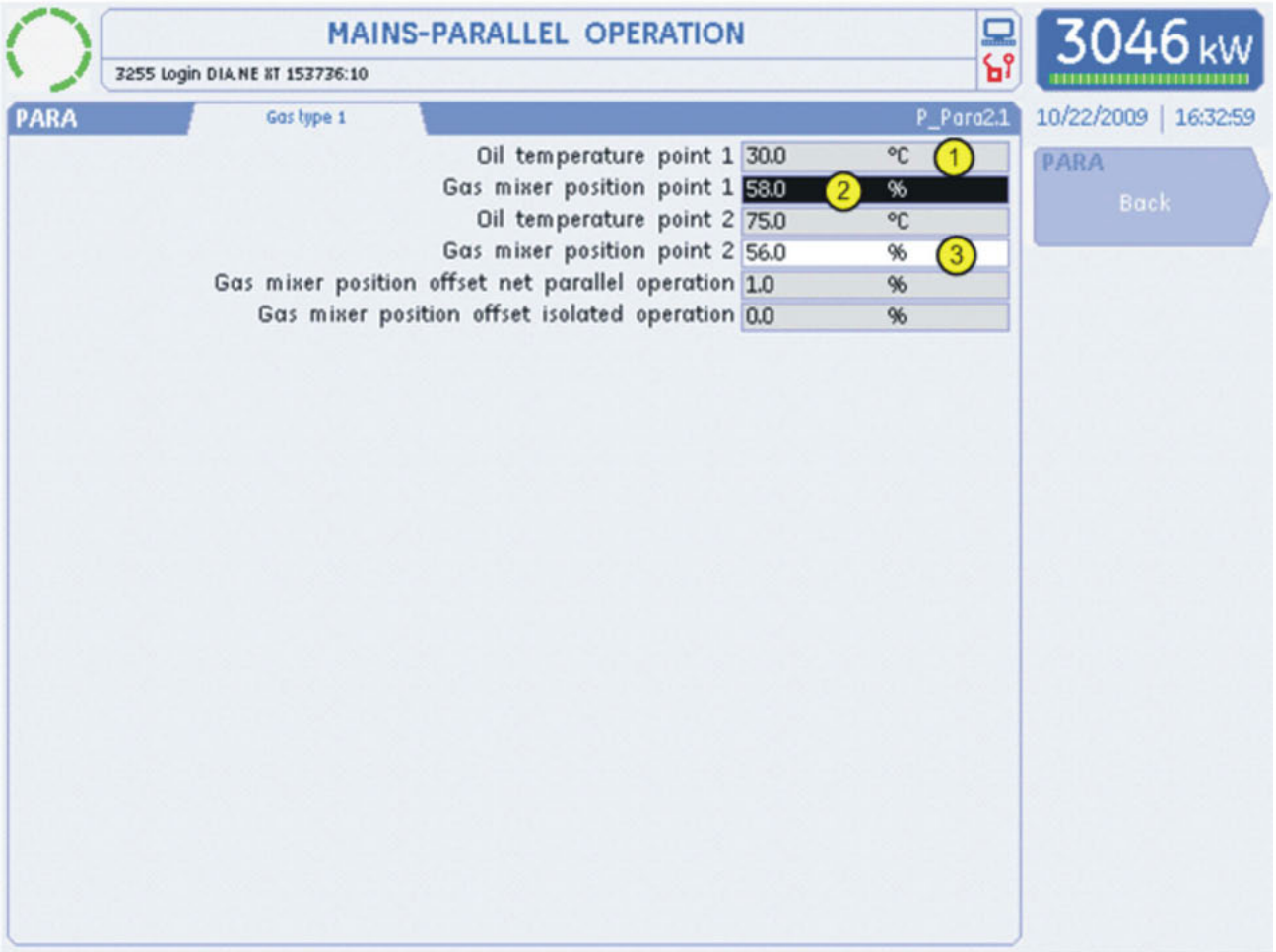

① Parameter not editable

Some parameters are displayed for information purposes only. They cannot be edited at the current password level. The grey background indicates that a value is not editable.

② Parameter selected

The selected parameter is displayed against a black background.

③ Parameter selectable

All selectable parameters are displayed against a white background. Use the cursor keys to navigate up and down between the individual fields.

GE Proprietary Information: CONFIDENTIAL! Use or disclosure of data contained on this sheet is subject to the restrictions on the cover or on the first page.

7.12 User Management (USER)

The **USER** screen group contains the user settings for the DIA.NE XT3 system.

7.12.1 User Settings (P_U_1.1)

The User Settings screen appears when you press the main **USER** screen selection key. The user settings available for the DIA.NE XT3 system are displayed on this screen.

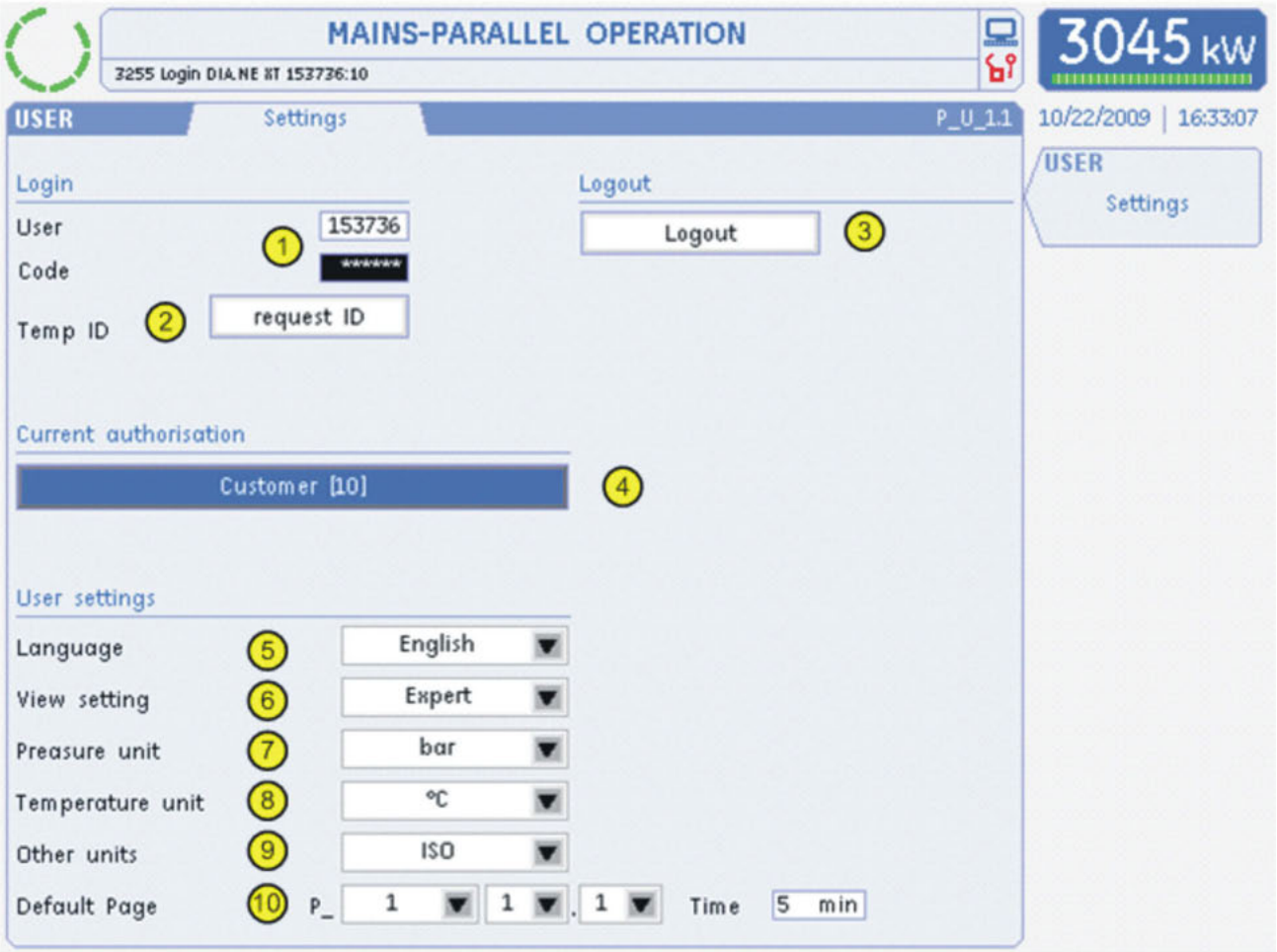

① **Logging on as a user**

By entering a number as a user ID (**User**) and a personal code number (**Code**), users log on to the DIA.NE XT3 system with an individually allocated password level.

② **Temporary ID**

To obtain a higher password level for a short period, you can use this random number to generate a code number (**Temp ID**).

The temporary identification process is initiated by the Jenbacher Service Team (www.gejenbacher.com).

③ **Logout**

GE Proprietary Information: CONFIDENTIAL! Use or disclosure of data contained on this sheet is subject to the restrictions on the cover or on the first page.

When you press the **Logout** key, you lose your access rights until you log on to the system again.

④ Display showing authorisation level

The **Current authorisation** level is shown here.

⑤ Switching language

You can select the language you require from the drop down menu. Customised documents are published in the customer's language and in English.

⑥ Switching between Expert and Customer View

The number of measuring points is of no interest to many users. For these users a special view has been created which has a reduced number of screens and a reduced information content and which provides for a better understanding of the screens by using symbols (e.g. traffic lights) and keys.

⑦ Switching pressure unit

Here you can switch the pressure indications between bar, psi and kPa.

⑧ Switching temperature unit

Here you can switch the temperature indications between degrees Celsius, degrees Fahrenheit and Kelvin.

⑨ Switching between ISO and US units

You can use this drop down list to switch between other units that are different in the ISO and US systems.

⑩ Default page preselection

You have the option of switching to a variable page after a variable time.

The page is identified by the page ID which you can see in the top right-hand corner of the screen content (e.g. P_11.1 for the Electrical Overview).

The desired page and the time since the last key was pressed can be entered here.

7.13 Alarm Management (ALARM)

The **ALARM** screen group contains details of the current and historical message records including values measured when a failure occurred.

7.13.1 Current Messages (P_A1.1)

The Current Messages screen appears when you press the main **ALARM** screen selection key. Impending alarms, warnings and operating notifications are displayed on this screen in chronological order.

Note: Press the increment/decrement keys to scroll between the most recent and older messages.

GE Proprietary Information: CONFIDENTIAL! Use or disclosure of data contained on this sheet is subject to the restrictions on the cover or on the first page.

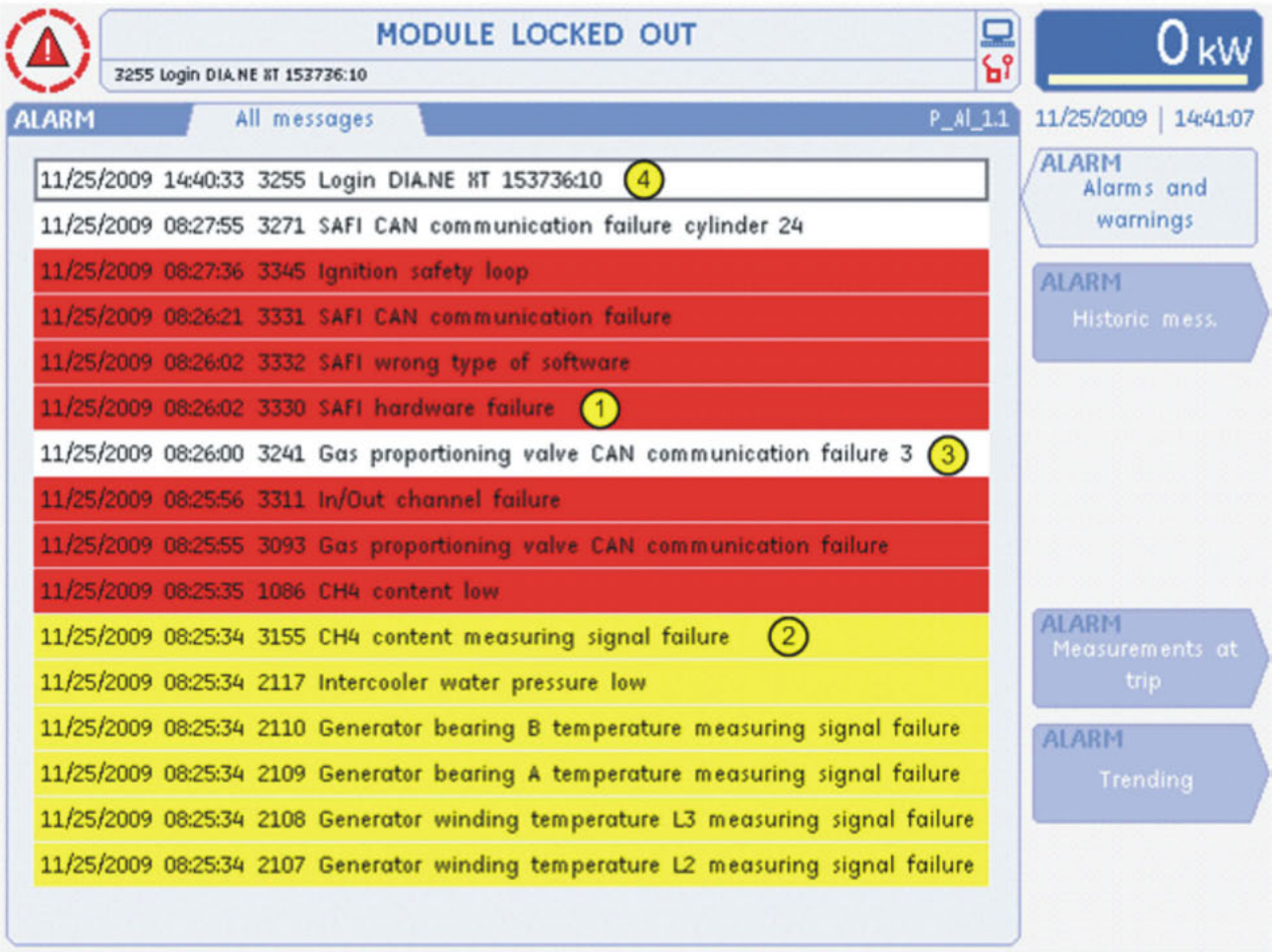

① **Alarm**

Alarms are messages that result in engine shutdown. They are identified by their red background.

② **Warning**

Warnings are messages that do not result in engine shutdown. They are intended to inform the operator about an imminent problem which could cause a shutdown or engine damage at a later stage. Warnings are identified by their yellow background.

③ **Operating notification**

Operating notifications are purely information messages which should be shown to the user or logged. They are identified by their white background.

④ **Alarm cursor**

A cursor is displayed to assist you while scrolling and to select a message help option. Press the increment/decrement keys to move the cursor up and down.

GE Proprietary Information: CONFIDENTIAL! Use or disclosure of data contained on this sheet is subject to the restrictions on the cover or on the first page.

7.13.2 Historical Messages (P_AI_2.1)

The Historical Messages screen appears when you press the main **ALARM** screen selection key, followed by **F2**. Historical alarms, warnings and operating notifications are displayed on this screen in chronological order.

Note: Press the increment/decrement keys to scroll between the most recent and older messages. The last 1,000 entries are saved.

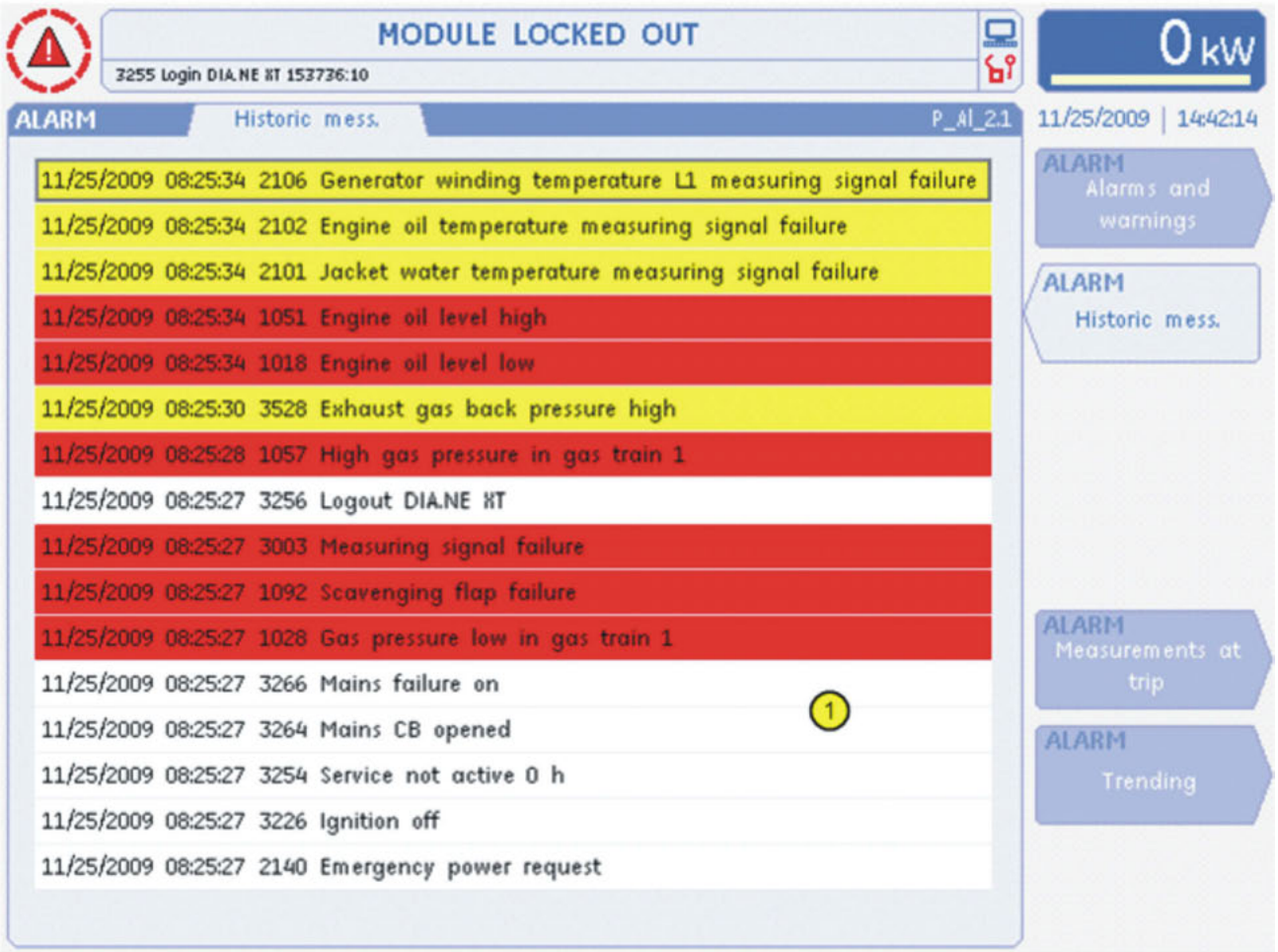

① Historical messages

The last 1,000 entries are displayed in chronological order.

7.13.3 Measurements at Failure (P_AI_5.1)

The Measurements at Failure screen appears when you press the main **ALARM** screen selection key, followed by **F5**. Selected values measured when the last failure occurred are displayed on this screen and online.

GE Proprietary Information: CONFIDENTIAL! Use or disclosure of data contained on this sheet is subject to the restrictions on the cover or on the first page.

① Cylinder exhaust gas temperatures at failure

The cylinder exhaust gas temperatures with a red background were saved at the time of failure. They are displayed in degrees Celsius, degrees Fahrenheit or in Kelvin.

② Current cylinder exhaust gas temperatures

The current exhaust gas temperatures with a blue background can be displayed in degrees Celsius, degrees Fahrenheit or in Kelvin.

③ Display showing values measured at the time of failure

Depending on the engine configuration, selected values measured at the time of failure are saved and displayed here.

④ Display showing current measured values

The current values are displayed here for comparison with the display showing the values measured at the time of failure.

GE Proprietary Information: CONFIDENTIAL! Use or disclosure of data contained on this sheet is subject to the restrictions on the cover or on the first page.

7.13.4 Trending at Failure (P_Al_5.1)

The Trending at Failure screen appears when you press the main **ALARM** screen selection key, followed by **F6**. Selected values measured when the last failure occurred are displayed on this screen in a trend analysis.

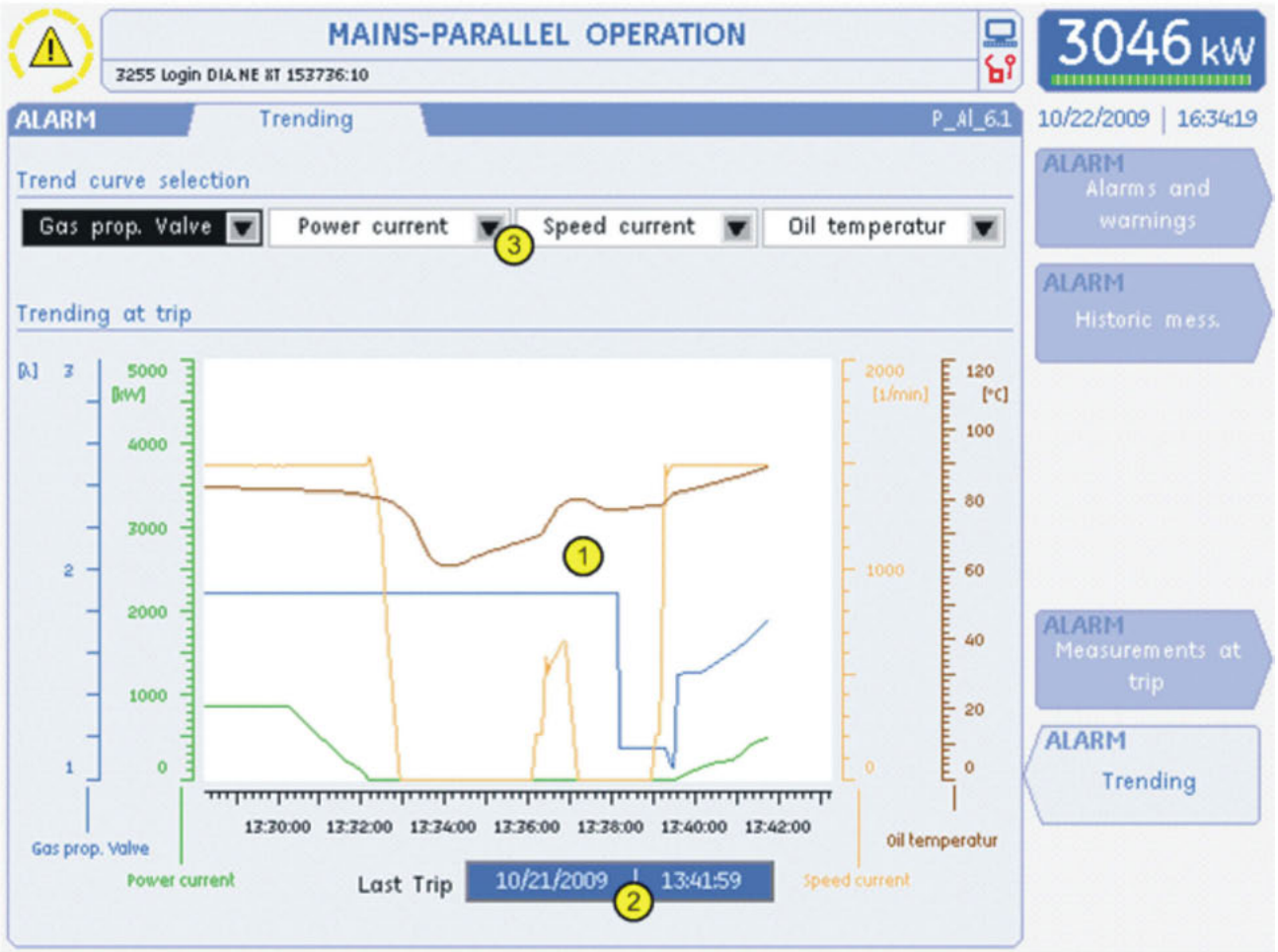

① Trend display

The following measured values can be displayed as an option:

- Gas mixer position / Cooling water pressure / Cylinder temperature / Cooling water temperature
- Current power / Throttle valve position / Turbocharger bypass valve position / Boost pressure
- Current engine speed / Mixture temperature / Operating hours / Oil pressure
- Oil temperature / Return temperature / Ignition point

Two-thirds of the values measured before the failure occurred are displayed and one third after it occurred.

② Time stamp

The time at which the shutdown occurred is displayed in order to improve synchronisation with the alarm entries.

③ Line selection

GE Proprietary Information: CONFIDENTIAL! Use or disclosure of data contained on this sheet is subject to the restrictions on the cover or on the first page.

You can make a selection from the lines listed at ①. Four lines can always be viewed simultaneously.

7.14 Help System (HELP)

Help texts are provided for many alarm entries in the **HELP** system.

7.14.1 Help for Alarm Management Entry (A_Help_XXX)

The Help screen appears when an alarm management message has been selected for which a help text is available in the relevant language. The LED on the Help key indicates whether a text is available.

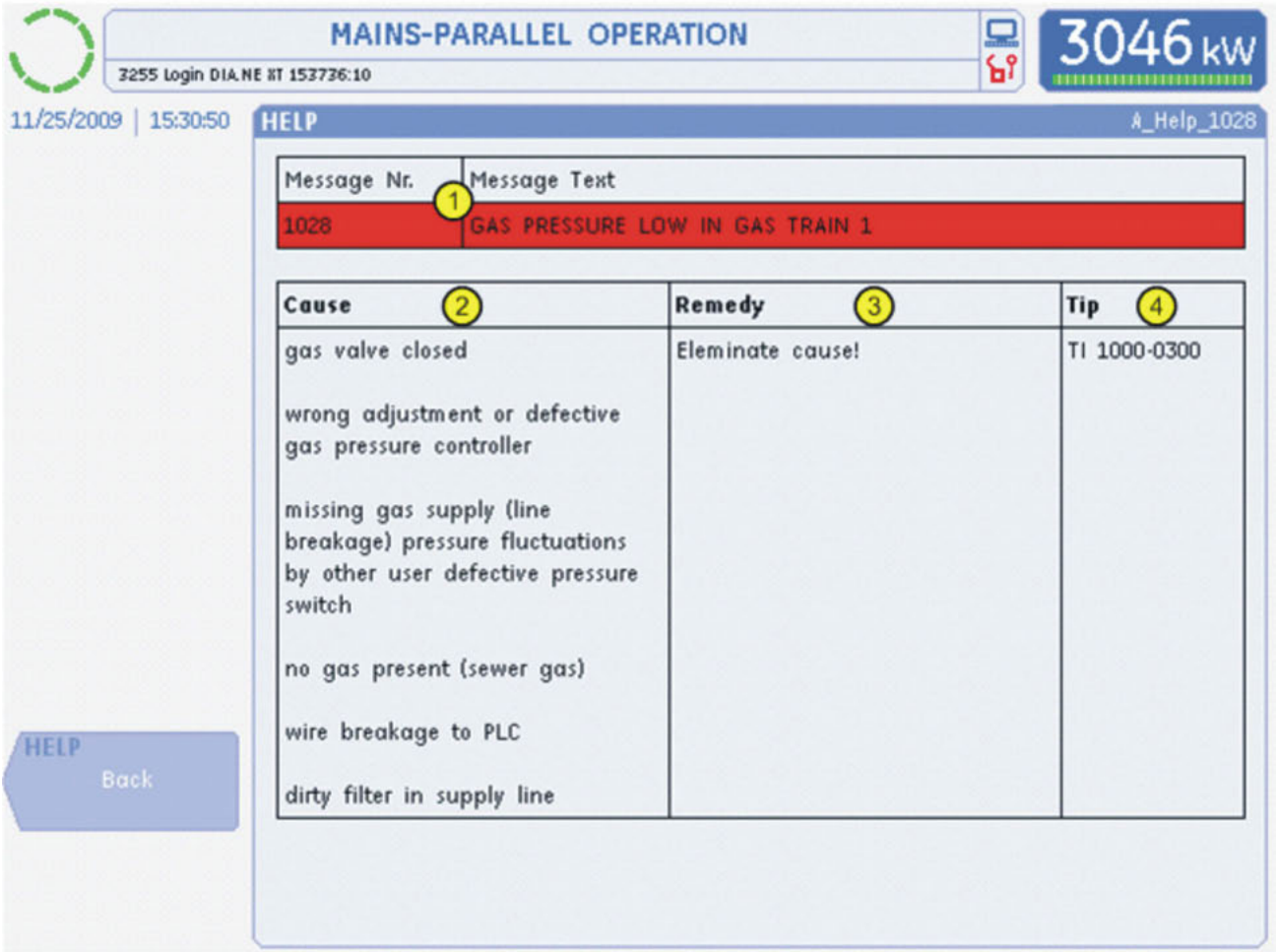

① Message text

The message number and text generated by the alarm management system is displayed here.

② Causes

The well known causes that trigger this message are listed in plain text.

③ Corrective measures

Brief instructions for rectifying the problem are entered here.

GE Proprietary Information: CONFIDENTIAL! Use or disclosure of data contained on this sheet is subject to the restrictions on the cover or on the first page.

④ **Tip**

Additional useful information is displayed in the Tip column.

GE Proprietary Information: CONFIDENTIAL! Use or disclosure of data contained on this sheet is subject to the restrictions on the cover or on the first page.

1 General ... 3
1.1 Components ... 3
2 Applications ... 5
2.1 Remote control (operating and monitoring) with DIA.NE WIN ... 5
2.2 Automatic data and message transmission through DIA.NE remote message control ... 5
2.3 DIA.NE control ... 6
2.3.1 Receiving messages and data 6
2.3.2 Notifying participants 7
2.3.3 Main screen 8
2.3.4 File menu 8
2.3.4.1 Caller 8
2.3.4.2 Messages to be transmitted 9
2.3.4.3 Export data 9
2.3.4.4 Message log book 10
2.3.4.5 Configuration 10
2.3.4.5.1 RDT control centre 10
2.3.4.5.2 Standard messages 11
2.3.4.5.3 Customer specific Messages 11
2.3.4.5.4 Notification 12
2.3.4.5.5 SMS format 14
2.3.4.6 Password protection 14
2.3.5 Help menu 15
2.3.5.1 Help 15
2.3.5.2 About DIA.NE control 15
2.4 DIA.NE report ... 15
2.4.1 Using the multi-user environment 15
2.4.2 Main screen 15
2.4.3 File menu 17
2.4.3.1 Refresh display 17
2.4.3.2 Print 17
2.4.3.3 Caller 18
2.4.3.4 Configuration 19
2.4.3.4.1 General 19
2.4.3.4.2 Display 19
2.4.3.5 Help menu 20
2.4.3.6 Help 20
2.4.3.7 About DIA.NE report 20
2.5 DIA.NE message ... 20
2.5.1 Transmission of messages 20
2.5.2 Failed connection to modules 21
2.5.3 File transmission 21
2.5.4 Main screen 21
2.5.5 File menu 22
2.5.5.1 Database matching with RDT control centre 22
2.5.5.2 Message log book 22
2.5.5.3 Configuration 22
2.5.5.4 Plant data 22

GE Proprietary Information: CONFIDENTIAL! Use or disclosure of data contained on this sheet is subject to the restrictions on the cover or on the first page.

2.5.5.5 Modules 23
2.5.5.6 RDT control centres 24
2.5.5.7 Transmitted message 25
2.5.5.8 Data matching 26
2.5.5.9 Messages registered 27
2.5.5.9.1 Password protection 27
2.5.6 Help menu 28
2.5.6.1 Help 28
2.5.6.2 About DIA.NE message 28
2.6 Installation instructions – configuration instructions 28
2.6.1 Configuring an RDT network connection between a DIA.NE WIN client and server (modem option only) 28
2.6.2 Configuring a network connection between a DIA.NE WIN client and server (LAN option only) 29
2.6.3 Configuring an Internet connection between a DIA.NE WIN client and server (Internet option only) 30
2.6.4 Configuring the DIA.NE WIN server 30
2.6.4.1 Remote maintenance of the DIA.NE WIN server 30
2.6.4.2 Configuring DIA.NE message 30
2.6.4.3 Configuring the RDT network (modem option only) 31
2.6.4.4 Configuring the network connection for the RDT control centre (LAN option only) 31
2.6.5 Installing/configuring the RDT control centre 32
2.6.5.1 Installing the DIA.NE control and DIA.NE report software 33
2.6.5.2 Configuring DIA.NE control 33
2.6.5.3 Configuring DIA.NE report 33
2.6.5.4 Creating the dial-up user 34
2.6.5.5 Configuring the Remote Access Service (RAS) (modem option only) 35
2.6.5.6 Enabling the drive 37
2.6.5.7 Automatic start-up of DIA.NE control 38
2.6.5.8 Automatic login to the RDT control centre when re-booting 38
2.6.5.9 Configuring the Windows Firewall (only Windows XP Service Pack 2 and higher) 39
3 Connections 41
3.1 Modem 41
3.2 Network (LAN) 41
3.3 Internet 41
3.3.1 Components 42
3.3.2 General conditions 42
3.3.3 Preparation 43
3.3.3.1 Installing the Windows Update Pack (only Windows XP Service Pack 2 and higher) 43
3.3.3.2 Configuring the Microsoft Internet Explorer security settings 43
3.3.4 Accessing the Jenbacher Remote Access Portal 44
3.3.5 Access to DIA.NE XT/WIN installations 47
3.3.5.1 Starting the DIA.NE WIN application 48
3.3.5.2 Downloading files from the DIA.NE WIN server 48
3.3.5.3 Starting Port Forwarding for remote maintenance of the DIA.NE WIN server using VNC software 48
3.3.6 Accessing DIA.NE installations 50

GE Proprietary Information: CONFIDENTIAL! Use or disclosure of data contained on this sheet is subject to the restrictions on the cover or on the first page.

3.3.6.1	Starting Port Forwarding for remote maintenance of the modem server using "Symantec pcANYWHERE" software	50
3.3.7	Troubleshooting, Tips & Tricks	52
3.3.7.1	Help system	52
3.3.7.2	Error when activating the Nokia Application Forwarding component	52
3.3.7.3	Error messages when activating the DIA.NE WIN application	53
3.3.7.4	VNC error message "unable to resolve host by name: ...“	53
3.3.7.5	Setting the user-specific default language	54
3.3.8	Additional information	55
3.3.8.1	Information on the Remote Access Portal used	55
3.3.8.2	Information on the installation firewall used	55

1 General

HERMES is the Remote Data Transmission program for DIA.NE XT / WIN. It provides both customers and GE Jenbacher service engineers with a powerful tool for the remote control and maintenance of GE Jenbacher engines and plants. When developing the program, the main design prerequisite was that HERMES should comply with all functionalities of DIA.NE XT / WIN, the leading engine management system on the gas engine market. Thanks to **HERMES** all on-site functionalities can now also be accessed through remote control. Apart from that, **DIA.NE remote message control (RMC)** enables the automated transmission of messages and data to RDT (Remote Data Transmission) control centres. The concept ensures that the hierarchical information compression approach upon which DIA.NE XT / WIN is based will be consistently followed in accordance with the "automation pyramid".

HERMES therefore consists of:

2 applications

- DIA.NE WIN
- DIA.NE RMC (remote message control)

3 connection options

- Modem (analogue, ISDN, GSM)
- Network (LAN)
- Internet

which can be supplied in any combination customers may require.

However, at least 1 connection option and 1 application must be ordered.

1.1 Components

Each engine (module) is provided with a powerful control and visualisation unit (DIA.NE XT), which is responsible for the direct control of the engine. All modules are linked through a network connection using 100BaseT Ethernet. Up to 16 modules (+A1 through +A16) can be linked to a DIA.NE WIN server (+Z1) via this network.
Any number of clients (DIA.NE WIN client, RDT control centre – but only up to a maximum of 5 clients at the same time) can communicate with this computer, which is usually not equipped with a display, via various connections. If required, a station control unit for the entire plant can be integrated into the network.

The following Figure shows the configuration.

GE Proprietary Information: CONFIDENTIAL! Use or disclosure of data contained on this sheet is subject to the restrictions on the cover or on the first page.

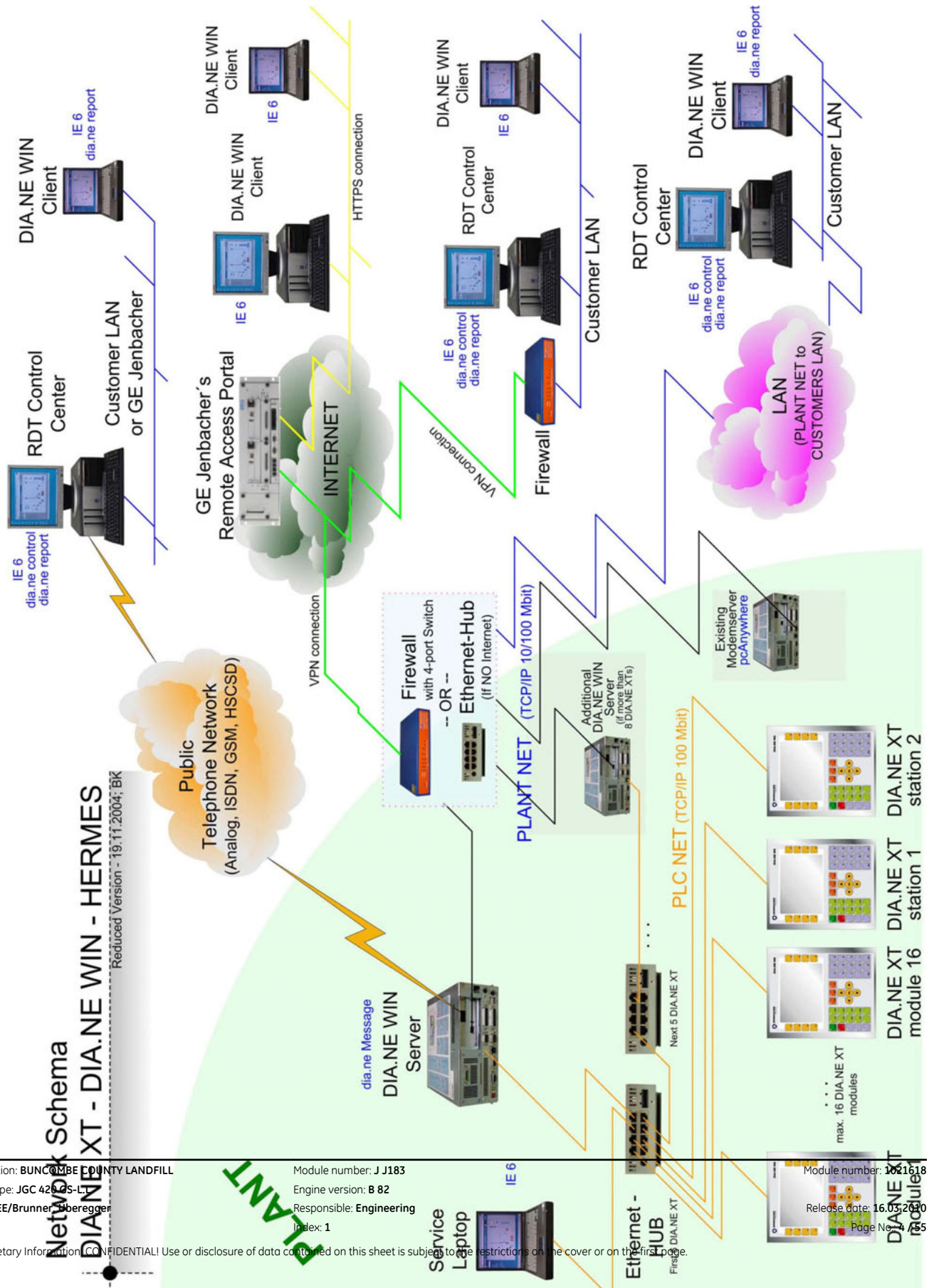

GE Proprietary Information: CONFIDENTIAL! Use or disclosure of data contained on this sheet is subject to the restrictions on the cover or on the first page.

2 Applications

2.1 Remote control (operating and monitoring) with DIA.NE WIN

The plant is remotely operated using a web-based application (DIA.NE WIN).

A separate set of online documentation has been written for DIA.NE WIN, describing both the operation and the installation of the DIA.NE WIN client.

The configuration of the network connection between the DIA.NE WIN client and the DIA.NE WIN server via the various connection options (modem, LAN, Internet) is described in the section entitled **Installation instructions – Configuration instructions**.

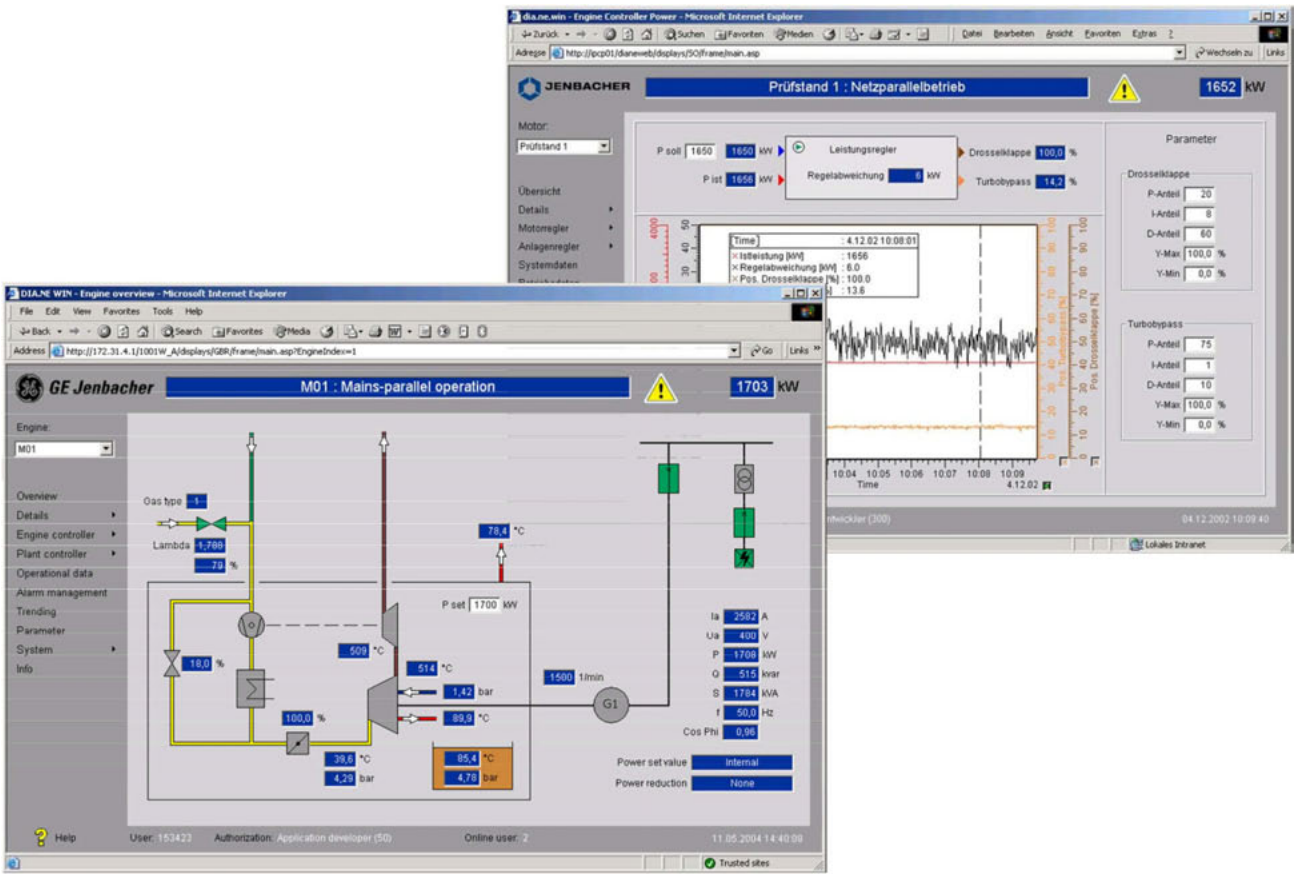

2.2 Automatic data and message transmission through DIA.NE remote message control

The **DIA.NE RMC** software package contains an automated facility for transmitting data and messages from DIA.NE WIN servers to RDT control centres and forwards them by fax, e-mail and SMS (via an e-mail SMS gateway). The messages and data stored in an RDT control centre can be randomly accessed for processing by any workstation connected to this unit via a LAN.

In line with the tasks described above, the DIA.NE RMC software package is divided into the following three programs:

GE Proprietary Information: CONFIDENTIAL! Use or disclosure of data contained on this sheet is subject to the restrictions on the cover or on the first page.

DIA.NE message

Once classified, the data on the individual modules generated in DIA.NE XT are transmitted to one or more RDT control centres.

DIA.NE control

In the RDT control centre, all incoming messages are monitored and, following classification, they are forwarded to an external communication participant.

DIA.NE report

The received data can also be accessed (View, Print) by all users via a network (LAN) connected to the RDT control centre.

In an RDT control centre, PCs equipped with modem/LAN/Internet-as a standard are used to connect to any of the **DIA.NE WIN** servers. The service engineers also have the option of forwarding the data and messages to certain fax numbers and/or, using Internet access, to certain e-mail addresses. Messages can also be forwarded to mobile phones and pagers via an e-mail SMS gateway.

2.3 DIA.NE control

In the RDT control centres, DIA.NE control takes care of receiving and archiving all incoming messages and data. DIA.NE control also forwards messages and reports via fax and e-mail (incl. SMS for mobile phones and pagers) to notify service staff.

The allocation of DIA.NE WIN servers to the RDT control centres is not pre-configured. In principle, any DIA.NE WIN server can send messages and data to any RDT control centre.

2.3.1 Receiving messages and data

DIA.NE message places a call to the RDT control centre through an RAS connection object. Using Windows terminology, the RDT control centre represents a Remote Access Server (RAS server). This service is pre-installed in the Windows 2000 and Windows XP operating systems and only needs to be configured in accordance with the installation instructions.

This way, **DIA.NE message** enters the messages originally generated by DIA.NE XT into a message database on the RDT control centre. This database (MS Access) is used as a basis for data on the functions of the DIA.NE control and DIA.NE report programs.

In addition, DIA.NE control can also receive the trend and logbook files recorded on the DIA.NE WIN server.

GE Proprietary Information: CONFIDENTIAL! Use or disclosure of data contained on this sheet is subject to the restrictions on the cover or on the first page.

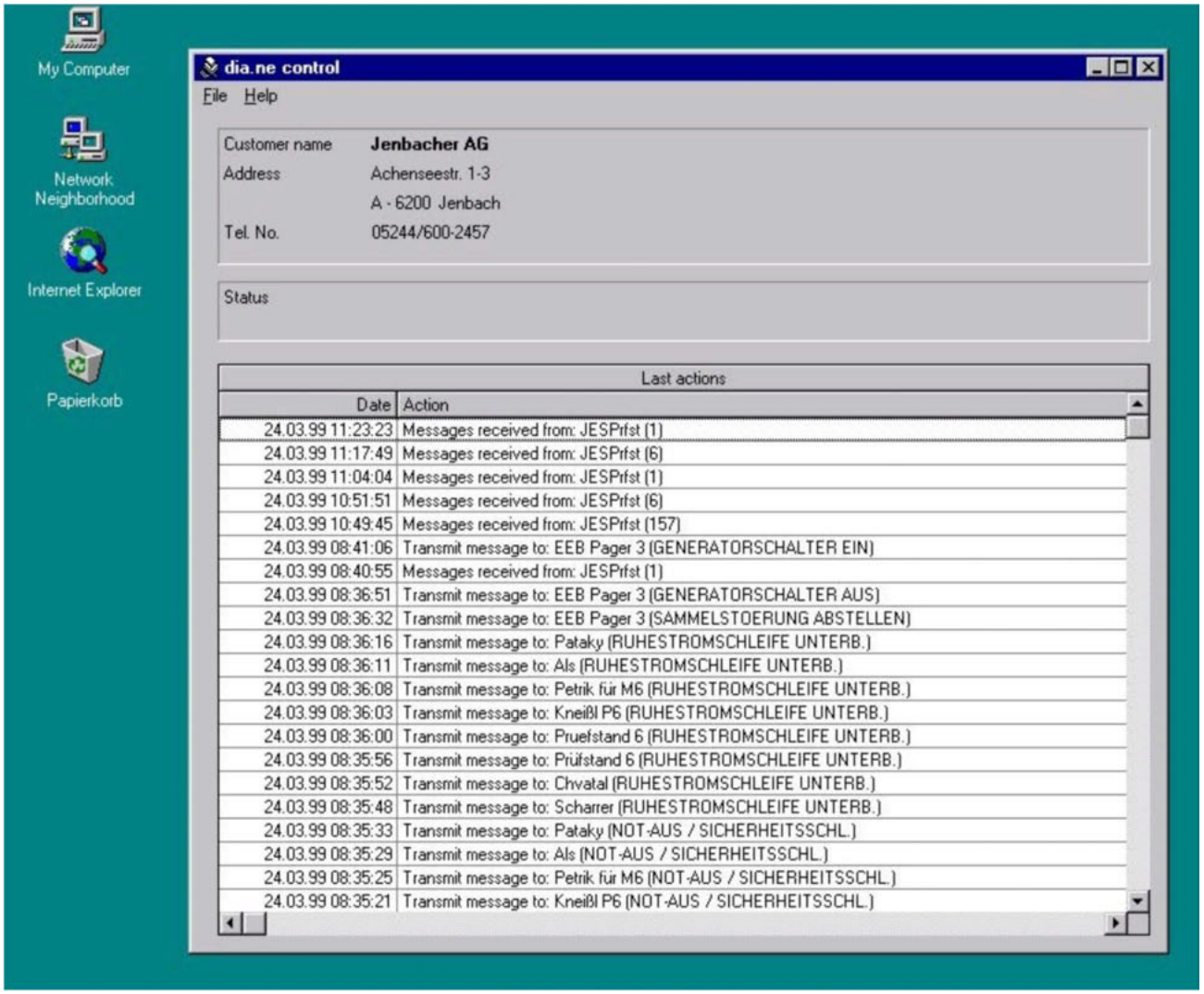

2.3.2 Notifying participants

In order to make notification as efficient as possible, the messages received from plants are checked on the basis of various criteria before they are forwarded. The following criteria can be set:

- Plant password
- system number
- Module
- Message description
- Message number
- Message type

GE Proprietary Information: CONFIDENTIAL! Use or disclosure of data contained on this sheet is subject to the restrictions on the cover or on the first page.

- Time at which the message is received
- Notification type (e-mail, SMS via e-mail, fax)

The messages are transmitted to the configured participant using the MAPI interface (Microsoft Message Application Program Interface). The communication types available can be configured in the Microsoft mail profile:

- *E-mail:*
  Connection to a mail server or dial-up line to Internet provider
- *Fax:*
  Use of a MAPI-enabled fax server or the Microsoft Fax Service.
- *Voice:*
  participants (and/or pagers) can be notified by selecting the fax function (without transmitting data)
- *Text:*
  Messages can be forwarded to pagers and mobile phones through the e-mail SMS gateway. Gateway services are provided by various mobile radio telephone suppliers or commercial service providers.

The messages are generated in two different types:

- *Short (for SMS):*
  variable amount of message information
- *Long (for e-mail and fax):*
  all message information

2.3.3 Main screen

Following the call by DIA.NE control, the main screen is displayed. It shows the configured customer data ("Customer name", "Address" and "Tel. No.") and the current status of the program. In this status field, all actions executed by the program at the time are shown, e.g. reading in transmitted messages, notifying participants etc.

Last actions

The *Last actions* table shows the activities of DIA.NE control.

The table items are always arranged in reverse chronological order. The most recent entries can be found at the top of the table. The table is automatically updated.

The *Main screen* contains two menu commands, *File* to access the other menus and *Help* to access the online help.

2.3.4 File menu

2.3.4.1 Caller

This table shows which DIA.NE WIN servers (DIA.NE message) have called this RDT control centre and displays the connection control status.

When a connection between a new DIA.NE WIN server and the RDT control centre is established for the first time, a new item is entered into this table containing the plant data.

GE Proprietary Information: CONFIDENTIAL! Use or disclosure of data contained on this sheet is subject to the restrictions on the cover or on the first page.

Plant

Name of the plant whose DIA.NE WIN server has called.

Plant No.

Plant number of the caller.

Location

Contents of the DIA.NE message address field.

Last call

Date and time of last call during which messages were saved.

Last message matching

Date and time of last call during which "Non-Critical Messages" were transmitted (because of manual or automatic database matching by DIA.NE message).

Last trend file matching

Date and time of last call during which trend files were transmitted.

Last report matching

Date and time of last call during which report files were transmitted.

Conn. Monitoring

If this check box is enabled, the entire line is displayed in red whenever connection monitoring is selected. This will typically be the case if more than 24 hours have passed between the current date and the “Last call” date.

In that case, the *Connection monitoring* function in DIA.NE message should be enabled for this RDT control centre (see DIA.NE message documentation).

2.3.4.2 Messages to be transmitted

This table contains all the messages which have not yet been used to notify participants.

In the table, certain messages can be excluded from notification by enabling the *Already transmitted* check box. The Delay check box enables temporary delay of notification for specific messages.

Delay notification of participants

Enabling this check box will delay all notification of participants.

2.3.4.3 Export data

DIA.NE control continuously receives messages from the DIA.NE WIN servers and stores these in the message database. This will increase the size of the database continuously, thus possibly adversely affecting the access

GE Proprietary Information: CONFIDENTIAL! Use or disclosure of data contained on this sheet is subject to the restrictions on the cover or on the first page.

speed in the longer term. If so desired, the user of the RDT control centre can store the increasing amount of data outside the current database.

To relocate the message data, the *Export data* dialogue box should be opened.

Database

Refers to current message database file.

Oldest entry

Date and time of oldest entry in this database.

Most recent entry

Date and time of most recent entry in this database.

Number of entries

The total number of entries in the message database.

The following three steps can be taken:

- *Export to database*: The messages are exported to another Microsoft Access database in accordance with the "Export from date" and "Export to date" specified. If the destination database is not yet available, it will be created after the user has been prompted (in conformity with file path and name in the text field concerned). If the database already exists, the messages to be exported will be added to it.
  Exporting the messages will not erase the contents of the message database!
- *Delete*: The messages will be permanently deleted from the message database (for example, following a prior export of data).
- *Compact Database*: Manually compresses the database.
  All database clients (e.g. DIA.NE report) must be closed first.

This action is executed after clicking the OK button and acknowledging the warning.

The Cancel button closes the whole dialogue box again.

2.3.4.4 Message log book

This menu command is used to view and delete the DIA.NE control log book.

This log book contains DIA.NE control system entries.

2.3.4.5 Configuration

The DIA.NE control configuration window contains the following tabs:

2.3.4.5.1 RDT control centre

The customer data ("Customer name", "Address", "Tel. No.") of the RDT control centre are entered in this tab.

GE Proprietary Information: CONFIDENTIAL! Use or disclosure of data contained on this sheet is subject to the restrictions on the cover or on the first page.

Message protocols

These settings enable automatic logging of all messages received in the last 24 hours. This will take place daily at the pre-set time (e.g. "16:00") on the pre-selected printer. The text in the *Free text for automatic protocols* field will be printed in the heading of the message protocol. The printout contains all message information. Printout format: A4, landscape.

Language (mandatory information!)

This field is used to select the language in which the message is to be printed (D, F, I, GB, etc.). This setting will not affect the communication language setting.

Post office profile (mandatory information!)

The profile name should be entered in this field of the Microsoft mail profile which is to be used for communication. The profile name can be found in the Mail entry in Control Panel.

TIP!

If Microsoft Outlook Express is used for sending messages (standard e-mail program), the entry in Post office profile is irrelevant.

2.3.4.5.2 Standard messages

This tab contains the DIA.NE XT / WIN standard messages.

The entries in the table can be modified.

The data in the table are setup and maintained by GE Jenbacher. In combination with the Customer-specific messages table, DIA.NE control adds a language-dependent text to the message numbers transmitted by the DIA.NE WIN server (DIA.NE message).

Msg. No.

Unique four-digit message number

Language

Language abbreviation (D, F, I, UK, etc.)

Msg. Type

Message type to which this message corresponds

Description

Text corresponding to this message number.

2.3.4.5.3 Customer specific Messages

The table contains customer-specific deviations from the standard message table. These deviations can arise if certain customers (plants, modules) have allocated an entirely different meaning to a certain message number than its

GE Proprietary Information: CONFIDENTIAL! Use or disclosure of data contained on this sheet is subject to the restrictions on the cover or on the first page.

standard meaning (typical cause of backup failures). In addition to the fields "Msg. No.", "Language", "Msg. Type" and "Description" as already contained in the Standard messages table, two additional fields are required for unique allocation to a module.

Plant

Number of the plant to which the exception applies.

modules

Number of the module to which the exception applies.

If the plant or module field is left blank, the exception applies to all plants and/or modules.

2.3.4.5.4 Notification

Using **DIA.NE** control it is possible to inform the participants of any messages received. The participants to be notified are configured in this tab.

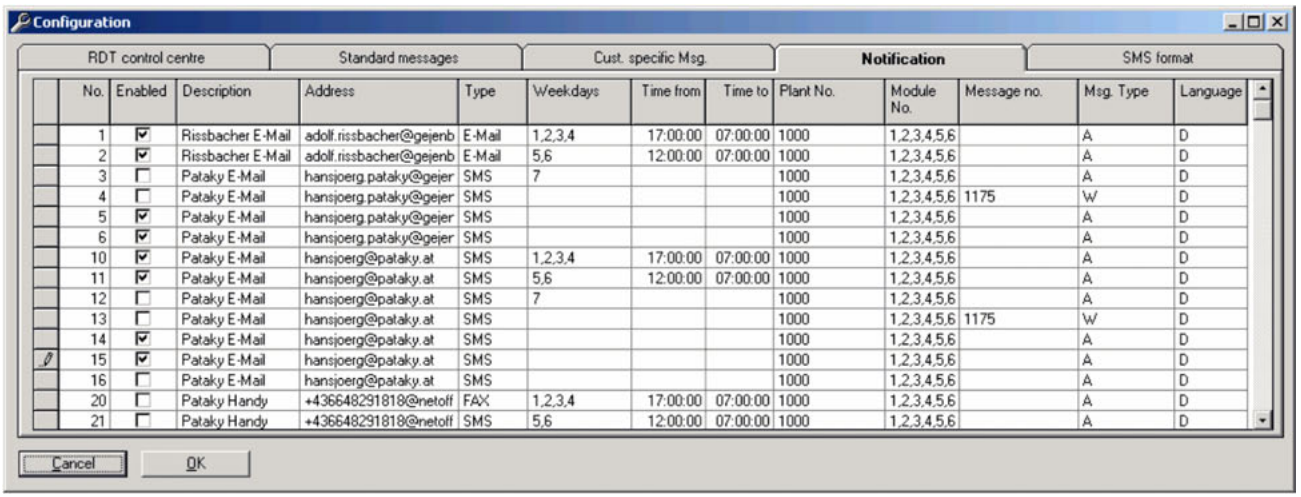

No.	Enabled	Description	Address	Type	Weekdays	Time from	Time to	Plant No.	Module No.	Message no.	Msg. Type	Language
1	☑	Rissbacher E-Mail	adolf.rissbacher@gejenb	E-Mail	1,2,3,4	17:00:00	07:00:00	1000	1,2,3,4,5,6		A	D
2	☑	Rissbacher E-Mail	adolf.rissbacher@gejenb	E-Mail	5,6	12:00:00	07:00:00	1000	1,2,3,4,5,6		A	D
3	☐	Pataky E-Mail	hansjoerg.pataky@gejer	SMS	7			1000	1,2,3,4,5,6		A	D
4	☐	Pataky E-Mail	hansjoerg.pataky@gejer	SMS				1000	1,2,3,4,5,6	1175	W	D
5	☑	Pataky E-Mail	hansjoerg.pataky@gejer	SMS				1000	1,2,3,4,5,6		A	D
6	☑	Pataky E-Mail	hansjoerg.pataky@gejer	SMS				1000	1,2,3,4,5,6		A	D
10	☑	Pataky E-Mail	hansjoerg@pataky.at	SMS	1,2,3,4	17:00:00	07:00:00	1000	1,2,3,4,5,6		A	D
11	☑	Pataky E-Mail	hansjoerg@pataky.at	SMS	5,6	12:00:00	07:00:00	1000	1,2,3,4,5,6		A	D
12	☐	Pataky E-Mail	hansjoerg@pataky.at	SMS	7			1000	1,2,3,4,5,6		A	D
13	☐	Pataky E-Mail	hansjoerg@pataky.at	SMS				1000	1,2,3,4,5,6	1175	W	D
14	☑	Pataky E-Mail	hansjoerg@pataky.at	SMS				1000	1,2,3,4,5,6		A	D
15	☑	Pataky E-Mail	hansjoerg@pataky.at	SMS				1000	1,2,3,4,5,6		A	D
16	☐	Pataky E-Mail	hansjoerg@pataky.at	SMS				1000	1,2,3,4,5,6		A	D
20	☐	Pataky Handy	+436648291818@netoff	FAX	1,2,3,4	17:00:00	07:00:00	1000	1,2,3,4,5,6		A	D
21	☐	Pataky Handy	+436648291818@netoff	SMS	5,6	12:00:00	07:00:00	1000	1,2,3,4,5,6		A	D

No. (mandatory information!)

Unique, freely selectable identification number.

Enabled

Enabled/Disabled communication participant

Description (mandatory information!)

Freely selectable description of the participant to be notified.

GE Proprietary Information: CONFIDENTIAL! Use or disclosure of data contained on this sheet is subject to the restrictions on the cover or on the first page.

Address (mandatory information!)

E-mail or fax address of the participant to be notified (e-mail address or name of address book entry).

Type (mandatory information!)

There are four communication types:

- *SMS* (e-mail to Internet SMS Gateway)
  Format: All message information can be freely configured and does not contain any special characters (see section 3.5.5).
- *E-mail*
  format: All available message information is transmitted. The message is a text file. The lines are followed by CR +LF.
- *FAX*
  Format: All available message information is transmitted. The message is a text file. The lines are followed by CR +LF.
- *Voice*
  Nothing more than a call is placed to the participants. If no contact can be established, no error message is transmitted!

All other communication criteria are AND coupled (i.e. all conditions must be met). If a field is left blank, no check will be made for this criterion.

Weekdays

This field is used to indicate the weekdays on which the participant notification mode should be active (1=Monday, 2=Tuesday etc.). If you want to enter several days (e.g. "1, 2, 7"), these should be separated by commas. If nothing is entered, there is no time limit.

Time from, Time to

Used to enter the time range during which the participant notification mode should be active. If nothing is entered, there is no time limit.

Plant No.

If the plant number of the message received matches the plant number configured here, the message is forwarded.

Module No.

If the module number of the message received matches the module number configured here, the message is forwarded. If you want to enter several modules (e.g. "1, 3, 5"), these should be separated by commas.

Message No.

Used to enter the message number at which this participant should be notified.

GE Proprietary Information: CONFIDENTIAL! Use or disclosure of data contained on this sheet is subject to the restrictions on the cover or on the first page.

Msg. Type

If the message type of the message received corresponds to the message type configured here, the message is forwarded. If you want to enter several types (e.g. "A, W"), these should be separated by commas.

Language (mandatory information!)

Used to enter the language (as country identification code, see section 3.5.1) in which the participant should be notified.

2.3.4.5.5 SMS format

This tab is used to configure the SMS format for the communication.

The information to be transmitted may consist of the following database entries:

- Date & time of the message (from AMM)
- Plant
- Module number
- Message type
- Message text
- Plant number
- Module name
- Message number
- Date and time of message (entry in message database)
- Free text

The contents of the *Free text* field are the "Subject" of the SMS message concerned.

2.3.4.6 Password protection

DIA.NE control is password protected to prevent unauthorised access to its configuration.

Logon

In order to be able to modify the configuration, the user has to log on. During the logon dialogue, the password must be entered.

Logoff

Having modified the configuration, it is recommended that the user log off. This will protect the configuration from unauthorised access by third parties.

Because the procedure for closing DIA.NE control is also password protected, the users have to log on before they can close the program. This is not required when closing Windows.

During the password entry dialogue, the user has the option of changing the password.

GE Proprietary Information: CONFIDENTIAL! Use or disclosure of data contained on this sheet is subject to the restrictions on the cover or on the first page.

ATTENTION!

Following installation, the default password in the configuration is "6020". This password should be changed immediately when activating the program for the first time.

2.3.5 Help menu

2.3.5.1 Help

To help resolve any questions about DIA.NE control, you have an extensive Windows-type help function at your disposal in which all program elements are described in detail.

2.3.5.2 About DIA.NE control

This dialogue box will give you the copyright information and the program version.

2.4 DIA.NE report

DIA.NE report can be used to display and print the messages received in an RDT control centre on any number of processing stations (standard workstations). To that end, the workstations must be connected to the RDT control centre via a LAN. Both the language and the plants selected can be pre-set for the message display.

In order to automate protocolling, all plant-specific messages received can be printed on a daily basis. Using DIA.NE report, manually compiled protocols can be printed at any time.

2.4.1 Using the multi-user environment

To enable DIA.NE report to be individually configured on several workstations, you should add the hash mark (#) and the workstation number to the DIA.NE report command line.

Example:	for station 1:	C:\Program Files\diane\DianeReport.exe **#1**
	for station 2:	C:\Program Files\diane\DianeReport.exe **#2**
	for station 3:	C:\Program Files\diane\DianeReport.exe **#3**
	. . .	

2.4.2 Main screen

Following the call by DIA.NE report, the main screen is displayed. This screen contains the configured customer data (“Customer name”), filter criteria and table view of the message data.

GE Proprietary Information: CONFIDENTIAL! Use or disclosure of data contained on this sheet is subject to the restrictions on the cover or on the first page.

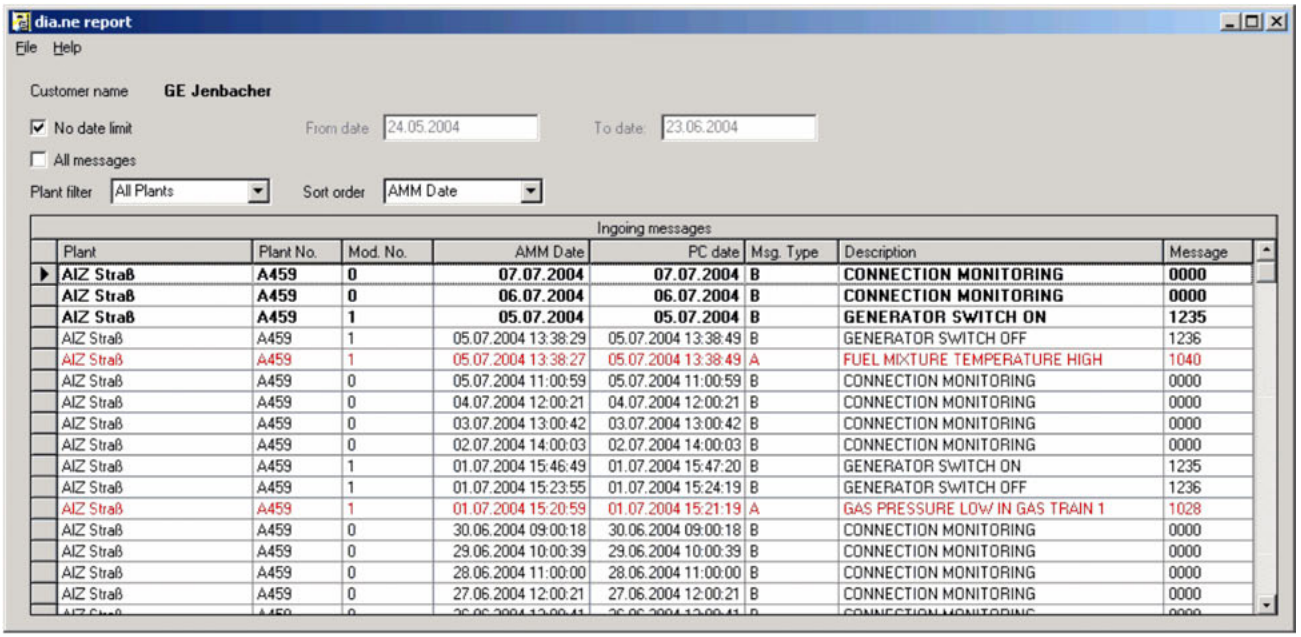

Plant	Plant No.	Mod. No.	AMM Date	PC date	Msg. Type	Description	Message
AIZ Straß	**A459**	**0**	**07.07.2004**	**07.07.2004**	**B**	**CONNECTION MONITORING**	**0000**
AIZ Straß	**A459**	**0**	**06.07.2004**	**06.07.2004**	**B**	**CONNECTION MONITORING**	**0000**
AIZ Straß	**A459**	**1**	**05.07.2004**	**05.07.2004**	**B**	**GENERATOR SWITCH ON**	**1235**
AIZ Straß	A459	1	05.07.2004 13:38:29	05.07.2004 13:38:49	B	GENERATOR SWITCH OFF	1236
AIZ Straß	A459	1	05.07.2004 13:38:27	05.07.2004 13:38:49	A	FUEL MIXTURE TEMPERATURE HIGH	1040
AIZ Straß	A459	0	05.07.2004 11:00:59	05.07.2004 11:00:59	B	CONNECTION MONITORING	0000
AIZ Straß	A459	0	04.07.2004 12:00:21	04.07.2004 12:00:21	B	CONNECTION MONITORING	0000
AIZ Straß	A459	0	03.07.2004 13:00:42	03.07.2004 13:00:42	B	CONNECTION MONITORING	0000
AIZ Straß	A459	0	02.07.2004 14:00:03	02.07.2004 14:00:03	B	CONNECTION MONITORING	0000
AIZ Straß	A459	1	01.07.2004 15:46:49	01.07.2004 15:47:20	B	GENERATOR SWITCH ON	1235
AIZ Straß	A459	1	01.07.2004 15:23:55	01.07.2004 15:24:19	B	GENERATOR SWITCH OFF	1236
AIZ Straß	A459	1	01.07.2004 15:20:59	01.07.2004 15:21:19	A	GAS PRESSURE LOW IN GAS TRAIN 1	1028
AIZ Straß	A459	0	30.06.2004 09:00:18	30.06.2004 09:00:18	B	CONNECTION MONITORING	0000
AIZ Straß	A459	0	29.06.2004 10:00:39	29.06.2004 10:00:39	B	CONNECTION MONITORING	0000
AIZ Straß	A459	0	28.06.2004 11:00:00	28.06.2004 11:00:00	B	CONNECTION MONITORING	0000
AIZ Straß	A459	0	27.06.2004 12:00:21	27.06.2004 12:00:21	B	CONNECTION MONITORING	0000

Ingoing messages

The *Ingoing* messages table shows the messages that have been received from various DIA.NE WIN servers (DIA.NE message) in the RDT control centre's message database.

The table items are arranged in reverse chronological order. The order can be set using the Sort order field. The most recent entries can be found at the top of the table. The table is automatically updated and/or can be manually updated by pressing function key "F5" or choosing *Refresh display* from the File menu.

Resetting

New entries are displayed in bold type. Double-clicking on a line or pressing the *Enter* key will "quit" this message changing it to non-bold type. At the same time, the *Quit* check box is enabled.

Once you have enabled "Quit", you cannot disable it.

From date / To date

If so desired, the messages displayed can be chronologically filtered using the criteria *From date* and *To date*. This filter uses the AMM date on the message.

No date limit

Clicking this box will cancel the date limit.

All messages

DIA.NE report distinguishes between "Critical Messages" which are automatically transmitted to the RDT control centres on the basis of a pre-set condition in DIA.NE message, and "Non-Critical Messages", which are transmitted to the RDT control centre based on automatic or manual database matching.

GE Proprietary Information: CONFIDENTIAL! Use or disclosure of data contained on this sheet is subject to the restrictions on the cover or on the first page.

In general, DIA.NE report only displays "Critical Messages" in the Ingoing messages table. If the *All messages* check box is enabled, the "Non-critical messages" are also displayed.

Plant filter

Selecting a specific plant reduces the message display to the selected plant.

Sort order

Select this to change the order in which messages are sorted.

AMM Date: Sorting based on the AMM date.

Chronological: Sorting based on order in which messages (Nos.) are received.

The *Main screen* contains two menu commands, *File* to access the other windows and *Help* to access the online help.

2.4.3 File menu

2.4.3.1 Refresh display

This menu command is used to manually update the main screen display.

2.4.3.2 Print

This menu command is used to print all messages displayed on the main screen.

The *Print options* dialogue box contains the following tabs:

Output

This tab is used to select the output type.

- *Printer*:
  The *Printer* ... item is used to select the desired printer.
- *File*:
  print output is converted into an ASCII file. The *File* ... item is used to select the desired path and file name.
- *Print lines*:
  This item is used to print the entire contents of the *Ingoing messages* table, all the messages selected or just the current message. The selection is made on the left side of the *Ingoing messages* table.

Print to preview window first:
If this check box is enabled, the item is displayed in the print preview window first before actually being sent to the printer.

Print options

- *Range*:
  This option makes it possible to limit the number of pages to be printed.
- *Frame*:
  This option makes it possible to adjust the frame settings for the print layout.

GE Proprietary Information: CONFIDENTIAL! Use or disclosure of data contained on this sheet is subject to the restrictions on the cover or on the first page.

Row multiple line:
Allows a hard return to entered in the output fields.

Columns

This tab allows you to select the message information to be used when printing.

Fonts

This item is used to select the font for headers and footers in order to modify the print layout.

Click the Print button to start printing.

If the *Print to preview window first* check box is enabled, a print preview window is opened before printing.

2.4.3.3 Caller

This table shows which DIA.NE WIN servers (**DIA.NE message**) have called this RDT control centre and displays the connection control status.

When a connection between a new **DIA.NE WIN** server and the RDT control centre is established for the first time, a new item is entered into this table containing the plant data.

Plant

Name of the plant whose DIA.NE WIN server has called.

Plant No.

Plant number of the caller.

Location

Contents of the DIA.NE message address field.

Last call

Date and time of last call during which messages were saved.

Last message matching

Date and time of last call during which "Non-Critical Messages" were transmitted (because of manual or automatic database matching by DIA.NE message).

Last trend file matching

Date and time of last call during which trend files were transmitted.

Last report matching

Date and time of last call during which report files were transmitted.

GE Proprietary Information: CONFIDENTIAL! Use or disclosure of data contained on this sheet is subject to the restrictions on the cover or on the first page.

Conn. Monitoring

If this check box is enabled, the entire line is displayed in red whenever connection monitoring is selected. This will typically be the case if more than 24 hours have passed between the current date and the “Last call” date.

In that case, the Connection monitoring function in DIA.NE message should be activated for this RDT control centre (see DIA.NE message documentation).

2.4.3.4 Configuration

Because a number of computers may be accessing the same message database using DIA.NE report, the DIA.NE report configurations for every workstation are stored separately. This enables a user-defined DIA.NE report environment for every workstation.

2.4.3.4.1 General

Number of days displayed (mandatory information)

This field limits the number of messages shown in the Ingoing messages table to a maximum number of days.

UNC path to database (mandatory information)

If DIA.NE report is to display the contents of a message database, its path (on the RDT control centre) should be entered here.

Database local to computer

"<Drive>:\<DIA.NE RMC - program directory>" z.B.: C:\Program Files\diane

Database on network computer

"\\<Computername>\<Share>" e.g.: \\RDTCenter_1\diane

Message protocols

These settings enable automatic logging of all messages received in the last 24 hours. This will take place daily at the pre-set time (e.g. “16:00”) on the pre-selected printer. The text in the Free text for automatic protocols field will be printed in the heading of the message protocol. The printout contains all message information. Printout format: A4, landscape.

Language (mandatory information!)

This field is used to select the language used for displaying or printing a message (D, F, I, GB, etc.).

2.4.3.4.2 Display

Plants displayed

This table is used to enter the plants to be displayed. If the table is left empty, no messages will be displayed.

The plants to be displayed can be selected from the Plant combo box. This makes all known plants (plants which are actually connected) available.

GE Proprietary Information: CONFIDENTIAL! Use or disclosure of data contained on this sheet is subject to the restrictions on the cover or on the first page.

Visible fields

In these fields, the message information to be displayed in the Ingoing messages table of the main screen can be selected. Information not visible in the main screen cannot be printed.

2.4.3.5 Help menu

2.4.3.6 Help

To help resolve any questions about DIA.NE report, you have an extensive Windows-type help function at your disposal in which all program elements are described in detail.

2.4.3.7 About DIA.NE report

This dialogue box gives you the copyright information and the program version.

2.5 DIA.NE message

DIA.NE message is installed on the plant's DIA.NE WIN servers. This program transmits messages and data to DIA.NE control in the RDT control centres.

2.5.1 Transmission of messages

All the messages generated by the module are logged by a program on the DIA.NE WIN server (alarm logger). These Operational messages (B), Warnings (W) and Trip messages (A) are written to files and further processed by DIA.NE message.

In order to transmit the messages more efficiently, the messages on the modules are checked first against various criteria before being transmitted.

The following criteria can be set:

- Module No. / Module name
- Message No. / Description
- Message type
- Weekdays
- Time of appearance

If a message is classified as being a "Critical message", the plant name, plant number, module identification and module number are added to it, after which the message is automatically transmitted to the RDT control centres configured.

TIP!

Changing date and time on the modules and the DIA.NE WIN server can result in duplicated transmissions or 'gaps' in the DIA.NE control database.

GE Proprietary Information: CONFIDENTIAL! Use or disclosure of data contained on this sheet is subject to the restrictions on the cover or on the first page.

2.5.2 Failed connection to modules

If the messages logged by DIA.NE message cannot be loaded, DIA.NE message generates a special warning message.

The warning message contains the following items:

- Description: Module inaccessible
- Message No.: 0001
- Message type: W

2.5.3 File transmission

Historical measurement data and logbook data are cyclically logged and stored in files on the DIA.NE WIN servers.

The files stored on the modules can be transmitted both manually and automatically to any RDT control centre by DIA.NE message.

2.5.4 Main screen

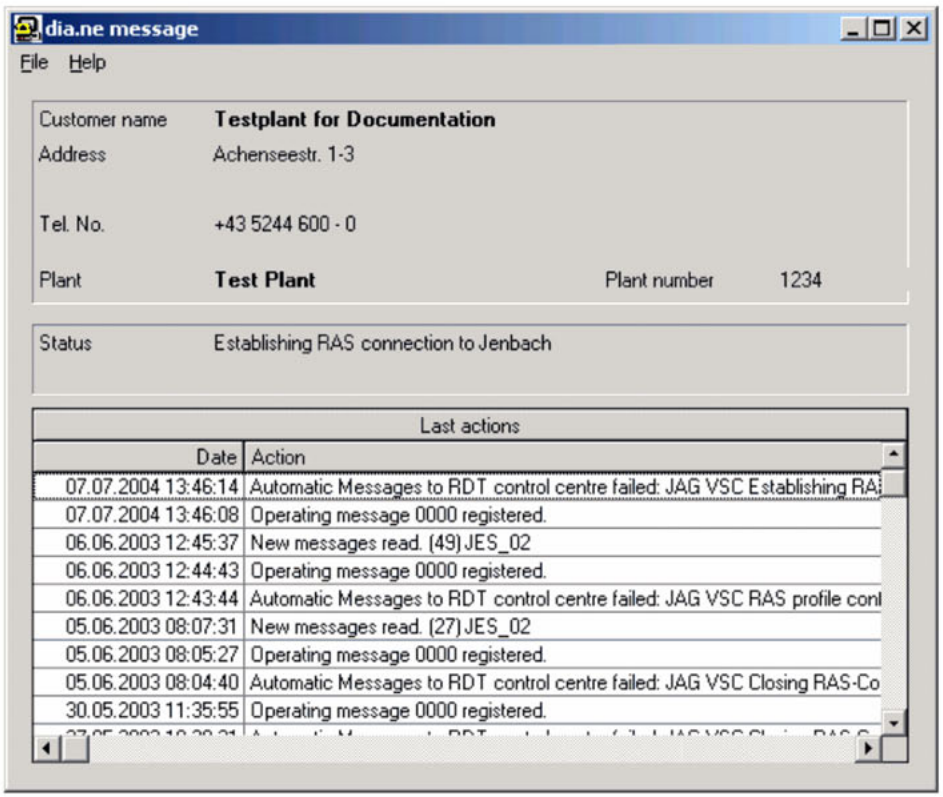

When DIA.NE message starts up, the main screen is displayed. It shows the configured plant data ("Customer name", "Address", "Tel. No.", "Plant" and "Plant number") and the current status of the program. In this status field, all actions executed by the program at the time are shown, e.g. checking the log files, transmitting messages etc.

GE Proprietary Information: CONFIDENTIAL! Use or disclosure of data contained on this sheet is subject to the restrictions on the cover or on the first page.

Last actions

The *Last actions* table shows the activities of DIA.NE message.

The table items are arranged in reverse chronological order. The most recent entries can be found at the top of the table. The table is automatically updated.

From the *Main screen* access to the other windows is via the File menu item, and to the online help via the *Help* menu item.

2.5.5 File menu

2.5.5.1 Database matching with RDT control centre

Database matching with RDT control centres is used to transmit all messages which have not been configured for auto alarm activation ("Non-critical messages"). It can also be used to transmit trend and logbook files. In addition to manual data matching, it is also possible to configure automatic data matching.

A combo box will appear from which the desired RDT control centre must be selected. Data matching can be limited by using the *From date* and *To date* entry fields. Click the *Select* button to initiate the transfer.

Transmission to the following RDT control centre:

One specific centre can be selected from the list of all configured RDT control centres. RDT control centres are defined using the identification and the RAS profile name.

From date / To date:

The date range for messages yet to be transmitted is automatically entered in these text boxes. If the date range is extended, **DIA.NE** message will read out the required messages from the modules as well. Following successful completion of this procedure, data transmission to the RDT control centre is started.

2.5.5.2 Message log book

This menu command is used to view and delete the DIA.NE message log book. This log book contains DIA.NE control system entries.

2.5.5.3 Configuration

The DIA.NE message configuration window contains the following tabs:

2.5.5.4 Plant data

This item is used to enter the plant data ("Customer name", "Address", "Tel. No.", "Plant" and "Plant number") of the DIA.NE WIN server ("Customer name" and "Plant number" are mandatory!).

Ring buffer capacity

This value indicates the length of time that “Non-critical messages“ are to remain stored in the DIA.NE message database.

GE Proprietary Information: CONFIDENTIAL! Use or disclosure of data contained on this sheet is subject to the restrictions on the cover or on the first page.

Scan interval for modules

The scan interval is used to determine the frequency with which DIA.NE message searches for new messages. Zero means as quickly as possible.

Number of messages displayed

The value entered indicates the number of items in the Last actions table. A maximum of 200 items can be displayed. If the pre-set number is exceeded, the oldest item is overwritten.

Language

This field is used to select the language in which message text is displayed (D, F, I, GB, etc.).

Closing Interval

TIP!

This function only applies to modem servers with DIA.NE plants and must not be activated on DIA.NE WIN servers!!!

Activating this field and indicating a time shuts down the program in a controlled manner. Together with the Power off program installed on the modem server, this achieves a controlled re-boot of the modem server.

In the Days field, the shutdown procedure can be limited to specific days (1=Monday, 2=Tuesday, etc.). If you want to enter several days (e.g. "1, 2, 7"), these should be separated by commas. If no specific day has been entered, there is no limitation (= every day).

2.5.5.5 Modules

This item is used to enter the plant modules. The following fields can be filled for each of the modules:

Scan (mandatory information)

Clicking on this field will activate or deactivate the search for new messages per module.

Description (mandatory information!)

The engines are identified as follows:

Module M01 = JES_01

Module M02 = JES_02

etc

Module (mandatory information)

The module number corresponds to the engine number.

UNC path (mandatory information)

The UNC path indicates the directory structure through which DIA.NE message can reach the log files

GE Proprietary Information: CONFIDENTIAL! Use or disclosure of data contained on this sheet is subject to the restrictions on the cover or on the first page.

e.g. DIA.NE WIN server for DIA.NE XT / WIN plants: "C:\log\M01"
modem server for DIA.NE plants: \\jes_01\c-drive\log

2.5.5.6 RDT control centres

This tab is used to enter all RDT control centres to be notified by DIA.NE message.

No.

The program will issue a running number.

Row

This item is used to indicate the sequence in which the RDT control centres are to be notified.

Backup only

If one of the RDT control centres cannot be reached, another RDT control centre (backup) to be notified can be defined here.

Description (mandatory information!)

Free description of the RDT control centre.

Enabled (mandatory information)

If one of the RDT control centres cannot be reached temporarily, this item is used to deactivate the release. All messages received in the meantime will be held back and will be transmitted after the release is reactivated.

RAS profile

Name of the RAS connection object through which the connection to the RDT control centre should be established (Control Panel - Settings - Network and Dial-up connections). If the RDT control centre is directly coupled to the DIA.NE WIN server via a LAN (LAN connection option), this field must be left blank.

Conn. Monitoring

If the connection control is activated, a special operating notification is transmitted to the RDT control centre (watchdog). This message is transmitted when no message has been transmitted for the last 23 hours.

The operating notification contains the following items:

- Description: Connection Monitoring
- Message No.: 0000
- Message type: B
- Module number: 0

UNC path (mandatory information)

Path on the RDT control centre where the message database is stored.

GE Proprietary Information: CONFIDENTIAL! Use or disclosure of data contained on this sheet is subject to the restrictions on the cover or on the first page.

This setting must match the setting on the RDT control centre.

Default: "\\<Workstation name>\<Share>" e.g. \\Computer_1\diane

Last status

Last status of the DIA.NE WIN server (communication with RDT control centre successful or unsuccessful). The status is automatically updated when the window is opened.

Weekdays

Used to indicate the weekdays on which messages should be transmitted to an RDT control centre (1=Monday, 2=Tuesday, etc.). If nothing is entered, there is no time limit. If you want to enter several days (e.g. "1, 2, 7"), these should be separated by commas.

Time from, Time to

Time within which the messages received should be transmitted to an RDT control centre. If nothing is entered, there is no time limit. In order to activate a transmission, both a weekday and a time from/to should be entered

Backup 1

If it is not possible to transmit any messages, you can specify a backup centre here which is to be notified. The figure indicated under **Number** should be entered (see first column).

This backup centre will not be used during manual or automatic data matching.

Backup 2

If messages cannot be transmitted to the first backup centre either, a second backup centre can be defined here.

Data matching - Time

This field is used to enter the exact time at which the automated data matching with the RDT control centres should be carried out.

Data matching - Days

The data matching operation defined under Time can be limited to certain weekdays (1=Monday, 2=Tuesday, etc.). If you want to enter several days (e.g. "1, 2, 7"), these should be separated by commas.

2.5.5.7 Transmitted message

This tab is used to enter the criteria for those messages which are to be classified by DIA.NE message as messages to be transmitted ("Critical Messages").

For a functional configuration, at least one module reference (“Description” or “Module number”) or one message reference (“Message text”, “Message number” or “Message type”) must be entered!

GE Proprietary Information: CONFIDENTIAL! Use or disclosure of data contained on this sheet is subject to the restrictions on the cover or on the first page.

Module No.

A combo box is used to enter information. Click the drop-down button to select the configured modules from a list (see 3.3.2). If the module number of the received message matches the number entered here, the message is classified as a message to be transmitted (“Critical Message”). If the box is left blank, no check will be made for this criterion (meaning that for all plant modules the corresponding message will be transmitted if the message type and message number match). When the drop-down button is used to make a selection, the module name will be entered into the *Module* field automatically.

Mod. name

Name of the module selected in the *Module No.* field.

Description

A combo box is used to enter information. Click the drop-down button to select a specific message from the list. The list is in sorted alphabetically. Selecting a text will automatically cause the “Msg. No." and “Msg. Type" to be entered into the corresponding cells.

Msg. No.

If the message number matches the number indicated here, the message is classified as a message to be forwarded (“Critical Message”). If the field is left blank, no check will be made for this criterion. A combo box is used to enter information. Click the drop-down button to retrieve a specific message from the list. The list is sorted numerically. Selecting a text will automatically cause the “Description" and “Msg. Type" to be entered automatically in the corresponding cells.

Msg. Type

If the message type corresponds to the letters entered here (e.g. A = trip, W = warning, B = Operational), the message is classified as a message to be forwarded ("Critical Message”). If the field is left blank, no check will be made for this criterion. If only the message type is entered without the message number, this means that all messages of this type will be classified as messages to be forwarded. Multiple input in the “A, W” format is valid.

Weekdays

The message is checked for a weekday. The numbers 1 through 7, representing Monday through Sunday respectively, can be entered (e.g. 1=Monday, 2=Tuesday, etc.) in this field. If the field is left blank, no check will be made for this criterion. If you want to enter several weekdays (e.g. "1, 2, 7"), these should be separated by commas. In order to have the message forwarded, the weekday requirement must be fulfilled.

Time from, Time to

If the time stamp of the message received falls within the pre-set “Time from / Time to” range, the message is classified as a message to be forwarded ("Critical Message"). If a field is left blank, no check will be made for this criterion. In order to have the message forwarded, the “Time from/Time to” requirement must be fulfilled.

2.5.5.8 Data matching

This tab is used to establish which files are to be transferred in the course of the automatic data matching process.

GE Proprietary Information: CONFIDENTIAL! Use or disclosure of data contained on this sheet is subject to the restrictions on the cover or on the first page.

The following data can be transferred.

- **Messages:**These are all messages which have not yet been transmitted ("Non-Critical Messages").
- **Trends:**These are files that contain historical measurement data. The file name may be freely selected and can contain wildcards (*, ?) (e.g. *.mdb).
  The files are stored at the RDT control centre in the directory ..\<Plant number>\<Module no>\LOG.
- **Reports:**These are files that contain log book data. The file name may be freely selected and can contain wildcards (*, ?) (e.g. *.xml).
  The files are stored at the RDT control centre in the directory ..\<Plant number>\<Module no>\REP.

RDT Centre No.

If you enter an RDT control centre in this field, the configuration line will be restricted to the specified RDT control centre.

2.5.5.9 Messages registered

This table contains all the messages received from the modules which still must be transmitted to DIA.NE control.

Delay transmission of messages to RDT control centres

Activating this option will stop transmission of all messages to the RDT control centres. All messages received in the meantime will be stored and will be forwarded after the transmission is reactivated.

2.5.5.9.1 Password protection

DIA.NE control is password-protected to prevent unauthorised access to its configuration.

Logon:

In order to be able to modify the configuration, the user has to log on. During the logon dialogue, the password must be entered.

Logoff:

Having modified the configuration, it is recommended that the user log off. This will protect the configuration from unauthorised access by third parties.

Because the procedure for closing DIA.NE control is also password protected, the users have to log on before they can close the program. This is not required when closing Windows.

During the password entry dialogue, the user has the option of changing the password.

ATTENTION!

Following installation, the default password in the configuration is "6020". This password should be changed immediately when activating the program for the first time.

GE Proprietary Information: CONFIDENTIAL! Use or disclosure of data contained on this sheet is subject to the restrictions on the cover or on the first page.

2.5.6 Help menu

2.5.6.1 Help

To help resolve any questions about DIA.NE message, you have an extensive Windows-type help function at your disposal in which all program elements are described in detail.

2.5.6.2 About DIA.NE message

This dialogue box will give you the copyright information and the program version.

2.6 Installation instructions – configuration instructions

This section describes how to configure the network connection between the DIA.NE WIN client and the DIA.NE WIN server to access the DIA.NE WIN application.

It also describes how to install and configure the DIA.NE RMC application on the server and client.

2.6.1 Configuring an RDT network connection between a DIA.NE WIN client and server (modem option only)

An RDT network connection is used to establish a TCP/IP network connection between the DIA.NE WIN client and DIA.NE WIN server through which data are transferred to the DIA.NE WIN application.

TIP!

To complete the following steps, users must have

LOCAL ADMINISTRATOR RIGHTS

Windows 2000

- Open the *Network* and *Dial-up* Connections folder in Control Panel
- Select *Make New Connection* and use the wizard to create a new connection
- After the welcome message, select Dial-up to *private network* in the *Network Connection* type dialogue box.
- In the next dialogue box, select the desired modem for incoming calls.
- In the *Phone Number* to Dial dialogue box, enter the telephone number of the desired DIA.NE WIN server.
- In the next dialogue box, you can choose whether to allow all users of this computer or only the current user to use the RDT connection.
- In the last dialogue box, you can assign a name to the connection.
- Once the connection object has been created, double-click the object to open it.
- In the dialogue box that now appears, click the *Properties* button to go to the properties side of the connection.
- Select the *Options* dialogue box and, in the *Idle time before hanging up* field, set the time after which the RDT connection itself hangs up if no more data are transported.
- Go to the *Networking* dialogue box and select the *Internet Protocol (TCP/IP)* component.

GE Proprietary Information: CONFIDENTIAL! Use or disclosure of data contained on this sheet is subject to the restrictions on the cover or on the first page.

- Click the *Properties* button to go to the properties side and click the *Advanced...* button to open the advanced settings.
- Uncheck the *Use default gateway on remote network* check box.
- Close all dialogue boxes by clicking *OK*.

Windows XP

- Open the *Network Connections* folder in *Control Panel*
- Select *Create a new connection* and use the wizard to create a new connection
- After the welcome message, select "Connect to the network at my workplace" in the *Network Connection Type* dialogue box.
- In the next dialogue box, select *Dial-up connection* and continue with the wizard.
- Enter the desired name for the connection under *Connection Name*.
- In the *Phone Number to Dial* dialogue box, enter the telephone number of the desired DIA.NE WIN server and click Finish in the wizard.
- Once the connection object has been created, double-click the object to open it.
- In the dialogue box that now appears, click the *Properties* button to go to the properties side of the connection.
- Select the *Options* dialogue box and, in the "Idle time before hanging up" field, set the time after which the RDT connection itself hangs up if no more data are transported.
- Go to the *Networking* dialogue box and select the *Internet Protocol (TCP/IP)* component.
- Click the *Properties* button to go to the properties side and click the *Advanced...* button to open the advanced settings.
- Uncheck the *Use default gateway on remote network* check box.
- Close all dialogue boxes by clicking *OK*.

When you have established the RDT network connection, start the DIA.NE WIN client in accordance with DIA.NE WIN Online Documentation.

When you have finished working on the DIA.NE WIN application, you should disconnect the RDT network connection as soon as possible for cost reasons.

If you have any queries or problems, please contact the GE JenbacherCompetence Centre!

2.6.2 Configuring a network connection between a DIA.NE WIN client and server (LAN option only)

A GE Jenbacher service engineer will configure the network connection between the DIA.NE WIN client and the DIA.NE WIN server when the plant is being commissioned.

Information required from the customer (desired configuration):

- IP address of the DIA.NE WIN server (default: 172.31.200.100)
- Subnet mask of the network (default: 255.255.0.0)
- Default Gateway of the network (default: 172.31.1.1)
- IP address of the customer's computer (suggestion: 172.31.1.1 / 255.255.0.0 / 172.31.200.100)

GE Proprietary Information: CONFIDENTIAL! Use or disclosure of data contained on this sheet is subject to the restrictions on the cover or on the first page.

2.6.3 Configuring an Internet connection between a DIA.NE WIN client and server (Internet option only)

If the plant is to have an Internet connection, the DIA.NE WIN client computer must likewise have an Internet connection. This can be either a dial-up or broadband connection (DSL) to the Internet service provider (ISP) or a central Internet access point in any company network.

The Internet access point must provide at least the following services (protocols):

- **http** (web access)
- **http** (encrypted web access)

The actual configuration of the Internet access must be performed by the customer and cannot be supported by GE Jenbacher because of the wide variety of provider and network configurations.

The GE Jenbacher Competence Centre will be pleased to assist with any general questions on Internet access.

2.6.4 Configuring the DIA.NE WIN server

DIA.NE message is pre-installed as standard on every DIA.NE WIN server.
The program can be configured either by the GE Jenbacher Competence Centre or by the customer.

In order to carry out the configuration at the DIA.NE WIN server, the DIA.NE WIN server must be controlled remotely by remote maintenance software.

2.6.4.1 Remote maintenance of the DIA.NE WIN server

To configure the DIA.NE WIN server, a network connection (TCP/IP) must be established with the DIA.NE WIN server (via modem, LAN or the Internet).

A VNC Remote Control Session, which is used for the remote control of the DIA.NE WIN server, can be established through this connection.

The VNC program (i.e. the VNC viewer) can be obtained from the manufacturer's website http://www.realvnc.org or from the GE Jenbacher web server http://www.jenbacher.com/dianewin/download.htm.

The VNC software is covered by the GNU General Public Licence and is therefore free of charge.

When the software starts, enter the IP address of the DIA.NE WIN server as the destination and a password. The address will depend on the connection type selected and its configuration.

Default:	via modem:	10.200.200.200
	via LAN:	172.31.200.100

The password for the VNC connection must be requested from the GE Jenbacher Competence Centre.

If you have any queries or problems, please contact the GE JenbacherCompetence Centre!

2.6.4.2 Configuring DIA.NE message

- Open the dialogue box: *Configuration*
- The *Plant Data* form is displayed.
- Enter the data for the first form (minimum information: Plant, Plant number)
- Go to the *Modules* form

GE Proprietary Information: CONFIDENTIAL! Use or disclosure of data contained on this sheet is subject to the restrictions on the cover or on the first page.

- Activate the desired modules by enabling the *Scan* check box and verify the UNC paths
- Go to the *RDT control centres* form
- Configure the RDT control centres (minimum information: “Row“, “Description“, “RAS profile“ (modem connection only, the field remains blank for network connection!), “UNC path“, “User name“, “Password“, “Enabled“ and “Conn. Monitoring”)
- Go to the *Transmitted message* form
- Configure the desired messages to be transmitted (minimum information: “Msg. No.“ or “Msg. Type”)
- *Optional:*Go to the *Data matching form*
- *Optional:*Configure the desired data for database matching
- Click the *OK* button to exit the configuration dialogue box
- *If using the modem connection option*: Configure the RDT network (see next point). The connection object must have the same name as specified in the “RAS profile“ field in the *RDT control centres* configuration dialogue box.

If you have any queries or problems, please contact the GE JenbacherCompetence Centre!

2.6.4.3 Configuring the RDT network (modem option only)

An RDT network gives a computer access to enabled resources (drives) on a workstation (RDT control centre with DIA.NE control database), even if it is not on the same network. In this case, the workstation you select must be equipped with a modem and configured as an RAS server.

Set-up procedure

- Open the *Network* and *Dial-up* Connections folder in *Control Panel*
- Select “Dummy“ and make a copy of the connection using
  Create Copy in the *File* menu
- Rename the new object using *Rename* in the File menu.
  TIP The name of the connection object must be identical to the name of the “RAS profile” in the DIA.NE message configuration!
- To change the connection object to the desired RDT control centre, double-click the object to open it.
- In the dialogue box that now appears, click the *Properties* button to go to the properties side of the connection.
- Change the telephone number to the RDT control centre you want to select (*Phone number* field), and if necessary select the modem to be used from the *Connect using* field. (ISDN, GSM, etc.)
- Confirm the configuration dialogue and click *Cancel* to close the connection object.

2.6.4.4 Configuring the network connection for the RDT control centre (LAN option only)

The configuration of the network connection from the DIA.NE WIN server to the customer’s computer (RDT control centre or DIA.NE WIN client) must be carried out by a GE Jenbacher service engineer. This configuration is identical to setting up the network connection to use the DIA.NE WIN client as described in the section on **Configuring a network connection between a DIA.NE WIN client and server (LAN option only)**
.Information required from the customer (desired configuration):

- IP address of the DIA.NE WIN server (default: 172.31.200.100)

GE Proprietary Information: CONFIDENTIAL! Use or disclosure of data contained on this sheet is subject to the restrictions on the cover or on the first page.

- Subnet mask of the network (default: 255.255.0.0)
- Default Gateway of the network (default: 172.31.1.1)
- IP address of the customer's computer (suggestion: 172.31.1.1 / 255.255.0.0 / 172.31.200.100)
  TIP The IP address of the customer's computer is derived from the UNC path in the DIA.NE message configuration for this RDT control centre: \\<IP address>\<share>
  (e. g. \\172.31.1.1\diane**)**

2.6.5 Installing/configuring the RDT control centre

TIP!

The software can only be installed if the user has

local Administrator Rights.

The user must also be familiar with the operation and maintenance of Windows 2000 / XP

and with the installation of software packages.

The customer must prepare the computer as follows for the installation of the RDT control centre (DIA.NE control plus DIA.NE report):

- Windows 2000 Workstation or Windows XP Professional must be installed
- The most recent service packs including all the most recent patches must be installed

If, to divide the load, several modems are to be set up to answer incoming calls, Windows 2000 Server or Windows Server 2003 will be required!

If this is the case, please contact the GE Jenbacher Competence Centre!

If using the **modem** connection option:

- install the modem, including the connection to the telephone line

If using the **LAN** connection option:

- install the network card and configure the TCP/IP network between the DIA.NE WIN server and the DIA.NE WIN client

Optional

- Install an additional network for the shared use of DIA.NE report
- Set up an e-mail account to forward messages by e-mail/SMS

The customer must prepare the computer as follows for the installation of a separate computer for DIA.NE report:

- Windows NT 4.0, Windows 2000 Workstation or Windows XP must be installed
- The most recent service packs including all the most recent patches must be installed
- Network access to the RDT control centre must be provided (by installing the network card and configuring the network)

The software installation can be broken down into the following steps:

- Installing the software
- Configuring the software:

GE Proprietary Information: CONFIDENTIAL! Use or disclosure of data contained on this sheet is subject to the restrictions on the cover or on the first page.

- Creating the dial-in user
- If using the modem connection option: Configuring the dial-up services (Remote Access Services, RAS)
- Enabling the drive

2.6.5.1 Installing the DIA.NE control and DIA.NE report software

TIP!

To complete the following steps, users must have

LOCAL ADMINISTRATOR RIGHTS

The software is installed using the installation CD-ROM supplied. Insert the CD-ROM into the drive and run the "Set-up.exe" program.
Alternatively, all the installation software can be downloaded from the GE Jenbacher web server. Information on the links to be used can be obtained from the GE Jenbacher Competence Centre.

The installation procedure is interactive.

The installation option *RDT Control Centre* installs the DIA.NE control and DIA.NE report programs.

Choose the *Custom* installation option to install a separate computer for DIA.NE report. This installs the DIA.NE report program only.

You can cancel the installation at any time. You can also remove the software you have installed by uninstalling the relevant program with the *Add/Remove Programs* function in *Control Panel*.

Please note that, following dia.ne control installation, the password is initialised using '6020'.

2.6.5.2 Configuring DIA.NE control

- Run the *DIA.NE control* program
- Choose *Login* from the *File* menu to complete the login procedure.
  Default password: **6020**
  (Otherwise, editing the configuration is not permitted!)
- Choose *Configuration* from the *File* menu to adjust any settings. Choose *Notification* to configure automatic message forwarding by e-mail/text via e-mail/fax.

If you have any queries or problems, please contact the GE JenbacherCompetence Centre!

2.6.5.3 Configuring DIA.NE report

- Run *DIA.NE report*
- As soon as the program starts, a text box appears in which you have to type the path to the DIA.NE control database.
  - Database on local computer (RDT control centre):
  <LW>:\<Installation directory> z.B.: c:\program files\diane
  - database on a remote computer
  \\<work station name>\<release name> e.g.: \\computer-1\diane
- Choose *Configuration* from the *File* menu to adjust any settings. Choose *Display* to select the plants which are to be displayed.

GE Proprietary Information: CONFIDENTIAL! Use or disclosure of data contained on this sheet is subject to the restrictions on the cover or on the first page.

If you have any queries or problems, please contact the GE JenbacherCompetence Centre!

2.6.5.4 Creating the dial-up user

A special user must be created to allow the DIA.NE WIN server (DIA.NE message) to access the RDT control centre.

TIP!

To complete the following steps, users must have

LOCAL ADMINISTRATOR RIGHTS

Windows 2000

- Open the *Users and Passwords* dialogue box in Control Panel
- Click the *Add...* button and use the wizard to add a new user.
  User name: hermesrmc
  Full name: <any>
  Description: <any>
  Password: 041097
  Access Level: Standard User (Power User)
- In the *Users and Passwords* dialogue box, go to the *Advanced* form and click the *Advanced button* in the *Advanced User Management* section.
- Select *Users* and double-click the new user "hermesrmc" to open it.
- Set the user properties as follows:
  User must change password at next logon: DISABLED
  User Cannot Change Password: ENABLED
  Password never expires: ENABLED
  Account is disabled: DISABLED
  Account is locked out: DISABLED
- Confirm the dialogue and close all the dialogue boxes.

Windows XP

- Open the *User Accounts* dialogue box in Control Panel
- Click the *Create a new account* button and use the wizard to add a new user.
  Account name: hermesrmc
  Account Type: Limited
- Select the new user to create the password.
- Choose the *Create a password* menu command and specify the following password: 041097
- Confirm the dialogue and close all the dialogue boxes.
- Open the *Performance and Maintenance* dialogue box in Control Panel
- Open *Administrative Tools*
- Open *Computer Management*

GE Proprietary Information: CONFIDENTIAL! Use or disclosure of data contained on this sheet is subject to the restrictions on the cover or on the first page.

- Select the Users subgroup in *Local Users and Groups* and double-click the new user "hermesrmc" to open it.
- Go to the *Member Of* configuration dialogue box.
- Click the *Add...* button to add the user to the *Power Users* group (*Add... – Advanced – Find now*).
- Confirm the dialogue and close all the dialogue boxes.

TIP!

User names and passwords may only be changed in close consultation with GE Jenbacher**, as any unannounced change will result in data connection problems!**

2.6.5.5 Configuring the Remote Access Service (RAS) (modem option only)

By configuring an RAS server you allow remote computers (DIA.NE WIN servers) to access resources (file releases; DIA.NE control database) in the local computer.

TIP!

To complete the following steps, users must have

LOCAL ADMINISTRATOR RIGHTS

Windows 2000

- Open the *Network and Dial-up Connections* folder in Control Panel
- Select *Make New Connection* and use the wizard to create a new connection
- After the welcome message, select *Accept incoming connections* in the *Network Connection Type* dialogue box.
- In the next dialogue box, select the desired modem for incoming calls.
- In the *Incoming Virtual Private Connection* dialogue box, leave the *Do not allow virtual private connections* option unchanged.
- Select the user "hermesrmc" in the next dialogue box, *Allowed Users*.
  If this user does not appear in the selection, cancel the wizard and perform the previous step "Creating the dial-up user"!
- In the next dialogue box, "Networking Components", the following components must be enabled:
  - Internet Protocol (TCP/IP)
  - File and Printer Sharing for Microsoft Networks
  - Client for Microsoft Networks
- Select *Internet Protocol (TCP/IP)*, go to Properties and enable the following setting:

GE Proprietary Information: CONFIDENTIAL! Use or disclosure of data contained on this sheet is subject to the restrictions on the cover or on the first page.

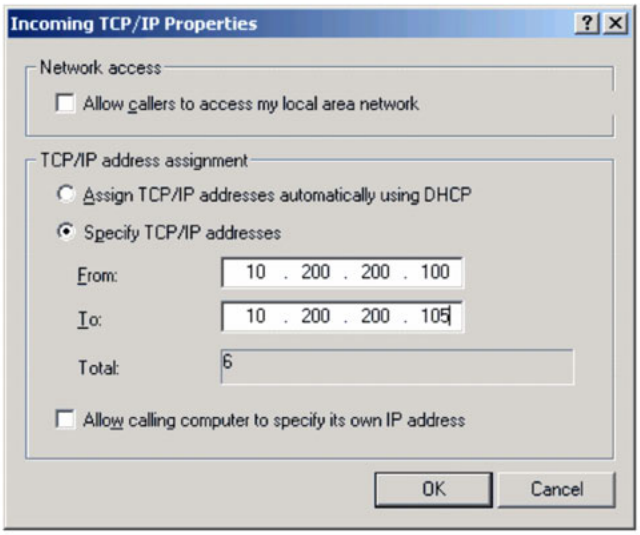

- In the last dialogue box, you can assign a name to the connection.

Windows XP

- Open the *Network Connections* folder in Control Panel
- Select *Create a new connection* and use the wizard to create a new connection
- After the welcome message, select *Set up an advanced connection* in the *Network Connection Type* dialogue box.
- In the *Advanced Connection Options* dialogue box, select *Accept incoming connections*.
- In the next dialogue box, select the desired modem for incoming calls.
- In the *Incoming Virtual Private Network (VPN) Connection* dialogue box, leave the *Do not allow virtual private connections* option unchanged.
- Select the user "hermesrmc" in the next dialogue box, *User Permissions*.
  If this user does not appear in the selection, cancel the wizard and perform the previous step "Creating the dial-up user"!
- In the next dialogue box, Networking Software, the following components must be enabled:
  - Internet Protocol (TCP/IP)
  - File and Printer Sharing for Microsoft Networks
  - Client for Microsoft Networks
- Select *Internet Protocol (TCP/IP)*, go to Properties and enable the following setting:

GE Proprietary Information: CONFIDENTIAL! Use or disclosure of data contained on this sheet is subject to the restrictions on the cover or on the first page.

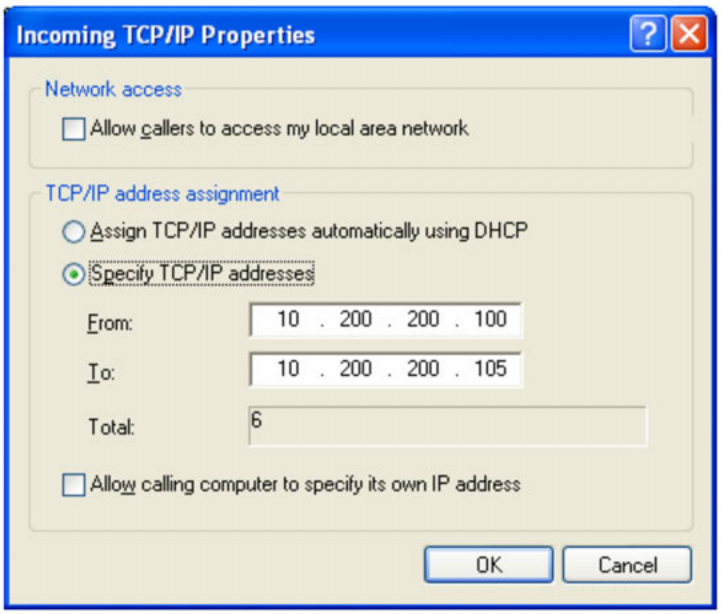

- Close the wizard.

As soon as the connection is created, the RAS service is active and accepts incoming modem connections.

2.6.5.6 Enabling the drive

To be able to access the drives of a workstation which is configured as an RAS server, you must enable the relevant drive or directory.

TIP!

To complete the following steps, users must have

LOCAL ADMINISTRATOR RIGHTS

Windows 2000

- Open Explorer and go to the folder containing the **DIA.NE control** program directory (default:(e.g. "C:\Program Files")
- Select the program folder and choose *Sharing* ... from the *File* menu.
- Select Share this folder in the dialogue box.
- Click the *Permissions* button to set the access rights.
- In the dialogue box that now appears, click the *Remove* button to remove the group "Everyone".
- Click the *Add*... button to add the DIA.NE dial-up user "hermesrmc".
- In *Permissions*, give the user the right to "Change".
- Confirm and close all dialogue boxes.

GE Proprietary Information: CONFIDENTIAL! Use or disclosure of data contained on this sheet is subject to the restrictions on the cover or on the first page.

Windows XP

- Open Explorer
- Choose *Folder Options...* from the *Tools* menu.
- Go to the *View* configuration dialogue box and disable the *Use simple file sharing (Recommended)* option in *Advanced Settings*.
- Close the dialogue box.
- Go to the folder containing the DIA.NE control program directory (default: "diane") (e.g. "C:\Program Files")
- Select the program folder and choose *Sharing and Security* ... from the *File* menu.
- Select *Share this folder* in the dialogue box.
- Click the *Permissions* button to set the access rights.
- In the dialogue box that now appears, click the *Remove* button to remove the group *Everyone*.
- Click the *Add...* button to add the DIA.NE dial-up user "hermesrmc". (*Add... – Advanced – Find now*)
- In *Permissions*, give the user the right to "Change".
- Confirm and close all dialogue boxes.

After you re-boot the PC, the DIA.NE WIN server (DIA.NE message) is authorised to access the DIA.NE control database.

2.6.5.7 Automatic start-up of DIA.NE control

To enable DIA.NE control to automatically start up when re-booting or logging off/on, there must be a shortcut to DIA.NE control in the All Programs - Startup folder.

2.6.5.8 Automatic login to the RDT control centre when re-booting

Follow the steps below to ensure you can log in automatically after the RDT control centre has been re-booted.

TIP!

To complete the following steps, users must have

LOCAL ADMINISTRATOR RIGHTS

Windows 2000

- Open the *Users and Passwords* folder in Control Panel
- Select the desired auto-login user from the user list.
  (To do this, the check box *Users must enter a user name and password to use this computer* must be enabled.)
- Disable the check box *Users must enter a user name and password to use this computer*.
- Click the *OK* button to close the dialogue box. Confirm the next password request by typing the password in twice.

GE Proprietary Information: CONFIDENTIAL! Use or disclosure of data contained on this sheet is subject to the restrictions on the cover or on the first page.

Windows XP

- Open the *Users and Passwords* folder in Control Panel
- Select the desired auto-login user from the user list.
  (To do this, the check box *Users must enter a user name and password to use this computer* must be enabled.)
- Disable the check box *Users must enter a user name and password to use this computer*.
- Click the *OK* button to close the dialogue box. Confirm the next password request by typing the password in twice.

2.6.5.9 Configuring the Windows Firewall (only Windows XP Service Pack 2 and higher)

- Start the "Windows Firewall" entry in the system control panel.

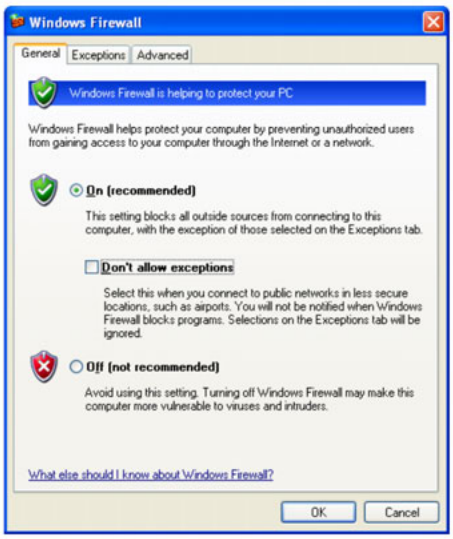

- Deactivate the "Don't allow exceptions" checkbox!
- Select the second tab, i.e. "Exceptions".

GE Proprietary Information: CONFIDENTIAL! Use or disclosure of data contained on this sheet is subject to the restrictions on the cover or on the first page.

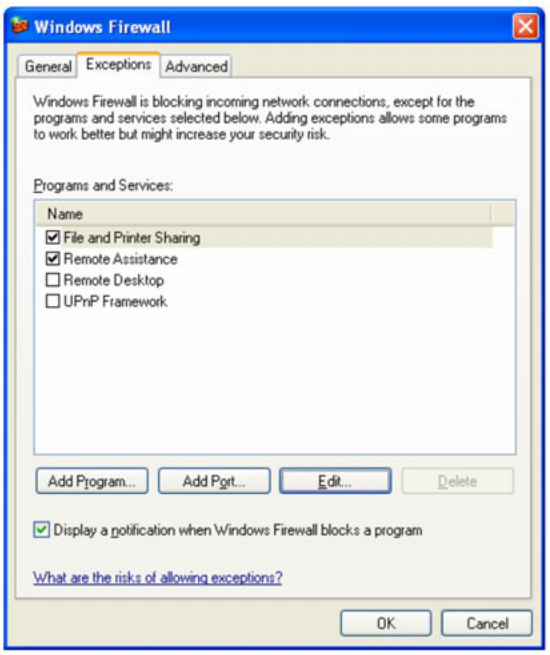

- Activate the "File and Printer Sharing" checkbox.
- Having selected this entry, select the "Edit" button and subsequently select the "Change scope ..." button in the dialogue box that follows.

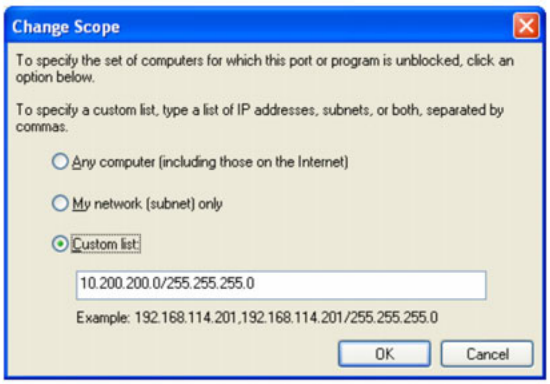

- Select the lowest entry, i.e. "Custom list:" and enter the "Incoming Connections" IP address range in the text field.

TIP!

This IP address range has been stated in section 2.6.5.5. **Configuring the Remote Access Service (RAS)** and is the default setting: 10.200.200.100 to 10.200.200.105.
The resulting network to be freed is: **10.200.200.0/255.255.255.0**

If another IP address range is used for the "Incoming Connections", you must use this address range.

- Close all open dialogue boxes by clicking on "OK".

GE Proprietary Information: CONFIDENTIAL! Use or disclosure of data contained on this sheet is subject to the restrictions on the cover or on the first page.

3 Connections

3.1 Modem

A telephone line via the public telephone system is used as the medium for connecting the plant to the customer.

The connection from the customer (client) to the DIA.NE WIN server (server) is established for the “remote control” application. The reverse applies in the case of the “automatic data and message transmission“ application.

By default, an analogue modem to the internationally approved V90/V92 standard is used in the plant.

Customers can use any commercially available analogue modem.

Maximum attainable connection speed: 56 KBit/s

An alternative option would be to fit the plant with an ISDN adapter or a GSM modem (dual band 900/1800).

3.2 Network (LAN)

An Ethernet network connection is used as the connection medium between the plant and the customer.

Cabling: Twisted Pair (TP) cables (at least CAT 5)

Maximum cable length:100 m (extension by means of additional on-site network components (repeater, hub, etc.) is possible)

Network protocol: TCP/IP

Maximum attainable connection speed: 100 MBit/s

3.3 Internet

A permanent Internet connection is used as the connection medium between the plant and the customer.

Because of the high risks involved in connecting the plant to the Internet, a security plan has been drawn up which satisfies the most stringent security criteria in the IT sector.

TIP!

A direction connection to the Internet is

not permitted under any circumstances due to the high safety risk (criminals, hackers, etc.) and will result in the loss of guarantee and warranty rights.
In this respect, see also the following Technical Instruction 2300-0006 (Security tips when connecting GE Jenbacher**Installations)**

GE Proprietary Information: CONFIDENTIAL! Use or disclosure of data contained on this sheet is subject to the restrictions on the cover or on the first page.

3.3.1 Components

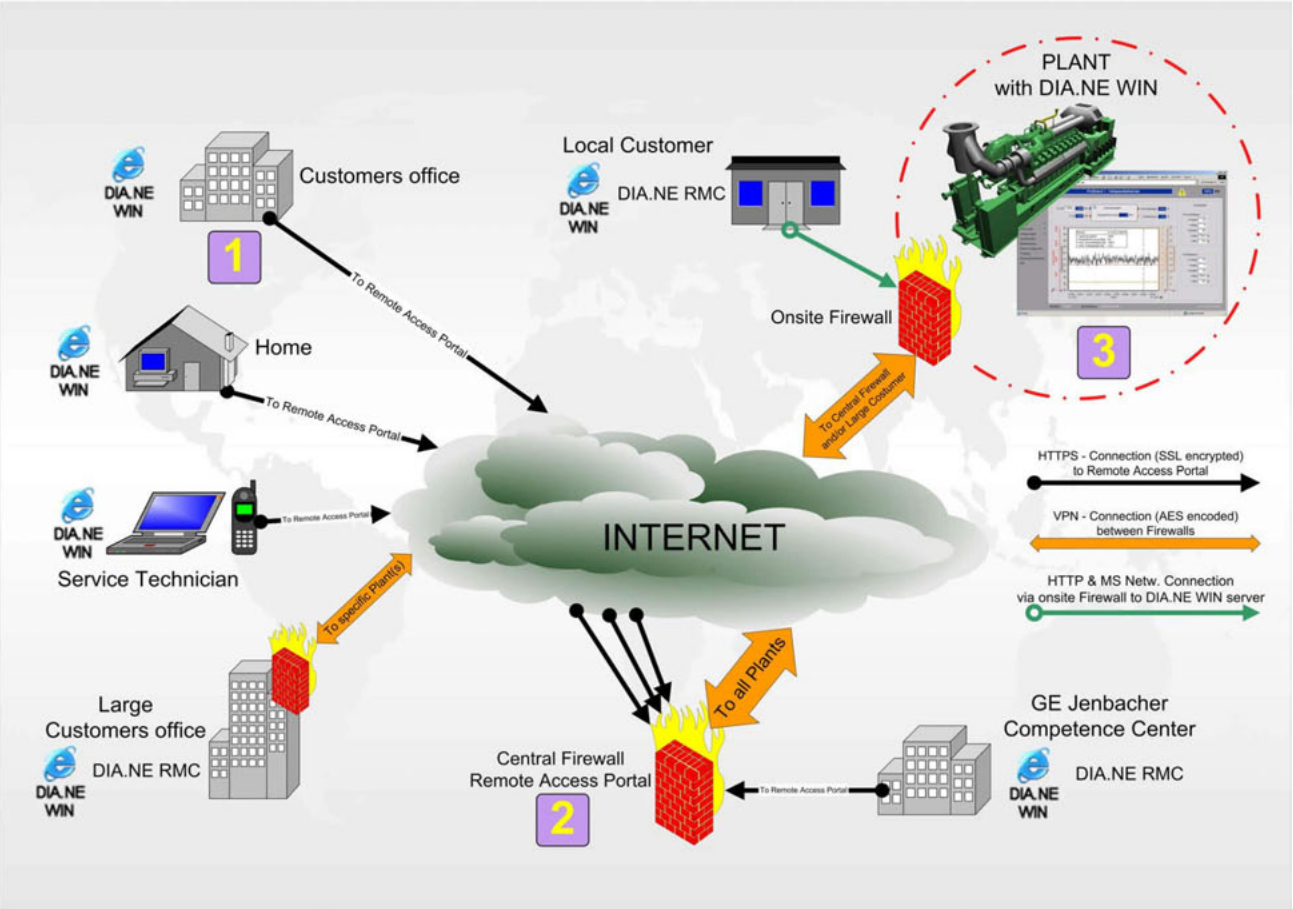

3.3.2 General conditions

This connection option requires a permanent Internet access point in the plant and additional security devices (firewall).

Descriptions of the exact scope of supply and the exact on-site services are available from the GE Jenbacher Sales Department or the GE JenbacherCompetence Centre.

- Internet access to the customer's computer
- DIA.NE XT/WIN: Installed DIA.NE WIN client
  (see Remote control (operating and monitoring) using DIA.NE WIN)
- DIA.NE: Installed software "Symantec pcANYWHERE"

GE Proprietary Information: CONFIDENTIAL! Use or disclosure of data contained on this sheet is subject to the restrictions on the cover or on the first page.

3.3.3 Preparation

3.3.3.1 Installing the Windows Update Pack (only Windows XP Service Pack 2 and higher)

Due to a security flaw in Service Pack 2 for Windows XP you must implement the following Microsoft Update (only once per computer).

http://www.microsoft.com/downloads/details.aspx?amp;displaylang=en&familyid=17D997D2-5034-4BBB-B74D-AD8430A1F7C8&displaylang=en

More information on this update can be found on the following website:
http://support.microsoft.com/default.aspx?scid=kb;[LN];884020

3.3.3.2 Configuring the Microsoft Internet Explorer security settings

Add the **hermes-plants.jenbacher.com** domain (internal domain for GE Jenbacher installations) to the "Trusted sites" of Microsoft Internet Explorer.

Follow the instructions in "Adding the website to the Trusted sites" of the DIA.NE WIN clients installation manual.

- Activate Microsoft Internet Explorer and select the "Internet Options..." menu item in the "Tools" menu.
- Then select the "Security" tab and subsequently the "Trusted Sites" symbol.

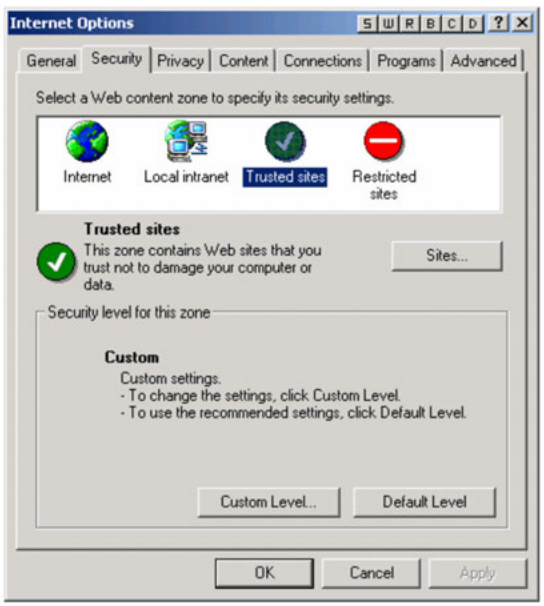

- Click the [Sites...] button to activate the dialogue box for adding websites to the Trusted sites zone.

GE Proprietary Information: CONFIDENTIAL! Use or disclosure of data contained on this sheet is subject to the restrictions on the cover or on the first page.

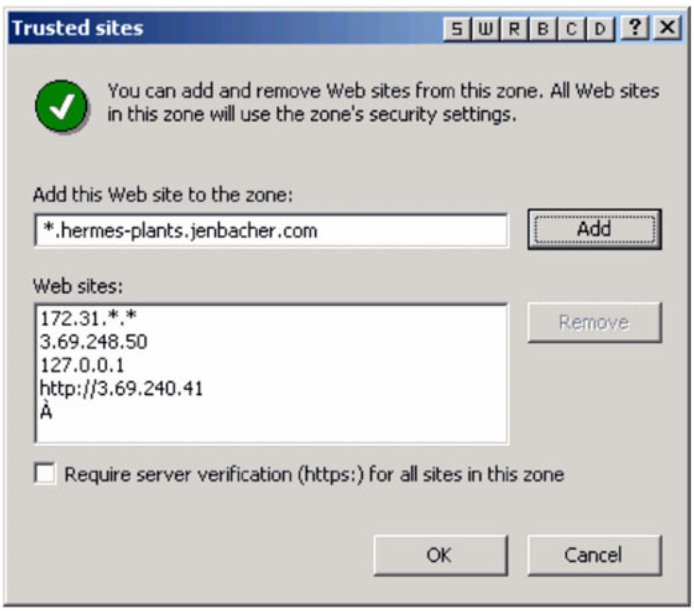

- Click [Add] to add the Jenbacher installations domain ***.hermes-plants.jenbacher.com** to the trusted sites.

  ATTENTION!
  The [Require server verification (https:) for all sites in this zone] option must be deactivated in order for the domain to be added!
  Make sure to add **"*."** to the beginning of the domain name.

3.3.4 Accessing the Jenbacher Remote Access Portal

Activate Microsoft Internet Explorer and select the Jenbacher Remote Access Portal:

http://hermes.jenbacher.com

GE Proprietary Information: CONFIDENTIAL! Use or disclosure of data contained on this sheet is subject to the restrictions on the cover or on the first page.

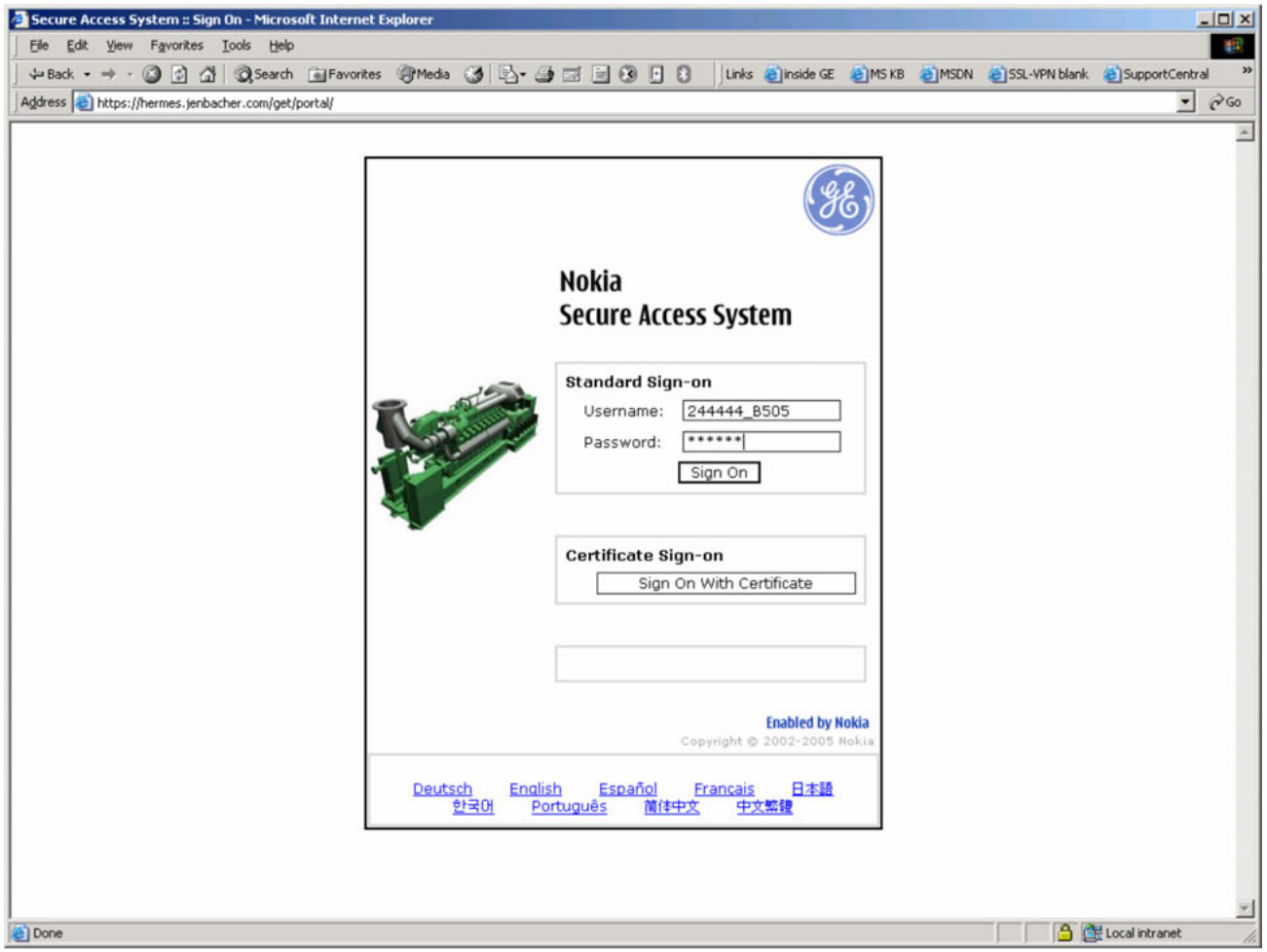

Login using the user name and password required for DIA.NE WIN Level 5 (Observer).

TIP!

Please contact the GE Jenbacher Competence Centre for user information for clients with DIA.NE installations and modem server.

If the login data are used for "Plant Access" (user name starts with the number 2 or 3), always add the installation number (UZ number, J number). When doing so, the 2 numbers must be separated using "_" (underscore) (e.g. 211111_A123).

If the login data are used for "Group Access" (user name starts with the number 5 or 6), always add the user name to the Group access number. When doing so, the 2 numbers must be separated using "_" (underscore) (e.g. 512345_54321).

Following the login, the following customer-specific interface appears:

GE Proprietary Information: CONFIDENTIAL! Use or disclosure of data contained on this sheet is subject to the restrictions on the cover or on the first page.

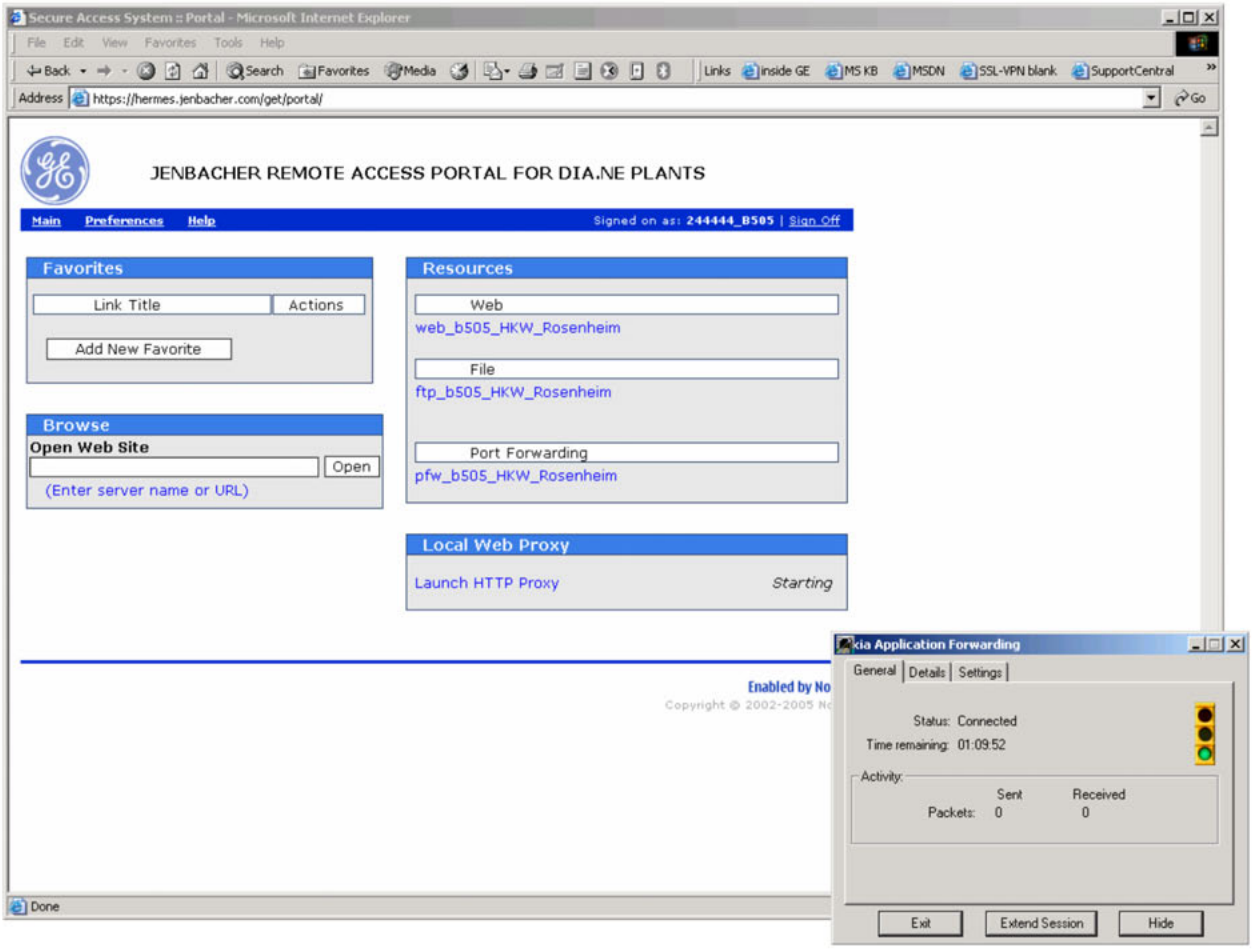

TIP!

When activating the Remote Access Portal for the first time, a dialogue box appears asking you to install an ActiveX component by NOKIA Inc. This request must be answered positively as failure to do so will result in a component required for accessing the installation (Nokia Application Forwarding) not being installed.

GE Proprietary Information: CONFIDENTIAL! Use or disclosure of data contained on this sheet is subject to the restrictions on the cover or on the first page.

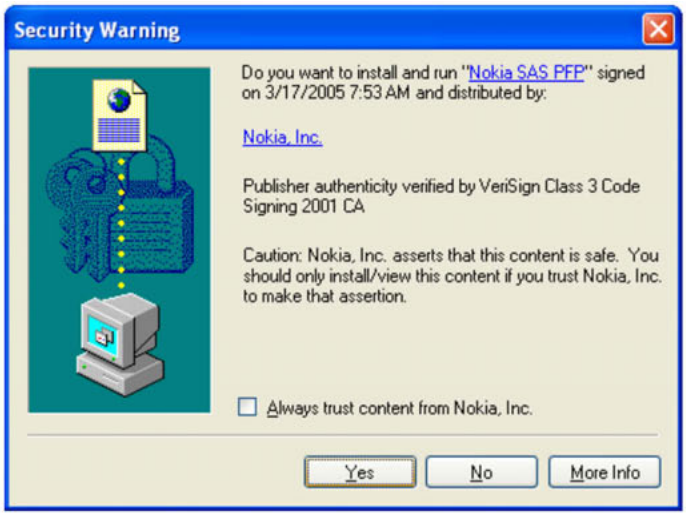

This programme will be activated automatically in future every time the Jenbacher Remote Access Portal is accessed and appears as a separate programme or menu bar icon.

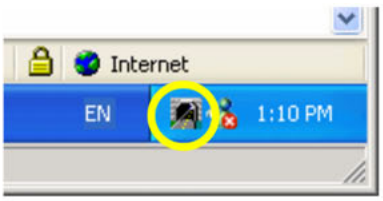

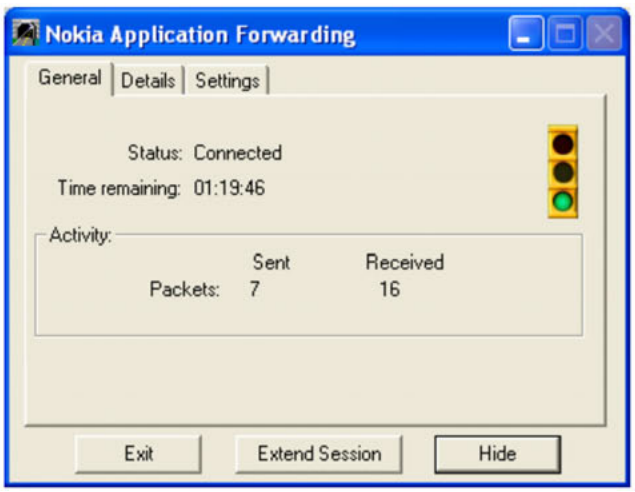

If this is not the case, you must activate the component manually via the portal link "Launch HTTP Proxy" (lower section "Local Web Proxy") before access is sought to Jenbacher installations for the first time.

TIP!

To safely end the access to the Jenbacher Remote Access Portal, we recommend using the "Sign off" menu item!

3.3.5 Access to DIA.NE XT/WIN installations

You can activate the following functions after you have logged into the Jenbacher Remote Access Portal:

GE Proprietary Information: CONFIDENTIAL! Use or disclosure of data contained on this sheet is subject to the restrictions on the cover or on the first page.

3.3.5.1 Starting the DIA.NE WIN application

Activate the desired link in the "Web" section (e.g. web_b505_HKW_Rosenheim)

The DIA.NE WIN application appears with the login page.

TIP!

All incoming and outgoing data are displayed in the "Activity" section of the "Nokia Application Forwarding" programme display.

You can return to the start-up page of the Remote Access Portal by:

- using the Previous function of Microsoft Internet Explorer until you arrive at the Remote Access Portal;
- using the "Extend Session" button of the Nokia Application Forwarding component and subsequently selecting the "Go To Portal" link in the Remote Access Portal.

3.3.5.2 Downloading files from the DIA.NE WIN server

Activate the link in the "File" section (e.g. ftp_b505_HKW_Rosenheim)

A login dialog box appears to which the user must login using his/her FTP user information.

A file browser interface now appears enabling the user to take several actions (upload, download, delete, ...); the access level is user-specific.

3.3.5.3 Starting Port Forwarding for remote maintenance of the DIA.NE WIN server using VNC software

Activating the link in the "Port Forwarding" section (e.g. pfw_a889_Agro_Care_45)

Now the following information on the activated connection possibilities appears:

GE Proprietary Information: CONFIDENTIAL! Use or disclosure of data contained on this sheet is subject to the restrictions on the cover or on the first page.

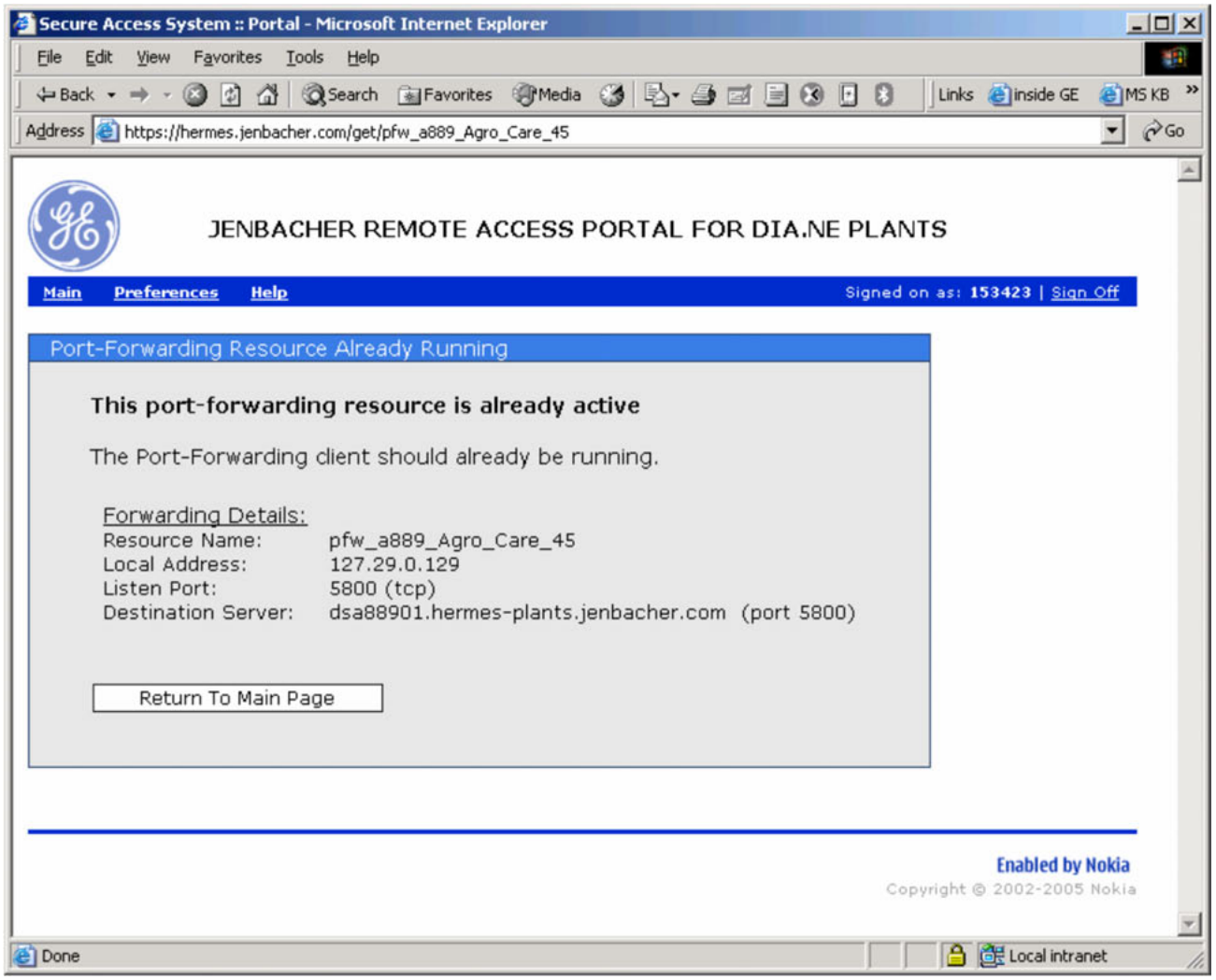

Resource Name:	Name of port connection
Local Address:	IP address used to access the remote computer.
Listen Port:	Port used to access the remote computer.
Destination Server:	Full remote computer name.

You must enter the "Destination Server" or the "Local Address" in the programmes (e.g. VNC) you use!

ATTENTION!

The VNC host service must not be active when Port Forwarding is started!

GE Proprietary Information: CONFIDENTIAL! Use or disclosure of data contained on this sheet is subject to the restrictions on the cover or on the first page.

TIP!

All incoming and outgoing data are displayed in the "Activity" section of the "Nokia Application Forwarding" programme display.
VNC requires 1 Port (TCP 5800) per connection.

3.3.6 Accessing DIA.NE installations

You can activate the following functions after you have logged into the Jenbacher Remote Access Portal:

3.3.6.1 Starting Port Forwarding for remote maintenance of the modem server using "Symantec pcANYWHERE" software

Activating the link in the "Port Forwarding" section (e.g. pfw_a889_Agro_Care_45)

Now the following information on the activated connection possibilities appears:

GE Proprietary Information: CONFIDENTIAL! Use or disclosure of data contained on this sheet is subject to the restrictions on the cover or on the first page.

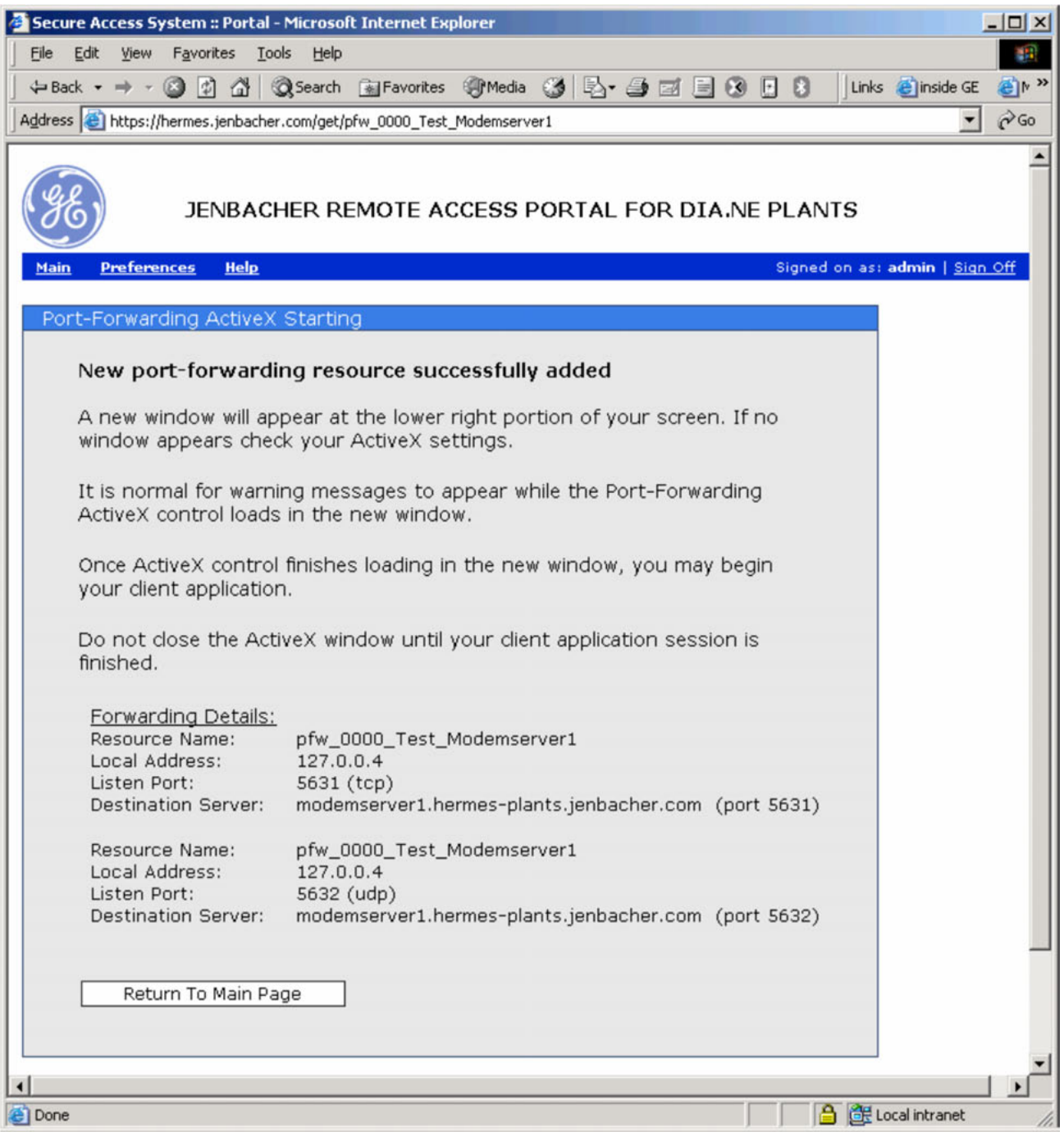

Resource Name:	Name of port connection
Local Address:	IP address used to access the remote computer.
Listen Port:	Port used to access the remote computer.
Destination Server:	Full remote computer name.

The Symantec pcANYWHERE Remote Control Object must be configured as follows:

GE Proprietary Information: CONFIDENTIAL! Use or disclosure of data contained on this sheet is subject to the restrictions on the cover or on the first page.

- Connection info – Device List: **TCP/IP**
- Settings – Network host to control or IP address: **„Destination Server“** or **„Local Address“**

ATTENTION!

The Symantec pcANYWHERE host mode must not be active when Port Forwarding is started!

TIP!

All incoming and outgoing data are displayed in the "Activity" section of the "Nokia Application Forwarding" programme display.

Because Symantec pcANYWHERE requires 2 ports per connection (TCP 5631 and UDP 5632), two entries are displayed per connection.

3.3.7 Troubleshooting, Tips & Tricks

3.3.7.1 Help system

The Jenbacher Remote Access Portal features an **Online help function**, which can be activated via:

https://hermes.jenbacher.com/_nsas.int_/help/en_US/wwhelp/wwhimpl/js/html/wwhelp.htm

or the **help link** on the **portal site**.

3.3.7.2 Error when activating the Nokia Application Forwarding component

- The Microsoft Internet Explorer security settings do not allow the ActiveX components to be downloaded/started.
  ⇨ Add the page : **hermes.jenbacher.com** to the "Trusted Sites" zone. (This zone allows activating ActiveX components for the DIA.NE WIN application).
  ⇨ Check all other security software possibly installed (pop-up blockers, firewall, ...)

GE Proprietary Information: CONFIDENTIAL! Use or disclosure of data contained on this sheet is subject to the restrictions on the cover or on the first page.

3.3.7.3 Error messages when activating the DIA.NE WIN application

- Check whether the Nokia Application Forwarding component has been activated successfully:

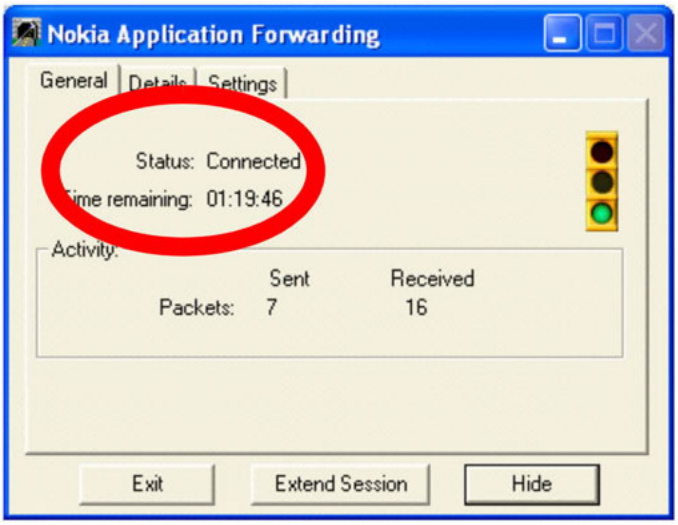

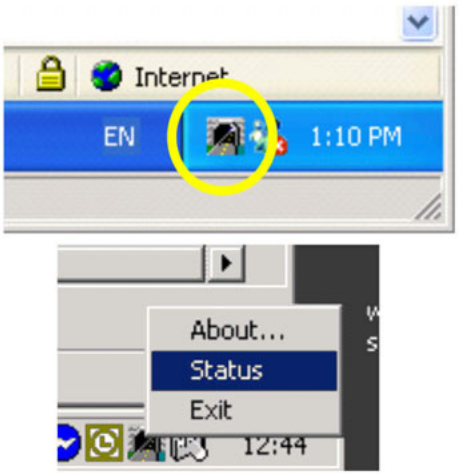

⇨ If the status is not "Connected", the maximum connection time was exceeded or an error occurred when establishing the connection.
The connection can be re-established, using the "Extend session" button.
If other error messages appear, please close Microsoft Internet Explorer and reboot.

- Check whether the *.hermes-plants.jenbacher.com domain is part of the "Trusted sites":

  If the setting is correct, the "Trusted sites" symbol must be displayed in the lower Microsoft Internet Explorer status bar whenever the DIA.NE WIN application is activated.

⇨ Check the setting according to the above section **Configuring the Microsoft Internet Explorer safety settings**

- If the "Trusted Sites" symbol is displayed correctly, please check whether the security settings for the "Trusted sites" zone comply with the DIA.NE WIN client installation manual.

3.3.7.4 VNC error message "unable to resolve host by name: ..."

This error message appears when the VNC server service has been activated on the client computer.
This service must be deactivated before Port Forwarding is started!

GE Proprietary Information: CONFIDENTIAL! Use or disclosure of data contained on this sheet is subject to the restrictions on the cover or on the first page.

3.3.7.5 Setting the user-specific default language

At the bottom of the login page, the user can directly change the language setting:

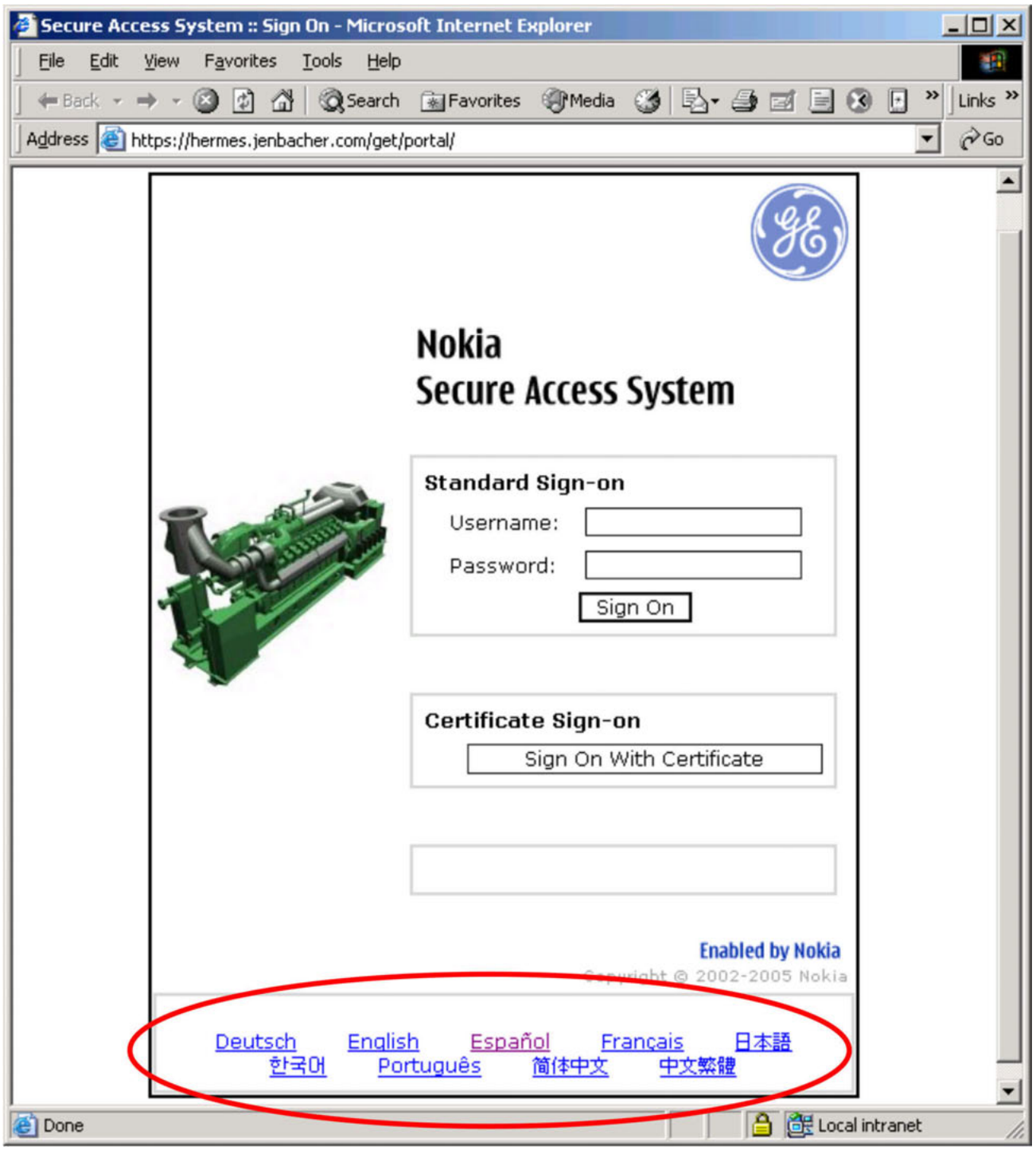

The default language can also be set in the Remote Access Portal, using the "Preferences" submenu on the main page.

GE Proprietary Information: CONFIDENTIAL! Use or disclosure of data contained on this sheet is subject to the restrictions on the cover or on the first page.

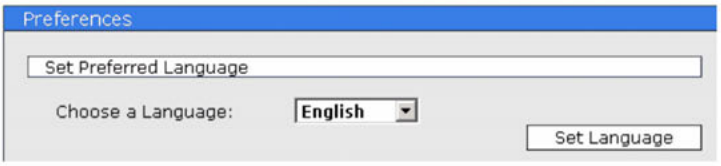

3.3.8 Additional information

3.3.8.1 Information on the Remote Access Portal used

Nokia Secure Access System: http://www.nokia.com/nokia/0,8764,43098,00.html

3.3.8.2 Information on the installation firewall used

Check Point VPN-1 EDGE: http://www.checkpoint.com/products/vpn-1_edge/index.htm

GE Proprietary Information: CONFIDENTIAL! Use or disclosure of data contained on this sheet is subject to the restrictions on the cover or on the first page.

General

When the installation is operational, the engine management system DIANE will not only control the engine but will also perform engine-failure management. The engine-failure management system checks all relevant system variables and will issue a warning or switch off the installation if certain set values are exceeded or underrun.

Remedying and resetting failures

If a failure results in the installation being switched off, the cause of the failure should be rectified first before the installation is started again. If a failure results in a warning being issued, the cause of the failure should be rectified first before the failure is reset.

Switch off the engine in accordance with Technical Instruction No. 1100-0105 and ensure that unauthorised persons cannot start the engine.

It is forbidden simply to reset a failure and then start the engine again!

Index

10	START CONDITIONS MISSING
12	OF AGGREGATE
13	OF THE UNIT
20	MOTOR WON'T START
30	MOTOR SAWING IN IDLE RUN (can't be synchronized)
40	MOTOR DOES NOT REACH FULL LOAD (while maintaining the guaranteed pollutant emissions)
50	MOTOR OR SYSTEM MOTOR/GENERATOR RUNS IRREGULARLY OR UNSTABLE WITH LOAD
51	MOTOR VIBRATES STRONGLY
52	MOTOR SHAKES (quick load fluctuations or great current and voltage fluctuations with little change of motor output)
53	ENGINE ROCKING
54	GENERATOR MOTOR ESCALATES (great current and voltage fluctuations at only little change in motor output)
55	MOTOR ARCHIEVES NOT STABLE CONDITION (output swings slowly up and down)
56	ENGINE STOPS (individual cylinders) OR HAS AN EXHAUST GAS TEMPERATURE DEVIATING FROM THE CENTRAL VALUE
57	PERIODIC FLUCTUATIONS IN PERFORMANCE
60	MOTOR KNOCKING
70	MISFIRING DETECTION RESPONDS, OR AT BR6 DEVIATION OF CYLINDER FLUE GAS TEMPERATURE TOO GREAT
90	OIL CONSUMPTION TOO HIGH
100	TURBOCHARGER DEFECT
101	COMPACTOR THROWING OIL
102	TURBINE THROWING OIL
103	TURBOCHARGER EFFICIENCY NOT OKAY (flue gas turbocharger no longer archieves required load pressure)

GE Proprietary Information: CONFIDENTIAL! Use or disclosure of data contained on this sheet is subject to the restrictions on the cover or on the first page.

104	COMPACTOR OR TURBINE WHEEL TOUCHED THE HOUSING
105	TURBOCHARGER VIBRATING
110	WATER IN LUBRICATION OIL
120	THE CONTRACTUALLY AGREED DEGREE OF EFFICIENCY IS NOT REACHED IN SPITE OF THE SALES TOLERANCE
1017	OIL PRESSURE LOW
1018	ENGINE OIL LEVEL LOW
1019	JACKET WATER PRESSURE LOW
1021	JACKET WATER TEMPERATURE HIGH
1022	OVERSPEED (RELAY)
1023	START UP FAILURE
1026	SHUTDOWN FAILURE
1027	FAILURE GAS TRAIN 1
1028	GAS PRESSURE LOW IN GAS TRAIN 1
1031	EMERGENCY STOP/SAFETY LOOP
1036	GENERATOR OVERLOAD/SHORT CIRCUIT
1038	GENERATOR REVERSE POWER
1039	SYNCHRONIZING FAILURE
1040	FUEL MIXTURE TEMPERATURE HIGH
1041	POWER SIGNAL MISSING
1042	POWER SIGNAL OVERLOAD
1043	ENGINE OIL TEMPERATURE HIGH
1044	CYLINDER EXHAUST GAS TEMPERATURE DEVIATION FROM AVERAGED VALUE
1047	MISFIRING FAILURE
1050	JACKET WATER PRESSURE HIGH
1051	ENGINE OIL LEVEL HIGH
1052	GAS PRE-ALARM
1053	GAS ALARM
1054	FIRE ALARM
1056	FAIL SAFE LOOP TRIPPED
1060	PRE-LUBE PRESSURE LOW
1064	OVERSPEED (RPS-CONTROL SYSTEM)
1073	MULTI MEASUREMENT DEVICE: GENERATOR OVERLOAD/SHORT CIRCUIT
1078	BOOST PRESSURE MEASURING SIGNAL FAILURE
1080	LEANOX CONTROL ALLOWED DEVIATION EXCEEDED
1083	CONTROL CARBURATOR DEFECTIVE
1090	ENGINE COOLING WATER PUMP FAILURE
1105	SPEED OF TEMPERATURE CHANGE MIXTURE TEMPERATURE MAXIMUM
1109	GENERATOR LOSS OF EXCITATION
1110	GENERATOR FREQUENCY TOO LOW
1111	GENERATOR FREQUENCY TOO HIGH

GE Proprietary Information: CONFIDENTIAL! Use or disclosure of data contained on this sheet is subject to the restrictions on the cover or on the first page.

1112	NEUTRAL CURRENT MAXIMUM
1113	GENERATOR POWER MEASURING SIGNAL FAILURE
1114	FUEL MIXTURE TEMPERATURE MEASURING SIGNAL FAILURE
1120	SPEED MEASURING SIGNAL FAILURE
1121	GENERATOR WINDING (L1) TEMPERATURE HIGH
1122	GENERATOR WINDING (L2) TEMPERATURE HIGH
1123	GENERATOR WINDING (L3) TEMPERATURE HIGH
1124	GENERATOR BEARING (A) TEMPERATURE HIGH
1125	GENERATOR BEARING (B) TEMPERATURE HIGH
1126	GENERATOR VOLTAGE LOW
1127	GENERATOR VOLTAGE HIGH
1129	FAILURE WITH AUXILIARIES
1132	DIFFERENTIAL PROTECTION
1140	MODULE INTERFACE PANEL CIRCUIT BREAKER TRIPPED
1143	VOLTAGE NEGATIVE SEQUENCE
1144	CURRENT NEGATIVE SEQUENCE
1145	JACKET WATER TEMPERATURE LOW
1148	STARTER BATTERY VOLTAGE LOW
1150	FAILURE SERIAL INTERFACE MODULE
1154	GENERATOR WINDING (L1) TEMPERATURE HIGH
1155	GENERATOR WINDING (L2) TEMPERATURE HIGH
1156	GENERATOR WINDING (L3) TEMPERATURE HIGH
1157	GENERATOR BEARING (A) TEMPERATURE HIGH
1158	GENERATOR BEARING (B) TEMPERATURE HIGH
1163	EXHAUST GAS TEMPERATURE BEFORE HEAT EXCHANGER MEASURING SIGNAL FAILURE
1164	EXHAUST GAS TEMPERATURE AFTER HEAT EXCHANGER MEASURING SIGNAL FAILURE
1168	REQUEST FOR MAINTENANCE
1171	TEMPERATURE BEFORE EXHAUST HEAT EXCHANGER HIGH
1172	TEMPERATURE AFTER EXHAUST HEAT EXCHANGER HIGH
1175	MAINS FAILURE
1189	RELEASE FROM SYNCHRONIZING MISSING
1192	ACTUATOR FAILURE
1216	BUS BAR VOLTAGE SENSOR FAILURE
1217	GENERATOR CB STATUS SIGNAL FAILURE
1218	GENERATOR CB OPENING FAILURE
1219	GENERATOR CB CLOSING FAILURE
1220	GENERATOR CB O-SIGNAL FAILURE
1221	GENERATOR CB 1-SIGNAL FAILURE
2082	PARAMETER(S) MISSING
2083	RPS (CONTROL SYSTEM) BATTERY FAILURE
2084	LEANOX ALGORITHM FAILURE

GE Proprietary Information: CONFIDENTIAL! Use or disclosure of data contained on this sheet is subject to the restrictions on the cover or on the first page.

2086	CARBURATOR POSITION MEASURING SIGNAL FAILURE
2097	DEVIATION POWER SETPOINT TO POWER PRESENT VALUE MAXIMUM
2101	JACKET WATER TEMPERATURE MEASURING SIGNAL FAILURE
2102	ENGINE OIL TEMPERATURE MEASURING SIGNAL FAILURE
2103	JACKET WATER PRESSURE MEASURING SIGNAL FAILURE
2104	JACKET WATER PRESSURE MEASURING SIGNAL FAILURE
2106	GENERATOR WINDING TEMPERATUREL1MEASURING SIGNAL FAILURE
2107	GENERATOR WINDING TEMPERATUREL2MEASURING SIGNAL FAILURE
2108	GENERATOR WINDING TEMPERATUREL3MEASURING SIGNAL FAILURE
2109	GENERATOR BEARING (A) TEMPERATUREMEASURING SIGNAL FAILURE
2110	GENERATOR BEARING (B) TEMPERATUREMEASURING SIGNAL FAILURE
2116	DUMP RADIATOR FAILURE
2117	INTERCOOLER WATER PRESSURE LOW
2118	MIXTURE COOLING WATER PUMP FAILURE
2120	ENGINE ROOM VENTILATION FAILURE
3003	MEASURING SIGNAL FAILURE
3155	MEASURING SIGNAL FAILURE CH4-CONTENT
3156	GAS PRESSURE MEASURING SIGNAL FAILURE
3158	O2 CONTENT MEASURING SIGNAL FAILURE
3159	GAS TEMPERATURE MEASURING SIGNAL FAILURE
3160	GAS VOLUME MEASURING SIGNAL FAILURE
3216	ENGINE OIL TEMPERATURE HIGH
3217	MISFIRING FAILURE
3218	OIL PRESSURE LOW
3219	EXCITATION VOLTAGE LOW
3220	JACKET WATER TEMPERATURE HIGH
3223	INTAKE AIR TEMPERATURE HIGH
3224	INTAKE AIR TEMPERATURE MEASURING SIGNAL FAILURE
3311	IN/OUT CHANNEL FAILURE
3402	JACKET WATER PRESSURE LOW
3406	JACKET WATER PRESSURE HIGH
3408	CYLINDER EXHAUST GAS TEMPERATURE POSITIVE DEVIATION FROM AVERAGE VALUE
3409	CYLINDER EXHAUST GAS TEMPERATURE NEGATIVE DEVIATION FROM AVERAGE VALUE
3411	FUEL MIXTURE TEMPERATURE HIGH
3497	Failure in the safety loop
3516	JACKET WATER TEMPERATURE HIGH
3517	COMMUNICATION TO DIA.NE WIN SERVER FAILED
3518	DATA REGISTRATION IN DIA.NE WIN SERVER FAILED
3526	HEATING WATER RETURN TEMPERATURE BEFORE ENGINE MEASURING SIGNAL FAILURE
3542	CYLINDER EXHAUST GAS TEMPERATUREMEASURING SIGNAL FAILURE
3561	OVERSPEED (RPS-CONTROL SYSTEM)

GE Proprietary Information: CONFIDENTIAL! Use or disclosure of data contained on this sheet is subject to the restrictions on the cover or on the first page.

3562	FUEL MIXTURE TEMPERATURE LOW
3564	FAILURE TURBOBYPASS VALVES
3565	GENERATOR POWER SETPOINT MEASURING SIGNAL FAILURE
3566	GENERATOR POWER FACTOR SETPOINT MEASURING SIGNAL FAILURE

10	**START CONDITIONS MISSING**		

12	**OF AGGREGATE**		
	e.g. min. gas pressure closed current loop not released	remove cause or complain at trader;remove loose contact or wire breakage, or replace defect monitoring device	

13	**OF THE UNIT**		
	no release through auxiliary operation	check which auxiliary operation is not running, e.g. HW-circulation pump or throughflow indicator and machine room vent flap open, gas warning installation etc.	

20	**MOTOR WON'T START**		
	Unsuitable Impco or Jenbacher mixer	mixer cone on Impco does not correspond to the current gas type;check whether the air slot at Jenbacher-mixer corresponds to used type of gas.	
	throttle flap won't open	check whether supply of the Heinzmann actuator driver is okay (amber LED in actuator be lit) the Heinzmann actuator driver is defective (red LED in driver lit) due to low voltage (<12 VDC); short circuit at the lines to the actuator or overtemperature (> 90°C); the pickup or the wiring from the pickup to the actuator or DIANE is defective; check whether the throttle flap or the control systems are stuck or do not properly function.	

GE Proprietary Information: CONFIDENTIAL! Use or disclosure of data contained on this sheet is subject to the restrictions on the cover or on the first page.

	Ignition defective Ignition spark missing	check following points (partly with stroboscope).mains supply of DISN-unit (relay defective or bad contact) pickup distance pickup connection defect at relay for the G-line DISN-unit defective wrong.One or several magnets with too little residual magnetism or magnet broken out	
	electrode distance too smallat all spark plugs	when changing plugs by sets to non - JENBACHER tested models, electrode distance is often too small, needs greater distance.	see maintenance
	throttle flap opens and closes quickly during start procedure	cwrong pick-up adjustment and quite often must be positioned closer to toothed wheel of starter according to adjustment instructions	
	gas pressure too low or too high or gas pressure fluctuations	gas pressure prior to gas pressure controller line does not correspond to listings in techn. scheme.	TI 1000-0300
	gas pressure in front of zero-pressure controller too high	1) higher values lead to excessive enriching of motor at start; 2) following adjustment of gas adm. pressure: adjust zero pressure controller so that after start of motor there is not speed breakdown (motor in this case too rich); if motor does not increase speed or increases too slow it is too lean; if motor is too rich, gradually turn zero pressure spindle out by 1 rot; if motors is too lean gradually turn spindle in by 1 rot.	TI 1000-0300
	wrong mixer adjustment	check programming of start opening	
	membrane of gas pressure controller defective	check membrane for ruptures	
	gas pressure controller stuck	check for easy movement	
	gas magnet valve is defective	check whether gas magnet valves open	

GE Proprietary Information: CONFIDENTIAL! Use or disclosure of data contained on this sheet is subject to the restrictions on the cover or on the first page.

	no inflammable mixture forms	check whether the slot at the mixer cone at the Jenbacher-mixer corresponds to the %o-position programmed at the DIANE; check whether the mixer cone moves, whether in the drive the spring for the catching is missing or the servo motor is defective (wire breakage or pot-drive)	
	start or idle run position of mixer or gas or air bypass flap incorrect	unsuited gas pressure controller causing gas pressure fluctuations,must be replaced, correction of programmed values to experimental values, or to an inflammable mixture via pollutant measuring kit; check whether the servo motor, the gas or air bypass flap is okay, or check drive for the feedback pot.	

30	**MOTOR SAWING IN IDLE RUN (can't be synchronized)**		
	the control linkage adjusted too progressively in idle run	correct adjustment and make sure that the flap can fully close.	
	unsuited mixer	mixer cones at Impco do not correspond to gas type or the air slot on Jenbacher-mixer, e.g., for depot gas, is too high, i.e., replace mixer cone, or reduce air slot (replace mixer or reduce shims under mixer head with new Jenbacher mixers)	
	ignition defective (cylinder missing)	replace	
	Ignition coildefective	replace	
	Heinzmann actuator driver not optimally adjusted	check the 0% position of the actuator	
	as a result of a pulsating draught in the exhaust flue while still warm	fit flap with a solenoid valve at the foot of the flue.	
	Heinzmann actuator defective (damaged)	replace	
	damaged joint cones of control line	replace joint cones	see maintenance
	throttle flap slightly bent following detonation in intake line and does not fully close anymore (idle speed partially too high)	remove throttle flap and align, check for easy functioning	see maintenance
	sluggish control lines, or throttle flap	relube the joints, or disassemble the throttle flap bearing and replace; replace bearing bushing.	see maintenance

GE Proprietary Information: CONFIDENTIAL! Use or disclosure of data contained on this sheet is subject to the restrictions on the cover or on the first page.

	Gas-pressure fluctuations Check the control rods (ball heads worn / sluggish) Mixture too lean / too rich Check speed controller setting	use manometer or water columnto measure where the gas pressure fluctuations appear, i.e., upstream of mixer, upstream of gas pressure controller or downstream of customergas admission controller; if controller unsuited, replace it, or call supplier (of admission pressure controller).	
	idle run position at gas or air bypass valve not optimally adjusted or no optimal programming in DIANE	better adjust idle run position by trial or program differently	
	speed controller not optimally adjusted		

40	**MOTOR DOES NOT REACH FULL LOAD (while maintaining the guaranteed pollutant emissions)**		
	throttle flap not fully opened,actuator stands at 100%	correction of controller linkage adjustment actuator - throttle flap.	see maintenance
	Part of the broken-off protective pipe in a manifold compensator is interrupting the flow of the exhaust gases	open the end cover and remove parts or replace compensator.Inspect turbine wheel for damage.	
	faulty insulation of exhaust collection line (insulation is completely or partiall worn down due to frequent dismantling or due to vibraiton	attach new insulation of thickness and efficiency as original one	
	leakage at the flange connections of flue gas line	seal the line (replace sealings, tighten screws correctly) if necessaryrework flanges	
	mixture transporting parts after compactor to throttle flap are not tight	seal off	
	Defective turbocharger (missing power and power loss)	check compactor shovel whether entry edges are damaged by foreign bodies or whether formation of deposits in the compactor housing reduces output or whether runnertouches housing (clean compactor housing and runner). Check the turbine wheel for damage and free run.	
	flue gas counter pressure too	measure the counter pressure after high turboloader exit;clean oxikate and waste heat boiler if necessary.	
	suction temperature too high(at >25°C) reduction can be used acc. to ISO 3046, except for other contractual agreement	check whether ambient air thermostat adjusted too high, the room venting not properly planned or other vent stages do not turn on	

GE Proprietary Information: CONFIDENTIAL! Use or disclosure of data contained on this sheet is subject to the restrictions on the cover or on the first page.

	output display wrong; ignition not properly adjusted, orcombustion misfires by e.g. too large electrode distance or failure of cylinders due to defectat ignition system (e.g. defect ignition coil)	check and correct error; make ignition check, measure ignition point, correct ignition adjustment and electrode distance, replace defective parts.	see maintenance
	contaminated air filter and hence great pressure loss before mixer	measure pressure loss clean or replace the filter	see maintenance
	combustion air ratio not okay (motor running too lean),	correct leanox adjustment at DIANE	
	mixture temperature too high in spite of correct mixture cooling water admission temp.	check mixture cooler, clean if necessary (mixture and water part) or glycol ratio too high (check).	TI 1000-0201, see maintenance

50	**MOTOR OR SYSTEM MOTOR/GENERATOR RUNS IRREGULARLY OR UNSTABLE WITH LOAD**		

51	**MOTOR VIBRATES STRONGLY**		
	pendulum damper not okay	check and replace if necessary	see maintenance
	failure of cylinder	check ignition, valves, check compression	see maintenance
	straps of motor add-on pieces not okay	check and remedy	
	motor adjustment not okay (ignition point)	check and adjust	

52	**MOTOR SHAKES (quick load fluctuations or great current and voltage fluctuations with little change of motor output)**		
	water, humidity in spark plug chamber (after washing motor)	dry spark plug chamber, clean plugs and connector.	
	combustion air ratio not okay (motor running too lean),	check and adjust using the pollutant measuring device	
	faulty ignition	check ignition system	see maintenance

53	**ENGINE ROCKING**		
	misfires (motor adjusted too lean)	check and adjust using the pollutant measuring device	

GE Proprietary Information: CONFIDENTIAL! Use or disclosure of data contained on this sheet is subject to the restrictions on the cover or on the first page.

54	**GENERATOR MOTOR ESCALATES (great current and voltage fluctuations at only little change in motor output)**		
	voltage controller at generator not okay cos phi controller not okay bad connection in circuit (cables)	adjust or repair check cables check that connector is firmly located	description - generator

55	**MOTOR ARCHIEVES NOT STABLE CONDITION (output swings slowly up and down)**		
	gas pressure fluctuating	check gas pressure controller, check admission pressure	TI 1000-0300
	quick fluctuation of the mixture temperature	check temp. in hot water circulation	Schematic diagram
	gas mixer not properly adjusted (e.g. l-characteristic not okay)	check, adjust	
	Non-optimal setting of Leanox-control parameters Check control rods (ball heads worn / sluggish) Check gas pressure Check power control Check gas-quality fluctuations (landfill gas, possibly sewage gas)	optimise the controller parameters at constant power setpoint	
	harmonization of leanoxcontroller - output control not functioning	harmonize time behavior leanox contr. to time behavior output control (decouple)	
	control linkages not okay (too large dead center/to progressively adjusted, etc.)	check, if necessary repair or replace	see maintenance

56	**ENGINE STOPS (individual cylinders) OR HAS AN EXHAUST GAS TEMPERATURE DEVIATING FROM THE CENTRAL VALUE**		
	defective ignition	check	see maintenance
	Pre-combustion chamber gas pressure set too low Check spark plugs, ignition coils and ignition system	Eleminate cause!	
	defective spark plug	check voltage demand, replace if necessary	see maintenance

57	**PERIODIC FLUCTUATIONS IN PERFORMANCE**		
	continual switching on and off of the ventilator(s)	Conversion to thermostatically-controlled, frequency-regulated ventilator	

GE Proprietary Information: CONFIDENTIAL! Use or disclosure of data contained on this sheet is subject to the restrictions on the cover or on the first page.

60	**MOTOR KNOCKING**		
	motor set too rich	Eleminate cause!	
	cooling water throughflow through the mixture cooler too low	Eleminate cause!	
	deposits in combustion chamber	check, remove deposits if any	
	are butane and air mixed into the fuel gas?	Eleminate cause!	
	methane number of fuel gas too low	take gas sample and have it analyzed	TI 1000-0300
	output limitation faulty	Eleminate cause!	
	mixture cooling water temperature too high	Eleminate cause!	Schematic diagram
	mixture temperature too high	check, remedy fault if any	
	ignition point not okay	determine ignition point and adjust toward "late"	
	combustion air ratio not okay	check, correct adjustment if necessary	Schematic diagram
	mixture cooler not okay	Eleminate cause!	
	too early ignition point is set	Eleminate cause!	

70	**MISFIRING DETECTION RESPONDS, OR AT BR6 DEVIATION OF CYLINDER FLUE GAS TEMPERATURE TOO GREAT**		
	crack at end of thread torque too high (plug tightened without torque wrench or with defective tool, or tightened too much)	replace spark plug and tightencorrectly with the right torque	see maintenance
	verdigris on ignition coil exit (connector to ignition cable)	clean carefully to make metal shiny	
	electrode distance too small (possibly only at site on one electrode)	correct electrode distance.	see maintenance
	pearl formation on electrodes due to overheating (e.g. knocking at times)	cannot be seen, metallic pearl may be caused by local melt-on between electrodes (remove with thickness gauge and check gap)	
	interferences at the ignition	check shield at the cables	
	spigot nut at the line to gas inlet valve is loose or the cutting ring is loose (flue gas temperature is higher at misfire)	retighten the screwing or seal	
	defect at cable loom between ignition box and ignition coils (scraping spots, ground contact, overheating and cracking at the insulation, loose contacts at the connections	in case of loose contacts retighten screws, in all other cases replace cable loom	
	missing or bad contact at highvoltage output of ignition coils or at ground contact or ignition coil	check contact screwing ground contact at the ignition coil and retighten the connection	

GE Proprietary Information: CONFIDENTIAL! Use or disclosure of data contained on this sheet is subject to the restrictions on the cover or on the first page.

	motor runs too lean due to defect of mixer (or of the air bypass flap)or due to leanox control	check motor adjustment withmeasuring kit, if too lean, remedycause	
	boost pressure transmitter defect or due to drift transmits too low value (to leanox controller or DIANE) causing too lean operation of motor	check boost pressure controller, i.e., compare boost pressure signal with manometer, in case of deviation replace transmitter	
	entry of dirt (shavings) or grease into the prechamber annulus, i.e. slits are partially blocked	Wash the pre-chamber with petrol and blow out.	
	spring in brass part of plug connector without voltage, or broken, bad contact to brass cap of plug (traces of smoke)	replace spark plug connector	
	defective output measurement (motor output does not correspond to measured output)	check the output measurement (compare counter measurement with output measurement)	
	motor misfires because it is set too lean or due to defective ignition	check using an exhaust emmissions analyser and correct if necessary	
	elastic seal ring inParker" valve of gas inlet valve destroyed	if ball valve is too leaky, the pressure at theParker" valve is too high and the seal ring is destroyed	
	ceramic body at the spark plug on top, or inner part of plug, is soiled with electr. conductive grease or similar and causes spark discharge in this area; plug shows in lower range of brass part a low-out, thus spark discharge to plug shell is created	clean plug and connector or replace.check for proper seat of dust cap on top of the valve hoodBlow-out is usually very small, onlyvery small grey point is visible on spark passage. replace plug suppresser	
	breakage of ignition cable interior at the soldering at the brass part of the plug connector or at the bend of the rubber bush	frequent pulling of the plug connector at the cable, the cable ruptures are not visible, replace plug and cable	
	misfiring due to too low ignition voltage offer (defect at the ignition coil)	check the coil at motor standstill with ignition voltage tester	
	consumption spark plug shows abnormal spark appearance or flashover at bottom of plug on oscilloscope	plug daubed at the end side with electrically conductive gliding agent (when sprayed with Ultra-Therm not covered or too much spray used which dropped on electrodes when hot)	TI 1400-0111
	too large ignition voltage demand due to large electrode distance	re-adjustment of the electrode gap with the special tool, or replacement of the sparking plugs	see maintenance
	ball sticks to seat of gas inlet valve	increase prechamber gas difference pressure; clean (wash valve, i.e. clean from lubricating oil which deposits in valve especially during start-up phase)	
	wrong adjustment of misfire detector	Eleminate cause!	

GE Proprietary Information: CONFIDENTIAL! Use or disclosure of data contained on this sheet is subject to the restrictions on the cover or on the first page.

	quick generator output change	Eleminate cause!	
	spark plug shows blue or brown discoloring at steel part and shows electrode	spark plug was not tightened sufficiently and overheated	
	loose brass cap (traces of smoke on top of ceramic body)	tighten cap; if threading underneath of brass cap is loose, replace spark plug	see maintenance

90	**OIL CONSUMPTION TOO HIGH**		
	turboloader throwing oil	see point 0100	
	carbonisation of the fire land through excessive idling or nonobservation of the limit values for used oil (TI 1000-0099B) leads to carbonisation of hard deposits on the piston top land. The upper rim pushes oil in front of it, more oil is burnt and the 1st ring receives too little oil and wears very repidly. (Ring carries to full height within 1000 op. hrs., darfk, cruty deposit in piston groove Piston runs crooked due to connecting rod parallelity tolerances being exceeded; similar effects to above with the same symptoms and can be clearly seen at the piston skirt on the pressure side, as well as at the fire land above the level of the bolts (one side clear, the other with hard oil carbonisation) (reduced gas access to 1st piston ring).	remove piston and clean replace first ring and break in motor	

100	**TURBOCHARGER DEFECT**		

101	**COMPACTOR THROWING OIL**		
	air filter resistance too great (dirty filter)	clean air filter, if required replace	see maintenance

102	**TURBINE THROWING OIL**		
	oil sealing at turbine is defective	check and repair	
	axial or radial play of runner	measure, if exceeding admissible too great values repair or replace	

GE Proprietary Information: CONFIDENTIAL! Use or disclosure of data contained on this sheet is subject to the restrictions on the cover or on the first page.

103	**TURBOCHARGER EFFICIENCY NOT OKAY (flue gas turbocharger no longer archieves required load pressure)**		
	entrance shovels of compactorare defective or damaged	check, search cause (foreign body?) and replace FGTL if necessary	
	turbine shovels damaged	check, search cause (foreign body?) and replace FGTL if necessary	

104	**COMPACTOR OR TURBINE WHEEL TOUCHED THE HOUSING**		
	defective axial sealing -axial play too great	measure, if exceeding admissible too great values repair or replace	

105	**TURBOCHARGER VIBRATING**		
	turbine shovels (compactor shovels) defective (unbalanced)	replace wheel or turboloader	

110	**WATER IN LUBRICATION OIL**		
	leaky O-rings at the cylinder liner	replace O-rings	
	leaky O-rings at the prechambers	replace O-rings	
	craks or sinkholes at upper side of cylinder head between water storage and oil storage	check, replace if necessary	
	leaks at oil cooler	check and replace if necessary	

120	**THE CONTRACTUALLY AGREED DEGREE OF EFFICIENCY IS NOT REACHED IN SPITE OF THE SALES TOLERANCE**		
	induction vacuum before compactor too high due to dirty air filter	clean air filter	see maintenance
	flue gas counter pressure too high due to dirty waste heat boiler	clean boiler	
	on site the sum of border conditions is strongly negative in order to reach an optimal efficiency (e.g. heating value of depot gas extremely low, induction temperature >25°C, air pressure <1000 mbar)	measure values exactly and convert to standard condition according to ISO 3046	

GE Proprietary Information: CONFIDENTIAL! Use or disclosure of data contained on this sheet is subject to the restrictions on the cover or on the first page.

1017	OIL PRESSURE LOW		
	leak in the oil lines or the oilpan clogged oil cooler, oil filter or oil line uncontrolled switching off (killing) of engine too low speed oil level below "min. oil level" defective oil pressure transmitter engine switch-off by closed current loop (defect monitoring) wrong adjustment of fringe value	Eleminate cause!	

1018	ENGINE OIL LEVEL LOW		
	leakage in oil lines or oilpan defective solenoid valve "fill oil" (won't open) defective oil level sensor or evaluation device empty fresh oil tank slide at oil pump station is closed three-way cock in wrong position oil level measurerer not adjusted (with analog measuring) "sag" in pressure-equalization line (venting) wrong adjustment of fringe value	Eleminate cause!	

1019	JACKET WATER PRESSURE LOW		
	leak in cooling water system defective pressure transmitter of cooling water leaking safety valve damaged membrane in pressure wrong adjustment of fringe value crack in inlet or outlet duct of cylinder head	Eleminate cause!	

GE Proprietary Information: CONFIDENTIAL! Use or disclosure of data contained on this sheet is subject to the restrictions on the cover or on the first page.

1021	**JACKET WATER TEMPERATURE HIGH**		
	hot water feedback temp. too high cooler clogged, calcified, dirty return temperature control incorrectly adjusted emergency cooler clogged calcified, dirty fresh water missing cool. wat. pump defect defect. cool. water temp. transmission heat circulation pump defective heat circ. slide, fresh - water slide closed ambient temp. too high (with table cooler) throughflow amount too small (primary/secondary) follow-up heating when shut off water circulations not vented motor output too high glycool amount too high defective short-circuit thermostat wrong adjustment of fringe value water circulation not vented	Eleminate cause!	

1022	**OVERSPEED (RELAY)**		
	throttle flap won't open	Eleminate cause!	

1023	**START UP FAILURE**		
	3 unsuccessful starting attempts no gas defective ignition wrong gas mixer valve start position wrong adjustment of gas pressure safety automation in motor terminal strip is off starter won't start	Eleminate cause!	

1026	**SHUTDOWN FAILURE**		
	leaky or defective gas valves speed limit wrongly adjusted	Eleminate cause!	

GE Proprietary Information: CONFIDENTIAL! Use or disclosure of data contained on this sheet is subject to the restrictions on the cover or on the first page.

1027	**FAILURE GAS TRAIN 1**		
	leaky gas valves gas valve closed defective gas tightness coantroller clogged gas filter too low gas pressure dirty filter in supply line to tightness controller condensate in the supply line to tightness controller vibrations of tightness controller device	Eleminate cause!	TI 1000-0300

1028	**GAS PRESSURE LOW IN GAS TRAIN 1**		
	gas valve closed wrong adjustment or defective gas pressure controller missing gas supply (line breakage) pressure fluctuations by other user defective pressure switch no gas present (sewer gas) wire breakage to PLC dirty filter in supply line	Eleminate cause!	TI 1000-0300

1031	**EMERGENCY STOP/SAFETY LOOP**		
	emergency off button enabled wire breakage safety loop belt alarm --> when in emergency off chain gas alarm --> linked	Eleminate cause!	

1036	**GENERATOR OVERLOAD/SHORT CIRCUIT**		
	wrong adjustment or defective output controller overload in isolated operation short circuit wrong adjustment or defective output switch wrong adjustment or defective cos-phi controller wire breakage to PLC unbalanced load	Eleminate cause!	

GE Proprietary Information: CONFIDENTIAL! Use or disclosure of data contained on this sheet is subject to the restrictions on the cover or on the first page.

1038	**GENERATOR REVERSE POWER**		
	generator power switch does not open 10% power switch point wrong adjustment output reduced too quickly defective output measurement (only variant with reverse current relay) wrong adjustment rev. current relay or defective DIANE wrong adjustment or defective defective current transmitter wire breakage to PLC short circuit or wire breakage in 20 mA current loop of output measuring transducer ignition failure (signal pickup/DISN failure)	Eleminate cause!	

1039	**SYNCHRONIZING FAILURE**		
	speed controller hunting throttle control rod loose synchronising unit faulty engine rough (ignition coil faulty) voltage balance circuit faulty engine idles too long gas pressure oscillating	Eleminate cause!	

1040	**FUEL MIXTURE TEMPERATURE HIGH**		
	defective mixture cooling pump mixture cooler clogged, calcified, dirty hot water feedback temp. too high fresh water exchanger is clogged, calcified, dirty defective PT100 water circulation of mixture cooling not vented cooling water amount of mixture too low wrong adjustment of fringe value	Eleminate cause!	

GE Proprietary Information: CONFIDENTIAL! Use or disclosure of data contained on this sheet is subject to the restrictions on the cover or on the first page.

1041	POWER SIGNAL MISSING		
	wire breakage or short circuit of output signal wire breakage or short circuit of current transducer output measuring transducer defect defective current transducer defective output controller power setpoint too small (<10% Pnenn)	Eleminate cause!	

1042	POWER SIGNAL OVERLOAD		
	overload isolated operation output controller wrong adjusted or defective input of wrong measuring transducer or wrong output switch point defective output measuring transducer defective current transducer defective output controller	Eleminate cause!	

1043	ENGINE OIL TEMPERATURE HIGH		
	oil cooler clogged, dirty hot water feedback temp. is too high defective cooling water pump cooling water heat exchanger chocked dirty return remperature control incorrectly adjusted fresh water heat exchanger chocked, dirty table cooler too small ambient temp. to high (with table cooler) throughflow amount too low (primary/second.) limit value adjusted incorrectly	Eleminate cause!	

1044	CYLINDER EXHAUST GAS TEMPERATURE DEVIATION FROM AVERAGED VALUE		
	pre chamber gas valve faulty Ignition breakdown (glow plug, ignition coil) thermoelement defect limit value adjusted incorrectly cylinder knocks	Eleminate cause!	

GE Proprietary Information: CONFIDENTIAL! Use or disclosure of data contained on this sheet is subject to the restrictions on the cover or on the first page.

1047	MISFIRING FAILURE		
	Wrong distance of electrodes Wrong A/F ration Failure in ignition system (sparkovers, break of insulators) Too late ignition point Misvire detection incorrectly adjusted or defective Ignition defective Ignition coil defective	Eleminate cause!	

1050	JACKET WATER PRESSURE HIGH		
	slide for filling cooling water is open leaking plug sleeve defective cooling water pressure transmitter defect. cool. water temp. measurement and overheated motor pressure expansion container too small filling pressure too high wrong adjustment of fringe value	Eleminate cause!	

1051	ENGINE OIL LEVEL HIGH		
	defective solenoid valve "fill oil" defective oil level sensor or evaluator oil level measurerer is not adjusted (with analog measuring) wrong adjustment of fringe value	Eleminate cause!	

1052	GAS PRE-ALARM		
	leak in gas line system solvent, cleaning agent in container transmitter defective wrong adjustment or defective evaluator	Eleminate cause!	

GE Proprietary Information: CONFIDENTIAL! Use or disclosure of data contained on this sheet is subject to the restrictions on the cover or on the first page.

1053	**GAS ALARM**		
	leak in gas line system solvent, cleaning agent in container transmitter defective wrong adjustment or defective evaluator	Eleminate cause!	

1054	**FIRE ALARM**		
	fire smoke solvent, cleaning agent in container transmitter defect evaluator defect	Eleminate cause!	

1056	**FAIL SAFE LOOP TRIPPED**		
	24V supply missing safety loop monitoring tripped emergency stop	Eleminate cause!	

1060	**PRE-LUBE PRESSURE LOW**		
	Air pocket in oil pipe work Motor circuit breaker Prelubricating pump faulty Oil temperature too low Oil pressure analogue sensor faulty	Eleminate cause!	

1064	**OVERSPEED (RPS-CONTROL SYSTEM)**		
	speed overshoot afte mains failure speed limit wrongly adjusted	Eleminate cause!	

GE Proprietary Information: CONFIDENTIAL! Use or disclosure of data contained on this sheet is subject to the restrictions on the cover or on the first page.

1073	MULTI MEASUREMENT DEVICE: GENERATOR OVERLOAD/SHORT CIRCUIT		
	wrong adjustment or defective output controller overload in isolated operation short circuit wrong adjustment or defective output switch wrong adjustment or defective cos-phi controller wire breakage to PLC unbalanced load	Eleminate cause!	

1078	BOOST PRESSURE MEASURING SIGNAL FAILURE		
	24V supply to boost pressure transducer faulty transducer cables faulty transducer range exceeded tranduce faulty analogue input card faulty	secure interfaces repair cables wrong transducer change transducer	

1080	LEANOX CONTROL ALLOWED DEVIATION EXCEEDED		
	measuring signal fault - actual power Measuring signal fault - mixture Temperature Measuring signal fault - boost pressure Gas mixer control defective	see fault No. 1113 see fault No. 1114 see fault No. 1078 see fault No. 1083	

1083	CONTROL CARBURATOR DEFECTIVE		
	24V supply failure for DM455 Gasmixer cable fault Gasmixer siezed 24V supply failure for gasmixer position feedback Faulty position-feedback plate Position feedback cable faulty	Check power supply in 24V interface and at the DM455 board Correct wiring Smooth running of gas mixer Exchange fuse and board	TI 1000-0300

GE Proprietary Information: CONFIDENTIAL! Use or disclosure of data contained on this sheet is subject to the restrictions on the cover or on the first page.

1090	ENGINE COOLING WATER PUMP FAILURE		
	Faulty water pump Cable to PLC defect Engine emergency circuit breaker set incorrectly Incorrectly set minimum current collection control relay	Check water pump and electric motor. Compare the engine emergency circuit breaker setting and the current relay setting with the actual current collection of the motor.	

1105	SPEED OF TEMPERATURE CHANGE MIXTURE TEMPERATURE MAXIMUM		
		Inform the GE-JENBACHER customer service department	

1109	GENERATOR LOSS OF EXCITATION		
	Voltage controller faulty Excitation voltage protection has been tripped Faulty rotating diodes defective cos-phi controller	change controller Close protection switch Check/replace the diodes	

1110	GENERATOR FREQUENCY TOO LOW		
	Speed governor has been set incorrectly Speed governor is out of order Error in speed governor circuit	Eleminate cause!	

1111	GENERATOR FREQUENCY TOO HIGH		
	Speed governor has been set incorrectly Speed governor is out of order Error in speed governor circuit	Eleminate cause!	

1112	NEUTRAL CURRENT MAXIMUM		
	Out-of-balance load in isolated operation. Non-symmetrical mains supply causing compensating currents. Inadmissible 3rd (upper) harmonic wave (150 Hz). Earth fault	Eleminate cause!	

GE Proprietary Information: CONFIDENTIAL! Use or disclosure of data contained on this sheet is subject to the restrictions on the cover or on the first page.

1113	GENERATOR POWER MEASURING SIGNAL FAILURE		
	Mult - transducer faulty Cables for multi-transducer faulty Analogue input card faulty wrong adjustment of fringe value	Change multi-transducer Check cables Change analogue input card	

1114	FUEL MIXTURE TEMPERATURE MEASURING SIGNAL FAILURE		
	PT100 faulty PT100 cables faulty Analogue input card faulty	change PT100 Check cables	

1120	SPEED MEASURING SIGNAL FAILURE		
	Speed pick-up wrongly adjusted 24V supply failure to pickup Pickup cable fault	Gap from 1 revolution of gear rim. Check interface Check cable	

1121	GENERATOR WINDING (L1) TEMPERATURE HIGH		
	generator overload unbalanced load defective generator wrong cos-phi PT100 sensore defective ambient temperature too high wrong adjustment of fringe value	Check main switch for trace heating system in accordance with manufacturer's instructions Check the measuring sequence of the response switch in accordance with the wiring diagram and manufacturer's instructions for the installed components	

1122	GENERATOR WINDING (L2) TEMPERATURE HIGH		
	generator overload unbalanced load defective generator wrong cos-phi PT100 sensore defective ambient temperature too high wrong adjustment of fringe value	Check main switch for trace heating system in accordance with manufacturer's instructions Check the measuring sequence of the response switch in accordance with the wiring diagram and manufacturer's instructions for the installed components	

GE Proprietary Information: CONFIDENTIAL! Use or disclosure of data contained on this sheet is subject to the restrictions on the cover or on the first page.

1123	GENERATOR WINDING (L3) TEMPERATURE HIGH		
	generator overload unbalanced load defective generator wrong cos-phi PT100 sensore defective ambient temperature too high wrong adjustment of fringe value	Check main switch for trace heating system in accordance with manufacturer's instructions Check the measuring sequence of the response switch in accordance with the wiring diagram and manufacturer's instructions for the installed components	

1124	GENERATOR BEARING (A) TEMPERATURE HIGH		
	bearing defective PT100 sensor defective cable break to PLC ambient temperature too high wrong adjustment of fringe value	Eleminate cause!	

1125	GENERATOR BEARING (B) TEMPERATURE HIGH		
	bearing defective PT100 sensor defective cable break to PLC ambient temperature too high wrong adjustment of fringe value	Eleminate cause!	

1126	GENERATOR VOLTAGE LOW		
	voltage controller fault Excitation voltage protection has been tripped Blown fuse	change controller Close protection switch Check fuse	

1127	GENERATOR VOLTAGE HIGH		
	voltage controller fault voltage controller measurement circuit is disturbed	change controller Check measurement circuit	

GE Proprietary Information: CONFIDENTIAL! Use or disclosure of data contained on this sheet is subject to the restrictions on the cover or on the first page.

1129	FAILURE WITH AUXILIARIES		
	supply circuit breaker tripped by overload short circuit	check wiring check adjustment circuit breaker	

1132	DIFFERENTIAL PROTECTION		
	stator earth fault Winding fault	Eleminate cause!	

1140	MODULE INTERFACE PANEL CIRCUIT BREAKER TRIPPED		
	Circuit breaker or engine circuit breaker in module control cabinet has tripped Power circuit breaker or engine circuit breaker in module control cabinet is off Wire breakage Loose terminal on SPC input card Loose terminal on circuit breaker's or engine circuit breaker's auxiliary contacts	Eleminate cause!	

1143	VOLTAGE NEGATIVE SEQUENCE		
	fuse blown in measurement circuit Generator earth fault Generator winding fault Armature fault Mains voltage assymetry	check fuses Fault checks	

1144	CURRENT NEGATIVE SEQUENCE		
	current transformer circuit interuption Mains voltage assymetry Unbalanced load in Island operation Earth fault	check CT circuits Check faults	

GE Proprietary Information: CONFIDENTIAL! Use or disclosure of data contained on this sheet is subject to the restrictions on the cover or on the first page.

1145	**JACKET WATER TEMPERATURE LOW**		
	failure cooling water preheating return temperature control incorrectly adjusted defective cooling water temp. transmitter heat-up process not finished wrong adjustment of fringe value	Eleminate cause!	

1148	**STARTER BATTERY VOLTAGE LOW**		
	loader defect (fuse) not enough battery acid in battery defective battery too strong loads frequent starts wire breakage to PLC	check battery charging	

1150	**FAILURE SERIAL INTERFACE MODULE**		
	hardware fault communication processor for bus connection	Eleminate cause!	

1154	**GENERATOR WINDING (L1) TEMPERATURE HIGH**		
	generator overload unbalanced load defective generator wrong cos-phi PT100 sensore defective ambient temperature too high wrong adjustment of fringe value	Check main switch for trace heating system in accordance with manufacturer's instructions Check the measuring sequence of the response switch in accordance with the wiring diagram and manufacturer's instructions for the installed components	

GE Proprietary Information: CONFIDENTIAL! Use or disclosure of data contained on this sheet is subject to the restrictions on the cover or on the first page.

1155	GENERATOR WINDING (L2) TEMPERATURE HIGH		
	generator overload unbalanced load defective generator wrong cos-phi PT100 sensore defective ambient temperature too high wrong adjustment of fringe value	Check main switch for trace heating system in accordance with manufacturer's instructions Check the measuring sequence of the response switch in accordance with the wiring diagram and manufacturer's instructions for the installed components	

1156	GENERATOR WINDING (L3) TEMPERATURE HIGH		
	generator overload unbalanced load defective generator wrong cos-phi PT100 sensore defective ambient temperature too high wrong adjustment of fringe value	Check main switch for trace heating system in accordance with manufacturer's instructions Check the measuring sequence of the response switch in accordance with the wiring diagram and manufacturer's instructions for the installed components	

1157	GENERATOR BEARING (A) TEMPERATURE HIGH		
	bearing defective PT100 sensor defective cable break to PLC ambient temperature too high wrong adjustment of fringe value	Eleminate cause!	

1158	GENERATOR BEARING (B) TEMPERATURE HIGH		
	bearing defective PT100 sensor defective cable break to PLC ambient temperature too high wrong adjustment of fringe value	Eleminate cause!	

GE Proprietary Information: CONFIDENTIAL! Use or disclosure of data contained on this sheet is subject to the restrictions on the cover or on the first page.

1163	EXHAUST GAS TEMPERATURE BEFORE HEAT EXCHANGER MEASURING SIGNAL FAILURE		
	faulty thermocouple Cable break to PLC Analogue input card faulty	change thermocouple	

1164	EXHAUST GAS TEMPERATURE AFTER HEAT EXCHANGER MEASURING SIGNAL FAILURE		
	faulty thermocouple Cable break to PLC Analogue input card faulty	change thermocouple	

1168	REQUEST FOR MAINTENANCE		
	Service counter has reached zero (operating hrs) from preselected limit	reset service counter after completion of service	According to customer setting

1171	TEMPERATURE BEFORE EXHAUST HEAT EXCHANGER HIGH		
	Firing point is too late Overload Mixture is too rich Thermoelement or evaluation equipment is out of order Intake air filter is dirty Exhaust gas back pressure is too high Maximum value has been set incorrectly	Eleminate cause!	

1172	TEMPERATURE AFTER EXHAUST HEAT EXCHANGER HIGH		
	Heating-water regulation is set incorrectly or out of order Return temperature is too high (no heat required) Bypass flap switch is out of order Disturbance in heating water circulation	Eleminate cause!	

GE Proprietary Information: CONFIDENTIAL! Use or disclosure of data contained on this sheet is subject to the restrictions on the cover or on the first page.

1175	**MAINS FAILURE**		
	f min. or f max. responded U min. or U max. responded short interruption Wrong limit value set Automatic start after 5 minutes stable mains return	Eleminate cause!	

1189	**RELEASE FROM SYNCHRONIZING MISSING**		
	a) The synchronisation control logic does not issue a release because the required conditions are not fulfilled	a) Check prerequisites for logical release from synchronization (prerequisites relating to specific order according to control description) b) Eliminate cause !	

1192	**ACTUATOR FAILURE**		
	Disturbance / alarm at the Actuator for butterfly valve (internal equipment). Failure voltage supply 24 VDC, wire break	Eleminate cause!	

1216	**BUS BAR VOLTAGE SENSOR FAILURE**		
	measuring voltage missing busbars voltage-detector defective wire breakage SPG-OK message to PLC PLC-input defective	Eleminate cause!	

1217	**GENERATOR CB STATUS SIGNAL FAILURE**		
	wire breakage switch return messages circuit breaker or contactor defective (return message/auxiliary contacts) relay for switch return message defective PLC-input defective	check cables/connections check auxiliary contacts/answerback of breaker or contactor check auxiliari contacts check/change relay check PLC input (performed by GE-JENBACHER)	

GE Proprietary Information: CONFIDENTIAL! Use or disclosure of data contained on this sheet is subject to the restrictions on the cover or on the first page.

1218	**GENERATOR CB OPENING FAILURE**		
	ground contacts welded (with circuit breaker/contactor combination) circuit breaker defective relay for switch-off order is defective wrong position of retun message switch PLC-output defective	change/check contactor change/check breaker change/check relay check breaker position signal check/change breaker position answerback relay check PLC output (performed by GE-JENBACHER)	

1219	**GENERATOR CB CLOSING FAILURE**		
	relay for switch-on order defective line breakage to circuit breaker/contactor circuit breaker defective PLC output defective	check/change relay check cabels/connections check/change breaker check PLC output	

1220	**GENERATOR CB O-SIGNAL FAILURE**		
	wire breakage to PLC output monitoring PLC input defective PLC output defective	check cables/connections check PLC input (performed by GE-JENBACHER) check PLC output (performed by GE-JENBACHER)	

1221	**GENERATOR CB 1-SIGNAL FAILURE**		
	wire breakage to PLC output monitoring PLC input defective PLC output defective	check cables/connections check PLC input (performed by GE-JENBACHER) check PLC output (performed by GE-JENBACHER)	

2082	**PARAMETER(S) MISSING**		
	Some parameters required for the operation of the machine are missing. No, insufficient or wrong parameters transmitted.	Transmitting the most recent and complete parameter set (*.par file) using e.g. DIA.NE WIN.	

GE Proprietary Information: CONFIDENTIAL! Use or disclosure of data contained on this sheet is subject to the restrictions on the cover or on the first page.

2083	RPS (CONTROL SYSTEM) BATTERY FAILURE		
	NiCd battery for CPU2005 is flat (Battery LED lit) Lithium battery for the user memory is flat (Battery LED flashing)	change NiCd battery Lithium battery	

2084	LEANOX ALGORITHM FAILURE		
	two identical operating point for Lox memory have been used	repeat Lox setup procedure	

2086	CARBURATOR POSITION MEASURING SIGNAL FAILURE		
	No power supply Line breakage Position measurement in gas mixer has been set incorrectly	Switch on power supply Check wiring and adjust position measurement	

2097	DEVIATION POWER SETPOINT TO POWER PRESENT VALUE MAXIMUM		

2101	JACKET WATER TEMPERATURE MEASURING SIGNAL FAILURE		
	wire breakage short circuit defective PT100 defective PT100 measuring transformer defective safety device measuring transformer current supply Analogue input card faulty	Eleminate cause!	

2102	ENGINE OIL TEMPERATURE MEASURING SIGNAL FAILURE		
	wire breakage short circuit defective PT100 defective PT100 measuring transformer defective safety device measuring transformer current supply Analogue input card faulty	Eleminate cause!	

GE Proprietary Information: CONFIDENTIAL! Use or disclosure of data contained on this sheet is subject to the restrictions on the cover or on the first page.

2103	JACKET WATER PRESSURE MEASURING SIGNAL FAILURE		
	leak in the oil lines or the oilpan clogged oil cooler, oil filter or oil line uncontrolled switching off (killing) of engine too low speed oil level below "min. oil level" defective oil pressure transmitter engine switch-off by closed current loop (defect monitoring) wrong adjustment of fringe value	Eleminate cause!	

2104	JACKET WATER PRESSURE MEASURING SIGNAL FAILURE		
	leak in cooling water system defective pressure transmitter of cooling water leaking safety valve damaged membrane in pressure wrong adjustment of fringe value crack in inlet or outlet duct of cylinder head	Eleminate cause!	

2106	GENERATOR WINDING TEMPERATUREL1MEASURING SIGNAL FAILURE		
	wire breakage short circuit PT100 sensore defective Analogue input card faulty	Check wiring	

2107	GENERATOR WINDING TEMPERATUREL2MEASURING SIGNAL FAILURE		
	wire breakage short circuit PT100 sensore defective Analogue input card faulty	Check wiring	

GE Proprietary Information: CONFIDENTIAL! Use or disclosure of data contained on this sheet is subject to the restrictions on the cover or on the first page.

2108	GENERATOR WINDING TEMPERATUREL3MEASURING SIGNAL FAILURE		
	wire breakage short circuit PT100 sensore defective Analogue input card faulty	Check wiring	

2109	GENERATOR BEARING (A) TEMPERATUREMEASURING SIGNAL FAILURE		
	Signal from client		

2110	GENERATOR BEARING (B) TEMPERATUREMEASURING SIGNAL FAILURE		
	Signal from client		

2116	DUMP RADIATOR FAILURE		
	Signal from client	Eleminate cause!	

2117	INTERCOOLER WATER PRESSURE LOW		
	leak in intercooling water system defective pressure transmitter of intercooling water leaking safety valve damaged membrane in pressure wrong adjustment of fringe value crack in inlet or outlet duct of cylinder head	Eleminate cause!	

2118	MIXTURE COOLING WATER PUMP FAILURE		
	motor overload Cable break to PLC Motor protection (contactor) tripped	Check water pump and electric motor. Compare the engine emergency circuit breaker setting with the actual current collection of the motor.	

2120	ENGINE ROOM VENTILATION FAILURE		
	Cable to PLC defect Ventilationdefect Engine emergency circuit breaker set incorrectly	Eleminate cause!	

GE Proprietary Information: CONFIDENTIAL! Use or disclosure of data contained on this sheet is subject to the restrictions on the cover or on the first page.

3003	**MEASURING SIGNAL FAILURE**		
	Signal from client		

3155	**MEASURING SIGNAL FAILURE CH4-CONTENT**		
	Defective fuse Wire breakage on PLC Defective analog input card Customer signal not present	Eleminate cause!	

3156	**GAS PRESSURE MEASURING SIGNAL FAILURE**		
	wire breakage short circuit defective PT100 defective PT100 measuring transducer defective fuse at measuring transducer power supply	Eleminate cause!	

3158	**O2 CONTENT MEASURING SIGNAL FAILURE**		
	wire breakage short circuit defective PT100 defective PT100 measuring transducer defective fuse at measuring transducer power supply	Eleminate cause!	

3159	**GAS TEMPERATURE MEASURING SIGNAL FAILURE**		
	wire breakage short circuit defective PT100 defective PT100 measuring transformer defective safety device measuring transformer current supply Analogue input card faulty	Eleminate cause!	

GE Proprietary Information: CONFIDENTIAL! Use or disclosure of data contained on this sheet is subject to the restrictions on the cover or on the first page.

3160	**GAS VOLUME MEASURING SIGNAL FAILURE**		
	wire breakage short circuit defective PT100 defective PT100 measuring transformer defective safety device measuring transformer current supply Analogue input card faulty	Eleminate cause!	

3216	**ENGINE OIL TEMPERATURE HIGH**		
	oil cooler clogged, dirty hot water feedback temp. is too high defective cooling water pump cooling water heat exchanger chocked dirty return remperature control incorrectly adjusted fresh water heat exchanger chocked, dirty table cooler too small ambient temp. to high (with table cooler) throughflow amount too low (primary/second.) limit value adjusted incorrectly	Eleminate cause!	

3217	**MISFIRING FAILURE**		
	Wrong distance of electrodes Wrong A/F ration Failure in ignition system (sparkovers, break of insulators) Too late ignition point Misvire detection incorrectly adjusted or defective Ignition defective Ignition coil defective	Eleminate cause!	

GE Proprietary Information: CONFIDENTIAL! Use or disclosure of data contained on this sheet is subject to the restrictions on the cover or on the first page.

3218	**OIL PRESSURE LOW**		
	leak in the oil lines or the oilpan clogged oil cooler, oil filter or oil line uncontrolled switching off (killing) of engine too low speed oil level below "min. oil level" defective oil pressure transmitter engine switch-off by closed current loop (defect monitoring) wrong adjustment of fringe value	Eleminate cause!	

3219	**EXCITATION VOLTAGE LOW**		
	Voltage controller faulty Excitation voltage protection has been tripped	change controller Close protection switch	

3220	**JACKET WATER TEMPERATURE HIGH**		
	hot water feedback temp. too high cooler clogged, calcified, dirty return temperature control incorrectly adjusted emergency cooler clogged calcified, dirty fresh water missing cool. wat. pump defect defect. cool. water temp. transmission heat circulation pump defective heat circ. slide, fresh - water slide closed ambient temp. too high (with table cooler) throughflow amount too small (primary/secondary) follow-up heating when shut off water circulations not vented motor output too high glycool amount too high defective short-circuit thermostat wrong adjustment of fringe value water circulation not vented	Eleminate cause!	

GE Proprietary Information: CONFIDENTIAL! Use or disclosure of data contained on this sheet is subject to the restrictions on the cover or on the first page.

3223	**INTAKE AIR TEMPERATURE HIGH**		
	Defective fuse Wire breakage on PLC Defective analog input card Customer signal not present	Eleminate cause!	

3224	**INTAKE AIR TEMPERATURE MEASURING SIGNAL FAILURE**		
	Exceeding the intake temperature for which full engine output was agreed. An output reduction caused by [too high] an intake temperature is possible.	This warning should be regarded as an indication, no further action is required. The reasons for the output reduction are physical in nature. Cleaning the exhaust-gas turbochargers will result in higher power reserves.	

3311	**IN/OUT CHANNEL FAILURE**		
	Regulation fault MSF fault Converter adjustment!	Eleminate cause!	

3402	**JACKET WATER PRESSURE LOW**		
	Leakage in emergency cooling water system Faulty emergency cooling water pressure sensor Leaking safety valve Faulty membrane in pressure compensation reservoir Incorrectly preset limiting value Wire breakage to PLC	Eleminate cause!	

3406	**JACKET WATER PRESSURE HIGH**		
	Registration by customer		

GE Proprietary Information: CONFIDENTIAL! Use or disclosure of data contained on this sheet is subject to the restrictions on the cover or on the first page.

3408	CYLINDER EXHAUST GAS TEMPERATURE POSITIVE DEVIATION FROM AVERAGE VALUE		
	pre chamber gas valve faulty Ignition breakdown (glow plug, ignition coil) thermoelement defect limit value adjusted incorrectly cylinder knocks	Eleminate cause!	

3409	CYLINDER EXHAUST GAS TEMPERATURE NEGATIVE DEVIATION FROM AVERAGE VALUE		
	pre chamber gas valve faulty Ignition breakdown (glow plug, ignition coil) thermoelement defect limit value adjusted incorrectly cylinder knocks	Eleminate cause!	

3411	FUEL MIXTURE TEMPERATURE HIGH		
	defective mixture cooling pump mixture cooler clogged, calcified, dirty hot water feedback temp. too high fresh water exchanger is clogged, calcified, dirty defective PT100 water circulation of mixture cooling not vented cooling water amount of mixture too low wrong adjustment of fringe value	Eleminate cause!	

3497	Failure in the safety loop		
	When the closed-current circuit is activated by an EMERGENCY STOP or by the heating circuit control system, not all closed-current circuit relays report the drop-out position to the control system.	Have all closed-current circuit relays checked by a GE Jenbacher service mechanic or by a mechanic from a specialized company authorised to do so by GE Jenbacher. The error message can only be reset when the EMERGENCY STOP switch is pressed. To that end, all closed-current circuit relays must report the drop-out position to the control system.	

GE Proprietary Information: CONFIDENTIAL! Use or disclosure of data contained on this sheet is subject to the restrictions on the cover or on the first page.

3516	JACKET WATER TEMPERATURE HIGH		
	Wire breakage Short-circuit Rotating rectifier diode error Excitation protection switch activated Excitation current relais failure Cos phi / voltage regulator error	Eleminate cause!	

3517	COMMUNICATION TO DIA.NE WIN SERVER FAILED		
	Connection between DIA.NE XT and DIA.NE WIN server interrupted DIA.NE WIN server has failed or is defective HUB failure Software technical problem at DIA.NE WIN server	Check connection, plug in network cable, check functionality of network components (cables, DIA.NE WIN server network card, HUB, DIA.NE XT network components), replace network components. Check and repair voltage supply, contact competence centre, replace DIA.NE WIN server hard disc, replace DIA.NE WIN server. Check and repair voltage supply, contact competence centre, replace HUB. Contact competence centre, replace DIA.NE WIN server hard disc	

GE Proprietary Information: CONFIDENTIAL! Use or disclosure of data contained on this sheet is subject to the restrictions on the cover or on the first page.

3518	DATA REGISTRATION IN DIA.NE WIN SERVER FAILED		
	Communication to DIA.NE WIN server has failed DIA.NE WIN server has failed or is defective HUB failure Software technical problem at DIA.NE WIN server	Check connection, plug in network cable, check functionality of network components (cables, DIA.NE WIN server network card, HUB, DIA.NE XT network components), replace network components. Check and repair voltage supply, contact competence centre, replace DIA.NE WIN server hard disc, replace DIA.NE WIN server. Check and repair voltage supply, contact competence centre, replace HUB. Contact competence centre, replace DIA.NE WIN server hard disc	

3526	HEATING WATER RETURN TEMPERATURE BEFORE ENGINE MEASURING SIGNAL FAILURE		
	wire breakage short circuit temp. transmission defective defective PT100 measuring transformer wrong switch position on PLC component wrong adjustment of fringe value	Eleminate cause!	

3542	CYLINDER EXHAUST GAS TEMPERATUREMEASURING SIGNAL FAILURE		
	faulty thermocouple Cable break to PLC Analogue input card faulty	change thermocouple	

3561	OVERSPEED (RPS-CONTROL SYSTEM)		
	speed overshoot afte mains failure speed limit wrongly adjusted	Eleminate cause!	

GE Proprietary Information: CONFIDENTIAL! Use or disclosure of data contained on this sheet is subject to the restrictions on the cover or on the first page.

3562	FUEL MIXTURE TEMPERATURE LOW		
	Electrical control valve in the mixture cooling circuit Thermostatic control valve in the mixture cooling circuit	Check control valve, check controller setting Check control valve, check control valve interior	

3564	FAILURE TURBOBYPASS VALVES		
	Internal actuator fault / faulty internal electronics Deviation between setpoint position and actual position due to sticky or blocked valve Deviation between setpoint position and actual position due to dynamic peak load, possibly insufficient actuator driving force Internal temperature control activated Cabling - wire breakage	Replace bypass valve Remedy cause	

3565	GENERATOR POWER SETPOINT MEASURING SIGNAL FAILURE		
	wire breakage to PLC output monitoring PLC input defective PLC output defective	check cables/connections check PLC input (performed by GE-JENBACHER) check PLC output (performed by GE-JENBACHER)	

3566	GENERATOR POWER FACTOR SETPOINT MEASURING SIGNAL FAILURE		
	wire breakage to PLC output monitoring PLC input defective PLC output defective	check cables/connections check PLC input (performed by GE-JENBACHER) check PLC output (performed by GE-JENBACHER)	

GE Proprietary Information: CONFIDENTIAL! Use or disclosure of data contained on this sheet is subject to the restrictions on the cover or on the first page.

1 General 1
2 Engine principle 1
3 Crankcase housing 1
4 Oil pan 1
5 Cylinder liners 1
6 Cylinder heads 2
7 Crankshaft 4
8 Connecting rod 5
9 Vibration damper 6
10 Main and connecting rod bearing shells: 7
11 Piston 7
12 Gear train 8
13 Valve timing gear 9
14 Exhaust gas turbocharger 11
15 Engine oil pump 12
16 Engine cooling water pump 13
17 Starter 13
18 Gas quantity controller 13

1 General

The GE Jenbacher gas engine works on the 4-stroke principle and is a water-cooled 20 cylinder V-engine (70°) with an exhaust gas turbocharger for pressure charging the intake mixture.

2 Engine principle

GE Jenbachergas engines use the LEANOX method, which is a further development of the lean-mix engine principle.

Lean-mix engines are supplied with a gas mixture with an air surplus to minimise emissions already during the combustion stage.

3 Crankcase housing

The spherioidal graphite housing features side crankcase covers that provide easy access during assembly/disassembly.

On the flywheel-side, the crankcase is sealed off (oil tight and dust proof) by the gearbox and on the opposite side by the crankcase cover.

4 Oil pan

The oil pan is made out of welded steel plate and closes off the bottom of the crankcase.

5 Cylinder liners

The cylinder liners are wet and can be replaced individually. They are spun cast and are inserted into the cylinder block from above.

As they heat up, they are free to expand downwards.

GE Proprietary Information: CONFIDENTIAL! Use or disclosure of data contained on this sheet is subject to the restrictions on the cover or on the first page.

The water room and the power module are separated by O-rings on the outside of the cylinder liners.

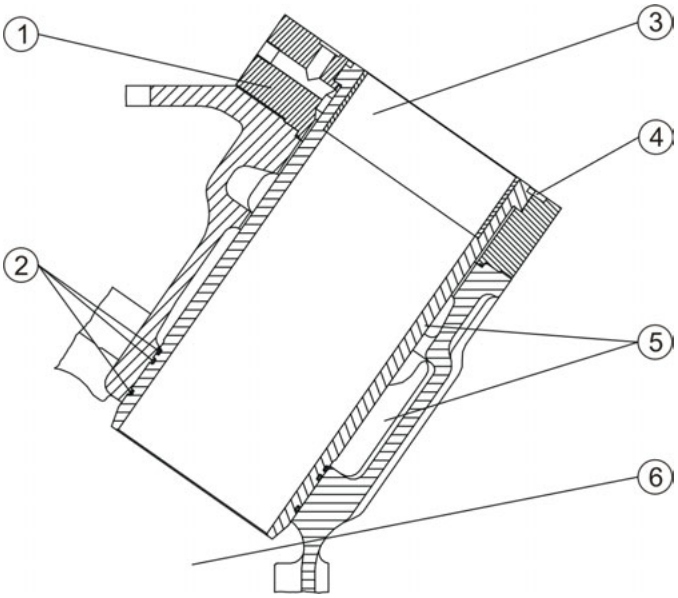

Types 3/4 cylinder liner

①	Bearing ring	④	Cylinder head gasket
②	O-ring	⑤	Water room
③	Scraper ring	⑥	Power module

6 Cylinder heads

Crossflow cylinder heads with 4 valves.

The water-cooled cylinder heads - which can be replaced separately - are all equipped with an inlet and exhaust valve and with a spark plug.

The intake and exhaust valves feature a valve rotation device (Rotocaps). The pressed valve seat rings can be replaced.

GE Proprietary Information: CONFIDENTIAL! Use or disclosure of data contained on this sheet is subject to the restrictions on the cover or on the first page.

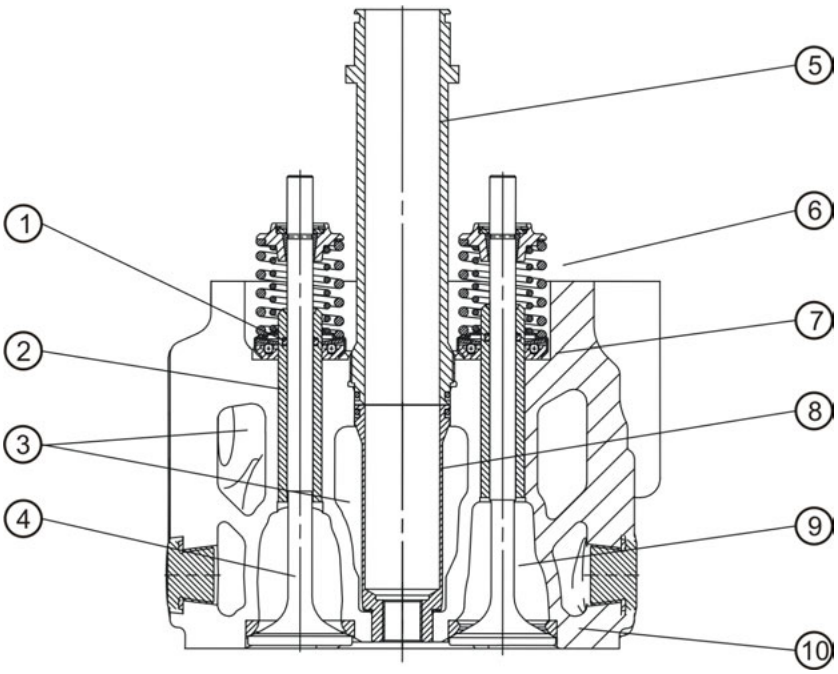

Cylinder head section, type 4, right

①	Valve-stem packing (O-ring)	⑥	valve spring
②	valve guide	⑦	Rotocap
③	Water rooms	⑧	Spark plug sleeve
④	Exhaust valve	⑨	Intake valve
⑤	Spark plug sleeve extension	⑩	valve seat

GE Proprietary Information: CONFIDENTIAL! Use or disclosure of data contained on this sheet is subject to the restrictions on the cover or on the first page.

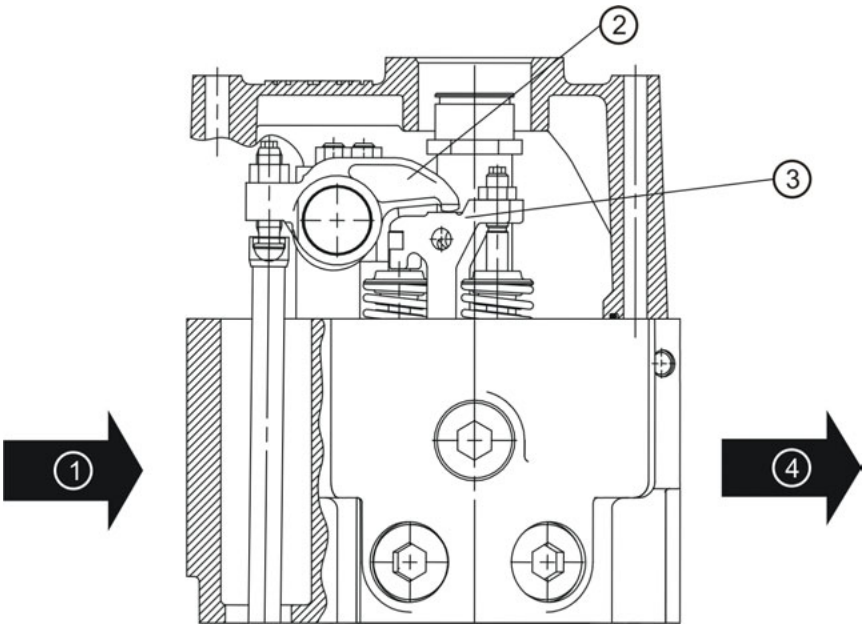

Cylinder head section, type 4, left

①	Mixture	③	Valve lifter
②	rocker arm	④	Exhaust gas

7 Crankshaft

The drop-forged crankshaft runs on 11 bearings, is statically and dynamically balanced and has bolted-on counter-weights. All bearing journals have been surface hardened and polished.

One of the main bearings is designed as a guide bearing and takes up the axial forces exerted by the crankshaft.

The crankshaft main bearings are lubricated via oil ducts in the crankcase.

The crankshaft is fitted at one end with a balanced flywheel with the ring gear for starting, and a vibration damper at the other end.

GE Proprietary Information: CONFIDENTIAL! Use or disclosure of data contained on this sheet is subject to the restrictions on the cover or on the first page.

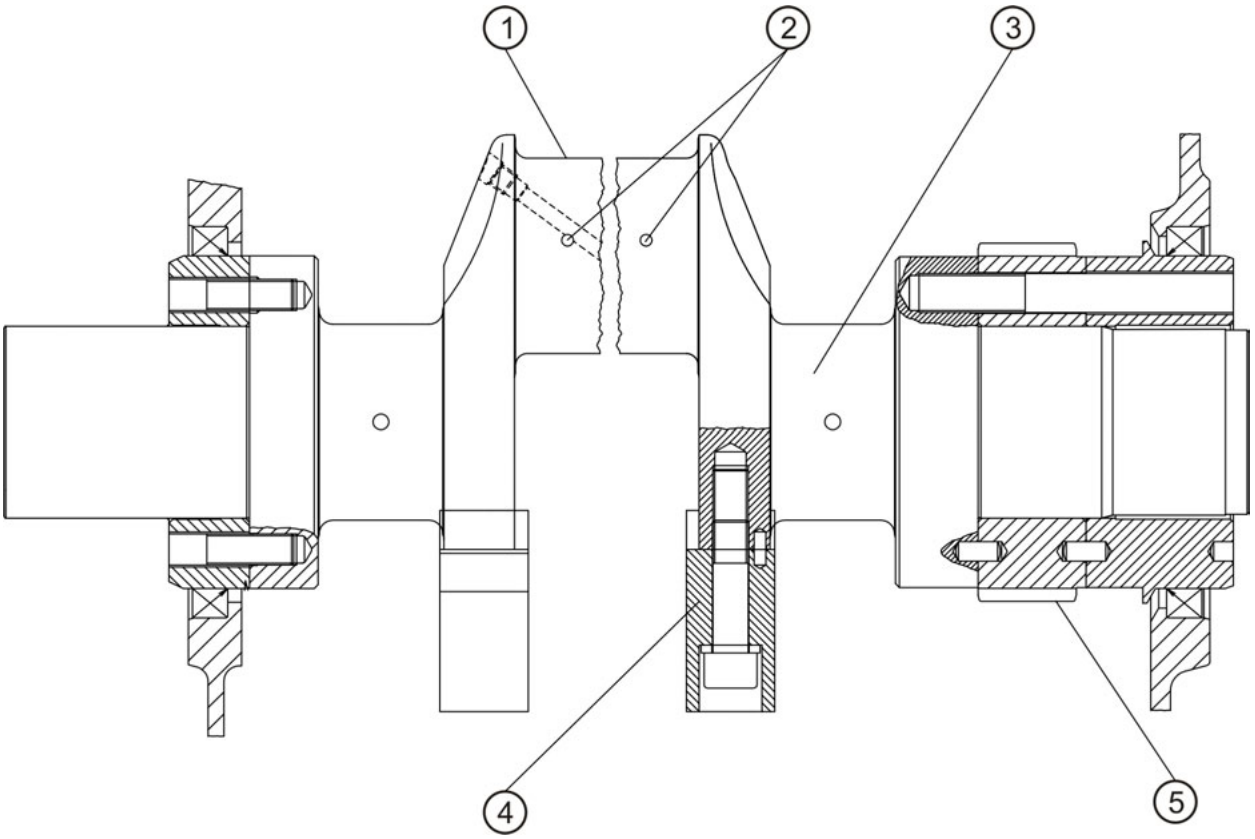

Crankshaft section, types 3 and 4

①	Connecting rod bearings	④	counterweight
②	Oil ducts	⑤	Crankshaft toothed gear
③	Main bearing		

8 Connecting rod

Assembled, staged connecting rod with press-fitted piston bolt bushing.

The connecting rods are drop-forged and quenched and subsequently drawn.

The big-end bearing shells are replaceable plain bearings.

The big-end bearings are lubricated via oil ducts in the crankshaft.

The gudgeon pins are supplied with oil from the piston cooling nozzles. *)

GE Proprietary Information: CONFIDENTIAL! Use or disclosure of data contained on this sheet is subject to the restrictions on the cover or on the first page.

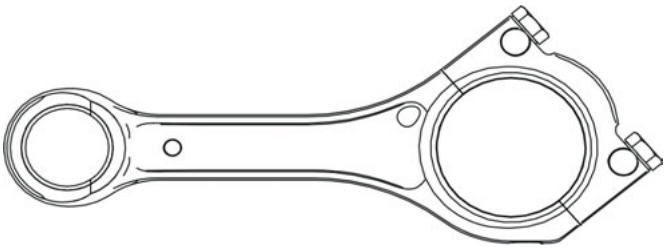

Connecting rod

*) in general through piston cooling nozzles: piston cooling nozzles supply the piston with cooling oil. The cooling oil returned from the piston is supplied to the piston bolt via bores in the small connecting rod bearing.

9 Vibration damper

A viscous damper is used to reduce rotational vibrations of the crankshaft.

The viscous damper is a fully closed housing containing a flywheel. The cavities between the housing and the flywheel are filled with silicone oil.

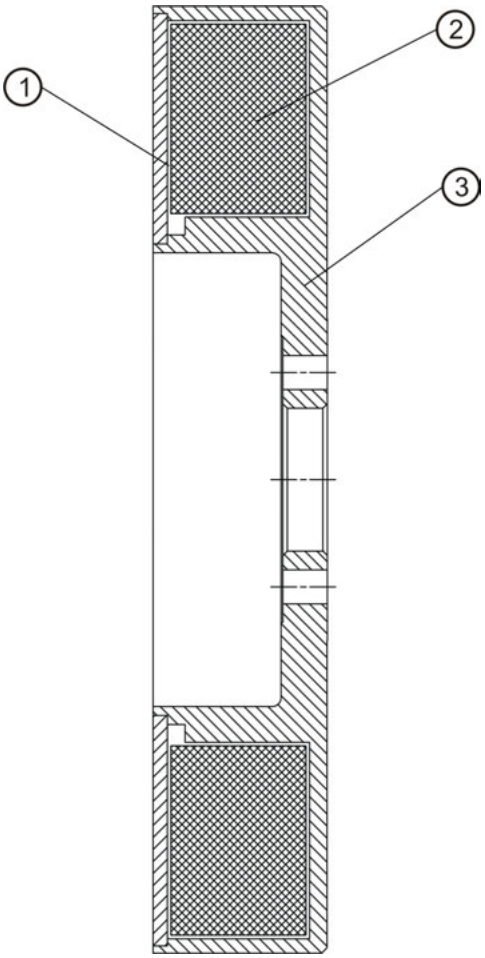

Vibration damper section

GE Proprietary Information: CONFIDENTIAL! Use or disclosure of data contained on this sheet is subject to the restrictions on the cover or on the first page.

①	Cavities	③	Housing
②	Flywheel mass		

10 Main and connecting rod bearing shells:

Two-part, replaceable crankshaft main bearings and connecting rod bearings.

		Sputter bearing	Grooved ball bearing	3-metal bearing
Connecting rod bearings	upper bearing shell	x		
	lower bearing shell	x		
Main bearing	upper bearing shell			x
	lower bearing shell	x		

11 Piston

The light metal alloy pistons with cooling duct are equipped with a keystone ring, a taper face compression ring and an oil control ring with expander.

Cooling oil is supplied via fixed spray nozzles mounted in the crankcase.

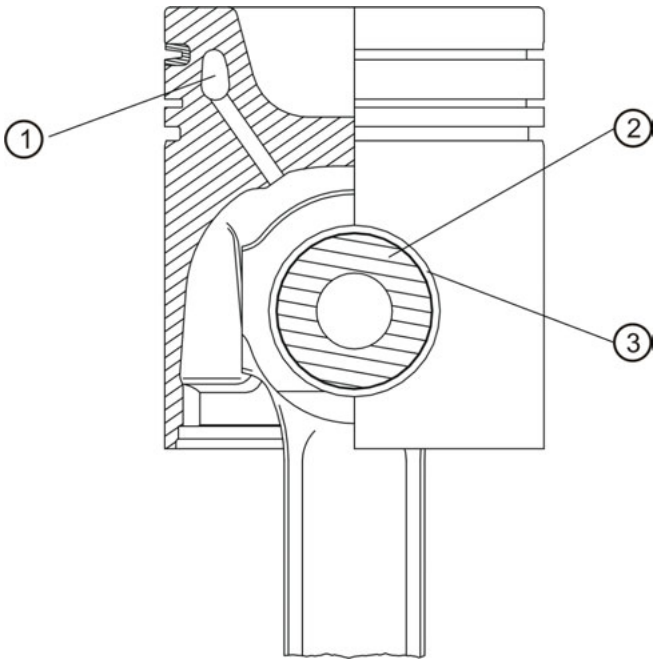

Piston section

①	Cooling oil duct	③	snap ring
②	Piston pin		

GE Proprietary Information: CONFIDENTIAL! Use or disclosure of data contained on this sheet is subject to the restrictions on the cover or on the first page.

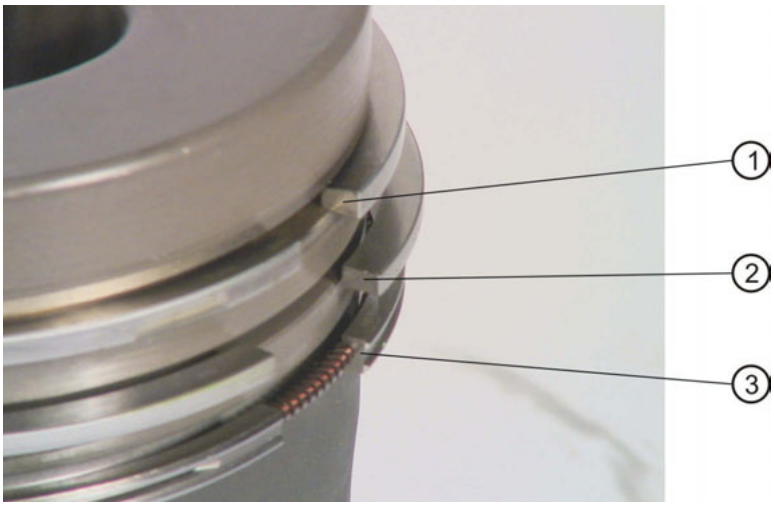

Types 3 and 4 pistons with piston rings

①	Keystone ring:	③	Oil control ring with expander
②	Taper face compression ring		

12 Gear train

The gear driving the engine oil pump and the camshaft can be found on the flywheel side. The crankshaft toothed gear, the intermediate gears and the camshaft timing gear all have timing marks to ensure that the timing is correctly adjusted.

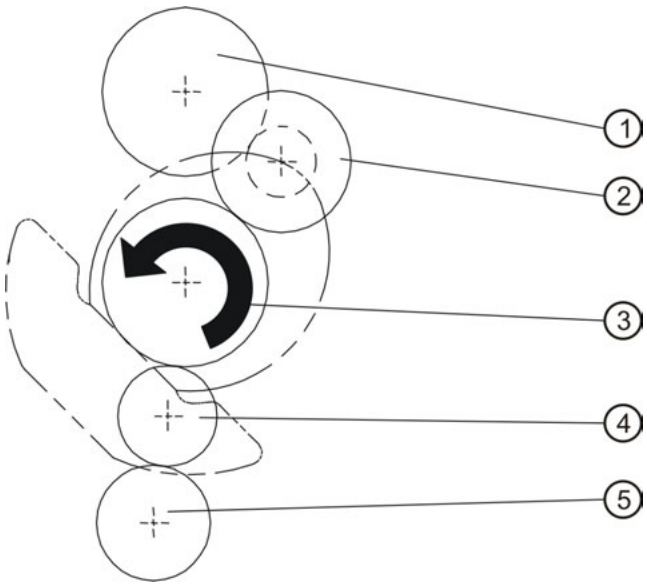

Type 4 gear train diagram

GE Proprietary Information: CONFIDENTIAL! Use or disclosure of data contained on this sheet is subject to the restrictions on the cover or on the first page.

①	Camshaft timing gear	④	Intermediate gear
②	Staged intermediate gear	⑤	Driving gear of engine oil pump
③	Crankshaft toothed gear		

13 Valve timing gear

The camshaft runs on 11 bearings in replaceable bearing bushes and is driven by the crankshaft via intermediate gears. The two inlet and exhaust valves are activated by the camshaft via tappets, tappet push rods and valve lifters. An adjustment bolt on each rocker arm is used for accurate adjustment of the tappet clearance. Pressurised oil is used to lubricate the tappets and the rocker arm mountings. The oil is supplied to each rocker arm through a bore in the push rod. The other moving parts in the cylinder head are lubricated by the spray oil emerging at the rocker arm mountings.

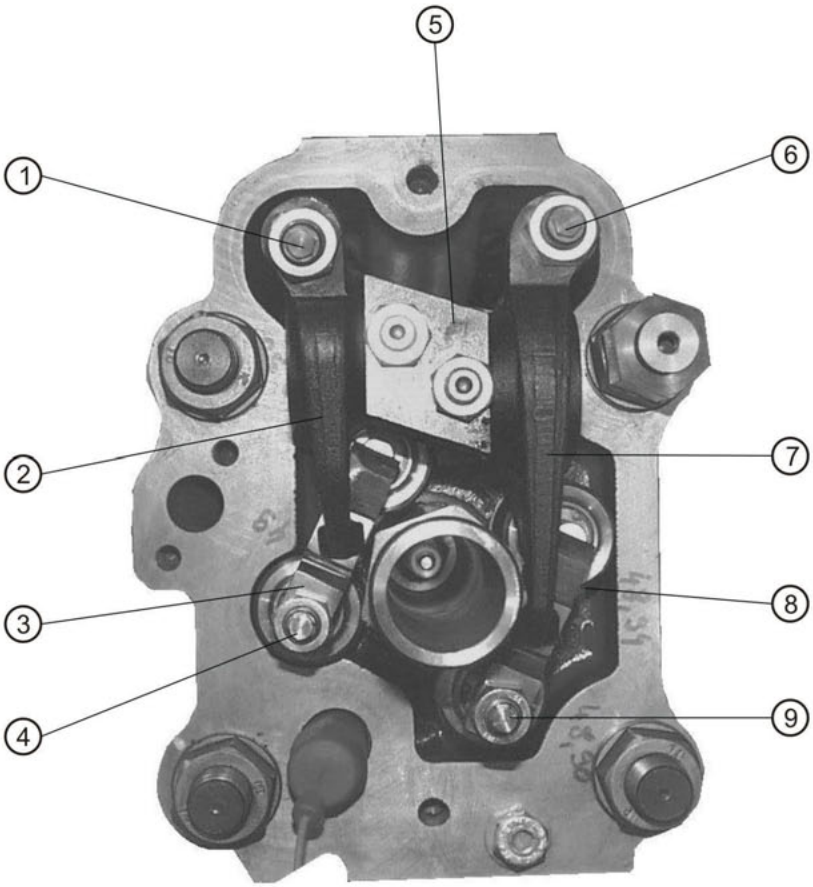

Type 4 valve timing gear, Fig. 1

①	Valve play main adjusting bolt (intake valves)	⑥	Valve play main adjusting bolt (exhaust valves)
②	rocker arm	⑦	rocker arm
③	Valve lifter (intake valves)	⑧	Valve lifter (exhaust valves)

GE Proprietary Information: CONFIDENTIAL! Use or disclosure of data contained on this sheet is subject to the restrictions on the cover or on the first page.

④	Valve play adjusting bolt (intake valves)	⑨	Valve play adjusting bolt (exhaust valves)
⑤	Rocker arm bracket		

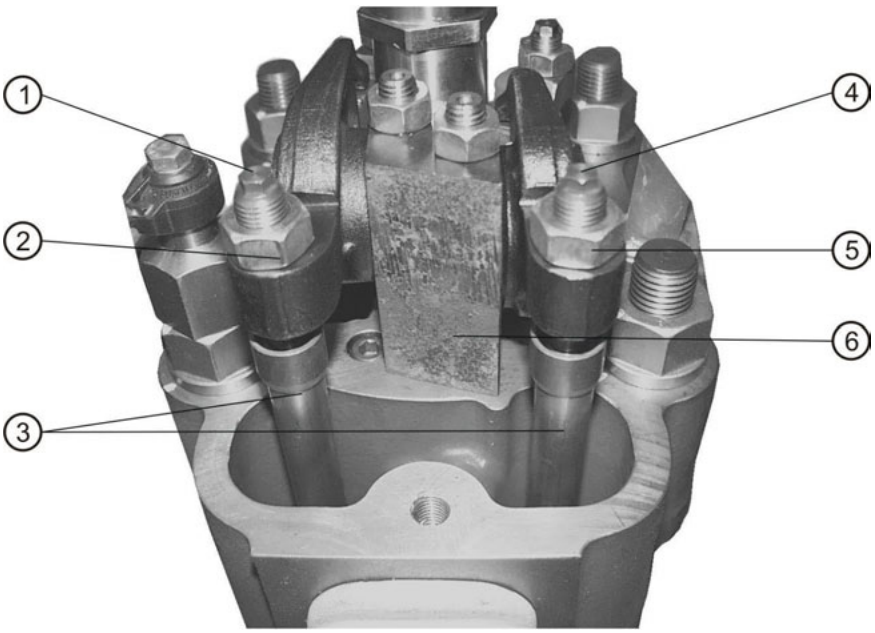

Type 4 valve timing gear, Fig. 2

①	Valve play main adjusting bolt (exhaust valves)	④	Valve play main adjusting bolt (intake valves)
②	Lock nut	⑤	Lock nut
③	Push rod	⑥	Rocker arm bracket

GE Proprietary Information: CONFIDENTIAL! Use or disclosure of data contained on this sheet is subject to the restrictions on the cover or on the first page.

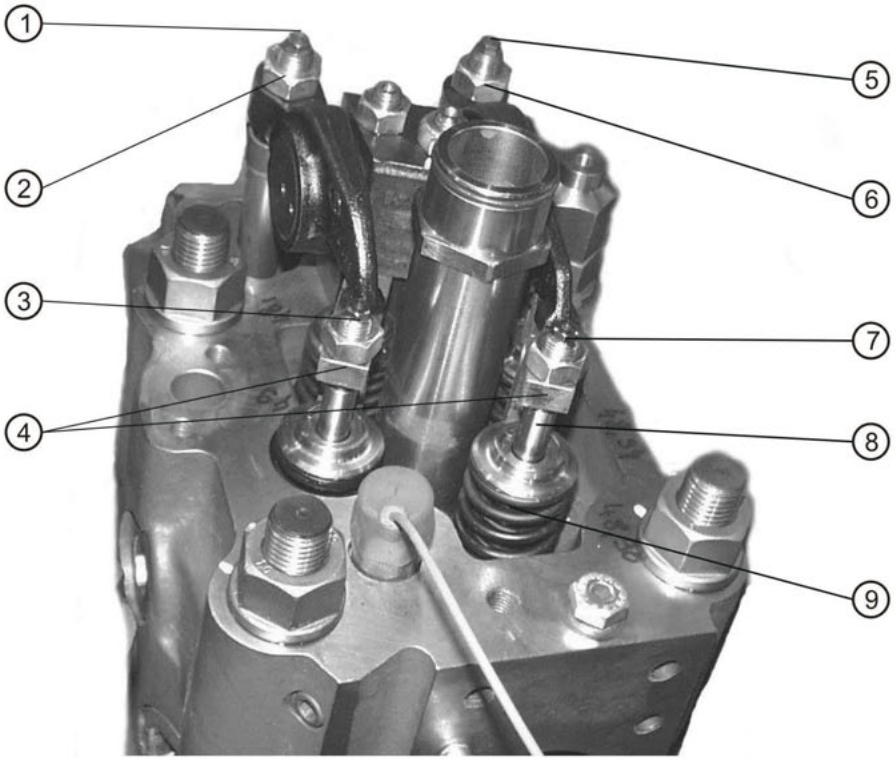

Type 4 valve timing gear, Fig. 3

①	Valve play main adjusting bolt (intake valves)	⑥	Lock nut
②	Lock nut	⑦	Valve play adjusting bolt (exhaust valves)
③	Valve play adjusting bolt (intake valves)	⑧	Exhaust valve
④	Lock nut	⑨	Valve spring
⑤	Valve play main adjusting bolt (exhaust valves)		

14 Exhaust gas turbocharger

The exhaust gases entering the turbine housing drive the turbine wheel, and therefore also the compressor impeller which sits on the same shaft as the turbine wheel. The compressor impeller draws in the gas/air mixture from the gas/air mixer and pushes it into the engine intake chamber via the mixture cooler (mixture/water heat exchanger) and the throttle valve.

The exhaust gas turbocharger is lubricated by the engine lubricating system.

GE Proprietary Information: CONFIDENTIAL! Use or disclosure of data contained on this sheet is subject to the restrictions on the cover or on the first page.

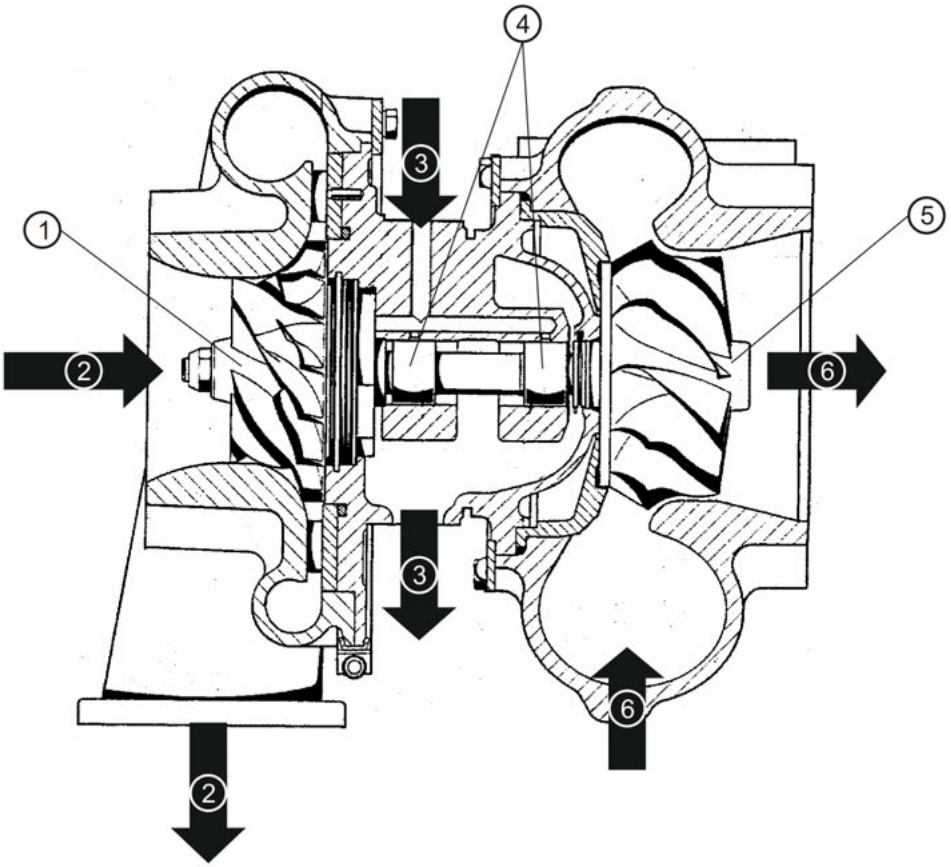

Types 208, 3 and 4 turbocharger

①	Compressor impeller	④	Plain bearing
②	Mixture	⑤	Turbine wheel
③	Engine oil	⑥	Exhaust gas

15 Engine oil pump

GE Jenbacher engines are equipped with a forced feed lubrication system.

A mechanical toothed gear pump is used as the engine oil pump.

GE Proprietary Information: CONFIDENTIAL! Use or disclosure of data contained on this sheet is subject to the restrictions on the cover or on the first page.

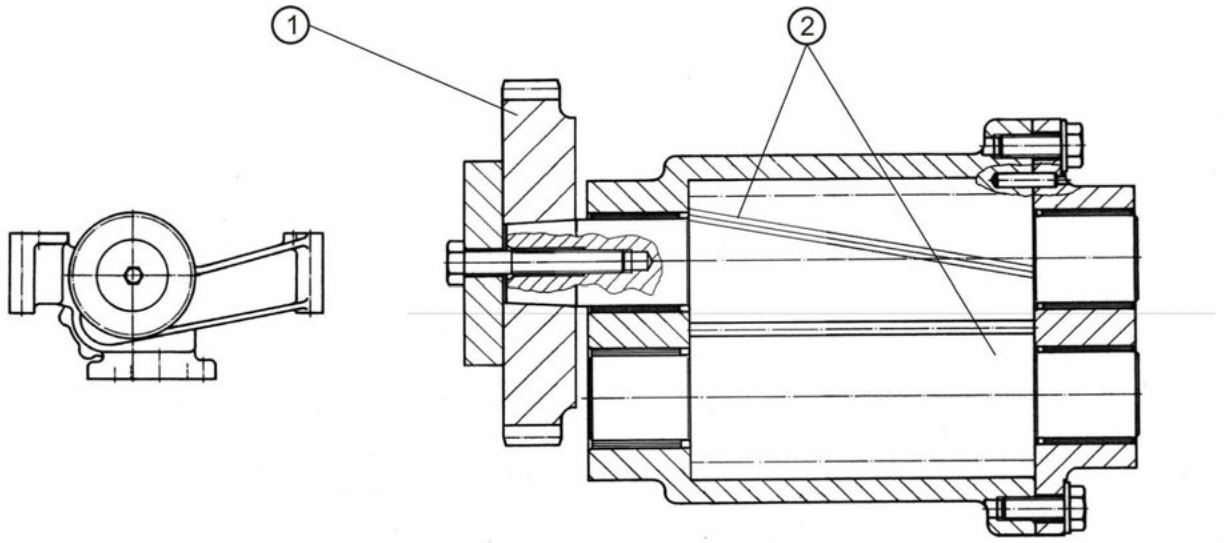

Type 4 engine oil pump

①	Driving gear	②	Oil pump gear wheel

16 Engine cooling water pump

An electrical pump provides for cooling water circulation in the closed engine cooling water system.

17 Starter

One or more electric sliding gear starter motors.

18 Gas quantity controller

The gas volume controller is an active gas proportioning valve and is part of the LEANOX system.

To create a combustible air-gas mixture, fuel gas is added to the intake air through the gas proportioning valve.

To change the air ratio λ, the required gas amount is entered via the CAN bus (dia.ne).

$$\text{Air ratio } \lambda = \frac{\text{Actual air charge supplied for combustion}}{\text{Stoichiometrically required air charge}}$$

GE Proprietary Information: CONFIDENTIAL! Use or disclosure of data contained on this sheet is subject to the restrictions on the cover or on the first page.

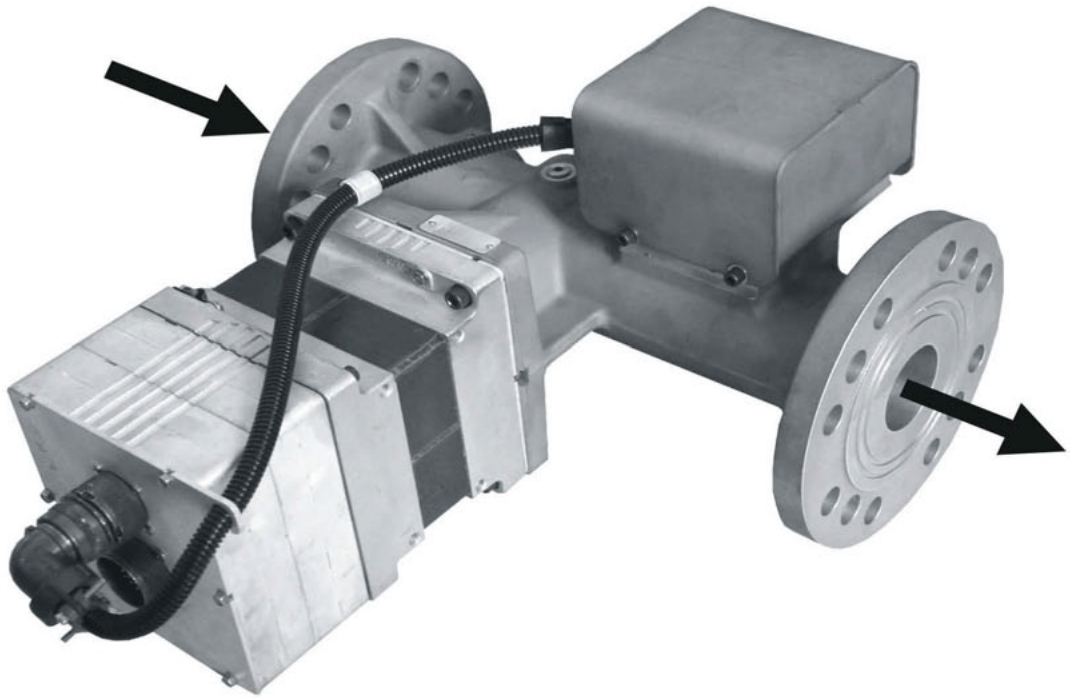

Gas quantity controller

GE Proprietary Information: CONFIDENTIAL! Use or disclosure of data contained on this sheet is subject to the restrictions on the cover or on the first page.

Build data:

Mode of operation 4-stroke spark ignition engine Intake pressure charging with exhaust gas turbocharger		
Direction of rotation viewed towards flywheel anti-clockwise		
Cylinder arrangement		cylinder V-engine (70°)
Number of cylinders		20
Bore	mm	145
Stroke	mm	185
Total displacement	l	61
Compression ratio	Epsilon	12,5

Standard reference conditions:

Air pressure	psi	14.5*)
Air temperature	°F	77
Relative humidity	%	30

*) or 328 ft above mean sea level

Loss of engine performance:

Height 1,2 % for every 328 ft over 2020 ft
Temperature 0,67 % for every 33.8°F over >95 °F
Temperature 1,11 % for every 33.8°F over >113 °F

Operational data:

Rated engine speed	min^{-1}	1800
Average piston speed at rated engine speed	m/s	11,1
Lubricating oil – operating pressure	bar	4 - 5
Lubricating oil – minimum pressure[1)]	bar	2 - 4
Cooling water outlet temperature at full load	°C	90
Lubricating oil consumption (on average at full load)	g/kWh	0,3

1) The minimum lubricating oil pressure depends on engine oil temperature and engine speed and lies in the 2 – 4 bar range.

Weight/Dimensions:

Engine weight (dry)	kg	6125
Engine weight (when operational)	kg	6900
Length	mm	3750
Width	mm	1322
Height	mm	2033

Capacities:

Engine lubricating oil	l	457
Engine cooling water	l	230

GE Proprietary Information: CONFIDENTIAL! Use or disclosure of data contained on this sheet is subject to the restrictions on the cover or on the first page.

Field emissions:

(Electromagnetic radiation)

All GE Jenbacher engines satisfy the requirements specified in the standards:

- DIN EN 61000-6-1: Electromagnetic compatibility (EMC) – Part 6-1:
  Generic standards - immunity for residential, commercial and light industrial environments.
- DIN EN 61000-6-4: DIN EN 61000-6-4: Electromagnetic compatibility (EMC) – Part 6-4:
  Generic standards - Generic standard interference emission for industrial environment

Example showing the result of an EMC measurement on a GE Jenbacher engine

①	Legal limit value	③	Background noise level
②	Engine noise level		

GE Proprietary Information: CONFIDENTIAL! Use or disclosure of data contained on this sheet is subject to the restrictions on the cover or on the first page.

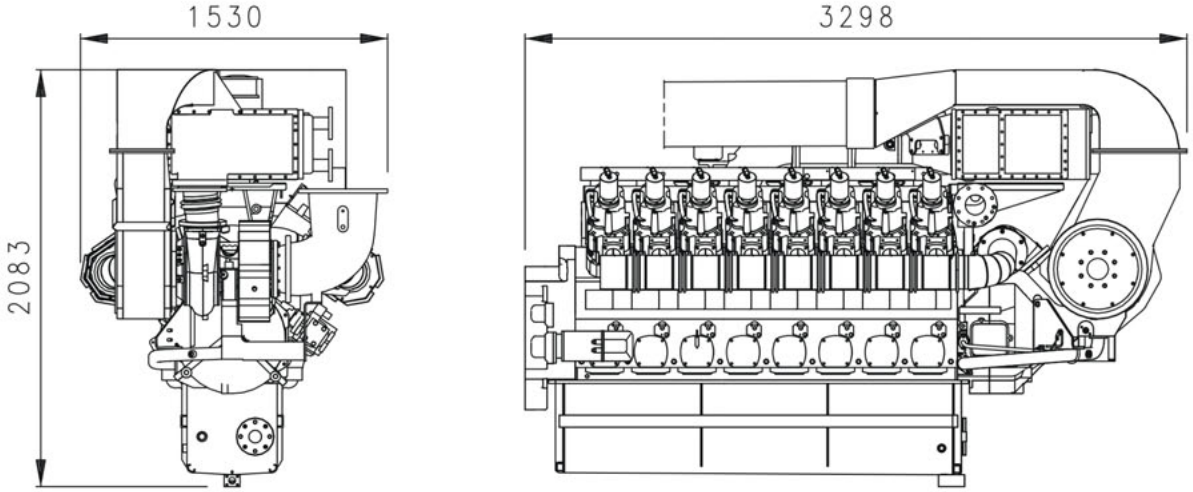

Engine view 420

All data refer to an engine running at full load under the given temperature conditions.

The operating materials and system peripherals must conform to TI 1100-0110 "Requirements for GE Jenbacher Gas Engines"

GE Proprietary Information: CONFIDENTIAL! Use or disclosure of data contained on this sheet is subject to the restrictions on the cover or on the first page.

1 Key to engine diagrams:

In order to improve the clarity of the diagrams, any media entering or exiting the engine are indicated by an arrow.

Different letters are used to identify different media (e.g. D = fuel gas inlet). In some cases, a digit is added to the letter to give even more detailed information.

The tip of the arrow indicates the flow direction of the media.

Fuel gas:

D	Fuel gas entry

Intake air:

V	Intake air

Air-gas mixture

DV	Air-gas mixture

Water:

W	Engine cooling water, engine cooling water entering
W_1	Engine cooling water exiting
W_2	Water entering (mixture/water heat exchanger stage 1)
W_3	Water exiting (mixture/water heat exchanger stage 1)
M	Water entering (mixture/water heat exchanger stage 2)
N	Water exiting (mixture/water heat exchanger stage 2)

Engine oil :

I	Engine oil refill (connection to fresh oil tank)
J	Engine oil drain (connection to used oil tank)

Exhaust gas:

C	Exhaust gas outlet

GE Proprietary Information: CONFIDENTIAL! Use or disclosure of data contained on this sheet is subject to the restrictions on the cover or on the first page.

2 Engine diagrams

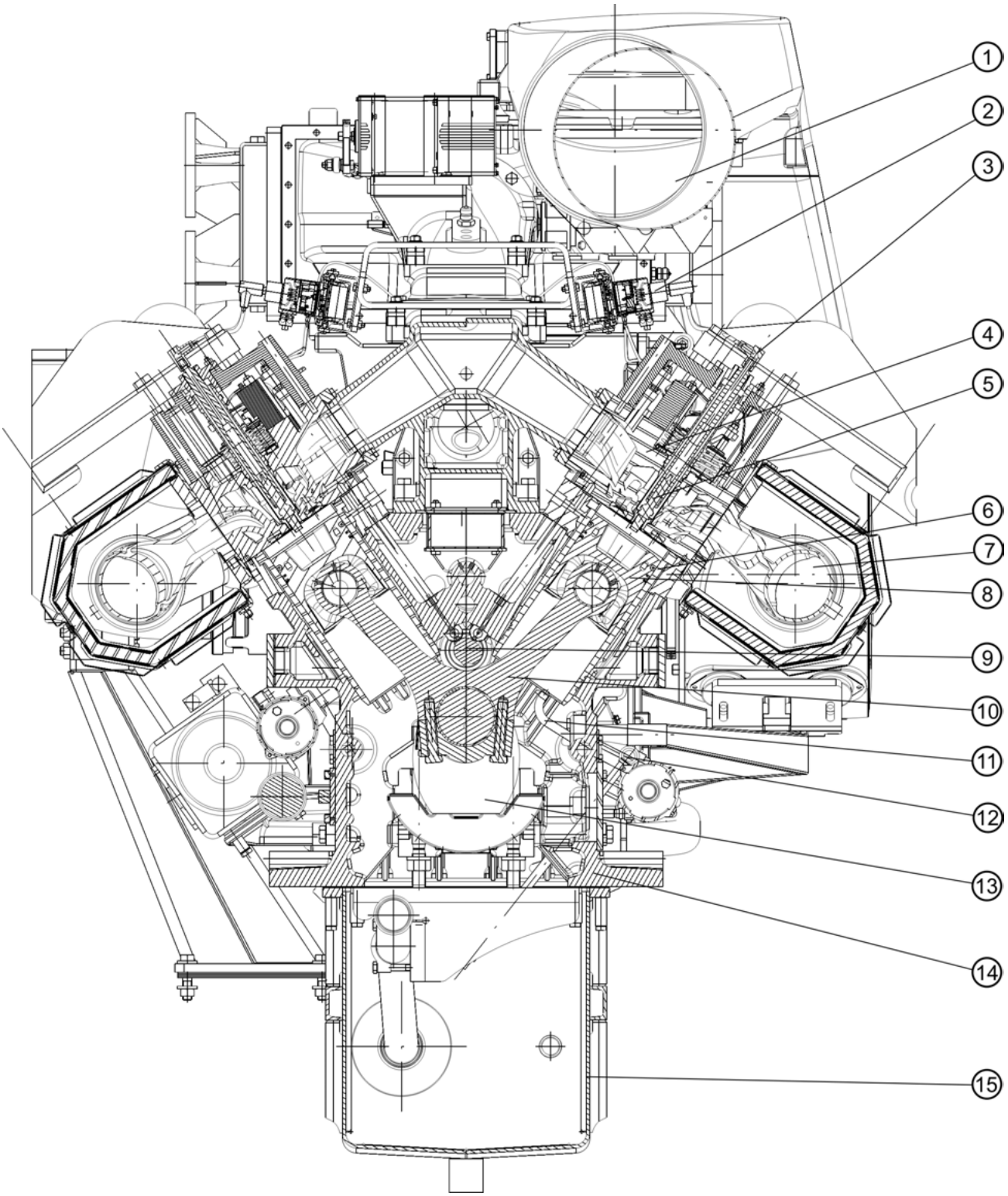

GE Proprietary Information: CONFIDENTIAL! Use or disclosure of data contained on this sheet is subject to the restrictions on the cover or on the first page.

①	Intake line	⑨	Camshaft
②	Ignition coil	⑩	Connecting rod
③	Spark plug connector	⑪	Piston cooling nozzle
④	Cylinder head	⑫	Dip stick
⑤	Spark plug	⑬	Crankshaft with counterweight
⑥	Cylinder liner	⑭	Crankcase housing
⑦	Exhaust gas manifold	⑮	Engine oil pan
⑧	Piston		

GE Proprietary Information: CONFIDENTIAL! Use or disclosure of data contained on this sheet is subject to the restrictions on the cover or on the first page.

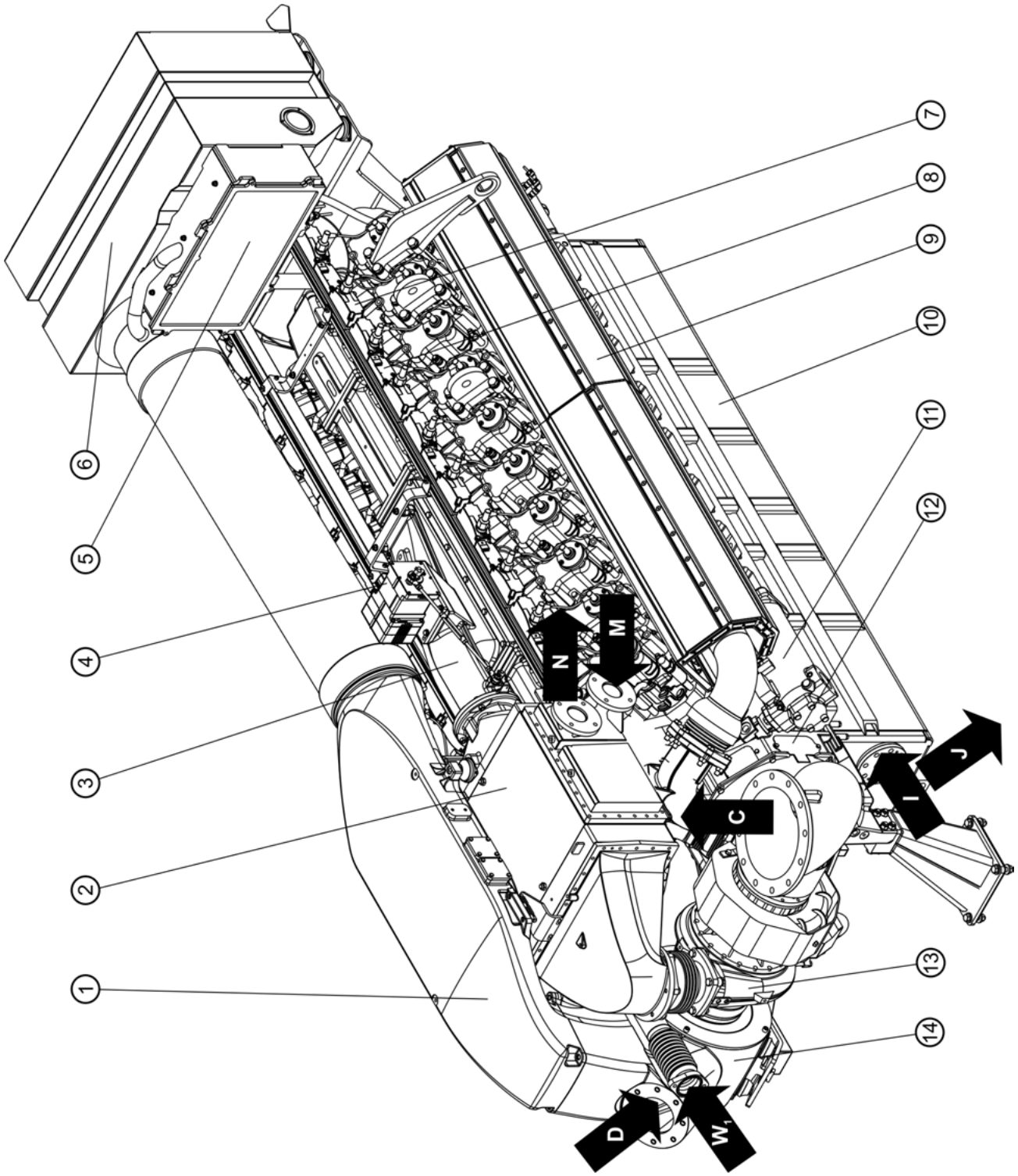

GE Proprietary Information: CONFIDENTIAL! Use or disclosure of data contained on this sheet is subject to the restrictions on the cover or on the first page.

①	Intake air collector	⑧	SAFI (Sensor Actor Function Interface):
②	Heat exchanger mixture/water (1st and 2nd stage)	⑨	Exhaust gas manifold
③	Throttle-valve housing	⑩	Engine oil pan
④	Actuator	⑪	Engine oil filter
⑤	Crankcase ventilation	⑫	Vibration damper with protective cage
⑥	Intake air filter	⑬	Exhaust gas turbocharger
⑦	Ignition coil	⑭	Air-gas mixture collector

GE Proprietary Information: CONFIDENTIAL! Use or disclosure of data contained on this sheet is subject to the restrictions on the cover or on the first page.

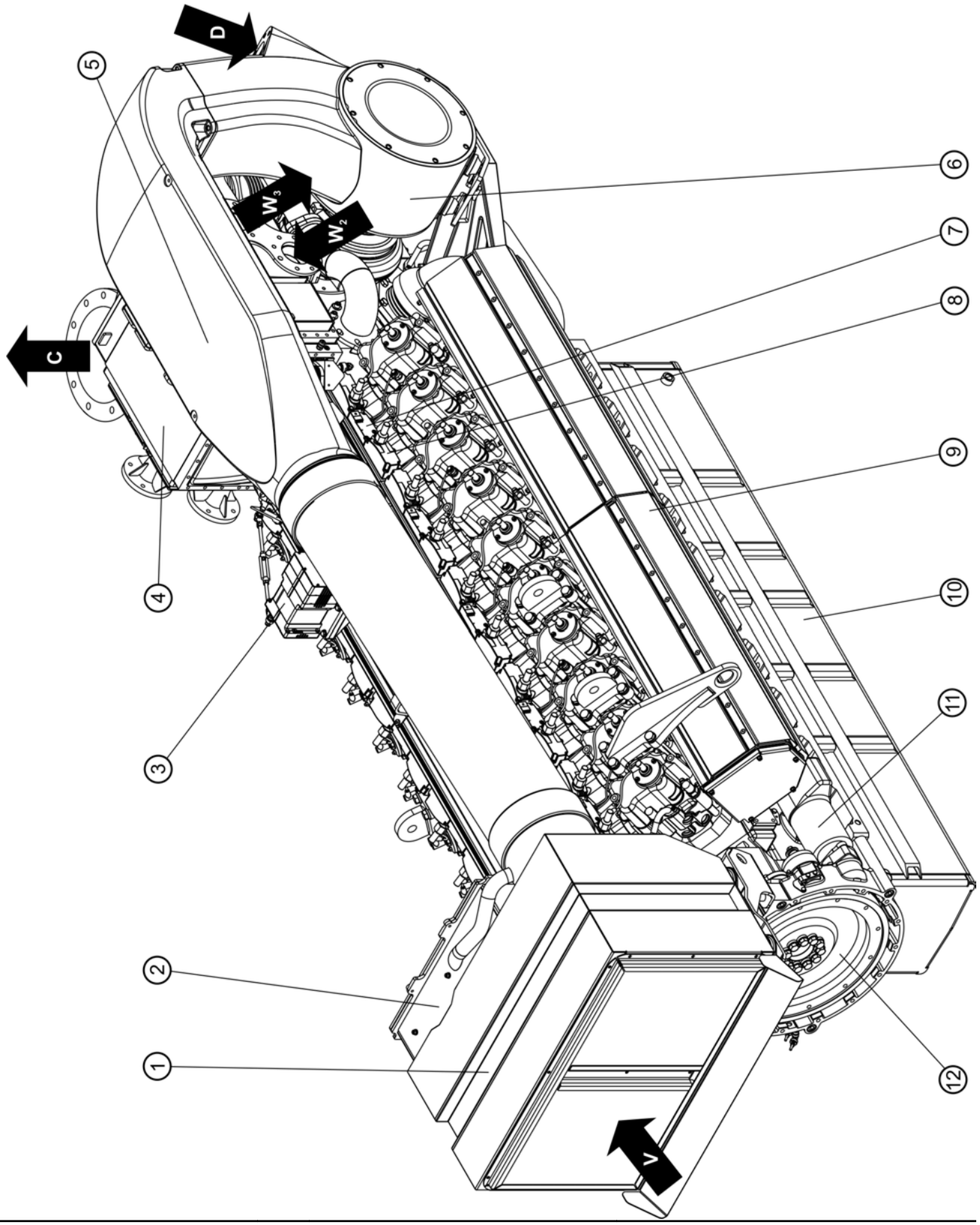

GE Proprietary Information: CONFIDENTIAL! Use or disclosure of data contained on this sheet is subject to the restrictions on the cover or on the first page.

①	Intake air filter	⑦	SAFI (Sensor Actor Function Interface):
②	Crankcase ventilation	⑧	Ignition coil
③	Actuator	⑨	Exhaust gas manifold
④	Heat exchanger mixture/water (1st and 2nd stage)	⑩	Engine oil pan
⑤	Intake air collector	⑪	Starter
⑥	Air-gas mixture collector	⑫	Flywheel

GE Proprietary Information: CONFIDENTIAL! Use or disclosure of data contained on this sheet is subject to the restrictions on the cover or on the first page.

1 Engine oil system 1
1.1 Crankcase engine oil circuit 2
1.2 Engine oil supply to exhaust gas turbocharger 2
2 Automatic topping up of engine oil 2

1 Engine oil system

The mechanical toothed gear pump (engine oil pump) sucks engine oil from the engine oil pan and passes it under pressure through an external line to the engine oil cooler.

In the engine oil cooler (engine oil/water heat exchanger), the thermal energy of the engine oil is transferred to the water circuit.

After the oil has passed through the oil cooler, it is cleaned in the oil filter, from where it is then passed on to the lubricating points.

An engine oil pressure valve has been installed to adjust the engine oil pressure.

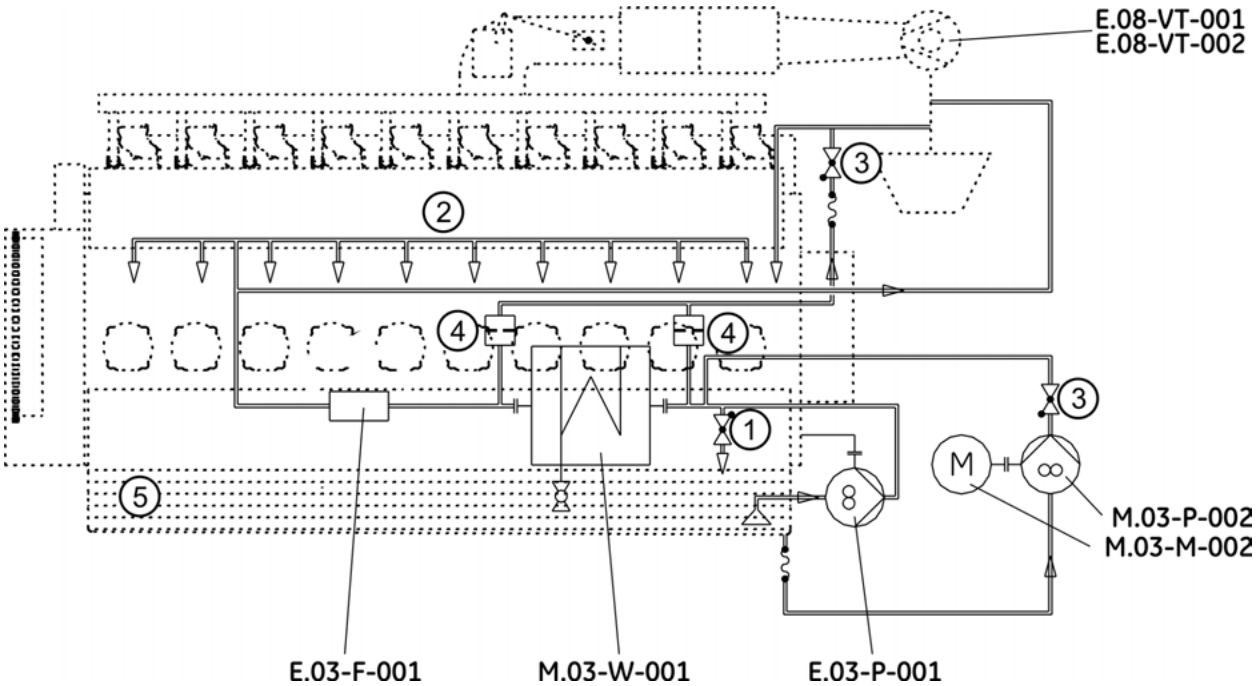

E.03-F-001	Engine oil filter |filter (lubricating oil for set)
M.03-W-001	Oil/water | heat exchanger (engine lubricating oil)
E.03-P-001	Mechanical engine oil pump | pump (engine lubricating oil)
M.03-M-002	Engine oil pump - AC preliminary lubrication + continued cooling | engine (lubricating oil for set)
M.03-P-002	Engine oil pump - AC preliminary lubrication + continued cooling | pump (lubricating oil for set)
E.08-VT-001 **E.08-VT-002**	Exhaust gas turbocharger | compressor (air/fuel gas mixture engine)

GE Proprietary Information: CONFIDENTIAL! Use or disclosure of data contained on this sheet is subject to the restrictions on the cover or on the first page.

1	Engine oil pressure relief valve	4	Throttle (venting system)
2	Main engine oil duct	5	Engine oil pan
3	Non-return valve		

1.1 Crankcase engine oil circuit

The cooled and cleaned engine oil is fed to the left and right main engine oil ducts in the crankcase via a duct in the casing cover (damper side).

The crankshaft main bearings are supplied with engine oil through vertical bores in the crankcase via the left and right main engine oil ducts.

Engine oil is then distributed from the crankshaft main bearings to the big-end bearings via bores in the crankshaft.

The camshaft bearings and the timing gear are also supplied with engine oil via the left and right main engine oil ducts.

Piston cooling

Oil is supplied to the piston cooling nozzles directly via the left and right engine oil ducts.

1.2 Engine oil supply to exhaust gas turbocharger

The exhaust gas turbocharger is connected to the engine oil circuit by external lines.

If the gas engine is switched off, an electrical pump supplies the exhaust gas turbocharger with engine oil for 15 minutes.

The exhaust gas turbocharger is connected to the engine oil circuit by external lines.

If the gas engine is switched off, an electrical pump supplies the exhaust gas turbocharger with engine oil for 20 minutes.

Pre-start-up lubricating pump (1x direct current 24 V, 1.5 kW)

Pump operating time > 1 minute before every start.

When the engine speed of 800 rpm is exceeded, the pump(s) is (are) switched off. If the module has been switched off, the pump will continue to operate for another 20 minutes to cool down the turbocharger.

2 Automatic topping up of engine oil

The oil pan engine oil level can be read off at the inspection glass for engine oil level monitoring. If the oil level drops below a fixed minimum value, then the solenoid valve opens and fresh oil flows from the fresh oil tank into the oil pan. The solenoid valve closes when the oil level reaches a fixed upper limit.

GE Proprietary Information: CONFIDENTIAL! Use or disclosure of data contained on this sheet is subject to the restrictions on the cover or on the first page.

Engine oil :

J — Engine oil drain (connection to used oil tank)

I — Engine oil refill (connection to fresh oil tank)

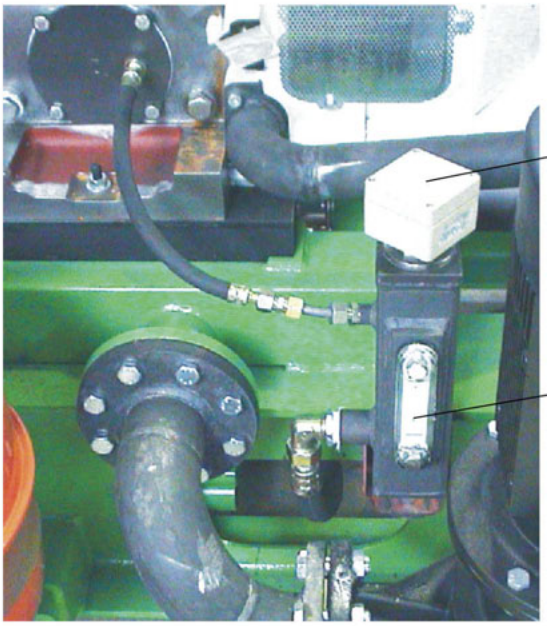

GE Proprietary Information: CONFIDENTIAL! Use or disclosure of data contained on this sheet is subject to the restrictions on the cover or on the first page.

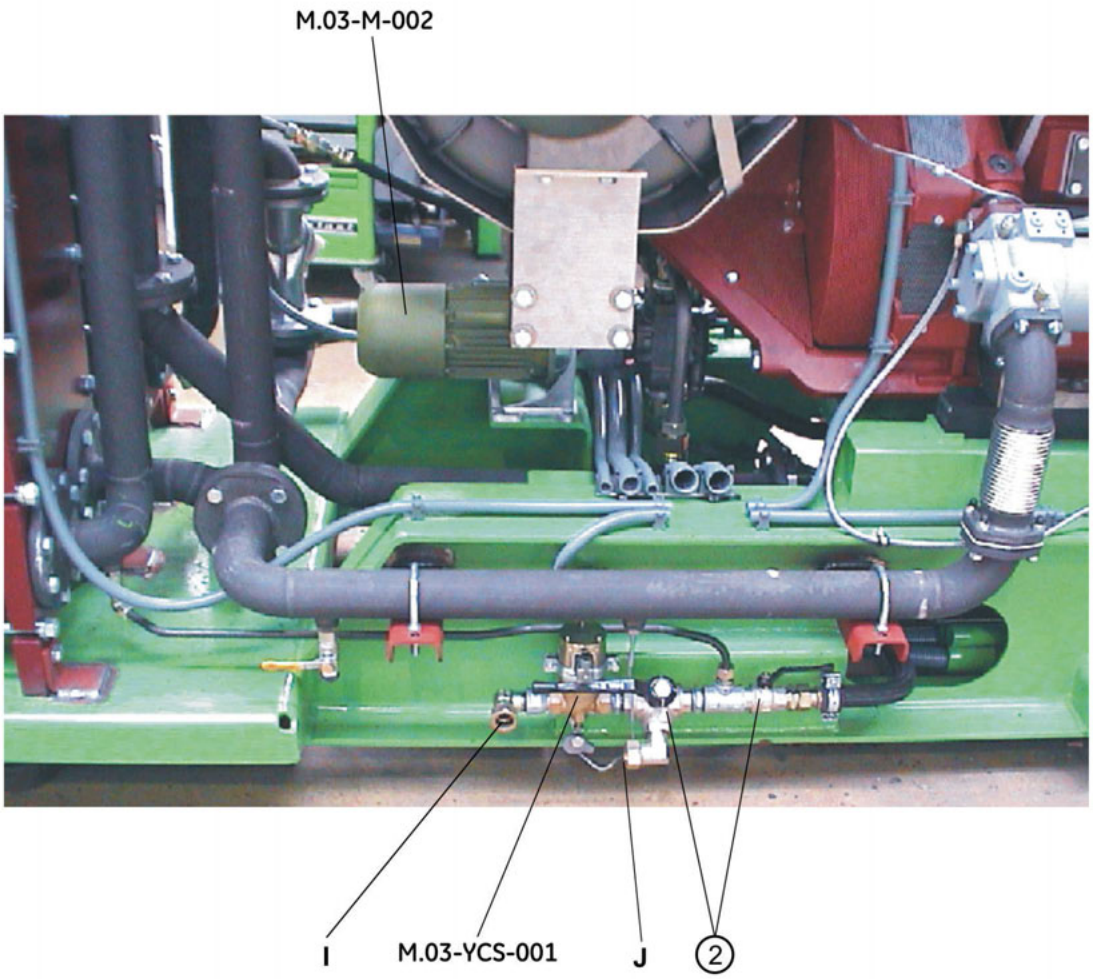

M.03-LI-001	Engine oil level in the oil pan | level sensor (lubricating oil for set)		
M.03-YCS-001	Solenoid valve - automatic engine top-up | valve open/shut (lubricating oil for set)		
1	inspection glass		
2	ball valve		

GE Proprietary Information: CONFIDENTIAL! Use or disclosure of data contained on this sheet is subject to the restrictions on the cover or on the first page.

1 Engine cooling water circuit 1
2 mixture cooling circuit 2
3 Engine cooling water preheating 3

1 Engine cooling water circuit

The electrical pump pumps the engine cooling water into the cooling jacket of the cylinder block through two external lines (left and right engine side).

The cylinder heads are supplied with cooling water via vertical bores. Water flows through the cylinder heads, cools them and is then fed back to the pump via the engine cooling water return line.

Key to Figure:

W — Engine cooling water, engine cooling water entering

W1 — Engine cooling water exiting

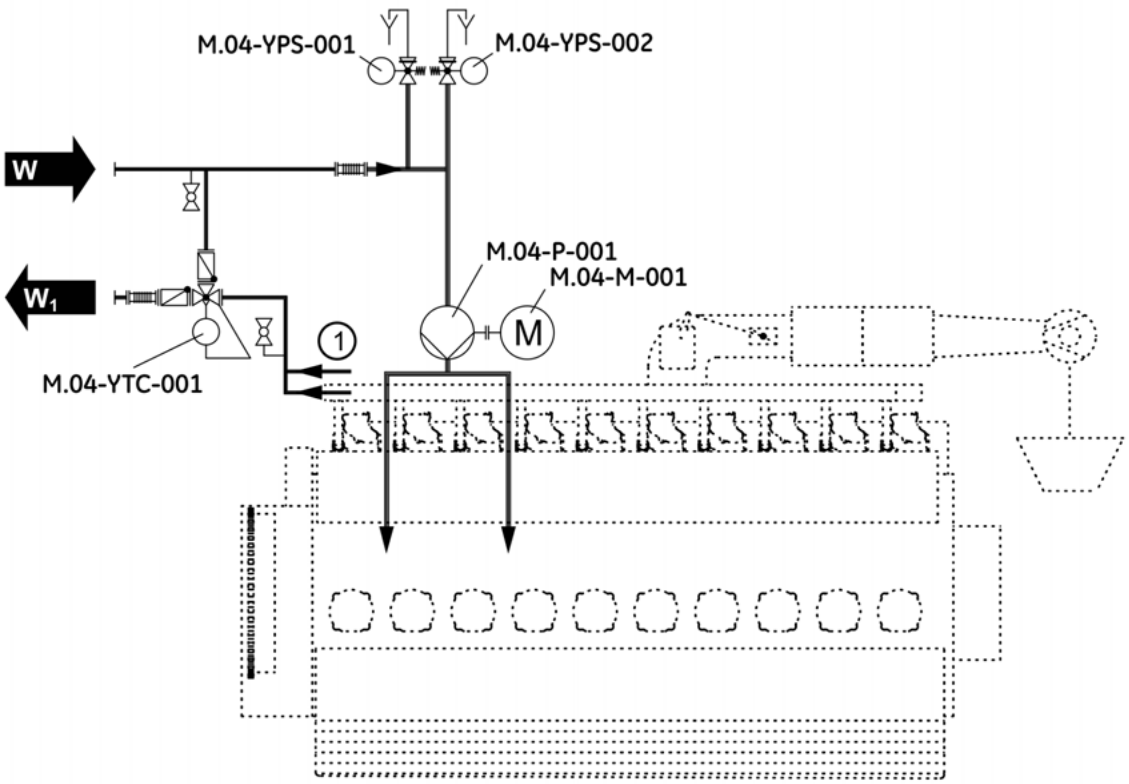

Cooling water system diagram

GE Proprietary Information: CONFIDENTIAL! Use or disclosure of data contained on this sheet is subject to the restrictions on the cover or on the first page.

M.04-YPS-001 **M.04-YPS-002**	Safety valve (cooling water for set)
M.04-YTC-002	Temperature control valve (cooling water for set)
M.04-M-001	Electrical engine cooling water pump | engine (engine cooling water-engine)
M.04-P-001	Electrical engine cooling water pump | pump (engine cooling water)
①	Engine cooling water return line

2 mixture cooling circuit

In engines of this performance class, the air-gas mixture must be cooled to a maximum temperature of 50 °C. The mixture cooler is designed with 2 stages, with the 2nd stage being cooled with cold water of approx. 40 °C. Depending on local preconditions, the heat exchangers (mixture / water) can be connected as follows:

Key to Figure:

Water entering (mixture/water heat exchanger stage 2)

Water exiting (mixture/water heat exchanger stage 2)

Water entering (mixture/water heat exchanger stage 1)

Water exiting (mixture/water heat exchanger stage 1)

① Mixture

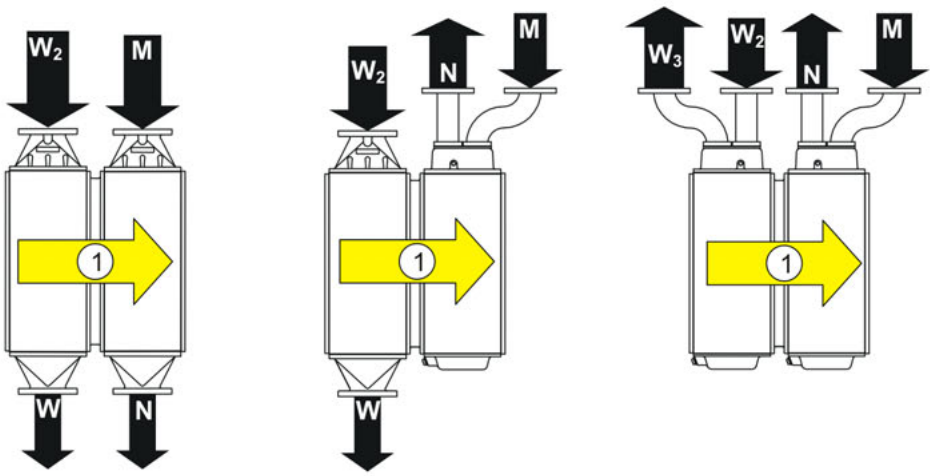

GE Proprietary Information: CONFIDENTIAL! Use or disclosure of data contained on this sheet is subject to the restrictions on the cover or on the first page.

3 Engine cooling water preheating

Pre-heating the engine cooling water allows the engine to be put under load immediately after the engine is started.

The engine cooling water is heated to approx. 60°C.

This can be achieved either by an electric heater unit or a heat exchanger (hot water or vapour).

An electric pump is used to ensure that the warm cooling water is circulated around the engine's water rooms.

Key to Figure:

W — Engine cooling water, engine cooling water entering

W_1 — Engine cooling water exiting

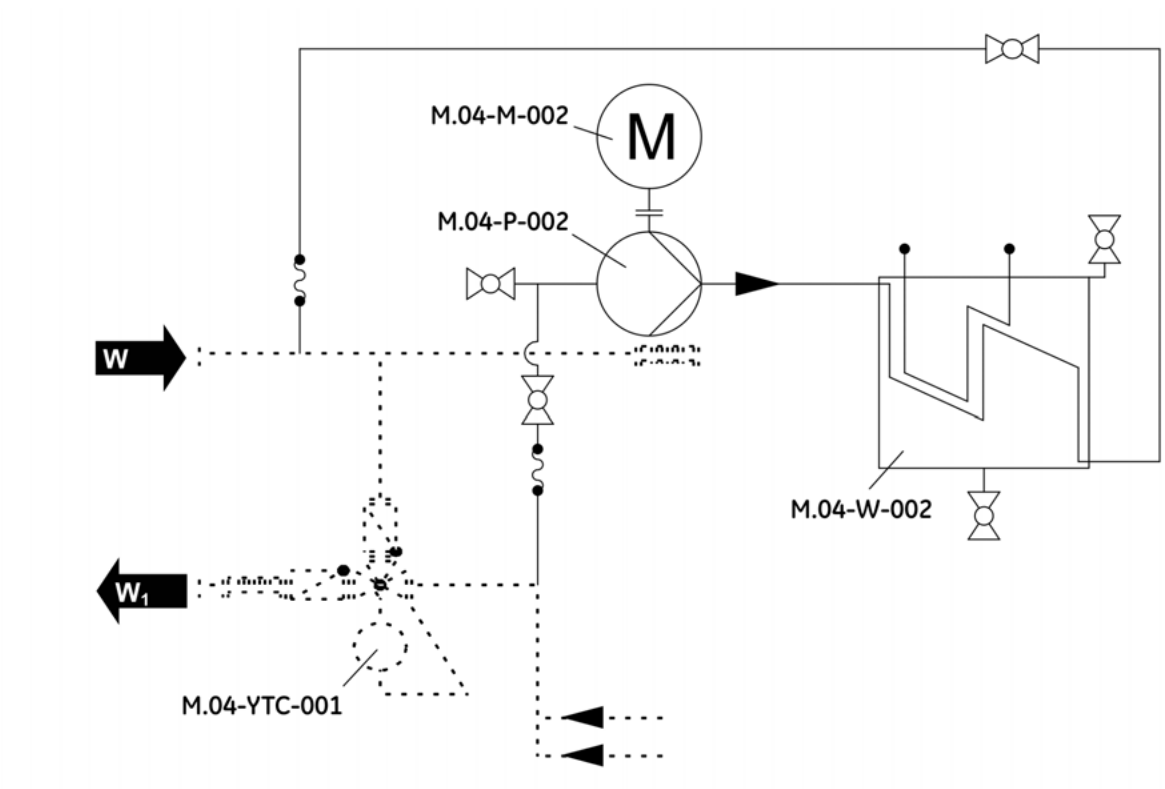

Cooling water pre-heating system diagram

M.04-M-002	Engine cooling water preheating | engine (cooling water for set)
M.04-P-002	Engine cooling water preheating | pump (cooling water for set)

GE Proprietary Information: CONFIDENTIAL! Use or disclosure of data contained on this sheet is subject to the restrictions on the cover or on the first page.

M.04-W-002	Heater unit | heat exchanger (cooling water for set)
M.04-YTC-001	Temperature control valve (cooling water for set)

The cooling water pre-heating system is not an alternative to antifreeze additive in the cooling water!

GE Proprietary Information: CONFIDENTIAL! Use or disclosure of data contained on this sheet is subject to the restrictions on the cover or on the first page.

1 General description

Fuel gas is mixed via the gas quantity controller into the intake air and then fed to the exhaust gas turbocharger through a line. Once it has passed through the exhaust gas turbocharger, the compressed gas/air mixture flows through the mixture cooler (heat exchanger mixture / water).

The gas/air mixture is then fed through the throttle valve. This valve controls the flow into the intake lines. The mixture is distributed via the intake lines to the cylinders.

2 Exhaust gas turbocharger bypass

The exhaust gas turbocharger bypass connects the pressure side and the suction side of the intake pressure charging system (exhaust gas turbocharger). Throughput is controlled by electrically operated valves.

The exhaust gas turbocharger bypass has two functions. Firstly, it is designed to protect the exhaust gas turbocharger against the effects of pumping, and secondly it is used to control the power output during operation, as a result of which the level of control can be significantly improved.

3 Schematic diagram – fuel gas system

Fuel gas:

Fuel gas entry

Number	Description
P.01-YCI-103	Fuel gas controller - gas train 1 (fuel gas system)
E.05-F-001	Intake air filter (air - engine)
M.05-PID-001	Differential pressure sensor (plant ventilation system)
E.08-VT-001	Exhaust gas turbocharger (air/fuel gas mixture - engine)
E.08-YCI-02	Throttle valve (air/fuel gas mixture - engine)
E.08-W-001 **E.08-W-002**	Heat exchanger - mixture/water (air/fuel gas mixture - engine)
E.08-YCI-001	Throttle valve (air/fuel gas mixture - engine)
1	Intake line

GE Proprietary Information: CONFIDENTIAL! Use or disclosure of data contained on this sheet is subject to the restrictions on the cover or on the first page.

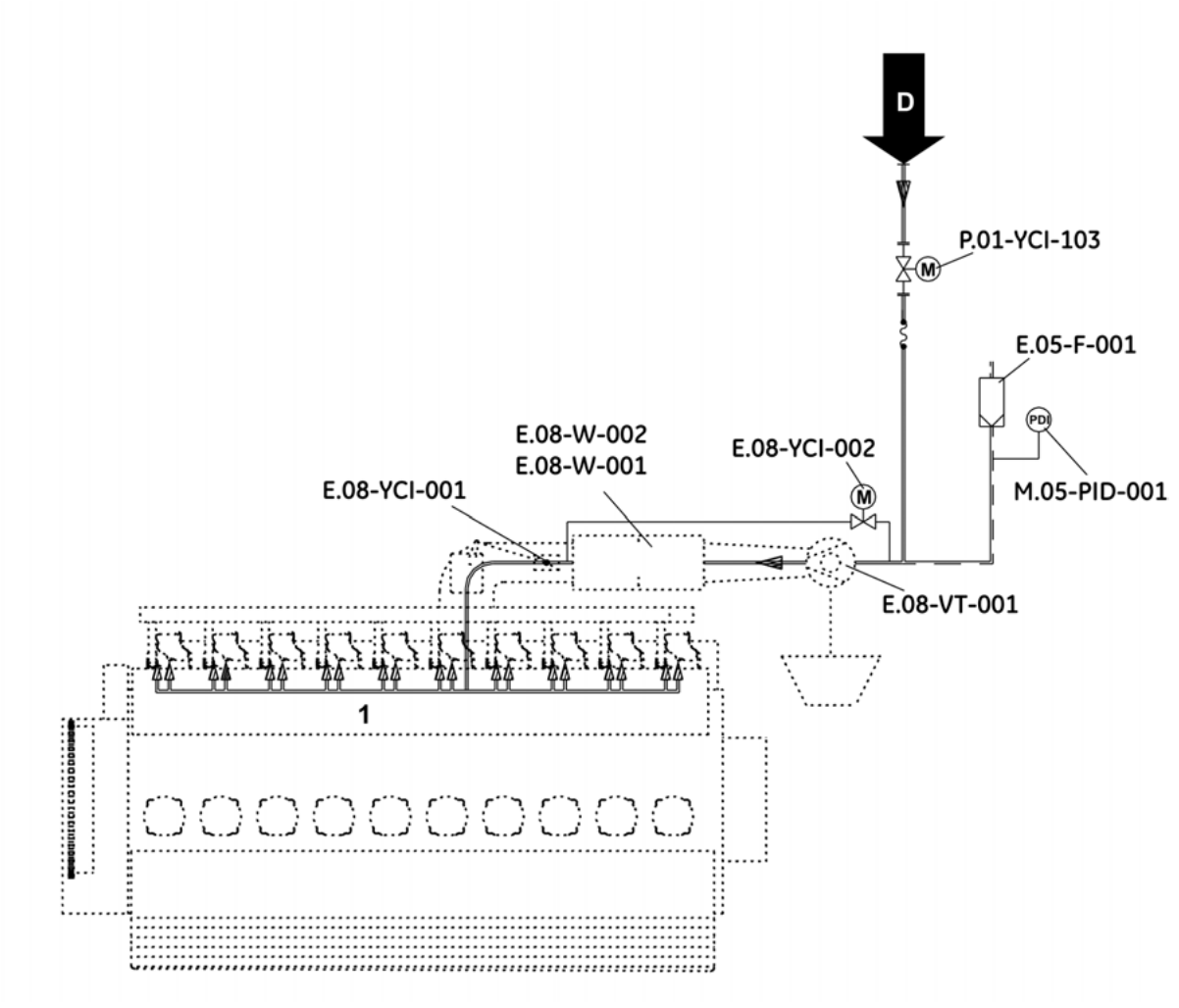

GE Proprietary Information: CONFIDENTIAL! Use or disclosure of data contained on this sheet is subject to the restrictions on the cover or on the first page.

1 Power and degrees of efficiency

Q_{zu}/Q_m	Energy supplied/mechanical	±5%	BTU/bhp.hr	6281
p_{me}	Effective mean pressure		psi	232
P_m	Mechanical power Blocked ISO standard power ICFN according to ISO 3046		Bhp	1966
P_{el}	Electric power output at cos phi = 1		kW	1426
η_{el}	Electrical efficiency		%	39,4
η_{therm}	Therm. efficiency		%	---
η_{ges}	Total efficiency		%	39,4

2 Standard reference conditions

Air pressure	psi	15.5*)
Air temperature	°F	77
Relative humidity	%	30

*) or 100 m above mean sea level

3 Exhaust system

M_{af}	Exhaust gas volume moist	---	lbs/hr	18759
L_P	Residual sound pressure level when operating a module	dB (A) at 10m distance		65
NO_x	Nitrogen oxide	mg/Nm^3 2)		250
CO	Carbon monoxide	mg/Nm^3 2)		1000
NMHC[1)]	Non-methane hydrocarbons	mg/Nm^3 2)		150

1) At a total installation emission of > 3 kg/h.

The exhaust gas emission values refer to dry exhaust gas with 5% O_2, in standard reference conditions, during which the gas engine should, at the very least, be operated at half load.

2) Exhaust gas emission values expressed in mg/m3 for dry exhaust gas, in standard reference conditions, with 5% O_2.

4 Fuel gas system

Mz	methane number			100-135
Hu	Net calorific value	BTU/scft		500
V_{gas}	Fuel gas volume	---	scfhr	24697

GE Proprietary Information: CONFIDENTIAL! Use or disclosure of data contained on this sheet is subject to the restrictions on the cover or on the first page.

5 Water circuit

V_{ww}	Cooling Water	---	GPM	168,2
V_{gk}	Mixture cooling water	---	GPM	88,1

6 Intake air

V_l	intake air volume	---	scfm	3784

7 Energy balances

					Ambient temperature	104 °F	--- °F
Q_{ag}	Heat exchanger exhaust gas / water	--- °C	±8%	MBTU/hr		0	---
Q_{gk1}	Heat exchanger mixture / water (stage 1)		±8%	MBTU/hr		779	---
Q_{gk2}	Heat exchanger mixture / water (stage 2)		±8%	MBTU/hr		396	---
Q_{getr}	Gearbox		---	kWh		---	---
Q_{kW}	Heat exchanger engine cooling water / water		±8%	MBTU/hr		1346	---
Q_{oel}	Heat exchanger engine oil / water		±8%	MBTU/hr		584	---
Q_{re}	Residual heat		---	MBTU/hr		123	---
Q_{st}	Radiation heat (engine and generator)		---	MBTU/hr		374	---
Q_{ww}	Total usable thermal output		±8%	MBTU/hr		2709	0

8 Temperatures

Hot water return temperature (technical diagram **A**)	+ 0 -41	°F	165,2
Hot water inlet temperature (technical diagram **B**)	+ --- - ---	°F	201,2
Water entering (heat exchanger mixture/water; stage 2) (technical diagram **M**)	+ --- - ---	°F	131
Outlet temperature (heat exchanger mixture / water, stage 2) (Technical diagram **N**)	+ --- - ---	°F	141

9 Weight

$M_{ges\ tr}$	Total engine weight (dry) (Module Container)	lbs	---
$M_{ges\ gf}$	Total engine weight (filled) (Module Container)	lbs	~75000
$M_{Mot\ tr}$	Engine weight dry	lbs	---
$M_{Mot\ gf}$	Engine weight filled	lbs	---

GE Proprietary Information: CONFIDENTIAL! Use or disclosure of data contained on this sheet is subject to the restrictions on the cover or on the first page.

M_{Aggr}	Module weight [1]	lbs	---
$M_{Gen + Getr}$	Weight of generator and gearbox	lbs	---
M_{Gen}	Generator weight	lbs	---

[1] In type 6 engines (version E), the generator is mounted on a separate frame. Its weight is therefore not included in this value.

10 Dimensions

Length	inch	~500
Width	inch	~120
Height	inch	~200

11 Lacquer coat

L_{Mot}	Engine	RAL No.	6018
L_{Gen}	Generator	RAL No.	6018
L_{Fra}	Frame	RAL No.	6018
L_{Con}	Container	RAL No.	7035
L_{Sch}	Switch cabinet	RAL No.	7035

The operating materials and system peripherals must conform to TI 1100-0110 "Requirements for GE Jenbacher Gas Engines".

GE Proprietary Information: CONFIDENTIAL! Use or disclosure of data contained on this sheet is subject to the restrictions on the cover or on the first page.

1 Key to module drawings and technical diagram 1
1.1 Standards and technical specifications 1
1.2 Connections 1
1.3 Key to lines and components 3
1.3.1 Key to components 4
1.3.2 Key to lines 6
1.4 GE Jenbacher - Tag number 6
1.4.1 System 6
1.4.2 Circuit 7
1.4.3 Type 8
1.4.4 Number 9
1.4.5 Part 9
1.5 Component identification 9
1.5.1 Equipment, valves 9
1.5.2 Fittings 10
1.6 Process functions 10
1.7 Installation components 11

1 Key to module drawings and technical diagram

1.1 Standards and technical specifications

The following standards and technical specifications, among others, have been taken into account for the representations in technical diagrams and installation diagrams

DIN 2429-1	Symbolic representation of pipework components for use on engineering drawings; basic requirements
DIN 2429-2	Symbolic representation of pipework components for use on engineering drawings; functional representation
DIN 2481	Thermal power plants; graphical symbols
DIN 19227	Graphical symbols and identifying letters for process control engineering: symbolic representation for functions
DIN ISO 16016	Technical product documentation - Protection notices for restricting the use of documents and products
DIN EN ISO 10628	Flow diagrams for process plants - General rules (ISO 10628:1997), German version EN ISO 10628:2000
IEC PAS 62424	Representation of process control engineering requests in P&I diagrams and data exchange to PCE-CAE tools

1.2 Connections

Different letters are used to identify different media (e.g. D = fuel gas entry). In some cases, a digit is added to the letter to give even more detailed information.

The same systematics are used in the technical diagram to indicate any media entering or exiting.

GE Proprietary Information: CONFIDENTIAL! Use or disclosure of data contained on this sheet is subject to the restrictions on the cover or on the first page.

Fuel gas:	D	Fuel gas entry
	T	Fuel gas entering (pre-combustion chamber gas supply line)
	U	Exhaust, breather and air-bleed lines in the fuel gas
Intake air:	V	Intake air
Water:	A	Hot water input
	B	Hot water output
	E	Discharge
	F	Condensation drain
	G	Safety valve (engine cooling water circuit or mixture cooling water circuit)
	H	Safety valve (hot water circuit)
	L	Filling connection (engine cooling water circuit or mixture cooling water circuit)
	M	Water entering (mixture/water heat exchanger stage 2)
	N	Water exiting (mixture/water heat exchanger stage 2)
	P	water entering (fuel gas preheating)
	Q	water exiting (fuel gas preheating)
	R	Raw water input
	S	Raw water output
	W	Engine cooling water, engine cooling water entering
	W_1	Engine cooling water exiting

GE Proprietary Information: CONFIDENTIAL! Use or disclosure of data contained on this sheet is subject to the restrictions on the cover or on the first page.

	W_2	Water entering (mixture/water heat exchanger stage 1)
	W_3	Water exiting (mixture/water heat exchanger stage 1)
Engine oil :	I	Engine oil refill (connection to fresh oil tank)
	J	Engine oil drain (connection to used oil tank)
	O	Engine oil exiting (to engine oil/water heat exchanger)
	O_1	Engine oil entering (from engine oil/water heat exchanger)
Exhaust gas:	C	Exhaust gas outlet
	C_2	Exhaust gas inlet

1.3 Key to lines and components

The following list contains a selection of the symbols used in the technical diagram. In addition, the symbolic representations are accordance with DIN 2481 and DIN 19227-1 apply.

GE Proprietary Information: CONFIDENTIAL! Use or disclosure of data contained on this sheet is subject to the restrictions on the cover or on the first page.

1.3.1 Key to components

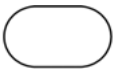
processed on-site, on the module

in the central control system

processing interconnected with the control system

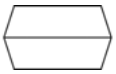
IEC inspections

Non-return valve

Ball valve

Compensator

3-way valve

JENBACHER **I**nterface

GE Jenbacher limit of supply, and/or GE Jenbacher scope of supply

Pressure expansion vessel

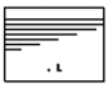
Oil reservoir

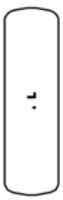
Pressure vessel, gas

Piston

Catalytic converter

Codibox

GE Proprietary Information: CONFIDENTIAL! Use or disclosure of data contained on this sheet is subject to the restrictions on the cover or on the first page.

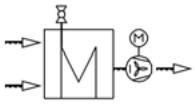

Single-circuit table cooler

Dual-circuit table cooler

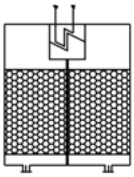

Thermal reactor

Air-cooled compressor

Condensate separator

Cooling tower

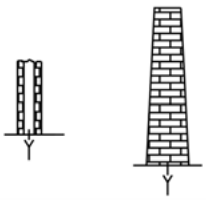

Chimney

5-way valve

4-way valve

Explosion protection valve

GE Proprietary Information: CONFIDENTIAL! Use or disclosure of data contained on this sheet is subject to the restrictions on the cover or on the first page.

1.3.2 Key to lines

- Air
- Fuel gas
- Exhaust gas
- Crankcase ventilation
- Engine cooling water / hot water
- Raw water
- Engine oil
- Control oil
- Control impulse

1.4 GE Jenbacher - Tag number

The GE Jenbacher tag numbers are based on a logical combination of alphanumeric blocks. This number provides general information on the component's position and function. More detailed information can be found in the technical diagram and circuit diagram.

TheGE Jenbacher tag number consists of 5 such blocks.

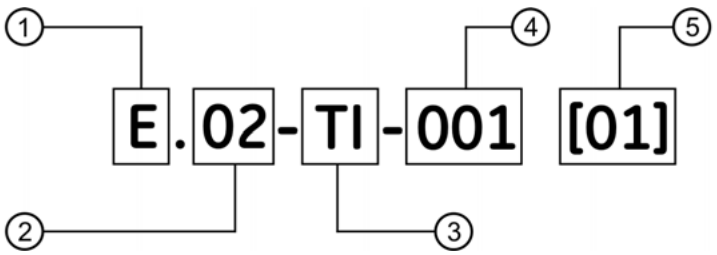

①	System	④	Number
②	Circuit	⑤	Part
③	Type		

1.4.1 System

Letters	Description
E	Engine
M	Module
O	ORC

GE Proprietary Information: CONFIDENTIAL! Use or disclosure of data contained on this sheet is subject to the restrictions on the cover or on the first page.

Letters	Description
P	System
G	Generator

1.4.2 Circuit

Letters	Designation
00	Engine block
01	Fuel gas
02	Exhaust gas
03	Lubricating oil
04	Cooling water
05	Air
06	High temperature circuit
07	Low temperature circuit
08	Air/Fuel-gas mixture
09	Emergency cooling
10	Customised
11	Thermo oil
12	ORC high-temperature circuit
13	ORC low-temperature circuit
14	Pre-combustion chamber gas system
15	Nitrogen purging installation
16	Thermal reactor
17	Ventilation system
18	Transmission+accessories
19	Activated carbon
20	TSA
21	Water (external source)
22	Generator rotor
23	Generator stator
24	Chemicals
25	Steam
26	Waste water
27	Cooling tower circuit
28	Hot water
29	Urea solution
30	Combustion air
31	Starter air
32	Control air
33	Service air

GE Proprietary Information: CONFIDENTIAL! Use or disclosure of data contained on this sheet is subject to the restrictions on the cover or on the first page.

Letters	Designation
34	Fresh oil / waste oil
35	Water/oil mixture
36	Dirty water
37	Cooling water

1.4.3 Type

Letters	Description
A	Generator
AI	Vibration sensor
B	Container
DS	Steam boiler
DV	Consumer (customer)
EI	Ignition Control
F	Filter
FC	Frequency converter
FI	Flow indicator
FL	Flow limiter
FQ	Flow meter
FS	Flow switch
GL	Inspection glass
JI	Analysis equipment
KH	Ball valve
KHF	Ball valve with spring return
LI	Level sensor
LS	Level switch
M	Engine
NS	Engine On/Off
NC	Engine frequency controlled
P	Pump
PDS	Differential-pressure switch
PI	Pressure control
PID	Differential pressure sensor
PS	Pressure switch
QC	Volumeter
QQ	Calorimeter
S	Switch
SI	Pickup
TC	Temperature control
TI	Temperature control

GE Proprietary Information: CONFIDENTIAL! Use or disclosure of data contained on this sheet is subject to the restrictions on the cover or on the first page.

Letters	Description
TS	Temperature switch
US	Leak testing
USZ	Ignition
VB	Fan
VT	Compressor
W	Heat exchanger
XCO	Compensator
XFH	Hose
XSA	Silencer
Y	Driving motor (piston machine)
YCI	Valve with position controller
YCS	Valve Open/Closed
YCZ	Valve Open/Closed safety relevant
YFA	Flame disruption protection
YFC	Bundle control valve/Shut-off valve
YPC	Filling valve
YPS	Safety valve
YRC	Non-return valve
YTC	Temperature control valve
YVD	Fuel gas regulator

1.4.4 Number

The 3-digit is used to clearly identify the component on the installation.

1.4.5 Part

Components that are installed more than once are considered parts. This guarantees their identity on the installations.

1.5 Component identification

All components are identified as per the diagram. For purposes of identification, two methods are used.

1.5.1 Equipment, valves

Marking on the component. The Tag number is written in a line.

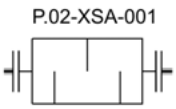

Example: Exhaust silencer marking

GE Proprietary Information: CONFIDENTIAL! Use or disclosure of data contained on this sheet is subject to the restrictions on the cover or on the first page.

P	System (installation)
02	Circuit (exhaust gas)
XSA	Type (silencer)
001	Number

1.5.2 Fittings

Marking of fittings in bubbles on the component. The first line describes component type and function. The second line contains information on position and identity.

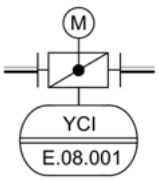

Example: Shut-off valve marking

E	System (engine)
08	Circuit (air/fuel-gas mixture)
YCI	Type (valve with position controller)
001	Number

1.6 Process functions

The letters H and L as a PCE process function designate the upper or lower limits and are used in combination with A, S or Z. S or Z designate an automatic process. A is used for an operator action when a set limit is reached. Each level (e.g. H, HH, HHH) can be combined with an alarm and a switching function (e.g. AS or AZ). The switching point positions are next to the respective bubbles.

LLL or HHH	➔	Level 3
LL or HH	➔	Level 2
L or H	➔	Level 1

A	➔	Triggers an alarm
Z	➔	Triggers a safety-relevant action
S	➔	Describes a switching point

GE Proprietary Information: CONFIDENTIAL! Use or disclosure of data contained on this sheet is subject to the restrictions on the cover or on the first page.

Example: Pressure measurement with High Alarm and Low and Low-Low alarms with switching points

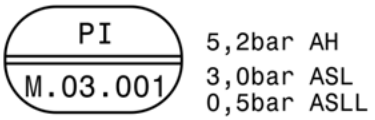

If a pressure of 5.2 bar is exceeded, an alarm message appears on the DIANE control system. If the pressure drops below 0.5 bar, an error message is output in the control system, and the engine is shut down.

Example: Temperature measurement with signal input and five switching points

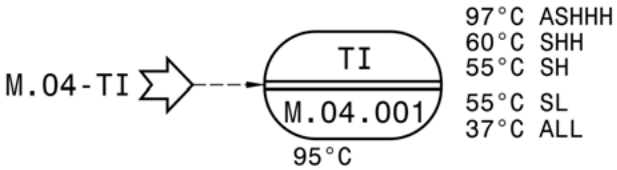

The temperature sensor is set to a default value of 95°C. With a rising temperature, the 37°C ALL switching point issues the automatic start release. If the temperature is reached by the engine cooling water cooling down, the control system issues a warning with "Engine cooling water temperature at minimum". At 55°C SL (falling), the preheating is switched on. At 55°C SH (rising), the load release is given for starting the engine. When the switching point of 60°C is reached, preheating is switched off. A shutdown and an alarm in the control system occur at the 97°C ASHHH switching point. If additional signals are included in a measurement, they are added to the temperature measuring point or the bubble via a signal line.

Example: Thermostatic control valve

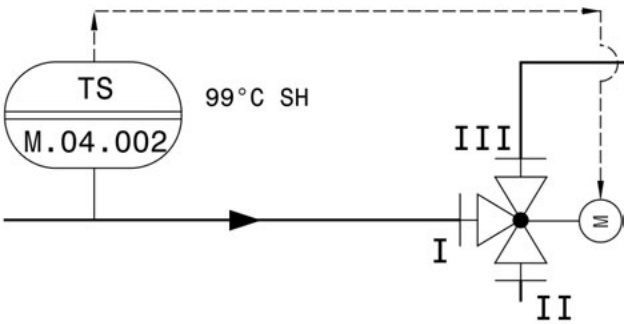

This thermostatic valve is controlled by a temperature sensor. If the 99°C SH switching point is reached, an alarm is given on DIANE.

1.7 Installation components

The components installed in this installation are shown in the Technical Diagram and the installation diagrams, which are numbered using the GE Jenbacher TAG system. The purpose of this table is to describe these components and provide the link to the schematic diagram.

GE Proprietary Information: CONFIDENTIAL! Use or disclosure of data contained on this sheet is subject to the restrictions on the cover or on the first page.

Abbreviation	Circuit diagram				Description	Remark
	Section	Page	Path	el. designation		
E.00-A-001					Generator (Engine block - Engine)	
E.00-AI-101 [01]					Vibration sensor (Engine block - Engine)	Knock sensor
E.00-AI-101 [02]					Vibration sensor (Engine block - Engine)	Knock sensor
E.00-AI-101 [03]					Vibration sensor (Engine block - Engine)	Knock sensor
E.00-AI-101 [04]					Vibration sensor (Engine block - Engine)	Knock sensor
E.00-AI-101 [05]					Vibration sensor (Engine block - Engine)	Knock sensor
E.00-AI-101 [06]					Vibration sensor (Engine block - Engine)	Knock sensor
E.00-AI-101 [07]					Vibration sensor (Engine block - Engine)	Knock sensor
E.00-AI-101 [08]					Vibration sensor (Engine block - Engine)	Knock sensor
E.00-AI-101 [09]					Vibration sensor (Engine block - Engine)	Knock sensor
E.00-AI-101 [10]					Vibration sensor (Engine block - Engine)	Knock sensor
E.00-AI-101 [11]					Vibration sensor (Engine block - Engine)	Knock sensor
E.00-AI-101 [12]					Vibration sensor (Engine block - Engine)	Knock sensor
E.00-AI-101 [13]					Vibration sensor (Engine block - Engine)	Knock sensor
E.00-AI-101 [14]					Vibration sensor (Engine block - Engine)	Knock sensor
E.00-AI-101 [15]					Vibration sensor (Engine block - Engine)	Knock sensor
E.00-AI-101 [16]					Vibration sensor (Engine block - Engine)	Knock sensor
E.00-AI-101 [17]					Vibration sensor (Engine block - Engine)	Knock sensor
E.00-AI-101 [18]					Vibration sensor (Engine block - Engine)	Knock sensor

GE Proprietary Information: CONFIDENTIAL! Use or disclosure of data contained on this sheet is subject to the restrictions on the cover or on the first page.

Abbreviation	Circuit diagram				Description	Remark
	Section	Page	Path	el. designation		
E.00-AI-101 [19]					Vibration sensor (Engine block - Engine)	Knock sensor
E.00-AI-101 [20]					Vibration sensor (Engine block - Engine)	Knock sensor
E.00-M-001					Engine (Engine block - Engine)	
E.00-NS-001					Engine On/Off (Engine block - Engine)	
E.00-SI-001	+M1	53	3	+E1-53B13	Pickup (Engine block - Engine)	Crankshaft
E.00-SI-002	+M1	53	5	+E1-53B14	Pickup (Engine block - Engine)	Crankshaft (Reset)
E.00-SI-005	+M1	53	2	+E1-53B12	Pickup (Engine block - Engine)	Camshaft
E.00-USZ-001	+M1	55	0	+E1-55K1	Ignition (Engine block - Engine)	MORIS
E.00-USZ-004					Ignition (Engine block - Engine)	Antiknock control
E.00-Y-001					Driving motor (piston machine) (Engine block - Engine)	
E.02-TI-001 [01]					Temperature control (Exhaust gas - Engine)	Exhaust gas outlet cylinder head
E.02-TI-001 [02]					Temperature control (Exhaust gas - Engine)	Exhaust gas outlet cylinder head
E.02-TI-001 [03]					Temperature control (Exhaust gas - Engine)	Exhaust gas outlet cylinder head
E.02-TI-001 [04]					Temperature control (Exhaust gas - Engine)	Exhaust gas outlet cylinder head
E.02-TI-001 [05]					Temperature control (Exhaust gas - Engine)	Exhaust gas outlet cylinder head
E.02-TI-001 [06]					Temperature control (Exhaust gas - Engine)	Exhaust gas outlet cylinder head
E.02-TI-001 [07]					Temperature control (Exhaust gas - Engine)	Exhaust gas outlet cylinder head
E.02-TI-001 [08]					Temperature control (Exhaust gas - Engine)	Exhaust gas outlet cylinder head
E.02-TI-001 [09]					Temperature control (Exhaust gas - Engine)	Exhaust gas outlet cylinder head
E.02-TI-001 [10]					Temperature control (Exhaust gas - Engine)	Exhaust gas outlet cylinder head
E.02-TI-001 [11]					Temperature control (Exhaust gas - Engine)	Exhaust gas outlet cylinder head
E.02-TI-001 [12]					Temperature control (Exhaust gas - Engine)	Exhaust gas outlet cylinder head

GE Proprietary Information: CONFIDENTIAL! Use or disclosure of data contained on this sheet is subject to the restrictions on the cover or on the first page.

Abbreviation	Circuit diagram				Description	Remark
	Section	Page	Path	el. designation		
E.02-TI-001 [13]					Temperature control (Exhaust gas - Engine)	Exhaust gas outlet cylinder head
E.02-TI-001 [14]					Temperature control (Exhaust gas - Engine)	Exhaust gas outlet cylinder head
E.02-TI-001 [15]					Temperature control (Exhaust gas - Engine)	Exhaust gas outlet cylinder head
E.02-TI-001 [16]					Temperature control (Exhaust gas - Engine)	Exhaust gas outlet cylinder head
E.02-TI-001 [17]					Temperature control (Exhaust gas - Engine)	Exhaust gas outlet cylinder head
E.02-TI-001 [18]					Temperature control (Exhaust gas - Engine)	Exhaust gas outlet cylinder head
E.02-TI-001 [19]					Temperature control (Exhaust gas - Engine)	Exhaust gas outlet cylinder head
E.02-TI-001 [20]					Temperature control (Exhaust gas - Engine)	Exhaust gas outlet cylinder head
E.02-Y-001					Driving motor (piston machine) (Exhaust gas - Engine)	Turbocharger (exhaust gas side)
E.03-F-001					Filter (Lubricating oil - Engine)	Engine oil filter
E.03-P-001					Pump (Lubricating oil - Engine)	Mechanical engine oil pump
E.03-YPC-001					Filling valve (Lubricating oil - Engine)	
E.03-YPS-001					Safety valve (Lubricating oil - Engine)	
E.05-F-001					Filter (Air - Engine)	Intake air filter
E.08-F-001					Filter (Air/Fuel-gas mixture - Engine)	Crankcase ventilation
E.08-PI-001	+M1	36	3	+E1-36B5	Pressure control (Air/Fuel-gas mixture - Engine)	Charge pressure (mixture pressure p2')
E.08-TI-001	+M1	37	2	+E1-37B6	Temperature control (Air/Fuel-gas mixture - Engine)	Mixture temperature t2'
E.08-VT-001					Compressor (Air/Fuel-gas mixture - Engine)	Exhaust-gas turbocharger
E.08-W-001					Heat exchanger (Air/Fuel-gas mixture - Engine)	Heat exchanger (mixture/water)
E.08-W-002					Heat exchanger (Air/Fuel-gas mixture - Engine)	Heat exchanger (mixture/water)
E.08-YCI-001					Valve with position controller (Air/Fuel-gas mixture - Engine)	Throttle valve

GE Proprietary Information: CONFIDENTIAL! Use or disclosure of data contained on this sheet is subject to the restrictions on the cover or on the first page.

Abbreviation	Circuit diagram				Description	Remark
	Section	Page	Path	el. designation		
E.08-YCI-101	+M1	48	0	+E1-48M8	Valve with position controller (Air/ Fuel-gas mixture - Engine)	Electrical control valve - Exhaust-gas turbocharger bypass system
M.03-B-001					Container (Lubricating oil - Module)	Engine oil tank
M.03-KHF-001					Ball valve with spring return (Lubricating oil - Module)	
M.03-LI-001	+M1	38	3	+E1-38B10	Level sensor (Lubricating oil - Module)	Engine oil level in engine oil pan
M.03-M-003	+V1	8	1	+E1-8M10	Engine (Lubricating oil - Module)	Engine oil pump - DC prelubrication + continued cooling
M.03-M-010	+M1	9	6	+E1-9M2	Engine (Lubricating oil - Module)	Engine oil pump - Fresh oil / waste oil
M.03-NS-003					Engine On/Off (Lubricating oil - Module)	
M.03-NS-010					Engine On/Off (Lubricating oil - Module)	
M.03-P-003					Pump (Lubricating oil - Module)	Engine oil pump - DC prelubrication + continued cooling
M.03-P-010					Pump (Lubricating oil - Module)	Engine oil pump - Fresh oil / waste oil
M.03-P-020					Pump (Lubricating oil - Module)	Engine oil pump - Fresh oil / waste oil
M.03-PI-001	+M1	36	0	+E1-36B3	Pressure control (Lubricating oil - Module)	Engine oil pressure
M.03-TI-001	+M1	37	3	+E1-37B7	Temperature control (Lubricating oil - Module)	
M.03-W-001					Heat exchanger (Lubricating oil - Module)	oil / water - Engine oil
M.03-YCS-001	+M1	38	0	+E1-38M6	Valve Open/Closed (Lubricating oil - Module)	Solenoid valve - Automatic topping up of engine oil
M.03-YPC-002					Filling valve (Lubricating oil - Module)	Pressure relief valve - engine oil circuit
M.04-B-001					Container (Cooling water - Module)	Pressure compensation tank
M.04-B-002					Container (Cooling water - Module)	Pressure compensation tank
M.04-M-001	+M1	10	2	+E1-10M2	Engine (Cooling water - Module)	Electric engine cooling water pump (applies to type 2, 4 and 6 engines)
M.04-M-002	+M1	9	1	+E1-9M1	Engine (Cooling water - Module)	Engine cooling water preheating
M.04-NS-001					Engine On/Off (Cooling water - Module)	

GE Proprietary Information: CONFIDENTIAL! Use or disclosure of data contained on this sheet is subject to the restrictions on the cover or on the first page.

Abbreviation	Circuit diagram				Description	Remark
	Section	Page	Path	el. designation		
M.04-NS-002					Engine On/Off (Cooling water - Module)	
M.04-P-001					Pump (Cooling water - Module)	Electric engine cooling water pump (applies to type 2, 4 and 6 engines)
M.04-P-002					Pump (Cooling water - Module)	Engine cooling water preheating
M.04-PI-001	+M1	36	2	+E1-36B4	Pressure control (Cooling water - Module)	Engine cooling-water pressure
M.04-PI-002					Pressure control (Cooling water - Module)	
M.04-TI-001	+M1	37	4	+E1-37B8	Temperature control (Cooling water - Module)	Engine cooling water temperature
M.04-TS-002					Temperature switch (Cooling water - Module)	Engine cooling water temperature - Safety temperature switch max.
M.04-W-002					Heat exchanger (Cooling water - Module)	Heating unit
M.04-YCS-001	+M1	11	5	+E1-11M3	Valve Open/Closed (Cooling water - Module)	Solenoid valve - Auxiliary engine cooling water pump (bypass)
M.04-YFC-001					Bundle control valve/Shut-off valve (Cooling water - Module)	
M.04-YPC-001					Filling valve (Cooling water - Module)	
M.04-YPS-001					Safety valve (Cooling water - Module)	Filling connection (engine cooling water circuit or mixture cooling water circuit)
M.04-YPS-002					Safety valve (Cooling water - Module)	
M.05-PID-001					Differential pressure sensor (Air - Module)	
M.05-TI-001	+M1	37	6	+E1-37B9	Temperature control (Air - Module)	Intake air temperature
M.06-TI-001	+M1	42	6	+E1-42B11	Temperature control (High temperature circuit - Module)	Return temperature (before engine)
P.01-F-101					Filter (Fuel gas - System)	Condensate separator - Gas pressure control system 1
P.01-F-102					Filter (Fuel gas - System)	Gas filter - Gas pressure control system 1
P.01-PI-101					Pressure control (Fuel gas - System)	upstream of safety shut-off valve - Gas pressure control system 1
P.01-PI-102					Pressure control (Fuel gas - System)	Gas pressure control system 1

GE Proprietary Information: CONFIDENTIAL! Use or disclosure of data contained on this sheet is subject to the restrictions on the cover or on the first page.

Abbreviation	Circuit diagram				Description	Remark
	Section	Page	Path	el. designation		
P.01-PS-101	+M1	39	0	+P1-39B1	Pressure switch (Fuel gas - System)	Gas pressure min. - Gas pressure control system 1
P.01-PS-103	+M1	39	1	+P1-39B2	Pressure switch (Fuel gas - System)	Gas pressure max. - Gas pressure control system 1
P.01-US-101	+M1	45	1	+P1-45K1	Leak testing (Fuel gas - System)	Gas pressure control system 1
P.01-YCI-101					Valve with position controller (Fuel gas - System)	Pressure regulator - Gas pressure control system 1
P.01-YCI-103	+M1	51	0	+E1-51M9	Valve with position controller (Fuel gas - System)	Fuel gas regulator - Gas pressure control system 1
P.01-YCZ-103	+M1	46	1	+P1-46M4	Valve Open/Closed safety relevant (Fuel gas - System)	Solenoid valve - Gas valve gas pressure control system 1
P.01-YCZ-104	+M1	46	3	+P1-46M5	Valve Open/Closed safety relevant (Fuel gas - System)	Solenoid valve - Gas valve gas pressure control system 1
P.01-YCZ-110					Valve Open/Closed safety relevant (Fuel gas - System)	Solenoid valve - Main gas valve before gas pressure control system 1
P.02-B-001					Container (Exhaust gas - System)	Condensate drain of water supply
P.03-B-002					Container (Lubricating oil - System)	Engine oil tank - Fresh oil
P.03-LS-003	+A1	60	3	+P1-B3	Level switch (Lubricating oil - System)	Engine oil level in fresh oil tank 1
P.03-LS-013	+A1	60	4	+P1-B4	Level switch (Lubricating oil - System)	Engine oil level in fresh oil tank 1
P.04-W-003					Heat exchanger (Cooling water - System)	
P.07-B-001					Container (Low temperature circuit - System)	Pressure compensation tank
P.07-M-001					Engine (Low temperature circuit - System)	
P.07-NS-001					Engine On/Off (Low temperature circuit - System)	
P.07-P-001					Pump (Low temperature circuit - System)	
P.07-PI-001					Pressure control (Low temperature circuit - System)	
P.07-PS-001					Pressure switch (Low temperature circuit - System)	
P.07-YPC-001					Filling valve (Low temperature circuit - System)	
P.07-YPS-001					Safety valve (Low temperature circuit - System)	

GE Proprietary Information: CONFIDENTIAL! Use or disclosure of data contained on this sheet is subject to the restrictions on the cover or on the first page.

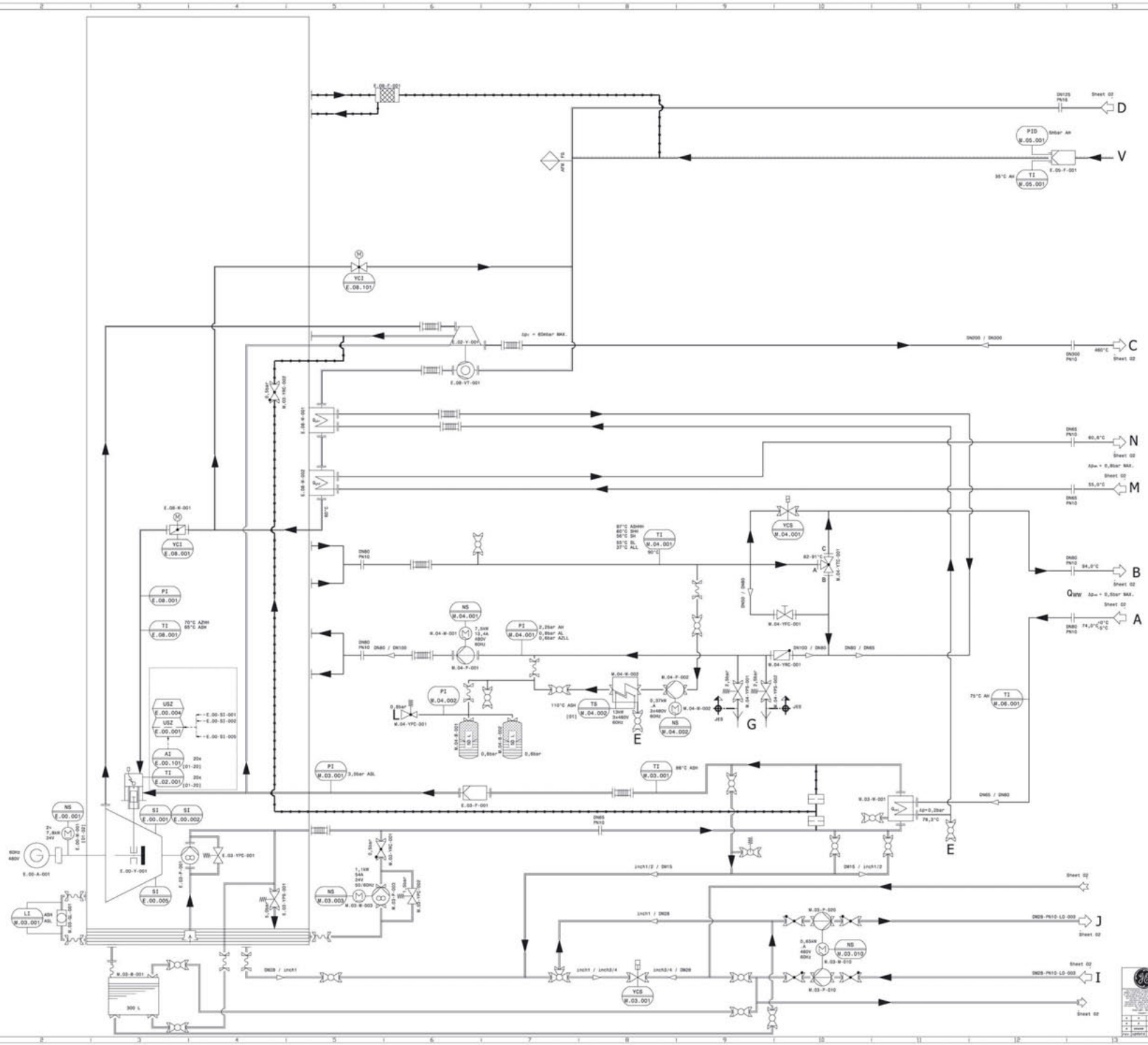
D
V
C
N
M
B
A
E
G
J
I
LEGEND SEE
E 16287 XX
Jenbacher gas engines
BUNCOMBE COUNTY LANDFILL
1 x JGC 420 GS-L.L - B82
TSR
J J1B3 00 03
1206918
released
techn. diagram eng.
A0

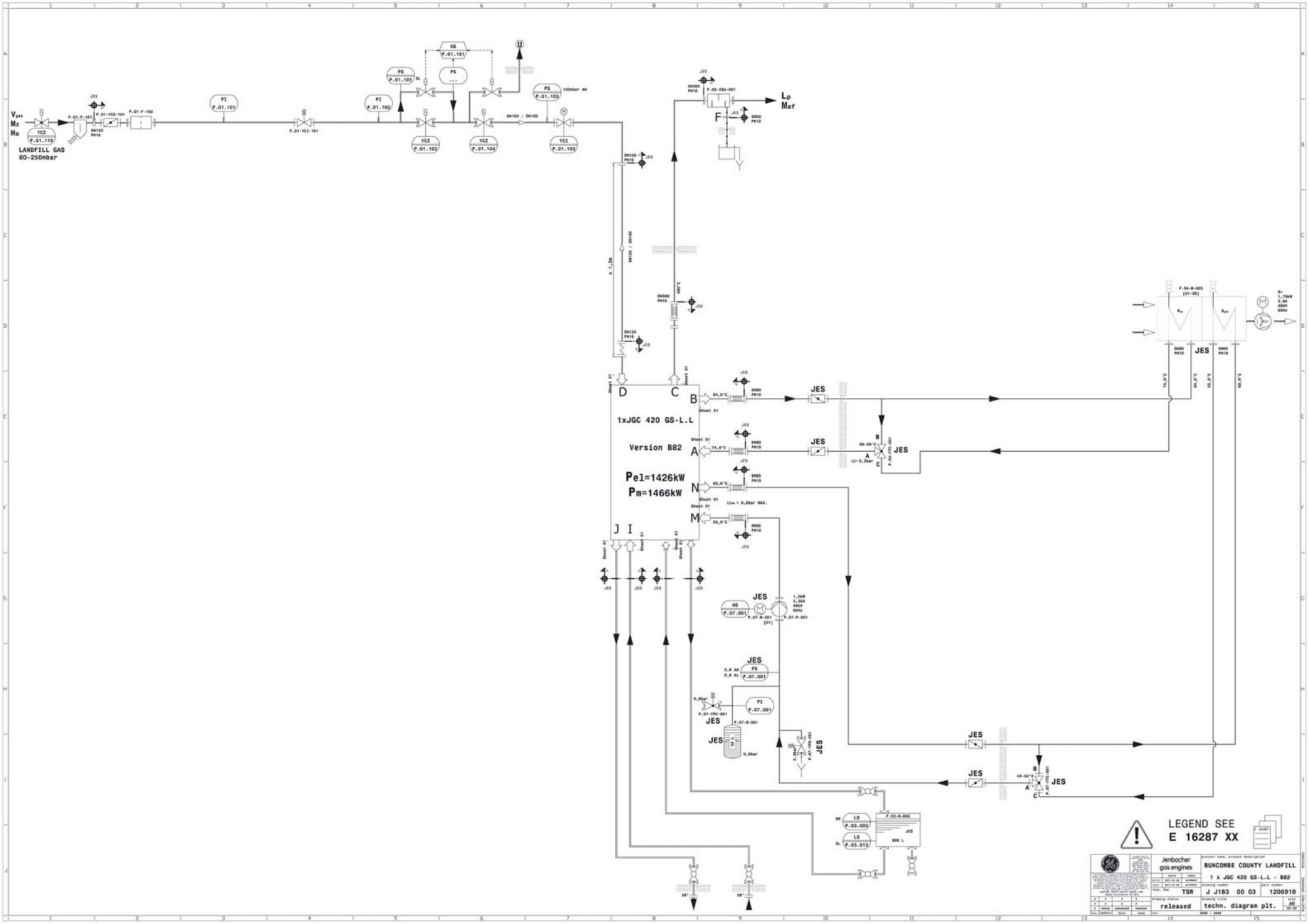
LANDFILL GAS
80-250mbar
1xJGC 420 GS-L.L
Version B82
Pel=1426kW
Pm=1466kW
JES
LEGEND SEE
E 16287 XX
Jenbacher gas engines
BUNCOMBE COUNTY LANDFILL
1 x JGC 420 GS-L.L - B82
TSR
J J183 00 03
1206918
released
techn. diagram plt.
A0

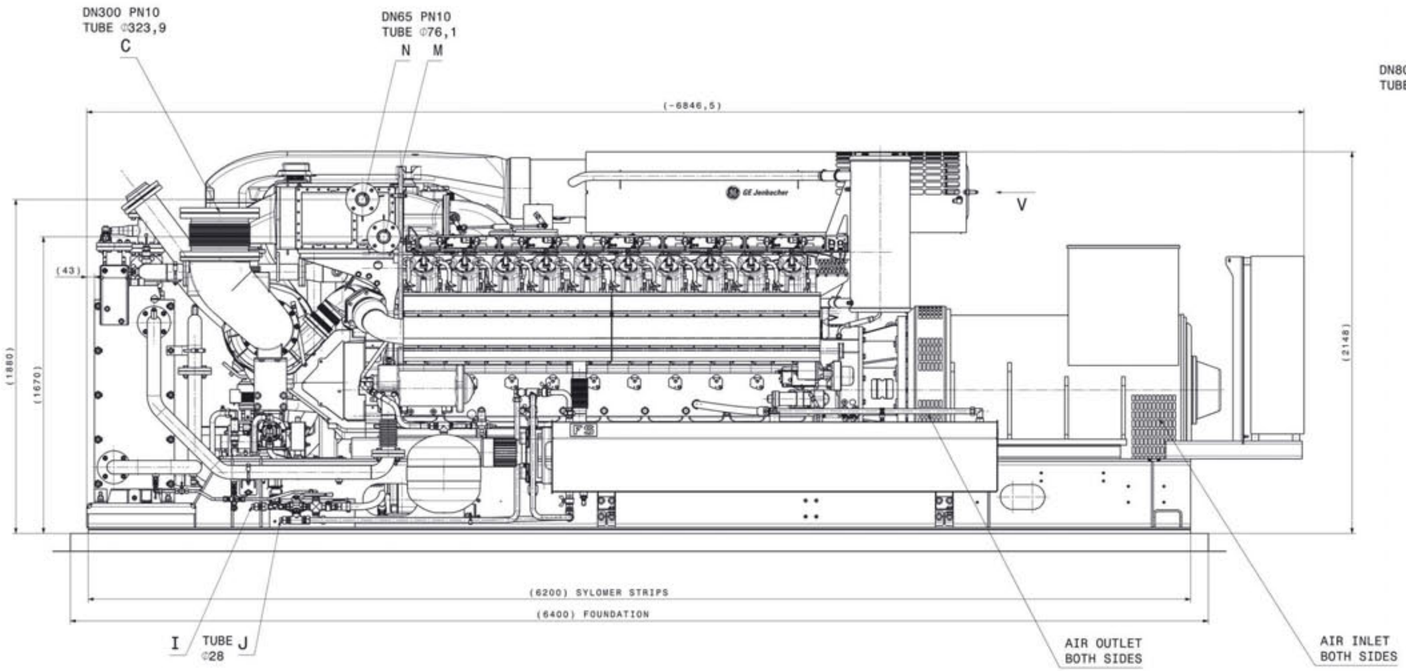

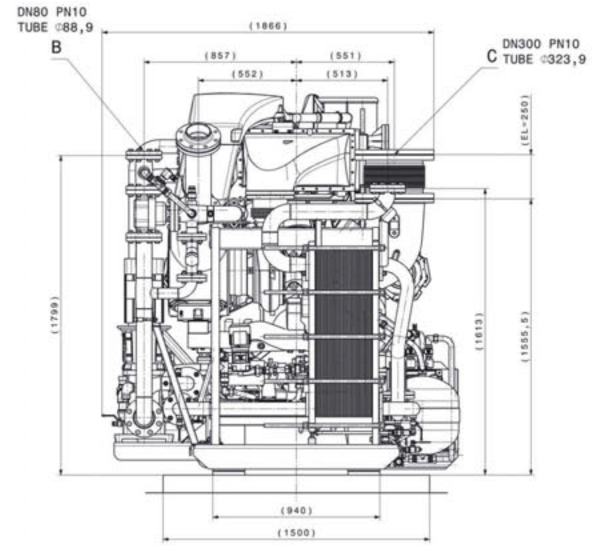

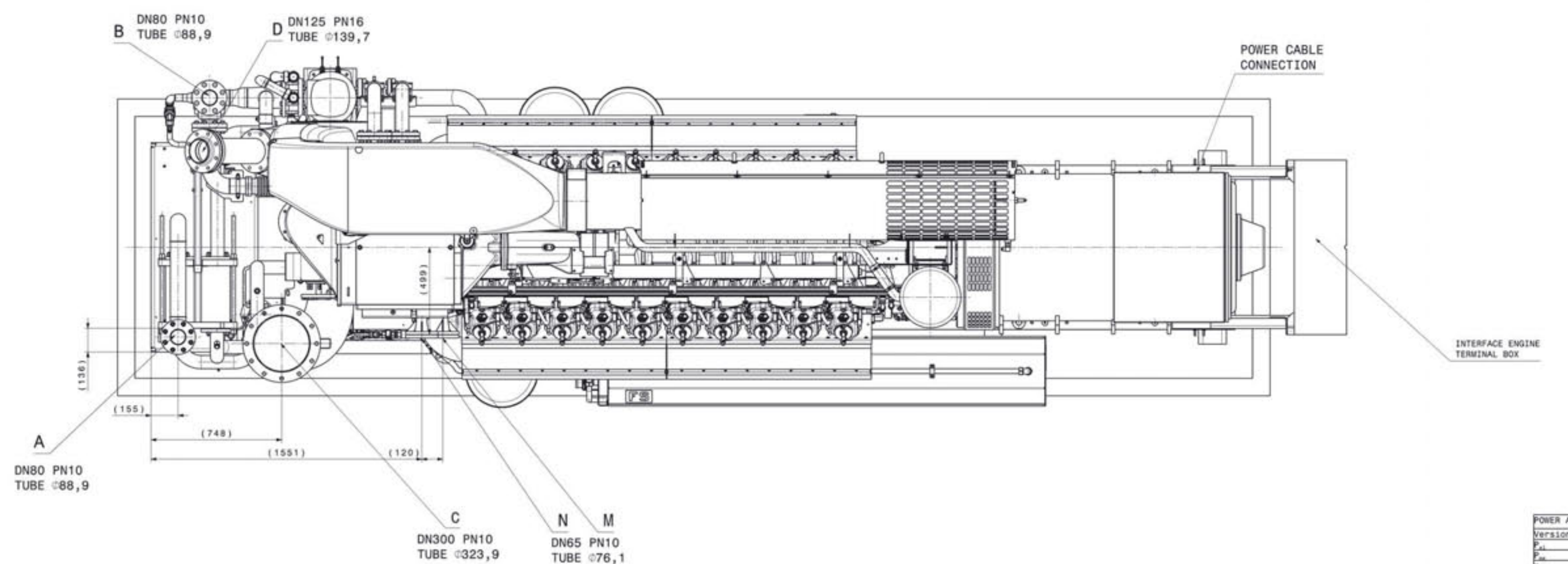

LEGENDE SIEHE
E 16287 XX
LEGEND SEE

BUNCOMBE COUNTY LANDFILL

1 x JGC 420 GS-L.L

DESIGN SUBJECT TO CHANGE
FOR TECHNICAL DATA SEE TECHN. DIAGRAM

POWER AND EFFICIENCY		
Version	B82	
P_{el}	1426	KW
P_{me}	1466	KW
η_{el}	39,4	%

MASS		
$M_{ges\ dry}$	14700	KG
M_{ges}	15400	KG

COAT OF LAQUER	
L_{mot}	RAL 6018
L_{gen}	RAL 6018
L_{frm}	RAL 6018

1:10 | 1 | 2 | A0

Technische dokumentation.
Technical documentation..

GE Jenbacher

J J183 00 02
1205952

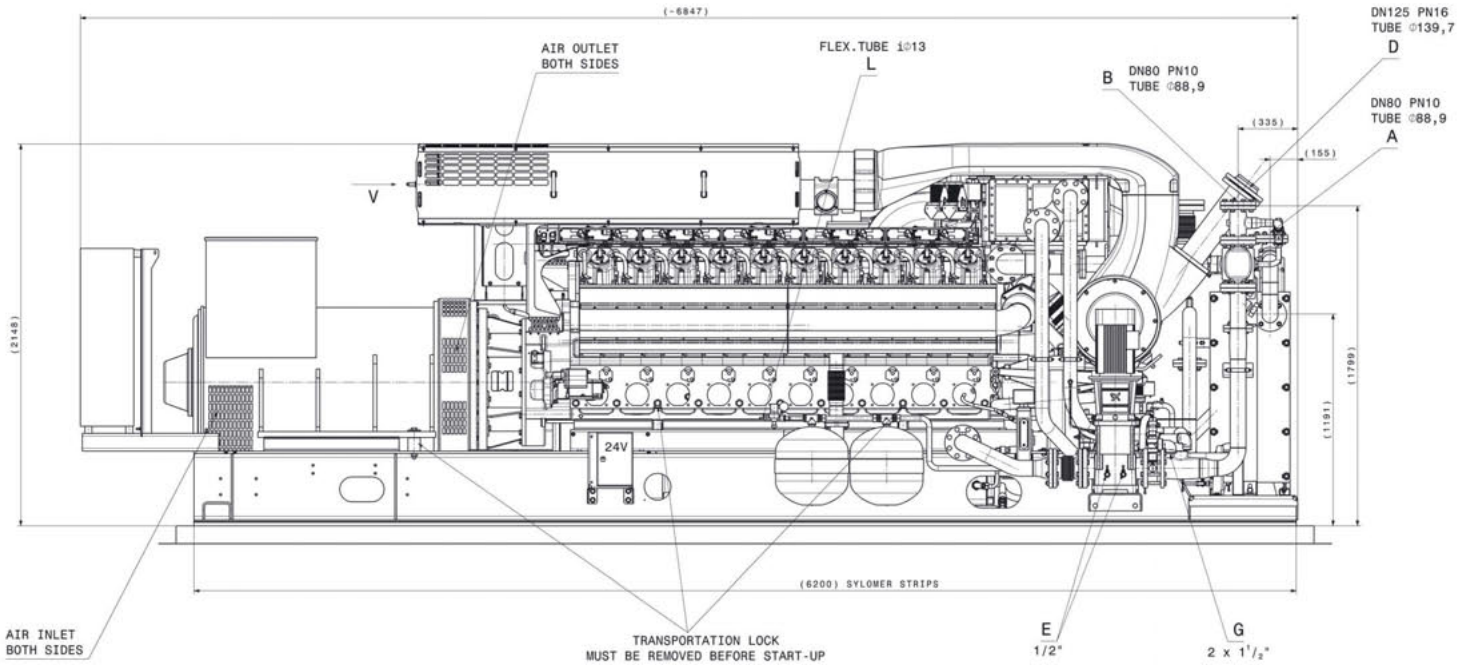

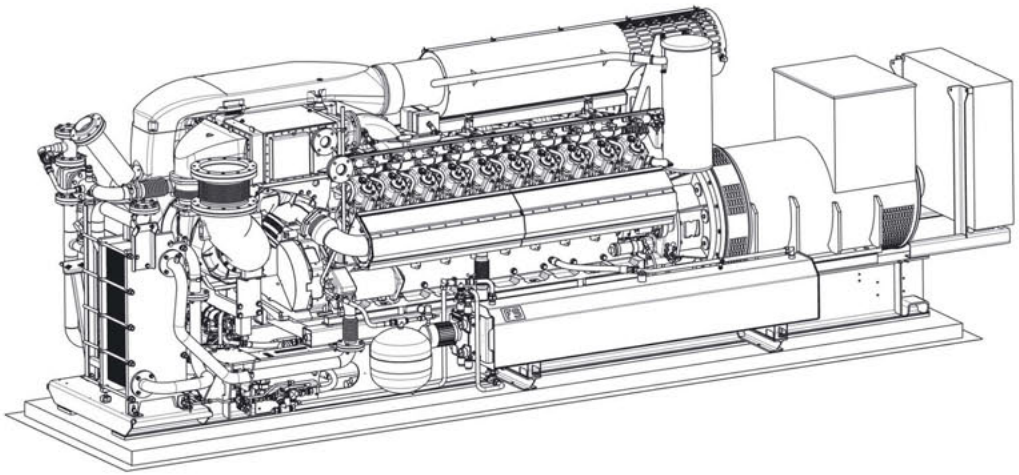

LEGENDE SIEHE
E 16287 XX
LEGEND SEE

BUNCOMBE COUNTY LANDFILL
1 x JGC 420 GS-L.L

DESIGN SUBJECT TO CHANGE
FOR TECHNICAL DATA SEE TECHN. DIAGRAM

POWER AND EFFICIENCY		
Version	B82	
P_{el}	1426	KW
P_{th}	1466	KW
η_{el}	39,4	%
MASS		
$M_{Gas\ dry}$	14700	KG
M_{Gas}	15400	KG
COAT OF LAQUER		
L_{Gas}	RAL 6018	
L_{Gas}	RAL 6018	
L_{Fire}	RAL 6018	

DIN 13920							
DIN 8592							
DIN 8015							
Änderungen im Zustand entsprechend DIN 7168	Name	Maß					
	Datum	Name	Benennung/Werkstoff DIN EN 10027-2	Gezeichnet nach DIN 6771-1	Benennung/Werkstoff DIN EN 10027-2	Maßstab	Gewicht
Gezeichnet	05-11-2010	gruenstein / TSB	Technische Änderungen vorbehalten				
Geprüft	24-01-2011	grueneisl	Technical data subject to change				
Ersatz für:			Ersatzteilliste/Technical data				
Ersetzt durch:			Technische Daten DIN EN 10027-2				
Zeichnungsnummer			Technical data DIN EN 10027-2				
Maßstab		Gewicht	Blatt	Blätter			
	1:10		2	2	A0		

Benennung/Titel
Technische dokumentation.
Technical documentation..

GE Jenbacher

Zeichnungsnummer J J183 00 02

TLNR: 1205952

Diese Zeichnung darf ohne unsere ausdrückliche Genehmigung weder vervielfältigt noch Dritten zugänglich gemacht werden.
Übernommen aus/Originalerst. Ersatz:

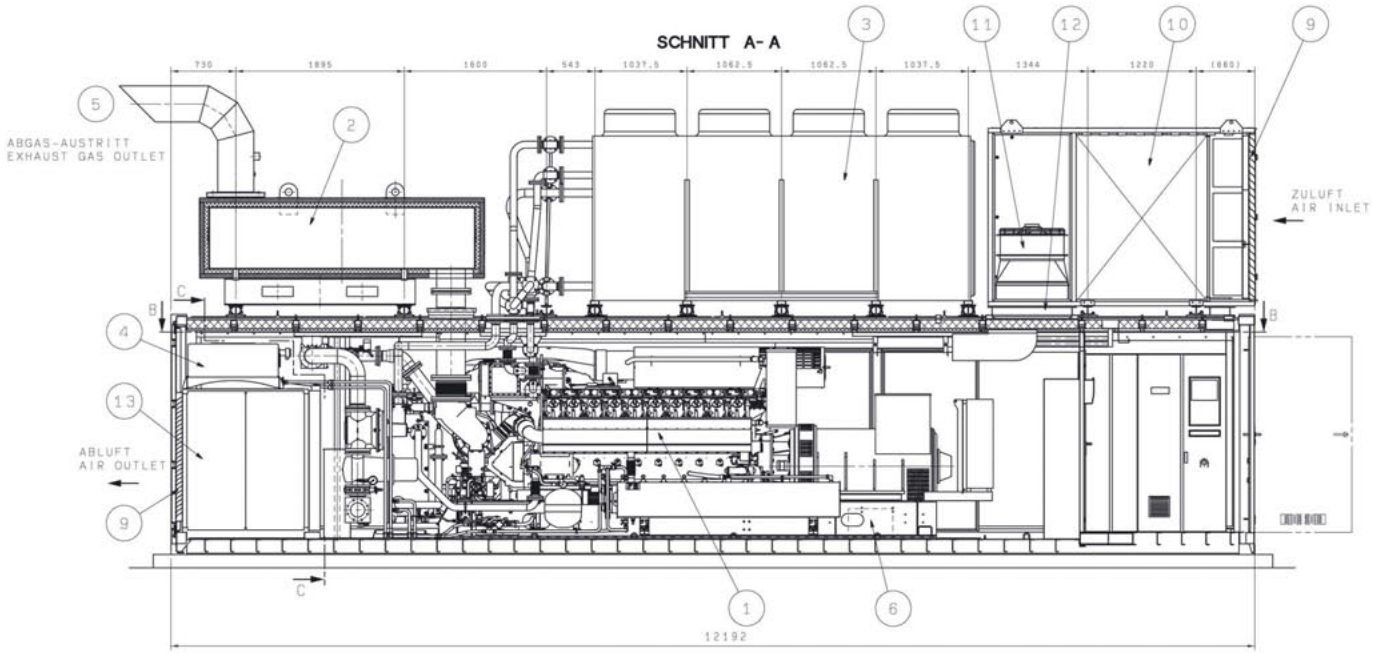

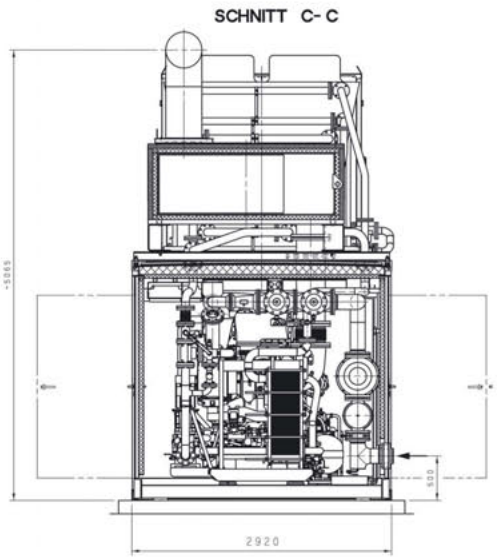

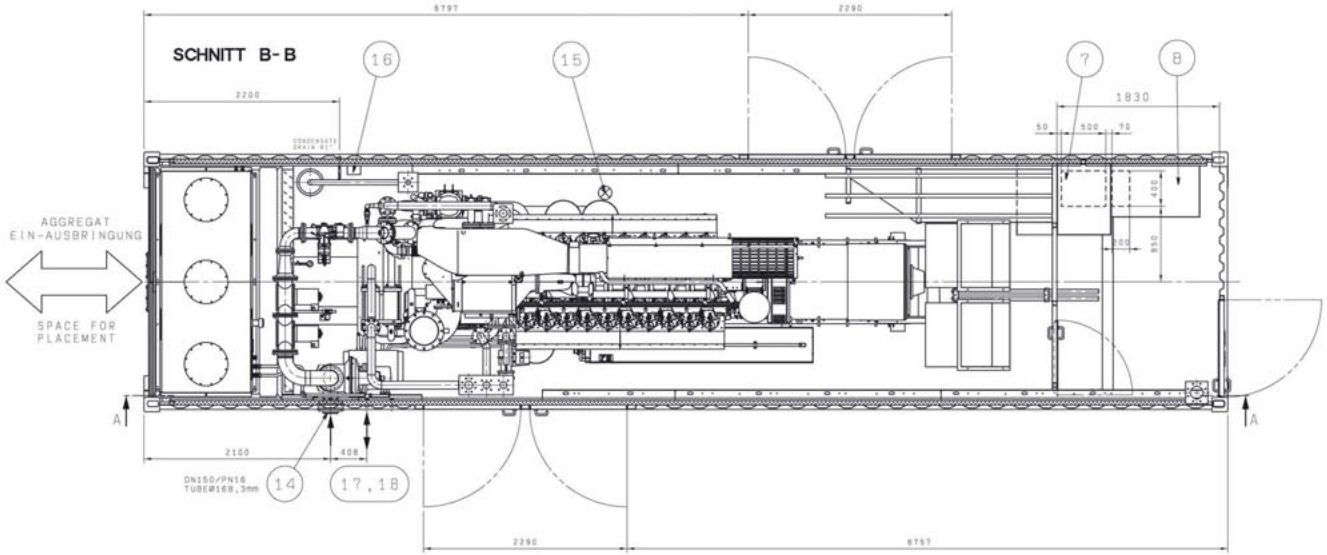

1) MODUL JGC 420 GS-L.L	1) AGGREGAT JGC 420 GS-L.L
2) EXHAUST GAS SILENCER	2) ABGASSCHALLDAEMPFER
3) TABLE COOLER	3) TISCHKUEHLER
4) FRESH OIL TANK 800L	4) FRISCHOELBEHAELTER 800L
5) EXHAUST GAS DN400 PN16	5) ABGAS DN400 PN16
6) BATTERY	6) STARTERBATTERIEN
7) POWER PART	7) LEISTUNGSTEIL
8) CONTROL BOARD GENSET	8) AGGREGATSTEUERSCHRANK
9) WEATHER PROTECTION GRATING	9) WETTERSCHUTZGITTER
10) SILENCER AIR ADMISSION	10) ZULUFTSCHALLDAEMPFER
11) BLOWER AIR ADMISSION	11) ZULUFTVENTILATOR
12) FLAP JALOUSIE	12) KLAPPENJALOUSIE
13) SILENCER FOR USED AIR	13) ABLUFTSCHALLDAEMPFER
14) FUEL GAS INLET DN150/PN16	14) TREIBGAS DN150/PN16
15) SMOKE DETECTOR	15) RAUCHMELDER
16) GAS DETECTOR	16) GASSPUEHRGERAET
17) FRESH OIL TUBE Ø28	17) FRISCHOEL ROHR Ø28
18) USED OIL TUBE Ø28	18) ALTOEL ROHR Ø28

LEGENDE SIEHE
E 16287 XX
LEGEND SEE

CONTAINERWEIGHT:
FILLED:CA.34000KG

NOISE LEVEL:
65 dB(A) AT 10M

CONTAINER-LIFTING AND
HANDLING SEE TA 1000-0048

BUNCOMBE COUNTY LANDFILL

1 x JGC 420 GS-L. L

DESIGN SUBJECT TO CHANGE
TECHN. AENDERUNGEN VORBEHALTEN

1:20					A0
AUFSTELLUNGSPLAN					
Installation plan					
GE Jenbacher	J J183 00 01				
	1206917				

1 Gas piping

Technical Information **1400-0131**.

2 Gas train

F	Filter
PI	Pressure control
PS	Pressure switch
US	Leak testing
YCI	Valve with position controller
YCS	Valve Open/Closed
YCZ	Valve Open/Closed safety relevant

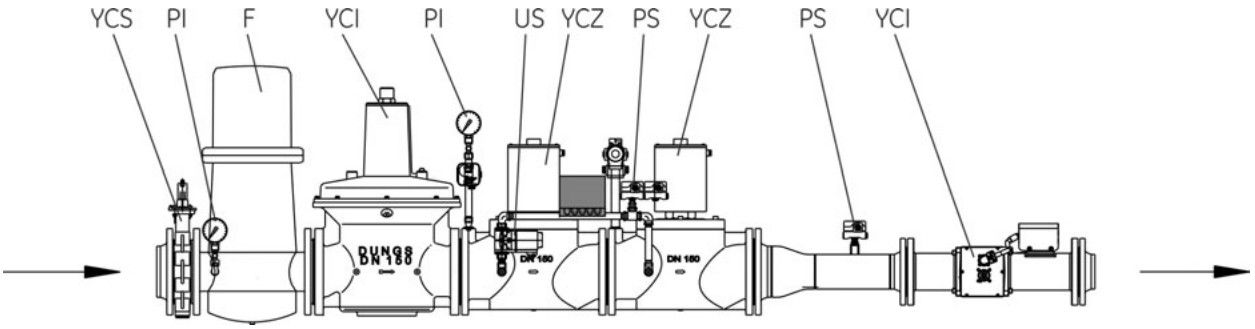

Main gas trains

GE Proprietary Information: CONFIDENTIAL! Use or disclosure of data contained on this sheet is subject to the restrictions on the cover or on the first page.

1 General 1
2 Construction of the MORIS ignition system 1
2.1 MPM (MORIS Power Module) 2
2.2 SPA24 (SAFI Pickup Amplifier): 2
2.3 MORIS (MOdular Rail Ignition System): 2
2.4 SAFI (Sensor Actor Function Interface): 2
2.5 M coil (MORIS ignition coil) 3
2.6 spark plug connector 3
3 Ignition characteristics: 3

1 General

The combustion of the fuel gas in the gas engine is initialised by a modulated, decentralised high-voltage capacitor ignition system. The ignition energy, the ignition point and other parameters of the ignition system are pre-set by the engine control system via the CAN bus. Comprehensive diagnostic systems make it possible to make a very detailed analysis of the status of the ignition system.

2 Construction of the MORIS ignition system

Basic construction of the MORIS ignition system based on the example of an 8-cylinder V engine:

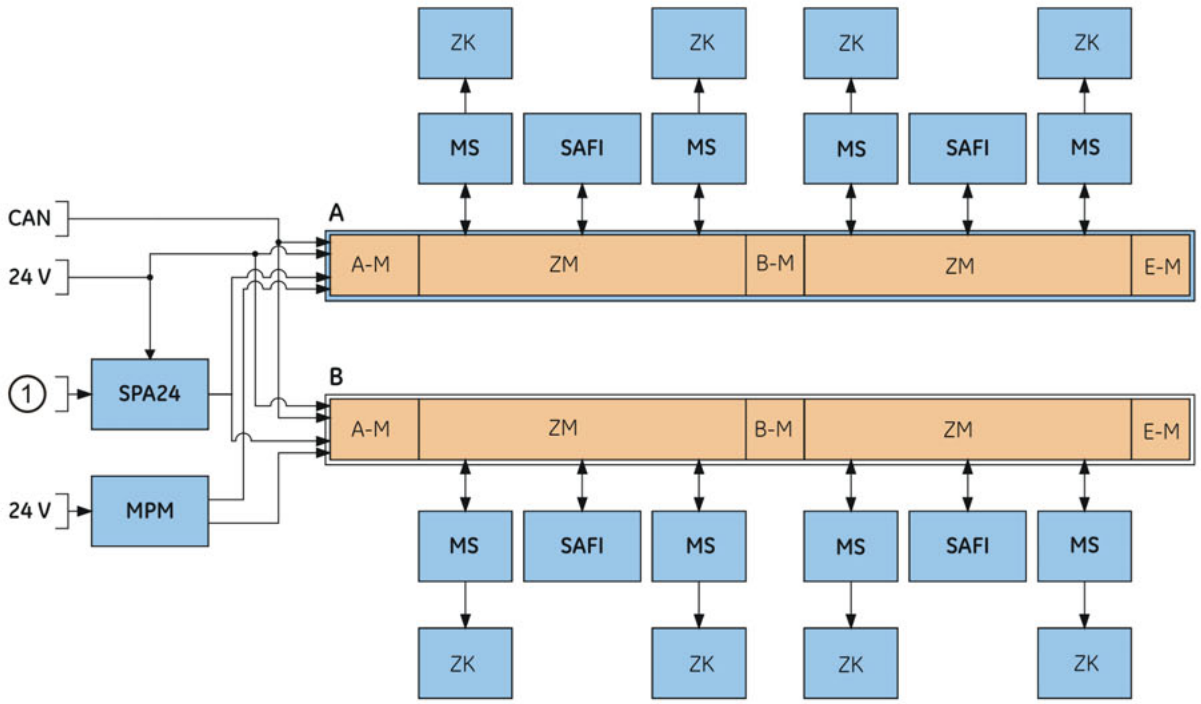

①	Trigger, Reset and CAM Signal	MPM	MORIS Power Modul
A	Bank A	M-S	MORIS ignition coil
B	Bank B	SAFI	Sensor Actor Function Interface
A-M	A module	SPA24	SAFI Pick-up Amplifier

GE Proprietary Information: CONFIDENTIAL! Use or disclosure of data contained on this sheet is subject to the restrictions on the cover or on the first page.

B-M	B module	ZM	ZM Ignition module
E-M	E module	ZK	Spark plug
CAN	CAN		

The modular construction makes it possible to fit the widest possible range of engines with the modules described.

2.1 MPM (MORIS Power Module)

The **MPM** generates a voltage of 185 V from the 24 V battery voltage to supply the ignition system with energy. If more energy is required because of a high number of cylinders or a very high energy demand from the ignition system, it is possible to fit two **MPMs** per engine.

Detailed information on the **MPM** can be found in TI 1502-0069.

2.2 SPA24 (SAFI Pickup Amplifier):

SPA24 conditions the engine's three pickup signals for processing on the **SAFI**, and **SPA24** is powered by the 24 V battery voltage. The three pickup signals are:

- ring gear signal on the flywheel
- reset signal on the flywheel
- Camshaft signal

Detailed information on the **SPA24** can be found in TI 1502-0072.

2.3 MORIS (MOdular Rail Ignition System):

MORIS consists of an aluminium section into which a connection module, an intermediate module and an end module have been inserted. The ignition modules are fitted between these inserted modules. The ignition module contains the output stage of the ignition system, which controls the ignition coils for two cylinders.

Detailed information on the **MORIS** can be found in TI 1502-0068.

2.4 SAFI (Sensor Actor Function Interface):

The ignition system is controlled by **SAFI**. **SAFI** calculates the angle position of the crankshaft and camshaft based on pickup signals and subsequently the ignition point, which is specified by the engine control system. In addition to the ignition point, the ignition energy, ignition spark characteristics, the commands for the misfire control system and information on the monitoring of the ignition process are transmitted via the CAN bus by the engine control system. Information on the status of the ignition system is reported back to the engine control system by **SAFI** via the CAN bus. The ignition output stage is regulated by **SAFI** to ensure that the preselected spark characteristics are set.

As well as controlling the ignition system, **SAFI's** functions include detecting the condition of the spark plug, measuring the engine speed, monitoring knocking and valve noise, analysing the combustion process and measuring the exhaust gas temperature.

GE Proprietary Information: CONFIDENTIAL! Use or disclosure of data contained on this sheet is subject to the restrictions on the cover or on the first page.

SAFI is mounted on the **MORIS** in the centre of the ignition modules between the two ignition coils.

Detailed information on the **SAFI** can be found in TI 1502-0071.

2.5 M coil (MORIS ignition coil)

Each ignition output stage powers two **M coils**, which are mounted to the left and right of **SAFI**. The **M coils** produce the high voltage. The high voltage is measured by a capacitor divider, the signal being amplified and analysed in **SAFI**.

Detailed information on the **MORIS** can be found in TI 1502-0068.

2.6 spark plug connector

The ignition energy is transferred to the spark plug via the spark plug connector.

3 Ignition characteristics:

In the **MORIS** ignition system the current in the ignition spark is kept to the preset characteristics. The conversion is therefore mostly independent of the condition of the spark plug, provided that the system's high-voltage supply is not exceeded.

If the ignition spark is extinguished, the **MORIS** ignition spark is restored automatically.

The diagram below illustrates the working principle of the **MORIS** ignition system.

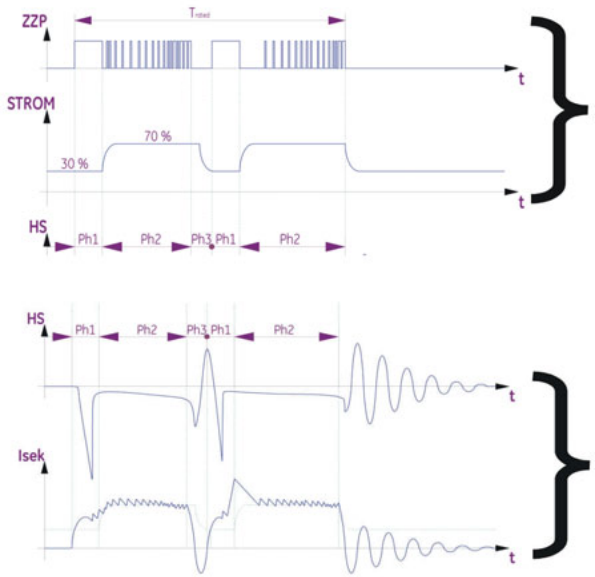

Control of MORIS by SAFI (energy feed and current set point)

Implementation as ignition sparks (voltage and current)

Ph1	Firing up
Ph2	Igniting
Ph3	Initialising for re-ignition

GE Proprietary Information: CONFIDENTIAL! Use or disclosure of data contained on this sheet is subject to the restrictions on the cover or on the first page.

ZZP	Ignition timing point
STROM	Current
HS	High voltage
Isek	I second

GE Proprietary Information: CONFIDENTIAL! Use or disclosure of data contained on this sheet is subject to the restrictions on the cover or on the first page.

1 Function of the flexible coupling 1
2 Tightening torques 1
3 Components of the flexible coupling 2
3.1 Engine end 2
3.2 Generator end 2

1 Function of the flexible coupling

The generator housing and the gearbox (engine) are bolted together via the flexible coupling housing.

The gear on the coupling element (generator) engages with the one on the coupling flange (engine), and power is transferred from the engine to the generator by positive locking.

The flexible coupling is designed to transmit power up to a certain rated torque. If this rated torque is exceeded by a factor of about 5 – 6, then the external teeth (rubber disc) slip to protect the engine and the generator against temporary overloading.

Temporary overloading can be caused by incorrect synchronisation or a short circuit.

2 Tightening torques

Item No.	Tightening torque (Nm)	Remark
1	420	Locked using Loctite 242
2	190	Locked using Loctite 242
3	80	Locked using Loctite 242
4	190	Locked using Loctite 242
5	210	Locked using Loctite 242

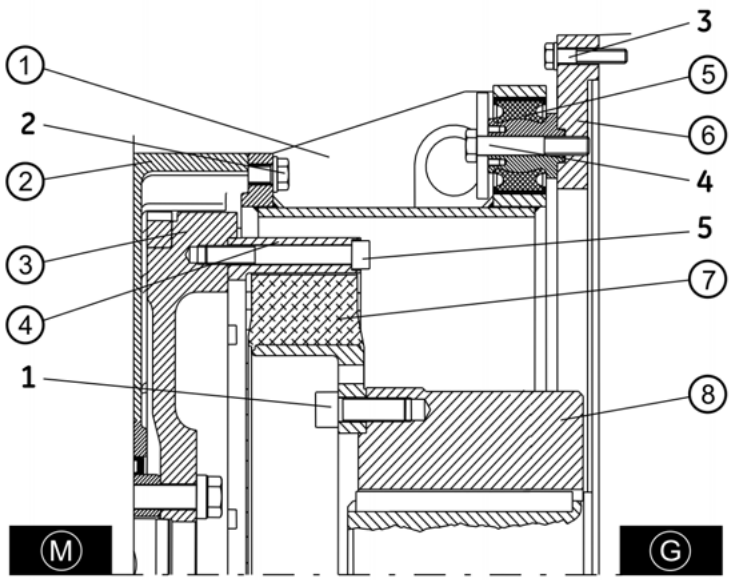

GE Proprietary Information: CONFIDENTIAL! Use or disclosure of data contained on this sheet is subject to the restrictions on the cover or on the first page.

M	Engine	G	Generator
①	Coupling housing	⑤	Coupling element (bell housing)
②	Gearbox	⑥	Generator housing
③	Flywheel	⑦	coupling element
④	coupling flange	⑧	Coupling hub

3 Components of the flexible coupling

3.1 Engine end

The internal-geared coupling flange (light metal ring) is bolted onto the flywheel.

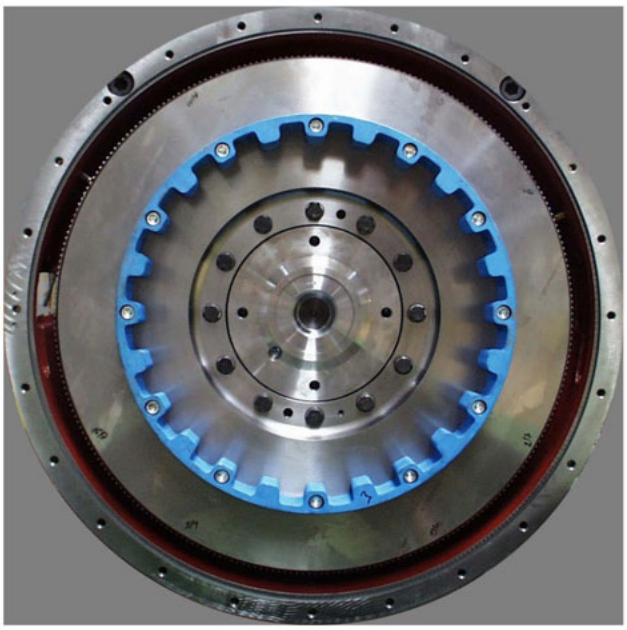

3.2 Generator end

The coupling hub is mounted onto the generator shaft using a feather key and a set screw.

The coupling element, which consists of a steel disc onto which a rubber disc has been vulcanised, is bolted to the coupling hub.

GE Proprietary Information: CONFIDENTIAL! Use or disclosure of data contained on this sheet is subject to the restrictions on the cover or on the first page.

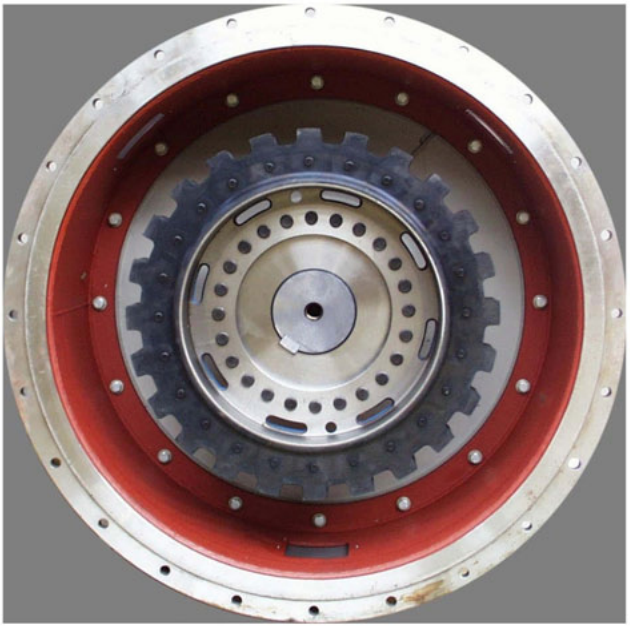

GE Proprietary Information: CONFIDENTIAL! Use or disclosure of data contained on this sheet is subject to the restrictions on the cover or on the first page.

1 Leanox® controller 1
2 Pollutant emissions as a function of the air ratio λ 1
3 Schematic diagram of the controlled system 3

1 Leanox® controller

The operation of GE Jenbacher gas engines has been optimised to ensure that lowest exhaust emission values are achieved under full-load operation.

These optimised exhaust emissions can be achieved only by operating lean-mix engines with the correct air excess ratio λ (air ratio). This principle exploits the direct link between NOx-emissions and the air excess ratio to achieve minimum exhaust emission values. The patented LEANOX control system is based on the linear relationship between the air excess ratio λ and the quantities power, boost pressure and air-gas mixture temperature. A control system based on these principles has the great advantage that all these quantities can be measured easily and reliably, and that the air ratio λ can be calculated exactly. The system eliminates the need for measuring probes in the exhaust system, which can be subject to ageing. This means that the emissions targets can be met reliably.

The task of the LEANOX controller is to calculate and set the optimum boost pressure, based on the current power output and the current air-gas mixture temperature. The linear relationship between these quantities is calculated automatically by **dia.ne** after two of the operating points have been stored to memory.

The LEANOX controller switches itself on automatically once the actual power output exceeds a threshold value (approx. 30% of the total power output). The program provides four sets of parameters for different types of fuel gas.

The LEANOX controller is always active during grid interconnection operation, but can also be switched on during isolated operation (depending on the system-specific design).

A PI controller is used for the actual control.

The final control element is a gas volume controller, which regulates the gas volume to control the air ratio λ.

2 Pollutant emissions as a function of the air ratio λ

NO_x/CO
[mg/Nm³],
at 5% O2

NMHC
[mg/Nm³],
at 5% O2

GE Proprietary Information: CONFIDENTIAL! Use or disclosure of data contained on this sheet is subject to the restrictions on the cover or on the first page.

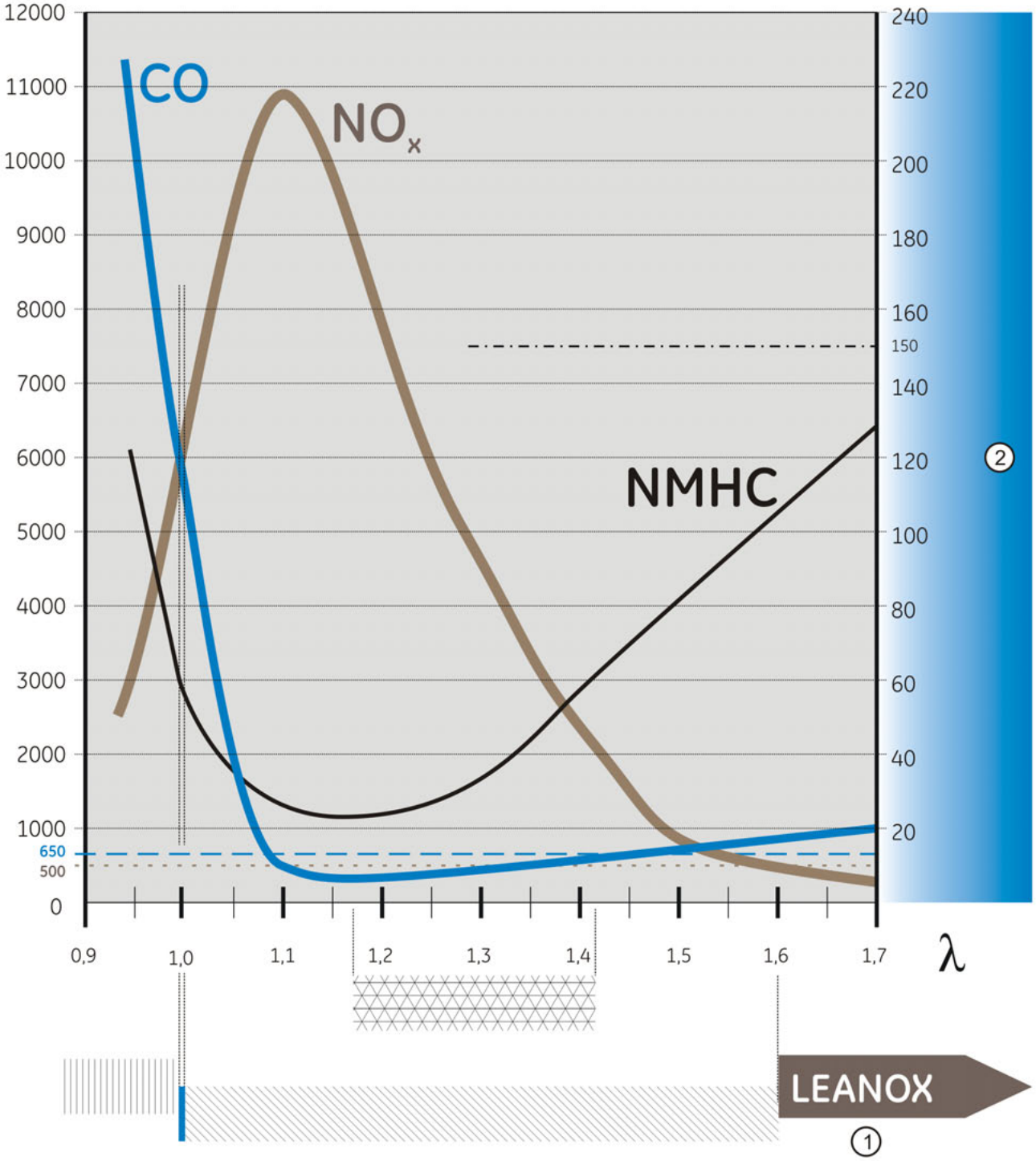

Leanox Diagram

GE Proprietary Information: CONFIDENTIAL! Use or disclosure of data contained on this sheet is subject to the restrictions on the cover or on the first page.

- - - - - - - -	NO_x -> TA Luft limit value		common operating range until now
— — — —	CO -> TA Luft limit value	①	Lean-burn operation
-·-·-·-·-	NMHC -> TA Luft limit value	②	Misfiring range
	SCR procedure	λ	Air ratio Lambda
	NSCR method (λ-1 concept)		

3 Schematic diagram of the controlled system

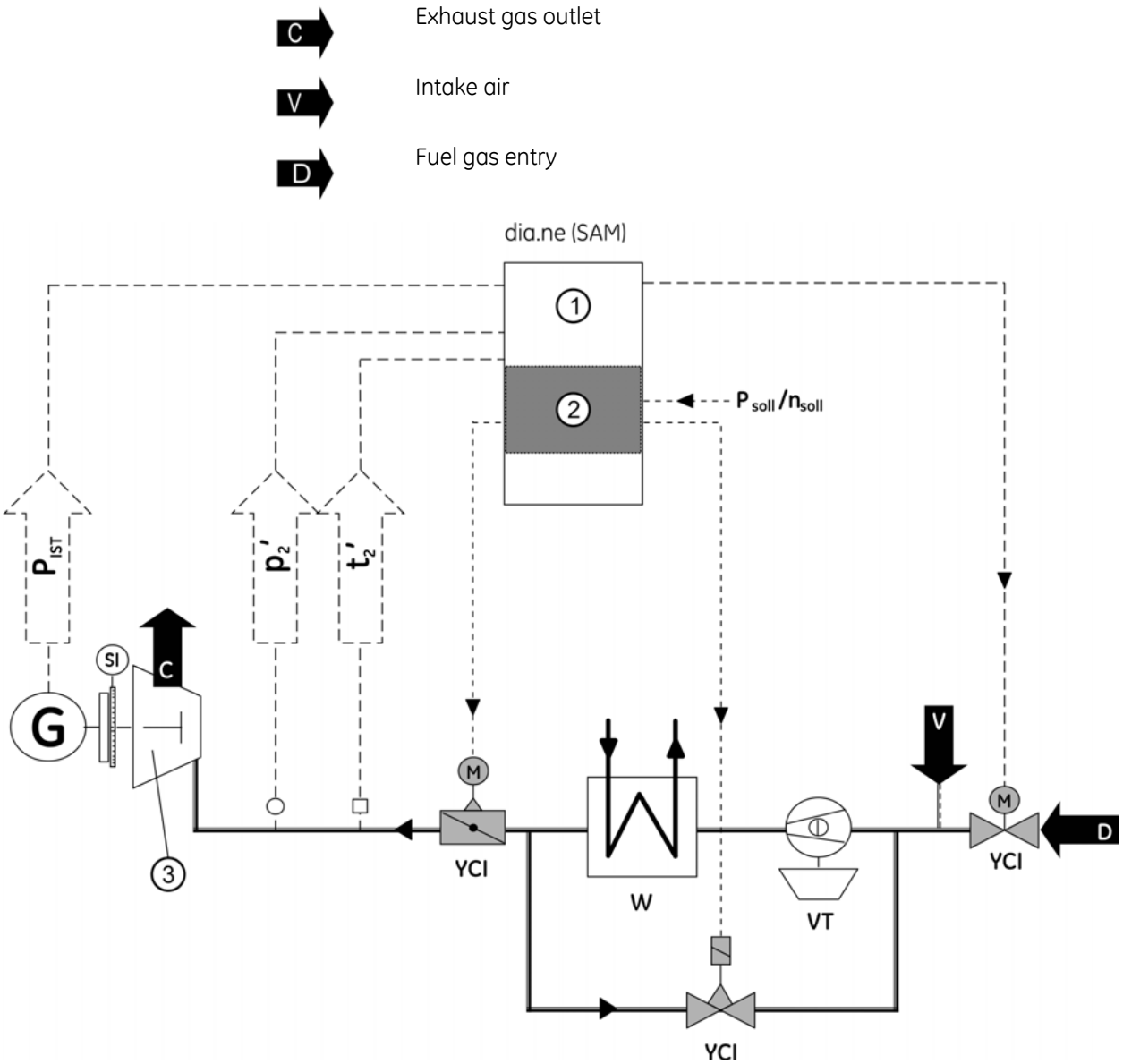

Leanox control system diagram

GE Proprietary Information: CONFIDENTIAL! Use or disclosure of data contained on this sheet is subject to the restrictions on the cover or on the first page.

Controlled variable	Final control element
p2' (boost pressure)	Gas quantity controller (quantity control)
t2' (mixture temperature)	
PIST (power)	
①	Leanox controller
②	P controller/ nP controller
③	Gas engine
G	Generator
SI	Pickup
VT	Compressor
YCI	Valve with position controller
W	Heat exchanger

GE Proprietary Information: CONFIDENTIAL! Use or disclosure of data contained on this sheet is subject to the restrictions on the cover or on the first page.

Speed controller:

After the engine has been started up, the electronic speed controller adjusts the engine speed to a setpoint value. The actual engine speed is compared to the setpoint engine speed, and is then matched to it by altering the setting of the throttle valve.

Controlled variable	Final control element
n (speed)	Throttle valve

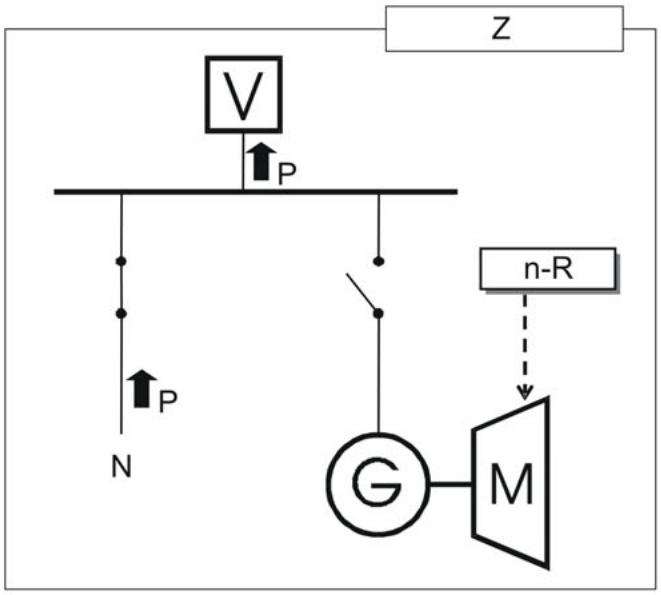

G	Generator
M	Engine
N	Power grid
P	Electrical power
n	Speed
n-R	Speed controller
V	Consumer
Z	Engine idle

GE Proprietary Information: CONFIDENTIAL! Use or disclosure of data contained on this sheet is subject to the restrictions on the cover or on the first page.

1 Power controller

In grid interconnection operation, the engine is controlled by a power controller in order to strictly maintain the setpoint output. The current power output of the generator is compared to the setpoint power output, and is then matched accordingly by adjusting the throttle valve and the electrically operated valves in the mixture bypass system (turbocharger bypass).

The electrically operated valves in the turbocharger bypass system work together with the throttle valve to ensure an optimum level of control over the system.

Controlled variable	Final control element
P (power)	Turbocharger bypass throttle valve

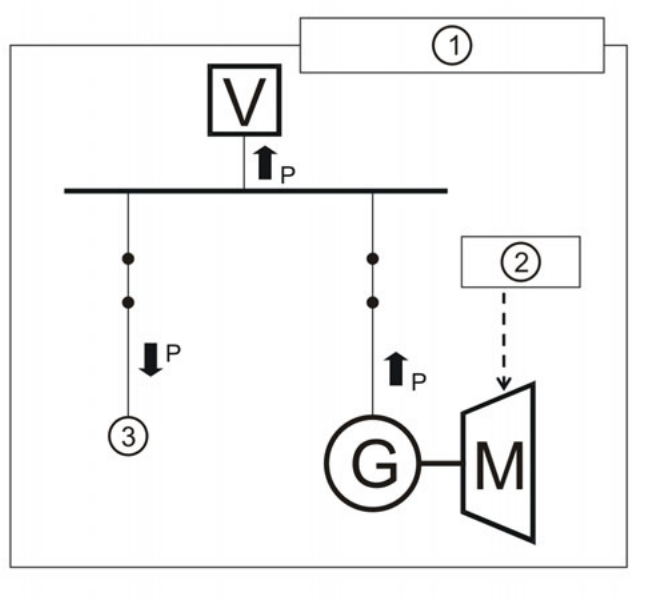

Power controller diagram

①	Mains parallel operation	M	Engine
②	P controller	G	Generator
③	Power grid	P	Electrical power
V	Consumer		

GE Proprietary Information: CONFIDENTIAL! Use or disclosure of data contained on this sheet is subject to the restrictions on the cover or on the first page.

Isolated operation controller

In isolated operation, a constant engine speed is required even when loads are switched on and off. This function is also carried out by the speed controller in a specific adaptation.

When several machine groups operate in parallel in an isolated grid (e.g. emergency power operation), the required power output has to be distributed optimally over the modules available.

There are two power distribution methods available which meet these requirements.

Power distribution via an equalising line

The average value of the individual power outputs of the engines is calculated and made available via the equalising line to the controller which uses it as a setpoint value. When operating via an equalising line, the power distribution is accurate and the grid frequency is held exactly.

Power distribution using offset coefficient control: (dia.ne and other engine management systems)

A power distribution system that uses offset coefficient control lowers the setpoint engine speed as the power output increases. If every engine responds in the same way, then a stable operating point sets in at which all engines deliver the same power.

Controlled variable	Final control element
n (speed)	Turbocharger bypass Throttle valve
P (power)	Turbocharger bypass Throttle valve

GE Proprietary Information: CONFIDENTIAL! Use or disclosure of data contained on this sheet is subject to the restrictions on the cover or on the first page.

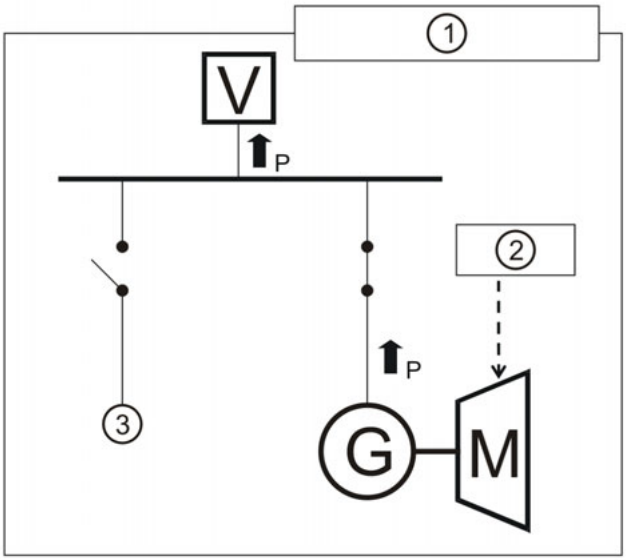

Isolation operation controller diagram

①	isolated operation	M	Engine
②	nP controller	G	Generator
③	Mains	P	Electrical power
V	Consumer		

GE Proprietary Information: CONFIDENTIAL! Use or disclosure of data contained on this sheet is subject to the restrictions on the cover or on the first page.

1 Engine oil 1
1.1 Functions 1
1.2 Influencing factors 2
1.2.1 General factors influencing the condition of the used oil 2
1.2.2 Sulphate ash content as a factor influencing the engine oil quality 2
1.3 Technical Directive (requirements) 2
2 Cooling Water 3
2.1 Functions 3
2.2 Technical Directive (requirements) 3
3 Fuel gas 4
3.1 Functions 4
3.2 Determining the methane number 5
3.3 Technical Directive (requirements) 5

1 Engine oil

1.1 Functions

In addition to the lubrication of bearings and moving engine parts, the engine oil is used in the cooling, sealing and cleaning processes in the engine.

- **Lubrication** of bearings (crankshaft main bearings; big-end bearings; camshaft bearings; gear train bearings...) and moving engine parts (pistons/cylinder liners; tappets; rocker arms; valves....).
- **Cooling** of pistons (cooling duct on piston crown) and exhaust gas turbocharger. The engine oil absorbs thermal energy from hot engine components and transfers it to the cooling water in the oil cooler (engine oil/water heat exchanger).
- **Sealing effect** between piston rings and cylinder liners.
- **Cleaning and preservation** to prevent deposits in the engine. Deposits caused by combustion and wear (ash; metal abrasion...) are picked up by the engine oil. Some of these deposits are filtered out in the engine oil filter, the rest remain suspended in the engine oil.

GE Proprietary Information: CONFIDENTIAL! Use or disclosure of data contained on this sheet is subject to the restrictions on the cover or on the first page.

1.2 Influencing factors

1.2.1 General factors influencing the condition of the used oil

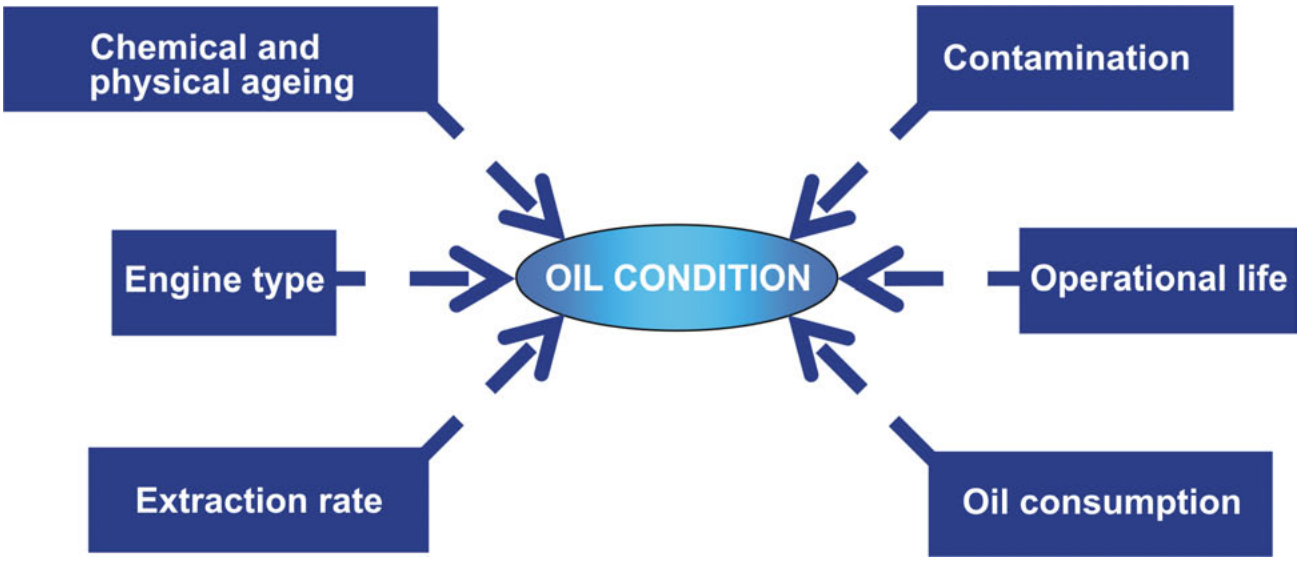

1.2.2 Sulphate ash content as a factor influencing the engine oil quality

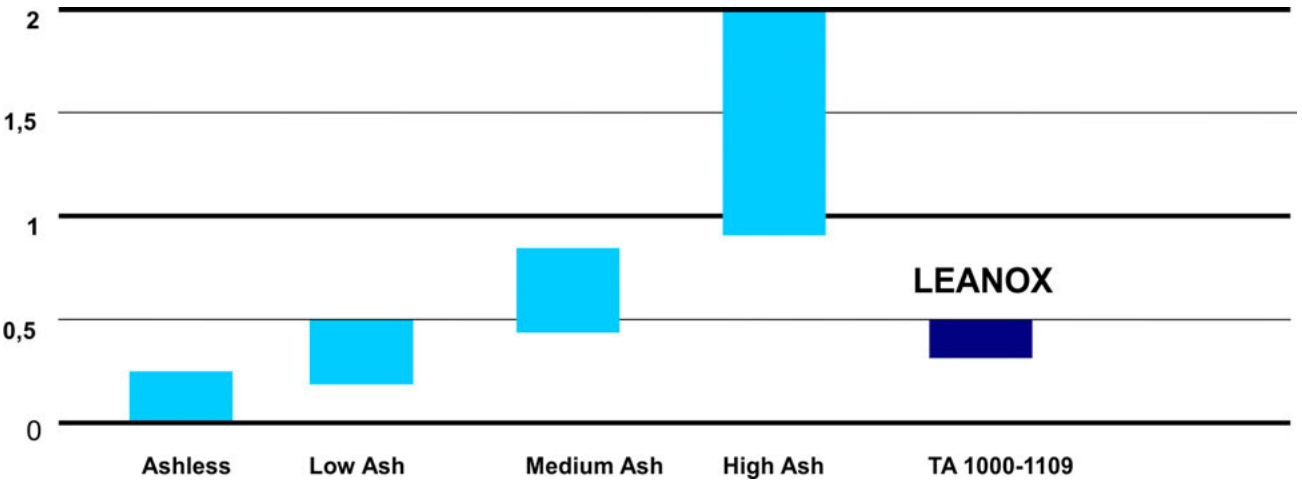

⚠ Engine oils with a high sulphate ash content are very resistant but are to be regarded as being **"unfriendly to the engine"!**

A minimum ash content in the engine is also required to achieve a **"dry lubrication effect"**.

1.3 Technical Directive (requirements)

It is obvious from this variety of requirements why engine oil plays such a decisive role in the satisfactory operation of the engine.

GE Proprietary Information: CONFIDENTIAL! Use or disclosure of data contained on this sheet is subject to the restrictions on the cover or on the first page.

The following Technical Directives apply and should be used for selection of engine oil type, establishing the durability of the engine oil and for interpreting used oil analyses.

Engine oil / lubricating oil :

Lubricating oil for GE Jenbacher engines	**1000-1109**
Approval procedure for various engine oils	**1000-0099A**
Limit values for used oil on GE Jenbacher gas engines	**1000-0099B**
Procedure for testing plant-specific oil service life	**1000-0099C**
Determining the initial pH value (ipH) for waste lube oil as defined in TI 1000-0099B	**1000-0099D**
Aid to interpreting used oil analyses of engine lubricants	**1000-0099K**
Taking lubricating oil samples / lubricating oil sampling protocol	**1000-0112**

2 Cooling Water

2.1 Functions

The function of the cooling water in the primary circuit (engine cooling water circuit) and the heating water circuit is to carry thermal energy. The cooling water in the primary circuit takes thermal energy from the engine and transfers it via heat exchangers to the heating water circuit.

2.2 Technical Directive (requirements)

Natural water can be either **acidic** (pH value less than 7) or **alkaline** (pH value more than 7). The quality of the water is also affected by the type and quantity of dissolved substances and the type and quantity of suspended particles.

- **Acidic water** attacks iron and copper components.
- **Alkaline water** attacks aluminium components. Alkaline water is also usually hard and encourages the formation of stones.

Locally available water should always be analysed before deciding whether it can be used as cooling water in a GE Jenbacher system.

If the analysed water does not meet the specified requirements (Technical Directive), then it needs to be treated accordingly. Antifreeze additive should be added to the water in accordance with Technical Directive 1000-0201 based on the local geographical and climatic conditions.

The following technical Directives apply and should help you to assess and prepare cooling water.

Cooling water:

GE Proprietary Information: CONFIDENTIAL! Use or disclosure of data contained on this sheet is subject to the restrictions on the cover or on the first page.

Quality of cooling water in closed circuits	**1000-0200**
Anti-freeze agent	**1000-0201**
Cooling water anti-corrosion additive	**1000-0204**
Quality of circuit water in hot water and warm water heating systems	**1000-0206**

3 Fuel gas

3.1 Functions

A combustible mixture of gas and air is required for combustion in the cylinder. In this process the fuel gas is the source of energy and the air is the source of oxygen.

The methane number and the calorific value are the key characteristics of the fuel gas. The methane number shows the knock-resistance of the gas and hence determines the basic engine design.

The fuel gas composition is decisive for engine design and equipment and has enormous influence over running characteristics, susceptibility to faults and durability of the gas engine.

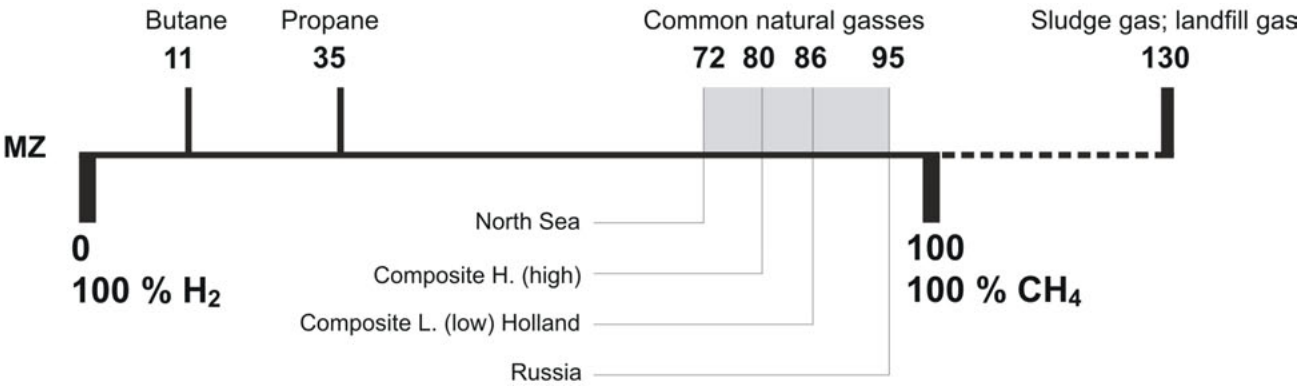

GE Proprietary Information: CONFIDENTIAL! Use or disclosure of data contained on this sheet is subject to the restrictions on the cover or on the first page.

3.2 Determining the methane number

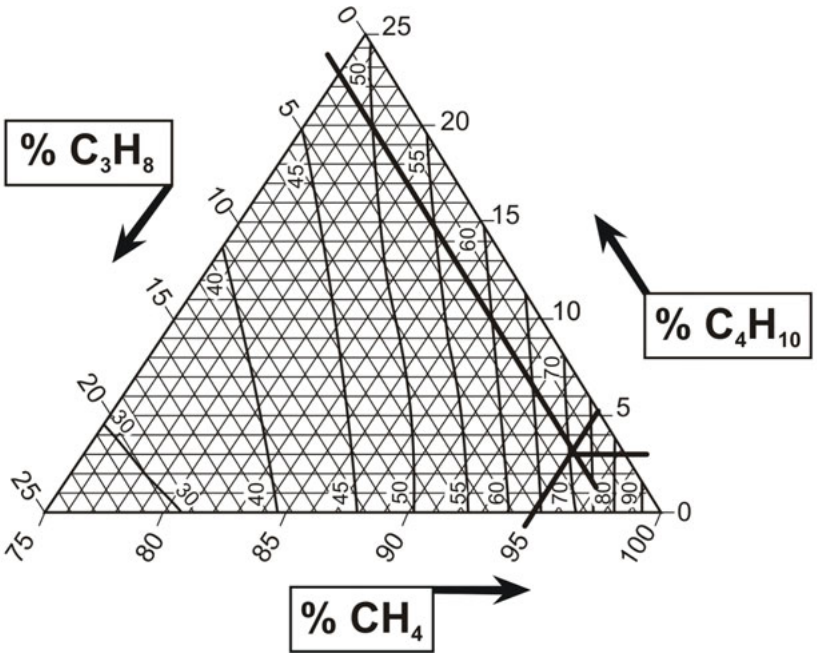

Determining the methane number

3.3 Technical Directive (requirements)

The engine is equipped for the fuel gas quality specified by the customer when the engine was ordered, and is optimised for this gas when it is first taken into operation.

For this reason it is essential that the customer service department at GE Jenbacher is notified if the fuel quality is changed.

The following Technical Directives apply and can be used to help you assess your fuel gas.

Fuel gas:

Fuel-gas quality of natural, associated petroleum, biogas and landfill gas	**1000-0300**
Fuel-gas quality of mine gas	**1000-0301**
Fuel-gas quality of special gas	**1000-0302**
Freedom from condensate of fuel gases for GE Jenbacher gas engines	**1400-0091**

GE Proprietary Information: CONFIDENTIAL! Use or disclosure of data contained on this sheet is subject to the restrictions on the cover or on the first page.

1 Operation

Switching off the engine	**1100-0105**
Regulations for running in GE generating set engines	**1400-0100**

2 Tightening torque

Torque wrench	**000-00-003**
Instructions for fitting and testing reduced-shaft bolts	**1902-0001**
Screwing and tightening torques for type 4 engines	**1902-0213**

3 Mechanical engine and system components

Checking the connecting rods	**000-00-004**
Installation of the piston – general instructions	**000-03-002**
Transit support	**1000-0044**
Pipework	**1400-0131**

4 Electrical engine and system components

Initial commissioning and maintenance of acid-filled lead storage batteries	**1000-0050**
EMC approved routing of wiring and earth connections to/between engine modules and control cabinets	**1000-0505**
Handling of electronic components/assemblies	**1000-0510**
Protective measures for installing high-voltage circuits	**1000-0515**
Gas quantity controller (TecJet 110 and 50 plus)	**1510-0064**

GE Proprietary Information: CONFIDENTIAL! Use or disclosure of data contained on this sheet is subject to the restrictions on the cover or on the first page.

5 Basic conditions

Preservation of Jenbacher modules	**1000-0004**
FX container - preservation of roof rails for roof mounting	**1000-0006**
Requirements for the module installation site	**1000-0041**
Transporting and setting up GE Jenbacher control cabinets	**1000-0043**
Lifting, transporting and placing GE Jenbacher generating sets in the engine room	**1000-0046**
Special Container (3m) – Classification and handling (Containers with top container corners at both container ends)	**1000-0048**
Jenbacher Special Container (3m) – lifting (Containers with top container corners at both container ends)	**1000-0064**
FX - roof mounting container roof	**1000-0069**
Signage on the engine room door	**1000-0330**
Installation of GE Jenbacher Units	**1100-0112**
Employee protection	**2300-0001**
Security tips when connecting GE Jenbacher Installations to the Internet	**2300-0006**

6 ignition

MORIS ignition	**1502-0068**
MPM (MORIS Power Module)	**1502-0069**
SAFI (Sensor Actor Function Interface)	**1502-0071**
SPA24 (SAFI pickup amplifier)	**1502-0072**

GE Proprietary Information: CONFIDENTIAL! Use or disclosure of data contained on this sheet is subject to the restrictions on the cover or on the first page.

1 Adjusting the torque wrench 1
2 Assembly instructions 1
3 Loosening of reduced-shaft bolts (torque-to-yield bolts) 2
4 Calibrating torque wrenches 2

1 Adjusting the torque wrench

1.1 Set the prescribed tightening torque in accordance with the manufacturer's instructions.

2 Assembly instructions

2.1 Clean the threads of bolts and nuts as well as contact surfaces. Do not re-use reduced-shank bolts (torque-to-yield bolts) damaged by corrosion, notching etc. If the pistons or bearings are damaged, new reduced-shank bolts must be used unless existing test facilities show the bolts are in perfect condition.

2.2 Oil the threads and contact surfaces lightly with fresh engine oil.

2.3 Always pull smoothly and evenly on the torque wrench. Always pull smoothly and evenly (no jerks), keeping the direction of pull at right angles to the wrench. Stop tightening immediately when the wrench releases.

2.4 Do not turn bolts on parts sitting on seals or gaskets through more than 60° to 90° in one turn, and then turn the next bolt through the same angle. After turning and tightening each bolt through the same angle, repeat this procedure until the wrench releases If tightening is carried out correctly, the each opposite bolt or screw should make the torque wrench release at the same angle when tightened.

If a greater angle should be found necessary on the second bolt, this shows that tightening has not been carried out symmetrically. In that case, slacken the first bolt until the releasing clicks of the torque wrench can all be heard for all screws at the same angle.

Always tighten crosswise, changing frequently from one bolt to another.

2.5 When tightening parts without seals or gaskets, moving from one bolt to another before reaching the tightening torque is advisable, as is crosswise tightening After tightening the bolts, apply short hard blows to the bolt head or work piece (with a light alloy or plastic mallet). Then retighten. If retightening is possible, the procedure must be repeated.

2.6 Note that it is still possible to continue tightening after the torque wrench has released. You must therefore stop tightening immediately when the torque wrench releases.

2.7 Warning! Components connected by a locking element (cannular spring-locking elements) must not be treated as described in Section 2.5 after being tightened using a torque wrench. If a blow with a mallet is applied to the thrust piece which transmits the preloading of the bolts to the locking rings, the friction of the element will be overcome and the component will be displaced. Such a blow would exert an additional load on the component, for which it is not designed, and which is therefore not permissible. The procedure mentioned in Section 2.5 (i.e. repeated retight-

GE Proprietary Information: CONFIDENTIAL! Use or disclosure of data contained on this sheet is subject to the restrictions on the cover or on the first page.

ening) could lead to a so-called 'cold welding' of parts and components, as a result of which it may be impossible to undo them again.

3 Loosening of reduced-shaft bolts (torque-to-yield bolts)

Bolts positioned opposite to each other must be loosened alternately in several sequences. Never loosen one bolt fully before loosening the other. If several bolts are involved (along a circumference), these must be loosened in a crosswise pattern in several sequences (bolt by bolt).

This loosening procedure will prevent the bolt seizing.

First loosen the bolts 1/4 turn only until the tightening torque is eliminated and the screws, bolts or nuts can be easily removed.

3.1 Important:

Never loosen reduced-shaft bolts when they are at operating temperature:

If disassembly becomes necessary immediately after engine shutdown, immediately open all crankcase covers to ensure a quicker engine cool-down. The reduced-shaft bolts to be loosened – in particular the cylinder head bolts – may not be loosened until they have cooled down to the point where they can be touched continuously (below 40 °C to 45 °C).

4 Calibrating torque wrenches

The torque wrench must be calibrated annually. It must also be calibrated whenever it is subjected to an overload or if incorrectly handled, which can affect its measuring uncertainty.

GE Proprietary Information: CONFIDENTIAL! Use or disclosure of data contained on this sheet is subject to the restrictions on the cover or on the first page.

1 General

Whenever a piston seizes, the connecting rod must be checked for axial parallelism and distortion. This technical instruction provides a general outline of the test procedure.

The dimensions and permissible tolerances should be taken from the appropriate Assembly Instructions.

2 Test procedure

The first thing to check is the small end bush (piston-pin bushing). Further testing is only of any use if the results of this check are positive.

Fasten the con-rod cap, without the bearing-shell pair, to the con-rod in accordance with the relevant instructions. Push a setting plug into the con-rod eye. The setting plug should hold the con-rod eye exactly in the centre.

Using two V-blocks, set up the con-rod on a perfectly flat plate (surface plate) as shown in Fig. 1. Use a support block to hold the set-up in place.

Take two measurements at the ends of the setting plug with a dial indicator to determine the horizontal positioning of the setting plug.

Using a dial indicator on a suitable stand or support, determine the lowest point in the bore for the big-end bearing (set the dial indicator to zero). Repeat the measurement at the lowest point on the other side of the con-rod.

The difference between the two lowest points is the measurement for axial parallelism.

A considerably more accurate measurement can be made using two special test plugs. One of these two special test plugs (the one in the bore for the con-rod bearing shell) is supported exactly horizontally at each side on two ball bearings. After the test set-up has assumed equilibrium, the oblique position of the special plug in the con-rod eye is ascertained by comparing the two measurements taken on the con-rod.

When measuring the distortion:

Move the set-up as described above (setting plug in the V-blocks on the support plate) into the horizontal position (Fig. 2). After re-checking the horizontal position of the setting plug with a dial indicator, compare the lowest point of the bore for the big-end bearing on the one side to the lowest point for the big-end bearing on the other side.

If either of the two tolerance limits is exceeded, replace the con-rod with a new one.

Please note: The permissible tolerance limits for distortion are not given in the individual Assembly Instructions. Instead, you generally double the value of the axial parallelism to obtain these tolerances. If a different distortion value applies to a particular con-rod model, this is specifically stated in the relevant Assembly Instructions.

GE Proprietary Information: CONFIDENTIAL! Use or disclosure of data contained on this sheet is subject to the restrictions on the cover or on the first page.

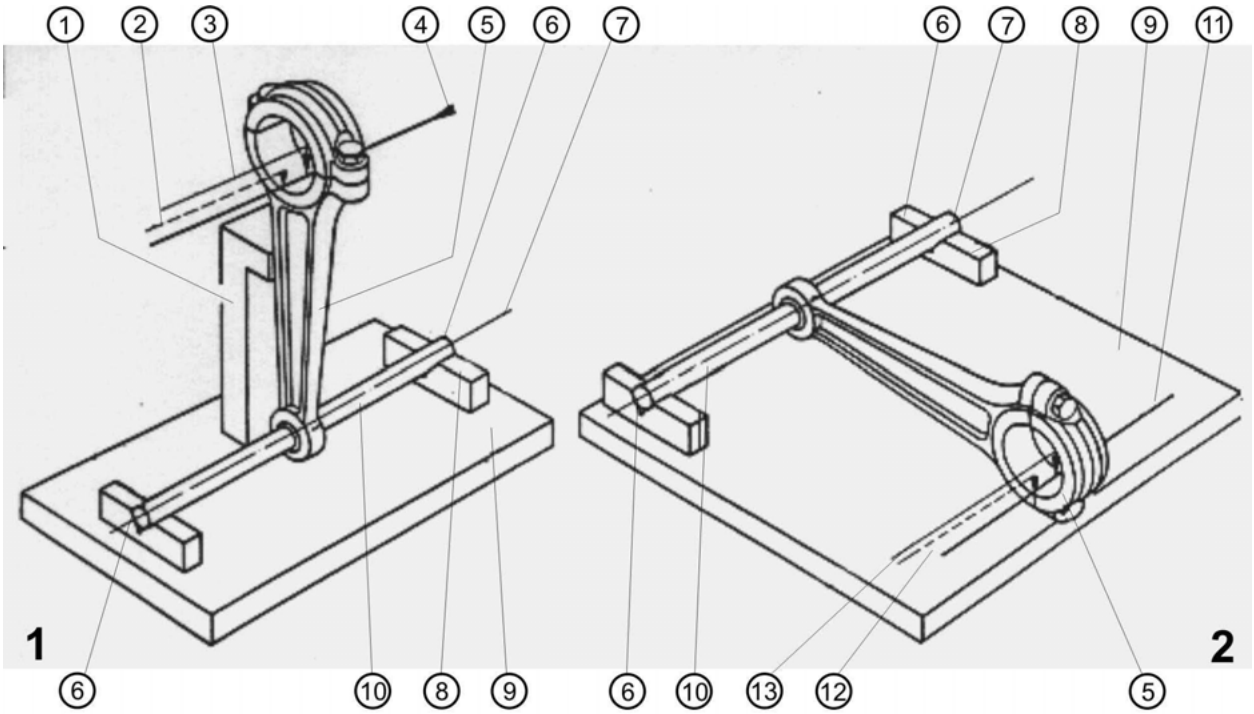

①	Support block	⑧	V-blocks
②	Front lowest point (measurement point) for measuring the axial parallelism	⑨	Surface plate
③	Rear lowest point (measurement point) for measuring the axial parallelism	⑩	Setting plug
④	Reference horizontal for measuring the axial parallelism	⑪	Reference horizontal for measuring the distortion
⑤	Connecting rod	⑫	Front lowest point (measurement point) for measuring the distortion
⑥	Measurement point for checking the horizontal position of the plug	⑬	Rear lowest point (measurement point) for measuring the distortion
⑦	Axis of the setting plug		

GE Proprietary Information: CONFIDENTIAL! Use or disclosure of data contained on this sheet is subject to the restrictions on the cover or on the first page.

1 Remark

This instruction does not apply to a specific type of piston but is a general summary of the points to be observed when installing or assembling pistons. For details of individual types of piston, refer to the appropriate Assembly Instructions.

Only defect-free, properly cleaned and lightly lubricated (engine oil) pistons should be installed. The holes and grooves in the pistons and oil scraper rings should not be clogged.

Do not confuse piston parts when changing them. Previously used pistons should be placed back in the cylinders to which they belong.

2 Piston rings

The piston rings must be installed in the proper sequence, using suitable piston-ring pliers (supplied on request) (Fig. 2).

Attention: The sequence is given in the relevant parts list or Assembly Manual.

If there is no fixing to position the rings, proceed as follows:

After assembly, turn the the piston rings until the slot on the second ring is at an angle of 180° to the first ring, the third ring is at 90° to the second ring and the fourth ring is at 180° to the third ring, etc. (Fig. 3).

Piston rings which have to be installed in a particular position are marked with "TOP" on the top side, facing the crown of the piston.

3 Piston pin

The piston pin bearing can be of the snug-fit or press-fit type. If it is of the snug-fit type, lubricate the pin, insert the pin into the piston bore and secure the pin using the retainer ring.

If it is of the press-fit type, heat the piston in an oil bath (to approx. 120°C) and fit a retainer ring. If the pin gets stuck in the piston, you must stop further assembly: let the piston cool down and heat the piston head in a shallow oil bath. Remove the pin. Now heat the entire piston and reassemble the pin. Do not tilt the connecting rod during assembly.

4 Piston pin retainer

Make sure to use suitable pliers when fitting the retainer rings. Make sure that the retainer ring engages the groove correctly. To check this, try turning the retainer ring in the groove. If the ring cannot be turned, it has not been fitted properly. Remove the retainer ring and fit it correctly. Always use piston ring pliers when fitting the piston into the cylinder liner (Fig. 1).

GE Proprietary Information: CONFIDENTIAL! Use or disclosure of data contained on this sheet is subject to the restrictions on the cover or on the first page.

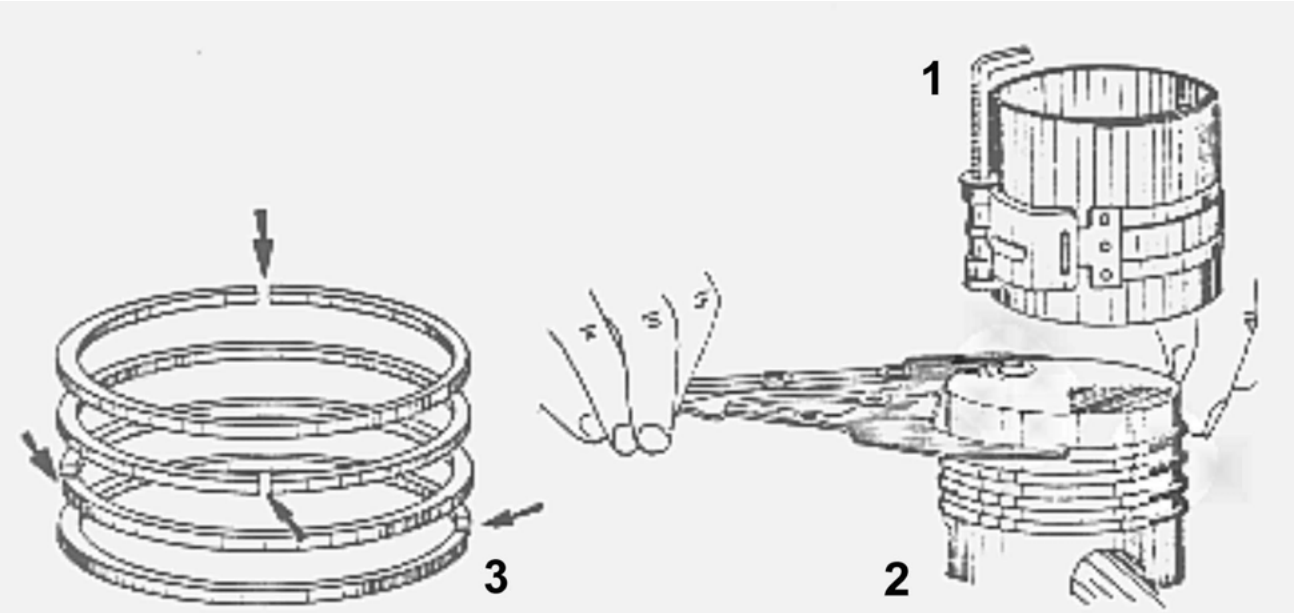

GE Proprietary Information: CONFIDENTIAL! Use or disclosure of data contained on this sheet is subject to the restrictions on the cover or on the first page.

1 Scope 1
2 Storage 1
3 Corrosion protection and packaging products 1
4 Inside engine preservation 3
5 Closing all openings 3
6 Outside engine preservation / preservation of electrical/mechanical module parts 4
7 Entire module 7

1 Scope

The current technical instruction applies to Jenbacher modules that will be stored for up to 12 months (before commissioning). In the case of prolonged storage, the following preservation procedure must be repeated after 12 months!

2 Storage

The modules must be stored in such a way that these are never subjected to

- direct adverse weather conditions (rain, snow, dew, mist and spray),
- exposed top adverse conditions due to drift sand, aggressive gases, hygroscopic substances and

harmful animals/insects.

3 Corrosion protection and packaging products

Material / Product	Remark
Spray gun	Commercially available compressed-air or electric spray gun When preserving the cylinder liner, use a spraying hose to prevent the cylinder face from becoming damaged.
Cooling water anti-corrosion additive	DREW AMEROID - Maxigard
Preservation oil (TL.NR.: 298843)	AVIA Avilub Metacorin 812
Lubricating grease	Commercially available lubricating grease

GE Proprietary Information: CONFIDENTIAL! Use or disclosure of data contained on this sheet is subject to the restrictions on the cover or on the first page.

Material / Product	Remark
Preservation wax (TL.NR.: 400296)	 Dinitrol 81
Surface protection (TL.NR.: 197268)	 BRANOtect anti-corrosion spray

GE Proprietary Information: CONFIDENTIAL! Use or disclosure of data contained on this sheet is subject to the restrictions on the cover or on the first page.

Material / Product	Remark
Oil paper	
Adhesive tape (incl. dispenser)	
Corrosion inhibitor (TL.NR.: 285878)	
Foil	Commercially available construction foil (thickness ~0.2 mm)

4 Inside engine preservation

- **Cooling water system / water chambers:**
  Flush the entire cooling water system using an antifreeze with anticorrosive additive (according to TI 1000-0204).
  Fully drain the cooling water while the engine is still at operating temperature and immediately open all water inlet and drain openings to enable venting. Normally, all water chambers must be fully drained because of risk of freezing.
  Do not close the openings and drain and bleed valves until the engine is fully cooled down.
- **Crankcase and oil chambers:**
  having completed the engine test run, fully drain the lubricating oil while the engine still is at operating temperature.
  Do not close all openings and drain valves until the engine is fully cooled down.
- **Cylinder liners:**
  remove the spark plugs and spray preservation oil (Avialub Metacovin 812) into the cylinders using a spray gun. Make sure that the cylinder liners are fully covered with a thin protective layer.
  Re-fit the spark plugs when finished.

5 Closing all openings

Close all openings such as cooling water connections, intake line, exhaust gas manifold, gas inlet and/or openings before mixer, or oil connections using blind covers with counter flange.

GE Proprietary Information: CONFIDENTIAL! Use or disclosure of data contained on this sheet is subject to the restrictions on the cover or on the first page.

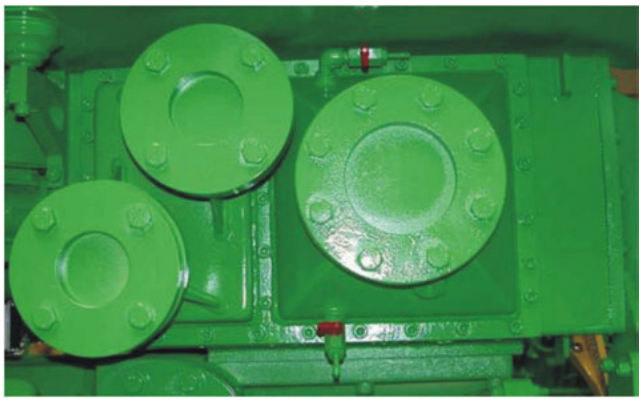

6 Outside engine preservation / preservation of electrical/mechanical module parts

- **Untreated parts:**
  spray using BRANOtect anti-corrosion spray.
  In the case of larger surfaces (e.g. for type 6 engines to which the generator is not attached), spray Dinitrol 81 preservation wax across the flywheel side.

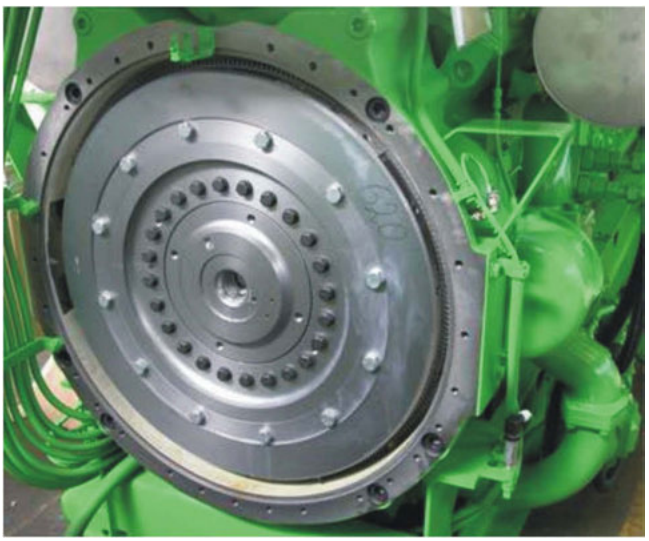

Engine turning gear:

GE Proprietary Information: CONFIDENTIAL! Use or disclosure of data contained on this sheet is subject to the restrictions on the cover or on the first page.

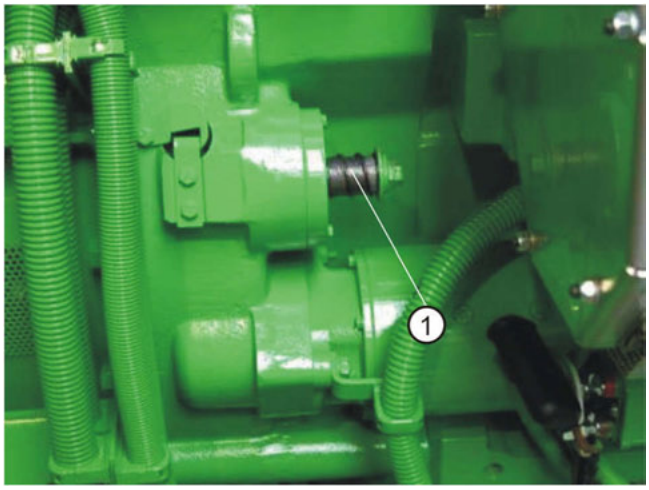

①	Greasing

- **Knock sensors (if installed):**
  Wrap in oil paper.

- **Plate heat exchanger:** no preservation measures required.

- **Table cooler (if installed):**
  because it is difficult to drain the table cooler completely, it must be flushed with anti-freezing agent.

- **Exhaust-gas manifold cladding:** no preservation measures required.

- **Air filter**
  seal using oil paper.

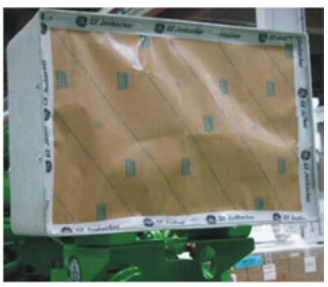

- **Generator:**
  3 pc Affix 3 corrosion inhibitors inside the terminal box.
  Seal any cooling-air openings and other openings of the terminal box using oil paper.

GE Proprietary Information: CONFIDENTIAL! Use or disclosure of data contained on this sheet is subject to the restrictions on the cover or on the first page.

When the generator is out of service for a prolonged period, the rotor must be rotated every two months to ensure that the rolling elements change position (a small change of position will suffice).

Do not rotate the rotor at the fan but use the engine flywheel!

Remove any transport safety pegs prior to turning. Once you have finished turning the rotor, do not forget to fit the transport safety pegs!

- **Gearbox (optional):**
  Fill with gear oil according to IW 8071 A0.
  Now seal the gearbox airtight.
  As prolonged standstill periods (>18 months) - especially the airtight sealing - can cause a build-up of condensation in the gearbox, the gear oil must be changed before commissioning according to IW 8071 A0.
  Caution: water – even in minute quantities – can cause pitting!
  Spray all bright parts (e.g. shaft) with a surface protection agent (BRANOtect anti-corrosion spray - part No.: 197268).
  Fit a warning plate with the following message:
  Warning! This gearbox has been given long-term preservation and must not be opened.
  When the generator is out of service for a prolonged period the gearbox shaft must be rotated every two months to ensure that the rolling elements change position (a small change of position will suffice).

- **Various switchgear cabinets, ignition box, interface:**
  Affix a corrosion inhibitor inside each of the above.

- **Actuator:**no preservation measures required.

- **Control rod assembly:**

GE Proprietary Information: CONFIDENTIAL! Use or disclosure of data contained on this sheet is subject to the restrictions on the cover or on the first page.

Grease pivot points using a grease gun at the grease nipples. Remove the excess grease and apply a grease film to the left and right-hand side of the bearing gap to protect against dust.

Battery:see 1000-0050

7 Entire module

Cover in foil.

Annex Check list

Photodocumentation sent to GE Jenbacher

Yes No

Preservation carried out as per TI 1000-0004

Yes No

If yes, who did the preservation .....

If yes, when was the preservation done .....

Visual inspection of preservation sheeting (engine sheeting)

Preservation sheeting available on site

Yes No

Sheeting in good condition, no cracks

Yes No

Generator visual inspection

Generator rotor regularly turned as per maintenance instruction W8030 A0.

Yes No

Maintenance protocol available

Yes No

Who carried out the maintenance and when .....

Engine inspection

Combustion chambers in as-new condition

Yes No

Signs of corrosion visible

Yes No

If yes, additional photos sent to GE Jenbacher

Yes No

Combustion chambers in bad condition

GE Proprietary Information: CONFIDENTIAL! Use or disclosure of data contained on this sheet is subject to the restrictions on the cover or on the first page.

Yes No

Cooling water pump for types 4/6 engines

(a new set of gaskets must be fitted on commissioning)

Gasket set available on site

Yes No

Name: ..... **Date:** .....

Signature: .....

GE Proprietary Information: CONFIDENTIAL! Use or disclosure of data contained on this sheet is subject to the restrictions on the cover or on the first page.

1 Safety

See TI 2300-0005 for safety instructions!

Extreme caution is required when carrying out work on the container roof. **Ensure that all persons on the roof are always secured against falling off the container using personal protection equipment! Anyone climbing onto the container roof will do so at his own risk!**

Wear safety belt / danger of falling!

Climbing onto the container roof without wearing a safety belt is extremely dangerous!

Secure the belt to the positions on the container roof especially provided for this purpose!

GE Proprietary Information: CONFIDENTIAL! Use or disclosure of data contained on this sheet is subject to the restrictions on the cover or on the first page.

1.1 Container roof preservation

Fit the spray gun with a can.
Preservation agent: DINITROL 3850-A

Connect the spray gun with can to a pressurised air supply (see photograph 2).

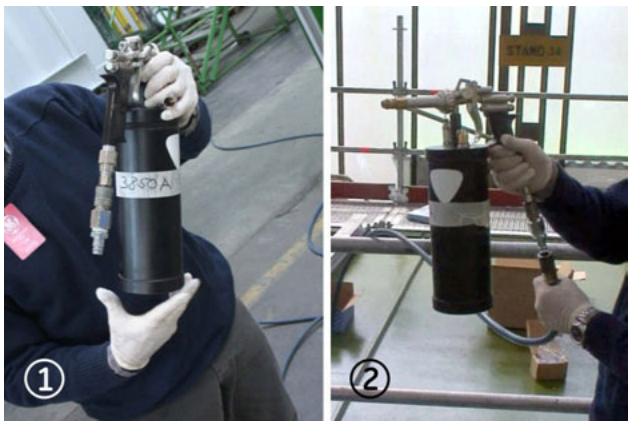

GE Proprietary Information: CONFIDENTIAL! Use or disclosure of data contained on this sheet is subject to the restrictions on the cover or on the first page.

Connect the preservation shoe to the spray gun (see photograph 1).

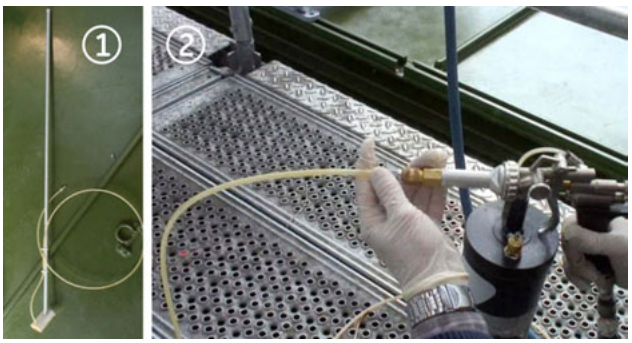

Position the preservation shoe on the assembly rails, activate the spray gun and slide it along the rails.

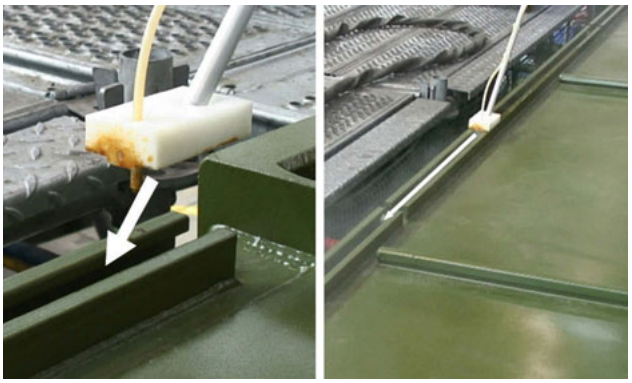

Please note: The inside surfaces of the roof rails must be sufficiently preserved.
Make sure to adjust the spray volume and working speed accordingly!

If the I beams have already been assembled to the container roof, a hand spray gun can be used to apply preservation agent under the assembly locations. See photograph

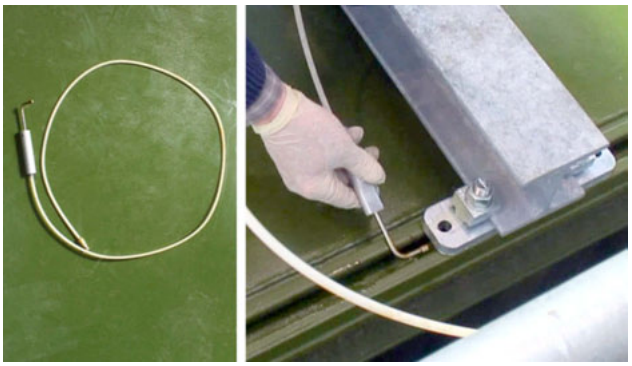

If possible, preservation should not be carried out in closed spaces.
In all other cases, preservation may only be carried out if no other staff is in the immediate vicinity!

GE Proprietary Information: CONFIDENTIAL! Use or disclosure of data contained on this sheet is subject to the restrictions on the cover or on the first page.

1 Purpose **1**
2 General **1**
3 Arrangement surface **1**
3.1 Load-bearing capacity of the arrangement surface 1
3.2 Size of the arrangement surface 1
3.2.1 Modules 1
3.2.2 Container trailer 2
3.2.3 Container 2
3.3 Flatness requirements for the arrangement surface 2
3.3.1 Modules 2
3.3.2 Container trailer 2
3.3.3 Container 2
3.3.4 If the contractor intends to use a grouting compound to meet the flatness criteria, the following minimum requirements should be met 2
3.4 Surface treatment of the arrangement surface 3

1 Purpose

This Technical Instruction describes the requirements for the arrangement surface of GE Jenbacher plants in terms of flatness, dimensions and load-bearing capacity.

2 General

The particular advantages of our basic engine conception are the high speed and the special balance of the moved masses. Based on these characteristics, the requirements in terms of the static and dynamic load-bearing capacity of the arrangement surface are minimal.

However, because of the specially designed frame construction of our elastic module bearings (engine and generator), very strict requirements have been laid down in terms of the flatness of the arrangement surface.

3 Arrangement surface

3.1 Load-bearing capacity of the arrangement surface

The arrangement surface must be capable of withstanding the static and dynamic loads of GE Jenbacher plants.

Static load = Plant weight
Dynamic load = ≤3% of plant weight

3.2 Size of the arrangement surface

The arrangement surface can be either a pedestal, a paved surface or the engine-room floor.

3.2.1 Modules

The standard size of the arrangement surface is (frame length +200 mm [7,874 in]) x (frame width +200mm [7,874 in]).

GE Proprietary Information: CONFIDENTIAL! Use or disclosure of data contained on this sheet is subject to the restrictions on the cover or on the first page.

If an oil collection tray is used as an option, make sure that the dimensions of the arrangement surface at least match those of the oil collection tray.

3.2.2 Container trailer

The standard size of the arrangement surface is (trailer length +200 mm) x (trailer width +200 mm).

3.2.3 Container

The container arrangement surface can be either a strip or a slab foundation.

The surface dimensions are contained in the foundation plan or the a base-frame drawing.

3.3 Flatness requirements for the arrangement surface

3.3.1 Modules

Contrary to the standards formulated and valid at this time, it has been agreed that the flatness requirement for the arrangement surface of the installation will be increased to ± 1.5mm measured across the entire arrangement surface.

3.3.2 Container trailer

The trailer is installed horizontally (check using a spirit level). Use shims if necessary.

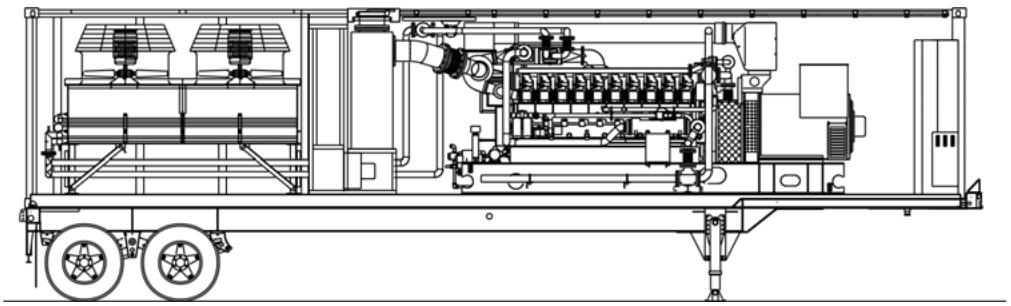

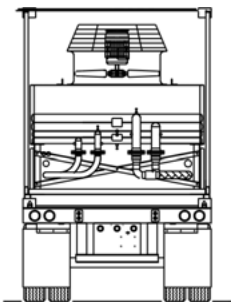

3.3.3 Container

The containers are normally supplied with support plates to enable the container to be arranged horizontally.

3.3.4 If the contractor intends to use a grouting compound to meet the flatness criteria, the following minimum requirements should be met

1. Minimum amount of swelling 0.1%
2. Volume stability
3. Resistance to pressure

Pressure resistance must be at least 25 N/mm² after 24 hours. After 56 and 90 days respectively, there should be no noticeable reduction in the resistance to pressure.

GE Proprietary Information: CONFIDENTIAL! Use or disclosure of data contained on this sheet is subject to the restrictions on the cover or on the first page.

Any remaining unevenness can be compensated by inserting plates between the module arrangement surface and the Sylomer strips.

The shim plate thickness must correspond to the deviation (between the plant arrangement surface and the sylomer strips) plus ~ 2 mm.

3.4 Surface treatment of the arrangement surface

It is advisable to make the arrangement surface oil- and water-resistant by applying a protective coating.

Many grout products are already water- and oil-resistant, in which case a protective coating is not required.

GE Proprietary Information: CONFIDENTIAL! Use or disclosure of data contained on this sheet is subject to the restrictions on the cover or on the first page.

1 Purpose 1
2 transport 1
3 Setting up switchgear cabinets 4

1 Purpose

This Technical Instruction describes the transport or movement of GE Jenbacher switchgear cabinets.

2 transport

Electrical switchgear cabinets are transported upright and wrapped in foil:

GE Proprietary Information: CONFIDENTIAL! Use or disclosure of data contained on this sheet is subject to the restrictions on the cover or on the first page.

on disposable pallets:
with the internal foot of the cabinet
bolted to the
pallet.

on Euro pallets:
the switchgear cabinet is secured
to the pallet with strapping (see the Figure).

GE Proprietary Information: CONFIDENTIAL! Use or disclosure of data contained on this sheet is subject to the restrictions on the cover or on the first page.

In a container
the switchgear cabinet is lashed
securely without a pallet (see the Figure).

GE Proprietary Information: CONFIDENTIAL! Use or disclosure of data contained on this sheet is subject to the restrictions on the cover or on the first page.

3 Setting up switchgear cabinets

Always use the lifting lugs mounted on top of the switchgear cabinet (see the Figure) when setting up or transporting it. Make sure that you always use two opposite lifting lugs when using a crane to transport the cabinet.

Alternatively, once set up, the switchgear cabinet can be moved on a transport pallet by means of a suitable fork-lift device.

The risk of slipping and tipping must be prevented by securing the cabinet with retaining straps.

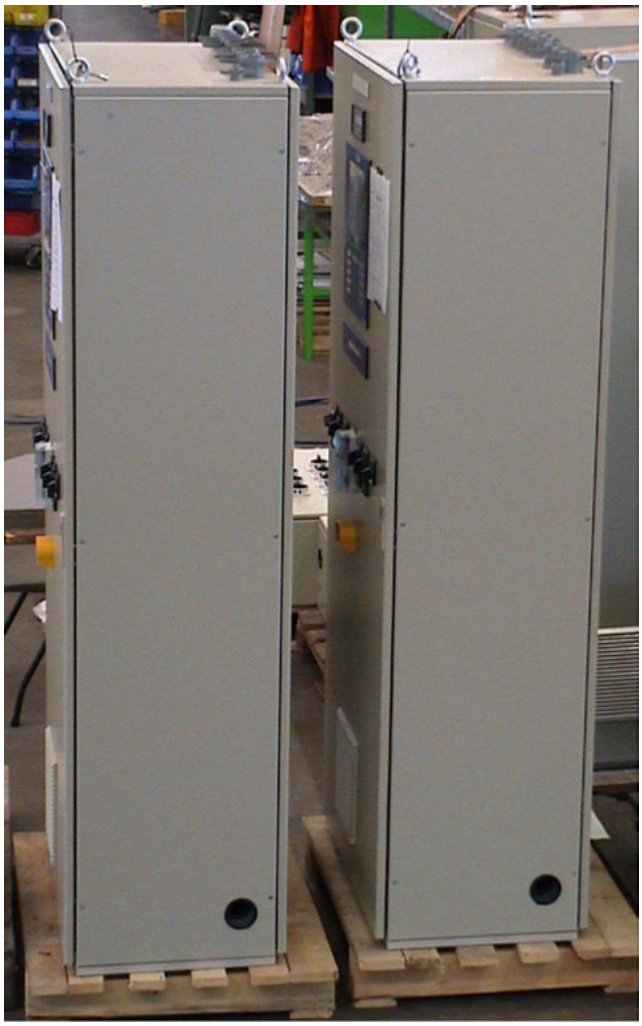

GE Proprietary Information: CONFIDENTIAL! Use or disclosure of data contained on this sheet is subject to the restrictions on the cover or on the first page.

1 Tips 1
2 Location of transport safety pegs 1
2.1 Type 3 engines 1
2.2 Type 4 engines 2
2.3 J 612/616/620 3
2.4 J 624 4

1 Tips

The yellow transport pegs protect the engine and the elastic engine and generator bearings from being damaged on the way to their destination.

Always remove the transport safety pegs before commissioning begins!

2 Location of transport safety pegs

2.1 Type 3 engines

In the gear wheel housing to secure the crankshaft

Above the starter

Next to the engine turning gear

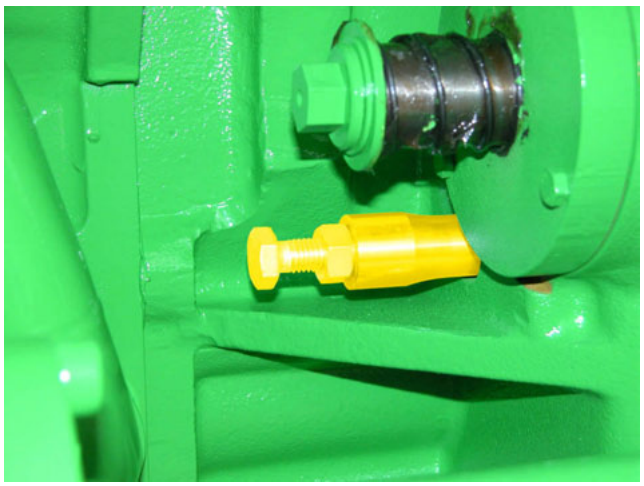

Remove spacer sleeve, nut and bolt

Between the frame and the engine (on the elastic bearing)

GE Proprietary Information: CONFIDENTIAL! Use or disclosure of data contained on this sheet is subject to the restrictions on the cover or on the first page.

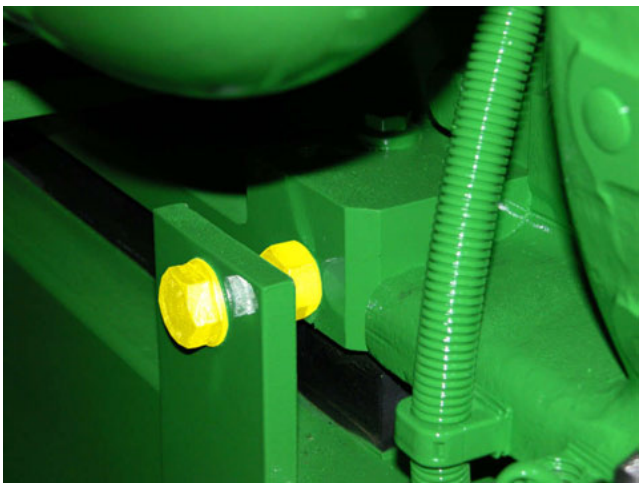

Remove bolt, filler ring and nut

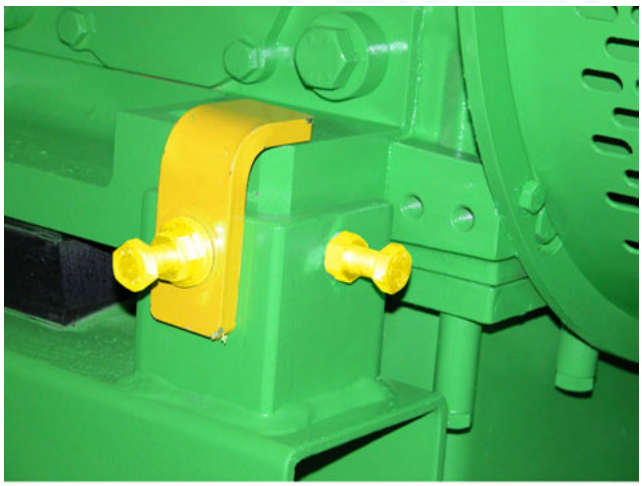

Remove bolt, nut, filler ring and stop square

2.2 Type 4 engines

on the timing cover

to lock the crankshaft

Below the starter on both engine sides!

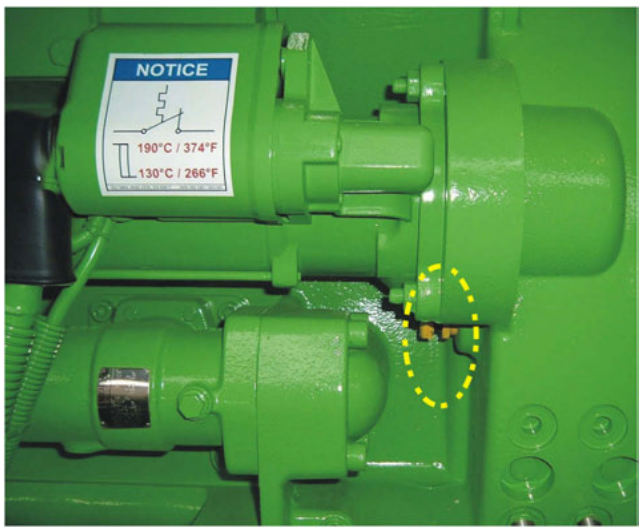

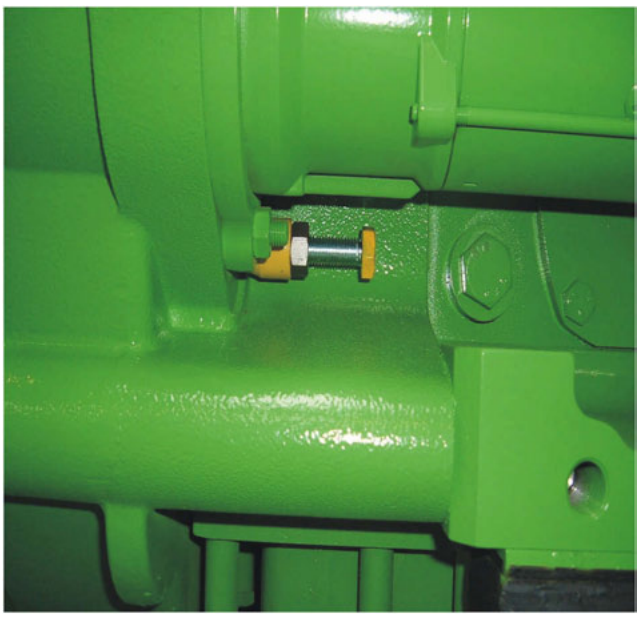

Remove spacer sleeve, nut and bolt

GE Proprietary Information: CONFIDENTIAL! Use or disclosure of data contained on this sheet is subject to the restrictions on the cover or on the first page.

Between the frame and the engine (on the elastic bearing)

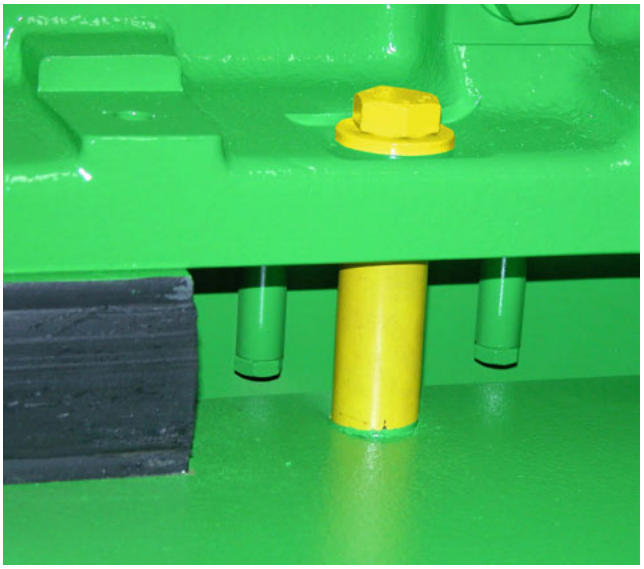

Between the frame and the generator (at the elastic bearing)

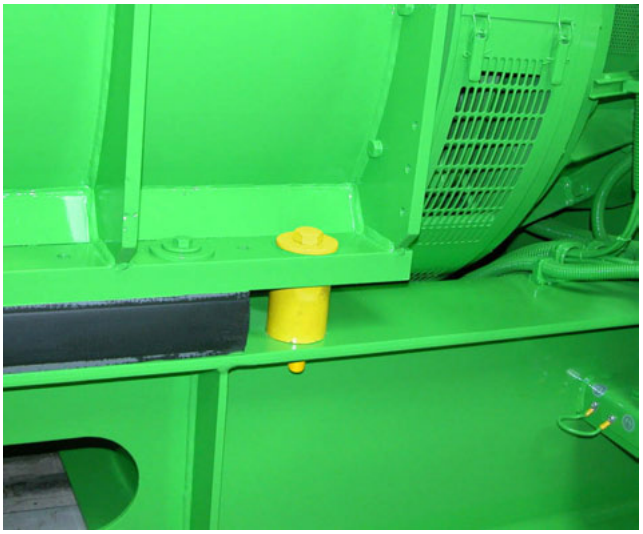

Remove bolt, filler ring, nut and spacer sleeve

2.3 J 612/616/620

Between the frame and the engine (on the elastic bearing)

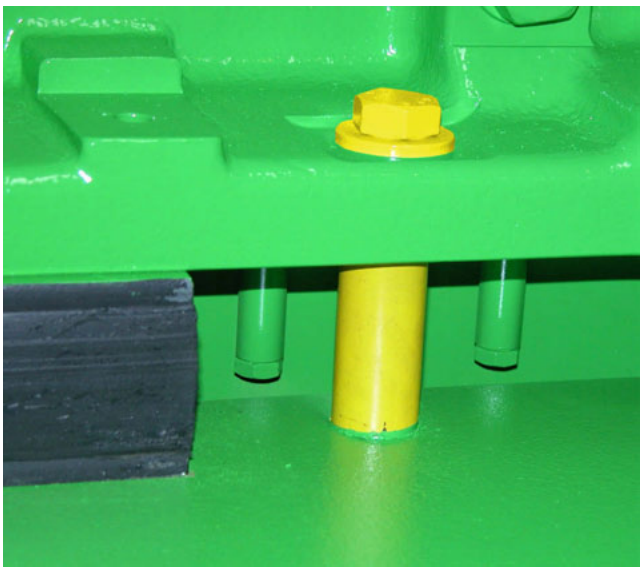

Between the frame and the generator (at the elastic bearing)

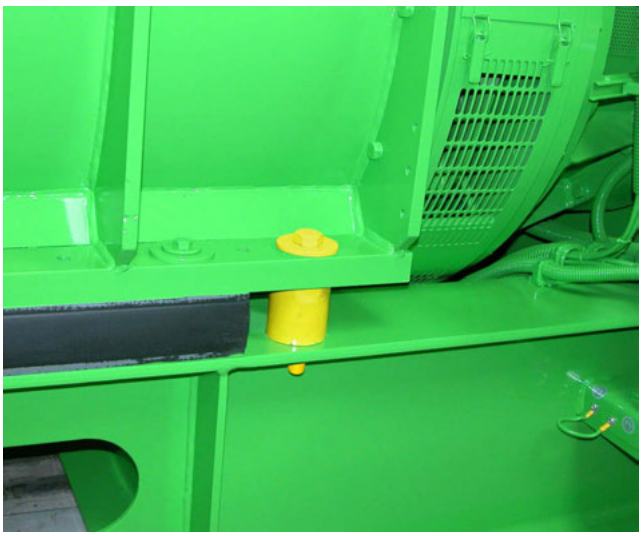

Remove bolt, filler ring, nut and spacer sleeve

GE Proprietary Information: CONFIDENTIAL! Use or disclosure of data contained on this sheet is subject to the restrictions on the cover or on the first page.

On transmission housings (optional)

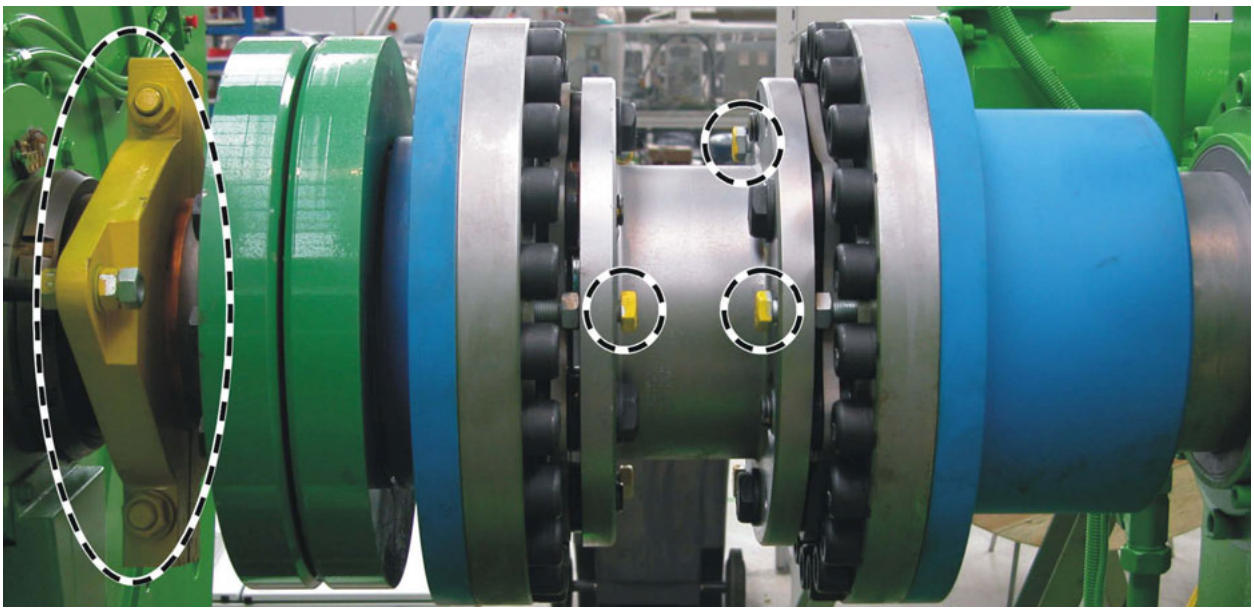

Remove clamping rings, copper plates, bolts, nuts, filler rings and set screws

2.4 J 624

Between the frame and the engine (on the elastic bearing)

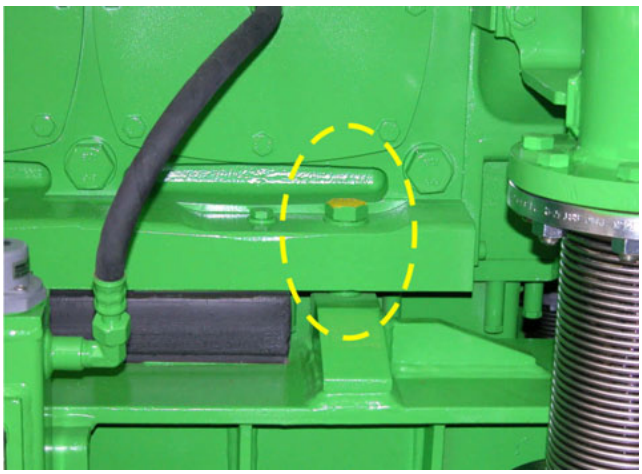

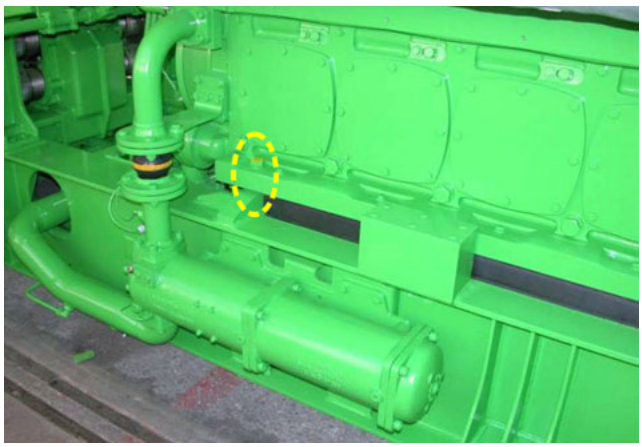

Remove the bolt and washer

Between the frame and the generator (at the elastic bearing)

GE Proprietary Information: CONFIDENTIAL! Use or disclosure of data contained on this sheet is subject to the restrictions on the cover or on the first page.

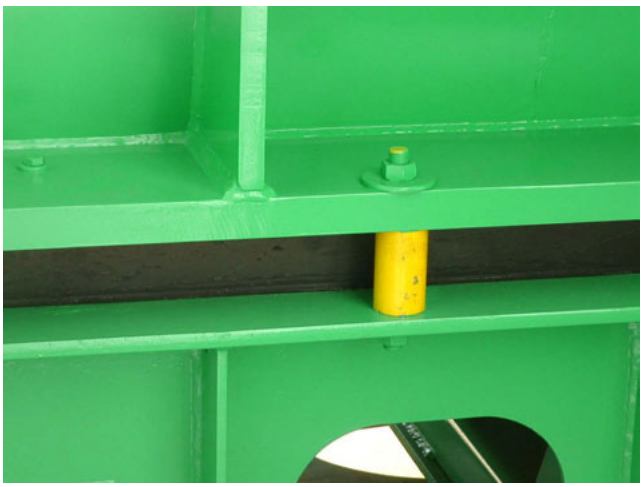

Remove bolt, filler ring, nut and spacer sleeve

GE Proprietary Information: CONFIDENTIAL! Use or disclosure of data contained on this sheet is subject to the restrictions on the cover or on the first page.

Technical Instruction: TA 1000-0046
Lifting and transporting GE Jenbacher modules and positioning them in engine rooms

1 Purpose 1
2 Lifting 2
2.1 Load suspension device 2
2.2 Lifting Type 6 E standard engine and Type 4 standard module 3
2.3 Lifting the J 624 GS engine - G version 6
2.4 Lifting the J 624 TSTC engine - H version 9
2.5 Generator 11
3 Transport on transport vehicles 11
3.1 General instructions: 11
3.2 Rail transport 12
4 Positioning in the engine room 14
4.1 Positioning Type 6 E/F and J 624 GS engine and Type 4 module 14
4.2 Positioning a generator 15
5 Engines and modules cannot be put into place using a crane 16
5.1 Lowering on to rollers 16
5.2 Moving on rollers 16
5.2.1 Pulling with a forklift or a cable winch 17
5.2.2 Pushing with a forklift or manpower 17
5.3 Transferring on to steel rollers/tubes 17
5.4 Transferring onto rollers 19
5.5 Place sylomer strips underneath the generator. 20
5.6 Checking the sylomer strips 22
5.7 Inserting shims 22
6 The generator cannot be put into place using a crane 23
6.1 Lowering on to rollers 23
6.2 Moving on rollers 23
6.2.1 Pulling with a forklift or a cable winch 23
6.2.2 Pushing with a forklift or manpower 23
6.3 Transferring onto rollers 24
7 Coupling the generator and engine to each other 24
7.1 With non-elastic coupling housing 24
7.2 Using elastic coupling housing (type 6 engine) 28
7.3 Measure the radial play of the elastic coupling housing (type 4 engine). 29
8 Erection of sets with gearboxes 30
8.1 Transporting generator frame with generator and gearbox 30
8.2 Set-up 30

Applies to GE Jenbacher **modules with split module frame and type 4 engines.**

1000-0041

1000-0044

1 Purpose

This Technical Instruction describes how to lift GE Jenbacher modules, transport them on transport vehicles and position them in engine rooms. It also describes the correct use and maintenance of the load suspension device (lifting equipment, chains, ropes, etc.).

GE Proprietary Information: CONFIDENTIAL! Use or disclosure of data contained on this sheet is subject to the restrictions on the cover or on the first page.

The module arrangement surface must comply with the requirements specified in Technical Instruction 1000-0041.

2 Lifting

Always check that the load suspension device is ready for use (refer to User Guidelines) before using it.

2.1 Load suspension device

Normal operating conditions

These load suspension devices are designed to lift GE Jenbacher modules in accordance with the relevant European and national standards, subject to the restrictions listed below.

User guidelines

Make sure that the load suspension device is only used by a trained operative. When using the load suspension device, always make sure that

- should not have suffered damage that may have an adverse effect on safety and functioning (e.g. fractures, notches, cracks, cuts, erosion, distortion, damage as a result of heat impact, etc.),
- there are no knots or distortions,
- the device is not run across sharp edges without the necessary precautions being taken,
- the device is not overloaded due to jolting,
- the device is not used to lift loads in excess of its lifting capacity as specified on the plate (lifting capacity plate, type plate, label),
- the device is not loaded unsymmetrically without the necessary precautions being taken,
- the device is handled and loaded appropriately when using shortening devices

Failure to observe the above instructions and improper use of the device can result in bodily injury and damage to property

Maintenance

Make sure that the load suspension device is checked by an expert at least once a year for external damage, distortions, wear and corrosion, cracks and breaks and rejected if the defects found are in excess of tolerance values. When carrying out maintenance work, do not make any modifications to the load suspension device which will affect its operation and lifting capacity.

Restrictions on the use of the load suspension device

In the event of high temperatures, the lifting capacity of the load suspension device must be reduced accordingly. Always check whether the load suspension device can be used in aggressive environments before actually using it.

Never use the load suspension device in circumstances in which the load could accidentally become detached.

GE Proprietary Information: CONFIDENTIAL! Use or disclosure of data contained on this sheet is subject to the restrictions on the cover or on the first page.

2.2 Lifting Type 6 E standard engine and Type 4 standard module

Please read and follow the instructions on the stickers affixed to engine and lifting equipment.

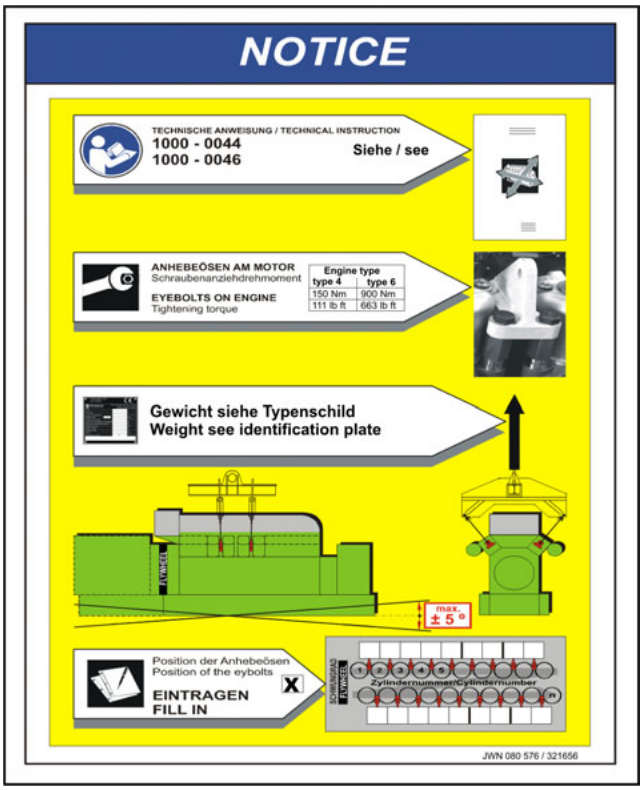

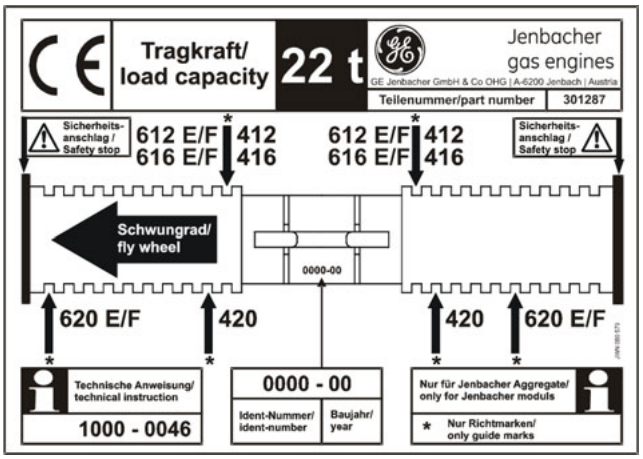

Attach the lifting lugs to the engine.

Tightening torque:

GE Proprietary Information: CONFIDENTIAL! Use or disclosure of data contained on this sheet is subject to the restrictions on the cover or on the first page.

Type 6E --> **900 Nm**
Type 4 --> **150 Nm**

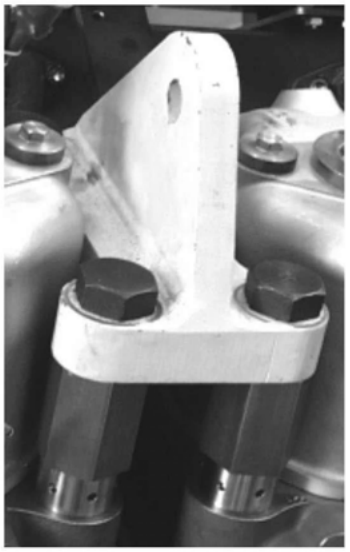

Engine type	Version	To be fitted between the cylinder heads			
J 620	E/F	4/5	8/9	14/15	18/19
J 616	E/F	5/6	6/7	13/14	14/15
J 612	E/F	4/5	5/6	10/11	11/12
J 420		2/3	4/5	12/13	14/15
J 416		1/2	3/4	9/10	11/12
J 412		1/2	3/4	7/8	9/10

Cylinder number 1 is located on the left side of the engine when facing the flywheel.

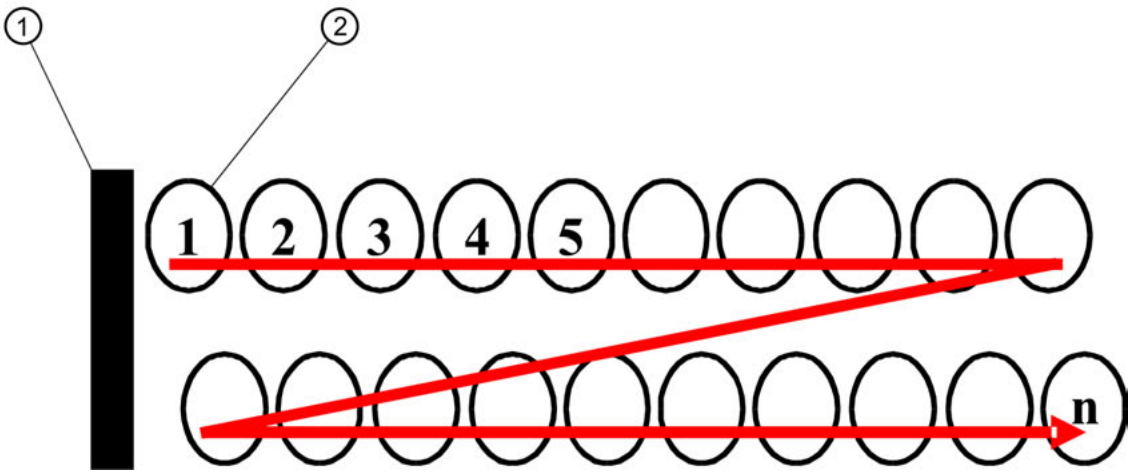

①	Flywheel	②	Cylinder number 1

GE Proprietary Information: CONFIDENTIAL! Use or disclosure of data contained on this sheet is subject to the restrictions on the cover or on the first page.

Attach the lifting equipment to the lifting lugs and hoist the module with a crane or mobile crane.

Make sure when attaching the lifting equipment that the angle of force is consistent with the V-angle.

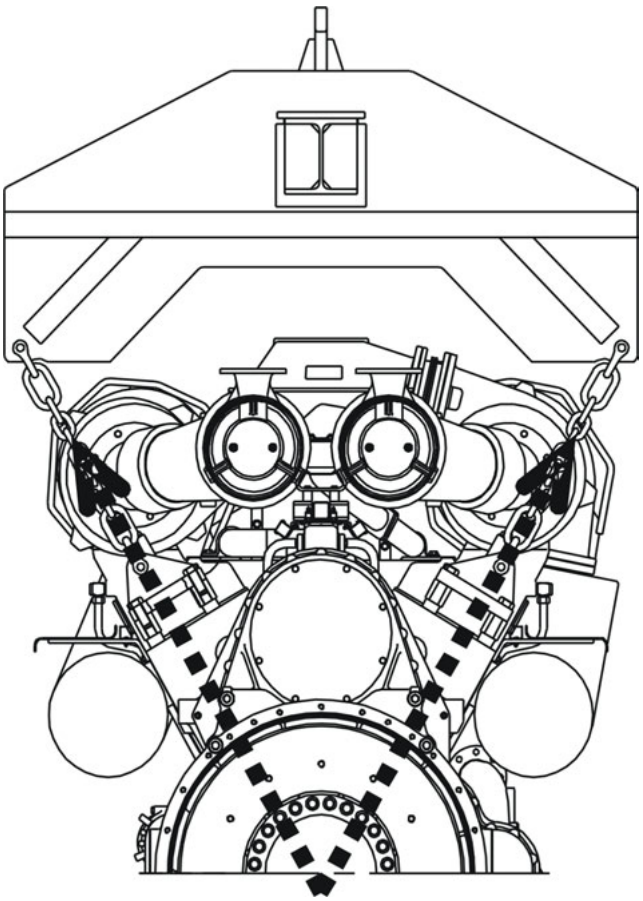

When hoisting the module, always make sure that its maximum permissible angle of inclination lengthwise does not exceed 5°. If the angle exceeds 5°, stop the hoisting procedure immediately!

Before hoisting the module again, first adjust the hook-in points on the hoisting rig so that the permissible angle of inclination is not exceeded.

The hook-in points as shown on the hoisting rig sticker are for guidance only!

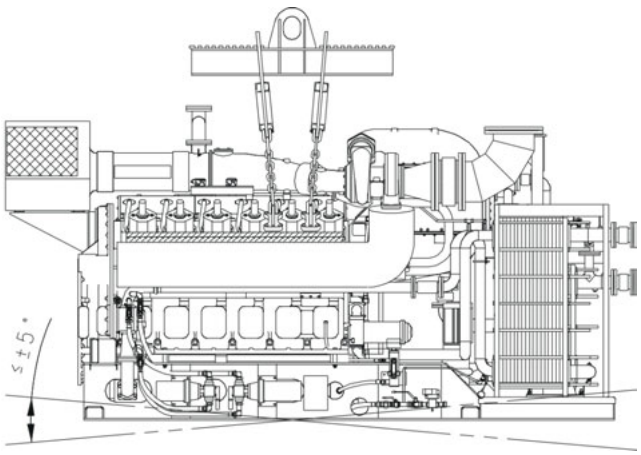

Make sure that the yellow transport safety pegs are correctly installed when lifting an engine, module or generator.

GE Proprietary Information: CONFIDENTIAL! Use or disclosure of data contained on this sheet is subject to the restrictions on the cover or on the first page.

The lifting device can be ordered from GE Jenbacher.

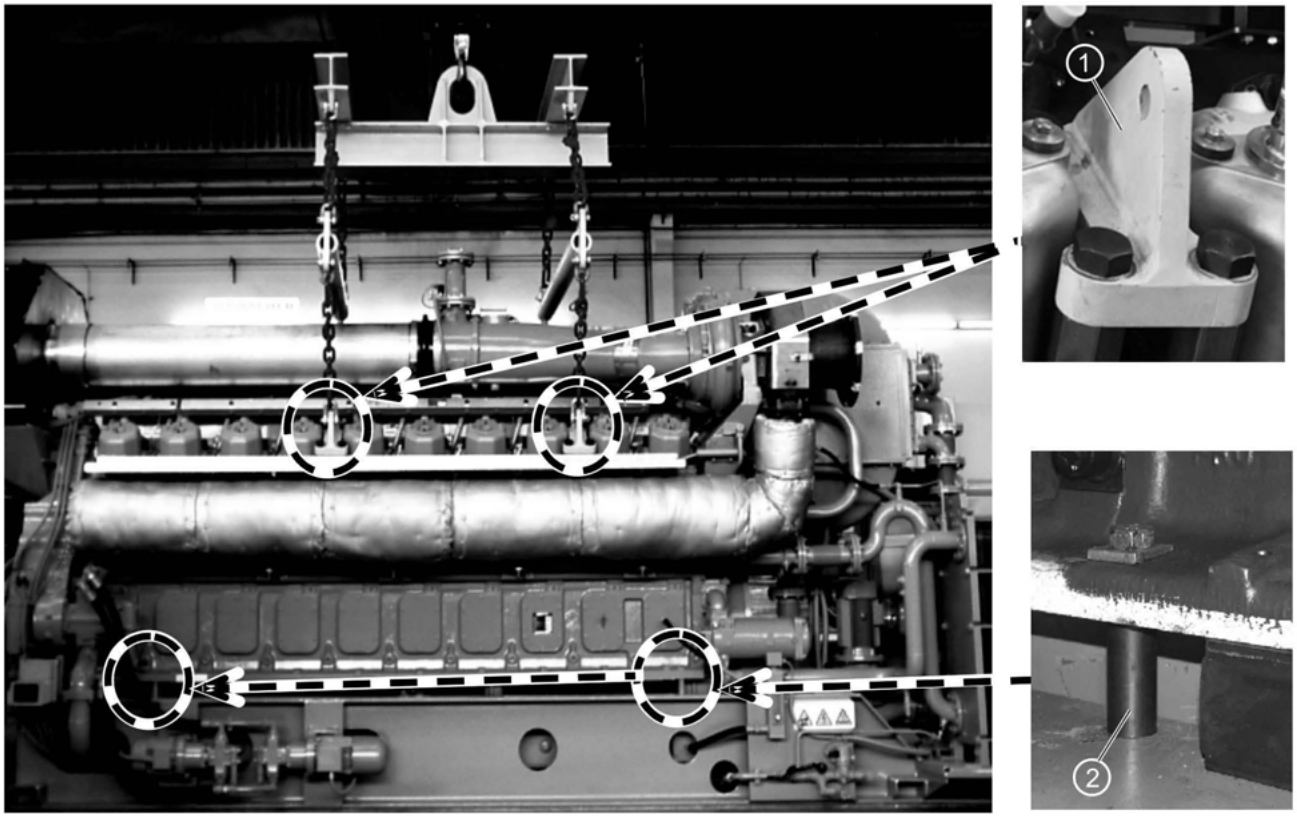

①	Lifting lugs	②	Transport protection

2.3 Lifting the J 624 GS engine - G version

Please read and follow the instructions on the stickers affixed to engine and lifting equipment.

GE Proprietary Information: CONFIDENTIAL! Use or disclosure of data contained on this sheet is subject to the restrictions on the cover or on the first page.

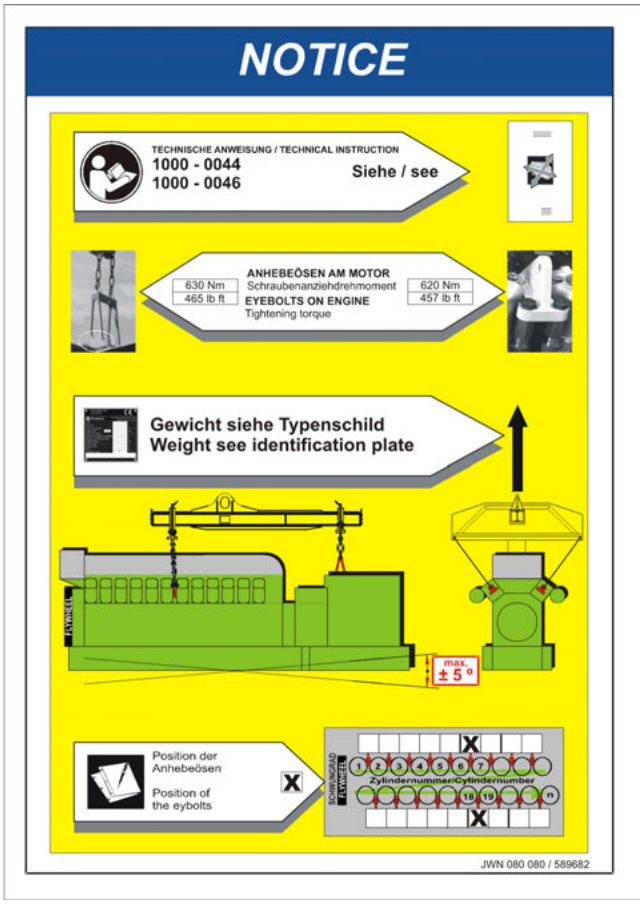

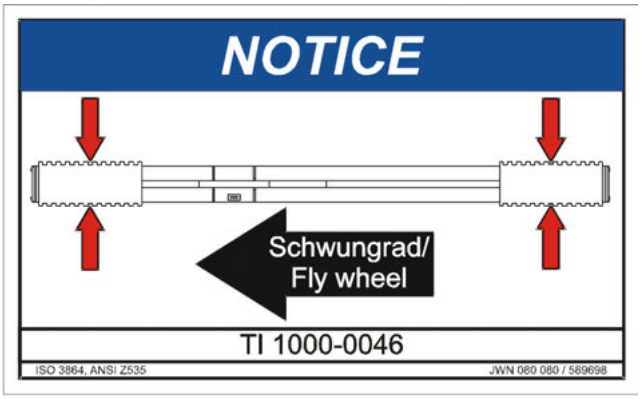

Positioning the lifting eyes:

The lifting eye positions as indicated are standard positions. These can vary according to the engine version. If necessary, reposition the lifting eyes.

Attaching the lifting lug to the mixture cooler unit

GE Proprietary Information: CONFIDENTIAL! Use or disclosure of data contained on this sheet is subject to the restrictions on the cover or on the first page.

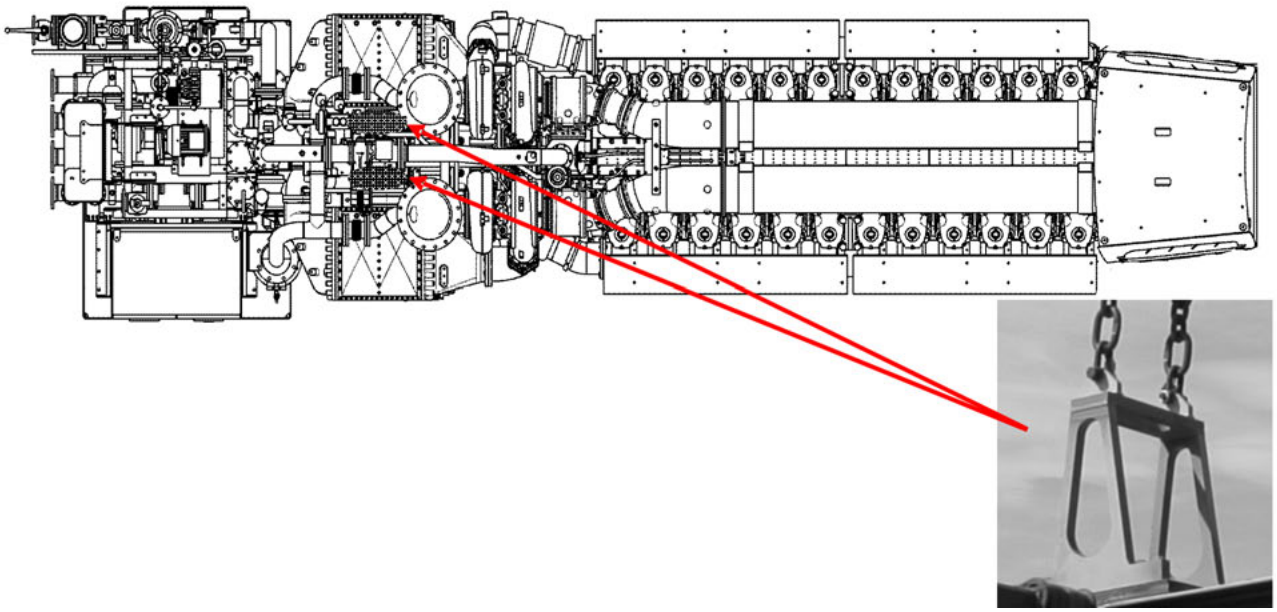

Tighten the screws on the lug using a tightening torque of 630 Nm **[465 lb ft]**.

Attaching the lifting eyes to the cylinder heads:

Position the lifting eyes on the cylinder heads:

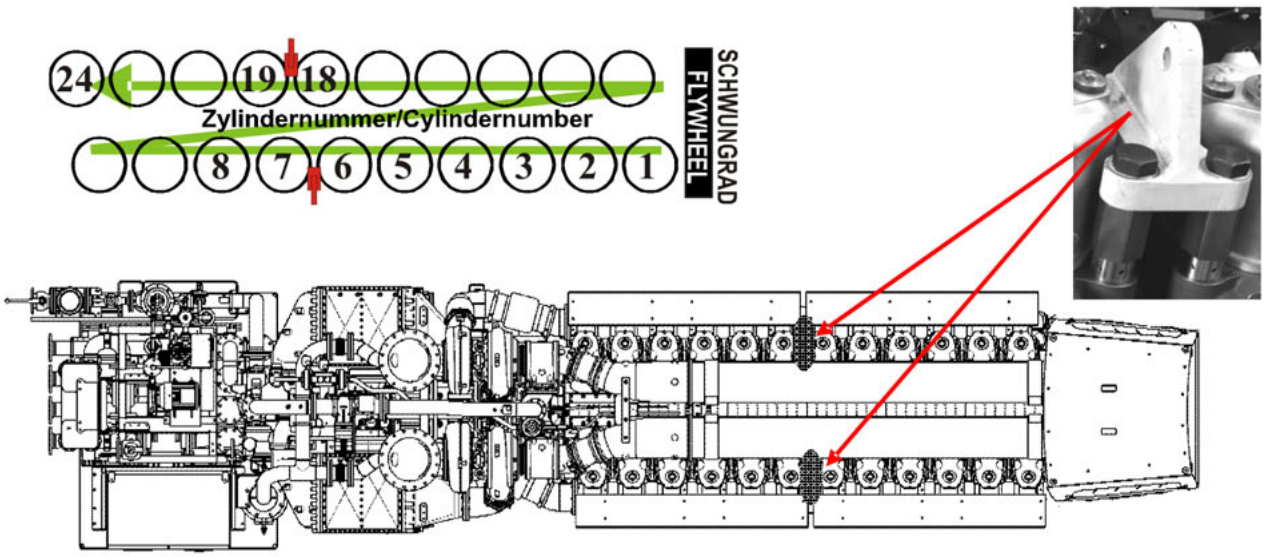

Tighten the screws on the lugs using a tightening torque of 620 Nm **[457 lb ft]**.

GE Proprietary Information: CONFIDENTIAL! Use or disclosure of data contained on this sheet is subject to the restrictions on the cover or on the first page.

Lifting:

When lifting the engine, always ensure that:

that:

- the lifting gear used (crane, etc.) has a lifting capacity of at least **31.500 kg** [69,445 lb].
- its maximum permissible angle of inclination in longitudinal direction does not exceed 5°.
- If the angle exceeds 5°, stop the lifting procedure immediately and redetermine the centre of gravity – if necessary repositioning the sustainers on the lifting gear!

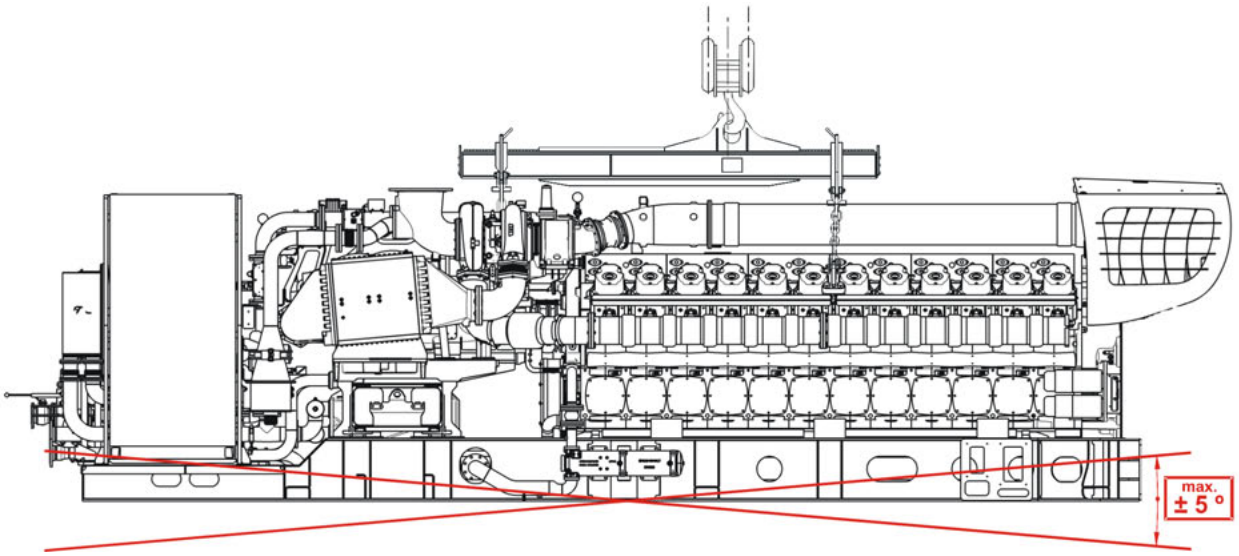

Make sure that the yellow transport safety pegs are correctly installed when lifting an engine, module or generator.

The lifting device can be ordered from variable.

2.4 Lifting the J 624 TSTC engine - H version

Please read and follow the instructions on the stickers affixed to engine and lifting equipment.

Cylinder number 1 is located on the left side of the engine when facing the flywheel.

GE Proprietary Information: CONFIDENTIAL! Use or disclosure of data contained on this sheet is subject to the restrictions on the cover or on the first page.

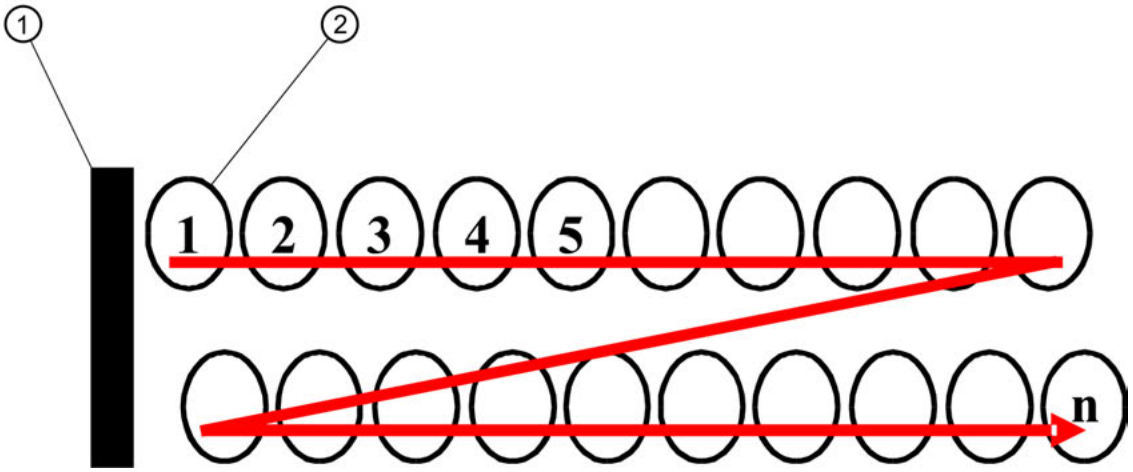

①	Flywheel	②	Cylinder number 1

The positions specified for the lifting lugs are standard positions and should not be changed.

Arranging the lifting lugs on the mixture cooler unit:

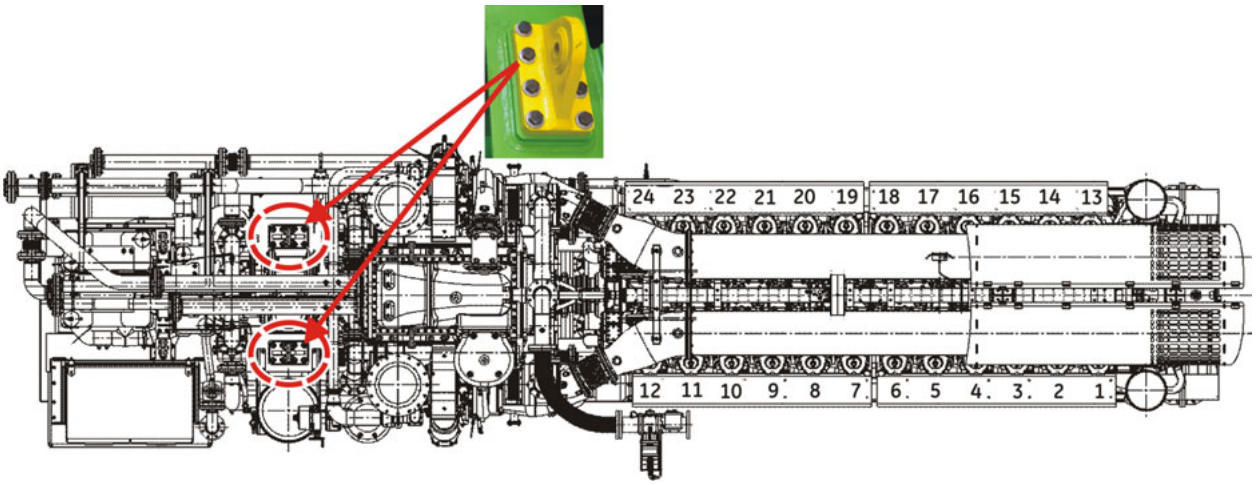

Symbolic picture J624 TSTC - Version H (Position of lifting lugs)

Attaching the lifting lugs to the cylinder heads:

Position the lifting lugs on the cylinder heads:

GE Proprietary Information: CONFIDENTIAL! Use or disclosure of data contained on this sheet is subject to the restrictions on the cover or on the first page.

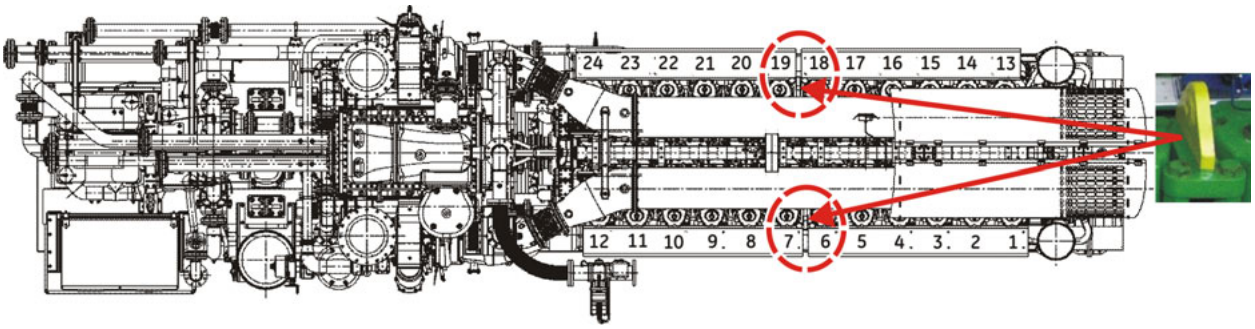

Symbolic picture J624 TSTC - Version H (Position of lifting lugs)

Tighten the screws on the lugs using a tightening torque of 620 Nm **[457 lb ft]**.

Lifting:

Use only an ISATEC lifting device (Part No.: 632826) for lifting in accordance with the operating instructions.

2.5 Generator

Lift the generator using suitable textile hoisting belts, chains or cables.

Make sure that the yellow transport safety pegs are correctly installed when lifting an engine, module or generator.

3 Transport on transport vehicles

3.1 General instructions:

Transport safety pegs must be fitted as described in TI 1000-0044.

This applies to lifting modules, transporting them on transport vehicles and positioning them in engine rooms

When transporting on transport vehicles, make sure that a suitable wood, rubber or similar spacer is used between the module frame and the platform.

Prevent the risk of slipping and tipping by securing the module with retaining straps.

The transport security shackles are not designed to lift modules but only to secure the modules on transport vehicles!

GE Proprietary Information: CONFIDENTIAL! Use or disclosure of data contained on this sheet is subject to the restrictions on the cover or on the first page.

Do not lift the engine by the yellow security shackles!

Lifting the motor by the transport security shackles will result in the shackles breaking off and the engine being seriously damaged.

Caution! Extreme danger!

Lift the module using only the lifting lugs provided!

① Lifting lugs
② Lashing strap shackles

Remove the lashing strap shackles before commissioning.

Fit the knock sensors using the specified tightening torques.

3.2 Rail transport

If possible, railway trucks must not be used for transport purposes as rail transport often involves frequent and hard bumping. Bumping can result in damage to the generator's roller bearings, also referred to as "false brinelling"

GE Proprietary Information: CONFIDENTIAL! Use or disclosure of data contained on this sheet is subject to the restrictions on the cover or on the first page.

in the technical literature. There is also the risk during shunting of railway trucks being pushed away, possibly damaging the engine sliding bearings, and especially the main bearings. Cold welding has been known to be caused by railway wagons being pushed off, resulting in very high axial accelerations.

If, due to local conditions, rail transport cannot be avoided, silomer strips or other damping elements must be placed under the module frame (this does not apply to container versions as these are automatically provided with damping elements). The transport company must also guarantee that the railway wagon carrying the engine/module will NOT be pushed off during shunting.

GE Proprietary Information: CONFIDENTIAL! Use or disclosure of data contained on this sheet is subject to the restrictions on the cover or on the first page.

4 Positioning in the engine room

4.1 Positioning Type 6 E/F and J 624 GS engine and Type 4 module

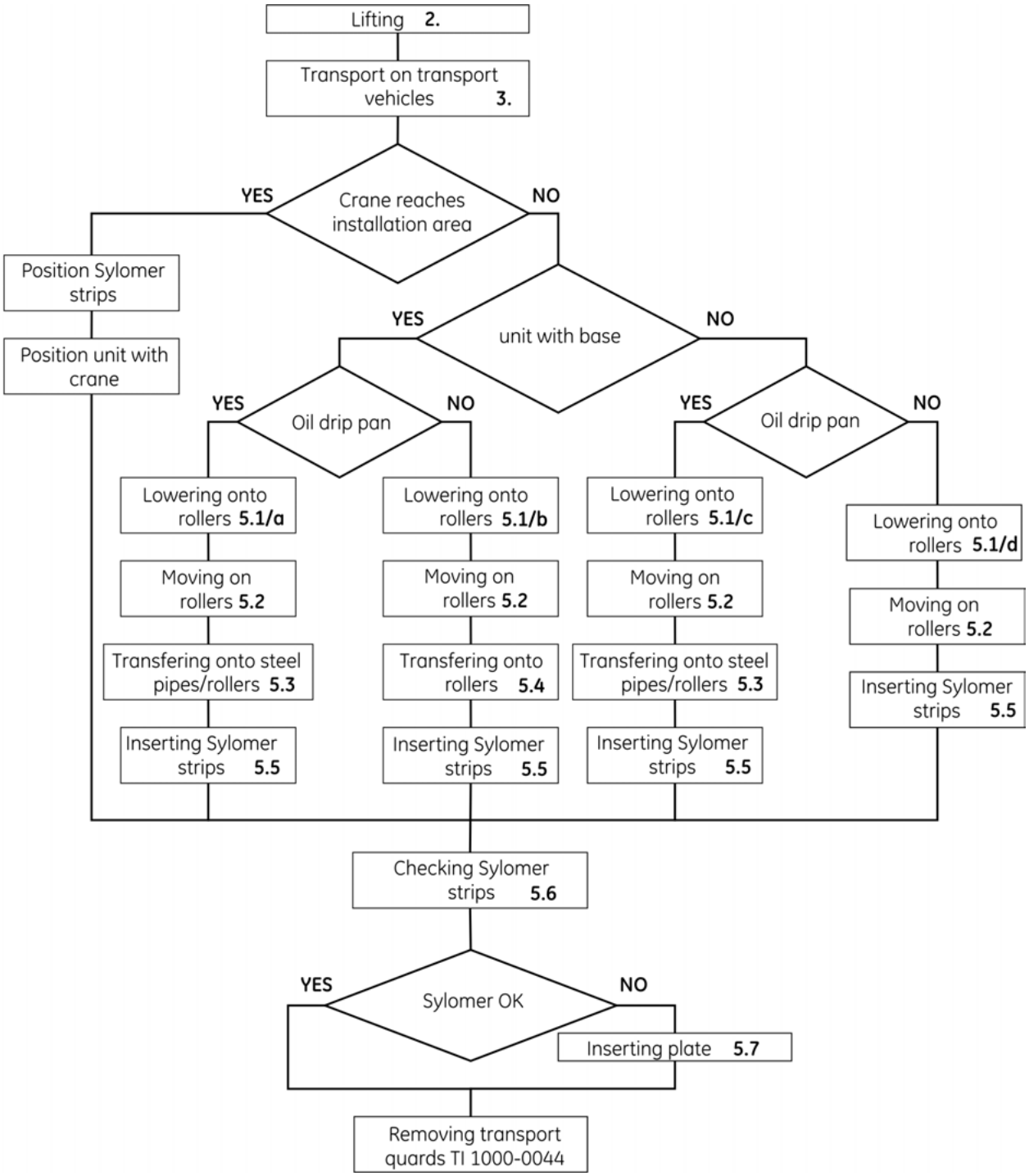

GE Proprietary Information: CONFIDENTIAL! Use or disclosure of data contained on this sheet is subject to the restrictions on the cover or on the first page.

4.2 Positioning a generator

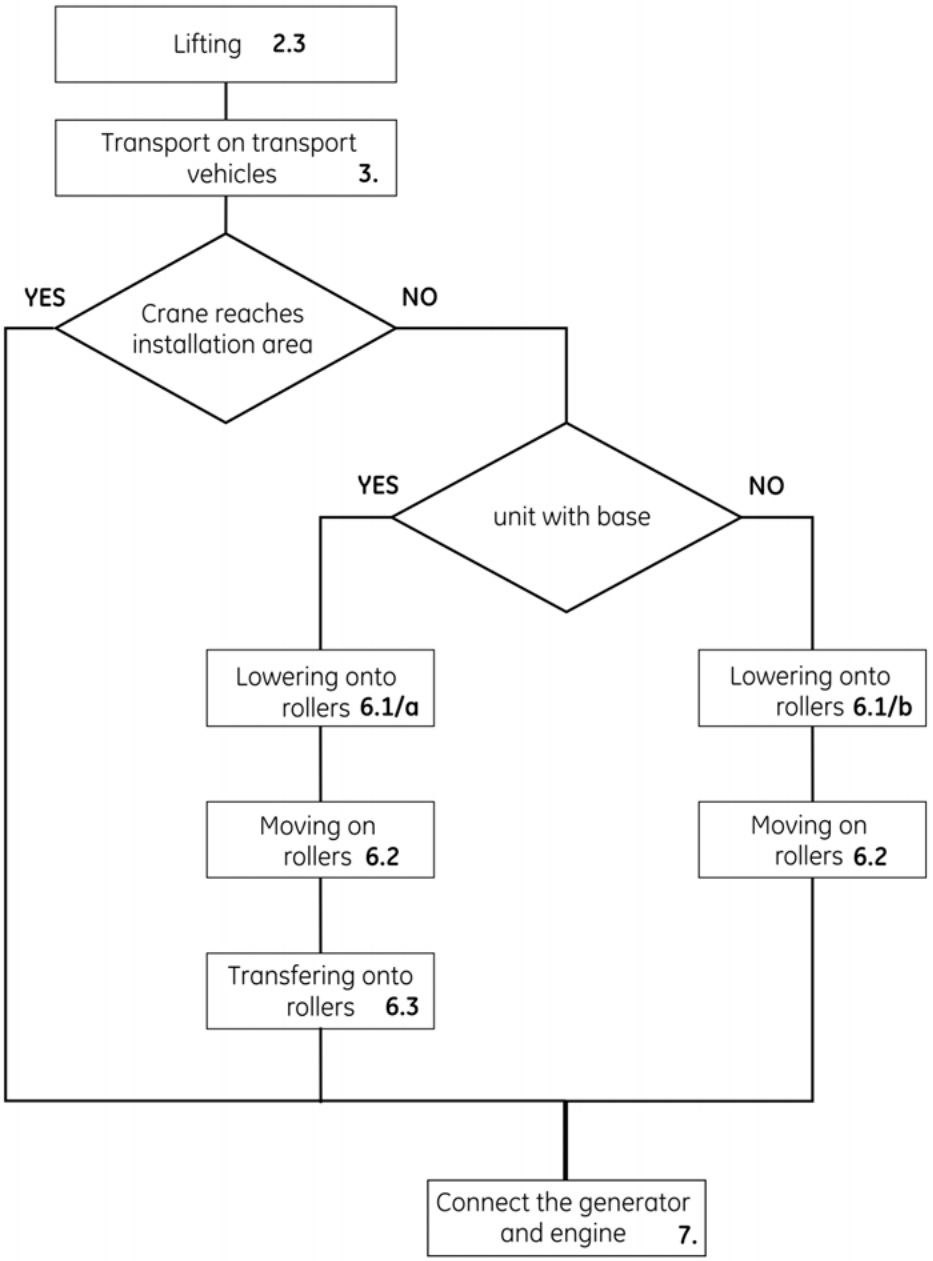

GE Proprietary Information: CONFIDENTIAL! Use or disclosure of data contained on this sheet is subject to the restrictions on the cover or on the first page.

5 Engines and modules cannot be put into place using a crane

5.1 Lowering on to rollers

Position the transport rollers at a distance from the frame I-sections, placing spacer blocks on the transport rollers, if required.

5.1/a	Height of spacer blocks h = min. pedestal height + height of oil collection tray
5.1/b	Height of spacer blocks h = min. pedestal height
5.1/c	Height of spacer blocks h = min. height of oil collection tray
5.1/d	No spacer blocks are required! (The frame can be lowered directly on to the transport rollers.)

Use a crane to lift the module as far as possible into the building.

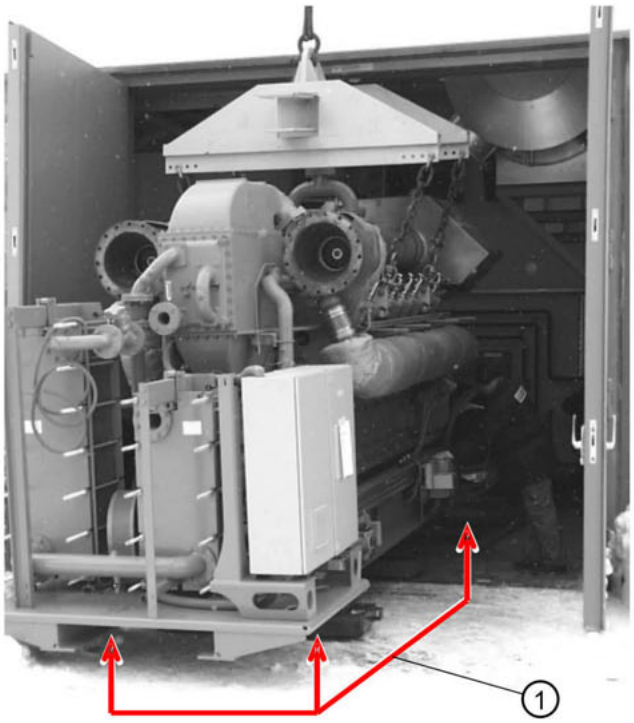

1	Transport roller

Position the longitudinal frame support on transport rollers with wooden spacer blocks on top.

The engine should now be positioned almost horizontally on the transport rollers.

5.2 Moving on rollers

There are various options for moving the module on transport rollers.

GE Proprietary Information: CONFIDENTIAL! Use or disclosure of data contained on this sheet is subject to the restrictions on the cover or on the first page.

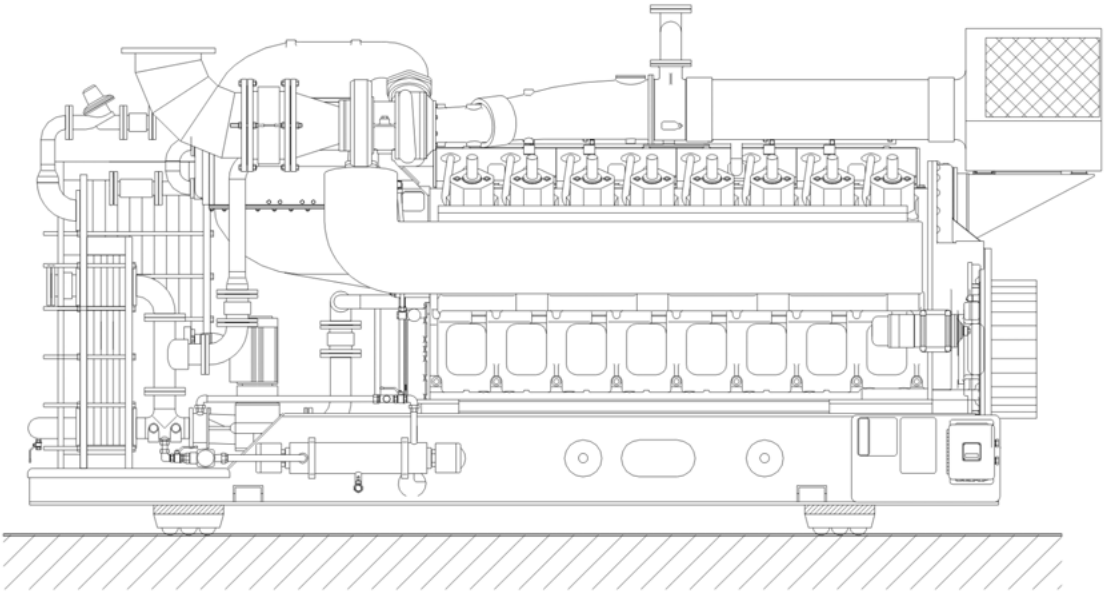

Symbolic picture J616 GS (transport roller positions)

5.2.1 Pulling with a forklift or a cable winch

Attach a chain, bar or cable to the module frame cross-member with a textile loop.

5.2.2 Pushing with a forklift or manpower

If the engine is to be moved using a forklift truck, a protective piece of squared wood should be placed at the engine face between the forklift truck and the engine. The engine can now be moved by positioning the forklift forks against this piece of squared wood.

Experience has shown that three or four strong people are capable of moving a module. This operation requires a level floor. Alternatively, steel plates must be laid to make the floor level.

Bear the following in mind in order to prevent damage.

⚠ Under no circumstances must force be applied to plant components such as module interfaces, ignition box, etc.

5.3 Transferring on to steel rollers/tubes

In this case, steel tubes/rollers must be used which are not wider than the oil collection tray and protrude over the upper edge so that the module frame need only be lifted slightly.

Move the module directly by the oil collection tray.

Install hydraulic jacks at the lifting points.

GE Proprietary Information: CONFIDENTIAL! Use or disclosure of data contained on this sheet is subject to the restrictions on the cover or on the first page.

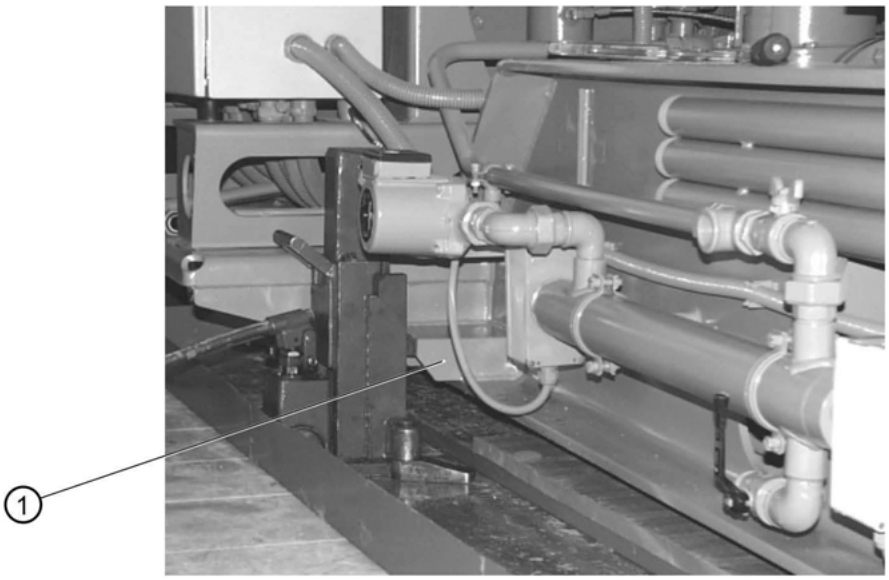

①	Lifting point

As the amount of space available is limited, especially if the engine is equipped with an engine oil pan, bear in mind the following advice relating to the dimensions of the hydraulic jacks.

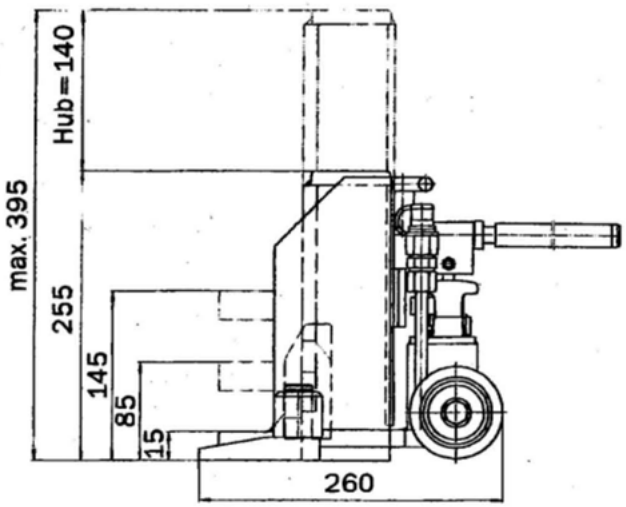

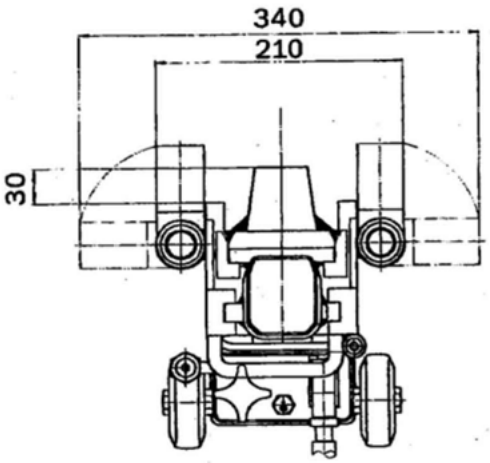

Roll suitable steel tubes/rollers in the oil collection tray under the frame and remove the front pair of transport rollers.

Lower the module on to the steel tubes/rollers.

GE Proprietary Information: CONFIDENTIAL! Use or disclosure of data contained on this sheet is subject to the restrictions on the cover or on the first page.

①	steel tube

Transfer the second pair of transport rollers in the same way.

5.4 Transferring onto rollers

Move the engine directly by its pedestal.

Install hydraulic jacks at the lifting points. Remove the wooden spacer blocks, lift the transport rollers on to the pedestal and place the module frame on to them.

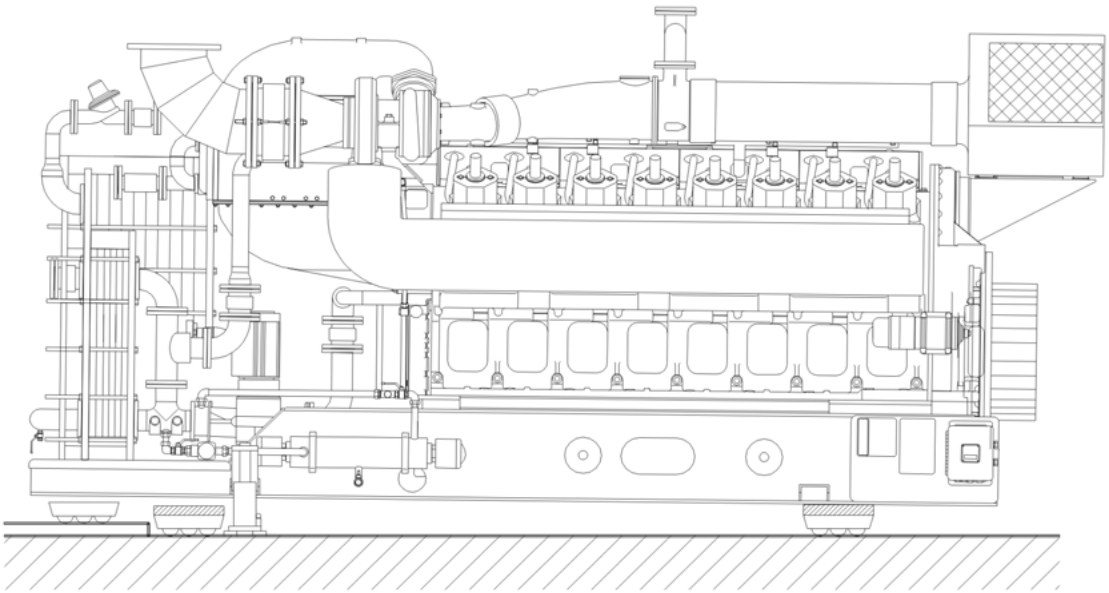

Symbolic picture J616 GS (transferring the transport rollers)

GE Proprietary Information: CONFIDENTIAL! Use or disclosure of data contained on this sheet is subject to the restrictions on the cover or on the first page.

Transfer the second pair of transport rollers in the same way.

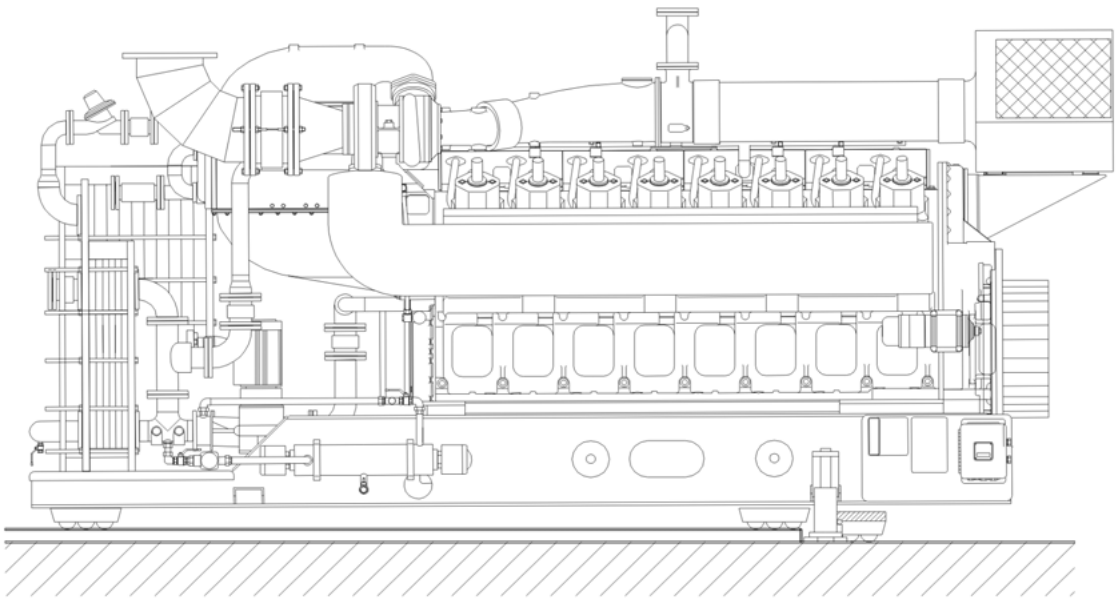

Symbolic picture J616 GS (transferring the second transport roller set)

5.5 Place sylomer strips underneath the generator.

Procedure for the J 624 GS engine - G version:

Place a piece of squared wood under one end of the frame. At the other end, use hydraulic jacks to lift the module frame.

For reasons of safety, place the module frame on squared wood to prevent it from sagging.

Remove the transport rollers and lay the sylomer strips up to the squared wood.

If four (4) hydraulic jacks are available, the module can be lifted at both ends to lay and align the sylomer strips in a single operation.

GE Proprietary Information: CONFIDENTIAL! Use or disclosure of data contained on this sheet is subject to the restrictions on the cover or on the first page.

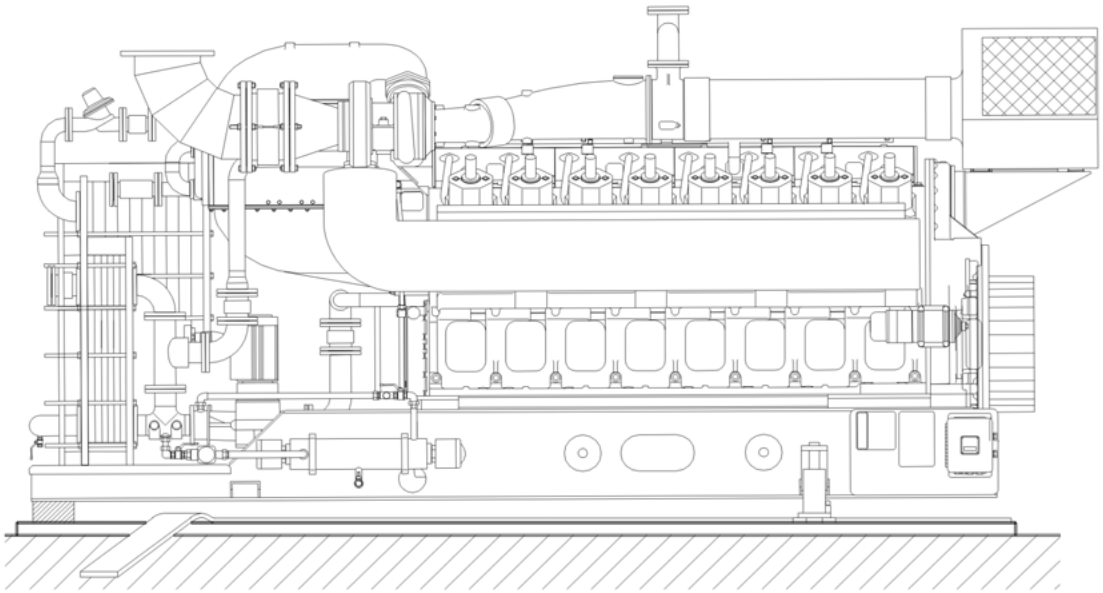

Symbolic picture J616 GS (inserting sylomer strips and aligning these)

Lift the module frame at the other end and remove the squared wood.

Lay sylomer strips over the entire length and arrange so that these protrude evenly all round under the frame side members.

Trim the sylomer strips flush with the frame side members.

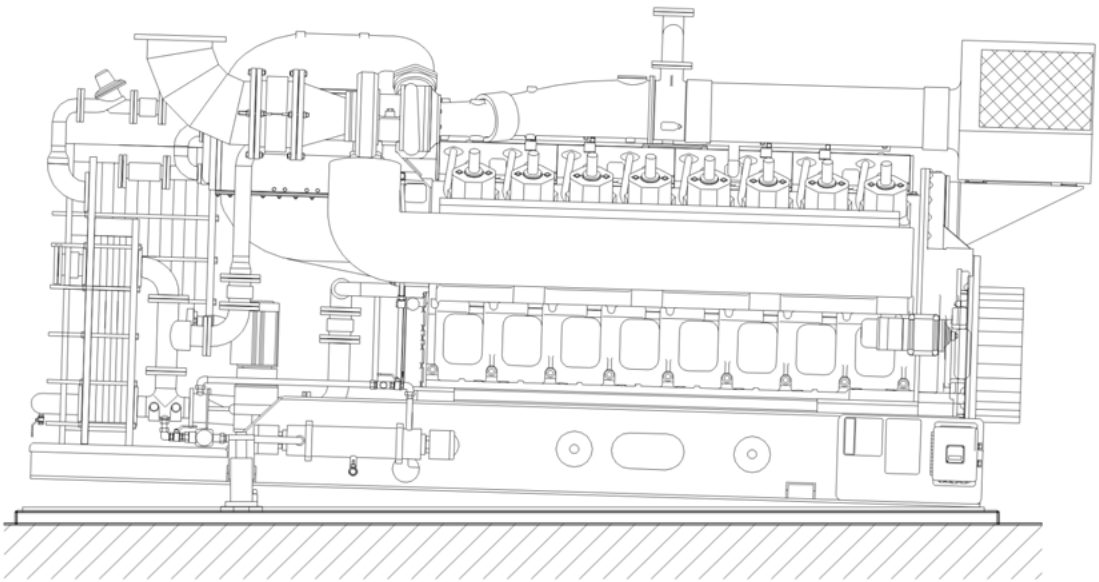

Symbolic picture J616 GS (laying sylomer strips and aligning these)

GE Proprietary Information: CONFIDENTIAL! Use or disclosure of data contained on this sheet is subject to the restrictions on the cover or on the first page.

Procedure for the J 624 TSTC engine - H version:

Lift the module using eight (8) hydraulic jacks to lay and align the sylomer strips in a single operation.

Lay sylomer strips over the entire length and arrange so that these protrude evenly all round under the frame side members.

Lower the module frame evenly and remove the hydraulic jacks.

Trim the sylomer strips flush with the frame side members.

5.6 Checking the sylomer strips

The module frame must be evenly spread over the entire length of the sylomer strips.

It must not be possible to move the sylomer strips at any point under the frame side member.

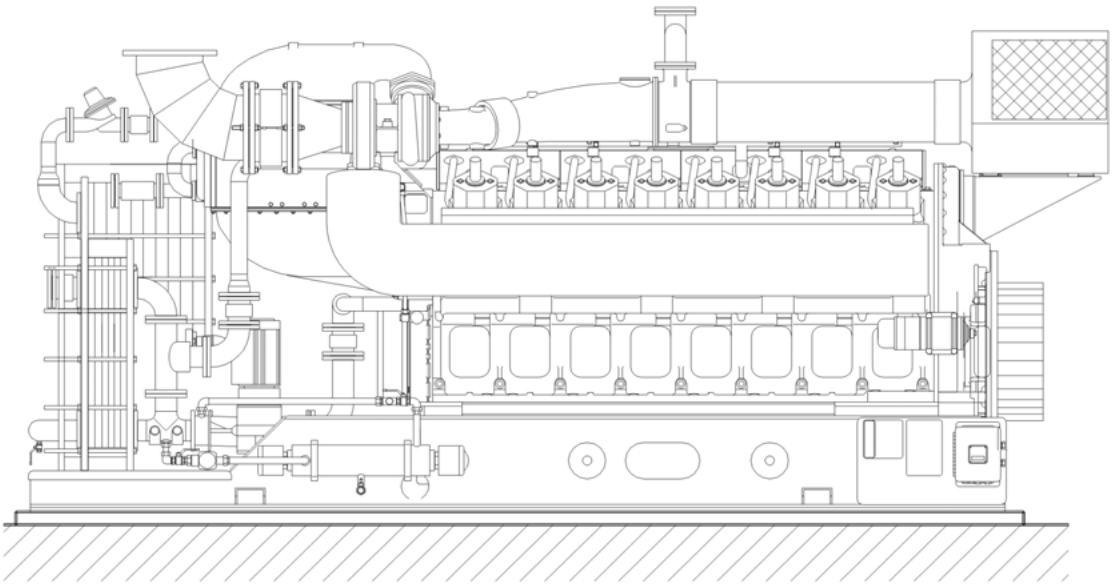

Symbolic picture J616 GS (checking the sylomer strips)

5.7 Inserting shims

If the sylomer strips are unevenly loaded, shim plates must be inserted (under the sylomer strips) at any points where the sylomer strips can be moved.

The thickness of the inserted plate must correspond to the deviation (between module installation surface and sylomer strips) plus ~ 2 mm [0.079 in].

GE Proprietary Information: CONFIDENTIAL! Use or disclosure of data contained on this sheet is subject to the restrictions on the cover or on the first page.

6 The generator cannot be put into place using a crane

6.1 Lowering on to rollers

Position the transport rollers at a distance from the frame I-sections, placing spacer blocks on the transport rollers, if required.

6.1/**a** Height of spacer blocks h = min. pedestal height

6.1/**d** No spacer blocks are required! (The frame can be lowered directly on to the transport rollers.)

Position the generator on transport rollers using a crane or forklift truck.

The generator should now be positioned almost horizontally on the transport rollers.

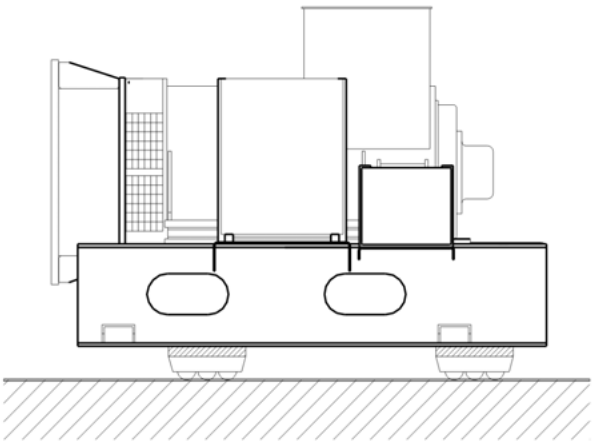

6.2 Moving on rollers

There are various options for moving the generator on transport rollers.

6.2.1 Pulling with a forklift or a cable winch

Attach a chain, bar or cable to the generator frame cross-member with a textile loop.

6.2.2 Pushing with a forklift or manpower

If the generator is to be moved using a forklift truck, a protective piece of squared wood should be placed at the face between the forklift truck and the frame. The generator can now be moved by positioning the forklift forks against this piece of squared wood.

Experience has shown that two strong people are capable of moving a generator with no difficulty. This operation requires a level floor. Alternatively, steel plates must be laid to make the floor level.

GE Proprietary Information: CONFIDENTIAL! Use or disclosure of data contained on this sheet is subject to the restrictions on the cover or on the first page.

6.3 Transferring onto rollers

Move the generator directly by its pedestal.

Install hydraulic jacks at the lifting points. Remove the wooden spacer blocks, lift the transport rollers on to the pedestal and place the generator frame on them.

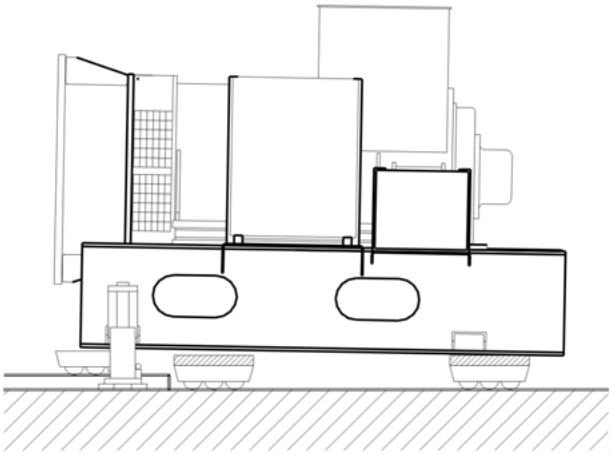

Transfer the second pair of transport rollers in the same way.

7 Coupling the generator and engine to each other

7.1 With non-elastic coupling housing

Lift (using a crane) or roll the generator towards the module which was already aligned on the sylomer strips. Stop the movement when the measuring gauge touches the cross-frame support on the flywheel side.

GE Proprietary Information: CONFIDENTIAL! Use or disclosure of data contained on this sheet is subject to the restrictions on the cover or on the first page.

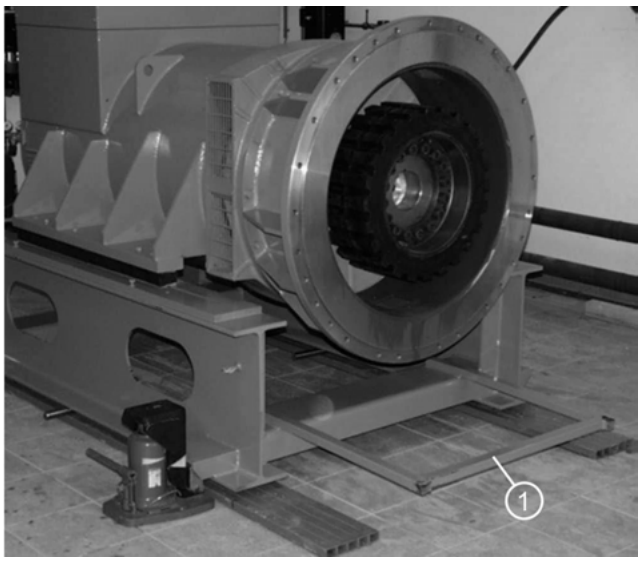

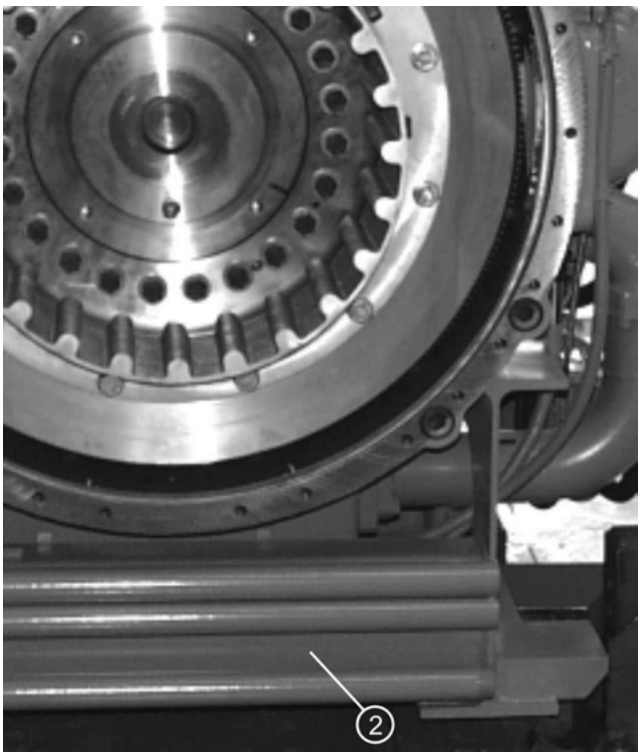

① Measuring gauge

② Cross-frame support at flywheel end

Lift generator using hydraulic lifting equipment. Place sylomer strips underneath the generator. Place sylomer strips on the engine side underneath the generator (both lengthwise and crosswise).

The generator frame must be evenly spread over the entire length of the sylomer strips.

It must not be possible to move the sylomer strips at any point under the frame side member.

⚠ If an engine oil pan is fitted, the difference in frame height between module and generator must be adequately compensated for (e.g. all-welded shaped tube frame.)

GE Proprietary Information: CONFIDENTIAL! Use or disclosure of data contained on this sheet is subject to the restrictions on the cover or on the first page.

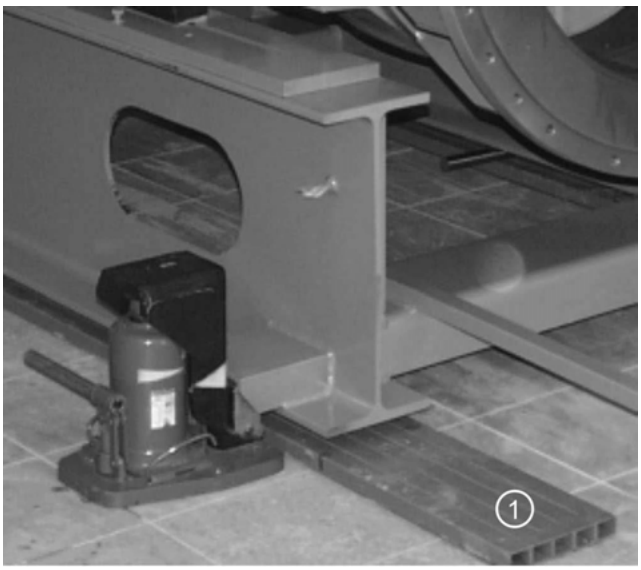

① All-welded tube frames ("Form tube package") ② Removing the yellow transport safety pegs

The construction of the generator frame guarantees that the module frame rises above the generator frame (by approx. 5 mm). This difference is equalised by inserting distance plates.

To insert these plates, the generator should be lifted hydraulically or mechanically using four (4) jacking bolts (inserted into the fine screw-thread inserts on the generator pedestal).

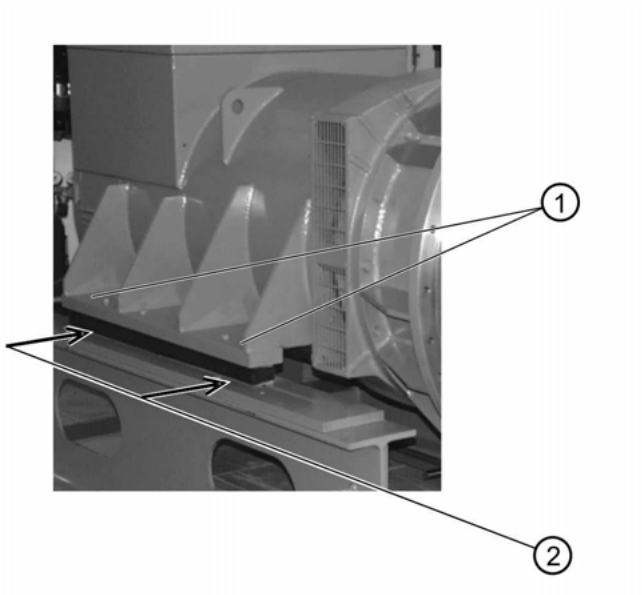

①	Fine screw-thread inserts at the generator frame.	②	Install distance plates

Insert two threaded rods (M16 x 370) opposite to the flywheel casing and pull the generator at right angles and smoothly towards the engine by tightening the hexagonal nuts.

GE Proprietary Information: CONFIDENTIAL! Use or disclosure of data contained on this sheet is subject to the restrictions on the cover or on the first page.

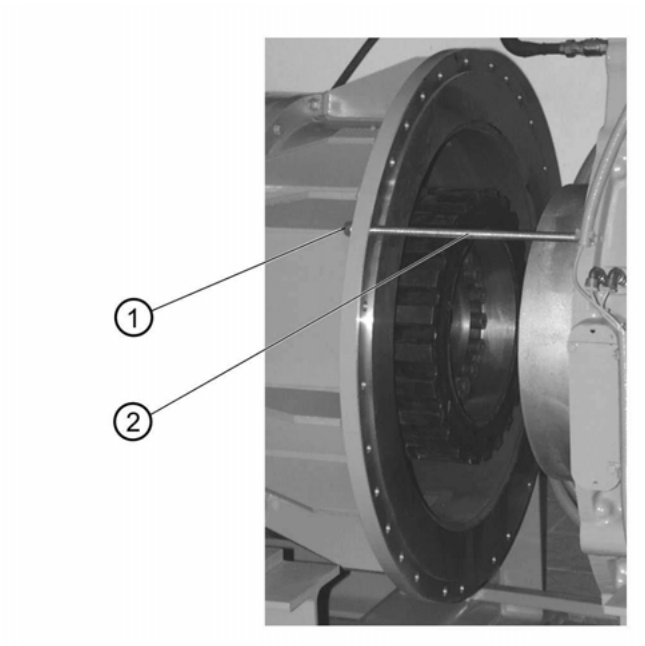

①	Hexagonal nut	②	Threaded rod (M16 x 370)

You should now be able to slide the coupling element (rubber band) into the coupling flange without exerting too much force.

The flange facing of the flywheel casing and coupling housing must be in perfect parallel alignment. Any deviations should be equalised by inserting distance plates between the generator frame and the elastic generator bearing.

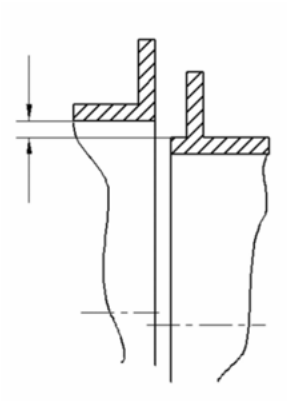

Radial: max. 2mm

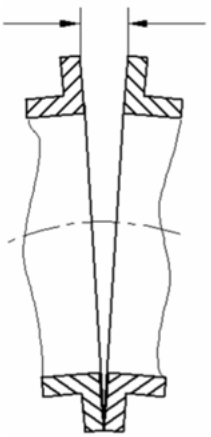

Axial: max. 3mm

GE Proprietary Information: CONFIDENTIAL! Use or disclosure of data contained on this sheet is subject to the restrictions on the cover or on the first page.

Use hexagonal bolts (M16 x ..*) with hardened-steel washers to connect the engine and generator.

*) The length of the bolt differs from one generator type to another.
Tighten the hexagonal bolts using a tightening torque of 190 Nm and then secure them using Loctite 242.

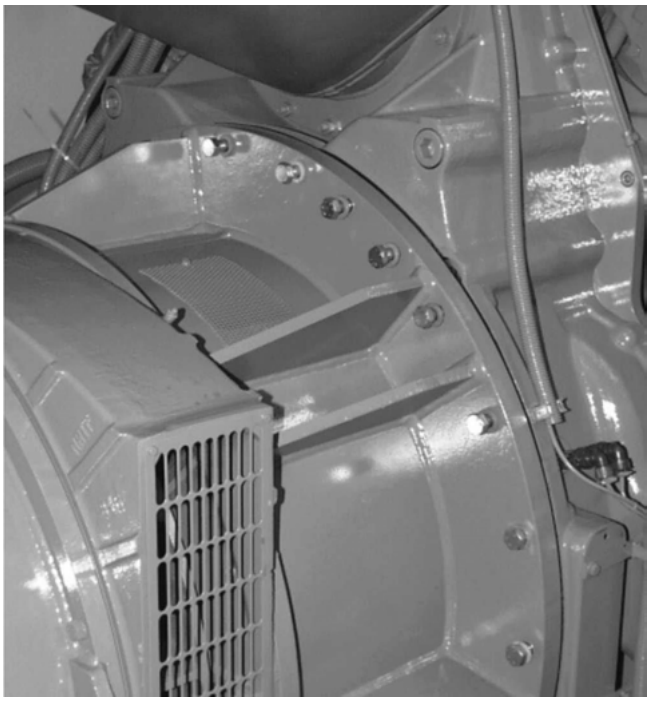

7.2 Using elastic coupling housing (type 6 engine)

Use the elastic coupling housing to connect the generator to the engine, see IW 8060 A6.

GE Proprietary Information: CONFIDENTIAL! Use or disclosure of data contained on this sheet is subject to the restrictions on the cover or on the first page.

7.3 Measure the radial play of the elastic coupling housing (type 4 engine).

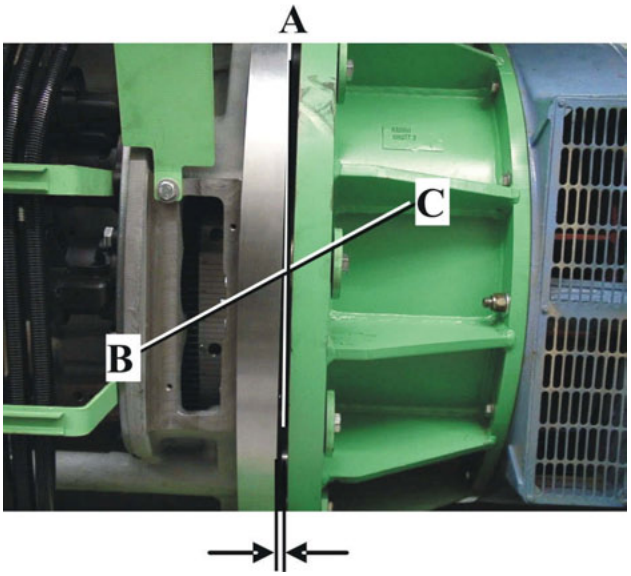

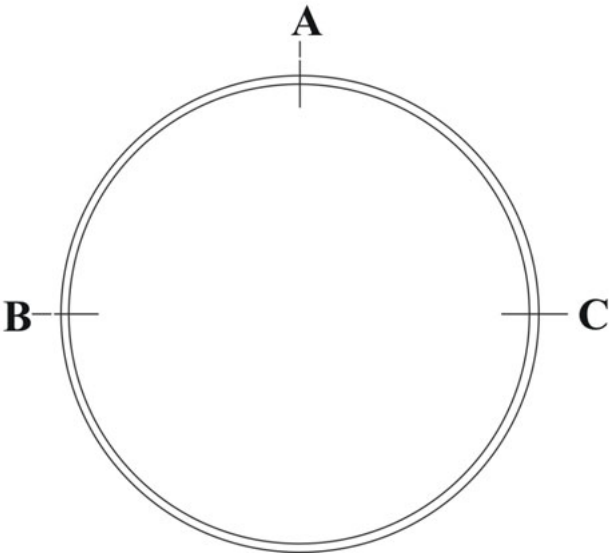

Measure the gap in 3 places on the circumference.
Guide value: ~14mm

A = 12 hrs; B = 9 hrs; C = 3 hrs - position

Operational data on elastic coupling housing (E 8079 4)

	Enter measured data in the table Operational data **elastic coupling housing (E 8079 4)**.

The measured values must be within a +/- 1 mm tolerance of the value measured during commissioning (see Operational data E 8079 4), otherwise the radial alignment of the generator must be corrected as described below.

Use shim plates to correct the generator height and subsequently recheck the axial offset of the coupling housing on elastic bearings.

Height correction

GE Proprietary Information: CONFIDENTIAL! Use or disclosure of data contained on this sheet is subject to the restrictions on the cover or on the first page.

①	Shim plate		

8 Erection of sets with gearboxes

8.1 Transporting generator frame with generator and gearbox

⚠ Lugs on the generator and transmission should not under any circumstances be used to hoist the complete module. These lugs should only be used to move the generator frame containing the generator and transmission.

Attach the lifting lugs to the generator

Attach the lifting lugs to the transmission

8.2 Set-up

When handling **multiple engines with gearboxes**, make sure that the generator and engine frames are correctly assigned.

GE Proprietary Information: CONFIDENTIAL! Use or disclosure of data contained on this sheet is subject to the restrictions on the cover or on the first page.

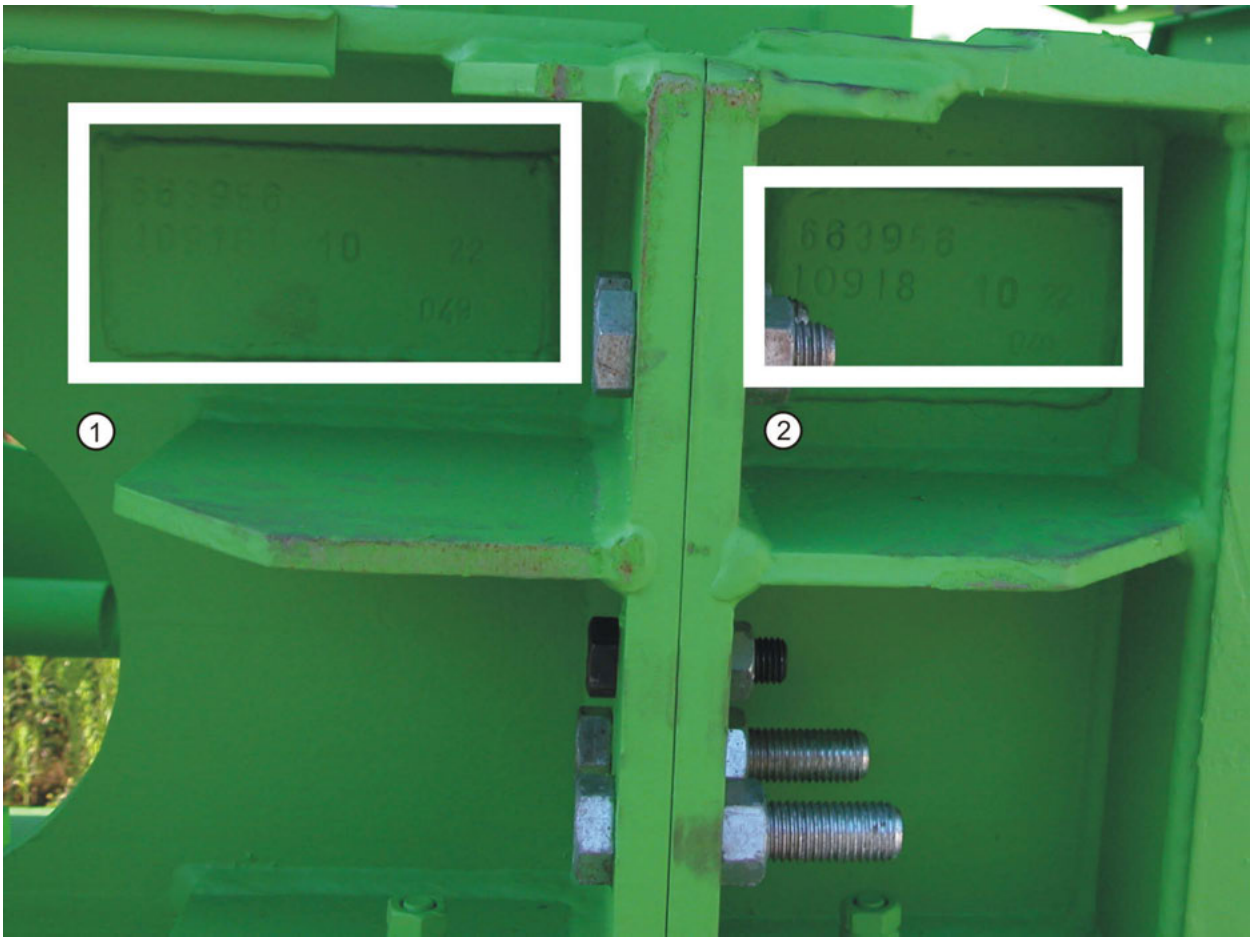

①	Markings on generator frame	②	Markings on engine frame

When fitting gearbox couplings, please refer to IW 8071 A0!

GE Proprietary Information: CONFIDENTIAL! Use or disclosure of data contained on this sheet is subject to the restrictions on the cover or on the first page.

1 General 1
2 Disconnect the set completely and remove the battery 1
2.1 Removal 1
2.2 Installation 5
3 Commissioning the new batteries 7
3.1 Tips 7
3.2 Filling procedure 7
4 Maintenance instructions 8
4.1 Visual inspection 8
4.2 Acid condition/density 8
4.3 Storage 9
5 TRIO-PS/3AC/24DC/40 charger (optional) 9
5.1 Components 9
5.2 Signals 10

Please observe the safety and hazard information in the safety instructions (TI 2300-0005) and wear the appropriate personal protective equipment.

Check the touch guards for the starter installation
Touch guards to IP2X or IPXXB (protection against fingers) are fitted to starter motor battery poles, the battery cable, battery busbars and starter motor terminals.

1 General

The batteries used by GE Jenbacher are fully charged and ready for use 20 minutes after the battery has been filled with dilute sulphuric acid (density 1.28) without having to be charged first.

2 Disconnect the set completely and remove the battery

Switch off the engine in accordance with Technical Instruction No. 1100-0105 and ensure that unauthorised persons cannot start the engine.

This work may only be carried out by specialist staff having the relevant electrical training.

2.1 Removal

Before starting to remove the starter battery, a few safety precautions must be taken.

GE Proprietary Information: CONFIDENTIAL! Use or disclosure of data contained on this sheet is subject to the restrictions on the cover or on the first page.

Switch the main fuses for the buffer and starter batteries to OFF.

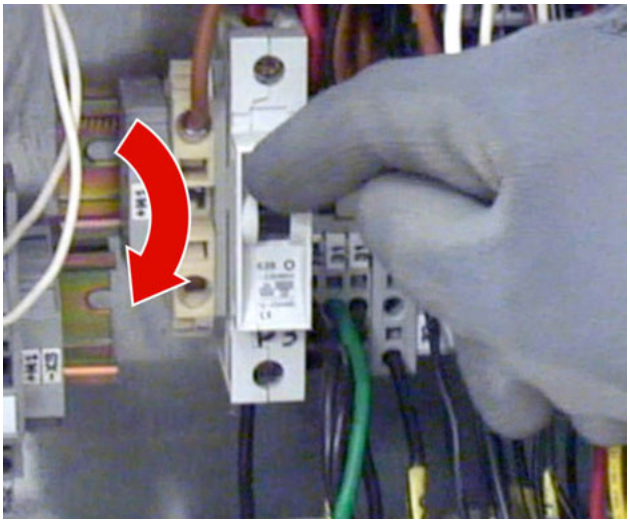

Secure the main fuses against being switched back on.

Check that all components are dead

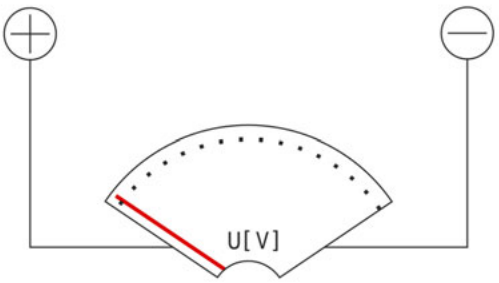

GE Proprietary Information: CONFIDENTIAL! Use or disclosure of data contained on this sheet is subject to the restrictions on the cover or on the first page.

If fitted: Remove the step plate

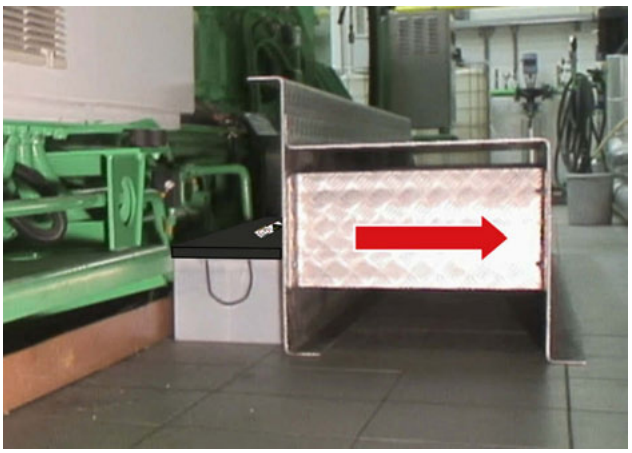

Remove cover

Version **without** starter terminal box
Disconnect the negative terminal of the batteries from the module frame, insulate the detached terminal cable and place it on the floor

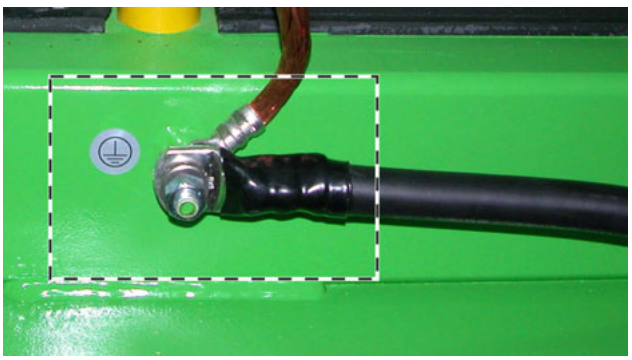

GE Proprietary Information: CONFIDENTIAL! Use or disclosure of data contained on this sheet is subject to the restrictions on the cover or on the first page.

Version **with** starter terminal box

Disconnect the negative contact in the starter terminal box

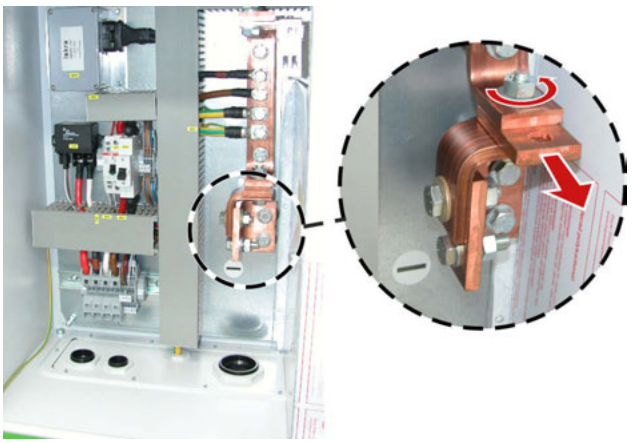

GE Proprietary Information: CONFIDENTIAL! Use or disclosure of data contained on this sheet is subject to the restrictions on the cover or on the first page.

Remove the connector between the batteries using an isolated open-ended wrench

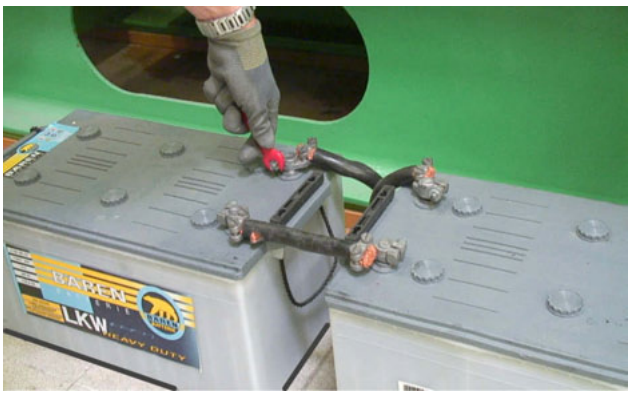

Observe local regulations when disposing of batteries.

2.2 Installation

Refit the connector between the batteries using an isolated open-ended wrench

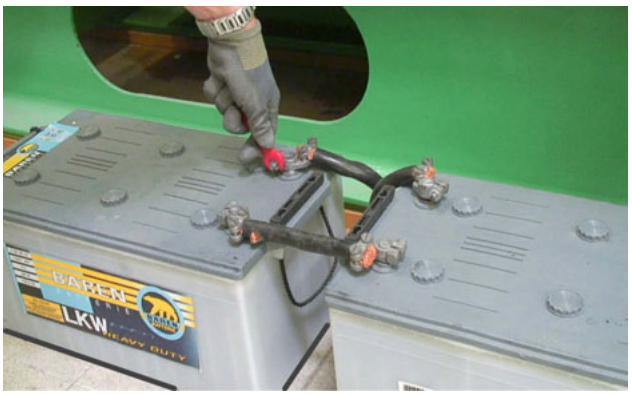

Version **without**battery terminal box
Connect the negative terminal of the batteries to the module frame.

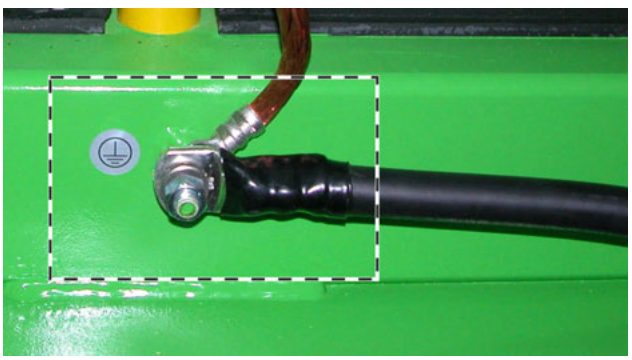

GE Proprietary Information: CONFIDENTIAL! Use or disclosure of data contained on this sheet is subject to the restrictions on the cover or on the first page.

Version **with** starter terminal box

Connect the negative contact in the starter terminal box

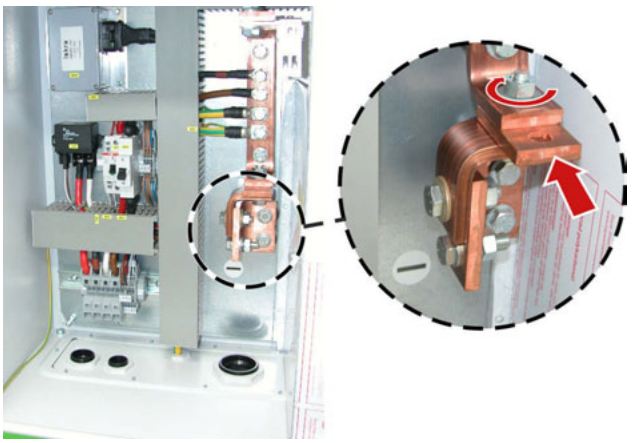

Refit the cover

GE Proprietary Information: CONFIDENTIAL! Use or disclosure of data contained on this sheet is subject to the restrictions on the cover or on the first page.

Check that all the work in the hazardous areas has been completed and that there is no danger to people or machinery.

Remove the LOTO locks.

Switch the main fuses for the buffer and starter batteries to ON.

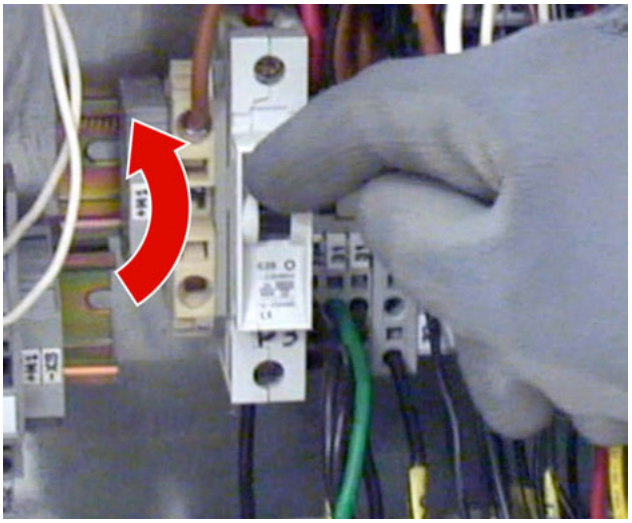

3 Commissioning the new batteries

3.1 Tips

When filling, both the battery and the acid must have a minimum temperature of +10°C.

Fill the battery with acid just before it is installed (initial commissioning).

3.2 Filling procedure

Unscrew and remove the screw plugs. Remove any sealing strips or discs and discard.

Fill the battery cells with dilute sulphuric acid (density 1.28) up to the acid level mark.

Leave the battery to rest for approx. 15 minutes, then shake carefully and, if required, top up the acid level. Repeat this procedure after leaving the battery to charge for a couple of hours.

Screw on the battery caps tightly.

The battery is now ready to be used and installed in the module.

GE Proprietary Information: CONFIDENTIAL! Use or disclosure of data contained on this sheet is subject to the restrictions on the cover or on the first page.

4 Maintenance instructions

When working on batteries, make sure that washing facilities are present in the immediate vicinity.

Please observe the safety and hazard information in the safety instructions (TI 2300-0005) and wear the appropriate personal protective equipment.

Always keep the battery dry and clean. Protect the battery poles by applying battery pole grease or pure Vaseline.

A carefully maintained and fully charged battery is your best guarantee for trouble-free starting.

An increase in the battery water consumption is a sure sign of overcharging, which severely reduces battery service life. Check the battery charge condition and, in the event of malfunction, inform GE Jenbacher immediately.

An increased ambient temperature (depending on the country where the module is used) can also affect battery water consumption. If this is the case, the inspection interval must be reduced accordingly as described in the maintenance plan!

4.1 Visual inspection

Check the battery housing for damage. Check the battery poles for defects caused by short circuits or mechanical damage. If necessary, replace the battery.

The battery cover must always be fitted.

Do not step on the cover.

The cover over the battery connections must always be fitted.

4.2 Acid condition/density

The acid level must reach the battery acid-level mark.

If the acid level falls below the stated values, top up with the appropriate quantity of **distilled water**(never use tap water or acid) and charge the battery for 15 minutes. Once the battery has finished charging, check the acid level again.

The acid density level is indicative of the charge condition of the battery. The acid density level is measured using an acid tester. When testing, make sure to sample acid from each battery cell.

The acid density level value must not fall below 1.26 kg/l or exceed 1.28 kg/l.

If one of the battery cells shows an abnormally low acid density level, it may be assumed that the battery plates are short circuiting.

GE Proprietary Information: CONFIDENTIAL! Use or disclosure of data contained on this sheet is subject to the restrictions on the cover or on the first page.

Change the battery immediately – explosion hazard!

4.3 Storage

Storing unfilled batteries

Unfilled batteries do not require maintenance.

The storage room must be dry.

Storing filled batteries

Charge uninstalled batteries every 4 weeks.

5 TRIO-PS/3AC/24DC/40 charger (optional)

The charger is set to the required operation in the factory and does not require further operation.

5.1 Components

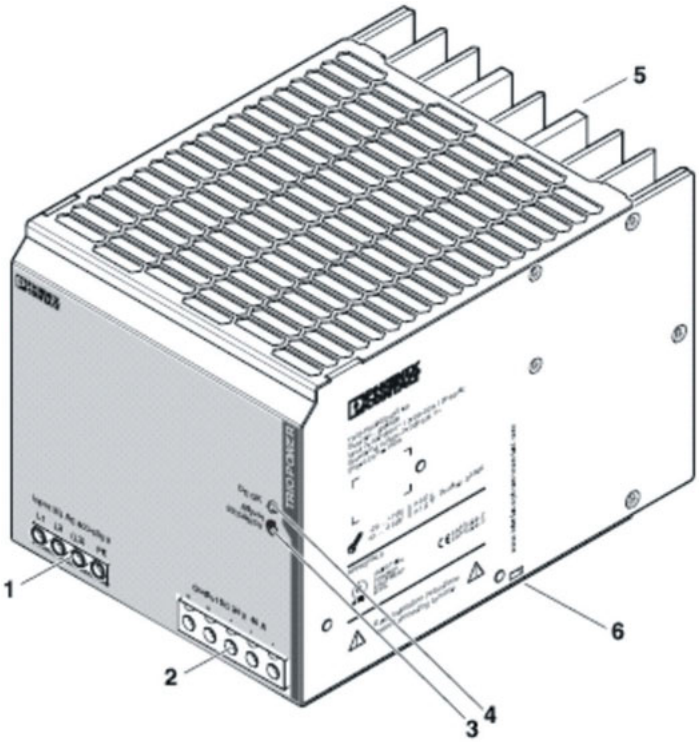

TRIO charger

①	AC input	④	LED "DC OK"
②	DC output	⑤	Assembly rails adapter
③	Potentiometer 22.5 V DC ... 29,5 V DC	⑥	Opening for cable ties

GE Proprietary Information: CONFIDENTIAL! Use or disclosure of data contained on this sheet is subject to the restrictions on the cover or on the first page.

5.2 Signals

	Condition 1	Condition 2
LED "DC OK"	lights up	out, off
Cause	Output voltage > 21.5 V	Output voltage < 21.5 V or no output voltage
Meaning	Output voltage and output current are "OK".	TRIO POWER is operational but there is a consumer malfunction. The current consumption exceeds IN or the output is short circuited. TRIO POWER is not operational because there is no mains supply voltage, the primary-sided fuse has been activated or the charger is defective.

GE Proprietary Information: CONFIDENTIAL! Use or disclosure of data contained on this sheet is subject to the restrictions on the cover or on the first page.

Technical Instruction: TA 1000-0048
Special Container (3m) – Classification and handling (Container with top container corner fittings at both container ends)

1 **Scope** 1
2 **Classification** 1
3 **Handling** 2
3.1 Lifting 2
4 **Assembly points for lifting equipment inside the container** 2
5 **Safety sticker** 3

1 Scope

The present Technical Instruction applies to all GE Jenbacher container modules with dimensions 12,192 x 2,700 x 3,000 mm with upper corner fittings at both container ends and lower corner fittings.

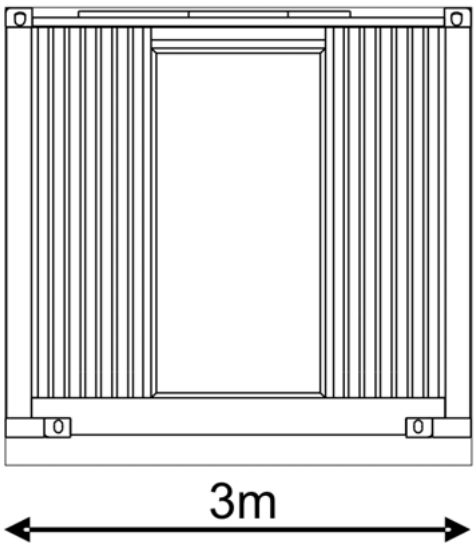

2 Classification

The external dimensions, corner fittings and stability of GE Jenbacher containers comply with the following specifications and international guidelines.

Aspect	Description	Guideline	Guideline name
Container type	**Special container** With lower corner fittings in line with Type 1 ISO containers (12192 x 2438)	According to ISO 668	Type 1 ISO container: classification, size, total weight
Maximum Total weight	**30,000 kg**		
Container dimension	12,192 x 2,700 x 3,000 mm		

GE Proprietary Information: CONFIDENTIAL! Use or disclosure of data contained on this sheet is subject to the restrictions on the cover or on the first page.

Aspect	Description	Guideline	Guideline name
Construction type	**GP** bulk goods container	According to ISO 6346	ISO container codification, identification and designation
Container corner		ISO 1161	Identification and designation: Container corner fittings requirements

3 Handling

These containers are **not stackable**.

To ensure safe handling of the containers, the international guidelines below must be complied with.

Aspect	Guideline	Guideline name
Lifting	Following the standard	Type 1 ISO container:
Transporting	ISO 3874	Handling and securing
Switching off		
Supporting	**Not stackable!**	
Securing		

3.1 Lifting

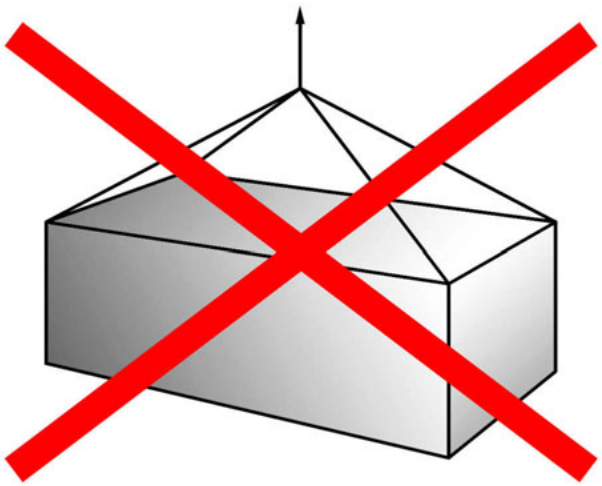

WRONG!

Lifting at upper corner fittings:

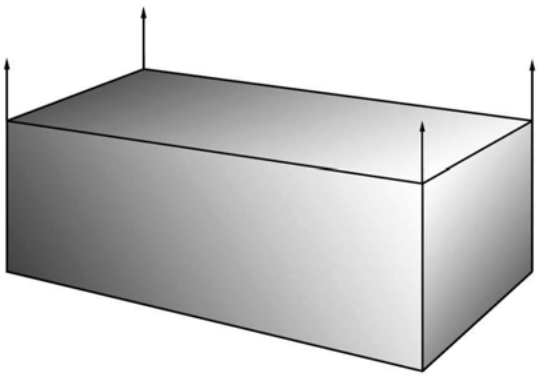

Apply lifting powers vertically. Comply with further specifications in ISO 3874!

4 Assembly points for lifting equipment inside the container

The assembly points (M12 threaded bores) are all positioned in the roof cross-beams at a distance of approx. 180mm from the container wall (pos. ①).

GE Proprietary Information: CONFIDENTIAL! Use or disclosure of data contained on this sheet is subject to the restrictions on the cover or on the first page.

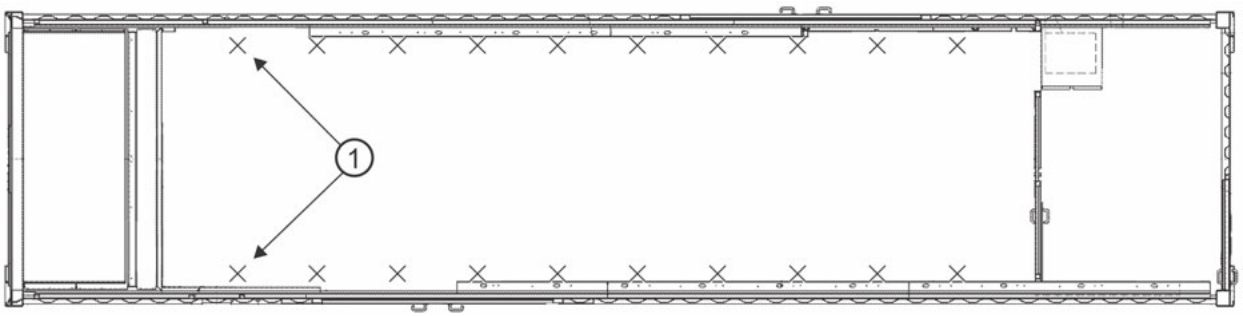

Overview of the assembly points

The M12 threaded bores may be marked with a yellow hexagonal head screw (pos. ①).

In addition, a yellow safety sticker has been attached to the container side wall (pos. ③).

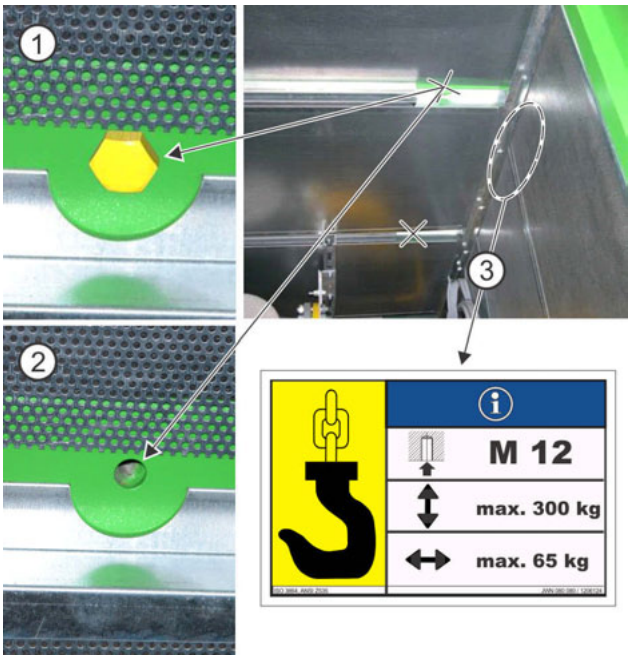

5 Safety sticker

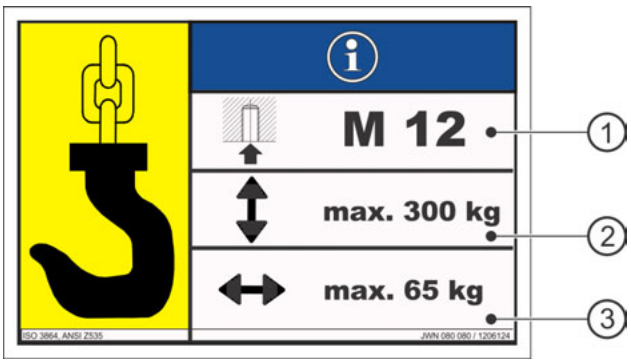

Overview safety stickers

① The assembly points on the container roof are M12 threaded bores.

GE Proprietary Information: CONFIDENTIAL! Use or disclosure of data contained on this sheet is subject to the restrictions on the cover or on the first page.

② The maximum admissible vertical load is 300kg.

③ The maximum admissible horizontal load is 65kg.

GE Proprietary Information: CONFIDENTIAL! Use or disclosure of data contained on this sheet is subject to the restrictions on the cover or on the first page.

Technical Instruction: TA 1000-0064
Lifting Jenbacher special containers (3m/9.8ft) (Containers with top container corner fittings at both container ends)

1 Purpose 1
2 Lifting capacity 1
3 Designated use 1
4 Load characteristics 2
5 Normal operating conditions 2
6 Directions for application and use 5
7 Detaching the load suspension device 10
8 Storing the lifting frame 12
9 Declaration of Conformity 13

Applies to GE Jenbacher special containers (3m) with top corner fittings at both container ends

Please observe the safety and hazard signs in the safety instructions (TI 2300-0005) and wear the appropriate personal protective equipment.

1 Purpose

This Technical Instruction describes the lifting of Jenbacher special containers (3m) with top container corners at both container ends (TI 1000-0048) using load suspension devices (see Fig. 1).

The load suspension device must consist of two separate, equally large cross-beams to ensure that the container can be lifted and moved in a stable manner.

Fig. 1:

2 Lifting capacity

Both load suspension devices must be rated to lift a maximum load of 20,000 kg each

(i.e. being able to lift a joint load of 30,000 kg).

3 Designated use

The designated use of this load suspension device is to lift GE Jenbacher special containers (3m) with top container corner fittings at both container ends (see TI 1000-0048), in accordance with the relevant European and national standards.

GE Proprietary Information: CONFIDENTIAL! Use or disclosure of data contained on this sheet is subject to the restrictions on the cover or on the first page.

4 Load characteristics

As regards their external dimensions, container corner fittings and stability, GE Jenbacher containers comply with the following specifications and international guidelines.

Aspect	Description	Guideline	Guideline name
Container type	**Special container** With lower corner fittings in line with Type 1 ISO containers (12192 x 2438)	According to ISO 668	Type 1 ISO container: classification, size, total weight
Maximum Total weight	**30,000 kg**		
Container dimension	12,192 x 2,700 x 3,000 mm		
Construction type	**GP** bulk goods container	According to ISO 6346	ISO container codification, identification and designation
Container corner		ISO 1161	Identification and designation: Container corner fittings requirements

5 Normal operating conditions

The designated use of this load suspension device is to lift GE Jenbacher special containers (3m) with top container corner fittings at both container ends (see TI 1000-0048), in accordance with the relevant European and national standards, with the exception of the following operating restrictions.

User guidelines

Make sure that this load suspension device is only used by a trained loader. When using the load suspension device, always make sure that

- should not have suffered damage that may have an adverse effect on safety and functioning (e.g. fractures, notches, cracks, cuts, erosion, distortion, damage as a result of heat impact, etc.),
- the device is not overloaded due to jolting,
- is not used if the lifting capacity indicated on the plate (load capacity tag, type plate, label, see Fig. 3) is exceeded,
- is not loaded asymmetrically without appropriate measures being taken,
- the device is handled and loaded appropriately when using shortening devices

It is also prohibited

- for anyone to stand under suspended loads or cross-beams.
- for anyone to be in the immediate vicinity when cross-beams are being lowered into position.
- the lugs, see Fig. 2, must not be used for lifting. These are only intended for bringing the cross-beam into position from underneath, using ropes.

GE Proprietary Information: CONFIDENTIAL! Use or disclosure of data contained on this sheet is subject to the restrictions on the cover or on the first page.

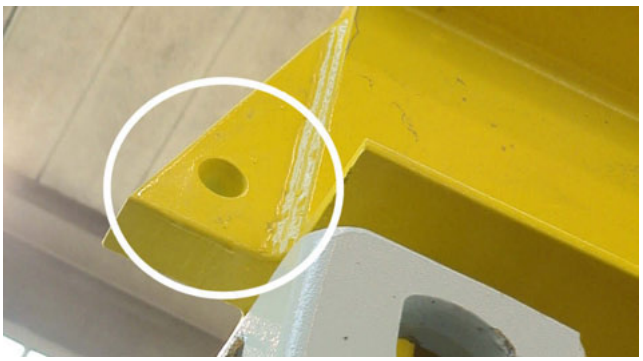

Fig. 3:

Failure to observe the above instructions and improper use of the device can result in bodily injury and damage to property

Maintenance

Make sure that this load suspension device is checked by an expert at least once a year for external damage, distortions, wear and corrosion, cracks and breaks and rejected if the defects found are in excess of tolerance values. When carrying out maintenance work, do not make any modifications to the load suspension device which will affect its operation and lifting capacity.

Fig. 3:

Restrictions on the use of the load suspension device

In the event of high temperatures, the lifting capacity of the load suspension device must be reduced accordingly. Always check whether the load suspension device can be used in aggressive environments before actually using it.

GE Proprietary Information: CONFIDENTIAL! Use or disclosure of data contained on this sheet is subject to the restrictions on the cover or on the first page.

Never use the load suspension device in circumstances in which the load could accidentally become detached.

GE Proprietary Information: CONFIDENTIAL! Use or disclosure of data contained on this sheet is subject to the restrictions on the cover or on the first page.

6 Directions for application and use

Lift one of the two cross-beams with a crane hook.

Using the crane hook, bring the cross-beam into position above the corner fittings on the container roof.

A worker must climb up a ladder on to the container roof to check the lifting frame is being positioned properly.

GE Proprietary Information: CONFIDENTIAL! Use or disclosure of data contained on this sheet is subject to the restrictions on the cover or on the first page.

The worker must also wear a safety belt in case he falls.

Slowly bring the lifting frame into position over the corner fittings.

The lifting frame must be in the "Open" position (see Fig. 4) in order to be lowered into the container corner fittings.

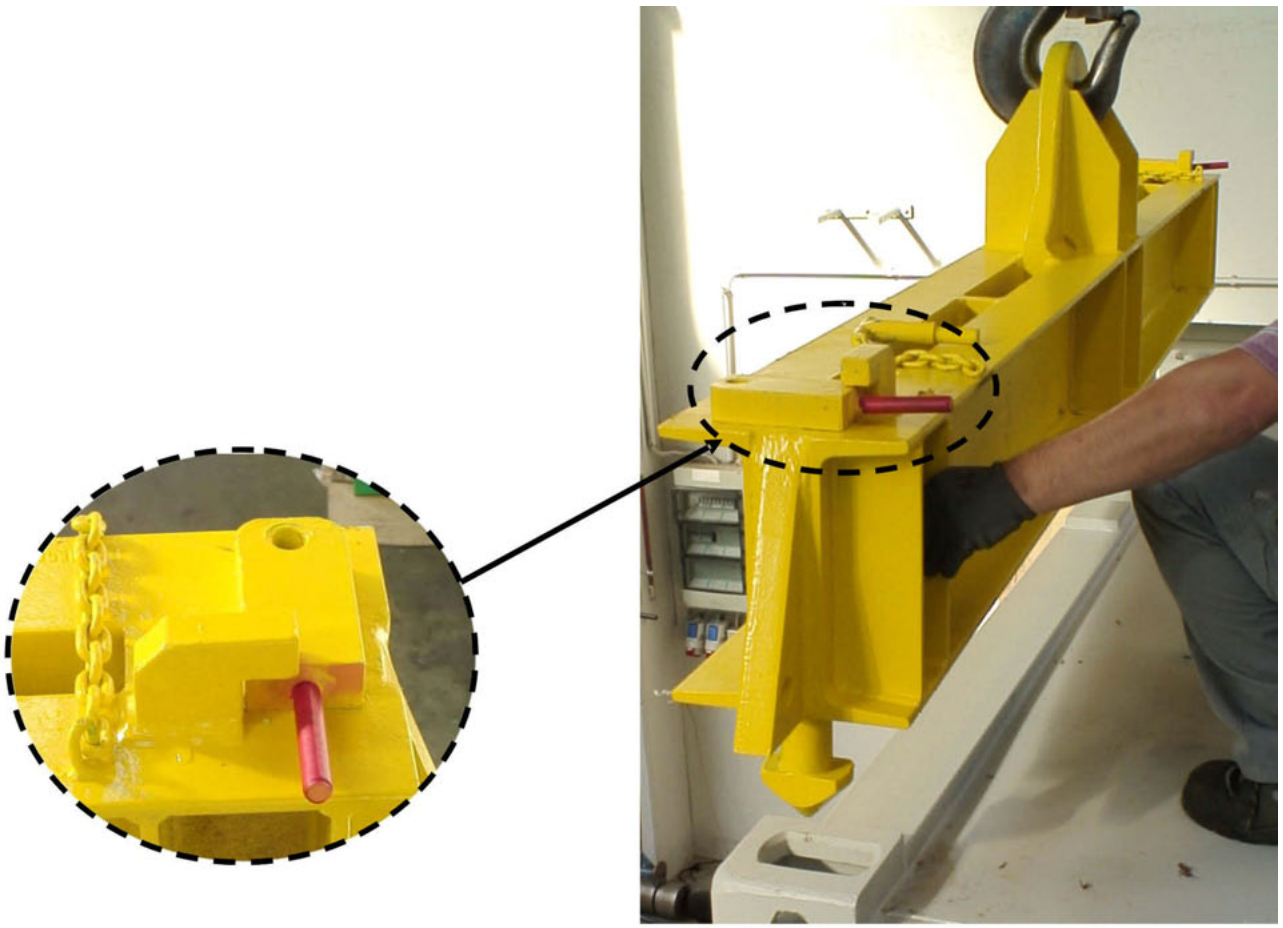

Fig. 4:

GE Proprietary Information: CONFIDENTIAL! Use or disclosure of data contained on this sheet is subject to the restrictions on the cover or on the first page.

Slowly lower the lifting frame with the crane into the corner fittings.

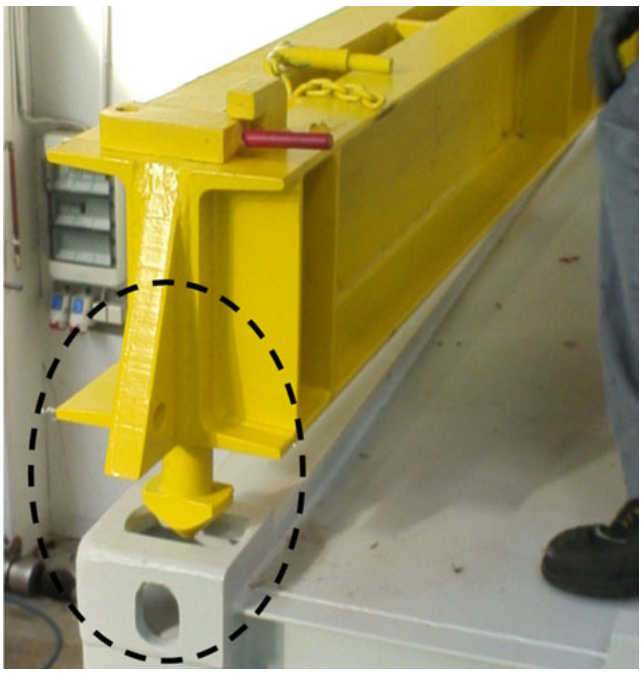

The frame can be locked in this position (see the Figure).

GE Proprietary Information: CONFIDENTIAL! Use or disclosure of data contained on this sheet is subject to the restrictions on the cover or on the first page.

Locking the device:

Pull out the safety pins (pos. 1).

Pull the lever on the frame in the direction of the arrow as shown (Fig. 5).

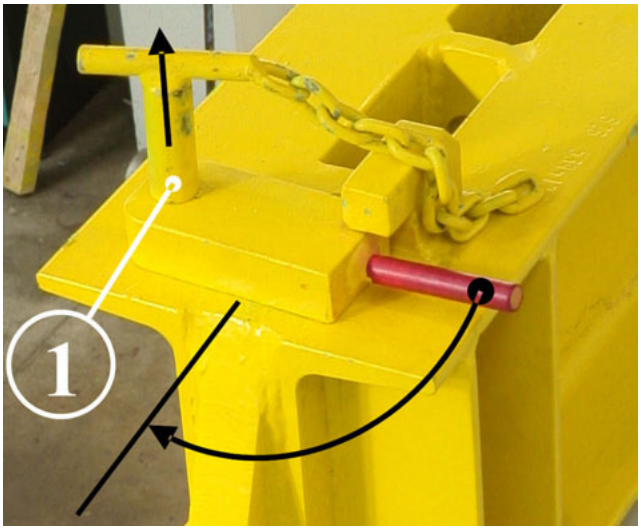

Fig. 5:

If it jams, check the position of the frame in the corner fitting.

After locking the frame , push in the safety pins (pos. 1.).

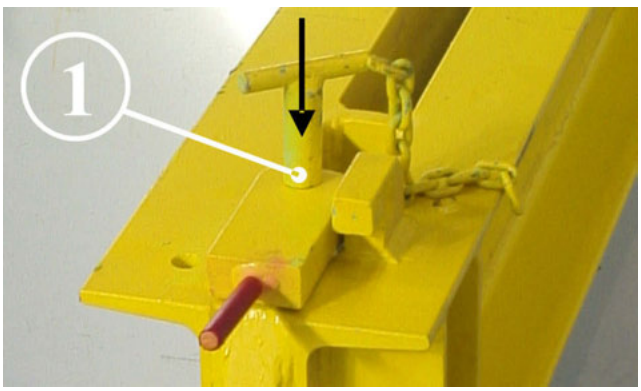

Fig. 6:

GE Proprietary Information: CONFIDENTIAL! Use or disclosure of data contained on this sheet is subject to the restrictions on the cover or on the first page.

The red markings on the frame must now be visible from underneath.

If one of the two frames is correctly fitted on the container, the second one can be fitted on the other side in the same way.

Once both frames have been properly fitted to the container the worker must leave the container roof, and the container can be lifted with the crane hook.

GE Proprietary Information: CONFIDENTIAL! Use or disclosure of data contained on this sheet is subject to the restrictions on the cover or on the first page.

ATTENTION: The crane hooks must move in parallel (i.e. simultaneously), both vertically and horizontally. (see Fig. 7).

If the load suspension device and the load do not move simultaneously both vertically and horizontally, there will be an immediate risk of the load falling.

Fig. 7:

7 Detaching the load suspension device

The containers must be placed safely on the floor!

A worker must climb up a ladder on to the container roof in order to detach the lifting device.

GE Proprietary Information: CONFIDENTIAL! Use or disclosure of data contained on this sheet is subject to the restrictions on the cover or on the first page.

⚠ The worker must also wear a safety belt (see the Figure) in case he falls.

Once hooked, lower the lifting device on to the container roof.

To unlock the frame, pull out the safety pins (Pos. 1) and the move the lever in the direction of the arrow.

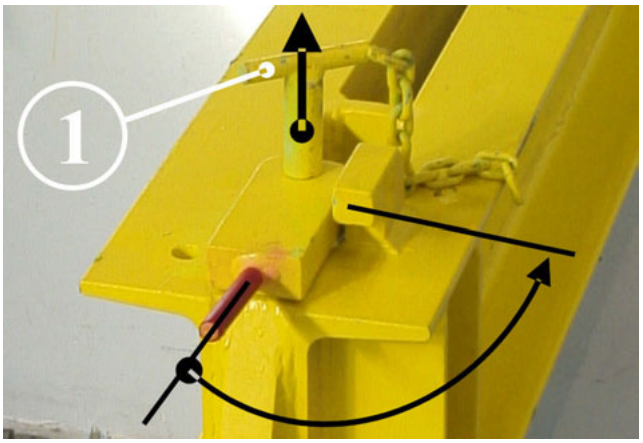

GE Proprietary Information: CONFIDENTIAL! Use or disclosure of data contained on this sheet is subject to the restrictions on the cover or on the first page.

Then push the safety pins back in to lock it in the open position.

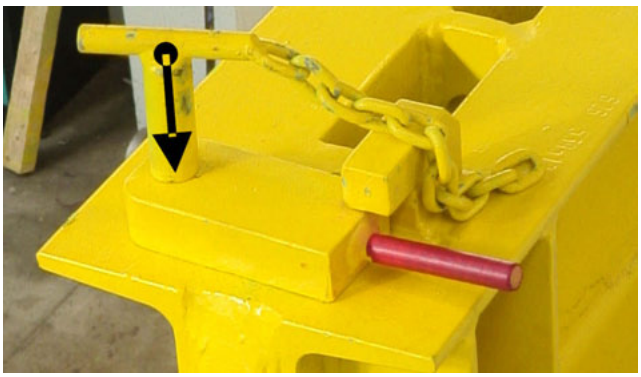

The lifting frame can now be lifted again and stowed away from the container.

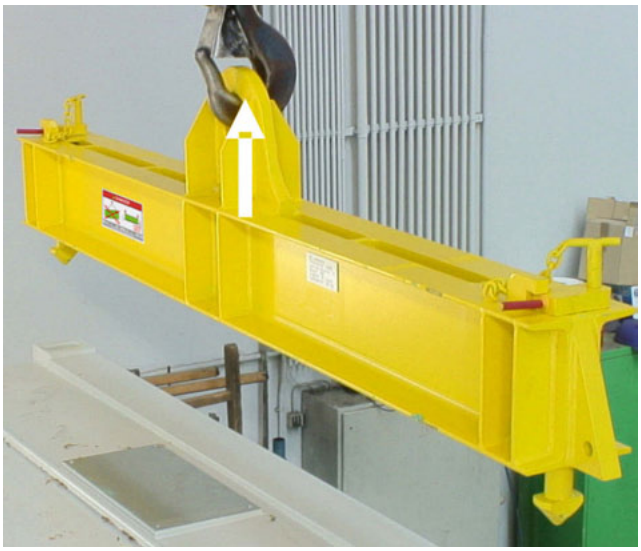

8 Storing the lifting frame

GE Proprietary Information: CONFIDENTIAL! Use or disclosure of data contained on this sheet is subject to the restrictions on the cover or on the first page.

Using the crane, place the lifting frame centrally on a wooden support.

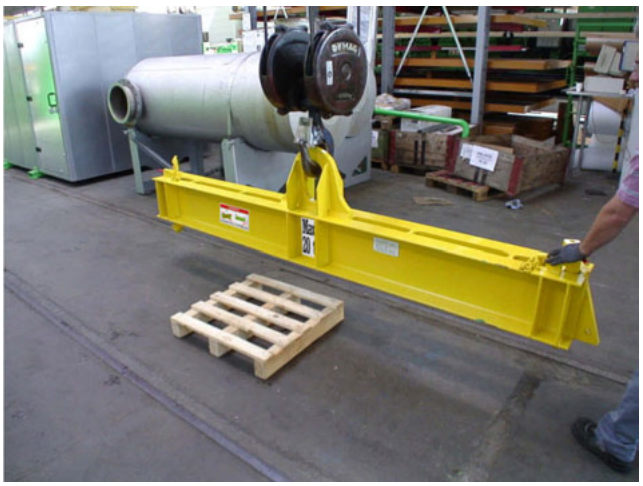

The frame can be placed on e.g. a pallet, as shown in the Figure.

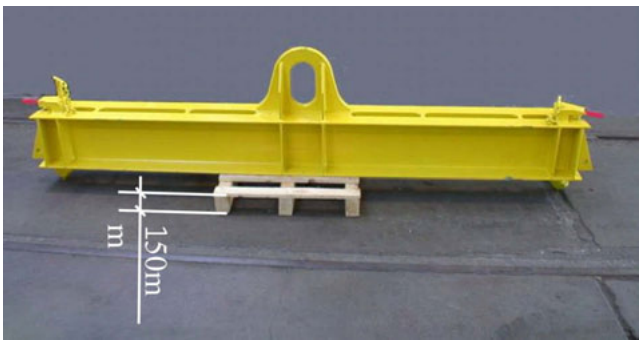

⚠ The support for the lifting frame must have a minimum height of 150 mm and be able to withstand a load of 550 kg.

9 Declaration of Conformity

Appendix: CE Declaration of Conformity

according to CE Directives 98/37 (Machine Safety).

GE Proprietary Information: CONFIDENTIAL! Use or disclosure of data contained on this sheet is subject to the restrictions on the cover or on the first page.

We,

GE Jenbacher GmbH & Co OHG

Achenseestrasse 1 - 3

A-6200 Jenbacher

herewith declare, on our responsibility, that the following equipment

20 TON JUMBO LOAD-BEARING CROSS-BEAM

Part number: 539512

which this declaration refers to, is in accordance with the basic protective requirements of **CE** Guidelines **98/37** (Machine Safety).

The following standards and technical specifications, among others, have been taken into account in order to properly satisfy the requirements specified in the **CE** Directives:

ISO 12100 parts 1 and 2: Safety of Machinery - Basic Concepts, general principles for design.

ISO 3864 Graphical symbols -- Safety Colours and Safety Signs.

EN 13155:2005 Cranes – non-fixed load lifting attachments.

CE Date:	**2008-03**	Country:	USA
Issued:	2011-11	Languages:	DE

Jenbach, 2008-08-22

Head of Development Department

GE Proprietary Information: CONFIDENTIAL! Use or disclosure of data contained on this sheet is subject to the restrictions on the cover or on the first page.

1 Safety 1
2 Assembly numbering system 2
2.1 Welded flange 2
2.2 Grooved pipe ends 2
2.3 Markings on the 3-way valve 4
3 Lifting, moving and installing the container 4
4 Roof installation 5
4.1 Roof construction with FX SYSTEM 5
4.2 Clamped joint 7
4.3 Description of the FX system 7
4.4 FX system assembly parts 8
4.5 Base plate usage examples 10
4.6 FX system beams 10
5 Initial assembly, general 10
5.1 Roof construction assembly drawing 12
5.2 Assembling the I beam to the container roof 13
5.3 Assembling the water pump 16
5.4 Assembling the platen-type heat exchanger 16
5.5 Assembling the pressure expansion vessels 18
5.6 Assembling upright silencers 18
5.7 Assembling exhaust gas heat exchangers 19
5.8 Assembling the air-intake box 20
5.9 Assembling the E installation 20
5.10 Main components 20
5.11 Pipework 20
5.11.1 Assembly with flanged pipe connections at each end 20
5.11.2 Installation of the Vitaulic® flange adapter 21
5.11.3 Fitting the Vitaulic® pipe coupling 25
5.12 Silencer condensate drain 28
5.13 Cabling 29
5.14 Ventilation 29
5.15 gas connection 30
5.16 Exhaust gas pipe 31
5.17 Container cable entry 32
5.18 Transport guards 32
5.19 Tightening torques for metric thread (guide values) 33
6 Disassembly 33
6.1 Disassembly for transport by sea 33
6.2 Disassembly for road/rail transport 34
6.3 Assembly at the customer's location 35

1 Safety

See TI 2300-0005 for safety instructions!

GE Proprietary Information: CONFIDENTIAL! Use or disclosure of data contained on this sheet is subject to the restrictions on the cover or on the first page.

Extreme caution is required when carrying out maintenance and installation work on the container roof. **Ensure that all persons on the roof are always secured against falling off the container using a safety belt! Anyone climbing onto the container roof will do so at his own risk!**

Wear safety belt / danger of falling!

Climbing onto the container roof without wearing a safety belt is extremely dangerous!

Secure the belt to the positions on the container roof especially provided for this purpose!

2 Assembly numbering system

In order to match the flanges correctly, the connections have all been provided with punched markings.

2.1 Welded flange

Make sure that only flanges with matching numbers are bolted together. The punched numbers must always be opposite each other.

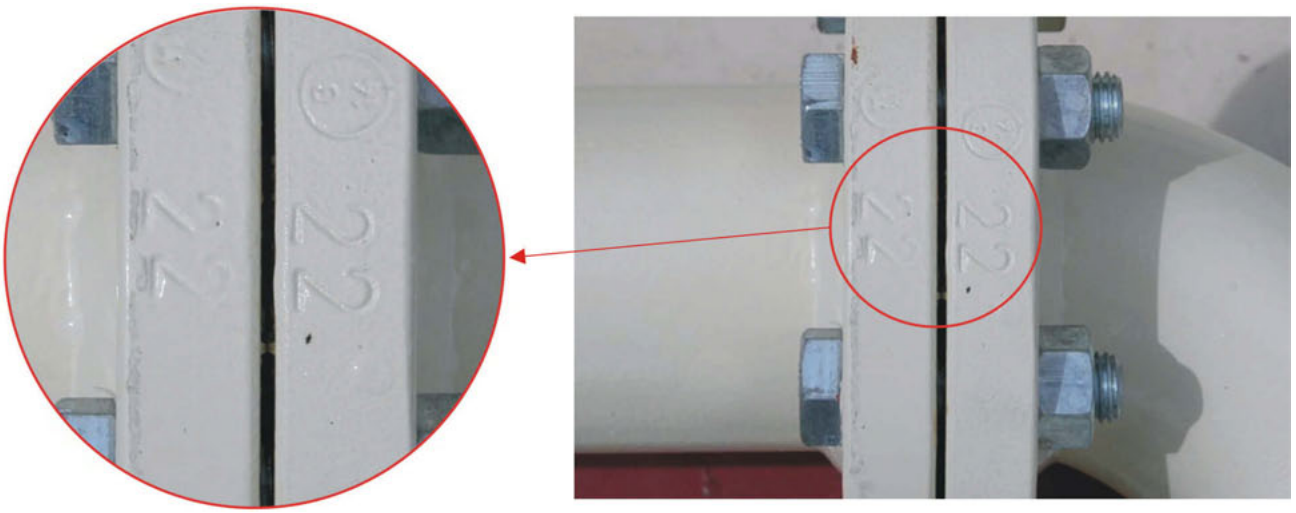

Connection designation marked on the flange

2.2 Grooved pipe ends

The pipe ends are marked with punched numbers. These numbers correspond to the items in the "Cooling water line" drawing and parts list.

GE Proprietary Information: CONFIDENTIAL! Use or disclosure of data contained on this sheet is subject to the restrictions on the cover or on the first page.

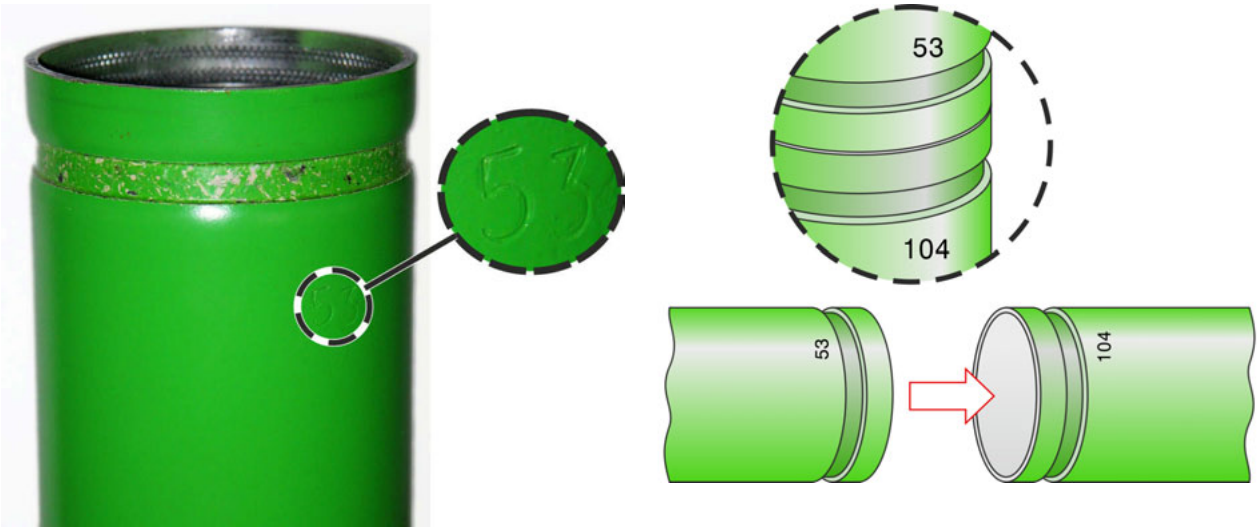

Connection designation marked on the pipe end

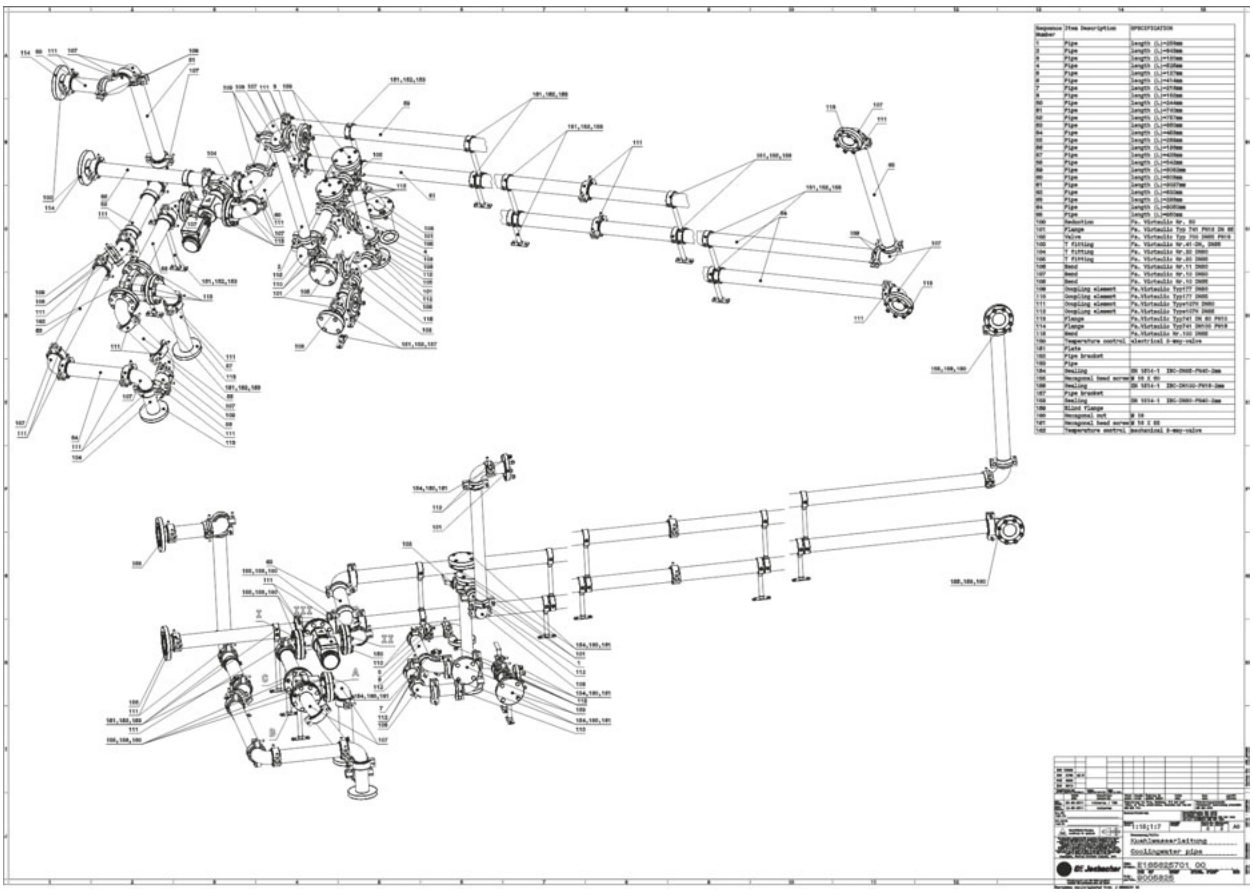

*Example: "Cooling water line" drawing with item numbers (See Section „*Anlagentechnisches Schema (General Arrangement drawing)*" in the description/operating instructions)*

GE Proprietary Information: CONFIDENTIAL! Use or disclosure of data contained on this sheet is subject to the restrictions on the cover or on the first page.

2.3 Markings on the 3-way valve

The connections on a 3-way valve are marked with the letters "A-B-C" or the numbers "I-II-III". When the valve is installed, the positions must match the data in the technical diagram or specifications.

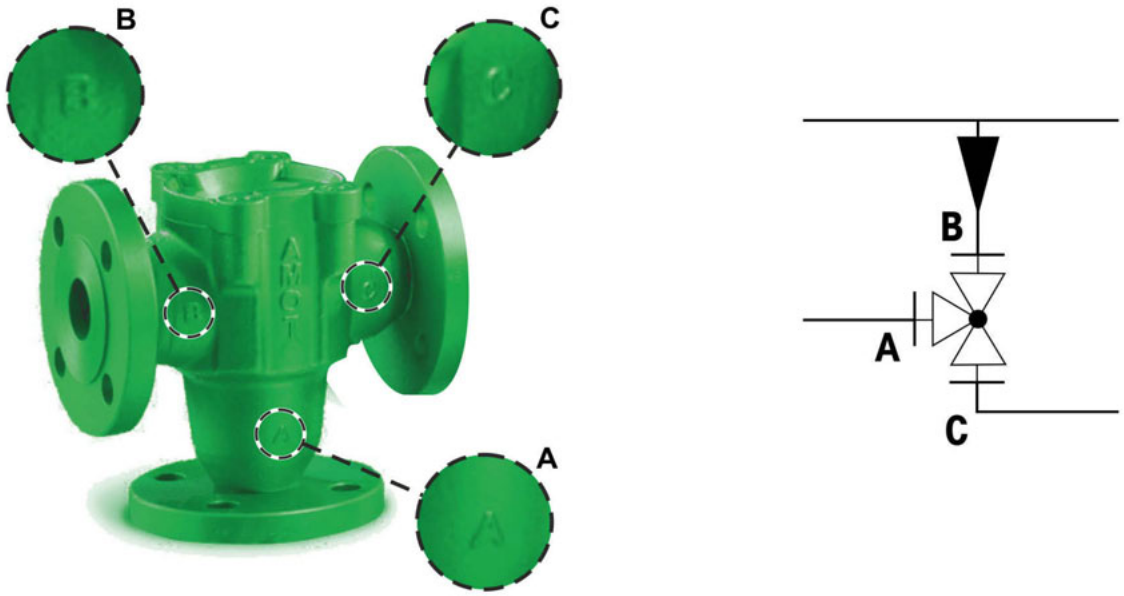

Inscription on the 3-way valve using the "A-B-C" letter system and corresponding illustration in the technical diagram

3 Lifting, moving and installing the container

Prepare the foundation according to TI 1000-0041.

When placing the container from the truck onto the foundation, the instructions in the following TIs must be observed:

- TI 1000-0047)
- TI 1000-0048
- TI 1000-0049

The container can be aligned using the alignment and support plates as described in TI 1000-0041. The plates are supplied separately and are stored in the container's control room.

GE Proprietary Information: CONFIDENTIAL! Use or disclosure of data contained on this sheet is subject to the restrictions on the cover or on the first page.

4 Roof installation

4.1 Roof construction with FX SYSTEM

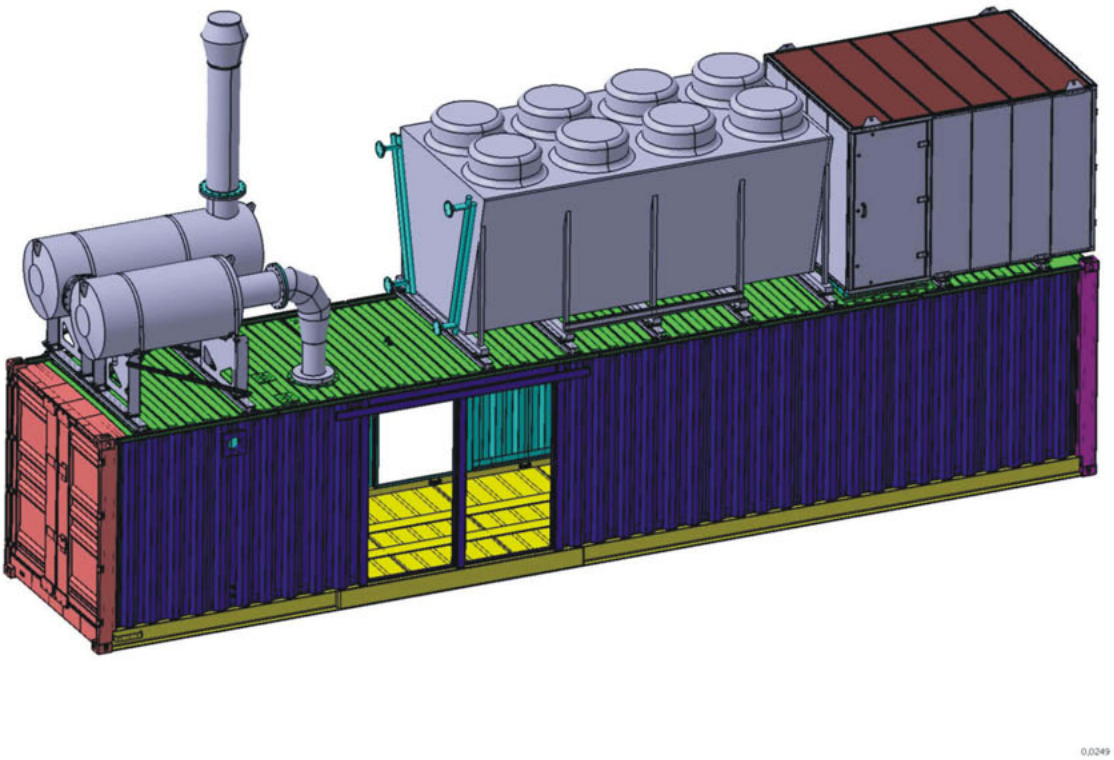

GE Proprietary Information: CONFIDENTIAL! Use or disclosure of data contained on this sheet is subject to the restrictions on the cover or on the first page.

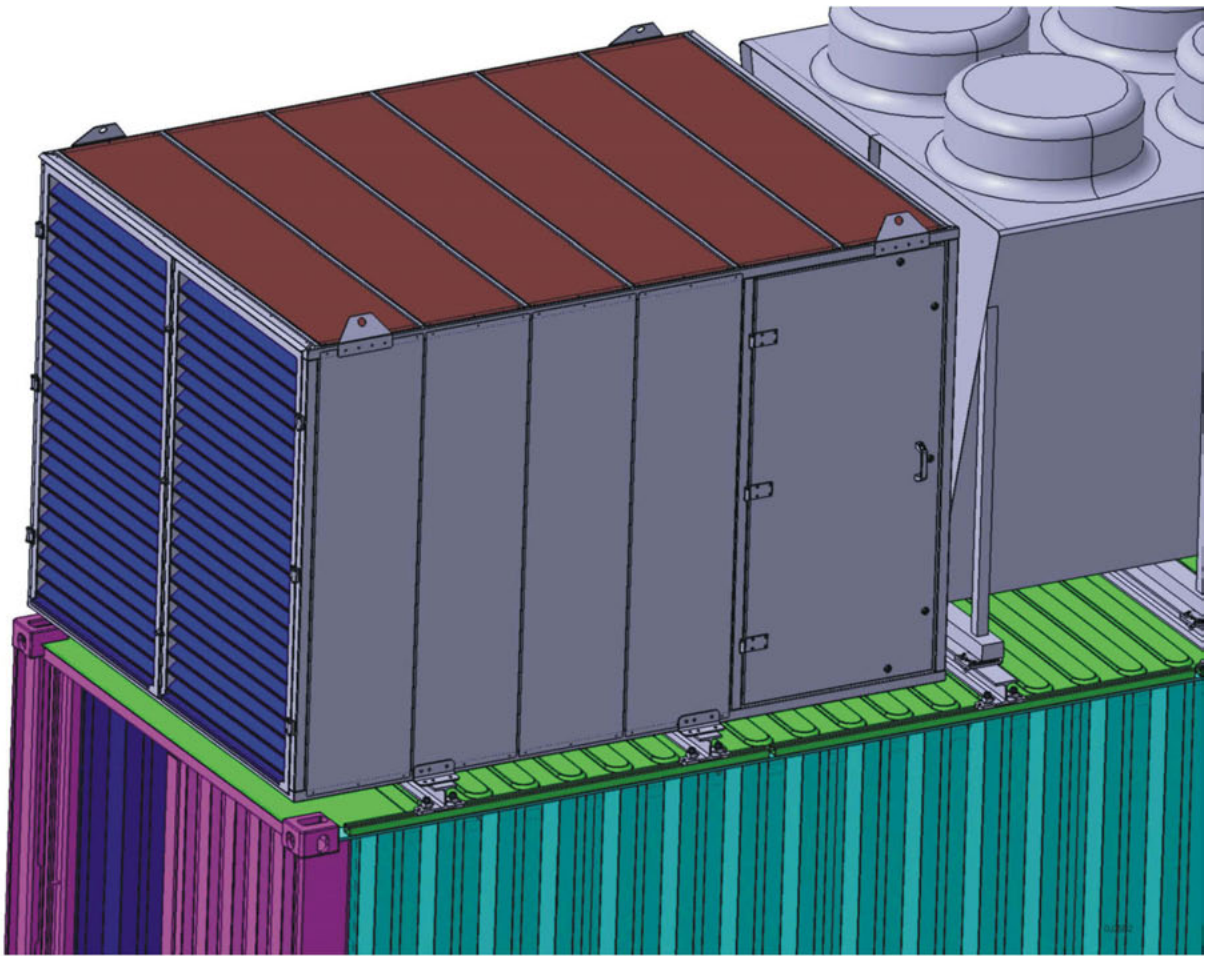

GE Proprietary Information: CONFIDENTIAL! Use or disclosure of data contained on this sheet is subject to the restrictions on the cover or on the first page.

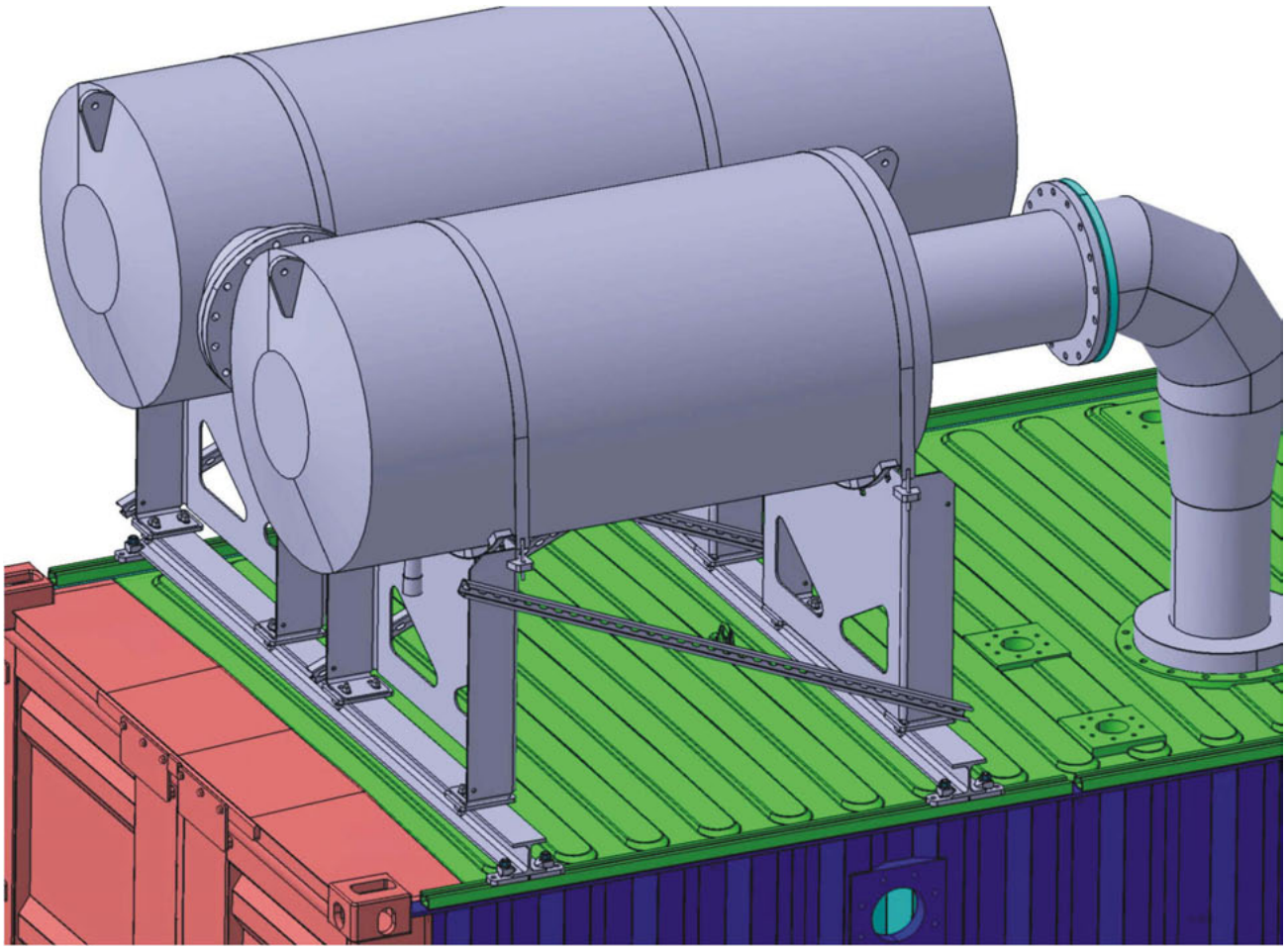

4.2 Clamped joint

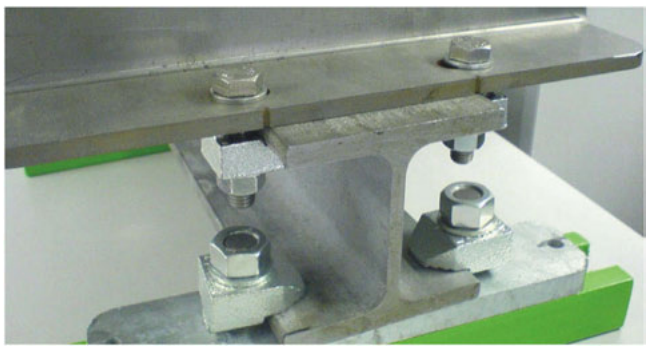

4.3 Description of the FX system

For the FX System (Flexible roof connection system), the longitudinal container sides have been fitted with assembly rails. To be able to drain rain water from the roof, the rails have been interrupted every two metres. Using hammer

GE Proprietary Information: CONFIDENTIAL! Use or disclosure of data contained on this sheet is subject to the restrictions on the cover or on the first page.

head bolts and intermediate plates connected to the rails, the I beams can be fitted to the longitudinal container sides at any location using clamping pieces. Components and parts can be attached onto these I beams at the required location using specially designed base plates. This results in a large amount of flexibility in both longitudinal and transverse direction when assembling components. When using upright silencers, larger I beams are used for reasons of stability.

4.4 FX system assembly parts

Hammer head bolt

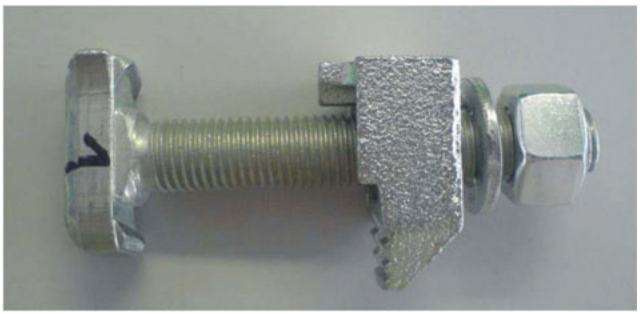

Spacer plate

The spacer plate may consist of a single (20 mm) or a split (2 x 10 mm) plate.
The split version is used as standard. The single spacer plate is fitted over the gaps between the T-slot rails.

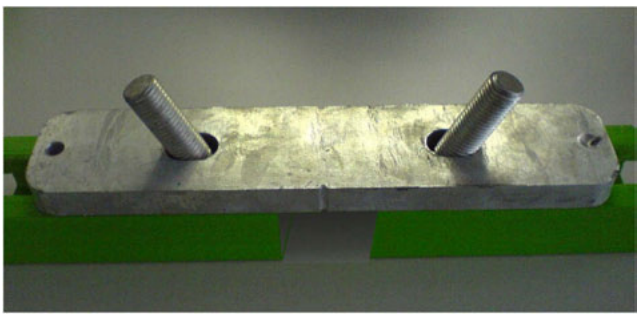

20 mm spacer plate at the gap

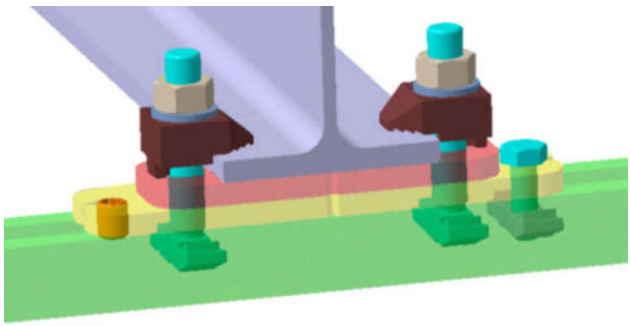

split intermediate plate 2 x 10 mm

GE Proprietary Information: CONFIDENTIAL! Use or disclosure of data contained on this sheet is subject to the restrictions on the cover or on the first page.

Clamping pieces

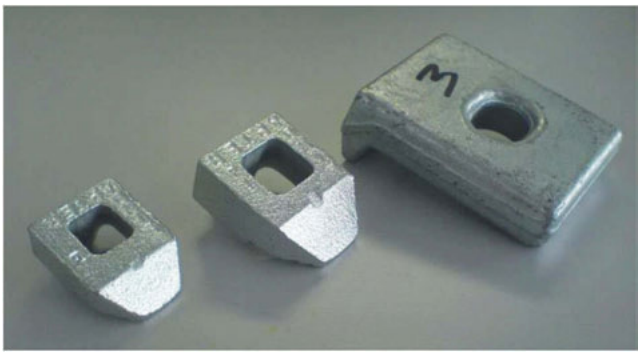

Base plate

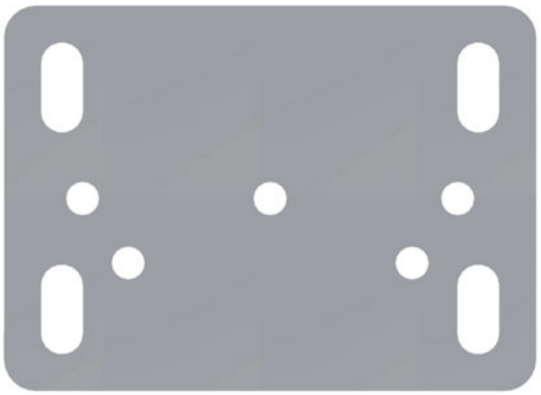

GE Proprietary Information: CONFIDENTIAL! Use or disclosure of data contained on this sheet is subject to the restrictions on the cover or on the first page.

4.5 Base plate usage examples

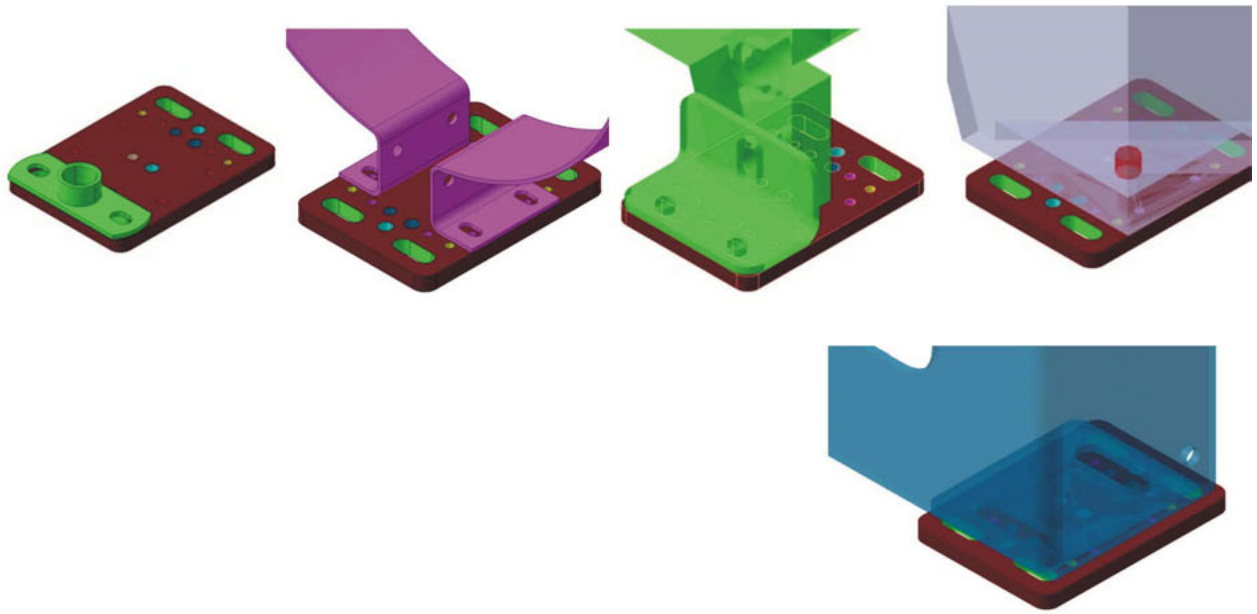

4.6 FX system beams

- I 100 beams, 2.4m and 3m long
- I 180 beams, 2.4m and 3m long (for upright silencers only)

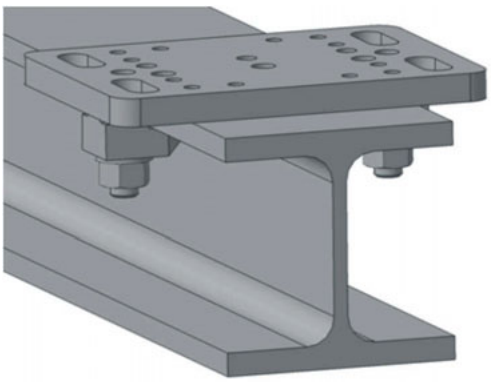

5 Initial assembly, general

Prepare the I-beam version as shown in the assembly drawing (I-100 or I-180 beam)

GE Proprietary Information: CONFIDENTIAL! Use or disclosure of data contained on this sheet is subject to the restrictions on the cover or on the first page.

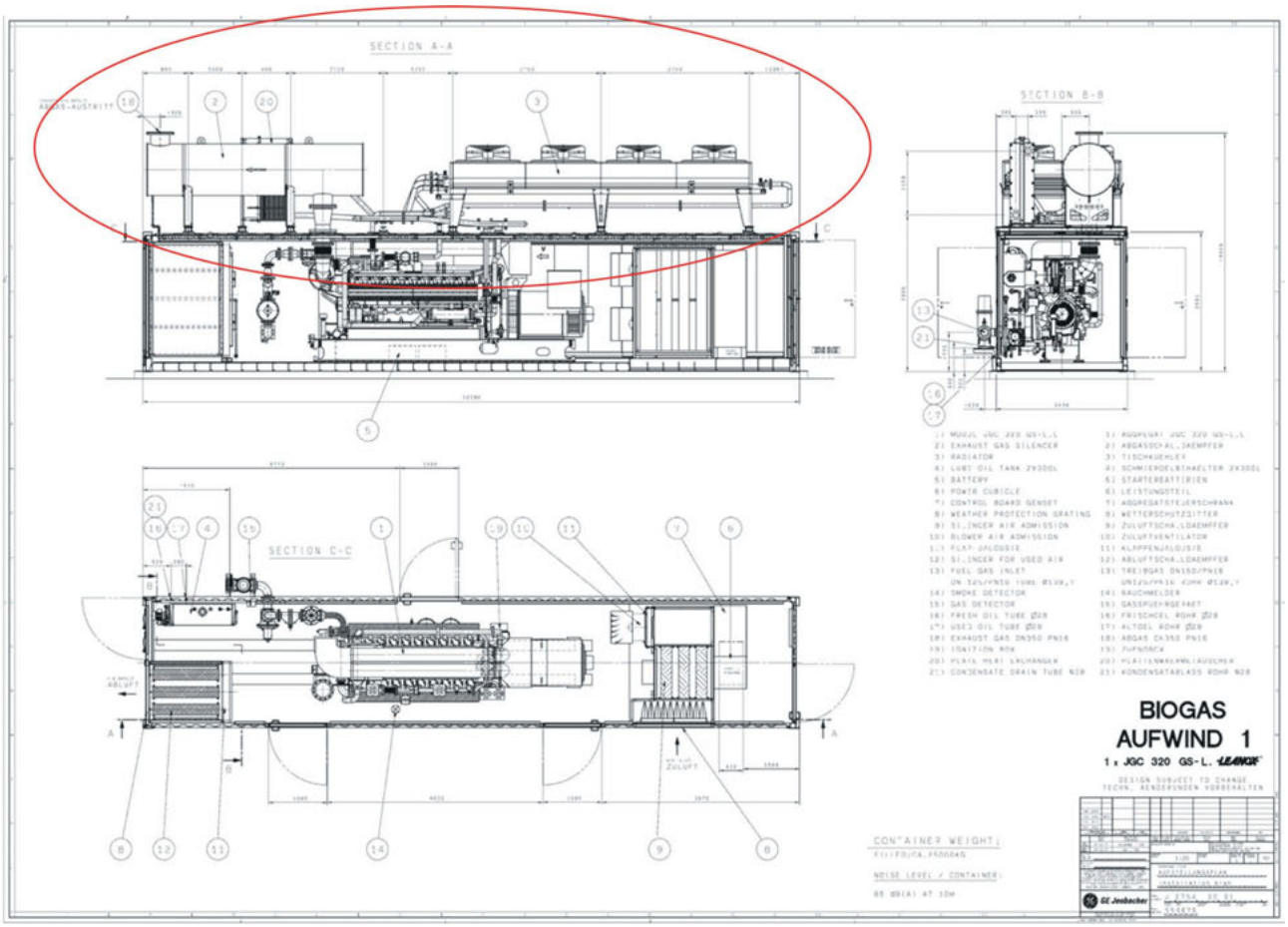

GE Proprietary Information: CONFIDENTIAL! Use or disclosure of data contained on this sheet is subject to the restrictions on the cover or on the first page.

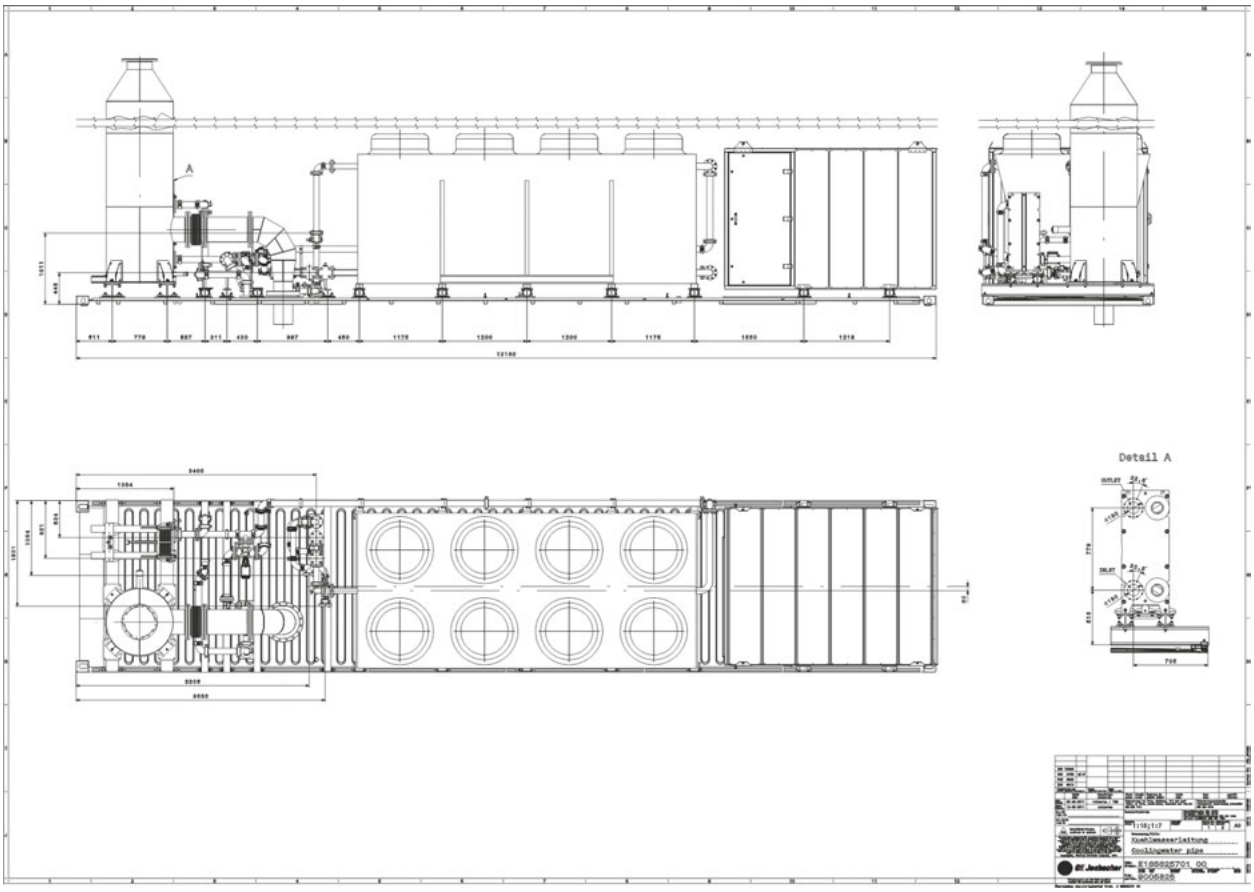

5.1 Roof construction assembly drawing

Prepare the required number of base plates.

Screw two stud bolts **M12x50** (Pos.1) from below into every base plate to fix to the I beam.

Screw one / two stud bolt(s) (Pos. 2) of sufficient length from above into every base plate to fix components (such as table coolers, silencers and platen-type heat exchangers ....).

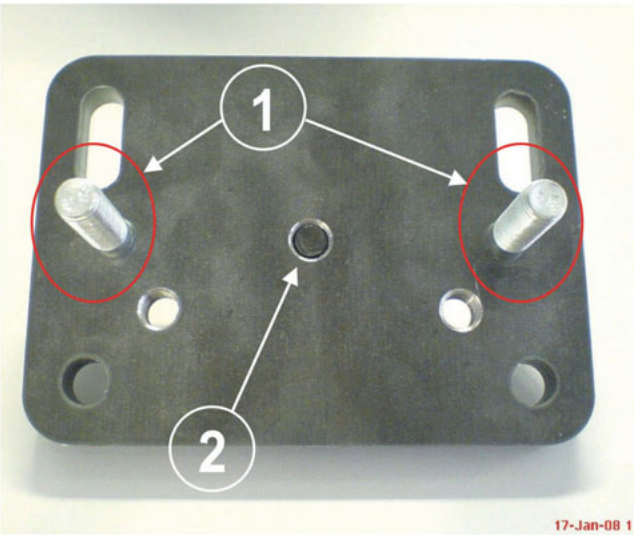

GE Proprietary Information: CONFIDENTIAL! Use or disclosure of data contained on this sheet is subject to the restrictions on the cover or on the first page.

5.2 Assembling the I beam to the container roof

Place the I-beams on the ground and loosely mount the base plates as shown in the assembly drawing using the clamping elements

(to align the base plates).

Mount the component on to the prepared base plates on the I-beams and bolt it tight.

Position the beams by sliding them sideways according to the assembly drawing.

Fit the spacer plates on to the base rails using sufficient M16 hammer head bolts and position the base plates according to the assembly drawing.

Incline the hammer head bolts outward to make it easier to fit the I-beams.

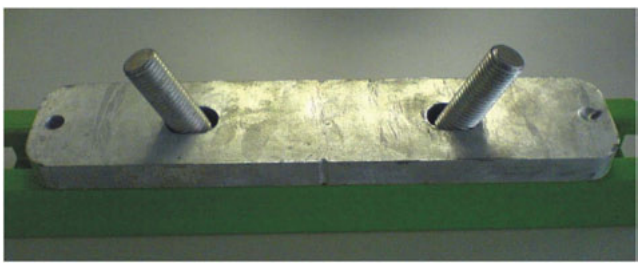

GE Proprietary Information: CONFIDENTIAL! Use or disclosure of data contained on this sheet is subject to the restrictions on the cover or on the first page.

Lift the component together with the I-beam into the intended position on the container roof.

When lowering the component onto the rail, the clamps can be adjusted as required.

Warning! Pinch point hazard - hands

Align the hammer head bolts, loosely fit the clamping jaw together with nuts and washers.

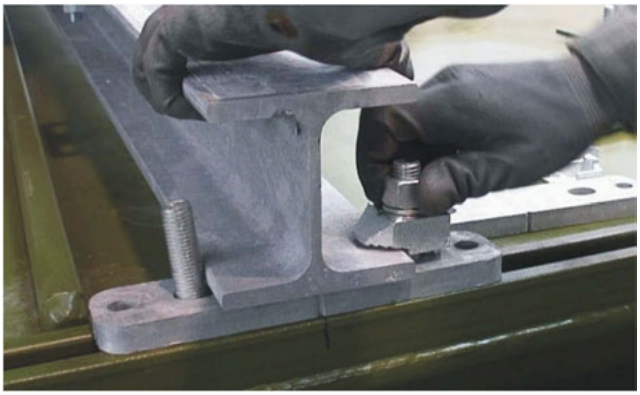

Ensure that the I-beams are flush with the rails at one end as shown in the assembly drawing so as to fix the correct starting position for the installation at the customer.

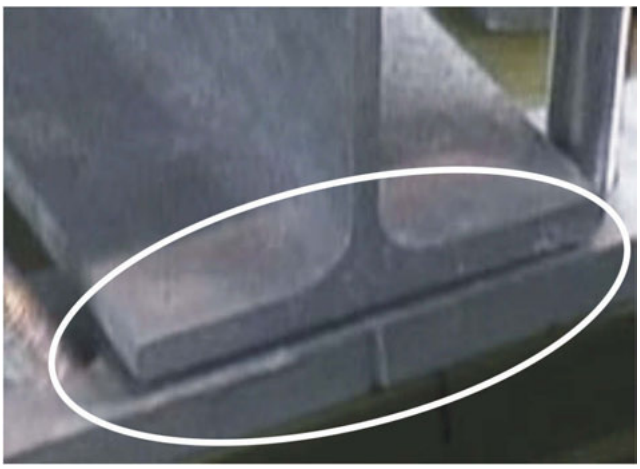

Tighten all bolted clamping joints once the position of the component is fixed.

GE Proprietary Information: CONFIDENTIAL! Use or disclosure of data contained on this sheet is subject to the restrictions on the cover or on the first page.

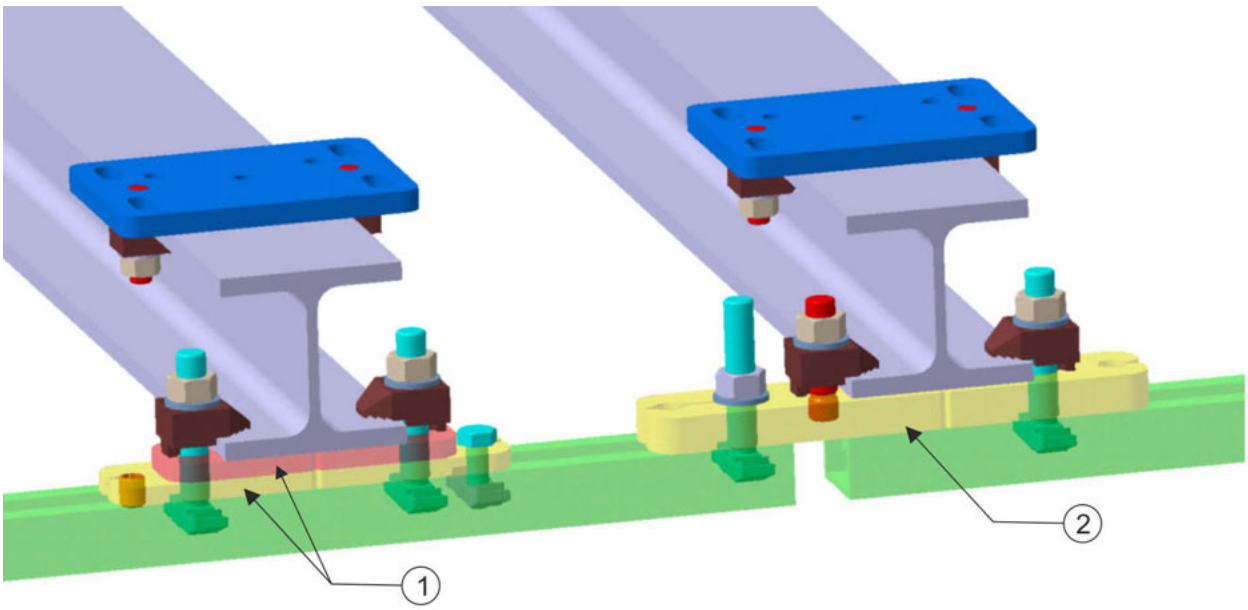

①	Split spacer plate (2 x 10 mm) where there is no gap	②	Single (20 mm) spacer plate at the gap between the T-slot rails.

Mount all the other components in the same way.

GE Proprietary Information: CONFIDENTIAL! Use or disclosure of data contained on this sheet is subject to the restrictions on the cover or on the first page.

5.3 Assembling the water pump

To fit the water pumps, position the pump brackets on I-beams as shown in the assembly drawing and

fasten with clamped joints.

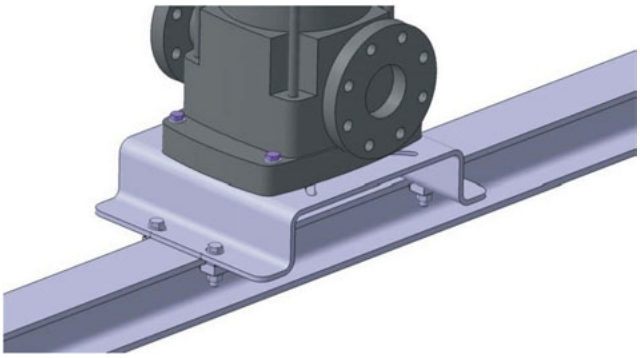

Use the markings on the fastening flanges to facilitate positioning the pump console onto the I beam.

For Grundfos pumps from type CR 20 onwards, the pre-drilled console holes are suited for both longitudinal and transverse assembly. In the case of pumps of other manufacturers, it may be necessary to drill the required holes during assembly.

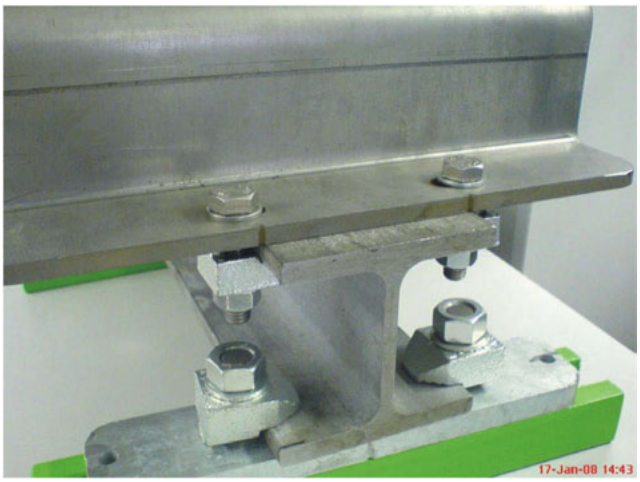

5.4 Assembling the platen-type heat exchanger

The platen-type heat exchanger is assembled in the same way according to the assembly drawing using the angle irons provided for this purpose.

GE Proprietary Information: CONFIDENTIAL! Use or disclosure of data contained on this sheet is subject to the restrictions on the cover or on the first page.

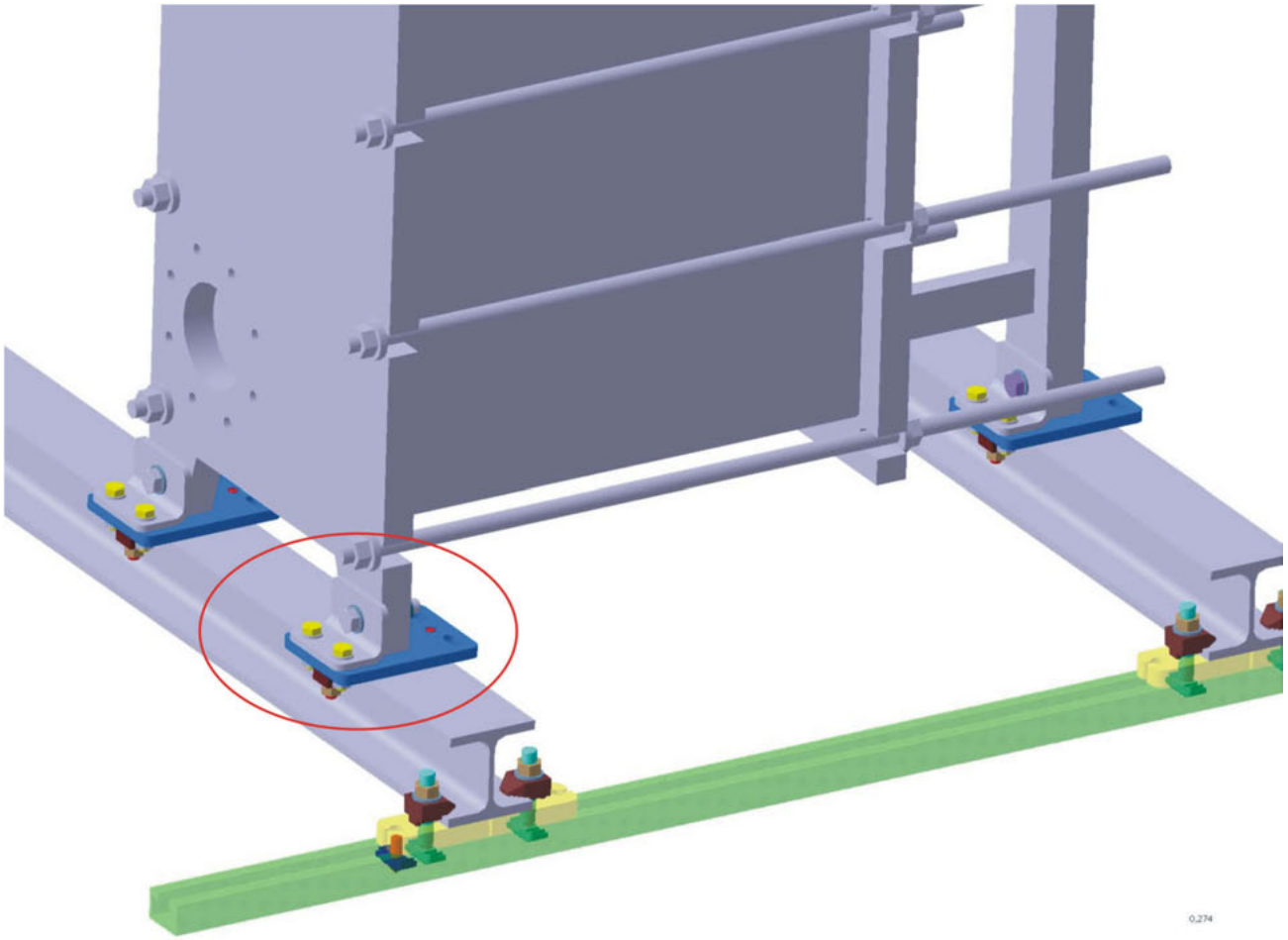

GE Proprietary Information: CONFIDENTIAL! Use or disclosure of data contained on this sheet is subject to the restrictions on the cover or on the first page.

5.5 Assembling the pressure expansion vessels

Cut 4 M8 threads into the base plate (right-hand picture) using the drilling template.

Check the correct alignment (transverse or longitudinal) of the expansion vessel holder.

Assemble the expansion vessel holder to the base plate, position the holder onto the I beam at the required position and fit it using clamping pieces.

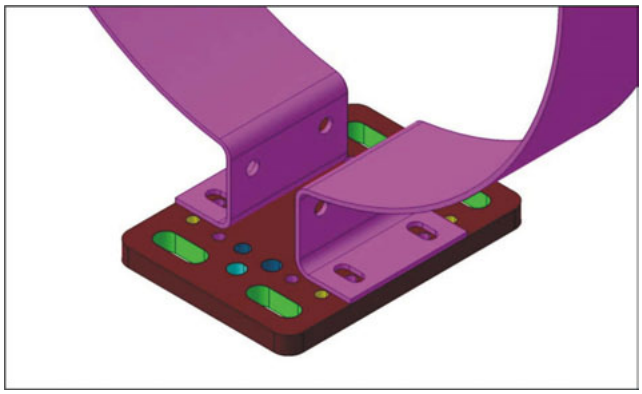

5.6 Assembling upright silencers

When using upright silencers, these must be assembled in the same way. Make sure to use I 180 beams only.

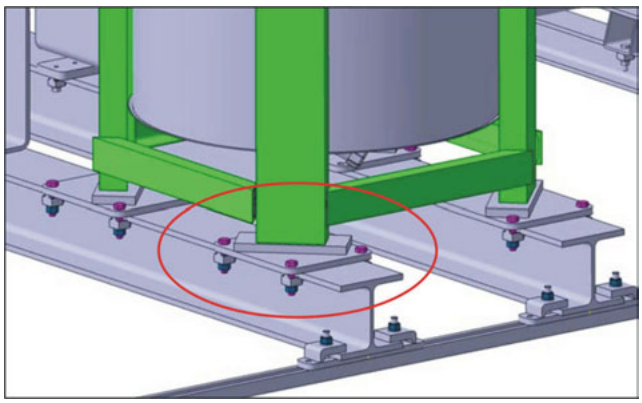

GE Proprietary Information: CONFIDENTIAL! Use or disclosure of data contained on this sheet is subject to the restrictions on the cover or on the first page.

5.7 Assembling exhaust gas heat exchangers

In the case of exhaust gas heat exchangers the feet of which are also fixed to the I 180 beams, insert an intermediate piece between the outer two feet of the heat exchanger which are fixed to I 100 beams.

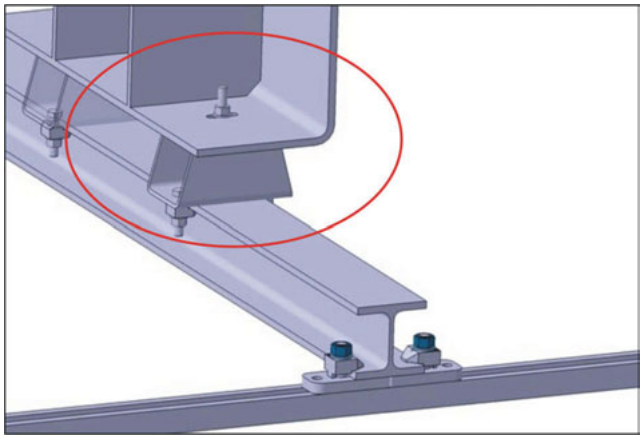

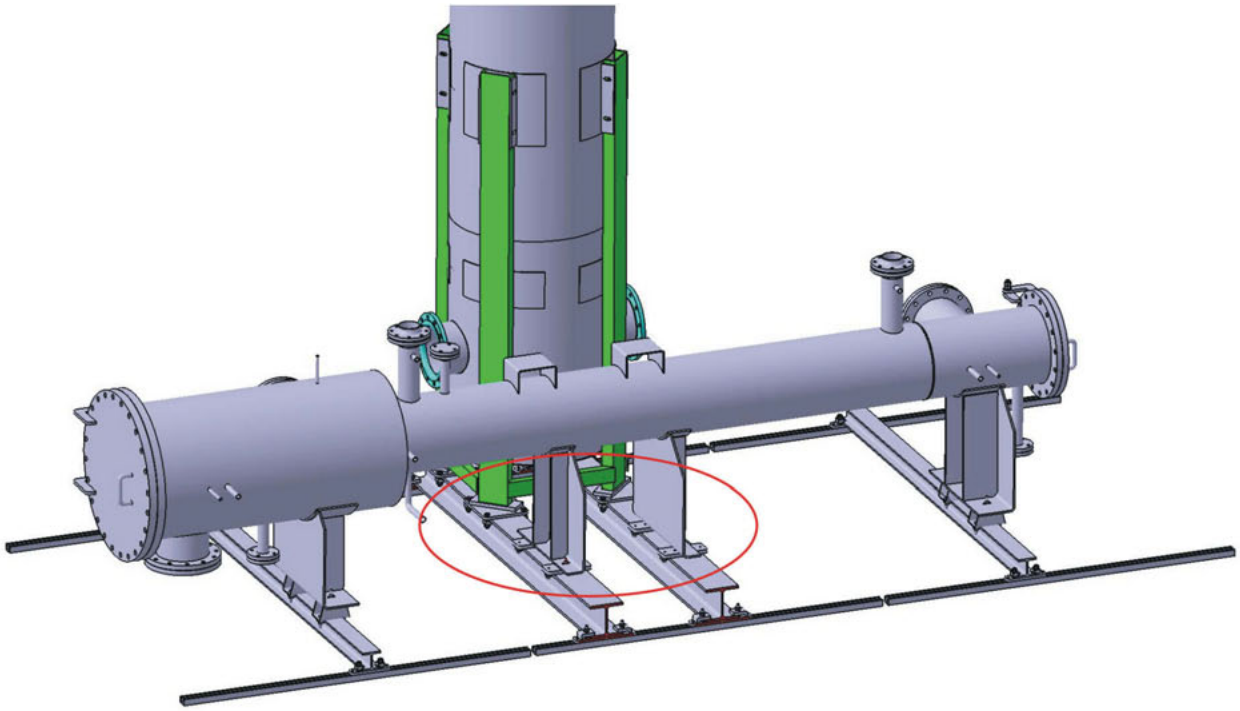

0,0531

GE Proprietary Information: CONFIDENTIAL! Use or disclosure of data contained on this sheet is subject to the restrictions on the cover or on the first page.

5.8 Assembling the air-intake box

The air-intake box is assembled to the I 100 beams using the intended angle irons and clamping joints.

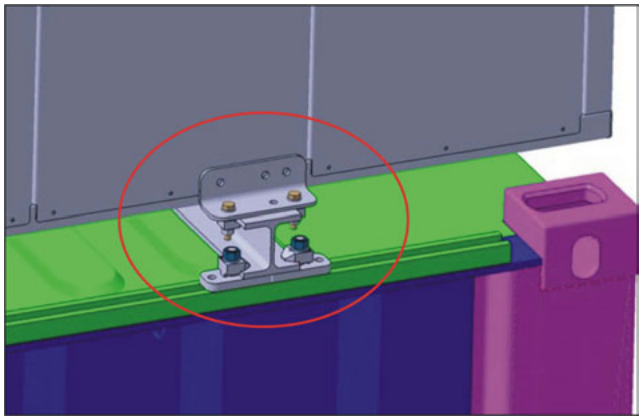

5.9 Assembling the E installation

Fit the cable bushings.

Assemble the entire electric installation as usual. The cable bushing holders can be drilled or screwed directly into the I beams using self-tapping screws.

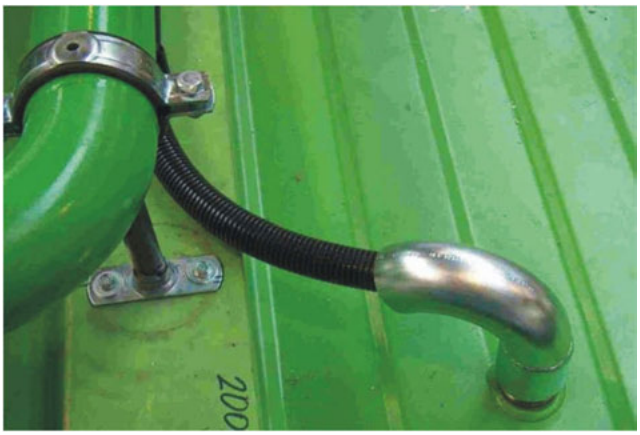

5.10 Main components

Install all main components (such as cooler, silencer, air-intake box, exhaust gas heat exchanger) according to the container's general arrangement drawing. Ensure when assembling the

air-intake box onto the roof that this unit is sealed as specified in TI 1000-0066.

5.11 Pipework

5.11.1 Assembly with flanged pipe connections at each end

Erect the pipework. All pipes are coded on the flanges according to the numbering system. All gaskets and bolts are supplied separately. If more units are installed at the same location, the pipes are all coded using a letter/number combination.

GE Proprietary Information: CONFIDENTIAL! Use or disclosure of data contained on this sheet is subject to the restrictions on the cover or on the first page.

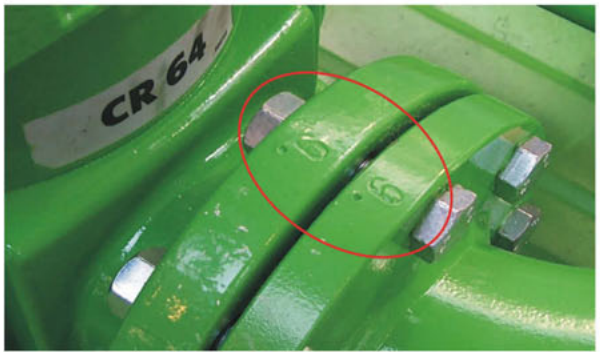

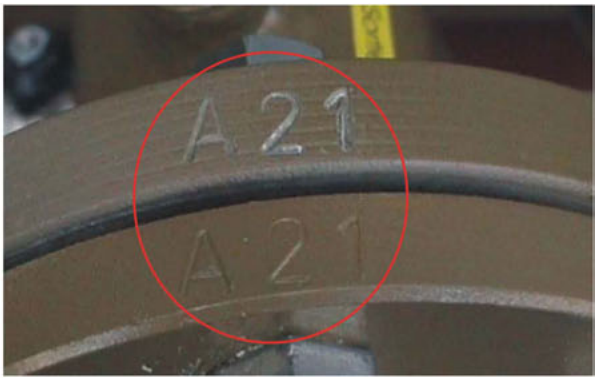

5.11.2 Installation of the Vitaulic® flange adapter

Danger of falling

Never partially-install the flange adapter. There is a danger that it could fall off.

Danger due to pressure

Before working on pipework, the internal pressure must be matched to the external pressure and the lines drained. Media escaping under pressure represents a hazard.

GE Proprietary Information: CONFIDENTIAL! Use or disclosure of data contained on this sheet is subject to the restrictions on the cover or on the first page.

Assembly steps	Type 741
Before installation, check the pipe ends for damage. The assembly area must be smooth and free of dents, bulges, coatings and scoring. Deposits such as oil, grease and dirt must be thoroughly removed before starting the work.	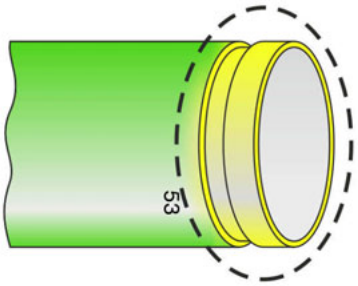
Lubricate the seal lip and the exterior of the seal with silicone grease.	
Mount the seal on the pipe end. Make sure that the seal is correctly positioned (see the illustration on the right) When the seal is correctly mounted the inscription on the outside must face the seat surface of the flange adapter seal. The seal is correctly fitted if the inscription on the seal is not visible. ① Vitaulic® flange adapter ② Seal ③ Companion flange.	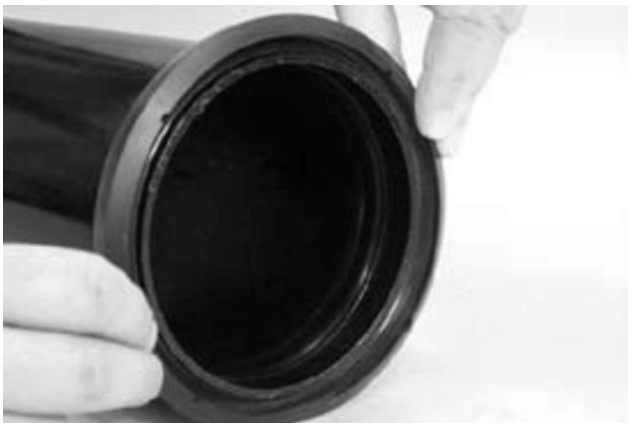 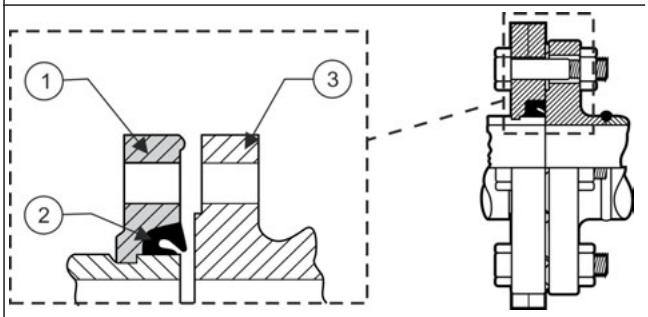

GE Proprietary Information: CONFIDENTIAL! Use or disclosure of data contained on this sheet is subject to the restrictions on the cover or on the first page.

Assembly steps	Type 741
Open the flange adapter fully and fit it over the seal. Make sure that the spring zone of the flange engages in the groove correctly. The adapter is fitted with closing tabs for ease of assembly. If necessary, use an adjustable open-ended spanner on these when lining up the flange holes. This will make it easier to insert the standard flange bolts in to the holes in the companion flange.	
Insert a full shank bolt in the pivot hole and the locking hole on the flange adapter. The flange is now secured on the pipe groove in the correct position.	

GE Proprietary Information: CONFIDENTIAL! Use or disclosure of data contained on this sheet is subject to the restrictions on the cover or on the first page.

Assembly steps	Type 741
Check that the seal is properly seated to protect it against damage.	
Align the bolt holes and connect the flange adapter to the companion flange.	

GE Proprietary Information: CONFIDENTIAL! Use or disclosure of data contained on this sheet is subject to the restrictions on the cover or on the first page.

Assembly steps	Type 741
Tighten the standard flange nuts by hand on both bolts. Then insert the bolts and nuts in the remaining holes.	
Tighten the nuts evenly crosswise as normal on a flanged joint. Tighten until the mating surfaces make metal-to-metal contact or the standard torque for flanged joints has been reached.	

5.11.3 Fitting the Vitaulic® pipe coupling

Danger of falling

Never partially install the pipe coupling. There is a danger that it could fall off

Danger of crushing

Keep your hands away from the coupling opening when inserting the pipe ends into it and when tightening the nuts and bolts. There is a danger of crushing.

Danger from pressure

Before working on pipework, the internal pressure must be matched to the external pressure and the lines drained. Media escaping under pressure represents a hazard.

GE Proprietary Information: CONFIDENTIAL! Use or disclosure of data contained on this sheet is subject to the restrictions on the cover or on the first page.

Assembly steps	Series 107 - rigid	Series 177 - flexible
The pipe coupling is supplied ready-assembled. There is no need to undo the nuts and bolts.		
Before installation, check the ends of the pipes for damage. The assembly area must be smooth and free of dents, bulges, coatings and scoring for the coupling to fulfil its function properly. Deposits such as oil, grease and dirt must be thoroughly removed before starting the work.	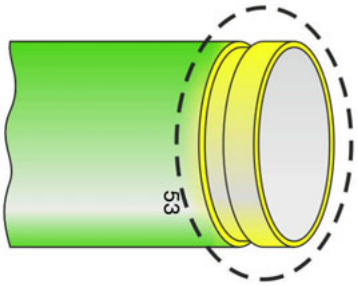	
Lubricate the seal ring lip with silicone grease. There is no need to remove the seal ring from its housing. The seal is lubricated in the factory.	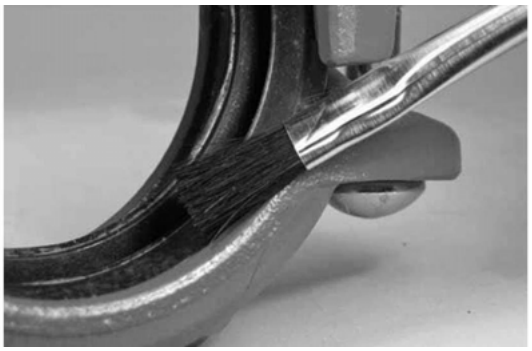	
Push the grooved ends of the elements to be connected into the coupling until they contact the central web of the seal. The groove and key must line up in this position.	 *Coupling placed on the first pipe end*	

GE Proprietary Information: CONFIDENTIAL! Use or disclosure of data contained on this sheet is subject to the restrictions on the cover or on the first page.

Assembly steps	Series 107 - rigid	Series 177 - flexible
	The second pipe end is introduced into the coupling	
	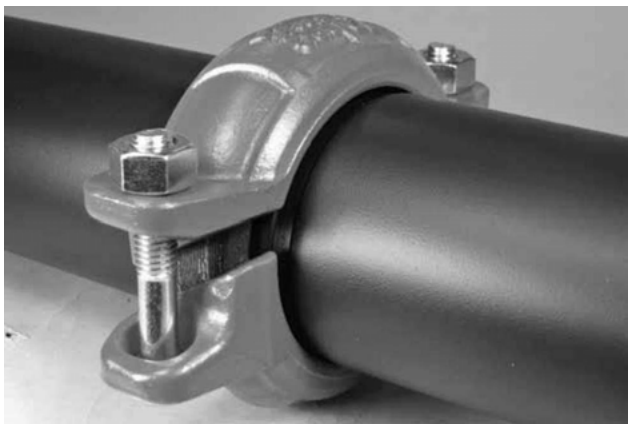 *Coupling positioned*	
Tighten the nuts evenly crosswise until the fitting surfaces are in metal-to-metal contact.		

GE Proprietary Information: CONFIDENTIAL! Use or disclosure of data contained on this sheet is subject to the restrictions on the cover or on the first page.

Assembly steps	Series 107 - rigid		Series 177 - flexible	
		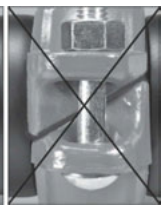	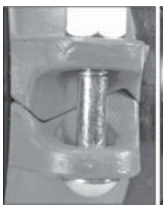	
	OK	Wrong	OK	Wrong
Visual inspection of the joint Right	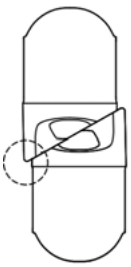	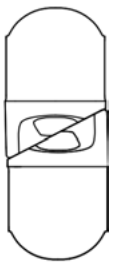	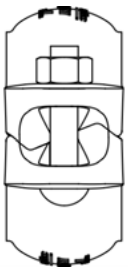	
Wrong	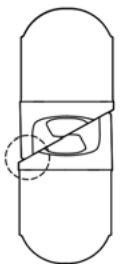		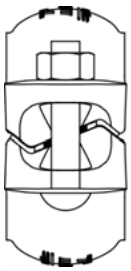	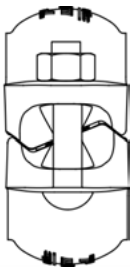

5.12 Silencer condensate drain

Tip: The condensate pipe between the silencer and/or exhaust gas heat exchanger and the condensate flange on the container roof is not numbered. This part, however, is easy to identify. The pipe is either tied to the silencer and/ or exhaust gas heat exchanger using tie wraps or it is placed in the container itself.

Example:

GE Proprietary Information: CONFIDENTIAL! Use or disclosure of data contained on this sheet is subject to the restrictions on the cover or on the first page.

5.13 Cabling

Connect all cables according to the order-specific wiring diagram and interface list.

5.14 Ventilation

Remove all plastic covers from the ventilation openings.

GE Proprietary Information: CONFIDENTIAL! Use or disclosure of data contained on this sheet is subject to the restrictions on the cover or on the first page.

5.15 gas connection

During transport, the gas connection is closed off using a blind flange. Depending on the specific application, the ball valve and the controlled gas system's filter section are supplied separately. These must be fitted to the gas flange on the outside of the container.

GE Proprietary Information: CONFIDENTIAL! Use or disclosure of data contained on this sheet is subject to the restrictions on the cover or on the first page.

5.16 Exhaust gas pipe

The complete exhaust gas pipe, including insulation, can be found inside the container. The insulation is supplied separately and is either stored in the container's engine or control room. Slide the exhaust pipe through the container roof and screw it onto the compensator. Screw the silencer onto the exhaust gas pipe flange.

GE Proprietary Information: CONFIDENTIAL! Use or disclosure of data contained on this sheet is subject to the restrictions on the cover or on the first page.

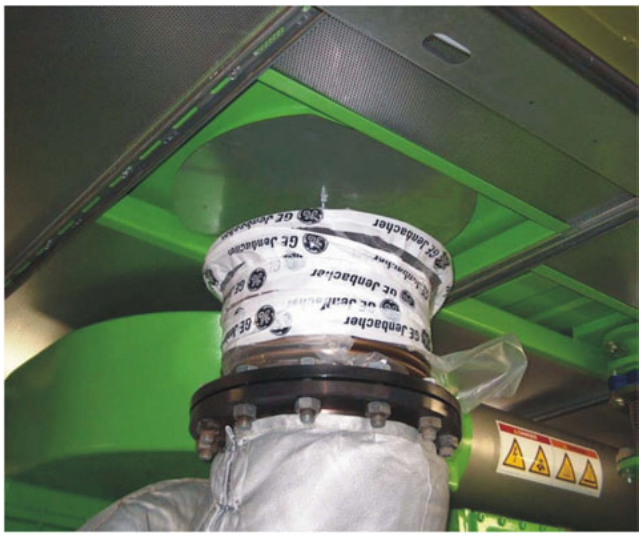

5.17 Container cable entry

The container cable entry in the control room floor must be sealed off to prevent rodents and other vermin from entering.

See also the following TIs for more specific information:
TI 1100-0110
TI 1100-0112

5.18 Transport guards

Remove all transport guards (TI 1000-0044) and straps.

GE Proprietary Information: CONFIDENTIAL! Use or disclosure of data contained on this sheet is subject to the restrictions on the cover or on the first page.

5.19 Tightening torques for metric thread (guide values)

Dimen-sion	Quality class									
	5.6		6.9		8.8		10.9		12.9	
	Nm	Lbf ft	Nm	Lbf ft	Nm	Lbf ft	Nm	Lbf ft	Nm	Lbf ft
M6	4,8	3.5	7,7	5.7	10	7.4	14	10.3	17	12.5
M8	12	8.9	19	14.0	25	18.4	35	25.8	41	30.2
M10	23	17.0	37	27.3	49	36.1	69	50.9	83	61.2
M12	40	29.5	65	47.9	86	63.4	120	88.5	145	106.9
M14	64	47.2	105	77.4	135	99.6	190	140.1	230	169.6
M16	98	72.3	155	114.3	210	154.9	295	217.6	355	261.8
M18	135	99.6	215	158.6	290	213.9	405	298.7	485	357.7
M20	190	140.1	305	225.0	410	302.4	580	427.8	690	508.9
M22	260	191.8	415	306.1	550	405.7	780	575.3	930	685.9
M24	330	243.4	530	390.9	710	523.7	1000	737.6	1200	885.1

6 Disassembly

Except for transports by sea, the I beams need never be fully disassembled. For all containers transported to the customer via rail/road, the I beams (with/without base plates) can be left fitted to the container. The only restriction being that - for unloading – a crane **complying with all the specifications** must be available! (the relevant specifications can be obtained from the party unloading the crane).

(Caution: Take note of the transport height!)

The E installation can also remain installed on the roof, provided that it is securely fitted and protected correctly. (Caution: Take note of the transport height!)

All details regarding the transport of every single order must be cleared beforehand with the Logistics Department!

(intermediate storage, transport using ferry, stacking of containers, etc. ...)

When in doubt, all roof components must be disassembled!

Caution:
The maximum transport height must never be exceeded.
In the case of standard transports with an overall height of 4m (truck and load), a max. overall container height of 2800 mm must never be exceeded!

All parts on the container roof must be securely fitted and packed and protected for transport and intermediate storage!

6.1 Disassembly for transport by sea

Mark all pipes before assembly using punch numbers.

GE Proprietary Information: CONFIDENTIAL! Use or disclosure of data contained on this sheet is subject to the restrictions on the cover or on the first page.

Mark all the beams using punched numbers as usual. Mark the exact position of the various beams using threaded plates and double-ended studs and screw these into every bore of the intermediate plates. (see picture bottom left)

Also punch the beam number into the rails just beneath the centre of the intermediate plate's notch. The correct beams and their position are now marked.

This enables easy assembly upon arrival at the customer, making sure that all original assembly positions are used.

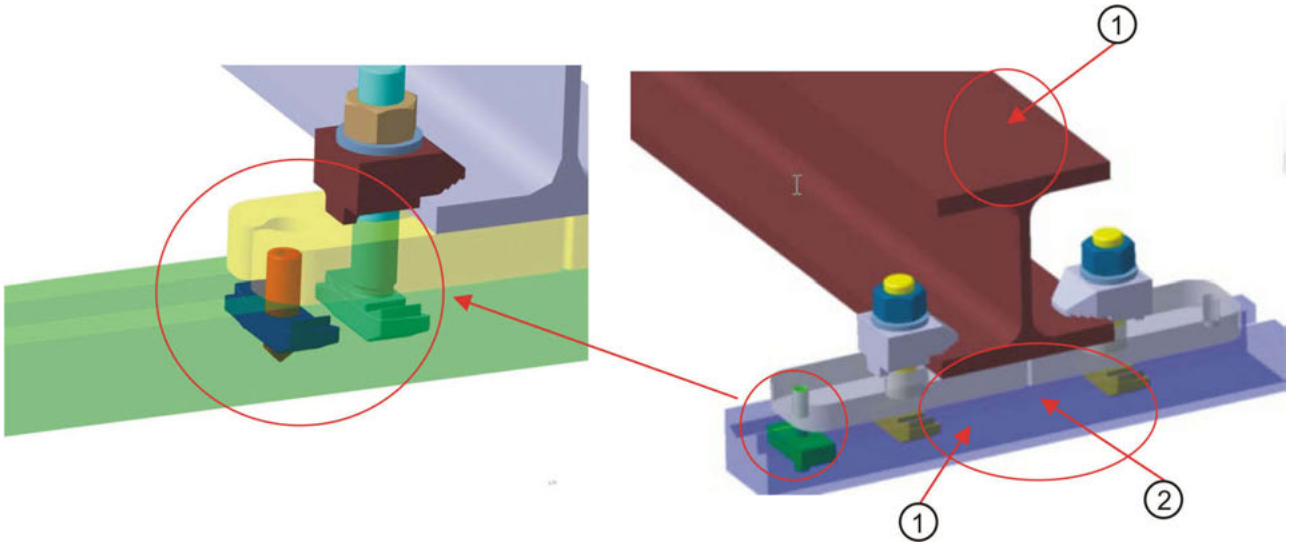

① Punch in beam number

② Intermediate plate notch

- Also mark the position of the pump console using punch numbers and a center punch. Disassemble the pump including its console and prepare it for dispatch.
- Disassemble the platen-type heat exchanger in the same way and prepare it for dispatch.
- Disassemble the entire electric installation of all roof components.
- Lift all components (without their base plates) from the roof and prepare these for dispatch.
- Prepare the various beams, with their base plates attached, for dispatch.
- Collect all small assembly parts, e.g. nuts, washers, hammer head bolts, distance pieces and clamping pieces, and prepare these for dispatch together with some spare parts.
- Having removed all components and parts, seal all container roof openings for the duration of the transport.

6.2 Disassembly for road/rail transport

Mark all pipes before assembly using punch numbers.

GE Proprietary Information: CONFIDENTIAL! Use or disclosure of data contained on this sheet is subject to the restrictions on the cover or on the first page.

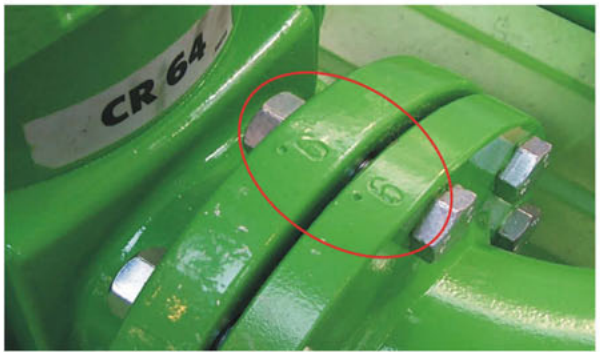

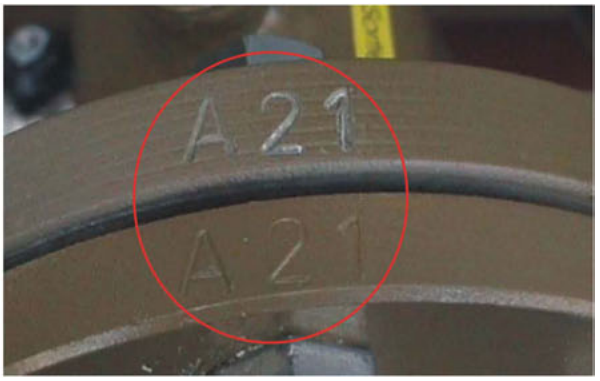

Mark all the beams using punched numbers as usual. Also punch the beam number into the rails just beneath the centre of the intermediate plate's notch.

- Disconnect the power supply to all components and protect the cable ends for transport and storage in the open air. Attach the cable ends to the I beams at a suitable point.

Caution: do not leave any loose parts lying around on the container roof!

- Also mark the position of the pump console using punch numbers and a center punch.
- Disassemble the pump including its console and prepare it for dispatch.
- Disassemble the platen-type heat exchanger in the same way and prepare it for dispatch.
- Lift all components (without their base plates) from the roof and prepare these for dispatch.
- Check whether the various I beams are securely attached to the roof rails.
- Having removed all components installed, seal all container roof openings for the duration of the transport.

Caution:
The maximum transport height must never be exceeded.
In the case of standard transports with an overall height of 4m (truck and load), a max. overall container height of 2800 mm must never be exceeded!

All parts on the container roof must be securely fitted and packed and protected for transport and storage!

6.3 Assembly at the customer's location

Caution: When working on the container you must ensure that everyone observes the relevant safety instructions and wears his personal protective equipment! When working on the roof of the container, everyone must wear fall prevention equipment! See also TI 2300-0005!

- Fit all intermediate plates and hammer head screws supplied at the locations marked according to the assembly drawing. To facilitate assembly, the hammer head screws are tilted sideways. (See initial assembly)
- Position the I beams onto the ground in accordance with their numbering and assemble all large components (e.g. table cooler and air-intake box) onto the beams.

GE Proprietary Information: CONFIDENTIAL! Use or disclosure of data contained on this sheet is subject to the restrictions on the cover or on the first page.

- Lift the components onto the container roof together with the components installed and secure these using the clamping pieces and nuts supplied.
- Optionally, lift the beams one by one into the required position on the container roof and then assemble and secure the components onto the beams.
- Assemble all pumps, platen-type heat exchangers etc. and align these so that the pipework can be attached.
- Assemble all pipes – which are marked using punch numbers - according to the assembly drawing.
- During assembly of the pipes, it is still possible to re-align the components, after which the clamping joints must be tightened and all screw connections checked.
- Connect and route the electrical components and installation according to the wiring diagram, and check every connection during commissioning.

When transporting the container by road/rail there is no need for the first three steps as the beams need not be disassembled.

GE Proprietary Information: CONFIDENTIAL! Use or disclosure of data contained on this sheet is subject to the restrictions on the cover or on the first page.

1 Application 1
2 General 1
3 Criteria for an oil approval 2
3.1 Product Specification 2
3.2 Selection of engines 2
3.3 Test duration 2
3.4 Oil condition and oil change interval 2
3.5 Examination of the engine 2
3.6 Rebrand approvals 3

1 Application

This Technical Instruction gives directions on how to carry out the lubricating oil approval procedure for GE Jenbacher gas engines on application by an external party.

It sets out all the requirements, conditions and actions necessary for the approval to be granted.

2 General

An approval procedure is usually requested by a lubricating oil manufacturer, but additive manufacturers, service partners and partnerships consisting of a number of parties can have an interest in the approval of a lubricating oil.

The party interested in the oil approval procedure is referred to below as the "supplier".

The party ultimately responsible for the engine and its operation is referred to as the "customer".

If all the requirements and conditions set out in the Technical Instruction are met and the product has passed an approval procedure, it will be included in the appropriate class in the list of recommended lubricants.

Discussions on the continued presence of the product in the list of selected oils will be held no later than 4 years after the product approval. The continued presence in the list of selected oils depends on the technical requirements of the engine, traceability of the product, constancy of the product specifications and positive field experiences.

The suitability of a lubricating oil is determined by means of a field test on a customer's engine. A field test can only be carried out with the knowledge and approval of the customer and with his support. A contract to this effect will be concluded between the supplier and the customer laying down the procedure of the field test and the responsibilities of the contracting parties.

Use of a non-approved lubricating oil is basically the responsibility of the customer. GE Jenbacher will therefore ask the supplier to guarantee in writing that they will indemnify the customer against any damage due to use of the lubricating oil. Damage due to use of the lubricating oil includes not only breakage of engine components, but also increased wear and deposits and any resulting down times, additional maintenance work and loss of profit.

Any costs incurred by GE Jenbacher in connection with the oil approval will be borne by the supplier.

GE Jenbacher reserves the right to decline or delay an oil approval procedure, despite a suitable product specification, for organisational reasons.

Technical Instructions applicable as part of an oil approval procedure:

TI 1000-0099B - analysis program and limit values for used oil

TI 1000-0099C - Testing the site-specific oil service life

TI 1000-0099D - analysis of the ipH value

GE Proprietary Information: CONFIDENTIAL! Use or disclosure of data contained on this sheet is subject to the restrictions on the cover or on the first page.

TI 1000-0300 - Fuel gas quality

TI 1000-0112 - Oil sampling

3 Criteria for an oil approval

3.1 Product Specification

Information on the product regarding the base oil, additives and properties in accordance with the "Product Specification" form (obtainable from GE Jenbacher/Technology). If the use of different production plants means that different base oils may be used in the product, the oil test must be carried out using the demonstrably worse base oil quality. GE Jenbacher are to be informed if different base oils may be used.

3.2 Selection of engines

A field test must be carried out on 2 engines in different installations for an oil approval for an engine type and fuel gas class. Discussions must always be held with GE Jenbacher before an approval test to determine which engines are appropriate for the test. If a lubricating oil is to be tested for fuel gas class B or C, the quality of the gas at the test installation must be worse but still just permissible under TI 1000-0300.

3.3 Test duration

The test duration for each engine shall be at least 6,000 operating hours. No modifications may be made to the lubricating oil during this time. The engine operating conditions must be held as constant as possible. GE Jenbacher cannot guarantee that the field test can be finished immediately after having completed the minimum operating time. Because of conflicting dates and times, during which the engine cannot be shut-down, a certain amount of delay may occur. This requires a certain amount of flexibility from the supplier.

3.4 Oil condition and oil change interval

The oil condition must be monitored and documented in accordance with TI 1000-0099B. The oil service life is determined in accordance with TI 1000-0099C. The oil consumption must be continuously ascertained and documented throughout the test. The customer and/or supplier shall be responsible for the documentation. The used oil analyses must be made available to GE Jenbacher.

Premature oil changes can falsify the findings and are therefore only allowed with the express permission of GE Jenbacher. This shall not apply to any necessary repairs which entail an oil change, or to premature oil changes due to public or staff holidays. Falsified results can lead to refusal of the approval.

3.5 Examination of the engine

An interim examination is carried out after 2,000 hours' operation, with a final examination after at least 6,000 hors. The examination will be carried out by a specialist from GE Jenbacher and must be requested from the GE Jenbacher headquarters.

The following parts must be ordered as an "oil examination package". These are the aggregate costs which include all expenditure such as materials, the examination, fitters, the examiner, travel costs, etc.

GE Proprietary Information: CONFIDENTIAL! Use or disclosure of data contained on this sheet is subject to the restrictions on the cover or on the first page.

Engine type	Part number
Type 3 engines	658916
Type 4 engine	658917
Type 6 engine	658918

The engine examination includes endoscopy of the combustion chambers, and engine dismantling. An engine examination generally requires a shutdown period of 1 to 3 days. The examination dates will be decided by agreement between GE Jenbacher, the customer and the supplier. However, GE Jenbacher cannot guarantee that a GE Jenbacher technician is available at the time requested by the customer.

The engine examination will follow guidelines laid down by GE Jenbacher.

Responsibilities and sequence of events in the oil approval procedure:

Activities	Responsibility
Request for a lubricating oil approval for a specific engine type and fuel gas class	Supplier
Announcement of the product specification	Supplier
Agreement to the requested approval procedure	GE Jenbacher / Technology
Identification of the test engines	Supplier
Agreement regarding responsibilities and sequence of events during the engine test	Supplier and customer (GE Jenbacher Review of the Agreement)
Start of the test (start both engines at the same time as near as possible)	
Order the engine examination	Supplier
Interim examination	Supplier, customer, GE Jenbacher
Final examination	Supplier, customer, GE Jenbacher
Discussion of the examination results	Supplier, GE Jenbacher
Decision on the success of the approval procedure after the final examination of the 2nd engine	GE Jenbacher

3.6 Rebrand approvals

Rebrand products are engine lubricating oils which are not being used for the first time in a GE Jenbacher product (new product), but are being used within a new business context (different supplier). The following conditions apply for including such a product in TI 1000-1109 under a new name.

- The original product must hold a GE Jenbacher approval.
- Confirmation or declaration of consent from the original manufacturer and a request by the rebrand manufacturer for a rebrand approval.
- Renewal of the confirmation or declaration of consent from the original manufacturer at 2-yearly intervals.

Responsibility for the product lies with the oil supplier.

A rebrand approval is ordered under the following part numbers:

GE Proprietary Information: CONFIDENTIAL! Use or disclosure of data contained on this sheet is subject to the restrictions on the cover or on the first page.

Engine type	part number
Type 3 engine	658974
Type 4 engine	658975
Type 6 engine	658976

GE Proprietary Information: CONFIDENTIAL! Use or disclosure of data contained on this sheet is subject to the restrictions on the cover or on the first page.

1 Tips **1**
2 Limit/alarm levels **1**
2.1 Oil condition 1
2.2 Contaminants 2
2.3 Metallic elements 3

1 Tips

Essential program for used-oil analyses on GE Jenbacher gas engines; limit and alarm levels.

Parameters and limit levels are for mineral-oil-based lubricants.

Parameters and alarm levels apply to wear and corrosion products.

These alarm levels are not applicable when bypass filters are used.

The measured value provides information on oil, gas and the engine.

To set the analysis intervals, refer to TI 1000-0099C.

2 Limit/alarm levels

2.1 Oil condition

Program point	Limit level	Guideline	Oil	Engine	Gas	Explanation
Viscosity 100°	≥ 12 ≤ 18 mm²/s and < fresh oil +3 mm²/s **≥ 16.9 mm²/s *)**	DIN 51562	x			
Base number BN	> 50% fresh oil and > 2 mg KOH/g **> 2.5 mg KOH/g *)**	DIN ISO 3771	x			
Acid number AN	Fresh oil value +2.5 mg KOH/g **Fresh oil value +3 mg KOH/g *)**	EN 12634	x			1)
ipH value	Min. 4.0 GE by Jenbacher method Min. 4.5 by Mobil method	TI 1000-0099D	x			2)
	Min. 4.5 GE by Jenbacher method Min. 5 by Mobil method					2) 3)
IR ageing	λ 5.8 µ max. 20 A/cm **max. 30 A/cm *)**	IR spectroscopy	x			
IR nitration	λ 6.1 µ max. 20 A/cm **max. 30 A/cm *)**	IR spectroscopy	x			

GE Proprietary Information: CONFIDENTIAL! Use or disclosure of data contained on this sheet is subject to the restrictions on the cover or on the first page.

***) for Mobil Pegasus 1005 only**

1. **AN (Acid Number)**

   Each lubricating oil has a characteristic fresh oil AN, caused by the product-specific reaction mechanism. It is therefore necessary to determine the fresh oil AN in order to establish the AN limit level. This must be done at regular intervals by the laboratory contracted by the customer to perform routine used-oil analyses.

2. **ipH value**

   It is essential to determine the ipH value in all cases when biogas, landfill gas and special gases are used as the fuel gas, even if the BN value is well within the limit. With these fuel gases, we cannot rule out the possibility that acids are already present before the gas is burned.

3. **Only be used for biomass fermentation and NAWARO plants (not for MBA and 1800 rpm plants), in accordance with the requirements below:**

   Gas quality:

- biogas must be of natural gas quality.
- The limit levels for "operation with catalytic converter" as specified in TI 1000-0300 must be adhered to, irrespective of whether a catalytic converter is provided.

2.2 Contaminants

Program point	Limit level	Guideline	Oil	Engine	Gas	Explanation
Na	See explanations		x	x		1)
Foreign matter	Max. 1 m	EN 12662	x			
Chlorine content	See explanation	DIN 51577			x	2)
Glycol	max. 0.02 %			x		
Water	max. 0.2 %			x		
Si	See explanation			x	x	3)

1. **Na (Sodium)**
   Sodium is an engine coolant additive. The Na content is determined in order to identify any water content which is or was present in the lubricating oil.

2. **Chlorine content**
   The chlorine content of the oil has no limit. Chlorine can be present in lubricating oil in a wide variety of compounds. Particular attention must be paid in all cases to the AN, ipH and BN values to establish whether the chlorine found causes corrosion.

   In the case of landfill gas, the chlorine content must be continuously monitored as standard procedure. In the case of biogas or special gas, the chlorine content must be determined until it has been proved that the biogas or special gas is chlorine-free for all practical purposes.

3. **Si (Silicon)**
   The silicon content of used oil has no limit. Silicon can be present in lubricating oil in a variety of forms.

- as siloxanes in the form of trace and accompanying elements in landfill and biogas installations

GE Proprietary Information: CONFIDENTIAL! Use or disclosure of data contained on this sheet is subject to the restrictions on the cover or on the first page.

- in crystalline form as dust
- in the form of silicone oil as an anti-foam agent

Siloxanes

It is possible to establish whether the silicon found will cause damage in a particular case by estimating the operational value, SiB, as described in TI 1000-0300. Any increase in wear metals such as iron, chromium and aluminium must be carefully noted.

Any rise in the silicon content of the fuel gas may produce an increase in deposits in the combustion chamber and increased wear as a result. That is why a regular check of the combustion chamber with an endoscope is recommended.

As increased silicon content can also cause additional wear on the exhaust side, greater attention must be paid to correct valve play adjustment.

Dust

If the silicon found in the oil is due to inadequate filtration of the intake air, the air filters must be checked or replaced immediately and the oil changed. If there is an increased ratio of dust in the ambient air, an additional filter must be installed.

2.3 Metallic elements

Program point	Alarm levels ppm/1000 Oh	Guideline DIN 51396/3	Oil	Engine	Gas	Explanation
Fe	Max. 20 ppm			x		1)
Pb	Max. 20 ppm			x		
Al	Max. 15 ppm			x		
Sn	Max. 5 ppm			x		
Cr	Max. 5 ppm			x		
Cu	Max. 15 ppm			x		

1. **Metallic elements**

   A key factor for analysing the wear metals is the engine-specific trend analysis. If there are any deviations from this trend or the alarm levels are reached, follow-up actions will be required in every case.

GE Proprietary Information: CONFIDENTIAL! Use or disclosure of data contained on this sheet is subject to the restrictions on the cover or on the first page.

1 Scope 1
2 Oil-change interval 1
3 Assessing the results of analyses 1
4 Procedure 1

1 Scope

GE Jenbacher gas engines:

2 Oil-change interval

2.1 The service life of a single filling of lubricating oil depends on many different factors. Next to the oil consumption of the engine, the thermal and mechanical load of the oil, the quantity of oil circulating, the quality and composition of the fuel gas, the wear on the engine, the quality of the oil used, etc. all have a significant effect on the service life of the oil.

2.2 When landfill gas is used, it must be borne in mind that, depending on the fuel-gas quality, the oil-change intervals which are to be determined analytically will be only half as long as the oil-change intervals for sweet-gas operation.

2.3 When changing oil, make sure that the oil residues in the engine are kept to a minimum, i.e. by changing the oil filters, draining the oil cooler, etc.

3 Assessing the results of analyses

An oil filling should be changed when the measured value of one single item in the analysis has reached the limit levels referred to in TI 1000-0099B, or if these limit levels are expected to be reached in the short term, at which point an oil change would not be possible for operational reasons.

The oil analysis should be kept for documentation purposes.

4 Procedure

4.1 The first step is to determine target values for a specific oil service life, which depends on

- the operating mode
- the fuel type
- the ambient conditions
- the (lubricating oil) product.

Generally this step has to be completed soon after commissioning. However, if a major change occurs some time during the service life of the engine, the above procedure has to be repeated in any case!

Before commissioning: Replace any running-in oil remaining in the engine with operating oil!

From this point onwards, used-oil samples must be taken within a period of 150 operating hours (for landfill and biogas - after 75 operating hours) (see TI 1000-0112, DIN 51574).

GE Proprietary Information: CONFIDENTIAL! Use or disclosure of data contained on this sheet is subject to the restrictions on the cover or on the first page.

When you send the first oil sample to the laboratory which is going to carry out the oil analysis, a copy of TI 1000-0099B (Limit levels for used oil for GE Jenbacher gas engines) should be enclosed. The laboratory and/or the supplier must be requested to process each oil sample immediately and comment on the analysis results in relation to the GE Jenbacher limit levels, e.g. within the limits, outside the limits, almost at the limits, etc.

Well-known lubricant suppliers are generally willing to carry out analyses of used oil samples.

In order to give a clear idea of what is going on during the service period of one oil filling every single analysis result must be charted in a graph (see the diagram below).

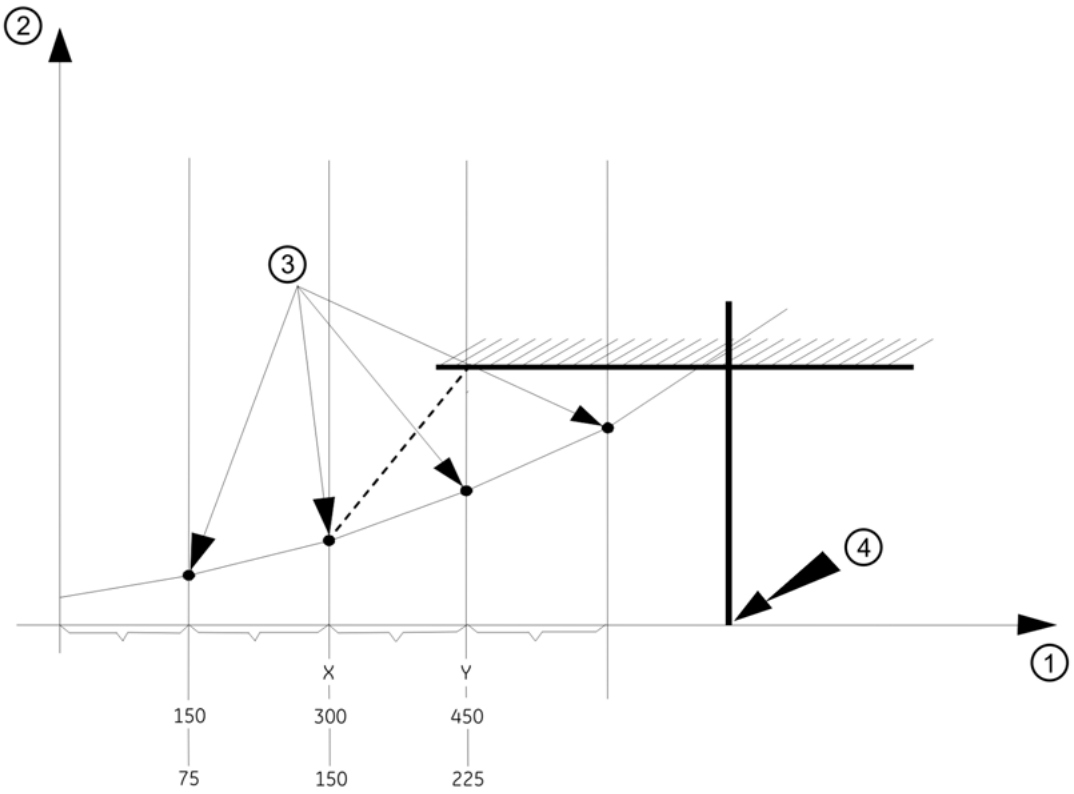

①	Service life	③	The analysis results
②	Numerical value of – in this case only one – relevant analysis result	④	Predictable end of the service life of an oil fill
	Test interval (approx. 150 Oh for natural gas and approx. 75 Oh for landfill gas and biogas)		
	Limit level as specified in TI1000-0099B		

Where - as shown in example "X" - sudden change trends are found in comparison with analyses of the previous sample, this must be considered an alarm signal, even if the limit has not yet been reached as shown in example "Y" (curve).

GE Proprietary Information: CONFIDENTIAL! Use or disclosure of data contained on this sheet is subject to the restrictions on the cover or on the first page.

This graphic representation makes it relatively easily for the operator to form a picture of what is happening to his oil and/or engine and to estimate the oil service life he can expect.

4.2 If the oil service life is not fully satisfactory, it can be prolonged by increasing the engine oil capacity by adding a supplementary tank

4.3 After tests have established the plant-specific oil service life, an analysis must be carried out for each engine in the plant at every further oil filling.

To ensure continuing analytical operational monitoring or low-risk maximisation of oil service life, it is recommended that used-oil analyses are carried out at about

- 60%
- 80% and
- 100%

of the thoroughly tested and statistically predictable oil service life.

In any case, the "unmonitored" oil service life should not exceed 500 operating hours after the first thorough test (250 operating hours for landfill gas and biogas).

This provides certainty that

- the oil-change interval determined during the first 3 oil fillings was not the result of coincidence
- no deliberate change has been made to the plant-specific conditions
- the engine is in good condition (e.g. as far as its settings or wear are concerned).

4.4 If you wish to have us comment on any analysis results, please contact:

GE Jenbacher - Customer Service

GE Proprietary Information: CONFIDENTIAL! Use or disclosure of data contained on this sheet is subject to the restrictions on the cover or on the first page.

Purpose:

To standardise the method for determining the ipH value in the individual analytical laboratories in order to ensure comparability between the individual values and with our limit level.

Method: GE Jenbacher

Reference: ASTM D 664, 7.15 - TITRATION SOLVENT

Requirement:

- Buffer parent solution A**
- Titration solvent
- pH glass electrodes manufactured by METROHM AG, HERISAU

Recipe:

Titration solvent: Toluol, water and isopropyl alcohol as described in ASTM D 664

Buffer parent solution A:**

Weigh in 24.2 +/- 0.1 g of 2, 4, 6-TRIMETHYL PYRIDINE into a 1-litre flask filled with 100 ml of isopropyl alcohol.

Add 750 +/- 5 ml of 0, 2 normal alcoholic hydrochloric acid and fill with isopropanol up to 1000 ml.

The solution can be kept for 2 weeks at room temperature and 4 weeks at approx. 8°C (refrigerator).

Procedure:

The used-oil sample is heated to 60 +/- 5°C in its original container and shaken thoroughly so that all sediments are evenly distributed throughout the used oil.

5 g of the used-oil sample is dissolved in 125 ml of the (above-mentioned) titration solvent.

The electrodes are dipped into a non-aqueous buffer solution
(= 10 ml of buffer parent solution A** and 100 ml titration solvent) in accordance with the relevant operating instructions, or are agitated in the buffer solution for approx.
5 minutes and the millivoltmeter is set to pH = 4.

The electrodes are then placed in the titration solution (see above: i.e. 5 g of used oil + 125 ml of titration solvent), agitated for approx. 5 minutes and then the initial pH value is read

Method: Mobil

Procedure:

The pH meter must be calibrated before the pH value is measured. In order to do so, aqueous buffer solutions with a pH value of 4.0 and 2.0 are measured consecutively. If the calibration is performed using two points of reference,

GE Proprietary Information: CONFIDENTIAL! Use or disclosure of data contained on this sheet is subject to the restrictions on the cover or on the first page.

the relative rate-of-rise of the measuring chain can be determined. If this determination results in a value below 95%, the set-up of the measuring instruments must be checked to ascertain the source of the problem!

To determine the pH value of a used oil sample, 3.6 g of the sample is first mixed with 90 ml of solvent. To produce one litre of solvent, 500 ml toluol, 495 ml isopropanol and 5 ml of demineralised water are mixed thoroughly. This mixture corresponds to the solvent described in ASTM D664 (Standard Test Method for Acid Number Determination)l. The degree of purity described in this standard for the chemicals used must be adhered to in each case.

Once the weighed-in oil sample has been thoroughly mixed with the solvent, the pH value can be measured without further stirring. On completion of the measurement, the electrode should be cleaned with pure i-pH solvent. Oil residues must be removed completely. During the intervals between measurements, the electrode should be stored in slightly acidified (pH 3-4) demineralised water In our experience, insufficient cleaning of the measuring electrode is the most frequent cause of faulty measurements.

GE Proprietary Information: CONFIDENTIAL! Use or disclosure of data contained on this sheet is subject to the restrictions on the cover or on the first page.

1 Tips 1
2 Used oil test result 2
2.1 Water present in oil 2
2.2 High insoluble content 3
2.3 Increased viscosity 3
2.4 Reduced viscosity/general 4
2.5 Reduced viscosity/diesel engines and hydraulically controlled two-stroke gas engines 4
2.6 Higher than normal trace metal count detected by spectro analysis or atomic absorption analysis 5
2.7 Low alkaline reserve 6
2.8 Infrared analysis (gas engines) shows increased absorption at 5.8 µm (1,710 Hz) 6
2.9 Infrared analysis (gas engines) shows increased absorption at 6.1 µm (1,630 Hz) 7
3 Overview of factors affecting engine oil condition 7
4 Overview of natural oil ageing, which occasionally proceeds too rapidly due to overloading 8
5 Additional evaluation of the concentration of harmful substances in fuel gases by means of regular lube oil analyses 9
5.1 Requirement 9
5.2 Procedure 9
5.3 Rating 9

1 Tips

For limit levels of lubricating oils, please refer to TI 1000-0099B, TI 1000-0099C and TI 1000-0099D.

It is quite normal for the properties of lubricating oil to change (through ageing or depletion) in the course of operation. Where the lubricating oil is ageing at a steady rate, but unusually quickly, this often means that the additive package is unsuitable for the operational requirements (e.g. fuel, mode of running, etc.) or that the engine is malfunctioning e.g. because of an incorrect setting.

Where the lubricating oil becomes depleted all at once, this often indicates a sudden change in the engine operating mode (e.g. engine damage, change of fuel type/quality, harmful substances in the environment, etc.).

Very often there is an interaction between excessive oil ageing and an unnoticed change in the engine condition. This means that excessively aged oil causes engine damage and engine damage places greater demands on the oil.

GE Proprietary Information: CONFIDENTIAL! Use or disclosure of data contained on this sheet is subject to the restrictions on the cover or on the first page.

2 Used oil test result

2.1 Water present in oil

Primary cause	Specific factors	Engine and oil conditions responsible
Condensation	Low-temperature operation	Stop-go operation. Low coolant temperature. Excessive engine idling.
	Flow-back of condensate from crankcase breather	Inadequate crankcase ventilation. Weather-related condensation in the crankcase ventilation pipe combined with an unfavourable pipe layout which allows condensate to run back into the engine.
Coolant leakage	Cylinder head gasket leaky (water passage)	Gasket defective or burnt through, or gasket incorrectly installed.
	Leaky O-rings on wet cylinder liners	Incorrect installation. Defective O-ring. Seating surface corroded.
	Engine block, cylinder head or water-cooled exhaust manifold often leaky, as well as waste heat boiler	Coolant frozen. Overheating during operation, or lack of coolant in cooling system.
High blow-by	Piston ring area	Worn piston rings or cylinder liners. Stuck or broken rings.
	Choking in exhaust system	Blockages in exhaust manifold, exhaust pipe, silencer, turbocharger or waste heat boiler.
Faulty cleaning	Machine not cleaned properly	For example, washing with water can allow water into the lube oil system.
Improper oil storage	System topped up with oil that contains water	Oil drums (even originally sealed ones) are left out in the rain.
Ingress of rainwater	Ingress via end of exhaust pipe when engine at a standstill	Extreme weather conditions, poor layout of exhaust system.
Ingress of water via fuel supply	Not only atomised condensate in fuel gas supply	Biologically or pyrolitically produced gases have not been allowed to dry properly

GE Proprietary Information: CONFIDENTIAL! Use or disclosure of data contained on this sheet is subject to the restrictions on the cover or on the first page.

2.2 High insoluble content

Primary cause	Specific factors	Engine and oil conditions responsible
Fuel soot or fuel additives	Rich operation	Overgreasing, restricted air intake.
	Worn piston rings or cylinder liners	Poor mechanical condition of engine or of shaft sealing ring on turbocharger.
Fuel soot	Defective injectors	Poor spray pattern. Dripping nozzles. Delivery starts too soon (i.e. so-called "spraying beyond the piston edge" while exhaust gas is noticeably soot-free).
Oil breaking down	Operating temperature too high	Operating too long at maximum power. Engine settings incorrect or engine in poor mechanical condition or exhaust gas entering the oil system via the turbocharger. Oil cooler blocked with sludge.
	Oil change intervals beyond permissible limit	Improper preventive maintenance practices.
	Different brands of oil mixed	High crankcase oil level. Worn bearings, guides and rings
Dirt and dust	Inadequate air filter maintenance	Improper or poor preventive maintenance practices.
	Air leaks in intake system	Poor mechanical condition.
Metal engine parts	Wear, corrosion or failed or damaged parts	Refer to notes in section 2.6.
Lack of air in diesel engine	Choking on intake side, leaks on boost pressure side	Intake air filter dirty, turbocharger defective, boost air cooler dirty. Leaks in intake or exhaust system between engine and turbocharger.
Combustion failure in diesel engines	Poor combustion	Insufficient cooling of boost air, fault in injection system (e.g. concerning start of fuel delivery or equalisation of pumps).

2.3 Increased viscosity

Primary cause	Specific factors	Engine and oil conditions responsible
Fouling,	Fuel soot	Refer to notes in section 2.2 (fuel soot or fuel additives).
	Water	Refer to notes in section 2.1.

GE Proprietary Information: CONFIDENTIAL! Use or disclosure of data contained on this sheet is subject to the restrictions on the cover or on the first page.

Primary cause	Specific factors	Engine and oil conditions responsible
Oxidation and/or nitration	Operating temperature too high	All engines: Oil change intervals often excessive, inadequate cooling, operating too long at maximum power. Gas engines: Fuel gas mixture too lean. Ignition point setting too early.
Higher-viscosity oil used	Wrong oil used	Wrong product used for first fill or top-up. Lube oil instructions not followed. "Viscosity improver" additives used.

2.4 Reduced viscosity/general

Primary cause	Specific factors	Engine and oil conditions responsible
Lower-viscosity oil used	Wrong oil used	Wrong product used for first fill or top-up. Lube oil instructions not followed.

2.5 Reduced viscosity/diesel engines and hydraulically controlled two-stroke gas engines

Primary cause	Specific factors	Engine and oil conditions responsible
Fuel dilution	Fuel injection too rich	Oversize injectors. Dripping nozzles. Blockage in the fuel return line or leakage oil line.
	Poor combustion	Piston rings broken or seized. Dripping injection nozzles. Poor spray pattern. Worn piston rings or cylinder liners. Constriction of air supply or exhaust line
	Cracked or broken connections in fuel lines	Relates to machines (engines) with fuel lines routed on inside. Lines kinked due to inattention.
	Unsuccessful starting attempts	All reasons for false starts.
	Internal leakage in injection or feed pumps	Plunger wear or defective sealing elements allow fuel to enter the pump or engine oil space

GE Proprietary Information: CONFIDENTIAL! Use or disclosure of data contained on this sheet is subject to the restrictions on the cover or on the first page.

2.6 Higher than normal trace metal count detected by spectro analysis or atomic absorption analysis

Primary cause	Specific factors	Engine and oil conditions responsible
External contamination, coolant. Engine metals due to abrasion and corrosion	Metals found in used engine oil	Source of metals in used engine oil.
	Aluminium *)	Piston, bearings and cylinder liners: dirt and dust contamination
	Barium	Oil additives, diesel fuel additives.
	Boron *)	Cooling water conditioners.
	Calcium	Oil additives (primary). Dirt and dust contamination (secondary).
	Chromium *)	Piston rings, cylinder liners, plated rocker arms, inlet and exhaust valves or crankshaft. Cooling water conditioners.
	Chlorine *) (i.e. all four halogens)	Unauthorised addition to fuel or combustion air. Important, because it has an extremely detrimental effect on the alkalinity of the oil but it cannot always be recognised as described in section 2.7.
	Copper *)	Bearings, bushings, joint rings, air filter mesh, oil cooling tubes.
	Iron *)	Engine parts.
	Lead *)	Abrasions from bearing running-in layers,
	Magnesium	Oil additives (primary). Sea-water contamination (secondary).
	Phosphorus	Oil additives.
	Silicon *)	Contamination caused by sand and dust or as a result of organic silicon compounds in landfill and sewage gases. Wear and tear of aluminium engine parts (secondary) or due to previous machine maintenance work which included abrading or honing operations.
	Sodium *)	Contamination due to use of non-distilled (or non-condensed) water, cooling water conditioners, contamination due to dust.

GE Proprietary Information: CONFIDENTIAL! Use or disclosure of data contained on this sheet is subject to the restrictions on the cover or on the first page.

Primary cause	Specific factors	Engine and oil conditions responsible
	Tin *)	Tin-plated bearings.
	Zinc	Oil additives (primary), bearings (secondary).

*) Refers to metals which must be carefully monitored when sampling and/or changing oil.

2.7 Low alkaline reserve

Primary cause	Specific factors	Engine and oil conditions responsible
Contamination by combustion acids	High-sulphur fuel	Oil's TBN not high enough. Over-extended oil change intervals.
	Excessive blow-by (nitrate development)	Poor combustion due to incorrect settings or defective parts. Poor mechanical condition of engine.
	Acid-forming vapours drawn in with intake air	Refrigerants such as Freon or NH3.
Oil oxidation	Excessive operating temperature	Operating at excessive peak load. Poor mechanical condition of engine. Poor engine settings.
Faulty oil purification	Excessive oil residues in oil filter, oil pan, oil cooler, etc. during oil change	Strong acids not removed. Cleaning intervals not adhered to.

2.8 Infrared analysis (gas engines) shows increased absorption at 5.8 µm (1,710 Hz)

Primary cause	Specific factors	Engine and oil conditions responsible
Oil oxidation	Excessive operating temperatures	High piston and cylinder temperatures. High fuel oil temperatures and engine hot spots. Refer also to comments in section 2.7 (Oil oxidation).

GE Proprietary Information: CONFIDENTIAL! Use or disclosure of data contained on this sheet is subject to the restrictions on the cover or on the first page.

2.9 Infrared analysis (gas engines) shows increased absorption at 6.1 µm (1,630 Hz)

Primary cause	Specific factors	Engine and oil conditions responsible
Nitrogen fixation (Nitration)	Poor combustion	Inappropriate and/or poor operating practices, such as: poor combustion, engine overload, faulty crankcase ventilation, defective ignition timing, excessive blow-by (piston, cylinder). Refer also to comments in section 2.7 (Excessive blow-by (nitrate development)).

3 Overview of factors affecting engine oil condition

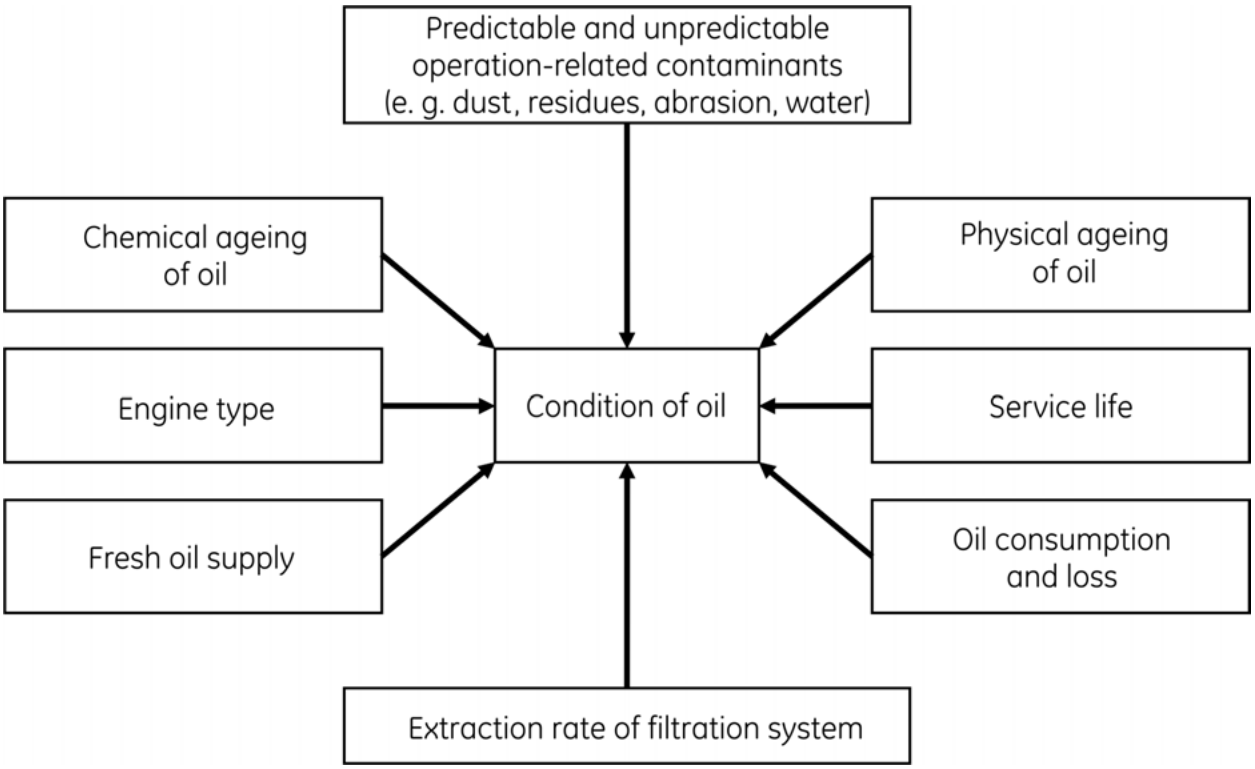

GE Proprietary Information: CONFIDENTIAL! Use or disclosure of data contained on this sheet is subject to the restrictions on the cover or on the first page.

4 Overview of natural oil ageing, which occasionally proceeds too rapidly due to overloading

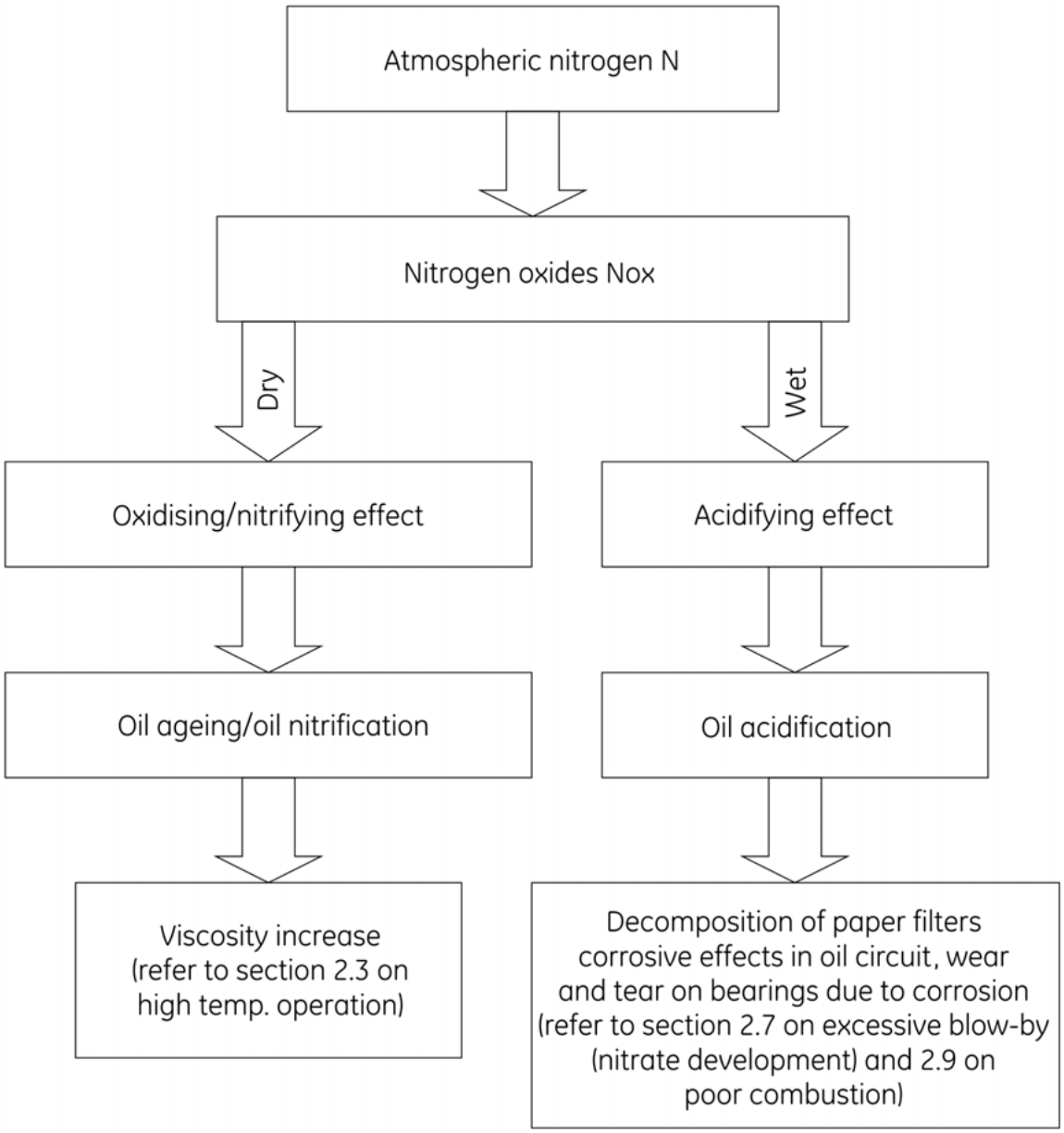

GE Proprietary Information: CONFIDENTIAL! Use or disclosure of data contained on this sheet is subject to the restrictions on the cover or on the first page.

5 Additional evaluation of the concentration of harmful substances in fuel gases by means of regular lube oil analyses

5.1 Requirement

- Use of lube oil in accordance with specifications (refer to the relevant Technical Instruction)
- Adherence to all characteristic values and limits which indicate the chemical ageing of used oil (ipH, TBN, IR 5,8 my, IR 6,1 my, etc.)

5.2 Procedure

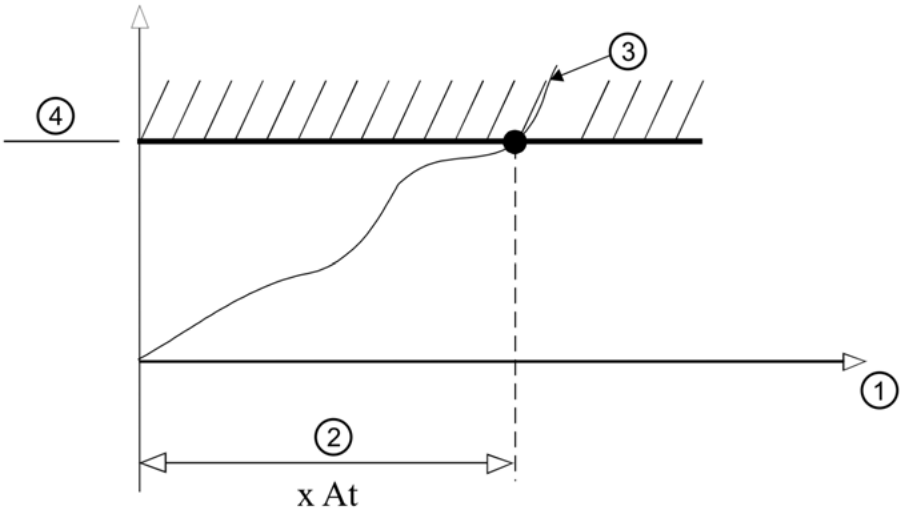

①	Oil service life (Oh)	③	Developing a parameter
②	Time gap	④	NN parameter
	Limit as per TI 1000-0099B		

5.3 Rating

shortest period found

More than 300 Oh.....	Oil change is still effective; there is not much risk that the engine will be damaged by harmful substances	Caution
200 to 300 Oh...	The harmful substances are still (at least to a certain extent) neutralised by an oil change	State of alarm
Less than 200 Oh.....	The harmful substances can no longer be neutralised by an oil change	Maximum state of alarm

GE Proprietary Information: CONFIDENTIAL! Use or disclosure of data contained on this sheet is subject to the restrictions on the cover or on the first page.

1 **Scope** 1
2 **Analysis kits** 1
3 **Oil change interval** 2
4 **Procedure for taking oil samples** 2
4.1 General instructions: 2
4.2 Taking oil samples with the engine running 2
4.3 Taking oil samples with the engine at a standstill 5
5 **Operator's obligation** 5
6 **Completing the sample report sheet** 5
7 **Registering plants and engines** 6
8 **Appendix:** 10

1 Scope

This instruction is intended for Jenbacher stationary engines.

Depending on the engine type and condition of use that can be expected, GE Jenbacher operating instructions will include any lubricating-oil instructions provided for that particular use.

These lubricating-oil instructions are mandatory.

Refer to the TIs listed below:

TI No.: 1000-0099B	**Scope of analysis and limiting values for used oil analyses**
TI No.: 1000-0099C	**Testing the site-specific oil service life**
TI No.: 1000-0099K	**Aid to interpreting used oil analyses of engine lubricants**
DIN 51574	**Sampling of lubricating oils from internal combustion engines**

2 Analysis kits

The starter pack contains:

part number	Description
510132	Hard plastic case with 20 sample containers, including sample labels and mailing pouches
506605	30m sampling hose
506606	Sampling pump

Refill packs can be ordered from GE Jenbacher quoting the following part numbers:

part number	Description
506605	30m sampling hose
506606	Sampling pump
506602	Refill pack with 5 sample containers
506603	Refill pack with 10 sample containers
506604	Refill pack with 20 sample containers

GE Proprietary Information: CONFIDENTIAL! Use or disclosure of data contained on this sheet is subject to the restrictions on the cover or on the first page.

3 Oil change interval

The possible operating conditions (e.g. load spectrum and fuel quality) and the performance standards of the different permissible oil types are so many and varied that GE Jenbacher purposely does not specify an oil change schedule.

If, when discussing the matter, a GE Jenbacher employee mentions an oil change interval, this will be either

an **actual number of hours** relating to the case in question

or

an **anticipated number of hours** given without obligation.

It will never be a mandatory **scheduled oil change interval**.

GE Jenbacher mandatory instructions are that the oil is to be changed at variable intervals in accordance with known limit values based on used-oil analyses.

If for specific organisational reasons an operator cannot have **"too variable"** oil change intervals, he will still be obliged to perform systematic used-oil analyses on a recurring basis but he can organise the timing of oil changes by carrying out early changes on oil fills which are still usable.

4 Procedure for taking oil samples

4.1 General instructions:

- Oil samples should never be filled into containers of any kind as both the material of which the container is made and residues of its previous contents may result in an incorrect diagnosis.
- Oil samples must be taken when the when the engine is running completely normally.
- Taking oil samples when the engine is at standstill is only allowed when the engine has not been provided with an oil sampling location.
- Only up-to-the-minute oil analyses can help to prevent problems. It is therefore recommended that oil samples be despatched by express mail. The Spectro/Jet-Care laboratory guarantees to complete the analysis, prepare the analysis report and send the report to a specified e-mail address within 48 hours of receipt of the oil sample.

4.2 Taking oil samples with the engine running

Tip: to obtain a representative oil sample, ~ 0.3 litre of oil must be drawn off before the actual sample is taken.

GE Proprietary Information: CONFIDENTIAL! Use or disclosure of data contained on this sheet is subject to the restrictions on the cover or on the first page.

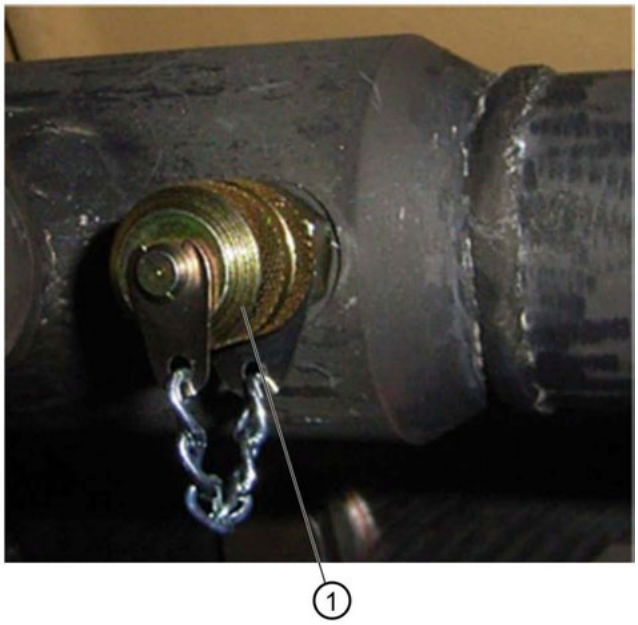

① threaded joint

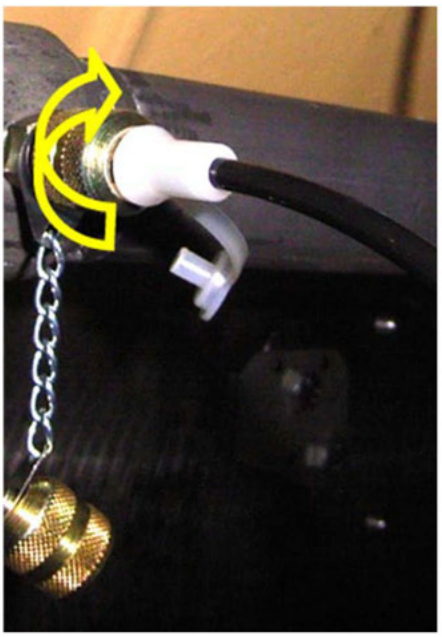

Taking oil samples by screwing the sampling line into the threaded joint (TI no. 460134)

GE Proprietary Information: CONFIDENTIAL! Use or disclosure of data contained on this sheet is subject to the restrictions on the cover or on the first page.

Taking oil samples from Mechanical Drive with threaded joint in pressure oil line upstream of oil filter.

Taking oil samples from type 2 and 3 engines with threaded joint in pressure oil line upstream of oil filter.

Taking oil samples from a type 4 engine with threaded joint in pressure oil line upstream of oil filter.

GE Proprietary Information: CONFIDENTIAL! Use or disclosure of data contained on this sheet is subject to the restrictions on the cover or on the first page.

Taking oil samples from a type 6 engine with threaded joint in pressure oil line upstream of oil filter.

Taking oil samples on the 624 TSTC at the oil sampling cock at the lowest point in the pressure oil line.

4.3 Taking oil samples with the engine at a standstill

When the engine is at a standstill the oil sample is taken using a clean hose inserted into the dip stick opening.

Tip: the hose must not be longer than the dip stick to ensure that the sample is not adulterated by sludge and sediment.

If a hose section is re-used, the hose must be flushed by being pumped through 3 times.

5 Operator's obligation

Generally, oil analysis reports reflect a condition that no longer exists when the report becomes available. The operator therefore has to decide on the basis of a trend assessment of the individual analysis reports when a particular filling of oil should be replaced without the limit levels referred to in TI 1000-0099B **actually** being exceeded.

6 Completing the sample report sheet

Only sample report sheets completed correctly and in full will ensure that the analysis is clearly allocated to the right engine.

The following is mandatory information to be included on the sample report sheet:

Dates	Remark	Where to find
Site name	Project name, address	Supplied by the operator
Engine number	7-digit number	On the system type plate – see appendix. The system type plate is located on the frame of the module.
UZ number (design number, ID number	J XXXX	On the cover sheet of the site documentation – see appendix.
Customer ID number		Supplied by the customer

GE Proprietary Information: CONFIDENTIAL! Use or disclosure of data contained on this sheet is subject to the restrictions on the cover or on the first page.

Dates	Remark	Where to find
Module type	JMS XXX GS – X.X	On the system type plate – see appendix. The system type plate is located on the frame of the module.
Engine operating hours	Total operating hours since commissioning	On the DIA.NE display
Operating hours since last oil change		Must be recorded in operational data sheet E0101 – refer to maintenance manual for site concerned.
Brand of lubricating oil	Consists of the name of the oil manufacturer and the name of the specific product, e.g. Mobil Pegasus 705	Oil drum
Oil capacity	Total quantity of oil available for engine lubrication. Oil capacity = capacity of oil pan + capacity of oil cooler + capacity of additional tank (if any)	In the engine documentation
Top up since last oil change		In operator's own records
Sample date		

7 Registering plants and engines

It is essential to register plants and engines for used oil analyses, preferably at the time of commissioning the engines. The procedure is necessary so that the laboratory can allocate the sample to the correct system.

Below, how to register with Spectro/Jetcare:

Step 1:

After opening Internet Explorer, go to the Spectro or (North America) Jet-Care address http://www.spectro-oil.com/gej or http://www.jet-care.com/gej. The first page of our used oil analysis website will appear.

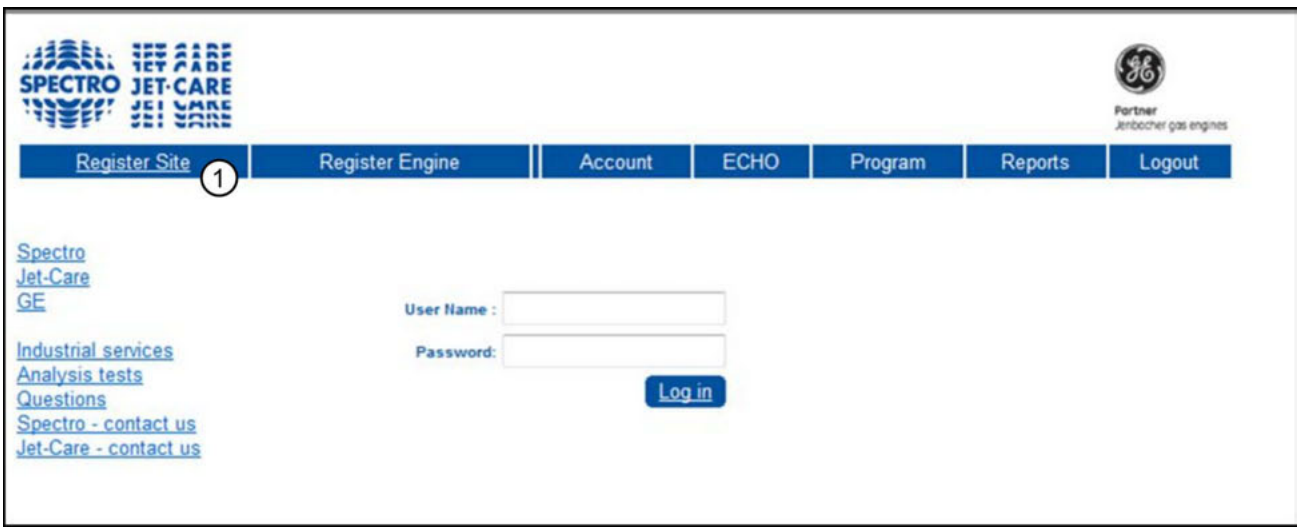

1	Click on "Register Site".

GE Proprietary Information: CONFIDENTIAL! Use or disclosure of data contained on this sheet is subject to the restrictions on the cover or on the first page.

Step 2:

Registering the plant:

①	Submit button

GE Proprietary Information: CONFIDENTIAL! Use or disclosure of data contained on this sheet is subject to the restrictions on the cover or on the first page.

This page asks you to enter the plant address and the address where the analysis reports are to be sent. After this data has been received, a password is generated and sent back to the first e-mail address (Report E-Mail 1). The password will ensure complete access and allow engine data to be entered.

Reports can be sent either as .pdf files or as "ECHOTM" data files. "ECHOTM" data files can be read with the ECHOTM program, which can be downloaded from this website under "Program". "Reporting method" can be either by E-mail or by downloading the password-protected data.

Fill in all the data and click on **"Submit"**.

Step 3:

After receipt of this, a username and password will be generated and sent to "Report E-mail 1". Enter this data on the start page and click "Log in".

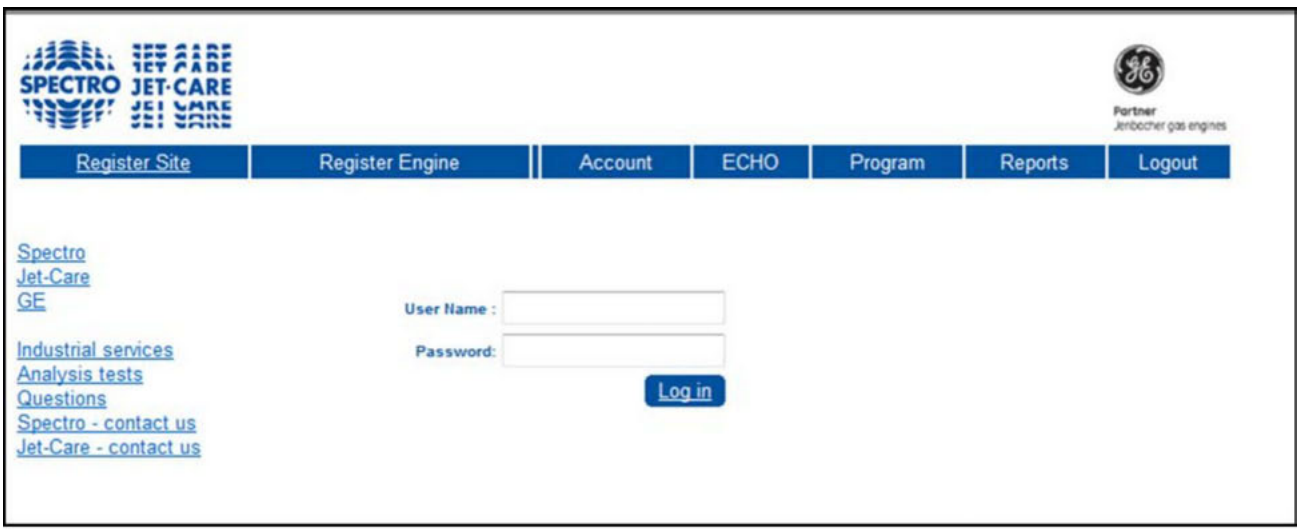

Step 4:

The next page that appears gives complete access to the database and in particular allows the engines of the plant for which the password was generated to be registered .

Click **"Register Engine"**.

GE Proprietary Information: CONFIDENTIAL! Use or disclosure of data contained on this sheet is subject to the restrictions on the cover or on the first page.

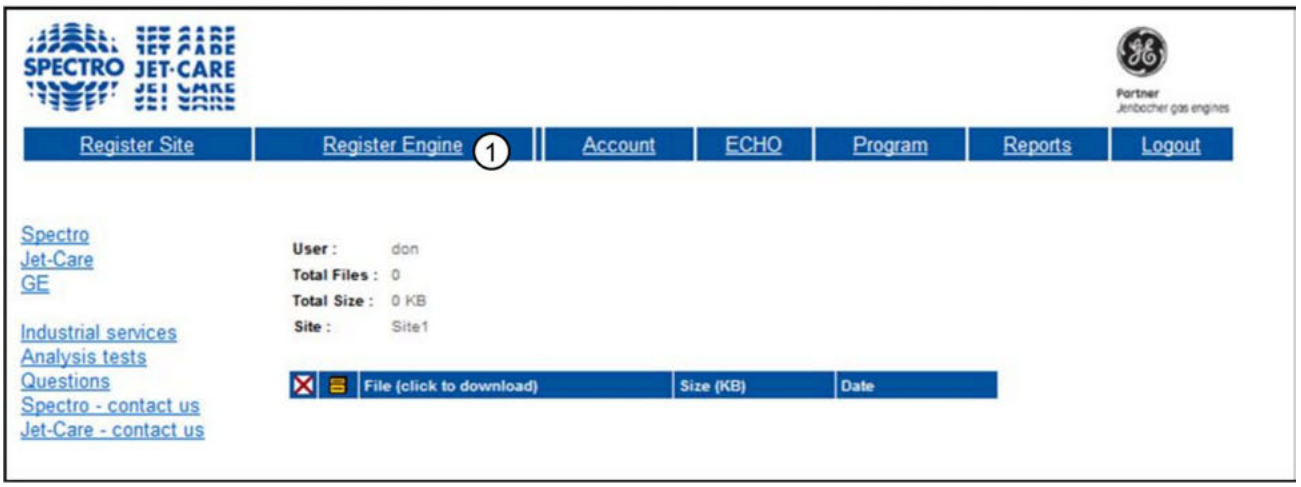

①	Register Engine

Step 5:

The registration form must be completed in full for each engine at the plant. After filling in the data for the first engine, press **"Submit"** and confirmation will appear for the first engine. The remaining engines at the plant can now be registered, pressing "Submit" after each engine until all of them have been registered. After that the samples can be sent off, properly labelled.

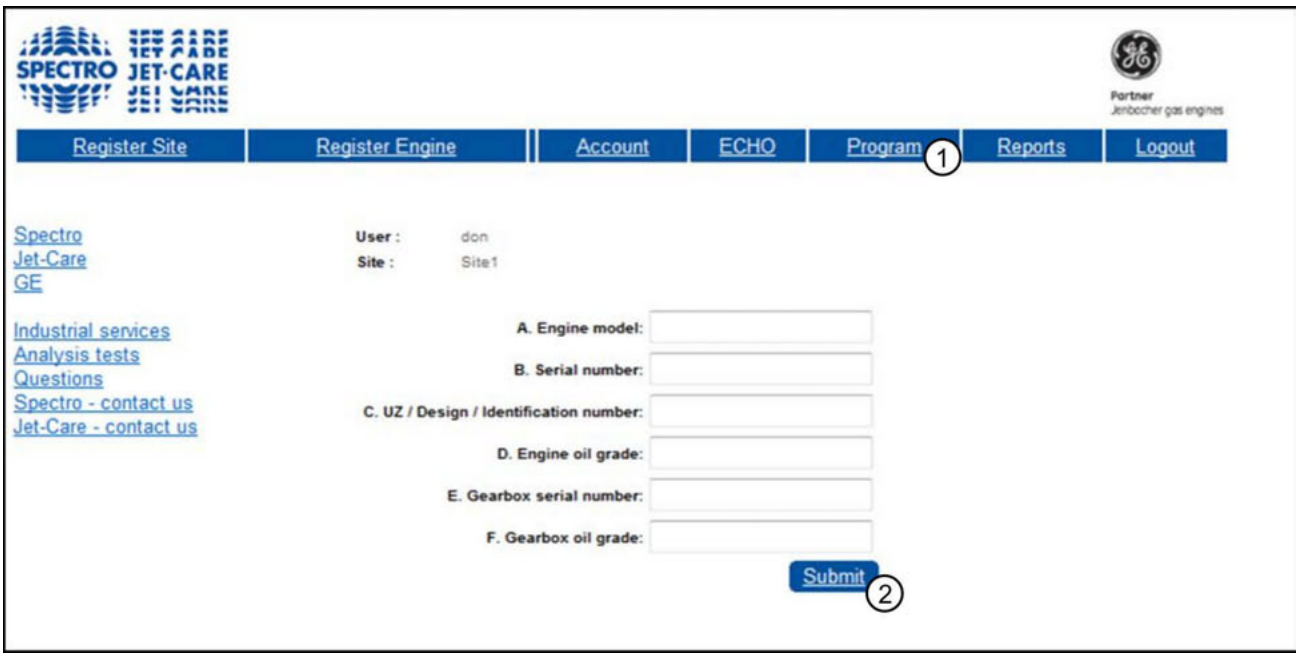

1	Program button
2	Submit button

GE Proprietary Information: CONFIDENTIAL! Use or disclosure of data contained on this sheet is subject to the restrictions on the cover or on the first page.

Instructions on using the "ECHO Reporting Program" can be found in the menu bar under **"Program"** as a .pdf file entitled "How to use the Echo reporting program.pdf".

8 Appendix:

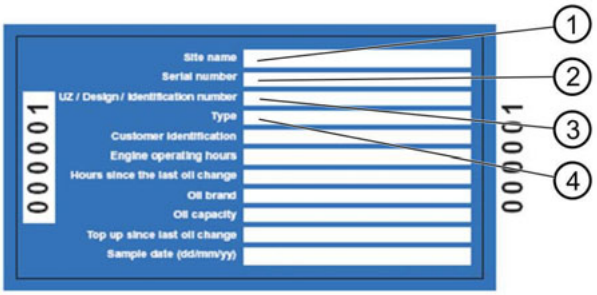

Sample report sheet

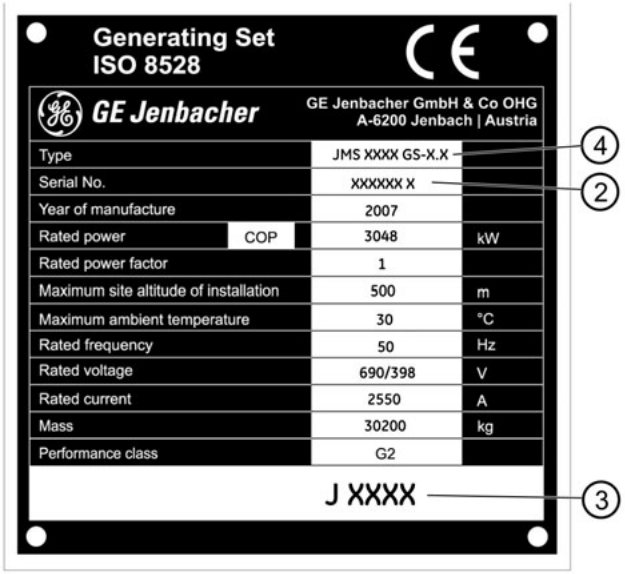

System type plate

Engine description cover sheet

① Plant name
② Engine number

GE Proprietary Information: CONFIDENTIAL! Use or disclosure of data contained on this sheet is subject to the restrictions on the cover or on the first page.

③ UZ number (design number, ID number
④ Module type

SPECTRO
Palace Gate
Odiham
Hampshire
RG29 1NP, UK

SPECTRO
Rinaustrasse 452
4303 Kaiseraugst
Switzerland

JET-CARE
3 Saddle Road
Cedar Knolls
NJ 07927
USA

GE Proprietary Information: CONFIDENTIAL! Use or disclosure of data contained on this sheet is subject to the restrictions on the cover or on the first page.

1 Scope 1
2 Cooling-water quality 1
3 Important 1
4 Water analysis 1

1 Scope

This technical instruction applies to all water-cooled engines, compressors and plants in closed primary circuits.

It does not apply to heating circuits! (Refer to TI 1000-0206).

2 Cooling-water quality

Appearance		**Clear and odourless, no sediment or suspended matter**
pH value at 25°C		7.5 to 9
Electr. conductivity (at 25°C)	µS/cm	< 600
Total hardness	°dH	6 to 12
Alkaline earths Ca^{2+}, Mg^{2+}	mmol/l	1.1 to 2.2
Sulphate SO_4^{2-}	mg/l	< 50
Chlorides Cl^-	mg/l	< 50

3 Important

3.1 Soft water (e.g. rainwater, distilled water, condensates) as well as brackish and sea water are not suitable for use as cooling water.

3.2 If there is a risk of frost, use an anti-freeze as specified in TI 1000-0201.

Any device installed to preheat the cooling water is no substitute for the anti-freeze.

If no anti-freeze is required, an anti-corrosion product as specified in

TI 1000-0204 must be added.

3.3 You should always check the cooling water quality after topping up with larger quantities of make-up water, and in any case at least once a year using a water-analysis procedure.

3.4 If water conforming to the specifications in the table (Section 2) is not available, the customer must arrange appropriate water treatment through a specialist firm. In this case, the customer and his sub-contractor will assume responsibility for the operation of the cooling water circuit.

4 Water analysis

Always take the following points into account when performing water analyses:

4.1 Sampling should be done properly, as the analysis results can be easily distorted.

GE Proprietary Information: CONFIDENTIAL! Use or disclosure of data contained on this sheet is subject to the restrictions on the cover or on the first page.

Always use clean glass or plastic sample containers.

Always rinse the sample containers thoroughly (3 to 5 times) with the water to be tested before taking the actual sample. Where water temperatures exceed 25°C, you must take the sample via a cooler which cools the water to be analysed to a temperature of 25°C.

4.2 You should determine the temperature, pH value, oxygen or carbon dioxide content immediately after the sample is taken on site.

4.3 You must carry out the analytical tests in accordance with the analysis instructions for the water quality concerned.

4.4 You must exercise great care and be very precise when carrying out the water analysis.

Because of the minute quantities of substances in the water, with an order of magnitude of less than 0.1% and in some cases even less than 0.01%, a water analysis is similar to a chemical trace analysis and therefore requires very sensitive detection methods.

4.5 Always use uniform units of measure to indicate the concentrations of substances in the water.

The most common units are "mg/l" or "g/l" or "µg/l".

Sometimes "mol/m³" or "val/kg" are also used.

4.6 A one-off water analysis will never guarantee the actual quality of the water present in the systems over a prolonged period of time. You should therefore always use average analysis results to assess the water quality.

GE Proprietary Information: CONFIDENTIAL! Use or disclosure of data contained on this sheet is subject to the restrictions on the cover or on the first page.

1 General 1
2 Tips 1

1 General

To prevent the cooling water from freezing, anti-freeze agents are added. These agents are water-soluble fluids, commonly glycol-based (e.g. ethylene glycol), with anti-corrosion and anti-foaming additives. The actual solidification point depends on the mixture ratio with the water – see the diagram.

You should only use products not mentioned by name if they are high-grade branded products and the manufacturer is liable for any side-effects these products might have.

This product liability is also required for any products mentioned by name.

2 Tips

Always rinse the entire cooling system thoroughly with water and check the system for any leaks before filling up with the anti-freeze agent.

Pour the required amount of anti-freeze agent into the cooling system and top up the system with clean fresh water, as described in TI 1000-0200.

Run the engine for 30 minutes after filling.

Always bleed the cooling system because corrosion may form in spots where air has collected.

A concentration which is too low not only has insufficient anti-freeze characteristics but the cooling agent (if, for example, diluted to below 20% by volume) may be more susceptible to corrosion than the cooling water itself!

Company	Product
ARTECO	Havoline XLC 40/60
BASF	Glysantin Protect Plus
Chemische Werke Hüls. AG.	Hüls 80
BP	BP - Anti Frost
ESSO	ESSO KÜHLERFROSTSCHUTZ (RADIATOR ANTIFREEZE)
Hoechst	Genantin
MOBIL	Frostschutz (Antifreeze) 600
Shell	Glycoshell 400
OMV	Radiator antifreeze
IP	IP Antifreeze

MANDATORY DISPOSAL!

GE Proprietary Information: CONFIDENTIAL! Use or disclosure of data contained on this sheet is subject to the restrictions on the cover or on the first page.

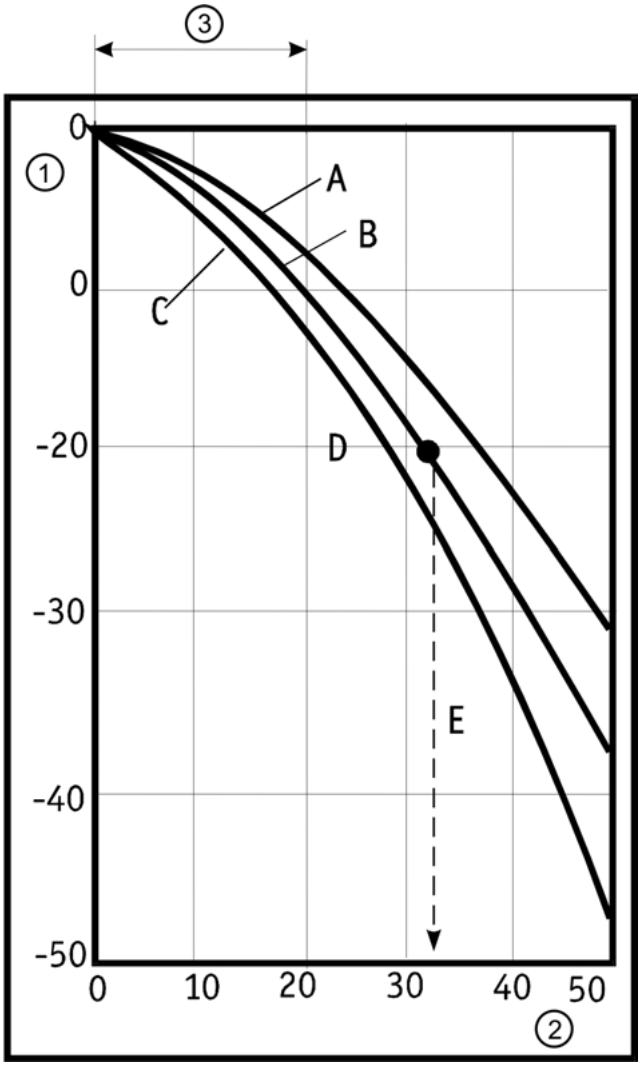

① Temperature °C
② Concentration %
③ Forbidden zone

A = first ice crystals
B = thinly liquid crystal paste
C = no longer fluid (known as the solidification point)
D = anti-freeze protection to a temperature of -20°C
E = approx. 34 volume % anti-freeze agent

MANDATORY DISPOSAL!

GE Proprietary Information: CONFIDENTIAL! Use or disclosure of data contained on this sheet is subject to the restrictions on the cover or on the first page.

1 Scope 1
2 Application 1
3 Concentration 1
4 Effect 1
5 Compatibility 1
6 Selection overview 1

1 Scope

For all water-cooled GE Jenbacher gas engines with engine and/or boost air cooling water circuit

2 Application

As per specific description of product on original container.

3 Concentration

Determining the concentration:

TI 1000-0201	by means of a prisma-refractometer (available from authorised dealers) *)
DREW	by means of Maxigard standard ampule **)

*) at least 20 % in water

**) 1.6% in water

4 Effect

Equally suitable for ferrous, aluminium and non-ferrous materials.

5 Compatibility

Compatible with all gasket and elastomer materials used in a GE Jenbacher engine.

6 Selection overview

Products referred to in TI 1000-0201	Anti-freeze with anti-corrosion additive *)
DREW AMEROID	Maxigard **)

*) This is also a high-value anti-freeze.

**) This can be mixed with an ethylene-glycol-based anti-freeze agent.

MANDATORY DISPOSAL!

GE Proprietary Information: CONFIDENTIAL! Use or disclosure of data contained on this sheet is subject to the restrictions on the cover or on the first page.

Technical Instruction: TA 1000-0206
Composition of circuit water in hot water and warm water heating systems

1 Scope 1
2 Quality of circuit water 1
3 Important 1
4 Water analysis 2

1 Scope

This instruction applies to the composition of circuit water in hot water (permissible flow temperature above 100°C) and warm water heating systems.

It does not apply to the engine cooling water circuit (Refer to TI 1000-0200)!

2 Quality of circuit water

		Saline water	Non-saline water
Appearance		Clear and odourless, no sediment or suspended matter	Clear and odourless, no sediment or suspended matter
pH value (25°C)		9 - 10,5	9 - 10,5
Electr. conductivity (at 25°C)	µS/cm	100 - 1500	< 100
Oxygen O_2 content	mg/l	< 0,02	< 0,05
Alkaline earths Ca^{2+}, Mg^{2+}	mmol/l	< 0,02	< 0,02
Total hardness	°dH	< 0,1	< 0,1
Chlorides Cl^-	mg/l	< 20	< 20
Phosphate PO^4	mg/l	5 - 15	5 - 10

3 Important

3.1 If there is a risk of below-zero temperatures (freezing), make sure to contact a specialist firm to determine the type of cooling agent required. Always comply with the specifications of the waste-heat boiler .

3.2 You should always check the water quality after topping up with larger quantities of make-up water, but at least once every year using a water-analysis procedure.

3.3 If the values in the table (section 2) are not achieved, the customer should contact a specialist outside firm familiar with water treatment.

3.4 Always use trisodium phosphate for the basic alkalinisation of the filling and make-up water.

3.5 Minimum filling pressure:

In the case of plants that use exhaust gas heat and operate on a water/glycol mixture,

please observe the following minimum filling pressure values depending on the inlet temperature.

GE Proprietary Information: CONFIDENTIAL! Use or disclosure of data contained on this sheet is subject to the restrictions on the cover or on the first page.

Inlet temperature °C	Minimum filling pressure required bar
90	2,0
95	2,5
100	3,0
105	3,5
110	4,0

4 Water analysis

Always take the following points into account when performing water analyses:

4.1 Sampling should be done properly, as the analysis results can be easily distorted.
Always use clean glass or plastic sample containers.

Always rinse the sample containers thoroughly (3 to 5 times) with the water to be tested before taking the actual sample. Where water temperatures exceed 25 °C, you must take the sample via a cooler which cools the water to be analysed to a temperature of 25 °C.

4.2 You should determine the temperature, pH value, oxygen or carbon dioxide content immediately after the sample is taken on site.

4.3 You must carry out the analytical tests according to the analysis instructions for the water quality concerned.

4.4 You must exercise great care and be very precise when carrying out the water analysis.
Because of the minute quantities of substances in the water, with an order of magnitude of less than 0.1% and in some cases even less than 0.01%, a water analysis is similar to a chemical trace analysis and therefore requires very sensitive detection methods.

4.5 Always use uniform units of measure to indicate the concentrations of substances in the water.

The most common units are "mg/l" or "g/l" or "µg/l".

Sometimes "mol/m³" or "val/kg" are also used.

4.6 A one-off water analysis will never guarantee the actual quality of the water present in the systems over a prolonged period of time. You should therefore always use average analysis results to assess the water quality.

GE Proprietary Information: CONFIDENTIAL! Use or disclosure of data contained on this sheet is subject to the restrictions on the cover or on the first page.

1 General 1
2 Gas types 1
3 Limit values 1
3.1 Checklist for fuel gas quality information 5
4 Appendix I / Explanatory notes 7
4.1 Remarks 7
4.2 Fuel gas composition and characteristics 7
4.2.1 Main components 8
4.2.2 Trace and accompanying elements 8
5 Appendix II / Determining silicon-organic compounds in landfill gas, sludge gas and biogas 8
5.1 Remarks 8
5.1.1 Requirements for sampling and the selection of the sample location 9
5.1.2 Silicon-organic compounds 9

1 General

Unlike petrol and diesel fuels, gaseous fuels generally do not have to comply with strict specifications or classifications.

GE Jenbacher engine systems are optimally geared to a contractually defined fuel gas composition. Any deviation from this fuel-gas composition and/or any exceeding of the fuel gas limit levels will usually have a negative effect on engine operation.

Lubricating oil can lose its corrosion protection characteristics due to impurities in the fuel gas. The results of regular lubricating oil analyses are indicative of fuel gas impurities. In this respect, please refer to the following Technical Instructions:

TI 1000-0112

TI no. 1000-1109

TI 1000-0099B

TI 1000-0099C.

2 Gas types

Fuel gas quality - natural, associated petroleum, bio- and landfill gas

Please refer to the following Technical Instructions for other qualities of fuel gas:

TI No.: 1000-0301: Mine gas

TI No.: 1000-0302: Special gas (wood, coke and converter gas)

3 Limit values

Fuel gases are composed of various individual components, i.e. main components and trace and accompanying elements. In order to determine the relevant fuel characteristics for physical engine operation, the main components must be known and must be specified in the form of a comprehensive gas analysis.

Trace and accompanying elements are usually impurities found in the ppm range. Unlike the effects of main components, the effects of trace or accompanying elements do not become noticeable until the engine has been operational for a certain period of time.

GE Proprietary Information: CONFIDENTIAL! Use or disclosure of data contained on this sheet is subject to the restrictions on the cover or on the first page.

General limiting conditions [1]

Fuel gas must not be potentially explosive (no ATEX rating)		
Gas pressure	-	In accordance with project specification
Gas pressure, max. fluctuation speed	10 mbar/sec.	
Gas temperature	0°C < T < 40°C	Other temperatures should be checked in all cases.
Gas moisture content	< 80% relative	We advise against using an active carbon filter. However, there must be no condensate in the controlled gas system up to the gas mixer.
	< 50% relative	A requirement when applying a GE Jenbacher activated carbon filter at the intake of the activated carbon filter. Applies to any gas temperature.
	Dew point <18°C	Requirement for ClAir pad gas (approx. 2% of total gas volume required), higher dew points on request.
	< 0.2 %Vol	For precombustion chamber gas in type 6 engines
Condensate, sublimate	0	No condensate or sublimate in the components that come into contact with gas and/or mixture.
Hu fluctuation speed	1% / 30 sec.	
methane number speed of change	10 MN/30 sec.	
Oxygen content	< 3 %Vol	When using a TSA gas cleaning system

[1]) Condition at the interface to GE Jenbacher scope of supply

Dust

Particle size	> 3 µm	The filter in the gas train is not used as a work filter [3])
Particle volume	50 mg/10kWh	

Trace and accompanying elements

Si: total silicon as Si_{BG} [2])	0.02	Without catalytic converter
	0.0005	With catalytic converter

[2]) When using a fuel gas with traces of volatile oxidisable silicon compounds, a clear correlation can be established between the Si compound content of the fuel gas and that of the used engine oil. The operational value Si_B is the determining value for the amount of silicon fed to the engine.

This value is determined using two oil analyses:

Δ Si $_{\text{content in engine oil}}$: the increase in the Si content of the engine oil in ppm between two analyses, and

Δ Oil service life : the operating time in hours between the two oil analyses.

GE Proprietary Information: CONFIDENTIAL! Use or disclosure of data contained on this sheet is subject to the restrictions on the cover or on the first page.

$$Si_{\text{Operational value}}\,[Si_B] = \frac{\Delta\, Si_{\text{content in engine oil}}\,[\text{ppm}] \times \text{oil capacity (l)}}{\text{Average engine power output [kW]} \times \Delta \text{ oil service life (h)}} \times 1.1$$

Sample calculation

Increase in the Si content of the engine oil between two analyses	40 ppm
Oil capacity	500 l
Engine output	2000 kW
Operational oil life between the analyses	600 h

$$Si_B = \frac{40\text{ ppm} \times 500\text{ l}}{2000\text{ kW} \times 600\text{ h}} \times 1.1$$

Si_B=0.018 actual value

Si_{BG}=0.02 $Si_B < Si_{BG}$ ⇨ OK

In the preparatory phase of the project, GE Jenbacher are able to make an estimate of the expected operational value SiB based on a fuel gas flow which is characteristic of the engine operation. Depending on the outcome, GE Jenbacher are able to offer their clients maintenance schedules and/or make recommendations for improvement measures. During operation, adherence to the limit levels found in the oil analysis will ensure the validity of the contractual maintenance plan. The sampling requirements and procedure are described in more detail in Section 5, Appendix II.

Trace and accompanying elements

Total sulphur [5])	< 700 mg/10kWh [4])	Without catalytic converter
	< 1200 mg/10kWh [4])	Without catalytic converter, limited warranty [6])
	< 200 mg/10kWh [4])	with catalyst for CO[7])
	< 20 mg/10kWh [4])	with catalyst for formaldehyde [8])
	< 500 mg/10kWh [4])	When using an active carbon filter, limit does not relate to downstream components (see above)
	< 700 mg/10kWh [4])	When using a ClAir system, limit does not relate to upstream components (see above)
halogen compounds [5]) Total Cl + 2 * total F	< 100 mg/10kWh [4])	Without catalytic converter
	< 400 mg/10kWh [4])	Without catalytic converter, limited warranty [6])
	< 200 mg/10kWh [4])	When using an active carbon filter, limit does not relate to downstream components (see above)
	< 200 mg/10kWh [4])	When using a ClAir system, limit does not relate to upstream components (see above)

GE Proprietary Information: CONFIDENTIAL! Use or disclosure of data contained on this sheet is subject to the restrictions on the cover or on the first page.

Trace and accompanying elements

	< 20 mg/10kWh [4])	With catalytic converter
Ammonia	< 50 mg/10kWh [4])	NH3 has a direct effect on the nitrogen oxide emissions in the engine exhaust gas. Higher NH3 values in the fuel gas may result in the NOx values for the engine exhaust gas stated in the specification being exceeded.
Total – oil content	< 5 mg/10kWh [4])	
Total trace elements when catalytic converter is used	The metals and heavy metals listed below as examples have the effect of deactivating the catalytic converter. This reduces its service life accordingly. ▪ Sulphur, phosphorus, lead, mercury, arsenic, antimony, zinc, copper, tin, iron, nickel and chromium. ▪ The warranty will cease to apply if the cumulative volume of these elements exceeds 350 g/m³ of catalytic converter. The evidence will be provided by quantitative analysis of a used sample. The exhaust gas must in all cases be free of silicon compounds, such as siloxanes.	

[3]) The microfilter used as standard by GE Jenbacher boasts a filtration efficiency of approx. 99% for particles > 3 µm and is not designed to be a work filter.

The permissible dust or particle content specified for > 3 µm is only indicative of the filter service life if it has not been additionally reduced by moisture.

If the filter service life as stated in the maintenance plan is not achieved or the filter service life is found to be unacceptable or the operation of the gas train is compromised, measures must be taken by the customer to improve the situation.

[4]) The absolute quantity of elements which have entered the engine is decisive when analysing the trace element content. In order to compare different gases, the trace element concentration is compared to a certain level of fuel gas energy and to natural gas (methane, Hu approx. 10 kWh/Nm³).

$$S = \frac{\text{Measured concentration [mg / Nm}^3\text{]}}{\text{Calorific value [kWh/Nm}^3\text{]}} \times 10$$

Concentrations are frequently indicated in volume-related quantities e.g. ppm (parts per million), which must be converted in an intermediate step to mg/Nm3 using the density under normal conditions: i.e.

$$S' \text{ [mg / Nm}^3\text{]} = \text{Measured concentration [ppm]} \times \text{element density [kg / Nm}^3\text{]}$$

Comment: the ppm ($=10^{-6}$) indication and conversion from kg to mg (10^{+6}) cancel each other out.

Sample calculation:

CO_2	40%
CH_4	60%
H_2S	260 ppm (at normal density condition = 1.52 kg/Nm³)
Lower calorific value	6 kWh/Nm³ (= 60% of 100% CH_4 = 10 kWh/Nm³)

Step 1: Conversion of measured value in ppm to mg/Nm³, in relation to H_2S

GE Proprietary Information: CONFIDENTIAL! Use or disclosure of data contained on this sheet is subject to the restrictions on the cover or on the first page.

S'_1 [mg / Nm³]= 260 [ppm] x 1.52 [kg / Nm³] S'_1= 395 mg / Nm³

Step 2: conversion of the value in relation to H_2S to the limited sulphur value in mg/Nm³

$$S' \text{ [mg / Nm}^3\text{]} = \frac{\text{Sulphur molar mass}}{\text{H2S molar mass}} \times S'_1 \qquad S' \text{ [mg / Nm}^3\text{]} = \frac{32}{34} \times 395 \text{ [mg / Nm}^3\text{]}$$

S'_1= 372 mg / Nm³

Step 3: conversion of measured value in mg/Nm³ to comparable value (mg/10 kWh)

$$S = \frac{372 \text{ [mg / Nm}^3\text{]}}{6 \text{ [kWh / Nm}^3\text{]}} \times 10 \quad \Rightarrow \quad S = 620 \text{ mg/ 10 kWh} \quad \text{actual value}$$

Without catalytic converter ⇨ S_G= 700 mg/ 10 kWh $S < S_G$ ⇨ OK

In principle, this sample calculation also applies to all limit levels indicated in mg/10 kWh.

[5]) The oil service life is reduced noticeably as soon as a total sulphur content of approx. 50 mg/10 kWh and a total halogen content of approx. 20 mg/10 kWh are reached (refer to TI 1000-0099 B and C). When using desulphurisation systems, it should be remembered that if these systems fail very high sulphur concentrations may enter the engine and damage it within a very short period of time.

[6]) Assuming a service life reduction of all engine and system components that come into contact with the fuel gas, engine oil or exhaust gas and an increase in maintenance activities, the limits can be increased to the values mentioned in the table. In order to achieve a satisfactory minimum oil service life (approx. 500 Oh) a suitably large lubricating oil reservoir must be fitted, as designed by GE Jenbacher. For plants using heat recovery, care must be taken to ensure that the acid dew point in the waste heat boiler - taking partial load operation into account - is exceeded.

[7] SO_2 is converted into SO_3 in the catalytic converter. Sulphurous acid is formed at the same time as condensate. Consequently, heat recovery boilers, catalytic converters and exhaust gas systems for exhaust gas temperatures < 180°C are covered by a limited warranty.

[8]) Precondition for using formaldehyde cats with biogas: fuel gas except CO_2, N_2, O_2 equivalent to natural gas quality, i.e. for sulphur < 20 mg/10 kWh. Natural gas lubricant must be used and the gas quality must be monitored.

3.1 Checklist for fuel gas quality information

General information

Name of the project or the plant:	
Name of the contact person:	
Telephone number:	
Type and origin of the gas:	

Physical fuel gas characteristics

Gas pressure (from – to)	-	mbar(o)
Gas temperature (from – to)	-	°C

GE Proprietary Information: CONFIDENTIAL! Use or disclosure of data contained on this sheet is subject to the restrictions on the cover or on the first page.

Physical fuel gas characteristics

Rel. gas moisture content (from – to)	-	%
Atmospheric pressure (from – to)		mbar

Chemical fuel gas characteristics

Main components:	**%Vol:**	**Measurement method:**
Methane CH_4:		
Ethane C_2H_6:		
Propane C_3H_8:		
Butane C_4H_{10}:		
Pentane C_5H_{12}:		
Hexane C_6H_{14}:		
Carbon monoxide CO:		
Hydrogen H_2:		
Carbon dioxide CO_2:		
Nitrogen N_2:		
Oxygen O_2:		
Other:		

Additional information

Trace elements:		**Quantity**	**mg/10kWh:**	**Measurement method:**
Ammonia NH_3:				
Total chlorine:				
Total fluorine:				
Hydrogen sulphide H_2S:				
Total silicon-organic compounds:				
Total sulphur:				
Dust volume	< 3 µm			
	> 3 µm			

Other information:

GE Proprietary Information: CONFIDENTIAL! Use or disclosure of data contained on this sheet is subject to the restrictions on the cover or on the first page.

GE Jenbacher **recommends that you only use analysis institutes with which they are familiar.**

4 Appendix I / Explanatory notes

4.1 Remarks

Unlike petrol and diesel fuels, gaseous fuels generally do not have to comply with strict specifications or classifications. In principle, all gaseous fuels which can be used in combustion engines can be classified as “fuel gases”.

The physical and chemical characteristics of gaseous fuels can vary enormously. However, from the point of view of construction and operating processes, the engines are designed to function within a very strict range of characteristics and are often very sensitive to changes to these characteristics.

The engine system is optimally designed to accommodate the contractually defined fuel-gas composition for which it was sold. If significant changes occur, particularly where fuel gas limit levels are exceeded, this can have an adverse effect on engine operation.

If it becomes clear or if the possibility exists that changes will occur in the fuel gas characteristics in the course of time, the customer should notify GE Jenbacher accordingly. The limiting values as indicated in this TI are based on extensive experience on the part of GE Jenbacher and offer a basis for uninterrupted operation.

GE Jenbacher offer their clients comprehensive information and advice.

4.2 Fuel gas composition and characteristics

Fuel gases are normally made up of several components which can be divided into two classes, i.e. main components and trace elements.

The main components determine the relevant fuel characteristics for the physical engine operation (e.g. calorific value, combustion air ratio, combustion temperature, laminary flame propagation speed, ignition limits, knock resistance). These are usually expressed as % Vol.

Trace and accompanying elements usually enter the gas during the gas formation process. They are usually impurities in the ppm range. Unlike the effects of main components, the effects of trace or accompanying elements do not become noticeable until the engine has been operational for a certain time (cumulative effect).

As these effects are usually negative, fuel gases should be free of trace and/or accompanying elements. Where very substantial amounts of accompanying elements are present, a suitable fuel gas cleaning system is the best method for guaranteeing efficient use of the fuel gas.

GE Proprietary Information: CONFIDENTIAL! Use or disclosure of data contained on this sheet is subject to the restrictions on the cover or on the first page.

To determine the suitability of a fuel gas for use in combustion engines, comprehensive knowledge of the gas analysis is required.

Practical experience shows that even results which were obtained in the same operating conditions can vary substantially. The effect of trace elements can therefore only be predicted to a certain extent, as very complex interrelationships and cause/effect relationships are often involved.

GE Jenbacher cannot acknowledge warranty claims related to problems caused by exceeding one or more of the limiting values mentioned in this TI.

4.2.1 Main components

Apart from a number of limiting conditions relating to the data sheet, the technical specifications also contain the fuel gas type.

In cases where the available fuel gas does not conform to what is stated in the standard product range, a special - customer-specific - solution can be arranged, taking into account all technical and efficiency-related options.

The composition of some gas types (e.g. landfill gases, pyrolysis gas, mine gas, etc.) can vary substantially. In Leanox-controlled engine operation (under load) these variations can largely be compensated for by the engine management. In order to guarantee a satisfactory starting behaviour, however, for certain ranges the engine management must have available suitable/usable information (e.g.: calorific value, CH4 content) on the current gas quality.

4.2.2 Trace and accompanying elements

In principle, the effects of trace elements are proportional to the total amount of elements that were fed into the engine during the operating time. When using a fuel gas with a high calorific value, the gas flow to the engine is smaller compared to a gas with a lower calorific value. As a result, the amount of trace elements fed into the engine - and therefore their effect - differs in the event of identical concentrations of trace elements in the fuel gas. In order to be able to compare various gases, the trace element concentration values must be compared to a certain fuel gas energy amount (the fuel gas output required to generate a certain engine output is very similar for all gas types).

GE Jenbacher have therefore set the energy content of 1 standard cubic metre of methane at 10 kWh (rounded off).

5 Appendix II / Determining silicon-organic compounds in landfill gas, sludge gas and biogas

5.1 Remarks

Silicon-organic compounds are found in fuel gases from landfills, water purification plants and biogas plants (depending on the source of the biomass). When using these fuel gases in combustion engines, silicon oxide is produced (quartz particles), which may result in increased maintenance of the machinery and, in certain cases, in the deactivation of an exhaust gas catalytic converter.

While the tried and tested GE Jenbacher interchangeable activated carbon system effectively removes these compounds from sludge gas and biogas, any decision to use this cleaning technique for landfill gas should be taken on a case-by-case basis.

The silicon load is monitored during operation of the plant using the silicon limit level referred to in section 2. Strict adherence to this limit level forms the basis for the validity of a service contract. This limit level is, however, not the actual value of the silicon load, but represents the cumulative silicon input for the operating period.

GE Proprietary Information: CONFIDENTIAL! Use or disclosure of data contained on this sheet is subject to the restrictions on the cover or on the first page.

Particularly in the case of fuel gases from landfill sites, GE Jenbacher advice is to analyse the silicon-organic compounds in the preparatory project phase in order to estimate the expected level of maintenance operations. The analysis results also provide GE Jenbacher with a framework on which to base its advice for the best gas-cleaning method, taking into account feasibility and efficiency aspects.

The sampling and analysis of silicon-organic compounds in the usual concentrations found cannot be regarded as being a readily available state-of-the-art technique. GE Jenbacher offer their clients a tried and tested analysis technique developed by GE Jenbacher. The sampling should only be performed by trained specialist GE Jenbacher staff.

Section 5.1.1 explains the limiting conditions required for sampling and analysis to yield practical results. Section 5.1.2 contains general information regarding silicon-organic compounds that are relevant to the operation of engines using the above-mentioned gases.

5.1.1 Requirements for sampling and the selection of the sample location

Any determination of silicon-organic compounds is always a random indication. Sampling can only yield suitable results if the fuel gas source to be sampled meets the following criteria:

1. The sampling location must be in a part of the gas line with a constant gas flow and must be **free of condensate**. Up or downward pipe sections are well suited for this purpose. In the case of horizontal pipe sections, the sampling location must branch off upwards, otherwise condensate will collect in the branches. This would distort the sampling result even if the condensate had been drained and the gas appeared dry to the naked eye.
2. The fuel gas supply must have been up and running without interruption for at least three (3) hours. The gas volume flow must be at least 75% of the operational gas flow that would be needed when the planned gas engine system was operating at full load. With gas lines having a reduced flow during sampling, there is a risk of measurement errors when trace elements condense on cold surfaces and/or when silicon-organic compounds are absorbed into other condensed trace elements.
3. The sampling location should preferably be in the pressurised part of the fuel gas line before the planned engine. However, sampling in negative pressure lines is also possible.
4. During this period, landfill gas plants require the suction pressure to be approximately the same as the suction pressure during the planned full-load operation. Landfill sites which produce no gas flows in the volumes required for the planned engine operation cannot be sampled satisfactorily. In the case of landfill sites, suitable samples can only be taken in a gas collecting line. Sampling from individual sources will not yield results that can be used as described in this Technical Instruction.
5. In order to ensure that the trace element load in the fuel gas is as consistent as possible, none of the settings of the operational gas plant should be altered during sampling.

5.1.2 Silicon-organic compounds

Siloxanes, silanes and silanoles all belong to the silicon-organic compound group. Siloxanes are increasingly used in cosmetics, detergents and as anti-foaming agents in industry. The other substances enter the fuel gas as siloxane decomposition products. These are combustible and very volatile substances that originate from watery systems (sludge, fermenters, waste-dump leach water). The following eight individual components have proven to be the main components when estimating the silicon-compound content in fuel gas originating from

- landfill sites for domestic waste,

GE Proprietary Information: CONFIDENTIAL! Use or disclosure of data contained on this sheet is subject to the restrictions on the cover or on the first page.

- waste treatment plants, mainly processing domestic waste water,
- biogas plants, depending on the origin of the biomass.

.

In the case of gases originating from landfills where intermediate products from silicon chemical processes are dumped, or originating from waste treatment plants into which silicon-containing waste water is discharged, a laboratory analysis is used to check these for other silicon-organic compounds. The list below describes the minimum scope of the analysis.

Description:	Abbreviation:	Molecule formula:	CAS No.:	Proportion of Si atoms in the molecule [g/g]:
Tetramethysilane	TMS	$Si\text{-}(CH_3)_4$	75-76-3	0,319
Trimethylsilanole	MOH	$Si\text{-}(CH_3)_3\text{-}OH$	1066-40-6	0,312
Hexamethyldisilox-ane	L2	$Si_2\text{-}O\text{-}(CH_3)_6$	107-46-0	0,347
Hexamethylcy-clotrisiloxane	D3	$Si_3\text{-}O_3\text{-}(CH_3)_6$	541-05-9	0,380
Octamethyltrisiloxane	L3	$Si_3\text{-}O_2\text{-}(CH_3)_8$	107-51-7	0,357
Octamethylcyclote-trasiloxane	D4	$Si_4\text{-}O_4\text{-}(CH_3)_8$	556-67-2	0,380
Decamethylte-trasiloxane	L4	$Si_4\text{-}O_3\text{-}(CH_3)_{10}$	141-62-8	0,362
Decamethylcyclopen-tasiloxane	D5	$Si_5\text{-}O_5\text{-}(CH_3)_{10}$	541-02-6	0,380

The total of the silicon-organic compounds contained in the fuel gas is used to calculate the total silicon atoms contained in the fuel gas in [mg/Nm³].

Together with the methane value, this value can be converted into the content of silicon atoms from silicon-organic compounds in [mg/10 kWh] (as stated on page 3). This value is the relevant value for estimating the maintenance level required by a gas engine.

Example:

Description	Analysis result [mg/Nm³]	Proportion of Si atoms in the molecule [g/g]	Silicon atoms [mg/Nm³]
Tetramethysilane	<0,1	0,319	0,0
Trimethylsilanole	3,3	0,312	1,0
Hexamethyldisiloxane	6,1	0,347	2,1
Hexamethylcyclotrisiloxane	0,3	0,380	0,1
Octamethyltrisiloxane	0,8	0,357	0,3
Octamethylcyclotetrasiloxane	2,2	0,380	0,84

GE Proprietary Information: CONFIDENTIAL! Use or disclosure of data contained on this sheet is subject to the restrictions on the cover or on the first page.

Description	Analysis result [mg/Nm³]	Proportion of Si atoms in the molecule [g/g]	Silicon atoms [mg/Nm³]
Decamethyltetrasiloxane	0,4	0,362	0,145
Decamethylcyclopentasiloxane	1,6	0,380	0,6
Total silicon atoms [mg/Nm³]			**5,1**

Given a methane content of 55 % Vol in the fuel gas, this would result in:

$$\frac{(5.1 \text{ mg silicon atoms / Nm}^3 \times 100\%)}{(55\% \text{ methane content})} = 9.2 \text{ mg silicon atoms / 10kWh.}$$

This value is the relevant value for estimating the maintenance level required by a gas engine.

GE Proprietary Information: CONFIDENTIAL! Use or disclosure of data contained on this sheet is subject to the restrictions on the cover or on the first page.

1 General 1
1.1 Safety requirements for customer's gas-extraction system 1
2 Gas types 1
3 Limit values 1
3.1 General limit values 2
3.1.1 General pre-combustion chamber gas limit levels 3
3.2 Trace and accompanying elements 3
3.3 Checklist for fuel gas quality information 4
4 Appendix I / Explanatory notes 5
4.1 Remarks 5
4.2 Fuel gas composition and characteristics 6
4.2.1 Main components 6
4.2.2 Trace and accompanying elements 6

1 General

Unlike petrol and diesel fuels, gaseous fuels generally do not have to comply with strict specifications or classifications.

GE Jenbacher engine systems are optimally geared to a contractually defined fuel gas composition. Any deviation from this fuel-gas composition and/or any exceeding of the fuel gas limit levels will usually have a negative effect on engine operation.

Lubricating oil can lose its corrosion protection characteristics due to impurities in the fuel gas. The results of regular lubricating oil analyses are indicative of fuel gas impurities.
In this respect, please refer to the following Technical Instructions:

TI No.: 1000-1109

TI No.: 1000-0099B

TI No.: 1000-0099C

1.1 Safety requirements for customer's gas-extraction system

The customer's gas-extraction installation must be state-of-the-art. During operation of the gas-extraction system the customer must constantly (and redundantly) monitor the methane content. If the methane content underruns 25 vol. %, the gas supply must immediately be interrupted to prevent an explosive mixture reaching the gas-supply system.

2 Gas types

This Technical Instruction applies to mine gas.

Please refer to the following Technical Instructions for other qualities of fuel gas:

TI No.: 1000-0300: Natural, Associated Petroleum, bio- and landfill gas

TI No.: 1000-0302: Special gas (wood, coke and converter gas)

3 Limit values

Fuel gases are composed of various individual components, i.e. These include main components and trace and accompanying elements.

GE Proprietary Information: CONFIDENTIAL! Use or disclosure of data contained on this sheet is subject to the restrictions on the cover or on the first page.

In order to determine the relevant fuel characteristics for physical engine operation, the main components must be known and must be specified in the form of a comprehensive gas analysis. See the most recent product range (incl. annexes) or the specifications of the various engine versions for the main gas component limit values for operation of the various engine versions.

Trace and accompanying elements are usually impurities found in the ppm range. Unlike the effects of main components, the effects of trace or accompanying elements do not become noticeable until the engine has been operational for a certain period of time.

3.1 General limit values

In the case of engines with a pre-combustion chamber system, the maximum oxygen content in the fuel gas may not exceed 12 Vol [%].

General limiting conditions

Condition at the interface to GE Jenbacher controlled gas train		
Gas pressure	-	In accordance with project specification
Gas pressure, max. fluctuation speed	10 mbar/sec.	
Gas temperature	< 40°C	Higher temperatures should be checked in all cases.
Relative gas moisture content *)	< 80%	However, no condensate in the controlled gas system up to the gas mixer.
Condensate, resublimation	0	No condensate nor sublimation in the components coming into contact with gas and/or mixture (see TI No.: 1400-0091).
Hu fluctuation speed	2 % / 30 sec.	

*) In tropical countries, i.e. countries **between 30° northern and 30° southern latitude**, the following rel. gas moisture values apply:

Gas temperature	< 40°C	Higher temperatures should be checked in all cases.
Relative gas moisture	< 50%	However, no condensate in the controlled gas system up to the gas mixer.

As an example for this area, the following countries are listed:
Central America (incl. Mexico), South America (with the exception of Uruguay, Argentina and Chile), Africa, the Arabian peninsula (incl. Israel), the Indian subcontinent (Pakistan, Bangladesh, India, Sri Lanka), the whole of South-East Asia (incl. China), Australia (north of 30° latitude) and Oceania.

Additional information:

In the case of countries with a very high water content in the intake air – see TI No.: 1100-0110 – reductions in engine power must be taken into account for the current product range.

GE Proprietary Information: CONFIDENTIAL! Use or disclosure of data contained on this sheet is subject to the restrictions on the cover or on the first page.

3.1.1 General pre-combustion chamber gas limit levels

Apart from the general fuel gas requirements, the limit values below apply to the gas temperature and relative gas humidity of the pre-combustion chamber system for engines with a pre-combustion chamber gas compressor.

Pre-combustion chamber requirements

condition at the interface to the pre-combustion chamber gas compressor.		
Gas temperature	< 40°C	Higher temperatures should be checked in all cases. Heat up the gas after the pre-combustion chamber compressor to 40°C and retain this temperature.
Relative gas moisture	< 15%	However, no condensate in the controlled gas system up to the gas mixer.

3.2 Trace and accompanying elements

Dust		
Filter mesh	< 3 µm	If the filter service life falls short of the target in the maintenance plan, the customer must take improvement measures.

Trace and accompanying elements		
Total sulphur *)	< 700 mg/10kWh **)	Without catalytic converter
	< 2,000 mg/10kWh **)	Without catalytic converter, limited warranty ***)
	< 200 mg/10kWh **)	With catalytic converter ****)
Halogen compounds *) Total Cl + 2 * total F	< 100 mg/10kWh **)	Without catalytic converter
	< 400 mg/10kWh **)	Without catalytic converter, limited warranty ***)
	< 20 mg/10kWh **)	With catalytic converter
Ammonia	< 50 mg/10kWh **)	
Total – oil content	< 5 mg/10kWh **)	

*) The oil service life is reduced noticeably as soon as a total sulphur content of approx. 50 mg/10 kWh and a total halogen content of approx. 20 mg/10 kWh are reached (refer to TI 1000-0099 B and C).

**) The absolute quantity of elements which have entered the engine is decisive when analysing the trace element content. In order to compare various coal-mine gases, the trace element concentration is compared to a certain fuel gas energy amount and to natural gas (methane, Hu approx. 10 kWh/mn³).

Concentrations are frequently indicated in volume-related quantities e.g. ppm (parts per million), which must be converted to mg/Nm3 using the density under normal conditions: i.e.

Comment: the ppm (=10^{-6}) indication and conversion from kg to mg (10^{+6}) cancel each other out.

***) Assuming a service life reduction of all engine and system components that come into contact with the fuel gas or the engine oil and an increase in maintenance activities, the limits can be increased to the values mentioned

GE Proprietary Information: CONFIDENTIAL! Use or disclosure of data contained on this sheet is subject to the restrictions on the cover or on the first page.

in the table. In order to achieve a satisfactory minimum oil service life (approx. 500 Oh) a suitably large lubricating oil reservoir must be fitted, as designed by GE Jenbacher. For plants using heat recovery, care must be taken to ensure that the acid dew point in the waste heat boiler - taking partial load operation into account - is exceeded.

****) SO_2 is converted to SO_3 in the catalytic converter. Sulphurous acid is formed at the same time as condensate. Consequently, we recommend designing heat recovery boilers and exhaust gas systems for exhaust gas temperatures > 180°C.

3.3 Checklist for fuel gas quality information

General information

Name of the project or the plant:	
Country and city of installation:	
Name of the contact person:	
Telephone number:	
Type and origin of the gas:	

Physical fuel gas characteristics

Gas pressure (from – to)	-	mbar(o)
Gas temperature (from – to)	-	°C
Rel. gas moisture content (from – to)	-	%

Chemical fuel gas characteristics

Main components:	**%Vol:**	**Measurement method:**
Methane CH_4:		
Nitrogen N_2:		
Oxygen O_2:		
Carbon dioxide CO_2:		
Ethane C_2H_6:		
Propane C_3H_8:		
Butane C_4H_{10}:		
Pentane C_5H_{12}:		
Hexane C_6H_{14}:		
Carbon monoxide CO:		
Hydrogen H_2:		
Other:		

Additional information

Trace elements:	**Quantity**	**mg/10kWh**	**Measurement method**
Ammonia NH_3:			
Total chlorine:			
Total fluorine:			
Hydrogen sulphide H_2S:			

GE Proprietary Information: CONFIDENTIAL! Use or disclosure of data contained on this sheet is subject to the restrictions on the cover or on the first page.

Additional information

Trace elements:		**Quantity**	**mg/10kWh**	**Measurement method**
Total sulphur:				
Dust volume	< 3 µm			
	> 3 µm			

Other information:

GE Jenbacher **recommends that you only use analysis institutes with which they are familiar.**

4 Appendix I / Explanatory notes

4.1 Remarks

Unlike petrol and diesel fuels, gaseous fuels generally do not have to comply with strict specifications or classifications. In principle, all gaseous fuels which can be used in combustion engines can be classified as “fuel gases”.

The physical and chemical characteristics of gaseous fuels can vary enormously. However, from the point of view of construction and operating processes, the engines are designed to function within a very strict range of characteristics and are often very sensitive to changes to these characteristics.

The engine system is optimally designed to accommodate the contractually defined fuel-gas composition for which it was sold. If significant changes occur, particularly where fuel gas limit levels are exceeded, this can have an adverse effect on engine operation.

If it becomes clear or if the possibility exists that changes will occur in the fuel gas characteristics in the course of time, the customer should notify GE Jenbacher accordingly.

The limiting values as indicated in this TI are based on extensive experience on the part of GE Jenbacher and offer a basis for uninterrupted operation.

GE Jenbacher offer their clients comprehensive information and advice.

GE Proprietary Information: CONFIDENTIAL! Use or disclosure of data contained on this sheet is subject to the restrictions on the cover or on the first page.

4.2 Fuel gas composition and characteristics

Fuel gases are normally made up of several components which can be divided into two classes, i.e. main components and trace elements.

The main components determine the relevant fuel characteristics for the physical engine operation (e.g. calorific value, combustion air ratio, combustion temperature, laminary flame propagation speed, ignition limits, knock resistance). These are usually expressed as % Vol.

Trace and accompanying elements usually enter the gas during the gas formation process. They are usually impurities in the ppm range. Unlike the effects of main components, the effects of trace or accompanying elements do not become noticeable until the engine has been operational for a certain time (cumulative effect).

As these effects are usually negative, fuel gases should be free of trace and/or accompanying elements. Where very substantial amounts of accompanying elements are present, a suitable fuel gas cleaning system is the best method for guaranteeing efficient use of the fuel gas.

To determine the suitability of a fuel gas for use in combustion engines, comprehensive knowledge of the gas analysis is required.

Practical experience shows that even results which were obtained in the same operating conditions can vary substantially. The effect of trace elements can therefore only be predicted to a certain extent, as very complex interrelationships and cause/effect relationships are often involved.

GE Jenbacher cannot acknowledge warranty claims related to problems caused by exceeding one or more of the limiting values mentioned in this TI.

4.2.1 Main components

Apart from a number of limiting conditions relating to the data sheet, the technical specifications also contain the fuel gas type.

In cases where the available fuel gas does not conform to what is stated in the standard product range, a special - customer-specific - solution can be arranged, taking into account all technical and efficiency-related options.

It is normal for the composition of some gas types, such as mine gas, to vary substantially. In Leanox-controlled engine operation (under load) these variations can largely be compensated for by the engine management. In order to guarantee a satisfactory starting behaviour, however, for certain ranges the engine management must have available suitable/usable information (e.g.: calorific value, CH_4 content) on the current gas quality.

4.2.2 Trace and accompanying elements

In principle, the effects of trace elements are proportional to the total amount of elements that were fed into the engine during the operating time. When using a fuel gas with a high calorific value, the gas flow to the engine is smaller compared to a gas with a lower calorific value. As a result, the amount of trace elements fed into the engine - and therefore their effect - differs in the event of identical concentrations of trace elements in the fuel gas. In order to be able to compare various gases, the trace element concentration values must be compared to a certain fuel gas energy amount (the fuel gas output required to generate a certain engine output is very similar for all gas types).

GE Jenbacher have therefore set the energy content of 1 standard cubic metre of methane at 10 kWh (rounded off).

GE Proprietary Information: CONFIDENTIAL! Use or disclosure of data contained on this sheet is subject to the restrictions on the cover or on the first page.

1 General **1**
2 Gas types **1**
3 Limit values **2**
3.1 General 2
3.2 Physical, chemical and thermodynamic requirements for gas 2
3.2.1 Sample calculation for converter gas (LD gas) 5
4 Appendix I / Explanatory notes **9**
4.1 Remarks 9
4.2 Fuel gas composition and characteristics 9
4.2.1 Main components 9
4.2.2 Trace and accompanying elements 10

1 General

Unlike petrol and diesel fuels, gaseous fuels generally do not have to comply with strict specifications or classifications.

GE Jenbacher engine systems are optimally geared to a contractually defined fuel gas composition. Any deviation from this fuel-gas composition and/or any exceeding of the fuel gas limit levels will usually have a negative effect on engine operation.

Lubricating oil can lose its corrosion protection characteristics due to impurities in the fuel gas. The results of regular lubricating oil analyses are indicative of fuel gas impurities. In this respect, please refer to the following Technical Instructions:

TI No.: 1000-1109

TI No.: 1000-0099B

TI No.: 1000-0099C

2 Gas types

This Technical Instruction relates to special gas applications. These gases are characterised by a high hydrogen and carbon monoxide content. Both the gas compositions and the trace and accompanying elements must remain within the ranges stipulated by GE Jenbacher in order to guarantee optimum engine operation.

The gases occur both as the product of the gasification process of various raw materials (e.g. wood, waste, coal, etc.) and as process gases (e.g. from blast furnace processes in the steel industry).

Table 1: Special gases and common characteristics

Gas description	Main gas components	Lower calorific value	Origin
Gas from the thermal processing of solid biomass (e.g. wood)	$CH_4/H_2/CO/CO_2/N_2$	1 – 3 kWh/Nm³	Gasification or pyrolysis of solid biomass [1)]
Gas from the thermal processing of waste materials	$CH_4/H_2/CO/CO_2/N_2$	1 – 3 kWh/Nm³	Gasification or pyrolysis of various carriers
Thermoselect gas	$H_2/CO/CO_2/N_2/H_2O$	2 – 3 kWh/Nm³	Gasification of waste

GE Proprietary Information: CONFIDENTIAL! Use or disclosure of data contained on this sheet is subject to the restrictions on the cover or on the first page.

Gas description	Main gas components	Lower calorific value	Origin
Coke-oven gas	$CH_4/H_2/CO$	< 5 kWh/Nm³	Coking process
Converter gas, e.g. LD gas (Linz-Donawitz process)	CO/H_2	< 2.5 kWh/Nm³	Process gas from steel production

[1)] This does not include gas from the processing of biomass by micro-organisms (e.g. sludge gas).

Please refer to the following Technical Instructions for other qualities of fuel gas:

TI No.: 1000-0300: Natural, Associated Petroleum, bio- and landfill gas

TI No.: 1000-0301: Mine gas

3 Limit values

3.1 General

Fuel gases are composed of various individual components, i.e. main components and trace and accompanying elements. In order to determine the relevant fuel characteristics for physical engine operation, the main components must be known and must be specified in the form of a comprehensive gas analysis (see Checklist for fuel gas quality information).

Trace and accompanying elements are usually impurities found in the ppm range. Unlike the effects of main components, the effects of trace or accompanying elements do not become noticeable until the engine has been operational for a certain period of time.

3.2 Physical, chemical and thermodynamic requirements for gas

To guarantee faultless engine operation and the specified maintenance intervals, the following gas conditions must be **permanently** maintained at the GE Jenbacher interface.

Table 2: Gas characteristics required at the GE Jenbacher interface

Description	Supplement	Limitation	Unit	Remark
Gas pressure	Min./max.	-	mbar(o)	In accordance with project specification
	Fluctuation	10	mbar/s	
Gas temperature	Min.	10	°C	
	Max.	40	°C	Higher temperatures should be checked in all cases!
Relative gas moisture	Max.	80	%	Must be guaranteed at any temperature!
Lower calorific value	Min.	1,5	kWh/Nm3	Lower values should be checked in all cases!
	Fluctuation	2	%/30sec	

GE Proprietary Information: CONFIDENTIAL! Use or disclosure of data contained on this sheet is subject to the restrictions on the cover or on the first page.

Description	Supplement	Limitation	Unit	Remark
Dust or particle content	Dimension	> 3	µm	The filter in the gas train is not used as a work filter [3]
	Quantity	< 50	mg/10 kWh [2]	
Total Sulphur [4]	With catalytic converter	≤ 200	mg/10kWh	CO catalytic converter [5]
	Without catalytic converter	≤ 700	mg/10kWh	
	Without catalytic converter	≤ 1200	mg/10kWh	With limited warranty [6]
Total halogens [4] Cl + 2 * F	With catalytic converter	≤ 20	mg/10kWh	
	Without catalytic converter	≤ 100	mg/10kWh	
	Without catalytic converter	≤ 400	mg/10kWh	With limited warranty [6]
Highly flammable com-ponents	Acetylene (C2H2)	≤ 0,2	%Vol	These substances can cause uncontrolled spontaneous combustion in the system!
	Carbonyl sulphide (COS)	≤ 0,2	%Vol	
Explosivity	Gas must not be potentially explosive (no ATEX rating)			
Ammonia	NH_3	< 50	mg/10kWh	NH_3 has a direct effect on the nitrogen oxide emissions in the engine exhaust gas. Higher NH_3 values in the fuel gas may result in the NOx values for the engine exhaust gas stated in the specification being exceeded.
Prussic acid	HCN	-	mg/10kWh	The effect of prussic acid in fuel gas is not known at present!
Tar [7] ($C_xH_yR_z$)	Tar dew point	Min. 5°C below gas temperature	°C	Where gases contain tar, the gas train must be provided with a trace heating system including heat insulation!
Condensate or sublimate [8]		0		No condensate and no sublimation of water or tars in components that come into contact with gas and/or mixture!

GE Proprietary Information: CONFIDENTIAL! Use or disclosure of data contained on this sheet is subject to the restrictions on the cover or on the first page.

Description	Supplement	Limitation	Unit	Remark
Total trace elements when catalytic converter is used	The metals and heavy metals listed as examples have the effect of deactivating the catalytic converter. This reduces its service life accordingly. ▪ Sulphur, phosphorus, lead, mercury, arsenic, antimony, zinc, copper, tin, iron, nickel, chromium, etc. ▪ The warranty will cease to apply if the cumulative volume of these elements exceeds 350g/m³ of catalytic converter. The evidence will be provided by quantitative analysis of a used sample. The exhaust gas must in all cases be free of silicon compounds, such as siloxanes.			

2) The absolute quantity of elements which have entered the engine is decisive when analysing the trace element content. In order to compare different gases, the trace element concentration is compared to a certain level of fuel gas energy and to natural gas (methane, Hu approx. 10 kWh/Nm³).

$$S = \frac{\text{Measured concentration [mg / Nm}^3\text{]}}{\text{Calorific value [kWh/Nm}^3\text{]}} \times 10$$

Concentrations are frequently indicated in volume-related quantities e.g. ppm (parts per million), which must be converted in an intermediate step to mg/Nm³ using the density under normal conditions: i.e.

$$S' \text{ [mg / Nm}^3\text{]} = \text{measured concentration [ppm]} \times \text{element density [kg / Nm}^3\text{]}$$

Comment: the ppm ($=10^{-6}$) indication and conversion from kg to mg (10^{+6}) cancel each other out.

3) The microfilter used as standard by GE Jenbacher boasts a filtration efficiency of approx. 99 % for particles > 3 µm and is not designed to be a work filter.

The permissible dust or particle content specified for > 3 µm is only indicative of the filter service life if it has not been additionally reduced by moisture.

If the filter service life as stated in the maintenance plan is not achieved or the filter service life is found to be unacceptable or the operation of the gas train is compromised, measures must be taken by the customer to improve the situation.

4) The oil service life is reduced noticeably as soon as a total sulphur content of approx. 50 mg/10 kWh and a total halogen content of approx. 20 mg/10 kWh are reached (refer to TI 1000-0099 B and C). When using desulphurisation systems, it should be remembered that if these systems fail very high sulphur concentrations may enter the engine and damage it within a very short period of time.

This category also includes the limit levels for hydrofluoric acid (HF) and hydrochloric acid (HCl). Please also refer to the sample calculation for blast furnace gas (LD gas).

5) The catalytic converter converts SO2 into SO3. Sulphurous acid is formed at the same time as condensate. Consequently, heat recovery boilers, catalytic converters and exhaust gas systems for exhaust gas temperatures < 180°C are covered by a limited warranty in the event of damage.

GE Proprietary Information: CONFIDENTIAL! Use or disclosure of data contained on this sheet is subject to the restrictions on the cover or on the first page.

[6] Assuming a service life reduction of all engine and system components that come into contact with the fuel gas, engine oil or exhaust gas and an increase in maintenance activities, the limits can be increased to the values mentioned in the table. In order to achieve a satisfactory minimum oil service life (approx. 500 Oh) a suitably large lubricating oil reservoir must be fitted, as designed by GE Jenbacher. For plants using heat recovery, care must be taken to ensure that the acid dew point in the waste heat boiler - taking partial load operation into account - is exceeded.

[7] In mixtures or gasses, where the hydrocarbons form solid, liquid or highly viscous products when the mixture or gas cools down below the dew point, the condensation or sublimation products are described as tar. This affects all hydrocarbons ($C_xH_yR_z$) with 6 or more carbon atoms and a molar mass (M) ≥ Benzol (78.11 g/mol) with every possible substitution group (R_z).

When condensing out, tars can cause problems in the gas or mixture-side inlet tract.

If tars condense or sublimate in components in contact with the gas or mixture, the following are among the problems that may arise:

- Locking of the fittings (filters, pressure regulators, solenoid valves, etc.) in the gas train
- Locking of the gas mixer and compressor impeller on the exhaust gas turbocharger
- Locking of the intercooler
- Etc.

If the gas temperature is above 40°C, the addition of cold combustion air can reduce the mixture temperature so much that it falls below the tar dew point, even though this is 5°C below the gas temperature. In this case, the gas dew point must be correspondingly lower to avoid condensates and/or sublimates in components in contact with the gas or mixture!

ATTENTION:

The consequences of condensed and/or sublimated tars include shorter service life of components, increased maintenance costs and limited engine operation!

[8] Condensate or sublimate in the area where gas/air is added to the mixture (gas mixer) can sometimes also be caused by combustion air which is too cold. In this case, the problem can be remedied if the customer takes measures to preheat the combustion air!

3.2.1 Sample calculation for converter gas (LD gas)

Main gas components	Value	Unit
Acetylene	< 0,1	%Vol
Higher-value HC (> C_5H_{12})	< 0,2	%Vol
CO	67,75	%Vol
N_2	13,21	%Vol
CO_2	16,22	%Vol
H_2O	2,52	%Vol

GE Proprietary Information: CONFIDENTIAL! Use or disclosure of data contained on this sheet is subject to the restrictions on the cover or on the first page.

Trace and accompanying elements	Value	Unit
H_2S	80	ppm
HF	7,1	mg/10kWh
HCl	4,0	mg/10kWh

Gas characteristics	Value	Unit
Lower calorific value	2,38	kWh/Nm3

Table 3: Composition of a typical steel plant gas

Sulphur:

Step 1: conversion of measured value in ppm to mg/Nm3, in relation to H2S

S'_1 [mg / Nm³]= 80 [ppm] x 1.52 [kg / Nm³] S'_1= 122 mg/Nm³

Step 2: conversion of the value in relation to H2S to the limited sulphur value in mg/Nm³

	Sulphur molar mass		32
S' [mg / Nm³]=	———————— x S'_1	S' [mg / Nm³]=	— x 122 [mg / Nm³]
	H2S molar mass		34
S'_1= 115mg/Nm³			

Step 3: conversion of measured value in mg/Nm³ to comparable value mg/10 kWh

$$S = \frac{115\ [mg / Nm^3]}{2.38\ [kWh / Nm^3]} \times 10 \quad \rightarrow \quad S = 483\ mg/\ 10\ kWh \quad \text{actual value}$$

Step 4: comparison of actual and setpoint value

Without catalytic converter ➔ S_G=700 mg/ 10 kWh $S < S_G$ ➔ OK

Hydrofluoric and hydrochloric acid

Step 1: calculation of the total quantity of chlorine

$$Cl\ [mg / 10\ kWh] = \frac{\text{Chlorine molar mass}}{\text{HCl molar mass}} \times Cl' \qquad Cl\ [mg / 10\ kWh] = \frac{35{,}4}{36{,}4} \times 4\ [mg / 10\ kWh]$$

Cl= 3.9 [mg / 10 kWh]

GE Proprietary Information: CONFIDENTIAL! Use or disclosure of data contained on this sheet is subject to the restrictions on the cover or on the first page.

Step 2: calculation of the total quantity of fluoride

$$F\ [mg / 10\ kWh] = \frac{\text{Fluorine molar mass}}{\text{HF molar mass}} \times F' \qquad F\ [mg / 10\ kWh] = \frac{19}{20} \times 7{,}1\ [mg / 10kWh]$$

F 6.7 [mg / 10 kWh]

Step 3: calculation of the total quantity of halogens

$$H\ [mg / 10\ kWh] = Cl + 2 \times F \qquad H\ [mg / 10\ kWh] = 3.9\ [mg / 10\ kWh] + 2 \times 6.7\ [mg / 10\ kWh]$$

H= 17.3 [mg / 10 kWh]

Step 4: comparison of actual and setpoint value

Without catalytic converter ➔ H_G=100 mg/ 10 kWh $H < H_G$ ➔ OK

In principle, these sample calculations apply to all limit levels indicated in mg/10kWh.

Checklist for fuel gas quality information:

General information

Name of the project or the plant:	
Location (country and/or city) of the plant:	
Name of the contact person:	
Telephone number:	
Type and origin of the gas:	

Physical fuel gas characteristics

Gas pressure (from – to)	-	mbar(o)
Gas temperature (from – to)	-	°C
Rel. gas moisture content (from – to)	-	%
Atmospheric pressure (from – to)	-	mbar

Chemical fuel gas characteristics

Main components:	**%Vol:**	**Measurement method:**
Methane CH_4:		
Ethane C_2H_6:		
Propane C_3H_8:		
Butane C_4H_{10}:		

GE Proprietary Information: CONFIDENTIAL! Use or disclosure of data contained on this sheet is subject to the restrictions on the cover or on the first page.

Chemical fuel gas characteristics

Pentane C_5H_{12}:		
Hexane C_6H_{14}:		
Carbon monoxide CO:		
Hydrogen H_2:		
Carbon dioxide CO_2:		
Nitrogen N_2:		
Oxygen O_2:		
Other:		

Additional information

Trace elements:		**Quantity**	**Unit**	**Measurement method:**
Ammonia NH_3:			mg/10kWh	
Total chlorine:			mg/10kWh	
Total fluorine:			mg/10kWh	
Prussic acid HCN:			mg/10kWh	
Hydrogen sulphide H_2S:			mg/10kWh	
Dust volume	< 3 µm		mg/10kWh	
	> 3 µm		mg/10kWh	
Acetylene C_2H_2:			%Vol	
Carbonyl sulphide COS:			%Vol	
Tar [9]	Benzol		mg/10kWh	
	Naphthalene		mg/10kWh	
	Tar dew point		°C	

[9] Need only be specified in the case of tar-containing gases such as wood gas, coke-oven gas, etc!

Other information:

GE Jenbacher **recommends that you only use analysis institutes with which they are familiar.**

GE Proprietary Information: CONFIDENTIAL! Use or disclosure of data contained on this sheet is subject to the restrictions on the cover or on the first page.

4 Appendix I / Explanatory notes

4.1 Remarks

Unlike petrol and diesel fuels, gaseous fuels generally do not have to comply with strict specifications or classifications. In principle, all gaseous fuels which can be used in combustion engines can be classified as “fuel gases”.

The physical and chemical characteristics of gaseous fuels can vary enormously. However, from the point of view of construction and operating processes, the engines are designed to function within a very strict range of characteristics and are often very sensitive to changes to these characteristics.

The engine system is optimally designed to accommodate the contractually defined fuel-gas composition for which it was sold. If significant changes occur, particularly where fuel gas limit levels are exceeded, this can have an adverse effect on engine operation.

If it becomes clear or if the possibility exists that changes will occur in the fuel gas characteristics in the course of time, the customer should notify GE Jenbacher accordingly.

The limiting values as indicated in this TI are based on extensive experience on the part of GE Jenbacher and offer a basis for uninterrupted operation.

GE Jenbacher offer their clients comprehensive information and advice.

4.2 Fuel gas composition and characteristics

Fuel gases are normally made up of several components which can be divided into two classes, i.e. main components and trace elements.

The main components determine the relevant fuel characteristics for the physical engine operation (e.g. calorific value, combustion air ratio, combustion temperature, laminary flame propagation speed, ignition limits, knock resistance). These are usually expressed as % Vol.

Trace and accompanying elements usually enter the gas during the gas formation process. They are usually impurities in the ppm range. Unlike the effects of main components, the effects of trace or accompanying elements do not become noticeable until the engine has been operational for a certain time (cumulative effect).

As these effects are usually negative, fuel gases should be free of trace and/or accompanying elements. Where very substantial amounts of accompanying elements are present, a suitable fuel gas cleaning system is the best method for guaranteeing efficient use of the fuel gas.

To determine the suitability of a fuel gas for use in combustion engines, comprehensive knowledge of the gas analysis is required.

Practical experience shows that even results which were obtained in the same operating conditions can vary substantially. The effect of trace elements can therefore only be predicted to a certain extent, as very complex interrelationships and cause/effect relationships are often involved.

GE Jenbacher cannot acknowledge warranty claims related to problems caused by exceeding one or more of the limiting values mentioned in this TI.

4.2.1 Main components

Apart from a number of limiting conditions relating to the data sheet, the technical specifications also contain the fuel gas type.

GE Proprietary Information: CONFIDENTIAL! Use or disclosure of data contained on this sheet is subject to the restrictions on the cover or on the first page.

In cases where the available fuel gas does not conform to what is stated in the standard product range, a special - customer-specific - solution can be arranged, taking into account all technical and efficiency-related options.

It is normal for the composition of some gas types to vary substantially. In Leanox-controlled engine operation (under load) these variations can largely be compensated for by the engine management. In order to guarantee a satisfactory starting behaviour, however, for certain ranges the engine management must have available suitable/usable information (e.g.: calorific value, CH_4 content) on the current gas quality.

4.2.2 Trace and accompanying elements

In principle, the effects of trace elements are proportional to the total amount of elements that were fed into the engine during the operating time. When using a fuel gas with a high calorific value, the gas flow to the engine is smaller compared to a gas with a lower calorific value. As a result, the amount of trace elements fed into the engine - and therefore their effect - differs in the event of identical concentrations of trace elements in the fuel gas. In order to be able to compare various gases, the trace element concentration values must be compared to a certain fuel gas energy amount (the fuel gas output required to generate a certain engine output is very similar for all gas types).

GE Jenbacher have therefore set the energy content of 1 standard cubic metre of methane at 10 kWh (rounded off).

GE Proprietary Information: CONFIDENTIAL! Use or disclosure of data contained on this sheet is subject to the restrictions on the cover or on the first page.

1 Scope

This TI specifies the type of safety signs to be affixed to the engine room door and their location. You must also comply with any relevant official instructions regarding signage.

2 Operating area sign/safety signage

The pictograms are explained in full in the safety instructions.

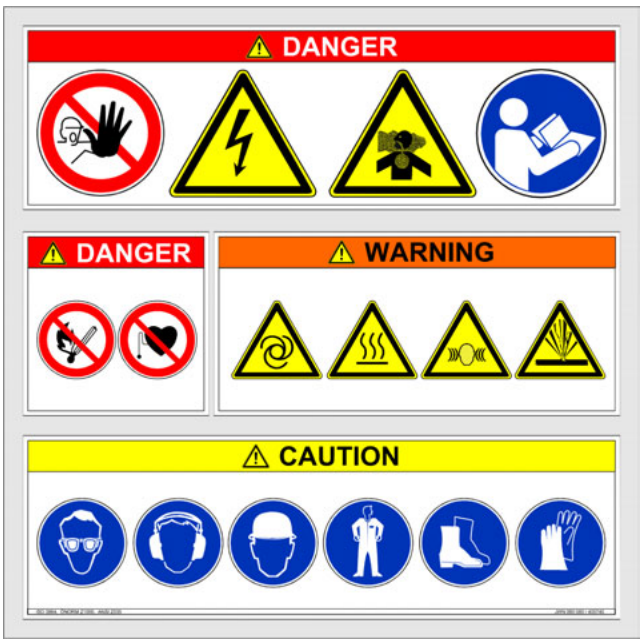

If the **fuel gas contains CO**, the following pictogram must also be affixed.

Refer to the results of the gas analyses!

The signage can be ordered from GE Jenbacher.

3 Affixing

All doors leading to the engine room must be identified with an operating area sign or provided with a safety sign.

The signs must be affixed to the top half of the engine room door.

In exceptional cases, they may be located at the same height and within an area extending 80 cm from the opening side of the engine room door.

GE Proprietary Information: CONFIDENTIAL! Use or disclosure of data contained on this sheet is subject to the restrictions on the cover or on the first page.

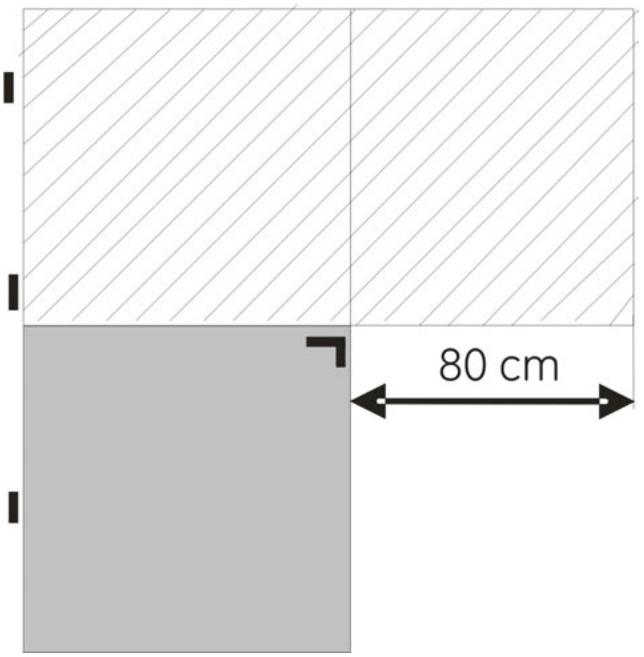

Signed area

GE Proprietary Information: CONFIDENTIAL! Use or disclosure of data contained on this sheet is subject to the restrictions on the cover or on the first page.

1 Importance of measures for ensuring Electromagnetic Compatibility (EMC) 1
2 Anti-interference measures 1
3 Earthing/shielding treatment on the shielding guide 8

1 Importance of measures for ensuring Electromagnetic Compatibility (EMC)

Importance of measures for ensuring Electromagnetic Compatibility (EMC)

The cabling and the earthing principles are the elements of a system that are mainly responsible for decoupling sufficiently the existing interference sources from potentially susceptible devices.

For this reason, any measures taken to eliminate interference must principally involve the cabling and the earthing principles.

2 Anti-interference measures

Earthing of inactive metal parts

Proper earthing is a major factor in ensuring interference-free assembly.

"Earthing" means the conductive connection of all inactive metal parts (VDE 0160).

The principle of surface earthing must be generally applied.

All conductive inactive metal parts must be earthed!

The following must be observed when earthing:

All earth connections must be low-impedance.

Large surface areas of all metal parts must be connected.

Always use especially wide earthing strips to make the connection. It is not only the cross-section of earth connections that is of key importance but also their surface.

(As a rule, do not use aluminium as there is a danger of oxidation!)

Screwed connections must always be made with split washers or serrated lock washers.

Shielding of equipment

Cabinets and housings are included in order to shield the control system. Please read the following tips.

Overlapping cabinet covers, including side sections, rear walls, roof and ground sheets must be earthed at regular intervals.

GE Proprietary Information: CONFIDENTIAL! Use or disclosure of data contained on this sheet is subject to the restrictions on the cover or on the first page.

Doors must additionally be connected to the cabinet earth by way of earthing measures. Use several earthing strips for this.

Lines exiting from the shielding housing must be shielded or led through a filter.

If there are sources of strong interference in the cabinet, they must be isolated from sensitive electronic parts with sheets. These sheets must be screwed to the cabinet earth in several places to produce a low-impedance.

The interference voltages which are coupled into the automation device via signal and supply lines are deflected to the central earthing point (standard mounting rail).

The central earthing point must be connected to the PE bus (earthing bar) with low-resistance and with as short a Cu-conductor as possible (≥ 10 mm²).

Shielding of lines

Cables with braided shields must be used!

As a rule, shielded lines must always be connected to both sides of the cabinet potential to ensure good conductivity. Proper interference suppression of all coupled frequencies can only be achieved with shielding on both sides. Place the shielding over a large area on the shielding guide and then lead it to the modules.

The interference currents on cable shielding will be deflected to earth at PLCs via the shielding guide and then via the equipotential bonding conductors. To make sure that these deflected currents do not become sources of interference themselves, the interference currents must be earthed via a low-resistance and low-impedance path, as follows:

Tighten the mounting bolts of cable connectors, modules and equipotential bonding conductors.

Protect contact surfaces of equipotential bonding conductors from corrosion.

Lay equipotential bonding conductors over as short a distance as possible and following a direct route.

Cableways

Wiring arrangement inside cabinets

When cabling a cabinet, the arrangement of the lines is very important to ensure the interference immunity (electromagnetic compatibility) of the system

The lines are divided into three wiring groups:

GE Proprietary Information: CONFIDENTIAL! Use or disclosure of data contained on this sheet is subject to the restrictions on the cover or on the first page.

Wiring Groups

Wiring group 1:

- shielded data lines (data bus cables, etc.)
- shielded analogue lines
- unshielded lines for DC and AC ≤ 60 V
- unshielded lines for DC and AC ≤ 230 V

Wiring group 2:

- unshielded lines for DC and AC > 60 V and ≤ 230 kV

Wiring group 3:

- unshielded lines for DC and AC > 230 V and ≤ 1 kV
- (generator power cable, lines for three-phase current controls, etc.)

Cableways

All wiring groups must be laid separately in the cabinet. The wiring arrangement means laying wires in separate cable ducts
separate cable bundles.

Information

Maintain a minimum distance of 10 cm between signal lines and power cables with ≥ 115/230 VAC.

When laying shielded lines, place the shield at the cabinet entrance on the shield reception bus.

Wiring arrangement outside cabinets

Outside cabinets (but inside buildings) lay the lines on metal cable trays. The joints of the cable trays should be galvanically connected to each other and must be locally earthed every 20 to 30 m.

As a rule, shielded cables must be used for analogue signal lines!

Wiring Groups

Wiring group 1 (LG1):

- shielded analogue lines

GE Proprietary Information: CONFIDENTIAL! Use or disclosure of data contained on this sheet is subject to the restrictions on the cover or on the first page.

- unshielded lines for DC and AC ≤ 60 V
- unshielded lines for DC and AC ≤ 230 V

Wiring group 2 (LG2):

- unshielded lines for DC and AC > 60 V and ≤ 230 V

Wiring group 3 (LG3):

- unshielded lines for DC and AC > 230 V and ≤ 1 kV.

(generator power cable, lines for three-phase current controls, etc.)

Cableways

Each cable group should be laid in separate cable trays (cable runs, cableways, cable ducts, underground cable conduits).

Cables of different wiring groups must be laid at least 10 cm apart (when placing AEG-MODICON PLCs the WG1 cable must be laid at least 50 cm from the WG3 cables), except if they are laid in separate conduits or ducts or separated from each other by special rigid sleeves.

Minimum distances must also be observed at crossovers and points of proximity.

Cables sensitive to electromagnetic interference must be installed at least one metre from possible sources of interference (contactors, transformers, motors, electric welders, electric starters, etc.).

Cables sensitive to interference are:

- data bus cables
- video cables
- keyboard cables
- printer cables
- analogue signal cables

Where two control components are connected by more than one signal cable, ensure that the distance between the cables is as short as possible.

Lay the signal cable and relevant equipotential bonding conductor as close together as possible. Lay the signal cable and equipotential bonding conductor **via the shortest possible cabling route**.

Lay individual cables with similar signals (supply and return lines, power supply cables) as close together as possible, if necessary twisting them together.

Lay all cables close to earth connections.

GE Proprietary Information: CONFIDENTIAL! Use or disclosure of data contained on this sheet is subject to the restrictions on the cover or on the first page.

Avoid extending cables via terminals or similar devices.

Additional instructions for laying data transfer cables. (The cables below are always supplied and connected by GE Jenbacher):

ET100 – data bus cable

a) Lay separately from all other cables.

b) Minimum distance from LG3 cables ≥ 10 cm.

c) Earth as close as possible to the cabinet entrance (earth clip). Continue the shielding as far as the interface connector without earthing again. (c) will be carried out by GE Jenbacher!)

SINEC data bus cable:

a) Lay separately from all other cables.

b) Minimum distance from LG3 cables ≥ 10 cm.

REMOTE I/O cable for dia.ne:

a) Lay separately from all other cables.

b) Minimum distance from LG2 and LG3 cables ≥ 10 cm.

c) Earth as close as possible to the cabinet entrance (earth clip). Continue the shielding as far as the interface connector without earthing again. (c) will be carried out by GE Jenbacher!)

Video, keyboard and printer cables:

a) Lay separately from all other cables.

b) Minimum distance from LG3 cables ≥ 10 cm (> 50 cm for AEG MODICON PLCs).

c) Strain relief in the control cabinet with the aid of the earth clips provided. (c) will be carried out by GE Jenbacher).

General shielded lines:

a) Minimum distance from LG3 cables ≥ 10 cm (> 50 cm for AEG MODICON PLCs).

b) Strain relief in the control cabinet in the sections provided.

c) Shielding to be earthed as close as possible to the cabinet entrance (shielding guide) with the aid of the earth clips provided. (b) and c) will be carried out by GE Jenbacher!)

General wiring guidelines:

Generator power cable:

The diameter of the power cables must be determined or checked in accordance with VDE 298, Parts 1-4 (cabling method, bundled cables, etc.) or ÖVE L-20 or IEC 364-5-523 by the company carrying out the work. Rated generator current: IN = ... A, where cos phi = 0.8.

GE Proprietary Information: CONFIDENTIAL! Use or disclosure of data contained on this sheet is subject to the restrictions on the cover or on the first page.

Only **flexible** cables are permitted.

The cables used must conform to current harmonised and national standards. The cables to be laid must be suitable for their intended purpose and the laying method used; they must be capable of withstanding specific local conditions.

Use only metal cable trays (also in existing concrete cable channels). All the assembly materials (including screws) must be properly protected against corrosion.

The cables must be numbered in accordance with the cable list.

Pay attention to the curving radius of the cables.

Cable entries must counter tensile forces. Where twisted nipples are used, additional strain relief should be provided. Use only one cable per screw fixing.

The protection class of each device to be connected must be complied with.

All screw connections on the generator must be suitable for the power cable used.

Where cables are to be laid on a cable tray or cableway, they must be adjusted, secured, relieved of stress and if necessary covered by a protective plate. Once laid, single-wire high-voltage cables (NYY-E YY) must be secured so as to withstand short-circuits.

Third party cabling requirements for GE Jenbacher **electrical distribution systems**

Generator power cable:

The diameter of the power cables must be determined or checked in accordance with VDE 298, Parts 1-4 (cabling method, bundled cables, etc.) or ÖVE L-20 or IEC 364-5-523 by the company carrying out the work. Rated generator current: IN = ... A, where cos phi = 0.8.

(Recommended cable for medium-voltage generators: SIEMENS PROTOLON, type: NTMCGCWÖU).

GE Proprietary Information: CONFIDENTIAL! Use or disclosure of data contained on this sheet is subject to the restrictions on the cover or on the first page.

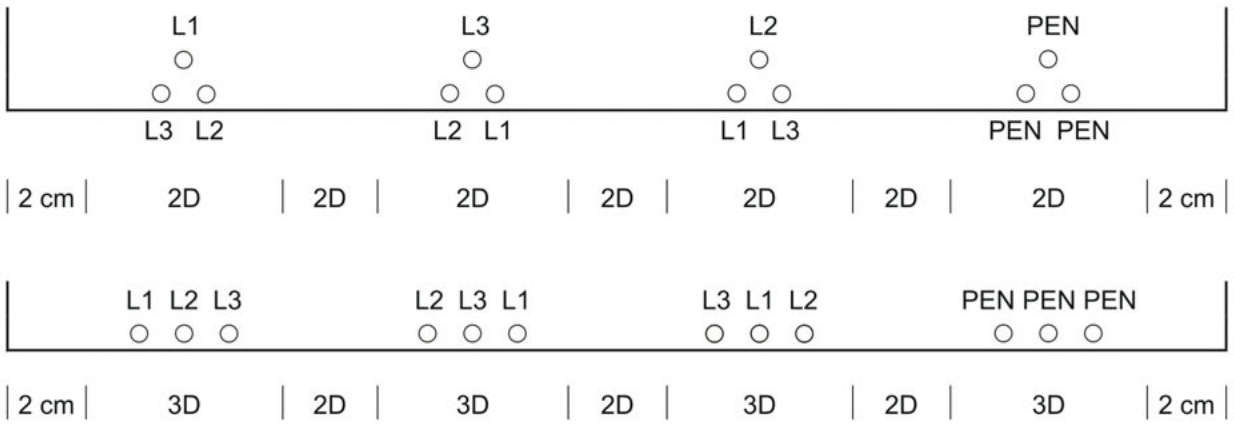

D = Diameter of cable

The risk of fire inside cable ducts and, in the case of bundled cables, inside buildings will be reduced by choosing a suitable cabling method and by taking preventive measures to minimise the spread and consequences of fire.

An insulation test must be carried out on completion of the work.

Insulation resistance tests in accordance with EN / IEC 60204-1 (Section 18.3) and HD 60364-6 / IEC 60364-6 and local regulations.

A report must be drawn up on the tests carried out, containing the required test results including information on the measuring instruments used.

This test port must be handed over to the customer.

⚠ **Generator cables must be disconnected from the generator before their insulation resistance is tested.**

The same applies to frequency converters.

The work must be carried out strictly in accordance with the relevant regulations and standards.

The company carrying out the work must be present during the testing and commissioning of the plant so that any problems arising can be rectified immediately.

The company is liable for the satisfactory completion of its work, i.e. it undertakes to rectify any defects free of charge.

GE Proprietary Information: CONFIDENTIAL! Use or disclosure of data contained on this sheet is subject to the restrictions on the cover or on the first page.

All components of the electrical system supplied by GE Jenbacher must be installed and secured in a suitable manner according to the plant layout plan, i.e. the control cabinets must be positioned and screwed together and the batteries and chargers must be installed.

3 Earthing/shielding treatment on the shielding guide

Earthing/shielding treatment on the shielding guide:

Earthing

Ensure that the earth connection is electrically sound with a split washer or serrated lock washer (anti-corrosion treatment) ①.

Lay earthing lines by the shortest route.

Partitioning with separating plates is necessary for the part of the cabinet in which the inductors (especially transformers, valves and connectors) have been fitted.

Partition plates must be connected to the cabinet (earth) and electrically sound.

If powerful interference sources (EMC) have been installed in the cabinet (e. g. frequency converter, etc.), their shielding housings must be connected separately to the central earthing point (> = 10 mm2).

Shielding treatment on the shielding guide

Lay shields so that they are spread out as far as possible and use suitable shield clamps.

Connect shielding guide to assembly plate or cabinet housing so that it is properly conductive.

Pull the braiding back over the cable insulation ②.

Twist relevant signal feed and return lines ③.

Keep the shield connection as short as possible ④.

GE Proprietary Information: CONFIDENTIAL! Use or disclosure of data contained on this sheet is subject to the restrictions on the cover or on the first page.

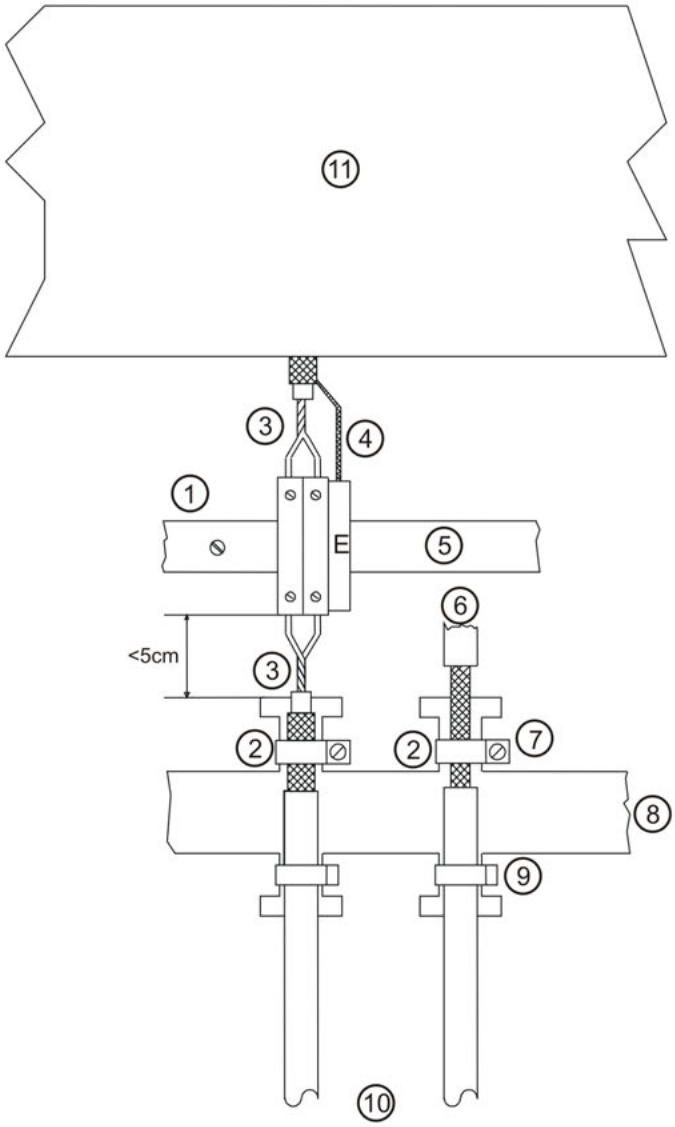

⑤	terminal strip	⑨	Cable ties - strain relief
⑥	to PLC BG	⑩	Cable with braiding
⑦	Earth clip	⑪	Cable duct
⑧	Shielding guide		

GE Proprietary Information: CONFIDENTIAL! Use or disclosure of data contained on this sheet is subject to the restrictions on the cover or on the first page.

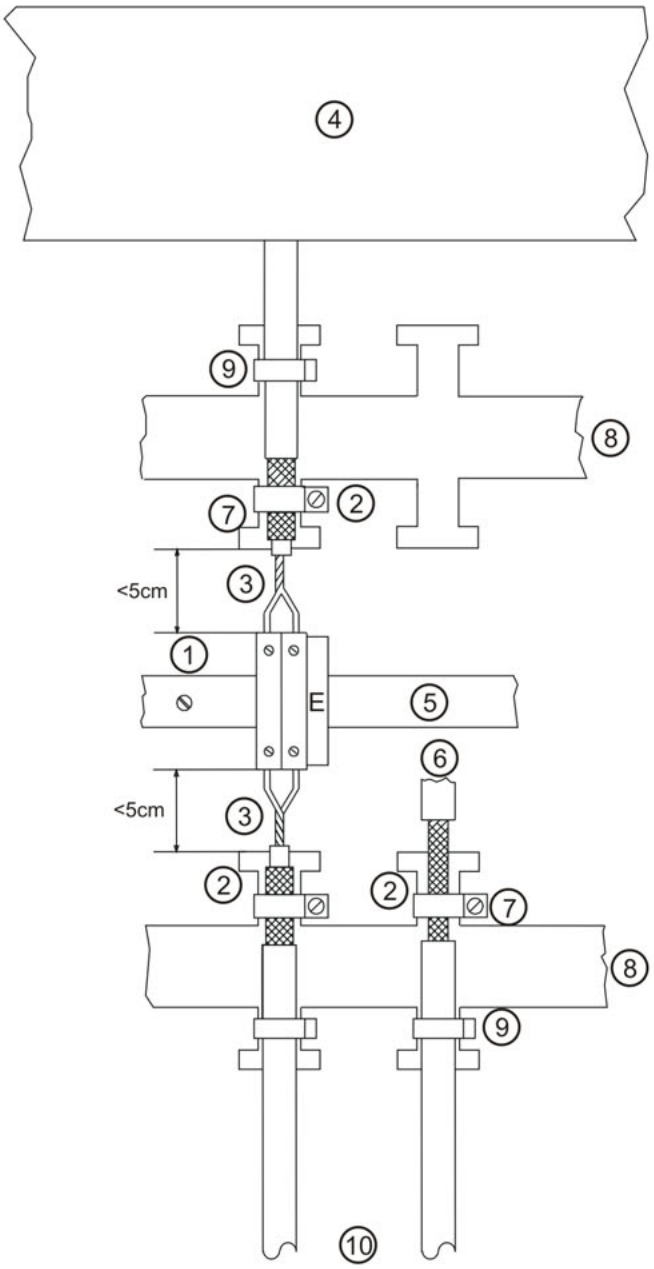

④	Cable duct	⑧	Shielding guide
⑤	terminal strip	⑨	Cable ties - strain relief
⑥	to PLC BG	⑩	Cable with braiding
⑦	Earth clip		

GE Proprietary Information: CONFIDENTIAL! Use or disclosure of data contained on this sheet is subject to the restrictions on the cover or on the first page.

1 General

Very low-powered electronic components are particularly susceptible to external influences, e.g. electrostatic charges, magnetic fields, mechanical stresses, etc.

2 Replacement of modules

Modules must never be connected or disconnected when they are live, i.e. modules may only be installed or removed when the supply voltage for the central unit and the signal transmitters has been switched off.

When replacing modules or using them for the first time, always check the following:

- that it is the correct module type (stock number/supply voltage)
- that it is in the correct slot (documentation)
- that it has been assembled correctly (e.g. EPROMs)
- that bridges and coding circuits have been correctly adjusted (documentation)
- that the version of software is appropriate and up-to-date

3 Commissioning

If you bring an electronic module into the service room from a cooler environment, you will have to wait, depending on the difference in temperature, until any condensation has dried up before commissioning it.

4 Handling of electrostatic sensitive devices (ESD)

4.1 Definition of terms

Electrostatic sensitive devices (ESD) are all electronic semiconductors and devices and modules consisting of semiconductors which are not protected against electrostatic charges by suitable housings.

4.2 Basic rules for protecting against electrostatics

a) All electrostatic sensitive devices must only be handled in a workplace which is protected against electrostatics!

b) They must only be stored and transported in protected packing and transportation materials!

c) Suppliers must also observe these rules, i.e. ESDs received from suppliers in packing units inadequately protected against electrostatic charging must be returned to the supplier immediately.

4.3 Labelling

ESDs can be packed for transport in electrostatically conductive protective packs and identified as ESDs by means of clearly visible stickers e.g.

Caution: Electrostatic sensitive devices (ESD)

GE Proprietary Information: CONFIDENTIAL! Use or disclosure of data contained on this sheet is subject to the restrictions on the cover or on the first page.

Parts packed and marked in this way must only be opened and handled by suitably trained personnel in **a workplace protected against electrostatics.**

4.4 Measures to protect against electrostatic charging

In order to protect a workplace against electrostatics, you must prevent electrostatic charging occurring and dissipate existing charges quickly and safely.

This is achieved by special conductive protection mats (connected to earth) on the work surface (panel/base of switchgear cabinet) and by wrist bands worn by staff (1 MOhm-safety resistance connected to earth).

GE Proprietary Information: CONFIDENTIAL! Use or disclosure of data contained on this sheet is subject to the restrictions on the cover or on the first page.

1 Purpose **1**
2 General **1**
3 Protective arrangements - classification and use **1**
3.1 Protection against direct contact 1
3.2 Protection in the case of indirect contact 1
4 Reference sources **2**

1 Purpose

To test the protection against shock currents (protective arrangements) when installing electrical equipment with nominal voltages of up to ~ 1000 V.

2 General

Each plant must be inspected and tested during and/or on completion of installation before it is commissioned by the user and measurements must be carried out.

The protective arrangements must be checked before the plant is first commissioned (original inspection) and before re-commissioning.

It is stressed that all regulations governing the protective arrangements (hitherto specific to each country) must be adhered to.

All those companies or operatives engaged in the setting up or installation of the above systems, who are subject to legislation other than that of Austria, must of course act strictly in accordance with the regulations by which they are bound.

Furthermore, it is emphasised that the first electrical commissioning, especially the protective arrangements check, may only be carried out by specialist staff who have received appropriate training.

3 Protective arrangements - classification and use

The protective arrangements are classified as those which offer protection against direct contact (basic protection) and those which offer protection against indirect contact (fault protection) and additional protection.

3.1 Protection against direct contact

In the case of normal electrical equipment, protection against live parts is achieved by combining protection by insulation and protection by covering. It must only be possible to open or remove covers using a tool or key, unless either the equipment is shut down before the covers are opened or removed, or there are additional suitable barriers inside.

3.2 Protection in the case of indirect contact

This form of protection, which is intended to prevent dangerous voltages from coming into contact with parts which should not normally carry operational voltages but which have been made live through damage to the basic insulation, may be classified as follows:

Protective arrangements without earth-protection conductor:

GE Proprietary Information: CONFIDENTIAL! Use or disclosure of data contained on this sheet is subject to the restrictions on the cover or on the first page.

- Protective insulation
- Protective low voltage (Functional low voltage)
- Protective isolation of one or more pieces of equipment using equipotential bonding conductors

Protective arrangements with earth-protection conductor:

- Protective earth
- Protective multiple earthing, neutralisation
- Current-operated earth-leakage circuit-breaker system
- Protective conductor system

Systems supplied by GE Jenbacher are always provided with protective arrangements in the form of protective conductors. The choice of fault protection is determined by the local conditions. The on-site power supply in particular is a deciding factor in the choice of protective arrangements which may be used in the case of indirect contact. In relation to neutralisation, this situation must be emphasised, especially, because the neutralisation conditions in the distribution network and the consumer unit also have to conform to the regulations. Only the local electricity supply company can decide whether this is the case in the distribution network and neutralisation may be used.

If specific types of electrical equipment or electrical operating areas are subject to additional or more stringent rules or exceptions under the applicable regulations, they will take precedence over the general regulations in this regard.

4 Reference sources

- ÖVE-EN 1 Part 1/1989, Part 1a/1992, Part 1b/10.95
- VDE 0100 Part 410/01.97
- VDE 0100 Part 610/04.94
- EN 60 439 Part 1
- Reference book: "Schutz gegen gefährliche Körperströme und gegen Überspannungen" [Protection against shock currents and overvoltages] - Bieglmeier/Mörx - seventh edition

GE Proprietary Information: CONFIDENTIAL! Use or disclosure of data contained on this sheet is subject to the restrictions on the cover or on the first page.

1 General

When selecting a lubricating oil suitable for use in GE Jenbacher gas engines, account must be taken of the engine's requirements and the requirements related to the fuel gas and - possibly - the exhaust gas treatment unit.

2 Effects on the lubricating oil and the oil service life

Fuel gases contain trace and accompanying elements which can cause deposits in the combustion chamber, acid attack of components and wear.

Experience shows that the following harmful substances have the greatest effects on the lubricating oil and the oil service life:

Chlorine, fluoride, sulphur cause the lubricating oil to acidify, and
Organic silicon compounds cause wear.

Accordingly, fuel gases can be divided in the following classes:

- **Class A: Class A: natural gas and gases that permanently fulfil the limitations regarding trace and accompanying elements in acc. with TI 1000-0300, TI 1000-0301 and TI 1000-0302**
  Natural, Associated Petroleum, mine gas, biogas (sulphur < 200 mg/10 kWh), special gases (thermoselect and steel plant gases).
- **Class B: gases containing acid-forming trace elements or trace elements that primarily affect the oil condition**
  Biogas, sludge gas, wood gas and/or pyrolysis gases.
- **Class C: gases containing acid-forming trace elements and additional trace elements causing wear**
  Landfill gas

Lubricating oil can lose its corrosion protection characteristics due to impurities in the fuel gas. The results of regular lubricating oil analyses are indicative of fuel gas impurities. In this respect, please refer to the following Technical Instructions:

TI no. 1000-0112

TI no. 1000-0099 A, B, C, D and K.

3 Lubricating oil requirements for GE Jenbacher type 2 and 3 engines

SAE 40

additives suitable for spark-ignition gas operation.

Release procedure successfully completed in acc. with TI 1000-0099A.

GE Proprietary Information: CONFIDENTIAL! Use or disclosure of data contained on this sheet is subject to the restrictions on the cover or on the first page.

Selection overview

A, B, C:	Class fuel gas
[CAT]:	with catalytic converter for formaldehyde conversion included in GE Jenbacher scope of supply

	A	B	C	[CAT]
Mobil	Pegasus 705 Pegasus 805 **Pegasus 1005****	Pegasus 710	Pegasus 610	Pegasus 705
bp	Energas NGL	Energas NGL Energas LFM	Energas LFM	
Castrol	Duratec L	Duratec L Duratec MX	Duratec MX	
	Mysella LA 40 **Shell Mysella XL 40***	Mysella MA 40	Mysella MA 40	Mysella LA 40 Mysella XL
PETRO-CANADA	**Sentron LD 5000***			
Chevron	Geotex LA SAE 40 HDAX Low Ash Gas Engine Oil SAE 40	HDAX LFG Gas Engine Oil SAE 40	HDAX LFG Gas Engine Oil SAE 40	HDAX Low Ash Gas Engine Oil SAE 40
	Texaco Geotex LA SAE 40 Texaco HDAX Low Ash Gas Engine Oil SAE 40	Texaco Geotex LF SAE 40 Texaco HDAX LFG SAE 40	Texaco HDAX LFG SAE 40	Texaco HDAX Low Ash Gas Engine Oil SAE 40
CALTEX	Geotex LA SAE 40 HDAX Low Ash Gas Engine Oil SAE 40	Geotex LF SAE 40 HDAX LFG Gas Engine Oil SAE 40	HDAX LFG Gas Engine Oil SAE 40	HDAX Low Ash Gas Engine Oil SAE 40

GE Proprietary Information: CONFIDENTIAL! Use or disclosure of data contained on this sheet is subject to the restrictions on the cover or on the first page.

	A	B	C	[CAT]
TOTAL	Nateria MH 40	Nateria ML 406		
FUCHS	Titan Ganymet LA Titan Ganymet Ultra	Titan Ganymet plus Titan Ganymet Ultra	Titan Ganymet	
CEPSA	Troncoil Gas 40			
OMV	LEG 40	Gas HD 40		
Agip		AUTOL BGJ 40		
Q8 Oils	Mahler G4	Mahler HA	Mahler HA	
REPSOL	**Long Life Gas 4005*** Super Motor Gas 4005			
ROLOIL	Mogas G4	Mogas AC-40	Mogas AC-40	
Roloil	Mahler G4	Mahler HA	Mahler HA	

GE Proprietary Information: CONFIDENTIAL! Use or disclosure of data contained on this sheet is subject to the restrictions on the cover or on the first page.

	A	B	C	[CAT]
ADDINOL	MG 40 extra LA	MG 40 extra plus		
NILS		Burian SAE 40		
ENEOS	NOC ENEOS M40(M)			
TECTROL	Methaflexx NG Methaflexx HC Premium	Methaflexx HC plus Methaflexx HC Premi-um	Methaflexx D	
SRS SCHMIERSTOFF VERTRIEB GMBH		Mihagrun 40		
Valvoline	GEO LA 40			
CENEX		NGEO 2500 MA		
Zeller+Gmelin Printing Inks	Divinol Spezial Typ 4 SAE 40	Divinol Spezial HA SAE 40	Divinol Spezial HA SAE 40	

GE Proprietary Information: CONFIDENTIAL! Use or disclosure of data contained on this sheet is subject to the restrictions on the cover or on the first page.

	A	B	C	[CAT]
AVIA		Gasmotorenöl HA SAE 40		
EUROLUB OIL·CHEMIE·CARCARE	Gasmotorenöl HGM SAE 40			

** **Mobil Pegasus 1005** is suitable for prolonged oil-change intervals. Can be assessed following increased oil-limit values (see TI 1000-0099B).

* **Shell Mysella XL SAE 40** is suitable for prolonged oil-change intervals.

* **Petro Canada Sentron LD 5000** is suitable for prolonged oil-change intervals.

* **Repsol Long Life Gas 4005** s suitable for prolonged oil-change intervals.

4 Lubricating oil requirements for GE Jenbacher type 4 engines:

SAE 40

additives suitable for spark-ignition gas operation.

Release procedure successfully completed in acc. with TI 1000-0099A.

Selection overview

A, B, C:	Class fuel gas
[CAT]:	with catalytic converter for formaldehyde conversion included in GE Jenbacher scope of supply

	A	B	C	[CAT]
Mobil	Pegasus 705 Pegasus 805 Pegasus 1005	Pegasus 705 Pegasus 805	Pegasus SR Pegasus 605	Pegasus 705
bp	Energas NGL	Energas NGL		
Castrol	Duratec L	Duratec L		

GE Proprietary Information: CONFIDENTIAL! Use or disclosure of data contained on this sheet is subject to the restrictions on the cover or on the first page.

	A	B	C	[CAT]
FUCHS	Titan Ganymet Ultra			
	Mysella LA 40			Mysella LA 40
ENEOS	NOC Eneos M40(M)			
Q8 Oils	Mahler G4	Mahler G4		
REPSOL	Long Life Gas 4005 Super Motor Gas 4005			
ROLOIL	Mogas G4	Mogas G4		
Roloil	Mahler G4	Mahler G4		
TECTROL	Methaflexx HC Premium			
TOTAL	Nateria MH 40	Nateria MH 40	Nateria MH 40	

GE Proprietary Information: CONFIDENTIAL! Use or disclosure of data contained on this sheet is subject to the restrictions on the cover or on the first page.

	A	B	C	[CAT]
Valvoline	GEO LA 40			
OMV	Gas LEG 40			
Zeller+Gmelin	Divinol Spezial Typ 4 SAE 40	Divinol Spezial Typ 4 SAE 40		

5 Lubricating oil requirements for GE Jenbacher type 6 engines:

SAE 40

additives suitable for spark-ignition gas operation.

Release procedure successfully completed in acc. with TI 1000-0099A.

Selection overview

A, B, C:	Class fuel gas
[CAT]:	with catalytic converter for formaldehyde conversion included in GE Jenbacher scope of supply

	A	B	C	[CAT]
Mobil	Pegasus 705 Pegasus 805 Pegasus 1005	Pegasus 705 Pegasus 805	Pegasus SR Pegasus 605	Pegasus 705
bp	Energas NGL	Energas NGL	Energas NGL	
Castrol	Duratec L	Duratec L	Duratec L	

GE Proprietary Information: CONFIDENTIAL! Use or disclosure of data contained on this sheet is subject to the restrictions on the cover or on the first page.

	A	B	C	[CAT]
	Mysella LA 40 Mysella XL			Mysella LA 40
	Sentron LD 5000			
	HDAX Low Ash SAE 40			HDAX Low Ash SAE 40
	HDAX Low Ash Gas Engine Oil SAE 40			HDAX Low Ash Gas Engine Oil SAE 40
	Methaflexx HC Premium			
	Nateria MH 40	Nateria MH 40	Nateria MH 40	
	Titan Ganymet Ultra			
	HDAX Low Ash Gas Engine Oil SAE 40			HDAX Low Ash Gas Engine Oil SAE 40
	Mahler G4	Mahler G4		

GE Proprietary Information: CONFIDENTIAL! Use or disclosure of data contained on this sheet is subject to the restrictions on the cover or on the first page.

	A	B	C	[CAT]
REPSOL	Long Life Gas 4005 Super Motor Gas 4005			
ROLOIL	Mogas G4	Mogas G4		
Roloil	Mahler G4	Mahler G4		
ENEOS	NOC ENEOS M40(M)			
OMV	Gas LEG 40			
Zeller+Gmelin Printing Inks	Divinol Spezial Typ 4 SAE 40	Divinol Spezial Typ 4 SAE 40		

GE Proprietary Information: CONFIDENTIAL! Use or disclosure of data contained on this sheet is subject to the restrictions on the cover or on the first page.

1 Type 2, 3, 4 and 6 engines with DIA.NE 1
1.1 MANUAL operating mode 1
1.2 AUTOMATC operating mode 2
2 Engines with SAM 2
2.1 MANUAL operating mode 2
2.2 AUTOMATC operating mode 3
3 Type 9 engine 3
3.1 MANUAL operating mode 3
3.2 AUTOMATC operating mode 4

Other applicable Technical Instructions:

- **TI 2300-0001 Employee protection (PPE)**
- **TI 2300-0005 Safety Instructions**
- **TI 2300-0010 Lockout / Tagout (LOTO)**
- **TI 2108-0027 (J208 with SAM)**
- **TI 2108-0028 (J212 with SAM)**

When an engine is shut down for service and maintenance work, the central connections (compressed air starter, gas valves, starter motor battery) must be secured using Lockout/Tagout (LOTO).

1 Type 2, 3, 4 and 6 engines with DIA.NE

1.1 MANUAL operating mode

for a normal engine shutdown up to step 8, for an engine shutdown for service/maintenance up to step 13

1. Turn the operation mode selector switch to the position MANUAL
2. Reduce the power output to approx. 10 %
3. Turn the generator switch to the position OFF
4. Turn the synchronisation selector switch to the position Zero and lock it
5. Engine after-cooling: let the engine cool down in idling operation for a minute.
6. Press the Stop button after the after-cooling phase is completed
7. After-running of auxiliaries: up to 40 min
8. Turn the mode selector switch to the STOP position, shut the engine down and take out the key.
   Normal engine shutdown now completed.
9. Close the gas tap at the entry of the gas pressure control system
10. Put up a warning sign to prevent inadvertent starting

GE Proprietary Information: CONFIDENTIAL! Use or disclosure of data contained on this sheet is subject to the restrictions on the cover or on the first page.

11. Once all the auxiliaries have been automatically switched off, remove the negative battery terminal from the module frame, insulate the removed terminal cable and place it on the floor (LOTO)!
12. Isolate the main power circuit for auxiliaries, block it off and check whether the system is absolutely dead.
13. Check that all components are dead and sufficiently cooled off. Attention: Overpressure!

1.2 AUTOMATC operating mode

for a normal engine shutdown up to step 4, for an engine shutdown for service/maintenance up to step 9

1. Turn the activation mode selector to the position OFF
2. The engine will automatically shed its load and shut down.
3. After-running of auxiliaries: up to 40 min
4. Turn the mode selector switch to the STOP position, shut the engine down and take out the key.
   Normal engine shutdown now completed.
5. Close the gas tap at the entry of the gas pressure control system
6. Put up a warning sign to prevent inadvertent starting
7. Once all the auxiliaries have been automatically switched off, remove the negative battery terminal from the module frame, insulate the removed terminal cable and place it on the floor (LOTO)!
8. Isolate the main power circuit for auxiliaries, block it off and check whether the system is absolutely dead.
9. Check that all components are dead and sufficiently cooled off. Attention: Overpressure!

2 Engines with SAM

2.1 MANUAL operating mode

for a normal engine shutdown up to step 7, for an engine shutdown for service/maintenance up to step 13

1. Set MANUAL operating mode
2. Reduce the power output to approx. 10 %
3. Switch off the generator (OFF setting)
4. Engine after-cooling: let the engine cool down in idling operation for a minute.
5. Press the Stop button after the after-cooling phase is completed
6. After-running of auxiliaries: up to 40 min
7. Set STOP operating mode

GE Proprietary Information: CONFIDENTIAL! Use or disclosure of data contained on this sheet is subject to the restrictions on the cover or on the first page.

Normal engine shutdown now completed.

8. Close the gas tap at the entry of the gas pressure control system
9. Put up a warning sign to prevent inadvertent starting
10. Once all the auxiliaries have been automatically switched off, remove the negative battery terminal from the module frame, insulate the removed terminal cable and place it on the floor (LOTO)!
11. Press the Emergency Stop button and remove the key
12. Isolate the main power circuit for auxiliaries, block it off and check whether the system is absolutely dead.
13. Check that all components are dead and sufficiently cooled off. Attention: Overpressure!

2.2 AUTOMATC operating mode

for a normal engine shutdown up to step 4, for an engine shutdown for service/maintenance up to step 10

1. Turn the activation mode selector to the position OFF
2. The engine will automatically shed its load and shut down.
3. After-running of auxiliaries: up to 40 min
4. Set STOP operating mode

   Normal engine shutdown now completed.
5. Close the gas tap at the entry of the gas pressure control system
6. Put up a warning sign to prevent inadvertent starting
7. Once all the auxiliaries have been automatically switched off, remove the negative battery terminal from the module frame, insulate the removed terminal cable and place it on the floor (LOTO)!
8. Press the Emergency Stop button and remove the key
9. Isolate the main power circuit for auxiliaries, block it off and check whether the system is absolutely dead.
10. Check that all components are dead and sufficiently cooled off. Attention: Overpressure!

3 Type 9 engine

3.1 MANUAL operating mode

for a normal engine shutdown up to step 8, for an engine shutdown for service/maintenance up to step 13

1. Turn the operation mode selector switch to the position MANUAL
2. Reduce the power output to approx. 10 %
3. Turn the generator switch to the position OFF

GE Proprietary Information: CONFIDENTIAL! Use or disclosure of data contained on this sheet is subject to the restrictions on the cover or on the first page.

4. Turn the synchronisation selector switch to the position Zero and lock it
5. Engine after-cooling: let the engine cool down in idling operation for a minute.
6. Press the Stop button after the after-cooling phase is completed
7. After-running of auxiliaries: up to 40 min
8. Turn the mode selector switch to the STOP position, shut the engine down and take out the key.
   Normal engine shutdown now completed.
9. Close the gas tap at the entry of the gas pressure control system
10. Put up a warning sign to prevent inadvertent starting
11. Close the compressed air supply valve and secure against being opened inadvertently (LOTO)!
12. Isolate the main power circuit for auxiliaries, block it off and check whether the system is absolutely dead.
13. Check that all components are dead and sufficiently cooled off. Attention: Overpressure!

3.2 AUTOMATC operating mode

for a normal engine shutdown up to step 4, for an engine shutdown for service/maintenance up to step 9

1. Turn the activation mode selector to the position OFF
2. The engine will automatically shed its load and shut down.
3. After-running of auxiliaries: up to 40 min
4. Turn the mode selector switch to the STOP position, shut the engine down and take out the key.
   Normal engine shutdown now completed.
5. Close the gas tap at the entry of the gas pressure control system
6. Put up a warning sign to prevent inadvertent starting
7. Close the compressed air supply valve and secure against being opened inadvertently (LOTO)!
8. Isolate the main power circuit for auxiliaries, block it off and check whether the system is absolutely dead.
9. Check that all components are dead and sufficiently cooled off. Attention: Overpressure!

GE Proprietary Information: CONFIDENTIAL! Use or disclosure of data contained on this sheet is subject to the restrictions on the cover or on the first page.

1 Tips 1
2 Transport and installation 1
2.1 Lifting and transportation 2
2.2 Installation (requirements for arrangement surface) 2
3 Fuel gas 2
3.1 Fuel gas quality 2
3.1.1 Gas filters 2
3.1.2 Gas pipes and gas train 2
4 Lubricating oil 2
4.1 Lubricating-oil requirements 3
4.2 Oil piping 3
4.3 Oil system 3
5 Exhaust gas 3
6 Engine-cooling, warm and hot water 4
6.1 Hot water and warm water in heating systems 4
6.2 Requirements as to engine cooling water 4
6.2.1 Quality of cooling water in open circuits 4
6.3 Piping 4
7 Ventilation 5
8 Electrics 5
8.1 Protective measures for installing high-voltage circuits 5
8.2 Customer's control power supply 5
8.3 Starting system (Batteries) 5
8.4 EMC cabling and cable dimensions 5
8.5 Handling electronic components 5
8.6 Energy output cable at the generator 5
8.6.1 Low-voltage generators 6
8.6.2 Medium-voltage generators 7
8.7 Generator protection against high transient surge voltages 9
9 Employee protection 10
10 Technical Instructions, standards and guidelines 10
11 Installation documentation 11

1 Tips

Before performing any work on the installation, the maintenance staff must ensure that the relevant safety precautions have been observed regarding the activities to be carried out.

For safety precautions, please refer to the operation or maintenance description (TI No.: 2300-0005).

Always make sure to attach the negative pole as close as possible to the weld location when carrying out welding work on the module – not on the mass connection (earth cable) though.

2 Transport and installation

Deals with the lifting, transportation, unloading and installation of GE Jenbacher modules and switchgear cabinets

GE Proprietary Information: CONFIDENTIAL! Use or disclosure of data contained on this sheet is subject to the restrictions on the cover or on the first page.

2.1 Lifting and transportation

TI 1000-0042

TI 1000-0043

TI 1000-0044

2.2 Installation (requirements for arrangement surface)

TI 1000-0041

3 Fuel gas

Describes requirements for fuel gas (in terms of mechanical and chemical characteristics) and gas piping.

3.1 Fuel gas quality

TI 1000-0300

TI 1000-0301

TI 1000-0302

TI 1400-0091

TI 1100-0110

3.1.1 Gas filters

A work filter (3µm) has been incorporated into the gas pressure control line of **type 2, 3, 4 and 6 engines** as standard.

3.1.2 Gas pipes and gas train

TI 1100-0110

Gas piping to be dimensioned such that the requisite gas prepressure is reached (at the inlet to the gas train).

Only specially qualified technical staff may perform welding work on gas piping (regional regulations must be observed).

Gas piping must be subjected to a leak test (with test report) must be carried out on gas piping.

The interface between the module (engine gas intake) and the gas line (gas train) must be a flexible connection. The distance between the zero pressure controller and the engine connection must not exceed a maximum of 2m and, where TecJet is used, a maximum of 1.3 m (length including hose in each case).

In other words, from a control point of view, the zero pressure controller and/or the TecJet must be positioned with the flexible connection as close as possible to the engine gas intake on the gas mixer. The gas train must be viewed as a single unit; lines between the solenoid valve and the zero pressure controller are not permitted. This also applies to the pre-combustion chamber gas pressure controller (for type 6 engines only).

4 Lubricating oil

Describes the requirements for engine lubricating oil

GE Proprietary Information: CONFIDENTIAL! Use or disclosure of data contained on this sheet is subject to the restrictions on the cover or on the first page.

Construction of lubricating oil piping

Dimensioning of tanks for additional fresh oil and used oil

4.1 Lubricating-oil requirements

TI 1000-0099

A/B/C/D/K

4.2 Oil piping

TI 1400-0131

Oil piping to be manufactured from seamless steel (not copper) pipes.

Connect pipe ends with screwed pipe joints. Do not weld, as dirt may enter the engine and cause damage.

Subject pipe system to leak test (test certificate required).

4.3 Oil system

Fresh-oil tank to be dimensioned to accommodate the scheduled oil-change intervals (e.g. four changes a year).

Used-oil tank to be dimensioned to accommodate the total volume (of oil pan and fresh-oil tank).

Bottom edge of fresh-oil tank to be positioned a minimum of 1 metre and a maximum of 10 metres above the oil connection on the module in order to ensure gravity filling.

Separate pumps to be provided for fresh oil and waste oil.

5 Exhaust gas

TI 1100-0110

Dimensioning and construction of the exhaust gas system

The locating bearing for the exhaust gas piping must be designed so that the exhaust gas turbocharger is not subjected to any mechanical stress (provide a compensator at the interface between the turbocharger outlet and the exhaust gas pipe inlet).

The exhaust gas piping must be designed for brief pressure shocks of up to 6 bar (operating pressure: 0.05 bar).

Exhaust gas piping must be dimensioned so that its resistance (= total of pipe resistance of all components starting from the turbocharger outlet) does not exceed the maximum permissible exhaust gas backpressure starting from the turbocharger outlet.

Provide a condensate drain at the lowest point of the exhaust gas piping, exhaust gas heat exchanger and noise insulation; drains must be individually piped into the water tank.

In the case of multi-engine systems, exhaust gas systems must not be combined.

Exception:

GE Proprietary Information: CONFIDENTIAL! Use or disclosure of data contained on this sheet is subject to the restrictions on the cover or on the first page.

- double shut-off valves with intermediate ventilation for each module
- if a continuous underpressure exists at the point where the systems are combined (e.g. a continuous flow in the smoke stack).

Important: Allow space for insulation of exhaust gas piping!

Make sure to leave enough space in front of and behind the boiler to clean the exhaust gas heat exchangers of type 6 engines.

6 Engine-cooling, warm and hot water

Describes the requirements for hot and warm water in closed heating systems.

Requirements for engine cooling water (protection against freezing and corrosion).

Construction of piping (commissioning strainer).

6.1 Hot water and warm water in heating systems

TI 1000-0206

6.2 Requirements as to engine cooling water

TI 1000-0200

TI 1000-0201

TI 1000-0204

6.2.1 Quality of cooling water in open circuits

TI 1000-0208

6.3 Piping

TI 1400-0131

A water speed of 2 m/sec should be assumed when dimensioning pipes.

Flexible connections must be provided at the interfaces between the module and the customer's water systems.

The warm-water system must be kept clean by means of suitable filters

Important: Allow space for the insulation of water pipes!

Monitoring systems must be provided in accordance with specific national regulations (e.g. maximum pressure, maximum temperature, maximum flow).

The piping system must be cleaned before initial commissioning.

A leak test must be carried out (test certificate required).

It is recommended that a suitable, experienced firm be contracted to install the water system.

GE Proprietary Information: CONFIDENTIAL! Use or disclosure of data contained on this sheet is subject to the restrictions on the cover or on the first page.

7 Ventilation

TI 1100-0110

Describes the requirements for the technical equipment for the ventilation of the engine room, generator and engine.

8 Electrics

TI 1100-0110

General protective measures for installing high-voltage circuits

Requirements for the customer's control power supply

Cabling; cable dimensions; installation.

Handling electronic components.

8.1 Protective measures for installing high-voltage circuits

TI 1000-0515

8.2 Customer's control power supply

Voltage: 24 VDC (at GE Jenbacher terminals: min. 22 V ⇔ max. 30 V, including ripple)

Ripple: max. USS 2.4 V.

8.3 Starting system (Batteries)

TI 1000-0050

8.4 EMC cabling and cable dimensions

TI 1000-0505

8.5 Handling electronic components

TI 1000-0510

8.6 Energy output cable at the generator

Generator power cable:

The diameter of the power cables must be determined or checked in accordance with VDE 298, Parts 1 - 4 (cabling method, bundled cables, etc.) or IEC 364-5-523 by the company carrying out the work. Rated generator current: IN = ... A, where cos phi = 0.8.

The connection guidelines laid down by the generator supplier must be observed.

When connecting the cable, make sure that no force is exerted on the generator terminals.

This also applies during assembly.

GE Proprietary Information: CONFIDENTIAL! Use or disclosure of data contained on this sheet is subject to the restrictions on the cover or on the first page.

Sufficient free cable length must be provided between the generator and foundation / junction box to compensate for the relative movement between the generator and foundation / junction box.

Generator cables must be disconnected from the generator before their insulation resistance is tested.

8.6.1 Low-voltage generators

The output cable must be laid horizontally on the specified side.

Under no circumstances should the output cable be run vertically upward through the terminal-box cover.

Output using cable:

Use flexible finely stranded copper conductors (not aluminium conductors).

The individual conductors must at least comply with Class 2 (Class 5 recommended) of IEC 60228/ CENELEC HD 383/ VDE 0295.

Cable sockets: max. 45 mm wide (because of distance between connection bar holes).

Cable glands: nickel-plated brass (no threaded plastic connections).

Output using bus bars:

To ensure that vibrations are not transmitted on and to compensate for any movements of the module, short high-flexibility cable connections must be installed between the generator connection bars and the output bars.

Note: compensators such as the wire mesh type have in practice been unable to withstand the vibrational loadings in the long term.

GE Proprietary Information: CONFIDENTIAL! Use or disclosure of data contained on this sheet is subject to the restrictions on the cover or on the first page.

8.6.2 Medium-voltage generators

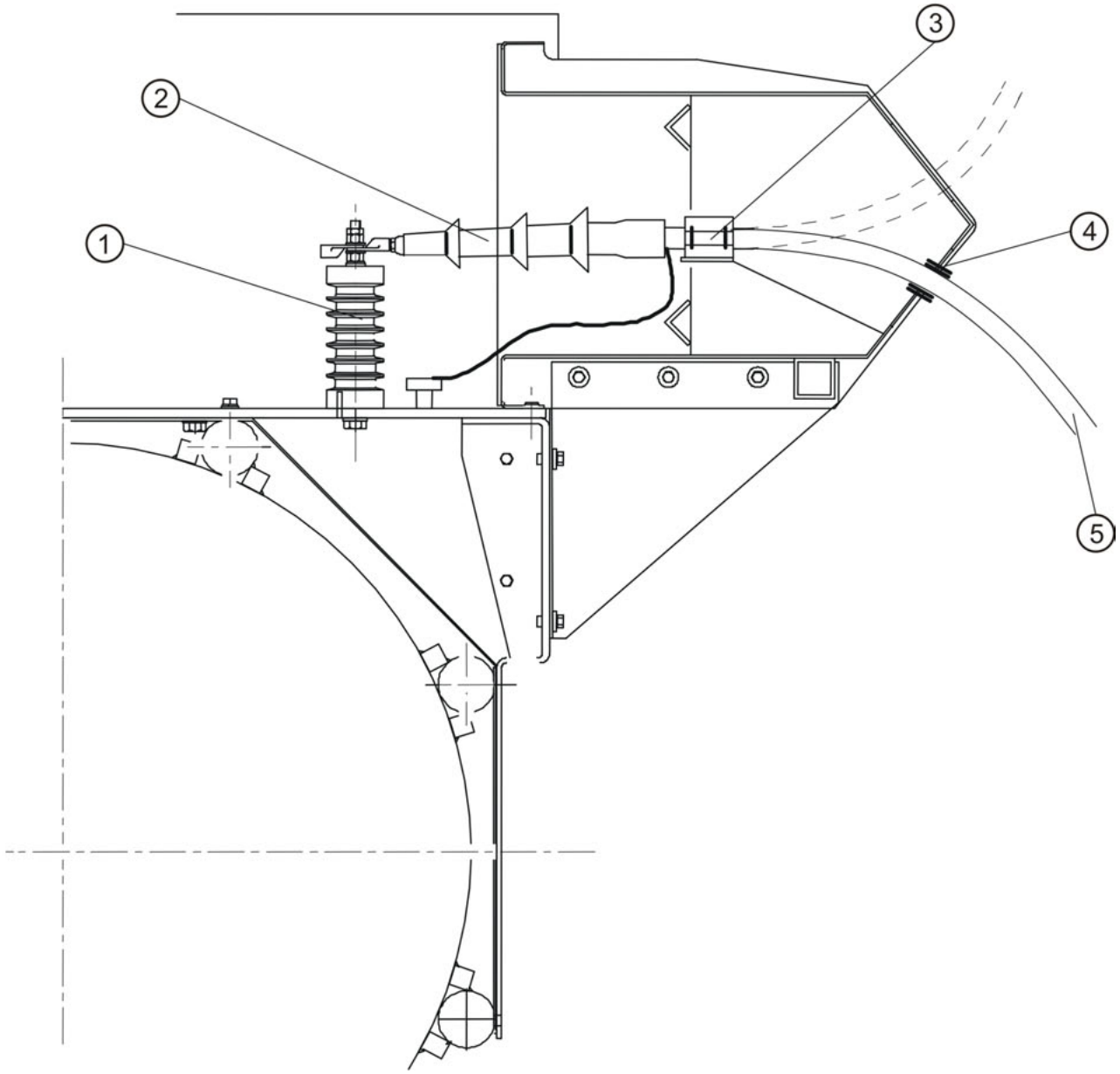

Principle sketch: Energy output with cable sealing ends and strain-relief brackets

①	Isolators	④	threaded joint
②	Sealing ends	⑤	Middle tension cable with free cable length
③	Depending on the generator type, strain-relief brackets can also be mounted outside the connection box.		

GE Proprietary Information: CONFIDENTIAL! Use or disclosure of data contained on this sheet is subject to the restrictions on the cover or on the first page.

In the case of elastically-mounted modules (see drawing) sufficient "free cable length" must be provided to compensate for the movement of the module when starting, stopping and shutting off full load. In order to ensure that no load is placed on the terminal clamps as a result of this movement, a cable fastening must be attached to the strain-relief brackets provided for the purpose. This cable fastening must be rigid and should be linked to the moving module to prevent the cable fastening from moving in relation to the terminal clamps (isolator).

Medium-voltage cable:

Flexible, finely stranded single-conductor copper cabling must be used!

Conductor stranding: Class 5 in accordance with IEC 60228/ CENELEC HD 383/ VDE 0295.

Recommended cable for medium-voltage generators:

e.g.:

- FELTOFLEX Type. NTMCWOEU (single-core cable),
  Draka Industrial Cable GmbH http://www.draka.dk/cableteq/pdf/7_11.pdf
- PROTOLON, type NTMCGCWÖU (single-core cable),
  http://www.prysmian.com/en_42/cables_systems/technergy/cutsheet/mining/05PROTOLON1core.pdf

Cable sealing ends for generator connection >4.2 kV:

The available space between the terminal clamps (isolator) and the strain relief brackets is approx. 320 mm. Consequently, only "short" sealing ends are involved.

Recommended sealing ends:

e.g.: - 3M QUICK TERM III (24kV)
Set 93-EP630-1 for 95 – 240 mm² Cu at 6 - 13.8 kV
(For more information: www.3M-elektro.de)
- Raychem (17.5 kV)
Set TFTI 4131 for 95 – 240 mm² Cu at 6 – 13.8 kV
(For more information: http://energy.tycoelectronics.com/countryselector.asp)

Generator connection without cable sealing ends for voltages <= 4.2 kV

Screened medium-voltage cables are not necessary for voltages < 4.2 kV Appropriate shrink tubing can be used instead of sealing ends.

Connectable power cables:

The generator connection cabinet with a rated apparent power of up to 6 MVA is designed for one cable/phase and one cable/neutral point.

Cable sockets:

These should be dimensioned in such a way that they are suitable for the power levels (vibration levels) occurring in the generator.

Recommended (short) press cable sockets:

Nexans Company: Type KU-F-V (more information at www.nexans.com or www.gph.net)

GE Proprietary Information: CONFIDENTIAL! Use or disclosure of data contained on this sheet is subject to the restrictions on the cover or on the first page.

Cable glands: Nickel-plated brass (no threaded plastic connections) or the built-in rubber grommets.

Cable connection as per DIN 46200

Elastic components such as spring washers, dished washers, or aneroid diaphragms may be installed, but only on one side of the clamped conductor. Washers may also need to be used. The other side is reserved for conducting power, so only washers or tab washers made of a copper/zinc alloy (brass) can be used. Materials which are at least equivalent in terms of electrical and mechanical properties are to be used.

When connecting lugs, the lugs must be protected with washers on both sides to prevent bending.

Tightening torques:

Insulated supports for indoor systems

Tightening torque M12 50 - 70 Nm

Tightening torque M16 90 - 110 Nm

Hexagonal head screw: steel 8.8

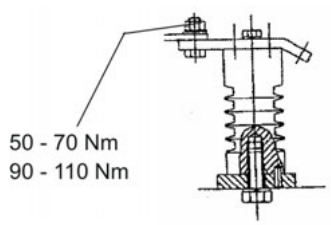

Capacitor-type terminal to DIN 46265

Tightening torque M12 20 Nm

Tightening torque M16 40 Nm

Terminal stud: Ms

Terminal nut: Ms

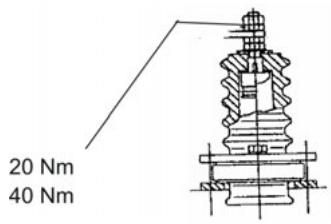

See also

- Key to Symbols [⇨ 1.2, Page 1]

8.7 Generator protection against high transient surge voltages

High transient surge voltages, such as those occurring during switching operations or lighting stakes on power lines, can damage the generator windings and measuring instruments. The generator must therefore be fitted with surge protection equipment.

Design: The pulses at the generator terminals must be reduced to a value below the following peak value:

Peak value in kV = 1,25 × √2 × (2Vline+1).

i.e. for a 10 kV generator: 1,25 × 1,414 × (2×10 + 1) ≅37,1 kV

The maximum rise time of the above calculated value must be 5 microseconds.

A combination of different capacitors/resistors and voltage-dependent resistors must be used for this,

GE Proprietary Information: CONFIDENTIAL! Use or disclosure of data contained on this sheet is subject to the restrictions on the cover or on the first page.

e.g.: "ZORC" high-frequency surge suppressors by STRIKE Technologies Ltd., http://www.strike.co.za/Products_zorc.html http://www.strike.co.za/Products_zorc.html

Installation: Surge suppressors offer the best protection against inrush currents +and lightning strikes when they are installed as close as possible to the generator output terminals.

The surge suppressor can be fitted inside the generator switchgear if the cable length between the generator and switchgear is not more than 25 m. If this is the case, a separate earthling cable must be run between the surge suppressor and the generator housing (resistance less than 0.5 ohms).

If the cable between the generator and switchgear is longer than 25 m, the surge suppressor must be installed next to the generator.

Enclosure acc. to IEC 62271-200 and IEC 60204-11, metal enclosed and capable of withstanding an internal arc fault (Internal Arc Classification IAC AFLR acc. to IEC 62271-200), minimum degree of protection of IPXXDH, and clearly marked to distinguish it from LV equipment.

9 Employee protection

TI 2300-0001

Employer's duties with regard to the safety and health of employees.

10 Technical Instructions, standards and guidelines

TI 1100-0110

Installation of GE Jenbacher modules.

TI 1000-0041

TI 1000-0042

TI 1000-0043

TI 1000-0044

TI 1000-0046

TI 1000-0050

TI 1000-0099A

TI 1000-0099B

TI 1000-0099C

TI 1000-0099D

TI 1000-0099K

TI 1000-0200

TI 1000-0201

TI 1000-0204

GE Proprietary Information: CONFIDENTIAL! Use or disclosure of data contained on this sheet is subject to the restrictions on the cover or on the first page.

TI 1000-0206

TI 1000-0208

TI 1000-0300

TI 1000-0301

TI 1000-0302

TI 1000-0330

TI 1000-0505

TI 1000-0510

TI 1000-1105

TI 1100-0110

TI 1100-0111

TI 1100-0112

TI 1400-0091

TI 1400-0131

TI 2300-0001

GE Jenbacher-ZNR E 9684 Bl1 & Bl2

The guidelines shown in *italics* are referred to in **TI 1100-0110**.

11 Installation documentation

Technical project documentation, e.g.

- Technical diagram
- Arrangement plan / terminal diagram
- View of unit
- Circuit diagram
- Cable list
- Interface list
- Technical specification of the control system
- Description – Operation
- Maintenance
- Spare parts catalogue

These technical documents are binding in every case!

GE Proprietary Information: CONFIDENTIAL! Use or disclosure of data contained on this sheet is subject to the restrictions on the cover or on the first page.

1 Freedom from condensate of fuel gases for GE Jenbacher gas engines 1
1.1 Principles 1
2 The most common types of condensate formation 1
2.1 Tips 1
3 How to avoid malfunctions resulting from condensate in the fuel gas 1

1 Freedom from condensate of fuel gases for GE Jenbacher gas engines

1.1 Principles

1.1.1 Malfunctions that occur because the fuel gases supplied are insufficiently free from condensate are not covered by our warranty. The only exception is where the contractual scope of supply expressly includes a specific fuel gas drier.

1.1.2 Vaporised accompanying substances (which only occur as liquids under certain conditions) in the gas do not generally cause engine damage (this does not of course apply in the case of gas components such as halogen compounds, sulphur compounds, etc., which are known to be harmful).

2 The most common types of condensate formation

Gas	Condensate structure	Most common consequences for engines
Sewage gas, biogas and landfill gas	Acidic water, sometimes as an emulsion with the cylinder oil in the gas compressor	Corrosion (- - > wear)
		TAN concentration or ipH reduction in lubricating oil
		Carbon deposits on: valves, piston ring grooves and slots
Associated gas	Higher hydrocarbon compounds in liquid form	Film of lubricating oil washed off (seizing)
		Knocking combustion
		Edges burnt off
	Higher hydrocarbon compounds and/or naphtha in liquid form	Carbon deposits on: valves, piston ring grooves and slots
Propane/butane gas (evaporated LPG)	Liquid propane/butane	Film of lubricating oil washed off (seizing)
		Knocking combustion
		Edges burnt off
Carbonisation gas (e.g. wood gas)	As described above	As described above

2.1 Tips

2.1.1 In our experience, malfunctions caused by insufficiently dried gas will in most cases first occur outside the actual engine, i.e. in fittings, equipment and pipelines. These malfunctions should be taken seriously as a first sign of trouble, as otherwise serious engine breakdowns are likely to follow sooner or later

3 How to avoid malfunctions resulting from condensate in the fuel gas

3.1 Prevent vapour by allowing gas to cool and/or expand.

3.2 Mechanical separation (e.g. cyclone or separation filter) and by discharging the condensate.

GE Proprietary Information: CONFIDENTIAL! Use or disclosure of data contained on this sheet is subject to the restrictions on the cover or on the first page.

3.3 The fuel gas line leading to the engine must be designed not to allow the gas to continue to cool down, which means that for all practical purposes it is not expanded by resistance or downstream pressure reducers. (If necessary, insulate the fuel gas line or provide it with a trace heating system).

3.4 Because, in spite of the freedom from condensate found on the test taps, a certain quantity of condensate will still find its way into the engine, it is very important to ensure that the condensate is as free from acid-forming components as possible. To verify this, the pH-value of the aqueous extract taken from the condensate separators must be checked.

The higher the acid concentration, the greater the harmful effect even where barely perceptible quantities of condensate are still getting into the engine with the gas.

GE Proprietary Information: CONFIDENTIAL! Use or disclosure of data contained on this sheet is subject to the restrictions on the cover or on the first page.

1 Tips 1
2 Procedure 1
3 Engine running-in programme 1
3.1 Running-in programme for type 2, 3 and 4 gas engines: 2
3.2 Running-in programme for type 6 gas engines: 2
3.3 Running-in programme for type 9 gas engines: 3

1 Tips

This Technical Instruction describes the running-in procedure for Type 2, 3, 4, 6 and 9 gas engines with a generator coupled (also applies to 60 Hz rated frequency).

The running-in procedure must be carried out at the appropriate rated engine speed (apart from Type 9 engines).

The purpose of carrying out the running-in procedure according to the instructions is:

- to be able to observe the engine's operating behaviour closely after repair or maintenance to ensure that the work has been carried out correctly, and to minimise any risk to subsequent normal operation;
- to achieve the required running-in wear of new engine components (cylinder linings, pistons, piston rings, plain bearings etc.).
- All new modules leaving the GE Jenbacher production plant are subjected to a mandatory running-in procedure on the factory test stand and a functional test.
- All repaired modules leaving the production plant are subjected to a mandatory running-in procedure on the factory test stand and a functional test.
- New engines which are coupled to the module at the installation site must be run in and tested on site.
- Modules which are repaired on site must be run in and tested on site.

2 Procedure

Before carrying out the engine running-in programme, follow the **Inspection work - Daily inspection** procedure.

Having finished the engine running-in programme according to procedure (as described in section 3), carry out **Maintenance following initial commissioning.**

3 Engine running-in programme

Make sure that, if required, engine operation can be stopped immediately by pressing the EMERGENCY STOP button!

You must therefore ensure that the EMERGENCY STOP button is freely accessible at all times!

Look out for any unusual sounds, vibrations and temperature phenomena during the running-in procedure.

Type 2,3,4 and 6 engines:

The purpose of the running-in stages (5 minutes each) is to check the mixture setting using the exhaust gas emission measurement. NOx emissions must not exceed 1,000 mg NOx/m^3N (or 5% O2 in the exhaust gas).

GE Proprietary Information: CONFIDENTIAL! Use or disclosure of data contained on this sheet is subject to the restrictions on the cover or on the first page.

Type 9 engine:

The first running-in stage, with the engine delivering power, is to check the mixture setting using the exhaust gas emission measurement. NOx emissions must not exceed 1,000 mg NOx/m³N (or 5% O2 in the exhaust gas).

3.1 Running-in programme for type 2, 3 and 4 gas engines:

Carry out the running-in stages subsequently. When reaching rated load, this load setting should be continued for 30 minutes' running, at the end of which running-in is finished. Do not overload!

Running-in stage	Stage running time	ELECTRICAL POWER						
		J 208	J 212	J 216/ J 312	J 316/ J 412	J 320/ J 416	J 420	J 424
	Min.	kW	kW	kW	kW	kW	kW	kW
1	10	0	0	0	0	0	0	0
2	5	35	50	65	90	120	150	180
3	5	85	130	160	220	290	360	430
4	10	130	205	250	350	470	580	700
5	10	200	305	380	520	700	870	1050
6	10	265	410	510	700	930	1160	1400
7	30	Rated power	Rated power	Rated power	Rated power	Rated power	Rated power	Rated power

3.2 Running-in programme for type 6 gas engines:

Complete the running-in stages in sequence until rated power is reached. Then run the engine for 30 minutes at rated power and finish the running-in procedure. Do not overload!

Running-in stage	Stage running time	ELECTRICAL POWER						
		J 612	J 616	J 620	J 624			
	Min.	kW	kW	kW	kW			
1	10	0	0	0	0			
2	5	200	240	300	400			
3	10	500	400	760	1000			
4	10	750	900	1140	1500			
5	10	1000	1200	1520	2000			
6	10	1250	1520	1900	2500			
7	10	1500	1800	2400	2900			
8	10	1750	2100	2900	3500			
9	30	Rated power	Rated power	Rated power	Rated power			

GE Proprietary Information: CONFIDENTIAL! Use or disclosure of data contained on this sheet is subject to the restrictions on the cover or on the first page.

3.3 Running-in programme for type 9 gas engines:

Complete the running-in stages in sequence until rated power is reached. Then run the engine for 30 minutes at rated power and finish the running-in procedure. Do not overload!

Running-in programme for new engines, or after replacing the main or conrod bearings

Running-in stage	Stage running time	Electrical power	Speed
	[h]	kW	[rpm]
1	00:15	0	500
2	00:45	0	800
3	00:15	0	1000
4	00:30	1200	1000
5	00:30	1900	1000
6	00:15	2850	1000
7	00:15	3800	1000
8	05:00	4750	1000
9	00:15	5700	1000
10	00:15	6650	1000
11	00:30	7600	1000
12	00:30	8550	1000
13	00:30	9500	1000

Running-in programme after repairs or maintenance (apart from replacing the main or conrod bearings)

Running-in stage	Stage running time	Electrical power	Speed
	[h]	kW	[rpm]
1	00:05	0	500
2	00:05	0	1000
3	00:10	2000	1000
4	00:10	3000	1000
5	00:10	4000	1000
6	00:10	5000	1000
7	00:10	6000	1000
8	00:15	7000	1000
9	00:15	8000	1000
10	00:30	9000	1000
11	00:30	9500	1000

GE Proprietary Information: CONFIDENTIAL! Use or disclosure of data contained on this sheet is subject to the restrictions on the cover or on the first page.

1 Purpose 1
2 General 1
3 Pickling pipes 1
4 Preservation of pickled pipes 2

1 Purpose

This Technical Instruction describes the pickling and preservation of steel pipes.

2 General

Pipes on which welding operations are carried out or which are subject to scaling due to other effects of heat must be cleaned by pickling.

Secure all piping against vibration. Pipes must be connected to the engine using flexible connecting pieces.

A test certificate as specified in DIN 8560, Test Group RII, is required before welding work can be carried out on gas pipes.

Pressure and impermeability checks must be carried out in accordance with specific national or local regulations.

Seal gas-carrying threaded pipe connections with DIN-DVGW registered screw thread sealing tape or DIN-DVGW registered "Wevoplast F" (DIN-DVGW Reg. No. 74.01 e 130) together with hemp (flax).

3 Pickling pipes

Use a mixture of sodium bisulphate and water or hydrochloric acid and water as the pickling agent.

Mixing ratio of water to acid:

Hydrochloric acid	1:1	
Sodium bisulphate	1:20	**Use the mixing ratios specified by the manufacturer of the pickling agent!**

Close the pipe at one end and fill with pickling agent or, if possible, lay it in a pickling bath.

Follow the manufacturer's instructions with regard to temperature!

Pickling agent exposure time:

Hydrochloric acid/water	approx. 1 hour
Sodium bisulphate/water	approx. 10 hours

At the end of the exposure time, empty the pipe or remove it from the pickling bath and rinse thoroughly with a cold cleansing agent.

Ensure that the pipe is has been properly cleaned.

Dispose of pickling agent correctly!

GE Proprietary Information: CONFIDENTIAL! Use or disclosure of data contained on this sheet is subject to the restrictions on the cover or on the first page.

4 Preservation of pickled pipes

Preserve pipes with a suitable agent after pickling.

e.g. oil line - engine oil, cooling water lines - coolant.

GE Proprietary Information: CONFIDENTIAL! Use or disclosure of data contained on this sheet is subject to the restrictions on the cover or on the first page.

1 Description ... 2
1.1 General ... 2
1.2 Construction of MORIS ... 3
2 Technical data ... 5
2.1 Protection class ... 5
2.2 Ambient conditions ... 5
2.3 Chemical resistance ... 6
2.4 Mechanical data ... 6
2.4.1 Vibration resistance 6
2.4.2 Rail dimensions 6
2.4.3 Tightening torques 6
2.5 Electrical data ... 7
2.5.1 24 V power supply 7
2.5.2 185V power supply 7
2.5.3 Pickup signal amplifier SPA24 7
2.5.4 SAFI 8
3 Safety information ... 8
3.1 General ... 8
3.2 Ignition module ... 9
4 Installation ... 10
4.1 Mounting the ignition system on the engine ... 10
4.2 Earthing the ignition system ... 10
4.3 Mounting and adjusting the pickups on the engine ... 11
4.4 Replacing components ... 11
4.4.1 spark plug connector 11
4.4.2 Thermocouple 11
4.4.3 M coil 11
4.4.4 SAFI 12
4.4.5 Ignition modules 13
4.4.6 Connection and end modules 14
4.4.7 Link modules 15
4.4.8 Setting the cylinder coding 15
5 Operation ... 16
5.1 Ignition control system ... 17
5.1.1 Phase 1 – Producing the ignition spark 18
5.1.2 Phase 2 – Regulating the current in the ignition spark 18
5.1.3 Phase 3 – De-energising and synchronising for possible re-ignition after spark interruption 20
5.1.4 Pickup signals 20
5.1.5 Visual displays on the SAFI 20
5.1.6 Identifying the cylinder arrangement in the engine 21
5.1.7 Adjusting the reset position 21
5.1.8 High-voltage measurement 22
5.2 Control and visualisation ... 22
5.2.1 Parameter setting 22
5.2.2 Displays 23
5.2.3 Monitoring functions 24
5.2.4 Possibility of diagnosis by self-test 25

GE Proprietary Information: CONFIDENTIAL! Use or disclosure of data contained on this sheet is subject to the restrictions on the cover or on the first page.

5.2.5 Safety plan 26
6 Diagnosis and troubleshooting 28
6.1 ignition 29
6.1.1 Operating notification (Bxxxx) 29
6.1.2 Warnings (Wxxxx) 29
6.1.3 Error messages (Axxxx) 31
6.2 High-voltage measurement 32
6.2.1 Operating notification (Bxxxx) 32
6.2.2 Warnings (Wxxxx) 32
7 Cylinder coding 33
8 Terminal designation 35
8.1 Ignition module 35
8.2 Connection module 36
8.3 End module 36

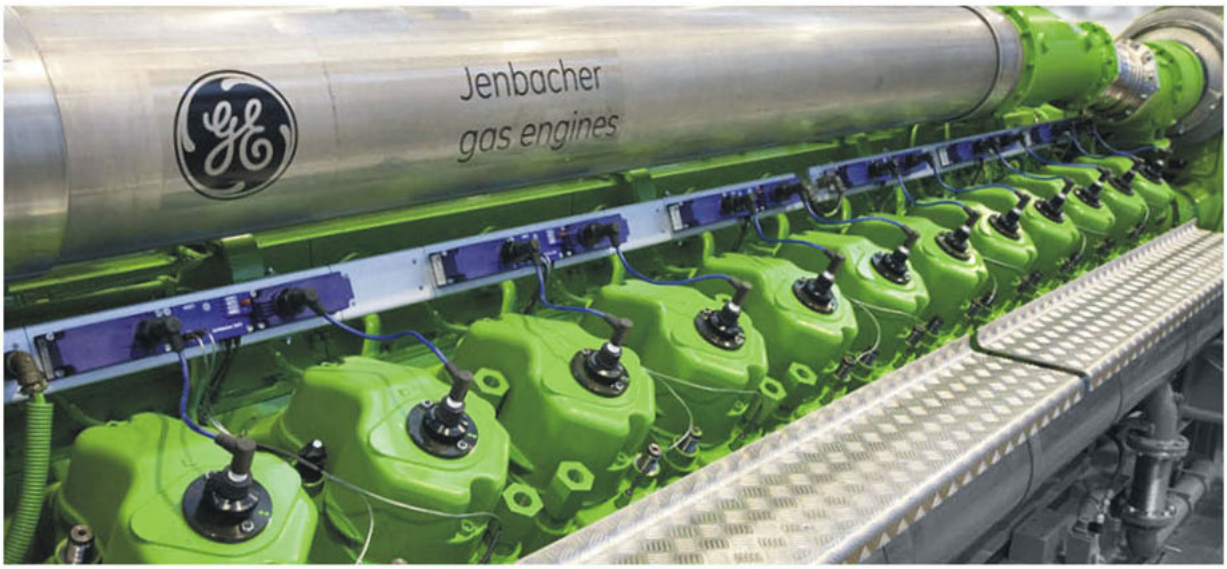

1 Description

1.1 General

The name **MORIS** is derived from the English term "**Mo**dular **R**ail **I**gnition **S**ystem" and describes the design configuration of the ignition system

This modular concept means that any desired cylinder or engine configuration can be assembled from individual modules.

The output stage of the ignition system, the ignition module, has been integrated into the cabling rail. An ignition module contains the power electronics for two cylinders.

The **SAFI** (**S**ensor **A**ctor **F**unctional **I**nterface) is a further development of the **KLS98** with a substantially increased range of functions.

GE Proprietary Information: CONFIDENTIAL! Use or disclosure of data contained on this sheet is subject to the restrictions on the cover or on the first page.

The **SAFI** is a DSP-based device into which both comprehensive monitoring functions (knocking, exhaust gas temperatures, etc.) and the ignition control and monitoring system have been integrated.

The **SAFI** calculates the speed and crankshaft angle position for the ignition pulses from pickup signals from the camshaft and the crankshaft which are processed by the **SPA 24** (**S**AFI **P**ick-up **A**mplifier).

The **SAFI** and the engine controller communicate via the CAN bus.

Power is supplied to the **MORIS** by the 24 V grid and the **MPM** (**M**ORIS **P**ower **M**odule).

The following Technical Instructions are referred to in this document:

- TI 1502-0069 - **MPM** (**M**ORIS **P**ower **M**odule)
- TI 1502-0071 - **SAFI** (**S**ensor **A**ctor **F**unctional **I**nterface)
- TO 1502-0072 - **SPA24** (**S**AFI **P**ick-up **A**mplifier)

You will need these Technical Instructions to obtain a complete understanding of the **MORIS** functions.

1.2 Construction of MORIS

An aluminium rail is used for each row of cylinders. The rail connected to cylinder 1 is designated as Bank A and the rail for the second row of cylinders as Bank B.

MORIS with holder, **M coils** and **SAFI** for J612 engine

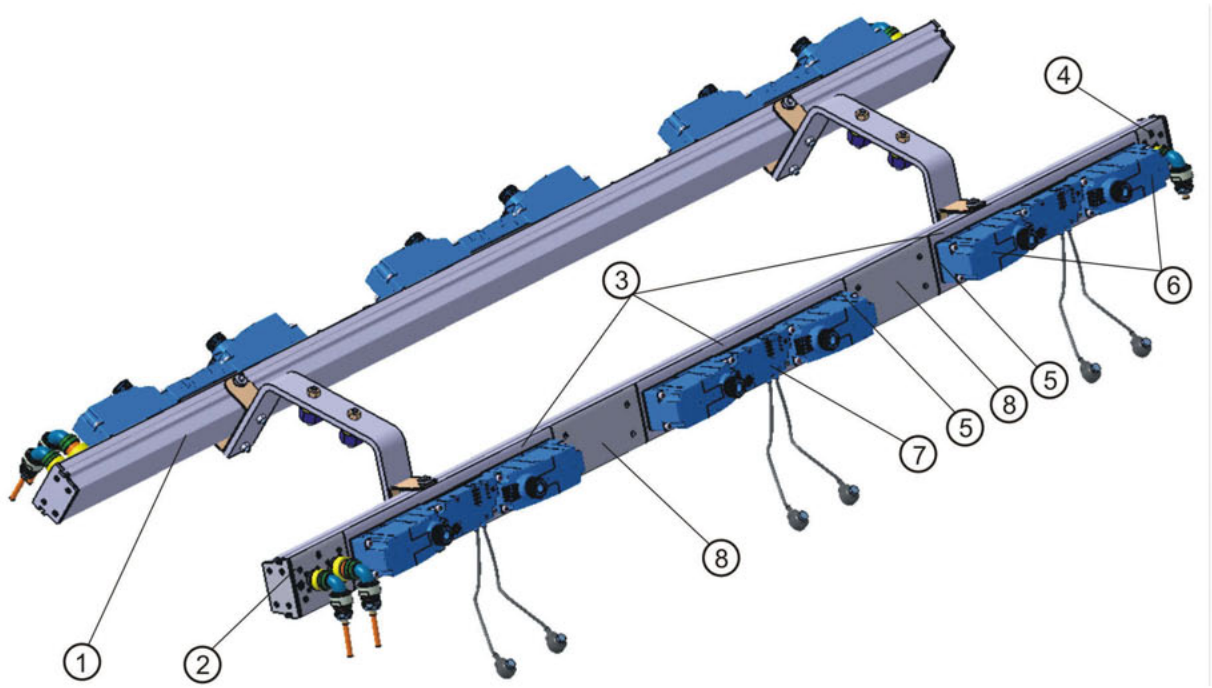

GE Proprietary Information: CONFIDENTIAL! Use or disclosure of data contained on this sheet is subject to the restrictions on the cover or on the first page.

MORIS consists of the following components	
①	Aluminium rails, TL 487209 to TL 487211 and TL 487804 to TL 487805
②	Connection modules Part No. 487195 (Bank A) and Part No. 487346 (Bank B) for power supplies, signal and CAN bus connections.
③	Ignition module part no. 487207
④	End module Part No. 487198 (Bank A) and Part No. 487347 (Bank B)
⑤	Gasket Part No. 487213 between the individual modules
⑥	**M coils** Part No. 487181 and Part No. 487883 (**CSA** version)
⑦	**SAFI** part nos. 411880, 433525, 435624
⑧	Link modules part nos. 487208 for type 4 engine and 487803 for type 6 engine

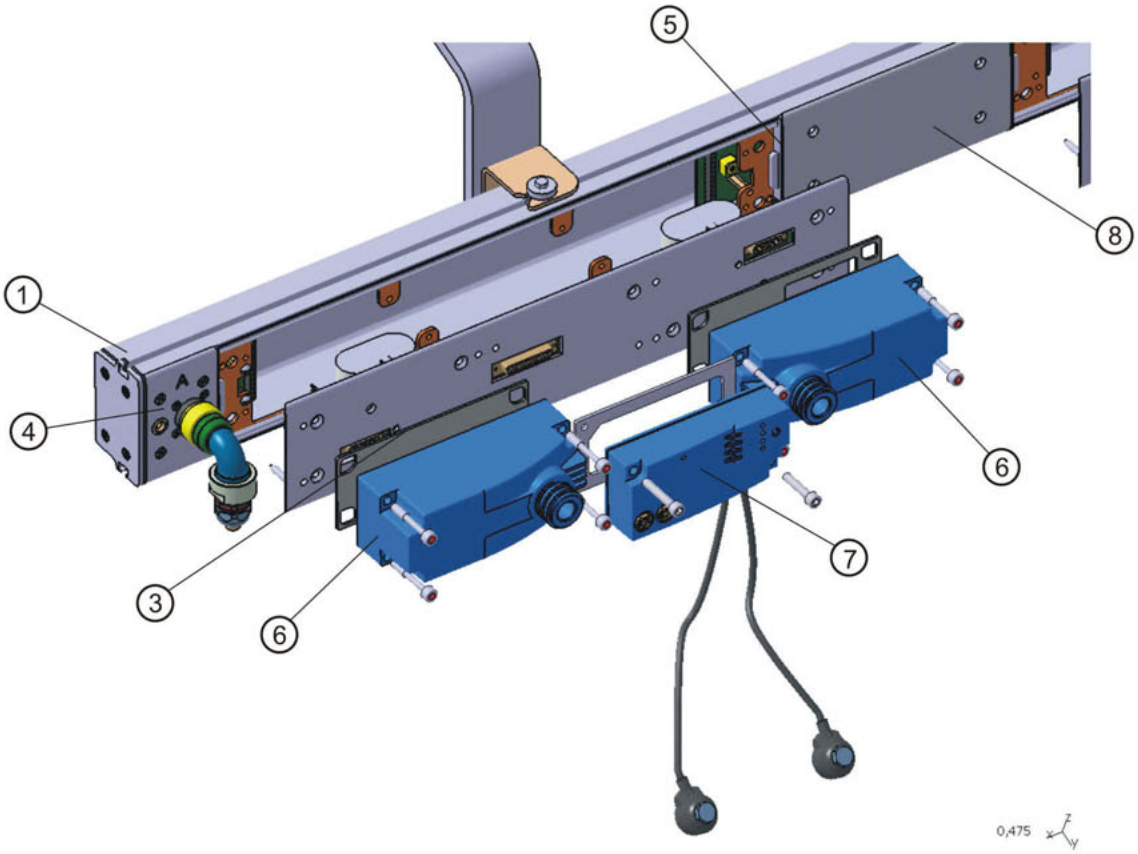

GE Proprietary Information: CONFIDENTIAL! Use or disclosure of data contained on this sheet is subject to the restrictions on the cover or on the first page.

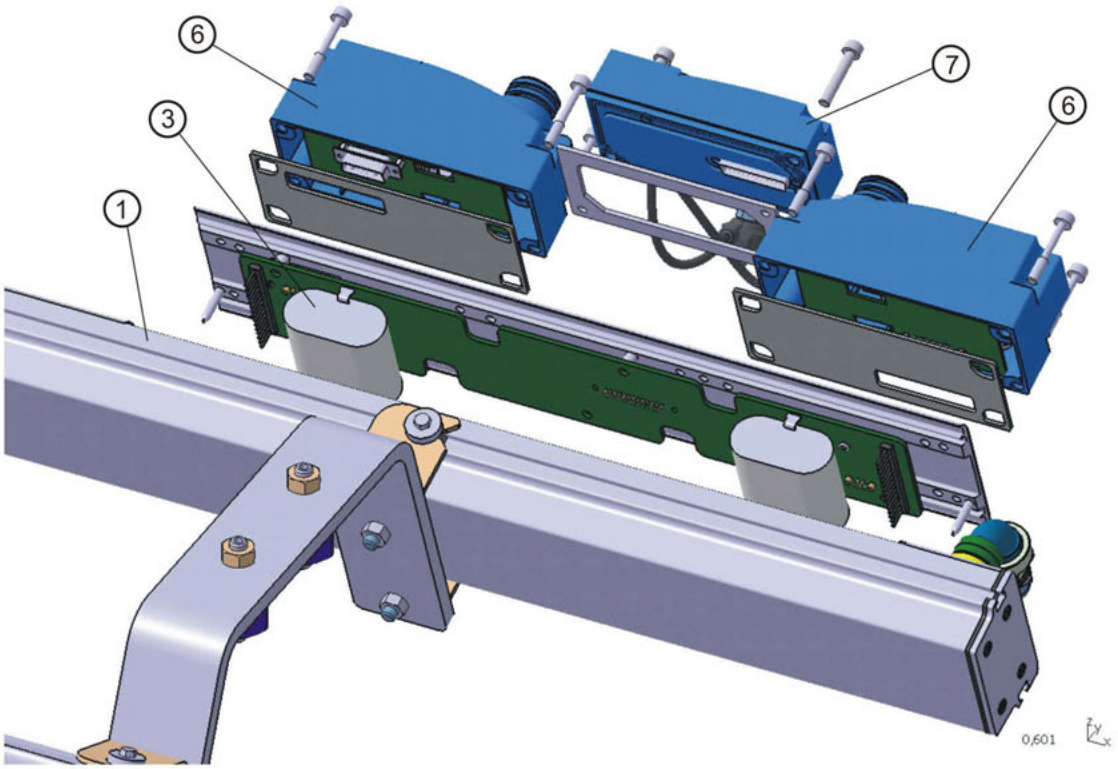

2 Technical data

2.1 Protection class

In assembled condition, the **MORIS** ignition system with all of its components fitted conforms to Protection Class IP54.

Ambient conditions

2.2 Ambient conditions

Temperature limits	Storage	-25 ... + 70 °C
	In operation	-25 ... + 85 °C
Relative humidity	Storage	90 %, no dew
	In operation	85 %, no dew
Air pressure	up to 2,000 m above sea level	

GE Proprietary Information: CONFIDENTIAL! Use or disclosure of data contained on this sheet is subject to the restrictions on the cover or on the first page.

2.3 Chemical resistance

MORIS has been developed to meet **GE Jenbacher's** specific requirements for chemical resistance to the antifreeze (glycol) in the engine cooling water, sulphurous acid, engine oil and UV radiation.

In general, the following limit levels for atmospheric pollution apply:

Sulphur dioxide (SO2)	0.030 ppm
Hydrogen sulphide (H2S)	0.010 ppm
Nitrous oxide gases (NOx)	0.030 ppm
Chlorine (C12)	0.010 ppm
Hydrogen fluoride (HF)	0.010 ppm
Ammonia (NH2)	0.500 ppm
Ozone (O3)	0.005 ppm

2.4 Mechanical data

2.4.1 Vibration resistance

MORIS is designed for vibration loads to an effective value of max. 20 mm/s at 10 - 300 Hz.

2.4.2 Rail dimensions

The length of the rail depends on the engine type in use. Two J612 rails per cylinder row are used for the J624.

part number	Engine type	Length
487 209	Rail J412	1,557 mm
487 210	Rail J416	2,017 mm
487 211	Rail J420	2,477 mm
487 804	Rail J612	1,933 mm
487 805	Rail J616	2,581 mm
487 806	Rail J620	3,229 mm

2.4.3 Tightening torques

Screw/bolt type	Dimension	Location	Tightening torque
Socket-head cap screw	M6 x 35 mm	**SAFI** top left	3.4 Nm | 13.61 kg in
Socket-head cap screw	M6 x 30 mm	**SAFI** bottom right	3.4 Nm | 13.61 kg in
Socket-head cap screw Special screw	M6 x 40 mm	**M coil**	3.4 Nm | 13.61 kg in
Countersunk screw	M5 x 12 mm	Ignition module	2.3 Nm | 9.07 kg in
Countersunk screw	M4 x 9 mm with 8-32 X 3/8 SEAL FT HD joint ring	Connecting module, type 6 engine coupling and end modules	1.7 Nm | 6.80 kg in

GE Proprietary Information: CONFIDENTIAL! Use or disclosure of data contained on this sheet is subject to the restrictions on the cover or on the first page.

Screw/bolt type	Dimension	Location	Tightening torque
Hexagonal head screw	M6 x 12 mm	Earthing screw on connection and end modules	3.4 Nm | 13.61 kg in
Hexagonal head screw	M5 x 12 mm	Mounting	2.3 Nm | 9.07 kg in
Special hexagonal head	M10 x 15 mm	Thermocouple	15 Nm | 60.33 kg in
Hexagonal head screw	M8 x 25 mm	Knock sensor	20 Nm | 177 lb in

2.5 Electrical data

The terminal designations of all **MORIS** components are listed in Section 8, Terminal designations.

2.5.1 24 V power supply

MORIS is powered by a battery with a nominal voltage of 24 V DC. The battery voltage may fluctuate within a range from 18 V to 32 V.

The battery voltage must not fall below 15 V during the start-up process, otherwise the **SAFI** and the **MPM** may fail.

2.5.2 185V power supply

MPM (**M**ORIS **P**ower **M**odule) is a DC-DC converter and supplies the **MORIS** with a DC current at 185 V from the 24 V grid. The power transmission is activated via a digital input. A safety contact reports the output of the **MORIS** power supply to the control system.

The **MPM** supplies 2.5 A rms at a nominal input voltage of 24 V with an 80% efficiency.

Nominal input voltage	24 V DC
Maximum power consumption at rated voltage	24.1 A
Nominal output voltage	185 V DC
Maximum output current:	2.5 A rms
Operating temperature range	-20°C to +75°C

Further information on the **MPM** can be found in the relevant Technical Instruction TI 1502-0069.

2.5.3 Pickup signal amplifier SPA24

SPA24 (**S**AFI **P**ick-up **A**mplifier **24**V), is a pickup amplifier which processes the camshaft, reset and ring gear signals into the form required for the **SAFI**.

A voltage of at least 3 V is required to identify passive pickup signals.

Rated power consumption	170 mA
Nominal input voltage	DC 24 V

GE Proprietary Information: CONFIDENTIAL! Use or disclosure of data contained on this sheet is subject to the restrictions on the cover or on the first page.

Operating temperature range	0°C to + 70°C
Max. power per output	100 mA

Further information on the **SPA24** can be found in the relevant Technical Instruction, TI 1502-0072.

2.5.4 SAFI

The **SAFI** power supply may fluctuate within a range from 18 V to 32 V ±10% residual ripple.

Rated power consumption	175 mA
Nominal input voltage	DC 24 V
Operating temperature range	-25°C to 85°C
Input voltage range for signals	15 – 32 V DC

Further information on the **SAFI** can be found in the relevant Technical Instruction, TI 1502-0071.

3 Safety information

3.1 General

All work on the engine is governed in all respects by the guidelines in Technical Instruction "TI 2300-0005 Safety instructions" and in particular the guidelines for ignition systems.

Extremely dangerous voltages can be produced during the self-test and engine operation (primary power supply of 185V to the ignition coil and high voltage in excess of 40 kV on the secondary side).

Currents of up to 100A occur during operation. Improper use may result in a risk of injury or death due to electric shock!

People wearing a pacemaker are not permitted to enter the engine room and carry out work on the ignition system.

Before assembly or repair work on the ignition system, the engine must be shut down and secured to prevent unauthorised starting and the self-test disabled.

Before working on the ignition system, you must disconnect the power supply to **MORIS** and check to ensure that the system is dead.

If you do not switch off the power before connecting the system, people may be exposed to extremely dangerous voltages or suffer electric shock.

GE Proprietary Information: CONFIDENTIAL! Use or disclosure of data contained on this sheet is subject to the restrictions on the cover or on the first page.

Before starting the ignition system, ensure that all parts of the ignition unit have been installed and connected in accordance with instructions.

3.2 Ignition module

When working on the ignition rail system, read the instructions displayed there.

You are not permitted to touch the connection socket or replace the ignition module while the 185 V power supply is live, as indicated by the red LEDs.

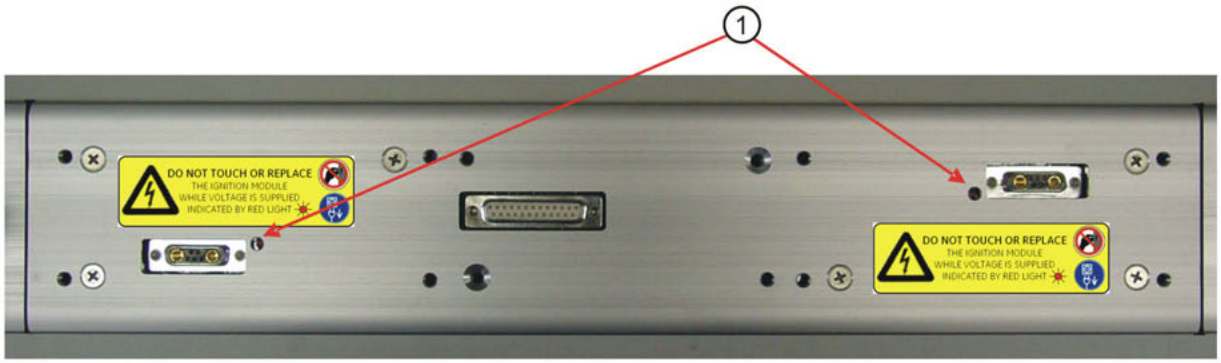

1	red LED

Before replacing **MORIS** components, disconnect the 24 V und 185 V power supplies to the MORIS and check to ensure that the system is dead. To do so, remove both connector plugs from the connection module for the power supply to the **MORIS** rail and check the LED located underneath an **M coil** to ensure that the 185 V voltage is dead.

GE Proprietary Information: CONFIDENTIAL! Use or disclosure of data contained on this sheet is subject to the restrictions on the cover or on the first page.

4 Installation

4.1 Mounting the ignition system on the engine

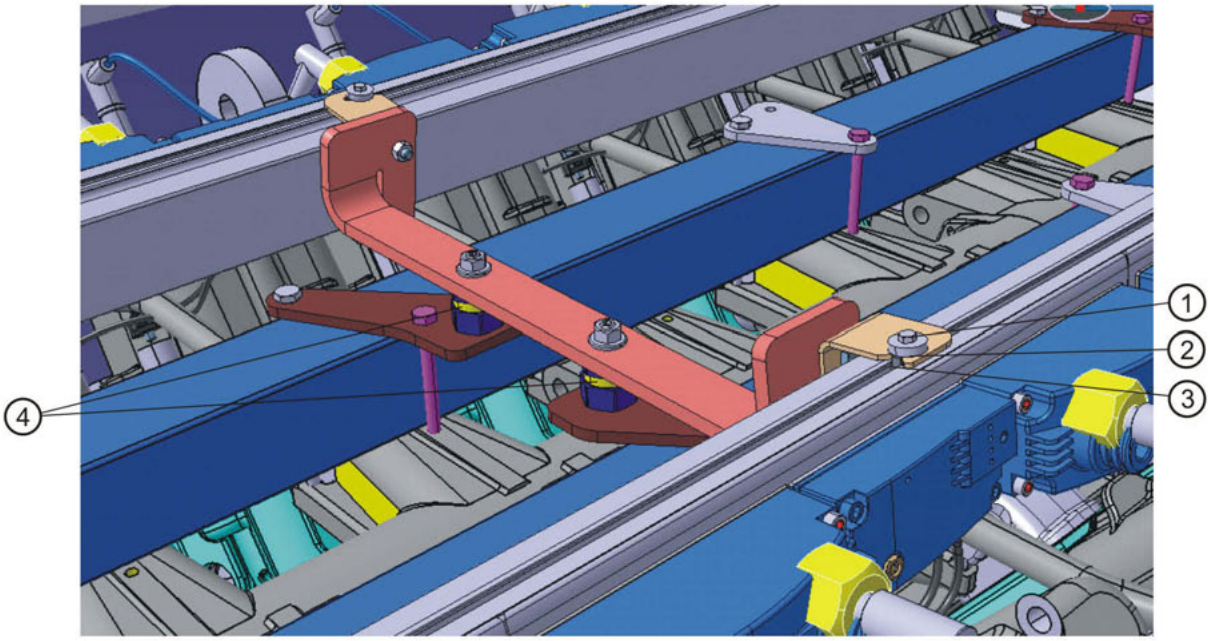

Example of a mounting on the type 4 engine			
①	M5 x 20 mm screw	③	M5 x 20 mm T-slot nut
②	Dished washer	④	Metal cushion-type damper

Metal cushion-type dampers are used to protect the structure of the **MORIS** rails from vibration.

The rails are secured to the mounting on the engine by means of M5 x 20 mm T groove slide nuts, M5 x 12 mm mounting bolts and dished washers.

4.2 Earthing the ignition system

Connect the **MORIS** rails to the engine earth using an earthing cable at least 2.5 mm2 in diameter.

One M6 x 12 mm bolt is provided at each connection and end module to connect the earthing cable to the rail.

GE Proprietary Information: CONFIDENTIAL! Use or disclosure of data contained on this sheet is subject to the restrictions on the cover or on the first page.

4.3 Mounting and adjusting the pickups on the engine

The mounting and adjustment of pickups is described in TI 1502-0072 – **SPA24**.

4.4 Replacing components

Please read the guidelines and safety instructions in Section 3 – Safety information – before replacing any **MORIS** component.

Each time you fit or remove a **MORIS** component, inspect the gaskets for damage and replace if necessary. This is the only way to guarantee that the system as a whole remains permanently watertight (IP54).

4.4.1 spark plug connector

To replace the spark plug connector, loosen the union nut on the coil terminal and the two M8 nuts of the double-end studs on the valve cover.

Each time you remove a spark plug connector, inspect the area of the adapter between the cylinder-head cover and the spark plug sleeve for oil leaks and if necessary replace defective O-ring gaskets.

4.4.2 Thermocouple

Tighten the assembly sleeves for the thermocouples using a 30 Nm tightening torque. The exhaust gas thermocouples must be manually tightened on SAFI and on the engine block using a 15 Nm torque. Connect the thermocouple for the left cylinder to the left-hand connector and the thermocouple for the right cylinder to the right-hand connector for the **SAFI**.

4.4.3 M coil

The **M coil** is fastened to the ignition module with four special M6 x 40 mm hexagon socket bolts (refer to Section 2.4.3 – tightening torques).

The first time a coil is fitted or replaced, the self-adhesive 3 mm NBR gasket supplied must be affixed to the **M coil**.

GE Proprietary Information: CONFIDENTIAL! Use or disclosure of data contained on this sheet is subject to the restrictions on the cover or on the first page.

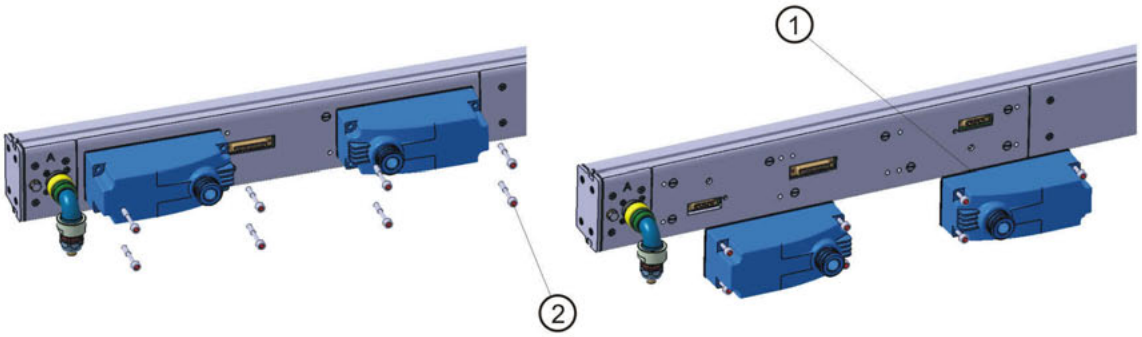

①	Self-adhesive 3 mm NBR gasket
②	M6 x 40 mm socket-head cap screw

Before disassembling, loosen the coil terminal on the spark plug connector. After fitting the **M coil**, reconnect the coil terminal on the spark plug connector and hand-tighten.

4.4.4 SAFI

SAFI is fitted using one M6 x 30 mm (bottom right) and M6 x 35 mm (top left) hexagonal socket bolt (refer to Section 2.4.3 – Tightening torques). The 3 mm thick NBR gasket supplied must be attached when fitting the SAFI.

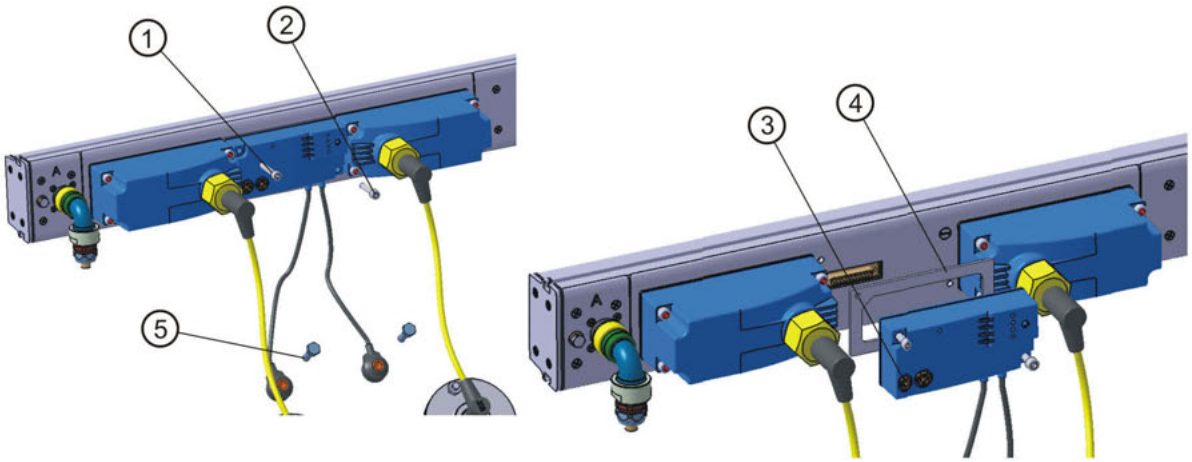

①	M6 x 35 mm socket-head cap screw
②	M6 x 30 mm socket-head cap screw
③	Connections for thermocouples

GE Proprietary Information: CONFIDENTIAL! Use or disclosure of data contained on this sheet is subject to the restrictions on the cover or on the first page.

④	3 mm NBR gasket
⑤	M8 x 25 mm socket-head cap screw

Loosen the thermocouples and the knock sensors before removing the **SAFI**. After fitting the **SAFI**, connect the thermocouples and tighten the knock sensors with the required tightening torque (refer to Section 2.4.3 – Tightening torques).

4.4.5 Ignition modules

Remove the **M coils** and the **SAFI** before disassembling the ignition module. Next, loosen the eight M5 x 12 mm countersunk screws and pull the ignition module off the rail using two M6 bolts.

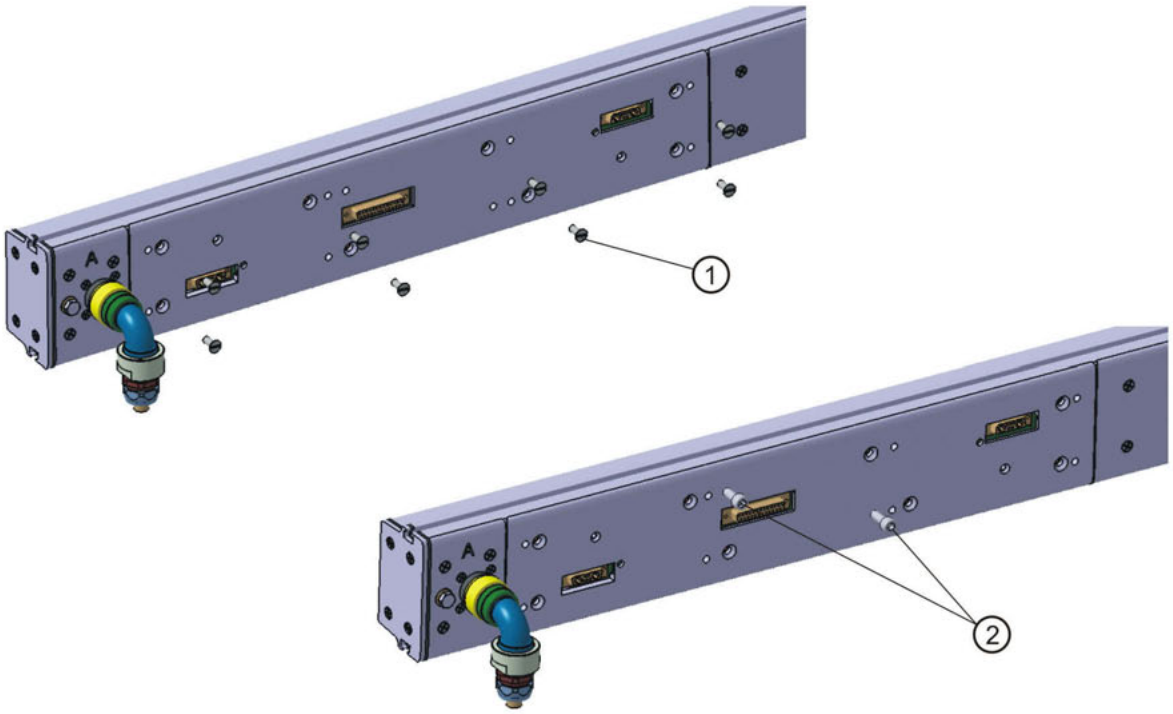

①	M5 x 12 mm countersunk screw (8x)
②	M6 bolts for the ignition module extension

Under no circumstances should you use a screwdriver to pry the ignition module out of the rail. Otherwise, you will damage the O-ring packing cord and the system will no longer be guaranteed watertight.

Before fitting, check all the gaskets on the ignition module.

GE Proprietary Information: CONFIDENTIAL! Use or disclosure of data contained on this sheet is subject to the restrictions on the cover or on the first page.

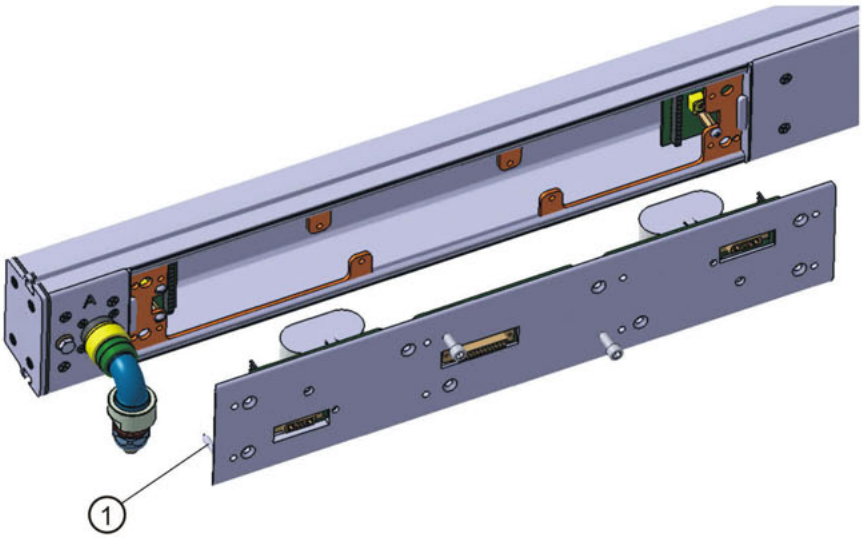

①	Guide pin

Using the guide pins to keep it as parallel as possible to the rail, push the ignition module carefully and without exerting excessive force into the rail. If excessive force is required, you should check for damage around the gaskets, around the plug-in connectors both on the ignition module (bent-off pin in 15-pole ODU connector block) and on the sockets on the rail (15-pole socket terminal strip).

After fitting the ignition module, tighten the M5 x 12 mm mounting bolts with the appropriate tightening torque (refer to Section 2.4.3 – Tightening torques).

4.4.6 Connection and end modules

To replace a connection or end module, detach the rail from the engine.

The next step is to remove the adjacent ignition module (refer to Section 4.4.5 – Ignition modules).

Then remove the end cover with the four M4 x 9 mm bolts, loosen the four M4 x 9 mm bolts on the cover of the connection or end module, remove the gasket and push the module out of the rail.

Mount the new module in reverse order. When installing the module, ensure that it is mounted exactly flush with the end of the rail. Incorrect positioning can cause problems when you come to plug in the ignition module.

GE Proprietary Information: CONFIDENTIAL! Use or disclosure of data contained on this sheet is subject to the restrictions on the cover or on the first page.

Before re-installing the ignition module, ensure that the coding switch is adjusted to the same setting as with the replaced module and secure it with sealing varnish. The coding switch adjustment is described under Section 4.4.8 - "Setting the cylinder coding - 5.1.7 - Identifying the cylinder arrangement on the engine; and 7. - Cylinder coding.

4.4.7 Link modules

To replace a link module, detach the rail from the engine.

The next step is to remove the adjacent ignition module (refer to Section 4.4.5 – Ignition modules) either towards the connection module or towards the end module, depending on the number of modules to be removed.

Then remove the connection or end module (refer to Section 4.4.6 – Connection and end modules).

Before removing the link modules, you should note down the current position of the individual modules so that you don't have to change the coding of the modules during the subsequent re-assembly process.

Now you can remove the gaskets and push the individual link modules out of the rail. In the case of type 6 engine link modules, the M4 x 9 mounting bolts must be loosened beforehand.

Set the same coding on the replaced link module as on the original link module (refer to Section 4.4.8 – Setting the cylinder coding, Section 5.1.7 – Identifying the cylinder arrangement on the engine and Section 7 – Cylinder coding).

To reassemble, push the link modules into the rail so that Pin 15 in the socket terminal strip is positioned level with the connection or end module.

The next step is to mount the connection or end module. Insert the gasket before screwing down the connection or end module (refer to Section 4.4.6 – Connection and end modules).

Now you can plug in the individual ignition modules, not forgetting to insert the gaskets.

Once all the modules have been positioned and mounted, you can start to tighten the M5 x 12 mm and M4 x 9 mm mounting bolts (with O-ring) on the ignition modules and link modules (Type 6 engine only).

The last step is to mount the end cover. Check the gasket and replace if necessary.

4.4.8 Setting the cylinder coding

The coding signal is required so that the **SAFI** can be allocated to the cylinder position. In the case of the **MORIS**, a hexadecimal rotary selector switch is used to set the coding. The **SAFI** receives two bits of coding each from the right (2nd and 4th bit) and left side (1st and 3rd bit) of the ignition module.

GE Proprietary Information: CONFIDENTIAL! Use or disclosure of data contained on this sheet is subject to the restrictions on the cover or on the first page.

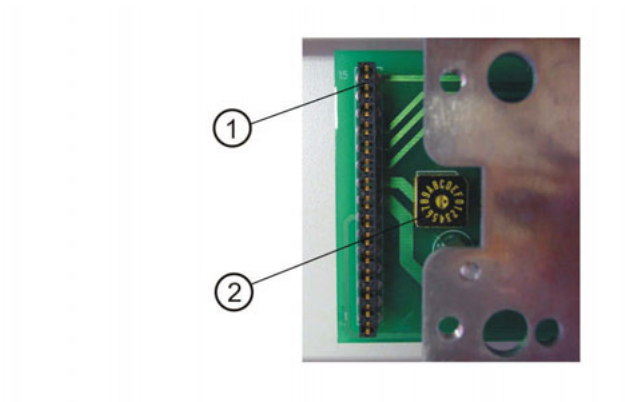

Coding switch for type 4 engine link module

①	Pin 15 of the socket terminal strip.
②	hexadecimal coding switch

The coding on the connecting, coupling and end modules must be set as shown in the table in Section 7 – Cylinder coding.

Check: The current coding is displayed on a flashing CAN LED while the **SAFI** is booting up. The precise description of this **SAFI** function can also be found in Section 5.1.7 - Identifying the cylinder arrangement on the engine.

5 Operation

The **MORIS** is operated and controlled via the **dia.ne XT** visualisation system and regulated by means of the **SAFI** (refer to the Technical Instruction for **SAFI** – TI 1502-0071).

The general diagram below shows in schematic form the structure of the control and regulation circuit of the **MORIS** ignition system.

GE Proprietary Information: CONFIDENTIAL! Use or disclosure of data contained on this sheet is subject to the restrictions on the cover or on the first page.

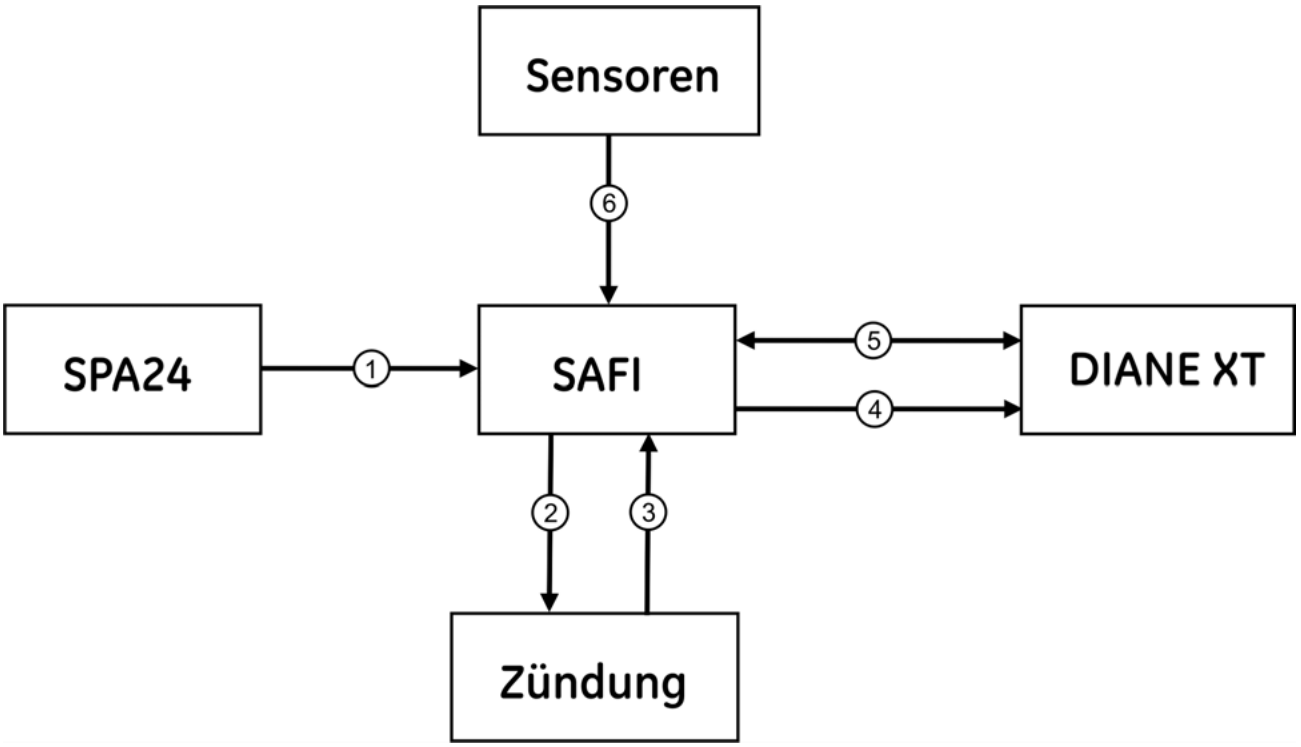

①	Pick-up signals
②	Ignition control system
③	Ignition feedback Voltage supply Cylinder coding
④	MORIS fail-safe loop
⑤	CAN
⑥	Analog signals
Sensors	Sensors

5.1 Ignition control system

The ignition functions are enabled when **SAFI** is operated in combination with the **MORIS** ignition system. **SAFI** triggers the ignition, adjusts the ignition sparks in accordance with the set parameters and monitors the electrical ignition process.

MORIS operates in 3 phases.

Phase 1 – Producing the ignition spark

Phase 2 – Regulating the current in the ignition spark

Phase 3 – De-energising and synchronising for possible re-ignition after spark interruption

GE Proprietary Information: CONFIDENTIAL! Use or disclosure of data contained on this sheet is subject to the restrictions on the cover or on the first page.

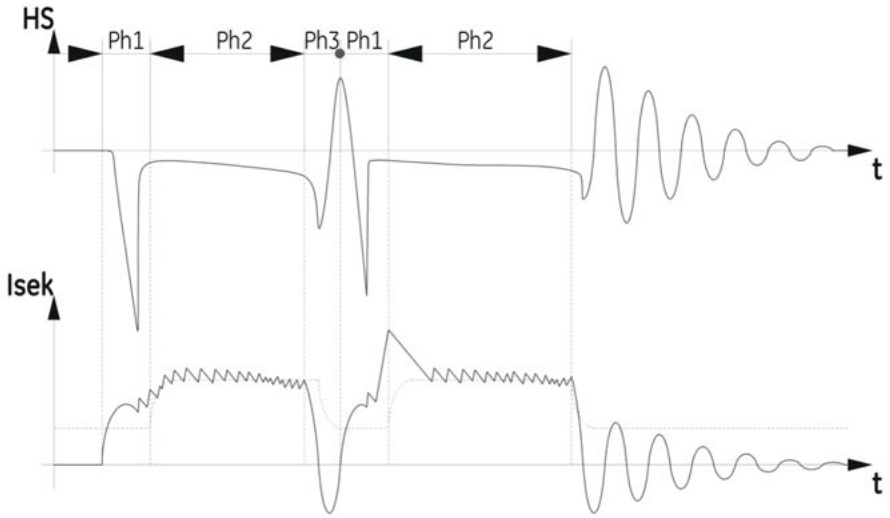

HS	Voltage at the spark plug	Ph1...3	Phases 1 to 3
Isec	Current in the high-voltage circuit	t	Time

5.1.1 Phase 1 – Producing the ignition spark

At the ignition point, **SAFI** switches the energy supplied by **MPM** and stored in the output stage to the ignition coil. The first pulse, which is determined by the characteristics of the ignition coil, produces the ignition spark. After a specified time, a response must be received from **MORIS** to indicate that the current flow has been established in the secondary circuit. If this response is not received, the error message "**MORIS** hardware error" is displayed and the ignition process aborted.

The ignition system also transmits a conditioned voltage signal to display the high voltage. **SAFI** analyses the peak value of this signal and transmits the ignition voltage value averaged over 10 cycles.

5.1.2 Phase 2 – Regulating the current in the ignition spark

Once the ignition spark has been produced, **MORIS** adjusts the current in the ignition spark to the specified setpoint value which is determined by the ignition current flow. If the current in the ignition spark too low, more electrical energy is supplied to the ignition coil and when the setpoint value has been reached the energy supply to the ignition coil is disconnected.

The following curves can be selected for the ignition current flow:

GE Proprietary Information: CONFIDENTIAL! Use or disclosure of data contained on this sheet is subject to the restrictions on the cover or on the first page.

Ignition current flow - 0	Ignition current flow - 1 constant
Parameters can be set for ignition current flow – 0, which is used for trial purposes.	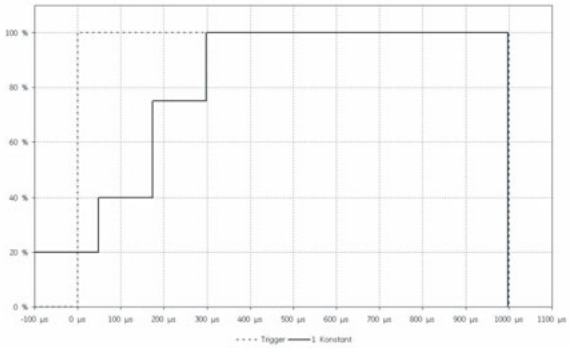
Ignition current flow - 2 Steep rise	Ignition current flow - 3 flat rise
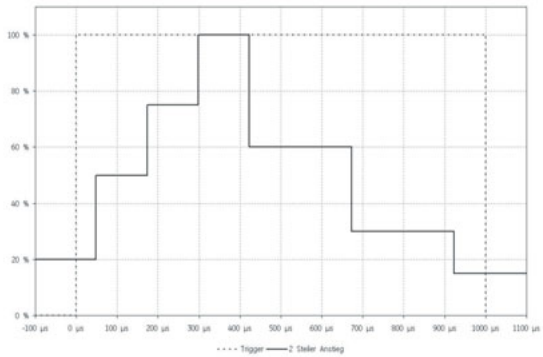	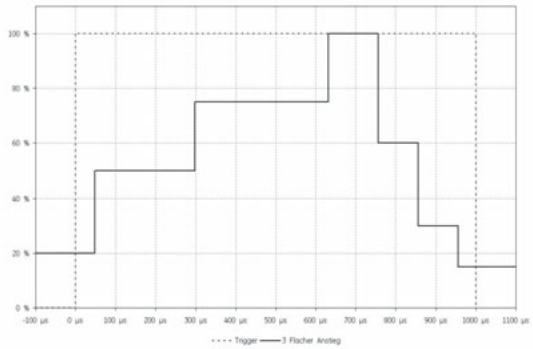
Ignition current flow - 4 Trapezium	Ignition current flow - 5 Straight line with tail
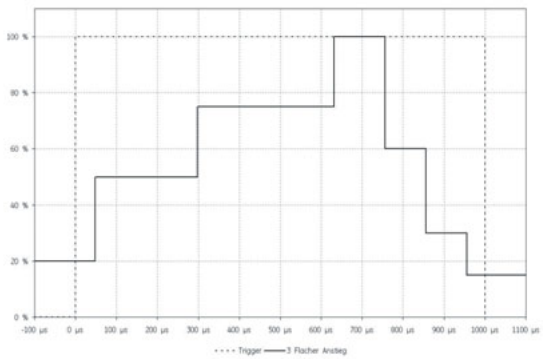	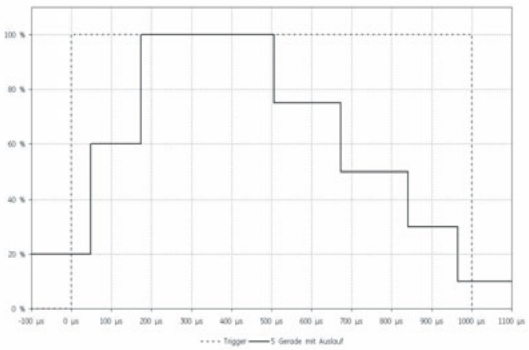

GE Proprietary Information: CONFIDENTIAL! Use or disclosure of data contained on this sheet is subject to the restrictions on the cover or on the first page.

Ignition current flow - 6 Rise with straight line	Ignition current flow - 7 Needle
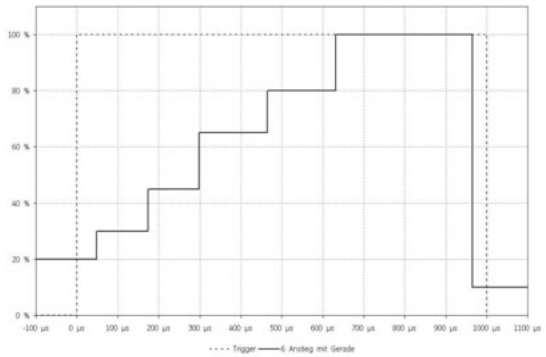	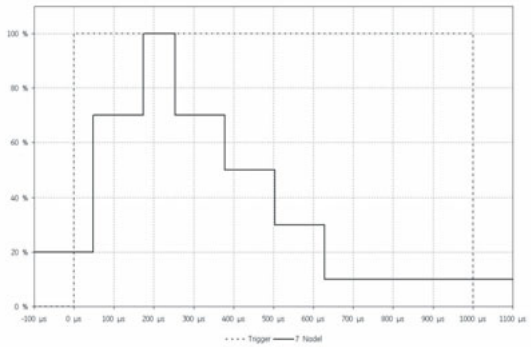

5.1.3 Phase 3 – De-energising and synchronising for possible re-ignition after spark interruption

If the system is overloaded, the **MORIS** is de-energised by disconnecting the energy supply to the ignition coil and prepared for re-ignition as soon as conditions in the ignition system permit. The time for the re-ignition is calculated by **SAFI** from the conditions in **MORIS** and initiates Phase 1 – producing the spark.

The ignition system issues a response. **SAFI** uses this response to check the function of the ignition system and generates messages accordingly.

5.1.4 Pickup signals

SAFI requires two digital signals to detect the engine running conditions. The three analogue pickup signals are converted to two digital signals by the **SPA24** (refer to TI 1502-0071 – **SAFI** and TI 1502-0072 - **SPA24**).

5.1.5 Visual displays on the SAFI

The device has five LED displays, of which the "STATUS" LED is in three colours.

GE Proprietary Information: CONFIDENTIAL! Use or disclosure of data contained on this sheet is subject to the restrictions on the cover or on the first page.

Description	Colour	Meaning
POWER	Green	Power supply
STATUS	Green	Firing up
	Red	Error
	Yellow	Booting up
CAM	Yellow	Synthetic camshaft/reset impulse
TRIGGER	Yellow	Trigger impulse
CAN	Yellow	CAN bus activity

5.1.6 Identifying the cylinder arrangement in the engine

In each cabling rail, the position of **SAFI** on the engine is identified by the cylinder coding (refer to Section 4.4.8 – Setting the cylinder coding). **SAFI's** detection and verification operations are described in Technical Instruction TI 1502-0071.

5.1.7 Adjusting the reset position

After the engine has been started, an ignition timing strobe must be used to compare the ignition point on the fly-wheel with the ignition point value shown on the engine control system.

If the value displayed does not match the actual value on the flywheel, the engine must be shut down, the value for the reset signal corrected and the value rechecked. (see TI 1502-0071 **SAFI** for the precise procedure).

The engine should not be put under load until the current ignition point matches the ignition point displayed on the dia.ne XT.

GE Proprietary Information: CONFIDENTIAL! Use or disclosure of data contained on this sheet is subject to the restrictions on the cover or on the first page.

5.1.8 High-voltage measurement

It is possible to use the high-voltage measurement system on the **M coil** to measure the **SAFI** ignition voltage and communicate this to the engine control system via the CAN bus.

In doing so, **SAFI** communicates the average value from 10 measurement cycles to the engine control system.

In the ignition self-test, **dia.ne XT** determines the maximum values of the individual cylinders in order to facilitate diagnosis of the high-voltage supply from the **M coils**.

The high-voltage measurement system does not generate trip-producing error messages.

5.2 Control and visualisation

5.2.1 Parameter setting

General ignition parameters

The following parameters have been saved in the **Ignition** parameter list.

- Ignition point for gas types 1 - 4

These settings lie between the value for the earliest and the latest ignition point:

- Earliest possible ignition point
- Latest possible ignition point
- Overspeed
- Misfire control

MORIS system parameters

The following parameters have been saved in the **Ignition – MORIS** parameter list.

- Settings
- combustion duration
- Maximum ignition current
- ignition current flow
- Coil type
- Power unit output for MORIS

GE Proprietary Information: CONFIDENTIAL! Use or disclosure of data contained on this sheet is subject to the restrictions on the cover or on the first page.

- Monitoring functions
- Ignition error rates
- Tolerance for combustion time deviation

Parameters for MORIS hardware

The coil type determines the hardware design of the **MORIS** ignition coil. The necessary parameters are permanently stored in the Task.

The ignition current flow determines the spark characteristics. The necessary parameters are permanently stored in the Task.

Coil type 0 and ignition current flow 0 can be configured using the parameters in this menu and are used for testing new hardware designs. The parameters in this menu can be viewed and changed by User Level 45 and upwards.

Displays

5.2.2 Displays

In the CYL menus on the dia.ne XT you can switch between the screens for ignition point, ignition voltage, maximum ignition voltage and ignition output error.

The displays are always visible, irrespective of the user level.

Ignition timing point

The setpoint values of the ignition points of all the cylinders are displayed on this screen in bar and digital form.

Ignition voltage

The ignition voltages of all the cylinders are displayed in bar and digital form on this screen while the engine is running and during the self-test.

Maximum ignition voltage

The maximum values of the ignition voltages of all the cylinders are displayed in bar and digital form on this screen during the self-test. If the self-test is disabled, this screen is also disabled.

GE Proprietary Information: CONFIDENTIAL! Use or disclosure of data contained on this sheet is subject to the restrictions on the cover or on the first page.

Ignition output errors

The bar graph shows the current output error rates, where the maximum value, 10, denotes a complete failure of the cylinder concerned.

The digital values represent the maximum values which have occurred for error rates, and the error rates can be reset to 0 on the click of a button by User Level 10 and upwards.

5.2.3 Monitoring functions

CAN communication

SAFI communication with the engine control system is monitored as follows:

- All **SAFIs** must be communicating with the control system before the engine is started.
- When at standstill, the engine is prevented from starting after 25 seconds of interrupted communication with at least one **SAFI**.
- When in operation, the engine is shut down after 2 seconds of interrupted communication with at least one **SAFI**.

voltage supply failure

The ignition end stages of **MORIS** are powered by the **MPM** power units. The 185 V power supply is switched with engine start preparation and in the self-test.

The output voltage of the **MPM** power units for the **MORIS** output stages is monitored and displays the status via digital outputs. If these digital outputs become inoperative while the engine is running or if the 185 V power supply is not activated within 10 seconds when requested by the power unit, the message Ignition power supply failed is displayed and the gas valves are closed during engine operation.

Ignition running and gas valves opening

The message Ignition on is generated when all the **SAFIs** are displaying the message Output firing up. Only when it is certain that all the **SAFIs** are in Firing up condition can the gas valves be opened.

The gas valves close if the message Output firing up is not available for all the cylinders. In this case, the message Ignition off is generated (refer to Section 5.2.5 – Safety plan).

In the event of a shutdown, the ignition is deselected via the CAN bus and at the same time the 185 V power supply for the ignition is switched off and the gas valves closed.

Output errors

The combustion time of the ignition spark is measured and compared with the preset setpoint value. If the measured combustion time is outside the tolerance, this is analysed by **SAFI** as an error.

GE Proprietary Information: CONFIDENTIAL! Use or disclosure of data contained on this sheet is subject to the restrictions on the cover or on the first page.

If the number of errors over 10 ignition pulses exceeds the value for permissible error rates, **SAFI** issues the message Error rates for ignition time exceeded and from this generates a warning or the trip-producing error message Ignition output error.

The permissible deviation and the error rate over 10 ignition pulses are adjustable, where the value 0 disables the monitoring system.

Warning

If the **SAFI** error messages Error rate for combustion time exceeded is displayed on a maximum of one cylinder, the warning "Output error" is displayed with the operating notification for the cylinder.

Error message

The engine controller monitors all the cylinders and as soon as more than one cylinder is displaying the message Error rate for combustion time exceeded at the same time, the error message Ignition output error is generated with the operating notification for the cylinder concerned.

The error message with the operating notification for the cylinder is also displayed when the **SAFI** message Output firing up is missing from any cylinder when the engine is running.

Ignition hardware error

If the ignition coil is defective or no spark plug connector is present at the ignition coil output or no spark plug is connected, the message Ignition hardware error is displayed.

5.2.4 Possibility of diagnosis by self-test

The self-test is best activated from the screen Detail – Ignition – Current ignition voltage and Ignition voltage.

If the engine starts while the ignition system is in self-test mode, **SAFI** automatically switches off the self-test function.

The self-test is automatically de-activated after 10 minutes.

The current ignition voltage values during the self-test are displayed on the screen Detail – Ignition – Current Ignition voltage and maximum values of the ignition voltages of all the cylinders are displayed in bar and digital form on this screen Detail – Ignition – Maximum ignition voltage.

GE Proprietary Information: CONFIDENTIAL! Use or disclosure of data contained on this sheet is subject to the restrictions on the cover or on the first page.

5.2.5 Safety plan

Outline

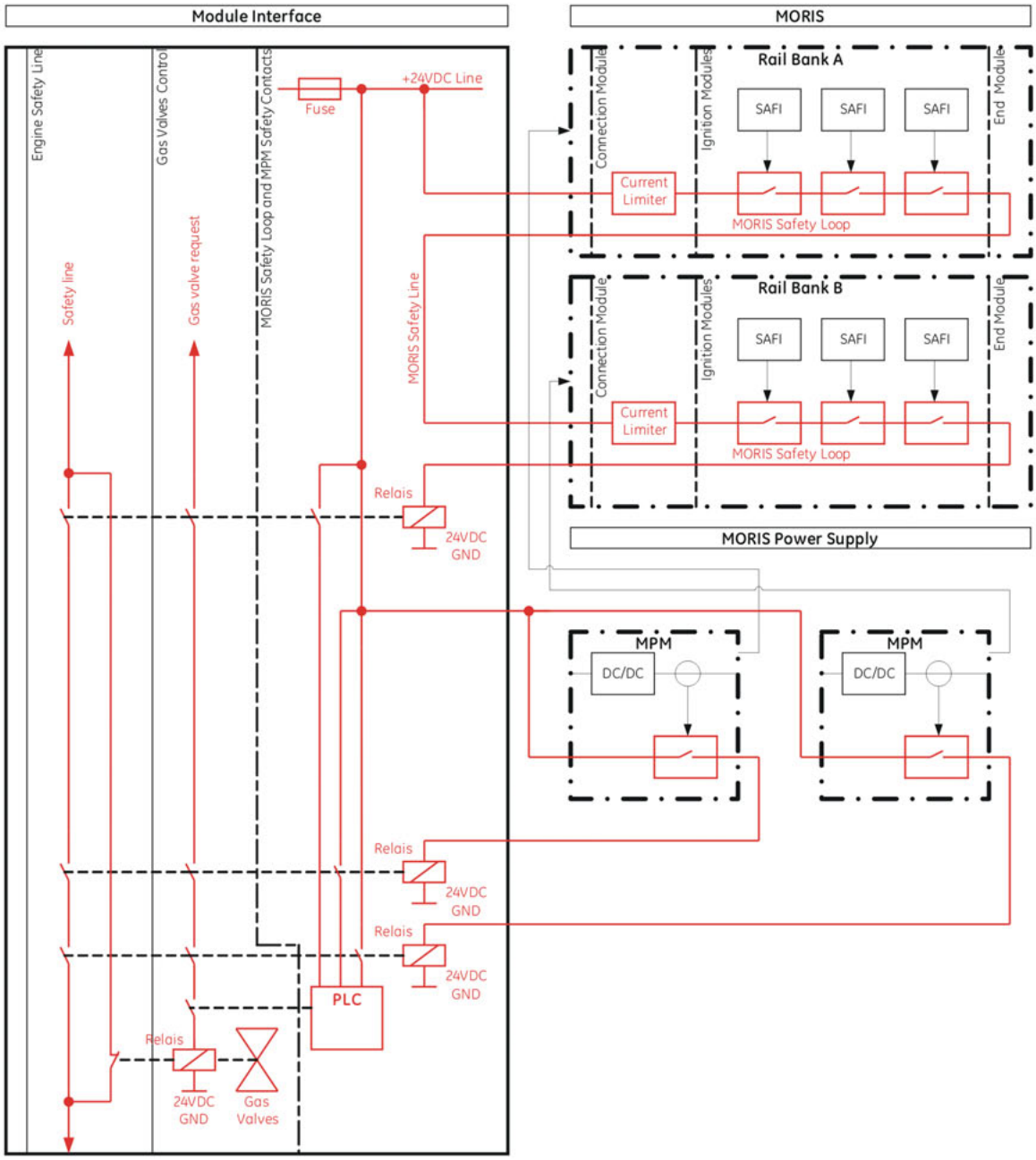

MORIS fail-safe loop

The safety plan for **MORIS** is based on a fail-safe loop which covers the entire **MORIS** rail system.

GE Proprietary Information: CONFIDENTIAL! Use or disclosure of data contained on this sheet is subject to the restrictions on the cover or on the first page.

The **MORIS** fail-safe loop is supplied with 24V DC and has been designed on the closed-circuit principle.

Each time the engine stops, the function of every contact integrated into the **MORIS** fail-safe loop is checked. If an error arises an alarm message is displayed and the engine is prevented from starting.

A self-resetting overload protection system (PTC) of 250 mA at an ambient temperature of 20°C is integrated into each connection module in the **MORIS** rail system as overcurrent protection. The constant current of the **MORIS** fail-safe loop must not exceed 120 mA.

The **MORIS** fail-safe loop is closed when all the **SAFIs** switch to "firing up" mode and closed when a **SAFI** de-activates the "firing up" mode or reaches the set overspeed.

Optocouplers are used to integrate the **SAFI** safety contacts into the **MORIS** fail-safe loop.

MPM safety contact:

The ignition end stages only work at a voltage exceeding 125 V. The **MPM** power supply is activated during the start preparation phase and the **MPM** safety contact is closed 2 seconds after an output voltage of 130 V has been reached.

If the **MPM** output voltage falls below 130 V, the safety contact is opened without delay.

Emergency stop fail-safe loop:

If the emergency stop fail-safe loop in the engine control system, the **MORIS** fail-safe loop or an **MPM** safety contact is opened, the start-up process is stopped and the gas valves closed.

The **MORIS** fail-safe loop is integrated into the engine control system's emergency stop fail-safe loop in series with one or two **MPM** safety contacts depending on the ignition power required for the engine. The engine control system's emergency stop fail-safe loop must be closed so that the engine can be started and operated.

The **MORIS** fail-safe loop or the **MPM** safety contacts can only open the engine control system's emergency stop fail-safe loop if the gas valves have already been opened.

The engine control system's emergency stop fail-safe loop is opened by the **MORIS** emergency stop fail-safe loop when the gas valves have been activated and the following conditions apply:

- a **SAFI** de-activates the "firing up" mode (e.g. due to a faulty pickup signal) or
- the preset overspeed point is reached
- **SAFI** loses its power supply or the processor freezes

GE Proprietary Information: CONFIDENTIAL! Use or disclosure of data contained on this sheet is subject to the restrictions on the cover or on the first page.

The engine control system's emergency stop fail-safe loop is opened by an **MPM** safety contact when the gas valves have been activated and the following conditions apply:

- the output voltage falls below 130 V

Emergency shutdown of ignition system

The engine control system's emergency stop fail-safe loop shuts down the engine. In this case, it is not only the gas valves that are closed when the emergency stop fail-safe loop is released, the **MPM** is also de-activated and the energy supply to the ignition system interrupted within 80 ms.

The way the **MORIS** fail-safe loop and the **MPM** are integrated into the module control system is shown in the schematic diagram of the plant concerned.

Controlling the gas valves

The **MORIS** fail-safe loop and the **MPM** safety contacts are integrated directly into the control system for the gas valves. The gas valves are de-activated when the **MORIS** fail-safe loop or an **MPM** safety contact has been opened.

The gas valves are activated from the engine control system. The engine control system opens the gas valves when it has a response indicating that all the **SAFIs** are in "firing up" mode and the **MPMs** have an output voltage of over 130 V, no error is detected and the operating condition of the engine permits it (e.g. time-delayed in the event of a purge start).

6 Diagnosis and troubleshooting

Only ignition-related messages are dealt with below.

Detailed information and descriptions of monitoring functions, operational, warning and error messages and setting parameters for the **SAFI** and **dia.ne XT** can be found in Technical Instruction TI 1502-0071 – **SAFI**.

When replacing components, always read the instructions in Section 4.4. – Replacing components – or in the technical instruction for the device concerned.

GE Proprietary Information: CONFIDENTIAL! Use or disclosure of data contained on this sheet is subject to the restrictions on the cover or on the first page.

6.1 ignition

6.1.1 Operating notification (Bxxxx)

Message number	Message	Description/Troubleshooting
B3225	Ignition On	All the cylinders are firing
B3226	Ignition Off	At least one cylinder is not firing
B3294	Ignition power reduction active Cylinder xx	Display shows cylinder with power reduction
B3278	Ignition output error Cylinder xx	Display shows cylinder with output error
B3283	Ignition hardware error Cylinder xx	Display shows cylinder with hardware error

6.1.2 Warnings (Wxxxx)

Message number	Message	Description/Troubleshooting
W3544	Ignition hardware error	No ignition current could be measured. Either no spark could be built up or no ignition coil has been fitted. If the parameters set are OK, the problem may be caused by an excessive ignition-voltage requirement or a hardware defect in the coil, the ignition module or the SAFI. A self-test of the ignition system is useful for fault-finding. Corrective measures: Check the air gaps of the spark plugs. Replace the defective ignition coil, the ignition module or the SAFI.
W3545	Ignition output errors	A cylinder has an output error caused by exceeding the preset tolerance for combustion time deviation, which is assessed by means of an error rate. The error is displayed when no spark is produced or the spark combustion time deviates from the preset tolerance value. There may be a hardware defect in the spark plug, the spark plug connector, the ignition coil, the ignition module or the SAFI. A self-test of the ignition system is useful for fault-finding. Corrective measures: Check the air gaps of the spark plugs. Check that the spark plug connector and its forward resistance (< 2.5 kOhm) have been fitted correctly. Replace the defective spark plug, the spark plug connector, the ignition coil, the ignition module or the SAFI. Check that the parameters for the combustion time deviation and error rate have been set.

GE Proprietary Information: CONFIDENTIAL! Use or disclosure of data contained on this sheet is subject to the restrictions on the cover or on the first page.

Message number	Message	Description/Troubleshooting
W3551	Ignition power reduction active	The ignition process had to be aborted before the set combustion time was reached as the power absorbed by the ignition system exceeded the maximum output of the power supply. If the parameters set are OK, the problem may be caused by an excessive ignition-voltage requirement or a defective coil. Corrective measures: Check the air gaps of the spark plugs. Replace the ignition coil.
W3552	Ignition power supply overloaded	When the engine is running, this error message is displayed immediately after the failure of the safety contact for the MPM power supply (WARNING OUT). The cause of the fault may be incorrectly set parameters for combustion time and ignition current setpoint. If the parameters set are OK, the problem may be caused by an excessive ignition-voltage requirement due to excessive turbulence at the spark plug or an incorrect type of spark plug has been installed or a defect has occurred in the MPM. Corrective measures: Check the parameters set for ignition current, combustion time and general power settings. Check the type of spark plug installed. Replace the MPM.

GE Proprietary Information: CONFIDENTIAL! Use or disclosure of data contained on this sheet is subject to the restrictions on the cover or on the first page.

6.1.3 Error messages (Axxxx)

Message number	Message	Description/Troubleshooting
A3338	Ignition output errors	The error is displayed when no spark is produced in more than one cylinder or the spark combustion time deviates from the preset tolerance (for corrective measures, see W3545).
A3344	Ignition power supply failed	When the engine is running, this error message is displayed immediately after the failure of the safety contact for the MPM power supply (REPLY OUT) and the engine is shut down. The MPM power supply is activated with start preparation. The error message is generated when a response is not received within 5 seconds from the MPM safety contact (REPLY OUT) indicating successful activation. Corrective measures: The power unit output parameter for the power units must match the output of the installed power units. Check the LEDs on the MPM for 24V power supply (POWER), the request (REQUEST), the response (WARNING) and safety contact (REPLY). Check the cabling to the rail and the wiring to the control system including the relay function. Replace the MPM as described in TI 1502-0069.
A3343	Ignition hardware error	There is a hardware defect or the hardware components, e.g. SAFI, MORIS, M coil and the spark plug connector have not been fitted correctly. Corrective measures: Find the defective component and replace it as described in TI 1502-0069 for the MPM or in Section 4.4 – Replacing components.
A3345	Ignition fail-safe loop	SAFI opens the fail-safe loop in the event of overspeed, a SAFI hardware error, a pickup error or an "Ignition off" command from the control system. Corrective measures: If no additional message is displayed, check the cabling in the fail-safe loop including all installed switching elements and if necessary replace defective devices (see also Section 4.4 – Replacing components). Otherwise, depending on any additional error message, inspect the devices concerned and if necessary adjust or replace them.

GE Proprietary Information: CONFIDENTIAL! Use or disclosure of data contained on this sheet is subject to the restrictions on the cover or on the first page.

6.2 High-voltage measurement

6.2.1 Operating notification (Bxxxx)

Message number	Message	Description/Troubleshooting
B3286	Ignition coil offset error Cylinder xx	Display shows cylinder position of SAFI with offset error.
B3287	Ignition voltage too low Cylinder xx	Display shows cylinder position of SAFI with excessively low ignition voltage
B3288	Ignition voltage too high in cylinder xx	Display shows cylinder position of SAFI with excessive ignition voltage
B3289	Average ignition voltage too high Cylinder xx	Display shows cylinder position of SAFI with excessive average ignition voltage.
B3290	Ignition voltage difference too high Cylinder xx	Display shows cylinder position of SAFI with excessive ignition voltage difference.

6.2.2 Warnings (Wxxxx)

Message number	Message	Description/Troubleshooting
W3546	Ignition coil offset error	There is no offset voltage in the coil. If this error affects one cylinder, the line connecting the ignition coil and SAFI may be damaged or the measuring device on the ignition coil may be defective. Corrective measures: To effect a diagnosis, you can also measure the offset voltage on the relevant pin of the SAFI connector plug while the engine is at standstill (see "terminal designation" in Section 8.1 – Ignition module). Replace the defective ignition coil, the SAFI or the ignition module.
W3547	Ignition voltage too low	The ignition voltage is too low, which can cause misfires. Possible causes are thread on the spark plug electrodes, the air gaps are too small, defect in the ignition coil or high-voltage sensor. Check the ignition system using the self-test function. Corrective measures: Check the parameters in the section on SAFI – HV measurement. Check the air gaps of the spark plugs and look out for thread. Replace the ignition coil.

GE Proprietary Information: CONFIDENTIAL! Use or disclosure of data contained on this sheet is subject to the restrictions on the cover or on the first page.

Message number	Message	Description/Troubleshooting
W3548	Ignition voltage too high	The ignition voltage is too high, which may result in damage to the high-voltage cables and the ignition coil. The ignition voltage could be so high that no spark is formed on the electrode, thereby causing misfires. Corrective measures: Check the parameters in the section on SAFI – HV measurement. The air gap in the spark plug electrodes may be too big and must be checked. An interruption in the high-voltage circuit between the ignition coil and the spark plug may also result in an excessive ignition voltage. Check the forward resistance of the spark plug connector (< 2.5 kOhm) and the spark plug. Defective high-voltage sensor in the ignition coil. Replace the ignition coil.
W3549	Average ignition voltage too high	The average value of all ignition voltages calculated in the DIANE is too high. Corrective measures: Check the parameters in the section on SAFI – HV measurement. Check the air gaps of the spark plugs.
W3550	Ignition voltage difference too high	The difference between the cylinders with the highest and lowest ignition voltage is too great. Corrective measures: Check the parameters in the section on SAFI – HV measurement. Check the air gaps of the spark plugs.

7 Cylinder coding

	8 cylinders	Coding		12 cylinders	Coding	
Bank	**Module**	**DEC**	**HEX**	**Module**	**DEC**	**HEX**
Bank A	Connection module A	0	0	Connection module A	0	0
	Link module 1	0	0	Link module 1	0	0
	Link module 2	3	3	Link module 2	3	3
	Link module 3	2	2	End module A	0	0
	End module A	1	1			
Bank B				Connection module B	1	1
				Link module 1	6	6
				Link module 2	5	5
				End module B	0	0

GE Proprietary Information: CONFIDENTIAL! Use or disclosure of data contained on this sheet is subject to the restrictions on the cover or on the first page.

	16 cylinders	Coding		20 cylinders	Coding	
Bank	**Module**	**DEC**	**HEX**	**Module**	**DEC**	**HEX**
Bank A	Connection module A	0	0	Connection module A	0	0
	Link module 1	0	0	Link module 1	0	0
	Link module 2	3	3	Link module 2	3	3
	Link module 3	2	2	Link module 3	2	2
	End module A	1	1	Link module 4	1	1
				End module A	4	4
Bank B	Connection module B	4	4	Connection module B	5	5
	Link module 1	5	5	Link module 1	4	4
	Link module 2	4	4	Link module 2	7	7
	Link module 3	7	7	Link module 3	2	2
	End module B	2	2	Link module 4	9	9
				End module B	8	8
	Type 6-MD 12 Cyl.	**Coding**		**Type 6-MD 16 Cyl.**	**Coding**	
Bank	**Module**	**DEC**	**HEX**	**Module**	**DEC**	**HEX**
Bank A	Connection module A	0	0	Connection module A	0	0
	Link module 1	0	0	Link module 1	0	0
	Link module 2	3	3	Link module 2	3	3
	End module A	0	0	Link module 3	2	2
				End module A	1	1
Bank B	Connection module B	1	1	Connection module B	4	4
	Link module 1	6	6	Link module 1	5	5
	Link module 2	5	5	Link module 2	4	4
	End module B	0	0	Link module 3	7	7
				End module B	2	2

24-Cyl. Bank A		Coding		24-Cyl. Bank B		Coding	
Bank	Module	DEC	HEX	Bank	Module	DEC	HEX
Bank A-A	Connection module A	0	0	Bank B-A	Connection module B	4	4
	Link module 1	0	0		Link module 1	7	7
	Link module 2	3	3		Link module 2	2	2
	End module A	0	0		End module B	8	8
Bank A-B	End module B	2	2	Bank B-B	End module A	1	1
	Link module 1	1	1		Link module 1	8	8
	Link module 2	4	4		Link module 2	11	B
	Connection module B	5	5		Connection module A	10	A

GE Proprietary Information: CONFIDENTIAL! Use or disclosure of data contained on this sheet is subject to the restrictions on the cover or on the first page.

8 Terminal designation

8.1 Ignition module

25-pole Sub-D connection socket for **SAFI**:

Pin	Designation	Description
1	HS2	High-voltage measurement signal from right ignition coil
2	HS1	High-voltage measurement signal from left ignition coil
3	STROM	Ignition current setpoint for left and right ignition output stage
4	IP1	Trigger signal for the left ignition output stage
5	CODE 4	Third bit of SAFI code for position sensing
6	CODE 1	First bit of SAFI code for position sensing
7	CODE 2	Second bit of SAFI code for position sensing
8	CAN-Low	CAN-Low
9	CAN-High	CAN-High
10	OFF	Emergency shutdown
11	CAM	Signal from the camshaft pickup
12	GND	Ground
13	+24 V	Power supply for SAFI
14	GND	Ground
15	GND	Ground
16	IP2	Trigger signal for the right ignition output stage
17	RM1	Response from the left ignition end stage
18	GND	Ground
19	CODE 8	Fourth bit of SAFI code for position sensing
20	RM2	Response from the right ignition end stage
21	CAN-GND	CAN-GND
22	n.c.	Unallocated
23	TRIGGER	Signal from ring gear
24	GND	Ground
25	n.c.	Unallocated

7w2 Sub-D socket for **M coil**:

Pin	Designation	Description
A1	185 V	185 V power supply for **M coil**
A2	IGBT	Switch contact for output stage
1	HV Sensor out	Output for high-voltage sensor
2	Isec	Electrical response signal
3	GND	Ground

GE Proprietary Information: CONFIDENTIAL! Use or disclosure of data contained on this sheet is subject to the restrictions on the cover or on the first page.

Pin	Designation	Description
4	+24V	Power supply for high-voltage sensor
5	n.c.	Unallocated

8.2 Connection module

5-pole MIL connector plug for 185 V power supply for **MORIS**:

Pin	Designation	Description
A	+185V	185 V power supply for **MORIS** output stages
B	GND	Ground/earth for 185V power supply
C	SC-A, SC-B	Bank A or B safety contact for **MPM** (GND potential)
D	GND	Ground/earth for 185V power supply
E	+185V	185 V power supply for **MORIS** output stages

10-pole MIL connector plug for 24V power supply, signal lines and CAN bus:

Pin	Designation	Description
A	+24V	Power supply for output stage and **SAFI**
B	GND	24V ground/earth
C	n.c.	Unallocated
D	CAM	CAM/RESET signal from **SPA24**
E	TRIGGER	TRIGGER signal from **SPA24**
F	CAN-LOW	CAN BUS low-level line
G	CAN-HIGH	CAN BUS high-level line
H	CAN-GND	CAN bus ground/earth line
I	SAFETY LOOP	**MORIS** fail-safe loop with **SAFI** safety contacts
Y	n.c.	Unallocated

8.3 End module

4-pole MIL connector plug for CAN bus and fail-safe loop connection line:

Pin	Designation	Description
A	CAN-LOW	CAN BUS low-level line
B	CAN-HIGH	CAN BUS high-level line
C	CAN-GND	CAN bus ground/earth line
D	SAFETY LOOP	**MORIS** fail-safe loop with **SAFI** safety contacts

GE Proprietary Information: CONFIDENTIAL! Use or disclosure of data contained on this sheet is subject to the restrictions on the cover or on the first page.

1 Description 2
1.1 General 2
2 Technical data 2
2.1 Protection class 2
2.2 Ambient conditions 3
2.3 Chemical resistance 3
2.4 Mechanical data 3
2.4.1 Vibration resistance 3
2.4.2 Dimensions 3
2.5 Electrical data 4
2.5.1 Rated data 4
2.5.2 Terminal designation 4
2.5.3 Safeguards 5
2.5.4 Earthing 5
2.5.5 Minimum diameter for 24 V power supply line: 5
3 Safety information 5
3.1 General 5
4 Installation 6
4.1 Components 6
4.2 Replacing the fuse 6
5 Operation 8
5.1 Displays on the MPM 8
5.2 Control and monitoring 8
5.2.1 Parameter setting 8
5.2.2 Control system 8
5.2.3 Monitoring 8
5.3 Safety plan 10
5.3.1 Outline 10
6 Diagnosis and troubleshooting 11
6.1 Warnings (Wxxxx) 11
6.1.1 Error messages (Axxxx) 12

GE Proprietary Information: CONFIDENTIAL! Use or disclosure of data contained on this sheet is subject to the restrictions on the cover or on the first page.

1 Description

Picture of the MPM

1.1 General

MPM (**M**ORIS **P**ower **M**odule) is a DC-DC converter and supplies the **MORIS** (**MO**dular **R**ail **I**gnition **S**ystem) with DC at 185 V from the 24 V grid.

One or more **MPMs** may be needed, depending on the engine application and the ignition output this requires.

Control and monitoring are provided by the engine control system, which indicates the status of the **MPM** by generating operational, warning and alarm messages (refer to TI 1502-0071 **SAFI** and TI 1502-0068 **MORIS**).

MPM has a safety contact which is integrated into the emergency stop fail-safe loop and the gas valve control system and is opened if a fault develops.

The following Technical Instructions are referred to in this document:

- TI 1502-0068 – **MORIS** (**M**odular **R**ail **I**gnition **S**ystem)
- TI 1502-0071 – **SAFI** (**S**ensor **A**ctor **F**unctional **I**nterface)

You will need these Technical Instructions to obtain a complete understanding of the **MORIS** functions.

2 Technical data

2.1 Protection class

MPM conforms to Protection Class IP21.

GE Proprietary Information: CONFIDENTIAL! Use or disclosure of data contained on this sheet is subject to the restrictions on the cover or on the first page.

2.2 Ambient conditions

Temperature limits	Storage	-25 ... + 70 °C
	In operation	-25 ... + 75 °C
Relative humidity	Storage	90 %, no dew
	In operation	85 %, no dew
Air pressure	up to 2,000 m above sea level	

2.3 Chemical resistance

MPMS has been developed to meet the specific GE Jenbacher requirements for chemical resistance to the antifreeze (glycol) in the engine cooling water, sulphurous acid, engine oil and UV radiation.

In general, the following limit levels for atmospheric pollution apply:

- Sulphur dioxide (SO2) 0.030 ppm
- Hydrogen sulphide (H2S) 0.010 ppm
- Nitrous oxide gases (NOx) 0.030 ppm
- Chlorine (C12) 0.010 ppm
- Hydrogen fluoride (HF) 0.010 ppm
- Ammonia (NH2) 0.500 ppm
- Ozone (O3) 0.005 ppm

2.4 Mechanical data

2.4.1 Vibration resistance

MPM is designed for vibration loads to an effective value of max. 20 mm/s at 10 - 300 Hz.

2.4.2 Dimensions

Dimensions of the housing (length x height x depth):

- without connector plug and top hat rail support: 220 x 108 x 45 mm
- including connector plug and top hat rail support: 260 x 108 x 56 mm

The minimum space required for the mounting, connection and ventilation of the power unit is 350 x 160 mm (refer to Section 4 Installation).

GE Proprietary Information: CONFIDENTIAL! Use or disclosure of data contained on this sheet is subject to the restrictions on the cover or on the first page.

2.5 Electrical data

2.5.1 Rated data

- Nominal input voltage: 24 V DC
- Input voltage range: 15 – 32 V DC
- Maximum power consumption at rated voltage: 24.1 A rms
- Starting current consumption: 45 A peak
- Nominal output voltage: 185 V DC
- Maximum output current: 2.5 A rms
- Efficiency: > 80%
- Operating temperature range: - 25 °C to + 75 °C
- Voltage range at inputs and outputs: 15 - 32 V DC
- Maximum permissible current for outputs: 120 mA

2.5.2 Terminal designation

Connector plug J1 – 24V IN

Pin	Designation	Description
1	24 V	24V power supply for **MPM**
2	24V GND	Earth for the 24V power supply
3	GROUND	earth connection

Connector plug J2 - Interface

Pin	Designation	Description
5	WARNING-OUT	Response contact warning for 185V output voltage
4	REPLY-OUT	Response contact error for 185V output voltage
3	24V FOR REPLY	Input for the 24V power supply to the response and safety contact
2	REQUEST-OUT	24V earth for the request signal
1	REQUEST-IN	+24V request signal from the control system

Connector plug J3 – 185V OUTPUT

Pin	Designation	Description
1	185V-OUT-A	+185V output voltage for **MORIS** Bank A
2	185V-GND-A	185V earth for **MORIS** Bank A
3	SC-A	Safety contact for **MORIS** Bank A
4	185V-OUT-B	+185V output voltage for **MORIS** Bank B
5	185-GND-B	185V earth for **MORIS** Bank B
6	SC-B	Safety contact for **MORIS** Bank B

GE Proprietary Information: CONFIDENTIAL! Use or disclosure of data contained on this sheet is subject to the restrictions on the cover or on the first page.

2.5.3 Safeguards

The **MPM** is protected internally on the 24 V input side by a 30 A fuse against overloading and short-circuiting. Section 4.2 – Replacing fuses – describes how to change the fuse.

The safety and response contacts (REPLY-OUT and WARNING-OUT) are protected from overload current and short circuit by a PTC with 120 mA (250 mA at 20°C).

2.5.4 Earthing

The **MPM** is earthed via the earth contact of connector plug J1 – Pin 3 and the earth line must have a diameter of at least 2.5 mm².

2.5.5 Minimum diameter for 24 V power supply line:

The 24V supply line must have a minimum diameter of 4 mm² .

3 Safety information

3.1 General

All work on the engine is governed in all respects by the guidelines in Technical Instruction "TI 2300-0005 Safety instructions" and in particular the guidelines for ignition systems.

Extremely dangerous voltages can be produced during the self-test and engine operation (primary power supply of 185V to the ignition coil and high voltage in excess of 40 kV on the secondary side).

Currents of up to 100A occur during operation. Improper use may result in a risk of injury or death due to electric shock!

People wearing a pacemaker are not permitted to enter the engine room and carry out work on the ignition system.

Before assembly or repair work on the ignition system, the engine must be shut down and secured to prevent unauthorised starting and the self-test disabled.

Before working on the ignition system, you must disconnect the power supply to **MORIS** and check to ensure that the system is dead.

The capacitors in the **MORIS** rail are charged to 185 V during operation. A reverse voltage of up to 185V may therefore occur at the 185V connector plug.

If you do not switch off the power before connecting the system, people may be exposed to extremely dangerous voltages or suffer electric shock.

The plug-in connector (J1) of the **MPM** 24 V power supply must be locked.

Before starting the ignition system, ensure that all parts of the ignition unit have been installed and connected in accordance with instructions.

GE Proprietary Information: CONFIDENTIAL! Use or disclosure of data contained on this sheet is subject to the restrictions on the cover or on the first page.

4 Installation

4.1 Components

The **MPM** is mounted in the module interface. Sufficient air circulation must be provided around the fan outlet to ventilate the power unit properly.

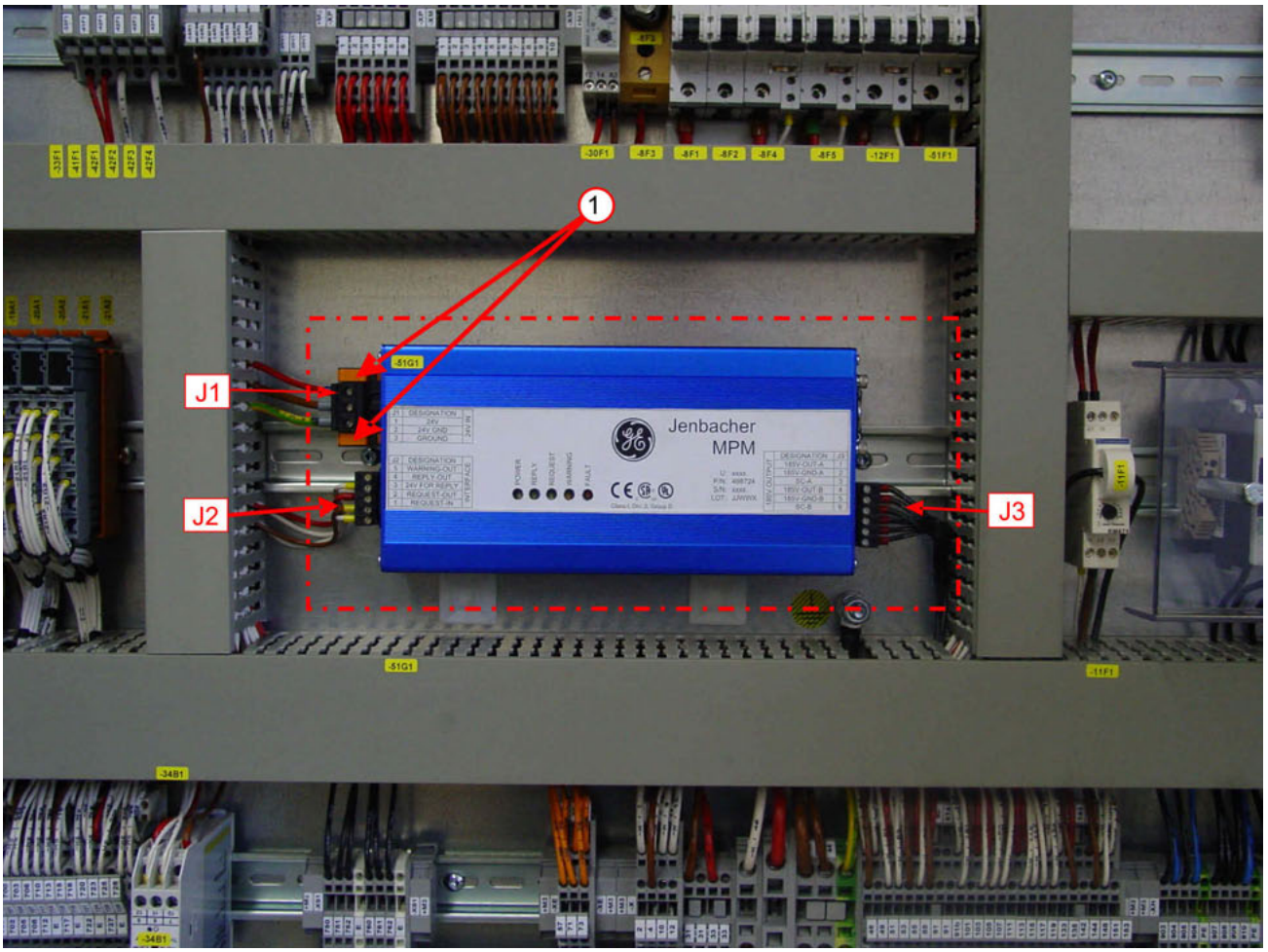

Photograph: Unit mounted in the module interface of the type 4 engine Min. space required: 350 x 160 mm

①	J1 latch

4.2 Replacing the fuse

To replace the 30 A fuse, cut the power to the **MPM** and disconnect all the connector plugs.

To disconnect the 24V connector plug (J1), press the latches (orange part of the plug) slightly downwards and push them out.

GE Proprietary Information: CONFIDENTIAL! Use or disclosure of data contained on this sheet is subject to the restrictions on the cover or on the first page.

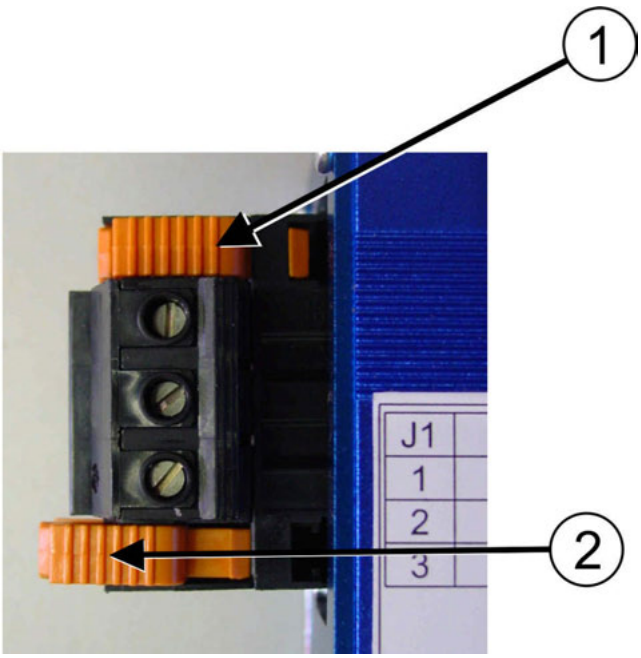

① Press the latch downwards.
② Push the latch outwards

Next, undo the 4 bolts securing it to the housing and remove the side panel.

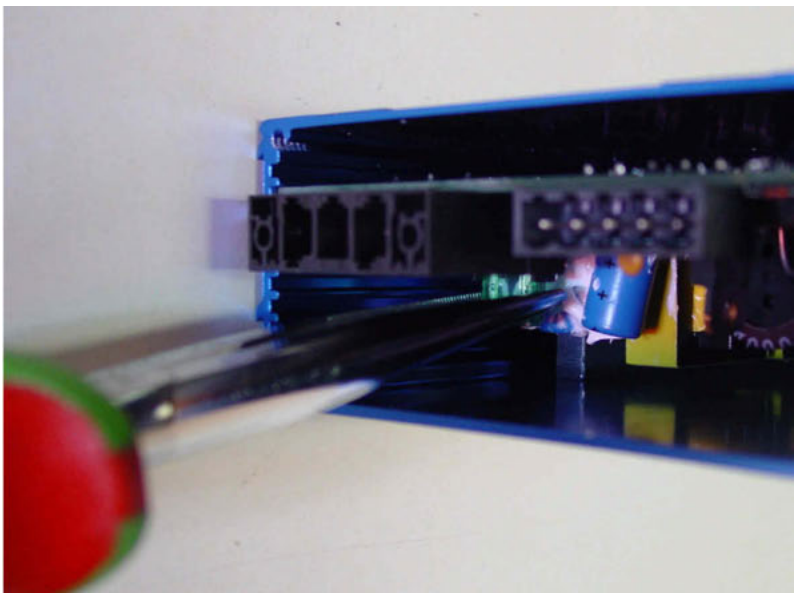

You can now replace the fuse with the aid of flat-nose pliers.

GE Proprietary Information: CONFIDENTIAL! Use or disclosure of data contained on this sheet is subject to the restrictions on the cover or on the first page.

5 Operation

5.1 Displays on the MPM

The status of the **MPM** is displayed on 5 LEDs:

Description	Colour	Meaning
POWER	Green	Display shows 24V power supply available
REPLY	Green	185V output voltage is displayed Response via REPLY-OUT safety contact
REQUEST	Green	Control system request is available 24V at the REQUEST-IN input
WARNING	Yellow	185V output voltage for t > 2 seconds below 180V Warning: W3552 "Ignition power supply overloaded"
FAULT	Red	185V output voltage is below 130V Error: A3344 "Ignition power supply failed"

5.2 Control and monitoring

Control and monitoring of the **MPM** are provided by the engine control system.

5.2.1 Parameter setting

The **MORIS** controller needs details of the power unit output(s) to calculate the maximum ignition spark output. The value for the total installed power unit output is indicated in the parameter manager on the screen Ignition – MORIS by the "power unit output" parameter in watts.

5.2.2 Control system

During engine start preparation or in the self-test, the **MPM** is activated via the REQUEST-IN input by setting a digital control output.

Der Rückmeldekontakt REPLY-OUT meldet die Ausgabe der 185V-Versorgungsspannung an die Steuerung.

5.2.3 Monitoring

The **MPM** has a SC-A and SC-B safety contact (Safety Contact Bank A and B) for each 185 V output. The safety contacts are laid in the cabling system to the **MORIS** rail and earthed in the connection module.

If only one output is used, connect the second safety contact to 185V-GND directly on the connector plug.

If this contact is opened due to disconnection of cabling or by a break in the line, the 185V outlet voltage is shut off immediately.

If the outlet voltage falls below 180V for more than 2 seconds, the warning is displayed via the WARNING-OUT contact. As soon as the rated voltage of 185V is restored the warning is automatically reset. The warning containing is displayed by the alarm management system with the message "W3552 Ignition power supply overloaded".

GE Proprietary Information: CONFIDENTIAL! Use or disclosure of data contained on this sheet is subject to the restrictions on the cover or on the first page.

If the output voltage falls below 130V, the 185V output voltage is shut off and the error message with the REPLY-OUT safety contact is reported to the control system. The shutdown is displayed by the alarm management system with the message "A3344 Ignition power supply failed".

GE Proprietary Information: CONFIDENTIAL! Use or disclosure of data contained on this sheet is subject to the restrictions on the cover or on the first page.

5.3 Safety plan

5.3.1 Outline

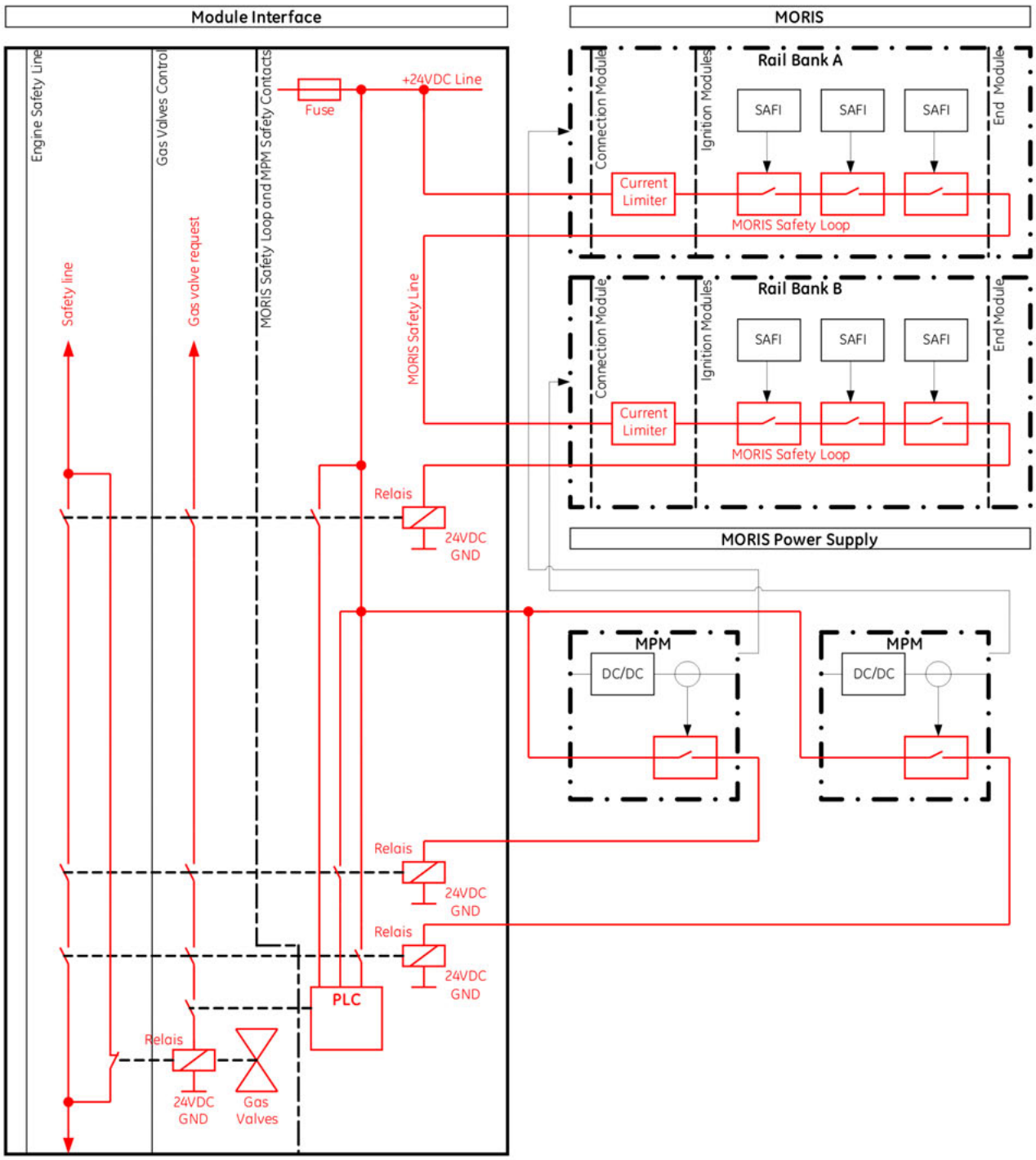

GE Proprietary Information: CONFIDENTIAL! Use or disclosure of data contained on this sheet is subject to the restrictions on the cover or on the first page.

The REPLY-OUT safety contact reports the output of the 185V power supply to the control system and at the same time is integrated into the emergency stop fail-safe loop and the gas valve control system. The gas valves can only be opened with the **MPM** safety contacts closed. The gas valves are closed immediately if the **MPM** safety contacts fail.

The **MORIS** fail-safe loop is integrated into the engine control system's emergency stop fail-safe loop in series with one or two **MPM** safety contacts depending on the ignition power required for the engine. The engine control system's emergency stop fail-safe loop must be closed so that the engine can be started and operated.

The engine control system's emergency stop fail-safe loop is opened by an **MPM** safety contact when the gas valves have been activated and the output voltage of 130V has not been reached.

The structure of the **MORIS** safety plan is described in greater detail in TI 1502-0068 – **MORIS** and in TI 1502-0071 – **SAFI**.

6 Diagnosis and troubleshooting

6.1 Warnings (Wxxxx)

Message number	Message	Description/Troubleshooting
W3552	Ignition power supply overloaded	When the engine is running, this error message is displayed immediately after the failure of the safety contact for the MPM power supply (WARNING OUT). The cause of the fault may be incorrectly set parameters for combustion time and ignition current setpoint. If the parameters set are OK, the problem may be caused by an excessive ignition-voltage requirement due to excessive turbulence at the spark plug or an incorrect type of spark plug has been installed or a defect has occurred in the MPM. Corrective measures: Check the parameters set for ignition current and combustion time. Check the type of spark plug installed. Replace the MPM.

GE Proprietary Information: CONFIDENTIAL! Use or disclosure of data contained on this sheet is subject to the restrictions on the cover or on the first page.

6.1.1 Error messages (Axxxx)

Message number	Message	Description/Troubleshooting
A3344	Ignition power supply failed	When the engine is running, this error message is displayed immediately after the failure of the safety contact for the MPM power supply (REPLY OUT) and the engine is shut down. The MPM power supply is activated with start preparation. The error message is generated when a response is not received within 5 seconds from the MPM safety contact (REPLY OUT) indicating successful activation. Corrective measures: The power unit output parameter for the power units must match the output of the installed power units. Check the LEDs on the MPM for 24V power supply (POWER), the request (REQUEST), the response (WARNING) and safety contact (REPLY). Check the cabling to the rail and the wiring to the control system including the relay function. Replace the MPM as described in TI 1502-0069.
A3345	Ignition fail-safe loop	SAFI opens the fail-safe loop in the event of overspeed, a SAFI hardware error, a pickup error or an "Ignition off" command from the control system. Corrective measures: If no additional message is displayed, check the cabling in the fail-safe loop including all installed switching elements and if necessary replace defective devices. Otherwise, depending on any additional error message, inspect the devices concerned and if necessary adjust or replace them.

GE Proprietary Information: CONFIDENTIAL! Use or disclosure of data contained on this sheet is subject to the restrictions on the cover or on the first page.

1 Description of the concept ... 3
1.1 Parts/design ... 3
1.2 Basic function ... 4
2 Safety information ... 5
3 Technical data ... 5
3.1 Protection class ... 5
3.2 Ambient conditions ... 5
3.3 Mechanical data ... 5
3.3.1 Vibration 5
3.3.2 Chemical requirements 5
3.4 Electrical data ... 6
3.4.1 Voltage supply 6
3.4.2 Power consumption 6
3.5 Exhaust-gas temperature measurement ... 6
3.6 High-voltage measurement ... 6
3.7 First-generation SAFI connections and displays ... 7
3.7.1 Terminal designations 8
3.8 Connections and displays from SAFI 2 ... 9
3.8.1 Terminal designations 9
3.8.2 Displays on the device 12
4 Components ... 13
4.1 Installation of the sensors ... 13
4.1.1 Knock sensors 13
4.1.2 Thermocouples 13
4.2 Identifying the cylinder arrangement in the engine ... 14
5 Pickup signals ... 14
5.1 Camshafts/reset signal ... 14
5.1.1 Adjusting the reset position 15
5.2 Flywheel signal (trigger signal) ... 15
6 Firmware ... 15
6.1 Firmware update ... 15
7 Implementation in the engine control system ... 16
7.1 Parameter manager ... 16
7.2 Alarm accompanying values ... 17
8 General function ... 18
8.1 Description of general functions ... 18
8.1.1 Pickup monitoring 18
8.1.2 Hardware monitoring 18
8.1.3 CAN communication 18
8.1.4 Software monitoring 19
8.1.5 Monitoring the temperature of the electronics 19
8.1.6 Parameter monitoring 19
8.2 Parameter setting ... 19
8.2.1 Engine data parameter list 19
8.2.2 SAFI parameter list 20
8.3 Displays ... 21
8.4 Trend display ... 21

GE Proprietary Information: CONFIDENTIAL! Use or disclosure of data contained on this sheet is subject to the restrictions on the cover or on the first page.

8.5 Operating notifications: 22
8.6 Warnings 22
8.7 Error messages 23
9 KLS function 24
9.1 Description of the function 24
9.1.1 Differences from the KLS98 24
9.2 Parameter setting 25
9.2.1 General knock parameters 25
9.3 Displays 27
9.4 Trend display 27
9.5 Operating notification 27
9.6 Warnings 28
9.7 Error messages 28
10 Ignition function 28
10.1 Description of the function 28
10.2 Parameter setting 29
10.2.1 Ignition parameters 29
10.2.2 MORIS 30
10.3 Displays 31
10.3.1 Ignition output errors 31
10.3.2 Ignition timing point 31
10.4 Trend display 31
10.5 Operating notification 31
10.6 Warnings 32
10.7 Error messages 32
11 Ignition voltage measurement function 33
11.1 Description of the function 33
11.2 Displays 33
11.3 Trend display 33
11.4 Parameter setting 34
11.5 Operating notification 36
11.6 Warnings 36
11.7 Error messages 37
12 Exhaust gas temperature measurement function 37
12.1 Description of the function 37
13 Speed measurement function 37
13.1 Description of the function 37
13.2 Displays 37
13.3 Operating notification 37
13.4 Warnings 37
13.5 Error messages 38

GE Proprietary Information: CONFIDENTIAL! Use or disclosure of data contained on this sheet is subject to the restrictions on the cover or on the first page.

1 Description of the concept

SAFI is fitted between two cylinders and performs a variety of measuring and monitoring functions depending on hardware design and software configuration, and controls and monitors the ignition system for both cylinders. **SAFI** stands for **S**ensor **A**ctor **F**unction **I**nterface

SAFI is a further development of the **KLS98** with a substantially increased range of functions.

The following functionalities are included in SAFI

- **KLS** – knock detection and valve-noise control limit
- **DMR** - combustion analysis (knocking, misfires, etc.) by measuring the combustion pressure curve
- **Port Injection** – controlling and monitoring the cylinder-specific injection into the inlet manifold Port Injection
- Ignition – control and monitoring of the **MORIS** ignition system
- Ignition voltage measurement – ignition-voltage requirement of the spark plugs
- Exhaust-gas temperature measurement
- Speed measurement

1.1 Parts/design

The designation SAFI is used in general in this document for the first-generation SAFI, and SAFI 2 for the further development Where a description refers exclusively to the first-generation SAFI or to SAFI 2, this will be stated in the description.

GE Proprietary Information: CONFIDENTIAL! Use or disclosure of data contained on this sheet is subject to the restrictions on the cover or on the first page.

Overview of part numbers

	First-generation SAFI	SAFI 2
SAFI with KLS function	411880 1200176	652092
SAI with DMR function	665426 435624	652439
Thermocouple		

1.2 Basic function

The **SAFI** boots up when the power supply is connected, after which all the parameters in **SAFI** are deleted and must be sent by the engine control system. The individual functions can only be activated via the CAN bus.

The **SAFI** has a digital output that sends signals to indicate that the ignition is operating and therefore ignition signals are being output. If the CAN communication fails during operation, the ignition system operation can be derived from the level of this output and appropriate responses carried out.

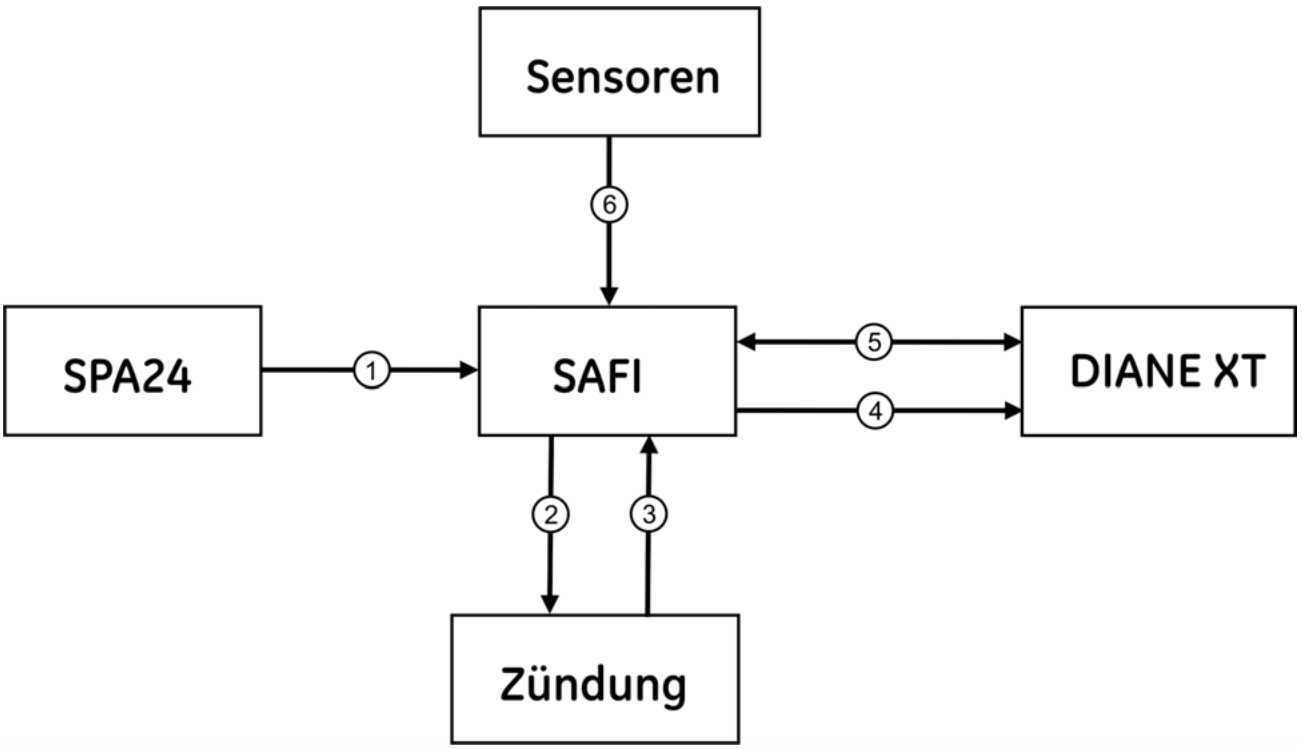

Sensors	Sensors
Ignition	Ignition
①	Pick-up signals
②	Ignition control system

GE Proprietary Information: CONFIDENTIAL! Use or disclosure of data contained on this sheet is subject to the restrictions on the cover or on the first page.

③	Ignition feedback Power supply Cylinder coding
④	MORIS Safety circuit
⑤	CAN
⑥	Analog signals

2 Safety information

Please observe the safety and hazard signs in the safety instructions (TI 2300-0005) and wear the appropriate personal protective equipment.

3 Technical data

3.1 Protection class

When fitted, SAFI achieves protection class IP54.

3.2 Ambient conditions

Temperature limits	Storage	-25 ... + 70 °C
	In operation	-25 ... + 85 °C
Rel. humidity	Storage	90 %, no dew
	In operation	85 %, no dew
Air pressure	up to 2,000 m above sea level	

3.3 Mechanical data

3.3.1 Vibration

SAFI must be protected from engine vibration when fitted. The supports designed for MORIS should be used. SAFI is designed for vibration loads to an effective value of max. 20 mm/s at 10-300 Hz.

3.3.2 Chemical requirements

SAFI has been developed to meet the specific GE Jenbacher requirements for chemical resistance to the antifreeze (glycol) in the engine cooling water, sulphurous acid, engine oil and UV radiation.

In general, the following limit levels for atmospheric pollution apply:

- Sulphur dioxide (SO2) 0.030 ppm
- Hydrogen sulphide (H2S) 0.010 ppm
- Nitrous oxide gases (NOx) 0.030 ppm

GE Proprietary Information: CONFIDENTIAL! Use or disclosure of data contained on this sheet is subject to the restrictions on the cover or on the first page.

- Chlorine (C12) 0.010 ppm
- Hydrogen fluoride (HF) 0.010 ppm
- Ammonia (NH2) 0.500 ppm
- Ozone (O3) 0.005 ppm

If pollution levels are higher, they must be approved separately by GE Jenbacher.

3.4 Electrical data

3.4.1 Voltage supply

SAFI is powered by a battery with a nominal voltage of 24 V. The battery voltage may fluctuate in a range from 15 V to 32 V ± 10% residual ripple.

3.4.2 Power consumption

The maximum power consumption of a first-generation **SAFI** is 175 mA. The maximum power consumption of a SAFI 2 is 130 mA.

3.5 Exhaust-gas temperature measurement

The exhaust gas temperature of each cylinder is measured by **SAFI** using type K NiCrNi thermocouples, for which SAFI is provided with cold junction compensation. The measurement accuracy corresponds to Class 2 for type K thermocouples as specified in EN 60584-2.

Temperature range:	tolerance
0 °C to 333 °C	± 2.5 K
333°C to 900°C	± 0,75%

Brief additional deviations of ± 5 K will occur in the event of rapid changes in SAFI's ambient temperature.

3.6 High-voltage measurement

High-voltage is measured over the entire range from 0 kV to 50 kV to an accuracy of ± 1 kV.

GE Proprietary Information: CONFIDENTIAL! Use or disclosure of data contained on this sheet is subject to the restrictions on the cover or on the first page.

3.7 First-generation SAFI connections and displays

GE Proprietary Information: CONFIDENTIAL! Use or disclosure of data contained on this sheet is subject to the restrictions on the cover or on the first page.

①	LEDs	③	Knock sensors
②	Exhaust gas thermocouples		

3.7.1 Terminal designations

Sub D connector plug

PIN	Designation	Meaning
1	HV 2	High-voltage measurement signal from right ignition coil
2	HV 1	High-voltage measurement signal from left ignition coil
3	CURRENT	Ignition current setpoint for left and right ignition output stage
4	IP 1	Trigger signal for the left ignition output stage
5	CODE 4	Third bit of **SAFI** code for position sensing
6	CODE 1	First bit of **SAFI**code for position sensing
7	CODE 2	Second bit of **SAFI** code for position sensing
8	CAN low	CAN low
9	CAN high	CAN-High
10	OFF	Emergency shutdown
11	CAM	Signal from the camshaft pickup
12	GND	Ground
13	+24 V	Power supply for **SAFI**
14	GND	Ground
15	GND	Ground
16	ZZP 2 (IP2)	Trigger signal for the right ignition output stage
17	RM1	Feedback from the left ignition output stage
18	GND	Ground
19	CODE 8	Fourth bit of **SAFI** code for position sensing
20	RM2	Feedback from the right ignition output stage
21	CAN-GND	CAN-GND
22	n.c.	Unallocated
23	TRIGGER	Signal from ring gear
24	GND	Ground
25	n.c.	Unallocated

Exhaust gas thermocouples

Number	Designa-tion	Meaning
1	+	+ thermocouple connection
2	GND	Connection for shielding
3	-	- connection for thermocouple

GE Proprietary Information: CONFIDENTIAL! Use or disclosure of data contained on this sheet is subject to the restrictions on the cover or on the first page.

3.8 Connections and displays from SAFI 2

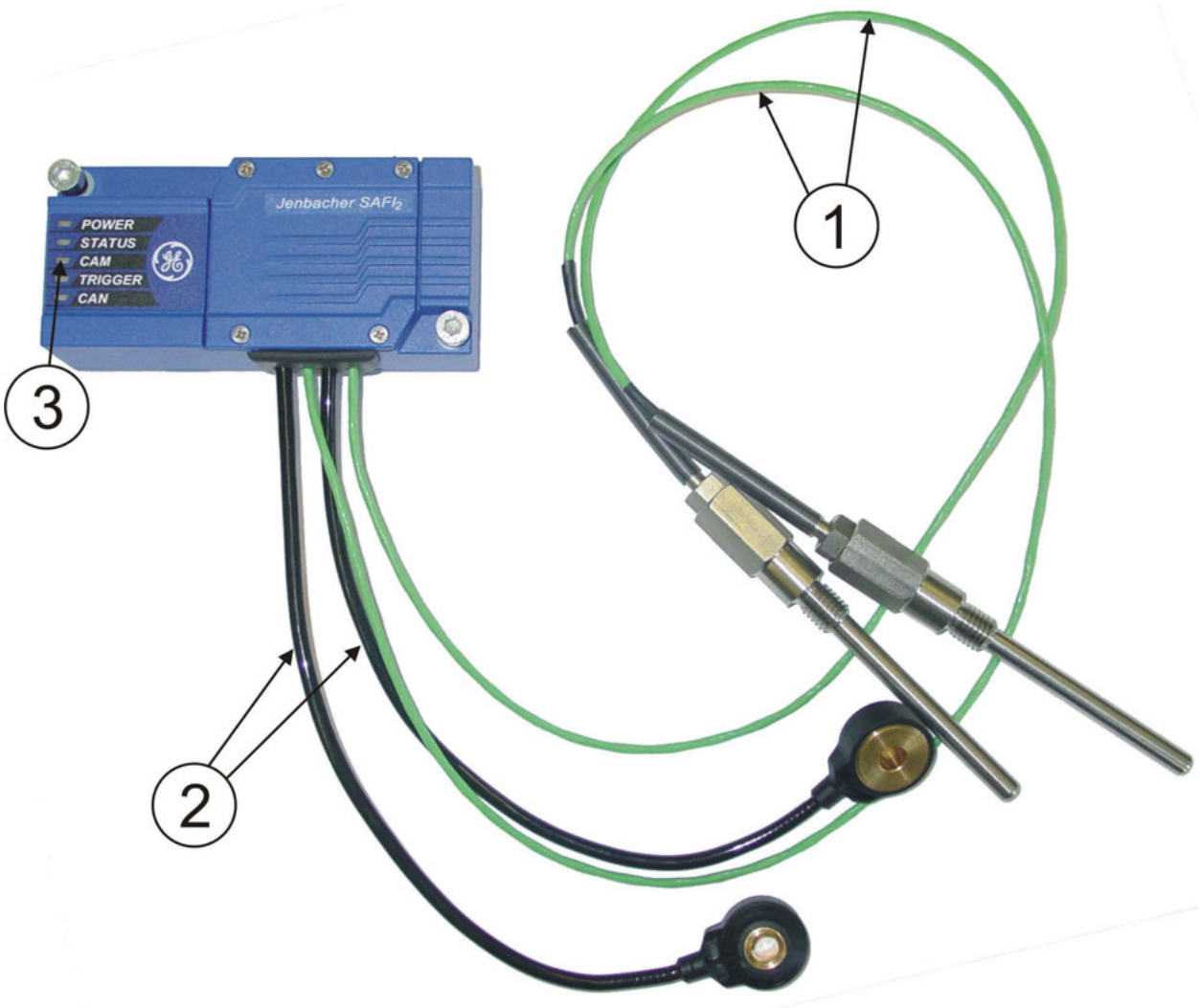

①	Exhaust gas thermocouples	③	LEADs
②	Knock sensors		

3.8.1 Terminal designations

Sub D connector plug

PIN	Designation	Meaning
1	HS R	High-voltage measurement signal from right ignition coil
2	HS L	High-voltage measurement signal from left ignition coil
3	STROM	Ignition current setpoint for left and right ignition output stage
4	ZZP L (IP L)	Trigger signal for the left ignition output stage

GE Proprietary Information: CONFIDENTIAL! Use or disclosure of data contained on this sheet is subject to the restrictions on the cover or on the first page.

PIN	Designation	Meaning
5	CODE 4	Third bit of **SAFI** code for position sensing
6	CODE 1	First bit of **SAFI**code for position sensing
7	CODE 2	Second bit of **SAFI** code for position sensing
8	CAN low	CAN low
9	CAN high	CAN high
10	SC	Emergency shutdown
11	CAM	Signal from the camshaft pickup
12	GND	Ground
13	+24 V	Power supply for **SAFI**
14	PI R	Trigger signal for the right port injection driver output stage
15	PCI R	Trigger signal for the right prechamber gas valve driver output stage
16	ZZP R (IP R)	Trigger signal for the right ignition output stage
17	RM1	Feedback from the left ignition output stage
18	PCI L	Trigger signal for the left prechamber gas valve driver output stage
19	CODE 8	Fourth bit of **SAFI** code for position sensing
20	RM2	Feedback from the right ignition output stage
21	CAN-GND	CAN-GND
22	PI RM R	Feedback for the right port injection and prechamber gas valve driver output stage
23	TRIGGER	Signal from ring gear
24	PI RM L	Feedback for the left port injection and prechamber gas valve driver output stage
25	PI L	Trigger signal for the left port injection driver output stage

Exhaust gas thermocouples, knock sensors and cylinder pressure sensors

On the SAFI 2 the exhaust gas thermocouples, knock sensors and cylinder pressure sensors are connected directly inside the housing. To do this, undo the 5 connection screws and remove the cover to reveal the connector.

To connect the sensors, remove the 12-pole connector block from the socket with pointed pliers. Push the connector, with the sensors connected to it, into the socket and fit the strain reliever. Make sure that the gasket is correctly fitted to ensure the sealing effect.

GE Proprietary Information: CONFIDENTIAL! Use or disclosure of data contained on this sheet is subject to the restrictions on the cover or on the first page.

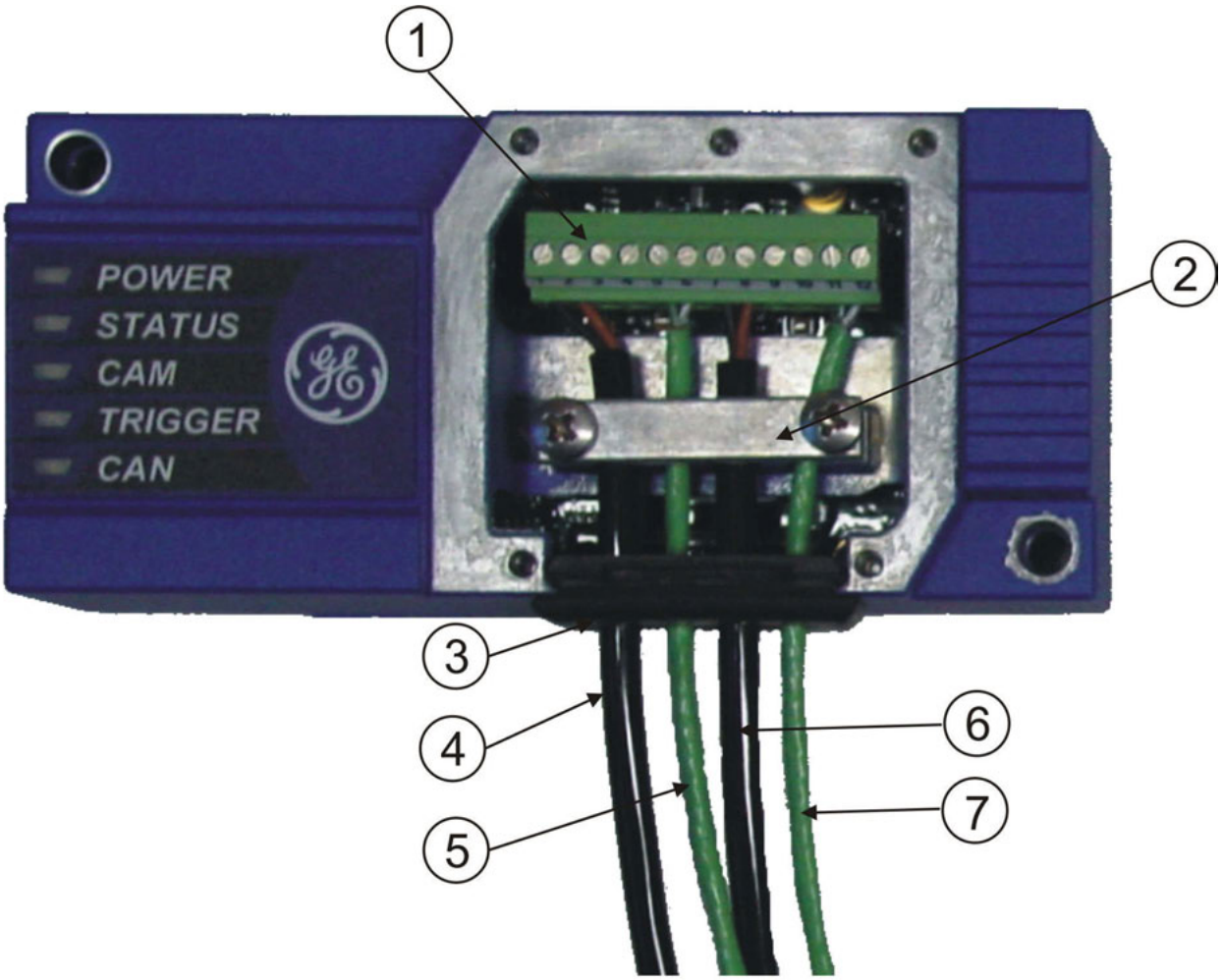

①	Connector block for the sensors	⑤	Left cylinder exhaust gas thermocouple
②	Strain reliever	⑥	Right cylinder knock sensor
③	Gasket	⑦	Right cylinder exhaust gas thermocouple
④	Left cylinder knock sensor		

On the SAFI 2 with the KLS function (part number 652092), connect the knock sensors, and on the SAFI 2 with the DMR function (part number 652439), connect the connection cable for the pressure sensors.

Terminal designation for the SAFI 2 with the KLS function

PIN	Designation	Colour	Meaning
1	Piezo / Pressure L+	Black	+ input to left cylinder knock sensor
2	Piezo / Pressure L -	Brown	- input to left cylinder knock sensor
3	+24V L		not used

GE Proprietary Information: CONFIDENTIAL! Use or disclosure of data contained on this sheet is subject to the restrictions on the cover or on the first page.

PIN	Designation	Colour	Meaning
4	GND		not used
5	TC L+	Green	+ input to left cylinder exhaust gas thermocouple
6	TC L-	White	- input to left cylinder exhaust gas thermocouple
7	Piezo / Pressure L+	Black	+ input to right cylinder knock sensor
8	Piezo / Pressure L -	Brown	- input to right cylinder knock sensor
9	+24V L		not used
10	GND		not used
11	TC L+	Green	+ input to right cylinder exhaust gas thermocouple
12	TC L-	White	- input to right cylinder exhaust gas thermocouple

Terminal designation for the SAFI 2 with DMR function

PIN	Designation	Colour	Meaning
1	Piezo / Pressure L+	Blue	+ input to left cylinder pressure sensor
2	Piezo / Pressure L -	Black	- input to left cylinder pressure sensor
3	+24V L	White	24 V power supply to left cylinder pressure sensor
4	GND	-	not used
5	TC L+	Green	+ input to left cylinder exhaust gas thermocouple
6	TC L-	White	- input to left cylinder exhaust gas thermocouple
7	Piezo / Pressure L+	Blue	+ input to right cylinder pressure sensor
8	Piezo / Pressure L -	Black	- input to right cylinder pressure sensor
9	+24V L	White	24 V power supply to right cylinder pressure sensor
10	GND	-	not used
11	TC L+	Green	+ input to right cylinder exhaust gas thermocouple
12	TC L-	White	- input to right cylinder exhaust gas thermocouple

3.8.2 Displays on the device

The device has five LED displays, of which the "STATUS" LED is in three colours.

Description	Colour	Meaning
POWER	Green	Power supply
STATUS	Green	Ignition or ignition self-test
	Red	Error
	Yellow	Booting up
CAM	Yellow	Synthetic camshaft/reset pulse
TRIGGER	Yellow	Trigger pulse
CAN	Yellow	CAN bus activity

GE Proprietary Information: CONFIDENTIAL! Use or disclosure of data contained on this sheet is subject to the restrictions on the cover or on the first page.

4 Components

The first-generation **SAFI** is supplied with one M6 x 30 and M6 x 35 hexagonal socket head screw and one gasket.

The SAFI 2 is supplied with two M6 x 35 hexagonal socket head screws and one gasket.

The bolts must be tightened to 3.4 Nm.

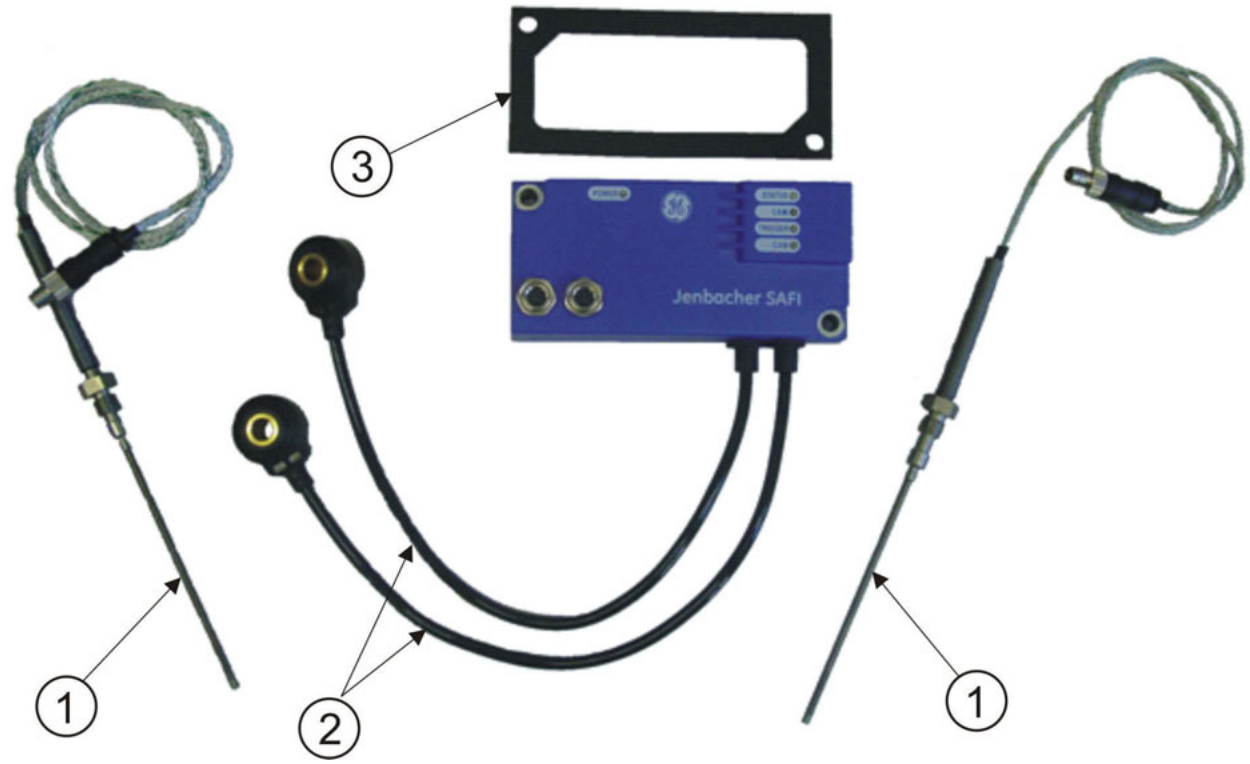

①	Exhaust gas thermocouples	③	Gasket
②	Knock sensors		

4.1 Installation of the sensors

4.1.1 Knock sensors

Each of the two knock sensors is fastened by a mounting bolt (M8x25) to the adapter nut on the rear cylinder head bolts of the neighbouring cylinder heads, without crossing cables, using a tightening torque of 20 Nm. Ensure that the surface is even and clean. Filler rings are not permitted. Tighten the adapter nuts to the cylinder head bolts using a 60 Nm tightening torque.

4.1.2 Thermocouples

Tighten the thermocouple sleeves to a torque of 30 Nm. The exhaust gas thermocouples on the first-generation **SAFI** must be tightened by hand to the engine block to a torque of 15 Nm. Connect the thermocouple for the left cylinder to the left-hand connector and the thermocouple for the right cylinder to the right-hand connector.

GE Proprietary Information: CONFIDENTIAL! Use or disclosure of data contained on this sheet is subject to the restrictions on the cover or on the first page.

The exhaust gas thermocouples on the SAFI 2 must be connected to the connector block and tightened on the engine block to a torque of 15 Nm.

4.2 Identifying the cylinder arrangement in the engine

The **SAFIs** boot up when the power supply is connected. During the boot-up, the **SAFI** detects the installation position on the engine by means of a code in the **MORIS** bus. This is displayed visually by the number of times the CAN LED flashes as shown in the table below. The STATUS LED flashes orange.

SAFI installed between	LED CAN flashes
cylinders 1 and 2	once
cylinders 3 and 4	twice
cylinders 5 and 6	3 times
cylinders 7 and 18	4 times
cylinders 9 and 10	5 times
cylinders 11 and 12	6 times
cylinders 13 and 14	7 times
cylinders 15 and 16	8 times
cylinders 17 and 18	9 times
cylinders 19 and 20	10 times
cylinders 21 and 22	11 times
cylinders 23 and 24	12 times

If a position is duplicated in the event of an engine fault, the incorrect position will be highlighted on the **DIA.NE** system by the message "**SAFI** CAN communication error". The duplicate must be found by checking all the positions by connecting and disconnecting each individual device.

If the code does not match the above-mentioned engine positions or if a firmware problem arises, on the first-generation **SAFI** the CAM and TRIGGER LEDs will flash alternately after the boot-up, and on SAFI 2 the STATUS LED will light up red.

5 Pickup signals

SAFI requires two digital signals to detect the engine running conditions. The three analogue pickup signals are converted to two digital signals by the **SPA24**.

The settings for the pickup signals are documented in TI 1502-0072 – **SPA24**.

5.1 Camshafts/reset signal

The camshafts/reset signal is a synthetic signal generated by the **SPA24** from the signal from the camshaft pickup and the reset signal from the crankshaft.

GE Proprietary Information: CONFIDENTIAL! Use or disclosure of data contained on this sheet is subject to the restrictions on the cover or on the first page.

A significant factor for calculating the crankshaft position is the negative edge of this digital signal, which matches the crossover of the analogue reset signal. The position of this edge is set relative to the top dead centre of the first cylinder in the parameter manager and, as is usual in ignition systems, positive values indicate the range before the top dead centre and negative values the range after the top dead centre of the cylinder.

The negative edge of the input is visualised by the CAM LED on **SAFI** lighting up briefly.

5.1.1 Adjusting the reset position

GE Jenbacher engines normally have a reset position in the range 45 – 95°CA before the top dead centre. The exact position of this signal must be communicated to **SAFI** via the parameter reset position in the **SAFI** parameter list. The possible adjustment range is from -360°CA to 360°CA.

When the engine is started for the first time or conversions are made that alter the position of the reset pickup, an ignition timing strobe must be used to compare the ignition point on the engine with the ignition point value on the engine control system. If the value displayed does not match the actual value on the flywheel, the engine must be shut down, the value for the reset signal corrected and the ignition point rechecked.

⚠ The engine must not be switched to operation under load until the ignition point has been checked!

5.2 Flywheel signal (trigger signal)

SAFIs require between 50 and 500 impulses per rotation (trigger signal) to be able to calculate the speed and the exact angle position of the cylinders.

The positive edge of the input is visualised by the TRIGGER LED on **SAFI** lighting up briefly.

6 Firmware

SAFI is operated using firmware version 7.xx. Firmware versions with the same figure before the decimal point are compatible, allowing an engine to be operated with different firmware versions of **SAFI**.

The firmware version range from 7.00 to 7.40 is reserved for the first-generation SAFI, while the range from 7.40 to 7.99 is reserved for SAFI 2.

The numerals before the decimal point indicate the functional scope, the numerals after the decimal point indicate the firmware version.

Higher numerals after the decimal point indicate improved versions without any increase in functionality.

If the code does not match the above-mentioned engine positions or if a firmware problem arises, on the first-generation SAFI the CAM and TRIGGER LEDs will flash alternately after the boot-up, and on SAFI 2 the STATUS LED will light up red.

If firmware problems arise, download the firmware again or replace **SAFI**.

6.1 Firmware update

You can update the firmware via **DIANE**XT. The need for a firmware update and the exact procedure must be discussed with the Competence Centre in Jenbach.

GE Proprietary Information: CONFIDENTIAL! Use or disclosure of data contained on this sheet is subject to the restrictions on the cover or on the first page.

7 Implementation in the engine control system

Depending on the function, many shutdowns and warnings are assigned an operating notification containing information on the cylinder or **SAFI**. Once a shutdown has occurred or a warning has appeared, the assigned operating notifications are entered one after the other in time intervals of a few seconds.

Only the operating notification from the last cylinder is listed in the current alarm management system. The operating notifications from all the cylinders can be viewed in the alarm history.

7.1 Parameter manager

SAFI affects the following parameter lists.

GE Proprietary Information: CONFIDENTIAL! Use or disclosure of data contained on this sheet is subject to the restrictions on the cover or on the first page.

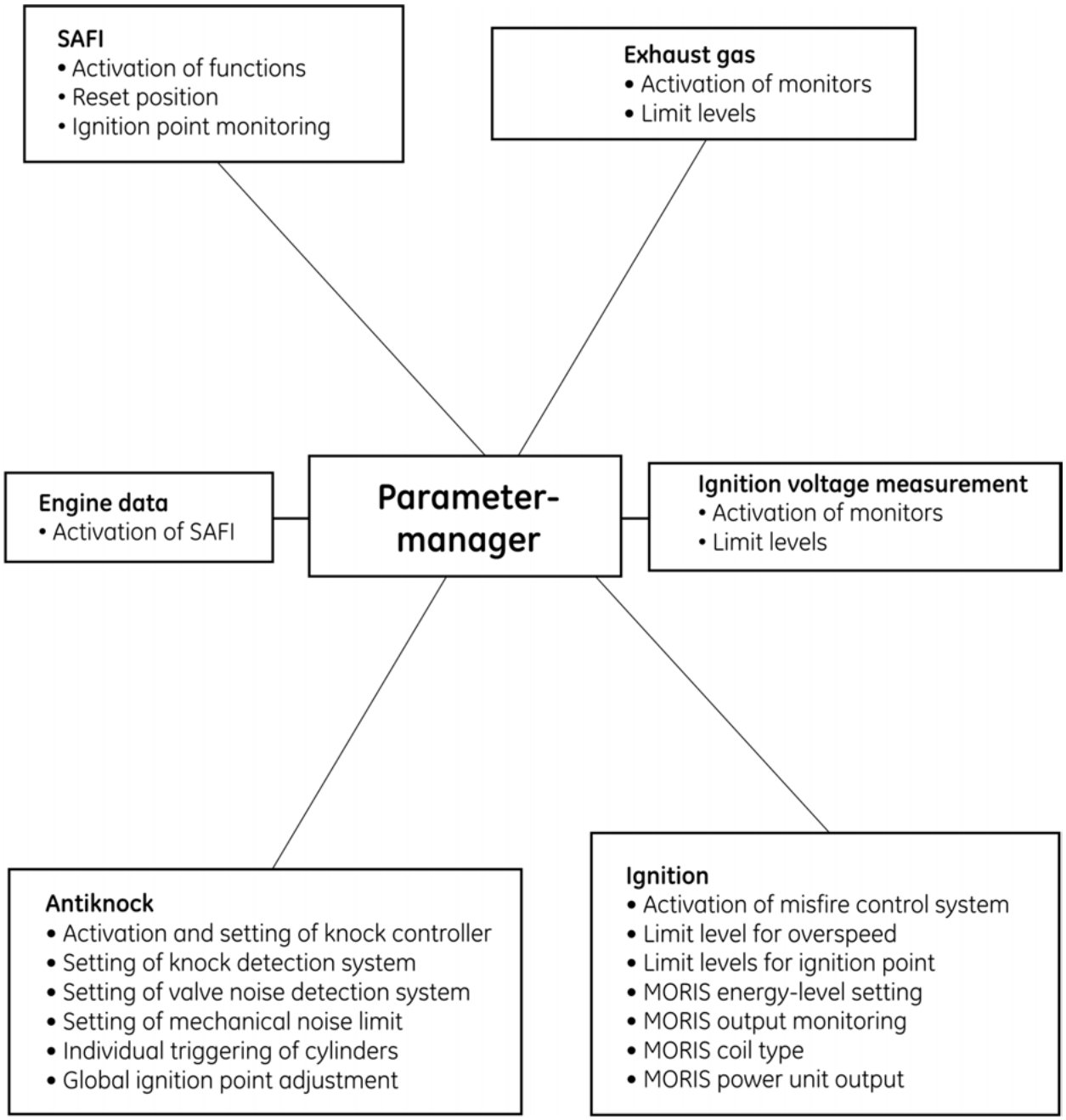

7.2 Alarm accompanying values

In all cylinder-specific error messages and warnings the cylinders concerned are displayed in an additional operating notification, which are designated as an alarm accompanying value.

The current alarm list displays the error message or warning and, in addition, an operating notification. In the historic alarm list, all the cylinders concerned are each displayed in their own operating notification. In the DIA.NE XT

GE Proprietary Information: CONFIDENTIAL! Use or disclosure of data contained on this sheet is subject to the restrictions on the cover or on the first page.

system the cylinder number appears next to the operating notification and in the DIA.NE WIN system the cylinder number is displayed by double-clicking the relevant operating notification.

8 General function

8.1 Description of general functions

Any functionalities which are required to operate and monitor **SAFIs**, irrespective of the assigned task, are described as general functions.

8.1.1 Pickup monitoring

SAFI generates the current position of the crankshaft and camshaft from the pickup signals with an accuracy of 0.1°CA. In order to avoid incorrect positions being detected by incorrect pickup signals, these signals are monitored

- for the presence of the trigger and the synthetic camshaft/reset signal
- to count the number of teeth between two synthetic camshafts/reset pulses
- to ascertain the time from one tooth to the next in order to detect missing teeth and interference signals.

To make troubleshooting easier when a pickup error occurs, the number of teeth detected between the last synthetic camshafts/reset pulse and the defective pickup pulse is displayed on the System – System data – **SAFI** screen. Ensure that the value displayed relates to the crankshaft, which rotates twice per engine cycle.

You can find the defective tooth by counting the teeth on the ring gear, starting with the reset.

Interference pulses from the ignition system can also cause the false detection of pickup signals as a result of faults in the high-voltage circuit. The crankshaft angle position relative to the dead centre of the first cylinder can be calculated using the formula below and the firing order of the engine concerned.

$$\left(\text{Number of teeth on failure} \times \frac{360^\circ\ \text{CA}}{\text{number of teeth on engine}} - \text{Reset Position}\right)$$

8.1.2 Hardware monitoring

If the attached hardware does not support the selected function or the device has an internal malfunction, this error will be displayed.

8.1.3 CAN communication

All **SAFIs** must be communicating with the control system before the engine is started. Failure of CAN communication will generate an alarm message after 25 seconds and the engine will be shut down.

SAFI monitors the signals on the CAN bus. The warning "High CAN error rate" is available to identify CAN bus problems at an early stage. This message indicates an above-average number of defective protocols on the CAN bus.

GE Proprietary Information: CONFIDENTIAL! Use or disclosure of data contained on this sheet is subject to the restrictions on the cover or on the first page.

Although SAFI detects defective protocols, the cause of these defective protocols may also rest with other participants!

8.1.4 Software monitoring

The current software status of the individual devices is displayed on the System – System data – **SAFI** screen.

An alarm message is generated if the software on at least one **SAFI** is not compatible with the software in the engine control system.

If **SAFIs** are connected to an engine with a different software version, this is indicated by a warning. Although different but compatible software versions can be run together on the engine, we recommend that you update to the same software version. Consult GE Jenbacher to decide which software is to be updated.

8.1.5 Monitoring the temperature of the electronics

SAFI measures the internal temperature of the electronics which may exceed the temperature of the housing by up to 10 K. If the internal temperature exceeds 95°C, this means that the maximum permissible ambient temperature is exceeded and a warning is generated.

If the maximum ambient temperature is exceeded, this will cause the SAFI to fail during prolonged operation, which is a situation that should therefore be avoided!

The current temperatures of the electronics of all the cylinders are displayed on the System – System data – **SAFI** screen and recorded in a long-term trend.

8.1.6 Parameter monitoring

Irrespective of the functionality set, **SAFI** detects the presence of plausible parameters. A trip alarm is generated if parameters are not plausible or fall outside the value range, or if the parameters have not yet been transmitted.

If parameters on the SAFI parameter list are changed while the engine is running, the new value is not accepted in order to protect the engine. The user is alerted to the fact that the change has not been effected by the **SAFI** warning "Setting parameters during operation prohibited". The new value will not become active until the next engine start-up.

8.2 Parameter setting

8.2.1 Engine data parameter list

SAFI

Use this parameter to activate the **SAFI** option. When you activate it, the **SAFI** parameter list and the System – System data – **SAFI** screen are displayed.

Default value: On

GE Proprietary Information: CONFIDENTIAL! Use or disclosure of data contained on this sheet is subject to the restrictions on the cover or on the first page.

8.2.2 SAFI parameter list

Ignition

Choose the ignition option to activate **SAFI** as an ignition control system combined with an ignition output stage.

Default value: On

Ignition voltage

Choose the ignition voltage measurement option to activate **SAFI** as an ignition voltage measurement system and the **SAFI** ignition voltage parameter list is displayed.

Default value: On

Exhaust gas temperature

Choose the exhaust gas measurement option to activate **SAFI** as an instrument for measuring the exhaust gas temperature.

Default value: On

Knock

Choose this option to activate **SAFI** as a knock detection system. This option requires **SAFI** to be used with knock sensors.

Default value: On

OCA

The OCA function (optical misfiring detection) is not enabled for SAFI.

Default value: OFF

Reset position

Set this parameter on the engine as described in TI 1502-0072 – **SPA24.**

Default value: 50.0 °CA

J624 default value: 48.5 °CA

Check ignition point tolerance

Where this parameter has been activated, SAFI measures the difference in the ignition point between SAFI and the ignition system. As SAFI controls the ignition in its current configuration, this parameter is currently disabled.

Default value: Off

Ignition point tolerance

This parameter indicates the tolerance for the deviation of the ignition point of the ignition system from **SAFI**. As SAFI controls the ignition in its current configuration, this parameter is currently disabled.

Default value: 50.0 °CA

GE Proprietary Information: CONFIDENTIAL! Use or disclosure of data contained on this sheet is subject to the restrictions on the cover or on the first page.

8.3 Displays

The **SAFI** screen in System visualises the system data for all **SAFIs**.

The system data consists of:

- Hardware version

The hardware version contains information on the version (figure before the decimal point) and the type of hardware (figures after the decimal point). The figure before the decimal point is incremented on each redesign. The figure after the decimal point indicates the different SAFI versions equipped with the KLS or DMR functions.

The table below shows the allocation of the figures after the decimal point to the component assembly.

Hardware version	Component assembly
x.064	SAFI with the KLS function and thermocouple sensors
x.192	SAFI with the DMR function and thermocouple sensors
x.080	SAFI with the KLS function, thermocouple sensors and PI control *)
x.208	SAFI with the DMR function, thermocouple sensors and PI control *)

*) PI control is required for the J920 engine

If the parameter setting activates a function that SAFI does not support, the alarm message "SAFI hardware error" is displayed.

- Firmware version
- Operating hours
- Serial number
- Production date
- Temperature of electronics
- Tooth error

To make troubleshooting easier when a pickup error occurs, the number of teeth detected between the last synthetic camshafts/reset pulse and the defective pickup pulse is displayed.

- Filter version

The filter version is the version of the filter implemented in the firmware for the Piezo sensors.

8.4 Trend display

The temperatures of the electronics are recorded in the SAFI long-term trend over 12 months with a resolution of 0.5 h.

GE Proprietary Information: CONFIDENTIAL! Use or disclosure of data contained on this sheet is subject to the restrictions on the cover or on the first page.

8.5 Operating notifications:

Message number	Message	Description
B3270	**SAFI**hardware error at cylinder	Display shows cylinder position of **SAFI** with hardware error
B3271	**SAFI** CAN communication failure at cylinder	Display shows cylinder position of **SAFI** without CAN communication
B3272	**SAFI** wrong software at cylinder	Display shows cylinder position of **SAFI** with incompatible software
B3273	**SAFI** parameter error at cylinder	Display shows cylinder position of **SAFI** with parameter error
B3276	**SAFI** trigger pickup cylinder failure	Anzeige der Zylinderposition des **SAFI** mit Trigger Pickup Ausfall
B3277	**SAFI** camshaft/reset pickup cylinder failure	Display shows cylinder position of **SAFI** with camshaft/reset pickup failure
B3284	**SAFI** software versions not identical	Display shows cylinder position of **SAFI** with different software version. At least two SAFIs are always displayed as the engine control system cannot decide which is the correct one.
B3291	**SAFI** setting parameters during operation prohibited Cylinder	Display shows cylinder position of **SAFI** in which parameter setting is prohibited
B3292	**SAFI** CAN error rate too high at cylinder	Display shows cylinder position of **SAFI** with excessive CAN error rate
B3293	**SAFI** electronics temperature too high at cylinder	Display shows cylinder position of **SAFI** with excessive electronics temperature

8.6 Warnings

Message number	Message	Description/Solution
W3531	**SAFI** CAN error rate too high	The message is displayed when an above-average number of error frames has been recorded on the CAN bus. Error frames are failed communication attempts which must be repeated, thereby increasing the utilisation of the CAN bus.
		As analysis of error rates is not included in each device in the CAN bus circuit, it is possible that the error frames are also being produced by another device. Error frames are caused by electromagnetic disturbances, defective cabling (e.g. cable too long, wrong cable, poor terminators, bypasses) or a faulty device. Detailed information on the CAN bus and troubleshooting can be obtained from TI 1531-0012 "CAN bus on the GE Jenbacher engine".

GE Proprietary Information: CONFIDENTIAL! Use or disclosure of data contained on this sheet is subject to the restrictions on the cover or on the first page.

Message number	Message	Description/Solution
W3533	**SAFI** software versions not identical	The software statuses of the individual **SAFIs** are not identical but they are compatible.
		Updating to identical software statuses is recommended. Consult GE Jenbacher to decide which software is to be updated.
W3535	**SAFI** setting parameters during engine operation prohibited	If parameters on the **SAFI** parameter list are changed while the engine is running, the new value is not accepted in order to protect the engine. This warning alerts the user to the fact that the change has not been effected.
		The engine must be shut down. The changes will take effect the next time the engine is started.
W3539	**SAFI** electronics temperature too high	If the internal temperature exceeds 95°C, this means that the maximum permissible ambient temperature is exceeded and this warning is generated. The internal temperatures of all **SAFI** devices are listed on the **SAFI** – System data screen.
		Where the temperature of the electronics in one **SAFI** is too high, check the area around the **SAFI** for any heat sources (exhaust gas lines, turbocharger, etc. leak) and rectify the cause of the problem. Where electronics temperatures in the engine as a whole are found to be high or excessive, optimise the ventilation system or provide additional ventilation for **SAFI**.

8.7 Error messages

Message number	Message	Description/Solution
A3330	SAFI hardware error	The hardware is either incompatible with the parameters set for the engine control system or defective.
		Compare the parameters on the **SAFI** parameter list with the devices actually installed. If the parameters are OK, replace the device.
A3331	SAFI CAN communication failure	This error message is generated when there has been no communication with one or more **SAFIs** for more than 25 seconds.
		The cause may be a faulty device, faulty CAN bus cabling or a power failure to the **SAFI**. Detailed information on the CAN bus and troubleshooting can be obtained from TI 1531-0012 "CAN bus on the GE Jenbacher engine".
A3332	SAFI wrong software	The software versions in the engine control system and **SAFI** are not compatible.

GE Proprietary Information: CONFIDENTIAL! Use or disclosure of data contained on this sheet is subject to the restrictions on the cover or on the first page.

Message number	Message	Description/Solution
		If the hardware is compatible (see Hardware error), compatibility can be restored by updating the **SAFI** software or the engine control software.
A3333	SAFI parameter error	A parameter error is generated if parameters are not plausible or outside the value range, or if the parameters have not yet been transmitted.
		Check all **SAFI** parameters.
A3336	SAFI trigger pickup failure	A problem with the trigger signal has been detected.
		Adjust the pickups as described in TI 1502-0072 – SPA24. A TRIGGER LED on each **SAFI** and SPA24 flashes when a pickup signal is detected. These displays are helpful for checking whether a signal has failed in the event of an error.
A3337	SAFI camshaft/reset pickup failure	A problem with the synthetic camshaft/reset signal has been detected.
		Adjust the pickups as described in TI 1502-0072 – SPA24. A CAM LED on each **SAFI** and SPA24 flashes when a pickup signal is detected. These displays are helpful for checking whether a signal has failed in the event of an error.

9 KLS function

9.1 Description of the function

The information on knock and valve noise generated by the Piezo sensors is described as the KLS function.

The KLS function is based on the proven principle of the **KLS98** and the parameter names used are the same as for the **KLS98**. However, the limit levels may differ if there is a different frequency response in the input circuit.

The KLS function consists of the windowing of the engine cycle into different measurement ranges in which on the one hand combustion noise is evaluated for knock noise and on the other hand mechanical noise is evaluated for defects in the valve operating mechanism.

9.1.1 Differences from the KLS98

If a higher-quality digital signal processor is used, the valve noise will be higher with SAFI than with the KLS98. This is because **SAFI** has a more linear frequency curve than KLS98 and therefore displays the high frequencies of valve noise. This property is taken into account when determining the limit levels.

At lower frequencies of knock noise the differences are negligible, with the knock noise on **SAFI** corresponding to the knock noise measured on the **KLS98**.

GE Proprietary Information: CONFIDENTIAL! Use or disclosure of data contained on this sheet is subject to the restrictions on the cover or on the first page.

9.2 Parameter setting

9.2.1 General knock parameters

All the parameters have been saved in the **Antiknock –KLS98/SAFI** parameter list.

KLS98 Reset pulse position

This position of the reset pulse is **only used with KLS98**, while the position of the reset pulse in the **SAFI** parameter list is set for **SAFI**.

Default value for type 4 engines: -123 °CA

Default value for type 6 engines: -144 °CA

Angle window at start of knock noise

This parameter indicates the beginning of the combustion analysis relative to the top dead centre of the cylinder concerned.

Default value: 0 °CA

Angle window width of knock noise

This parameter indicates the duration of the combustion analysis starting with the "Angle window at start of knock noise" parameter.

Default value for type 4 engines: 50 °CA

Default value for type 6 engines: 45 °CA

Angle window at start of valve noise

This parameter indicates the beginning of the valve noise analysis relative to the top dead centre of the cylinder concerned.

The parameter must be selected so that there is no overlap with the angle window for the knock noise relative to the combustion cycle.

Default value for type 4 engines: 70 °CA

Default value for type 6 engines: 60 °CA

Angle window width of valve noise

This parameter indicates the duration of the mechanical noise analysis starting with the "Angle window at start of valve noise" parameter.

The parameter must be selected so that there is no overlap with the angle window for the knock noise relative to the combustion cycle.

Default value for type 4 engines: 630 °CA

Default value for type 6 engines: 660 °CA

GE Proprietary Information: CONFIDENTIAL! Use or disclosure of data contained on this sheet is subject to the restrictions on the cover or on the first page.

Angle window at start of mechanical noise

This parameter is provided to split the valve noise into separate systems for monitoring the inlet and exhaust valves. The function is not active.

Default value for type 4 engines: 80 °CA

Default value for type 6 engines: 50 °CA

Angle window width of mechanical noise

This parameter is provided to split the valve noise into separate systems for monitoring the inlet and exhaust valves. The function is not active.

Default value for type 4 engines: 620 °CA

Default value for type 6 engines: 660 °CA

Limit level for measurement signal failure

When the engine is running at half-load or more, all the measured values for valve noise must have exceeded this value, otherwise the measurement signal from **SAFI** will not be recorded correctly.

Default value for type 4 engines: 50 mV

Default value for type 6 engines: 30 mV

Filter function for knocking

This parameter is used to select the digital filter function for the knock signals.

Default value for type 4 engines: 1

Default value for type 6 engines: 4

Limit level for knocking

The parameter indicates the level from which combustion is considered knocking combustion. The engine control system optimises the engine control on thr basis of this limit level, and generates a shutdown if there is danger of damage to the engine.

Default value for type 4 engines: 1,200 mV

Default value for type 6 engines: 500 mV

Limit level for valve noise

The limit level indicates the maximum permissible valve noise during operation. If this limit is exceeded, this means that there is a defect and the engine shuts down.

Default value for type 4 engines: 10,000 mV

Default value for type 6 engines: 8,000 mV

Limit level for mechanical noise

This limit level is provided to split the valve noise. This function is not active

GE Proprietary Information: CONFIDENTIAL! Use or disclosure of data contained on this sheet is subject to the restrictions on the cover or on the first page.

Default value: 8,000 mV

General ignition point adjustment

If general ignition point adjustment is enabled, the entire engine has been set to the same ignition point. The cylinder with the latest ignition point determines the ignition point for the engine as a whole.

Default value: Off

Options for releasing cylinders 1-24

These parameters are used to set the release of each cylinder monitor individually. You can choose from the following settings:

- 0 – Piezo off: The KLS functions are deactivated.
- 1 – Piezo on: The KLS functions are activated.

Default value: 1 up to the number of cylinders on the engine / 0 for cylinders above the number of cylinders.

If the Piezo function is disabled, the knock and valve noise monitor for this cylinder is inactive, although the measured values are displayed!

9.3 Displays

The measured values for combustion noise issued by **SAFI** are displayed on the Engine controller – Antiknock – Knock noise screen and the knock intensities calculated by the engine control system from the measured values are displayed on the Engine controller – Antiknock – Knock intensity screen.

The measured values for mechanical noise generated by **SAFI** are displayed in the Details – Valve noise screen.

9.4 Trend display

In the "knocking intensities" and "knocking intensities at trips" trends, the knocking intensities are recorded in a short-term trend over 1 hour with a resolution of 1 second.

9.5 Operating notification

Message number	Message	Description
B3279	Knock failure at cylinder	Display shows cylinder position of **SAFI** with knocking
B3281	Maximum valve noise at cylinder	Display shows cylinder position of **SAFI** with shutdown due to excessive valve noise
B3282	Knock sensor measurement signal failure at cylinder	Display shows cylinder position of **SAFI** with measurement signal failure

GE Proprietary Information: CONFIDENTIAL! Use or disclosure of data contained on this sheet is subject to the restrictions on the cover or on the first page.

9.6 Warnings

Message number	Message	Description
W3541	Measurement signal failure Knock sensor	Once engine half load has been exceeded, a check is carried out to ascertain whether the measured values for valve noise have exceeded the value parameterised for measurement signal failure. This message is generated if the value is not exceeded within 3 seconds.
		The Piezo sensor has not been installed correctly or the device is defective (e.g. break in sensor cable).

9.7 Error messages

Message number	Message	Description
A3339	Knocking	The engine control system detects a dangerous condition for the engine due to knock noise. Shutdown prevents mechanical damage due to knocking combustion.
		This is a complex shutdown and may be caused by poor mixture composition, auto-ignition, misfires or ignition problems.
A3341	Maximum valve noise	The limit level for valve noise has been exceeded. Usually, this shutdown points to a mechanical problem in the cylinder head (valves, bearings, etc.).
		Inspect the mechanical elements of the cylinder. Check the valve play and adjust as necessary.
A3342	Measurement signal failure Knock sensor	Once engine half load has been exceeded, a check is carried out to ascertain whether the measured values for valve noise have exceeded the value parameterised for measurement signal failure. This message is generated if the value is not exceeded in more than 50% of the installed devices within 3 seconds.
		The Piezo sensor has not been installed correctly or the device is defective (e.g. break in sensor cable).

10 Ignition function

10.1 Description of the function

The ignition functions are enabled when **SAFI** is operated in combination with the **MORIS** ignition system. **SAFI** triggers the ignition, adjusts the ignition sparks in accordance with the set parameters and monitors the electrical ignition process.

A detailed description of the function can be found in TI 1502-0068.

GE Proprietary Information: CONFIDENTIAL! Use or disclosure of data contained on this sheet is subject to the restrictions on the cover or on the first page.

10.2 Parameter setting

10.2.1 Ignition parameters

The following parameters have been saved in the **Ignition** parameter list.

Setting the ignition points

Ignition points are set for different modes of operation independently of the ignition system.

The default values given here depend on the gas composition and application; changes in the ignition point may only be made by authorised personnel or after consultation with GE Jenbacher!

Default values for type 4 engines:

ZZP (IP) without knock monitoring for gas types 1-4:	20 °CA
ZZP (IP) with knock monitoring for gas types 1-4, mains parallel mode:	24 °CA
ZZP (IP) with knock monitoring for gas types 1-4, island mode:	18 °CA
ZZP (IP) minimum gas types 1-4:	14 °CA

Default values for type 6 engines:

ZZP (IP) without knock monitoring for gas types 1-4:	80 °CA
ZZP (IP) with knock monitoring for gas types 1-4, mains parallel mode:	20 °CA
ZZP (IP) with knock monitoring for gas types 1-4, island mode:	18 °CA
ZZP (IP) minimum gas types 1-4:	14 °CA

Earliest possible ignition point

The ignition point is limited to this value. **SAFI** will not accept an earlier ignition point.

Default value for type 4 engines: 27 °CA

Default value for type J612, J616, J620 engines ... 25 °CA

J624 default value: 27 °CA

Latest possible ignition point

The ignition point is limited to this value. **SAFI** will not accept a later ignition point.

Default value: 10 °CA

Overspeed

This parameter sets the speed for the overspeed trip which opens the safety contact and switching off the ignition.

Default value at rated speed of 1200 rpm: 1440 rpm

Default value at rated speed of 1500 rpm: 1800 rpm

GE Proprietary Information: CONFIDENTIAL! Use or disclosure of data contained on this sheet is subject to the restrictions on the cover or on the first page.

Default value at rated speed of 1800 rpm: 2150 rpm

Misfire control

This parameter is used to enable the misfire control system to selectively shut down cylinders if the speed is too high.

Default value for type 4 engines: On

Default value for type 6 engines: Off

10.2.2 MORIS

The following parameters have been saved in the **Ignition – MORIS** parameter list.

Spark duration

You can set the duration of the ignition spark. Prolonging the spark duration has a positive effect on the misfire limit but also means an increased power requirement.

Type 4 engines with a default value of 500 mg/Nm³ NOX: 500 µs

Type 4 engines with a default value of 250 mg/Nm³ NOX: 700 µs

Default value for type 6 engines: 250 µs

Ignition current level

You can specify the maximum ignition current for the ignition spark. The ignition current level scales the set ignition current flow and indicates its maximum value. Increasing the ignition current has a positive effect on the misfire limit but also means an increased power requirement.

Default value: 40 %

Ignition current flow

This parameter is used to adjust the ignition current flows specified in TI 1502-0068 MORIS.

Default value for type 4 engines: 5

Default value for type 6 engines: 1

Coil type

As the electrical characteristics of the ignition coil affect the ignition control system, the set coil type must always match the installed coil type.

Default value: 1

Power unit output

This is the parameter for the total output of the 185 V **MPM** power units. The maximum permissible ignition output is calculated and limited on the basis of this parameter.

Default value for type 4 engines: 462 W

Default value for type 6 engines: 924 W

GE Proprietary Information: CONFIDENTIAL! Use or disclosure of data contained on this sheet is subject to the restrictions on the cover or on the first page.

Minimum triggering level for varying the spark duration

This level indicates the number of tolerable misfires per ten engine cycles, above which a warning is generated. Monitoring is disabled when the parameter is set to 0.

Default value: 3

Spark duration tolerance

The spark duration tolerance indicates the extent to which the measured spark duration can deviate from the set spark duration.

Default value: 80 %

10.3 Displays

You can switch between the ignition point and ignition voltage screens on the Details – Ignition screen and the ignition self-test can be activated when the mode selector switch is in the "Off" position.

10.3.1 Ignition output errors

Ignition output errors are displayed as digital values on the Details – Ignition screen, where a distinction is made between combustion time tolerance and ignition delay in order to improve diagnosis. The displayed value is a relative value which indicates the number of failed ignition attempts per ten ignition events.

10.3.2 Ignition timing point

The ignition points of all the cylinders and the global, minimum, maximum and average ignition point across the engine as a whole are displayed on the Details – Ignition point screen.

10.4 Trend display

No trends are recorded for **MORIS**.

10.5 Operating notification

Message number	Message	Description
B3225	Ignition On	All the cylinders are firing
B3226	Ignition Off	At least one cylinder is not firing
B3294	Ignition power reduction active - cylinders	Display shows cylinder with power reduction
B3278	Ignition output error at cylinder	Display shows cylinder with output error
B3283	Ignition hardware error at cylinder	Display shows cylinder with hardware error

GE Proprietary Information: CONFIDENTIAL! Use or disclosure of data contained on this sheet is subject to the restrictions on the cover or on the first page.

10.6 Warnings

Message number	Message	Description/Solution
W3545	Ignition output errors	This warning is generated when repeated combustion time deviations are measured.
		To carry out a diagnosis, check the "Combustion time tolerance" and "Minimum triggering level for combustion time deviation" parameters. The error rates for combustion time deviations are displayed on the Ignition – Output errors screen.
W3551	Ignition power reduction active	The ignition process had to be aborted before the set combustion time was reached as the power absorbed by the ignition system exceeded the maximum output of the **MPM** power supply.
		If the parameters set are OK, the problem may be caused by an excessive ignition voltage requirement. Check the spark plug air gaps. The coil, ignition module or **SAFI** may have a hardware defect. If the installed **MPM** power unit is unable to provide the required output, install an additional unit.
W3552	Ignition power supply overloaded	The voltage level of the **MPM** power supply falls below 180 V at 185 V nominal for 2 seconds. This overloads the **MPM**, which results in a reduced service life.
		The power unit output parameter for **MORIS** must match the total of the outputs of all the power units. A detailed description of the original error can be found in TI **MPM/MORIS**.

10.7 Error messages

Message number	Message	Description/Solution
A3343	Ignition hardware error	If SAFI does not receive any feedback from MORIS during the build-up of the ignition spark, the ignition attempt is aborted and the engine shut down. Ignition coil-related error rates have been parameterised.
		Check the setting of the ignition coil parameter. Check the hardware components, i.e. SAFI, MORIS, MPM, spark plug or spark plug sleeve. The error rates for hardware errors per ten combustion cycles are displayed on the Ignition – Output errors screen.

GE Proprietary Information: CONFIDENTIAL! Use or disclosure of data contained on this sheet is subject to the restrictions on the cover or on the first page.

Message number	Message	Description/Solution
A3344	Ignition power supply failed	When the engine is running, this error message is displayed immediately after the feedback fails from the **MPM** power supply and the engine is shut down. The **MPM** power supplies are activated during start preparation. The error message is displayed if a successful activation has not been reported within 5 seconds.
		The power unit output parameter for **MORIS** must match the output of the power units. A detailed description of the original error can be found in TI 1502-0068 MPM.
A3345	Ignition fail-safe loop	Each SAFI reports the transmission of ignition signals via a contact. If a SAFI opens the contact while gas valves are open, the gas valves are closed immediately and this error message is displayed. Details of the event that triggered the opening of the SAFI contact are displayed in an additional message if there has been no CAN bus failure or cabling error.
		If no additional message is present, check the wiring, **MORIS** and **SAFI** for a hardware error by replacing the MORIS and SAFI modules to narrow down the fault to a single module.

11 Ignition voltage measurement function

11.1 Description of the function

If ignition coils with an active measurement output are available on the engine, it is possible to measure the **SAFI** ignition voltage and communicate this to the engine control system via the CAN bus.

In doing so, **SAFI** communicates the average value from 10 measurement cycles to the engine control system.

11.2 Displays

You can switch between the ignition point and ignition voltage screens on the Details – Ignition screen.

The ignition voltages of all the cylinders are displayed in bar and digital form on the Ignition – Details screen while the engine is running and during the self-test. In the self-test it is possible to switch between the current and maximum values. The current values are average values from the last ten ignition events and the maximum value is the highest value which has occurred since you switched to the maximum value display.

11.3 Trend display

The measured values are recorded in the "Ignition voltages" long-term trend over 12 months with a resolution of 0.5 h.

GE Proprietary Information: CONFIDENTIAL! Use or disclosure of data contained on this sheet is subject to the restrictions on the cover or on the first page.

11.4 Parameter setting

The following parameters have been saved in the Ignition voltage measurement parameter list.

Monitoring active from

The limit monitor starts when the average ignition voltage exceeds this limit level.

Default value for type 4 engines: 15 kV

Default value for type 6 engines: 12 kV

Monitoring the hysteresis

The limit monitor is deactivated as soon as the voltage falls below the "Monitoring active from" limit level minus this value.

Default value: 2 kV

Minimum ignition voltage monitoring active

Activates the monitor as soon as the voltage falls below the minimum ignition voltage.

Default value: On

Ignition voltage minimum

Indicates the lower limit level when monitoring the minimum ignition voltage.

Default value for type 4 engines: 12 kV

Default value for type J612, J616, J620 engines ... 6 kV

J624 default value: 8 kV

Ignition voltage minimum delay

The voltage must drop below the minimum limit level at least for this period so that a warning can be generated.

Default value: 30 s

Maximum ignition voltage monitor active

Activates monitoring as soon as the voltage exceeds the maximum ignition voltage.

Default value: On

Ignition voltage maximum

Indicates the upper limit level when monitoring the ignition voltage.

Default value for type 4 engines: 33 kV

Default value for type 6 engines: 30 kV

Ignition voltage maximum delay

The voltage must exceed the maximum limit level at least for this period so that a warning can be generated.

GE Proprietary Information: CONFIDENTIAL! Use or disclosure of data contained on this sheet is subject to the restrictions on the cover or on the first page.

Default value: 10 s

Average ignition voltage monitoring active

Activates monitoring as soon as the voltage exceeds the average ignition voltage.

Default value: Off

Maximum average ignition voltage

Indicates the limit level for monitoring as soon as the voltage exceeds the average of all ignition voltages.

Default value: 30 kV

Average ignition voltage maximum delay

The voltage must exceed the maximum permissible average ignition voltage at least for this period so that a warning can be generated.

Default value: 30 s

Ignition voltage differential monitoring active

Activates the voltage differential monitoring from the highest to the lowest ignition voltage value.

Default value: On

J624 default value: Off

Ignition voltage differential

Indicates the limit level for the monitor as soon as the voltage exceeds the maximum ignition voltage differential.

Default value for type 6 engines: 10 kV

Default value for type 4 engines: 6 kV

J624 default value: 6 kV

Ignition voltage difference delay

The voltage must exceed the ignition voltage difference at least for this time so that a warning can be generated.

Default value: 30 s

Trigger voltage

This parameter is used for the MONIC only, is not enabled for **SAFI** and does not affect the function.

Default value: 5 kV

GE Proprietary Information: CONFIDENTIAL! Use or disclosure of data contained on this sheet is subject to the restrictions on the cover or on the first page.

11.5 Operating notification

Message number	Message	Description
B3286	Ignition coil offset error at cylinder	Display shows cylinder position of **SAFI** with offset error
B3287	Ignition voltage too low at cylinder	Display shows cylinder position of **SAFI** with excessively low ignition voltage
B3288	Ignition voltage too high at cylinder	Display shows cylinder position of **SAFI** with excessive ignition voltage
B3289	Average ignition voltage too high at cylinder	Display shows cylinder position of **SAFI** with excessive average ignition voltage
B3290	Ignition voltage difference too high at cylinder	Display shows cylinder position of **SAFI** with excessive ignition voltage difference

11.6 Warnings

Message number	Message	Description/Solution
W3546	Ignition coil offset error	Every MORIS ignition coil produces an offset voltage of 2 V when connected to the power supply. This error message is generated if this offset voltage is not present. The The presence of the offset voltage is checked during every start preparation.
		If this error affects one cylinder, the line connecting the ignition coil and the **SAFI** may be damaged or the measuring device on the ignition coil may be defective. If the fault is present on all cylinders, the ignition coil power supply has failed. To effect a diagnosis, measure the offset voltage on the relevant pin of the **SAFI** connector plug while the engine is at standstill. It can also be measured with **SAFI** disconnected.
W3547	Ignition voltage too low	The ignition voltage is too low, which means the ignition energy is too low, which in turn can cause misfires.
		The air gaps may be too small and must be checked. Check the ignition system by means of a self-test.
W3548	Ignition voltage too high	The ignition voltage is too high, which may result in damage to the high-voltage cables and the ignition coil. The ignition voltage could be so high that no flash-over occurs at the electrode, thereby causing misfires.
		The air gap may be too big and must be checked. An interruption in the high-voltage circuit between the ignition coil and the spark plug may also result in an excessive ignition voltage.

GE Proprietary Information: CONFIDENTIAL! Use or disclosure of data contained on this sheet is subject to the restrictions on the cover or on the first page.

Message number	Message	Description/Solution
W3549	Average ignition voltage too high	The average value of all ignition voltages calculated in the engine control system is too high.
		Check the air gaps of the spark plugs.
W3550	Ignition voltage difference too high	The difference between the cylinders with the highest and lowest ignition voltage is too great.
		Check the air gaps.

11.7 Error messages

The ignition voltage measuring system does not generate trip-producing error messages.

12 Exhaust gas temperature measurement function

12.1 Description of the function

SAFI measures the exhaust gas temperature and transmits the measured values for each cylinder to the engine control system. The engine control system processes, displays and analyses the measured values.

13 Speed measurement function

13.1 Description of the function

SAFI calculates the speed from the ring gear pulses. From this, **DIANE** produces an average value which enters the engine controller as the engine speed. The speed is monitored for the set value in the Ignition parameter list. If the value is exceeded the fail-safe loop is opened, the ignition system disabled and an error message generated.

13.2 Displays

The current engine speed is available on a number of screens. The way the speed is displayed is not affected irrespective of whether the speed is determined by **SAFI** or another measuring device.

13.3 Operating notification

Message number	Message	Description/Solution
B3275	**SAFI**overspeed trip error at cylinder	Display shows cylinder position of **SAFI** with overspeed trip.

13.4 Warnings

The speed measurement system does not generate any warnings.

GE Proprietary Information: CONFIDENTIAL! Use or disclosure of data contained on this sheet is subject to the restrictions on the cover or on the first page.

13.5 Error messages

Message number	Message	Description/Solution
A3335	**SAFI** overspeed trip	The engine speed exceeds the set value. At the same time as it is communicating the message, **SAFI** opens a hardware contact which triggers closure of the gas valves and with it the shutdown of the engine.

GE Proprietary Information: CONFIDENTIAL! Use or disclosure of data contained on this sheet is subject to the restrictions on the cover or on the first page.

1 Description ... 2
1.1 General ... 2
1.2 Basic information ... 3
1.2.1 SPA24 block diagram 3
1.2.2 Input signals 3
1.2.3 Output signals 4
1.3 Displays/indications on the device ... 4
1.4 TRIGGER signal ... 5
1.4.1 Signal generation 5
1.4.2 Engine signal shape 6
1.5 RESET signal ... 7
1.5.1 Signal generation 7
1.5.2 Engine signal shape 8
1.6 CAM/RESET signal ... 9
1.6.1 Signal generation 9
1.6.2 Engine signal shape 10
1.7 Monitoring systems ... 11
1.7.1 Polarity RESET input signal 11
1.7.2 Chronological overlap of TRIGGER and RESET input signals 13
2 Safety information ... 14
3 Technical data ... 15
3.1 Protection class ... 15
3.2 Ambient conditions ... 15
3.3 Mechanical data ... 15
3.3.1 Vibration 15
3.3.2 Dimensions 15
3.3.3 Assembly 15
3.4 Electrical data ... 15
3.4.1 Voltage supply 15
3.4.2 Power consumption 15
3.5 Connections and displays ... 16
3.5.1 Terminal designation 16
3.5.2 Displays on the device 17
4 Installation ... 18
4.1 SPA24 assembly ... 18
4.2 Pickup adjustment at the engine ... 18
4.2.1 CAM camshaft signal 18
4.2.2 Crankshaft RESET signal 18
4.2.3 TRIGGER pickup signal (flywheel) 18
4.2.4 Assembly of the active camshaft pickup 18
4.2.5 Assembly of passive RESET and TRIGGER pickups for the flywheel and reset signals 19
5 Diagnosis and troubleshooting ... 22
5.1 Operating notifications: ... 23
5.2 Error messages ... 23

GE Proprietary Information: CONFIDENTIAL! Use or disclosure of data contained on this sheet is subject to the restrictions on the cover or on the first page.

1 Description

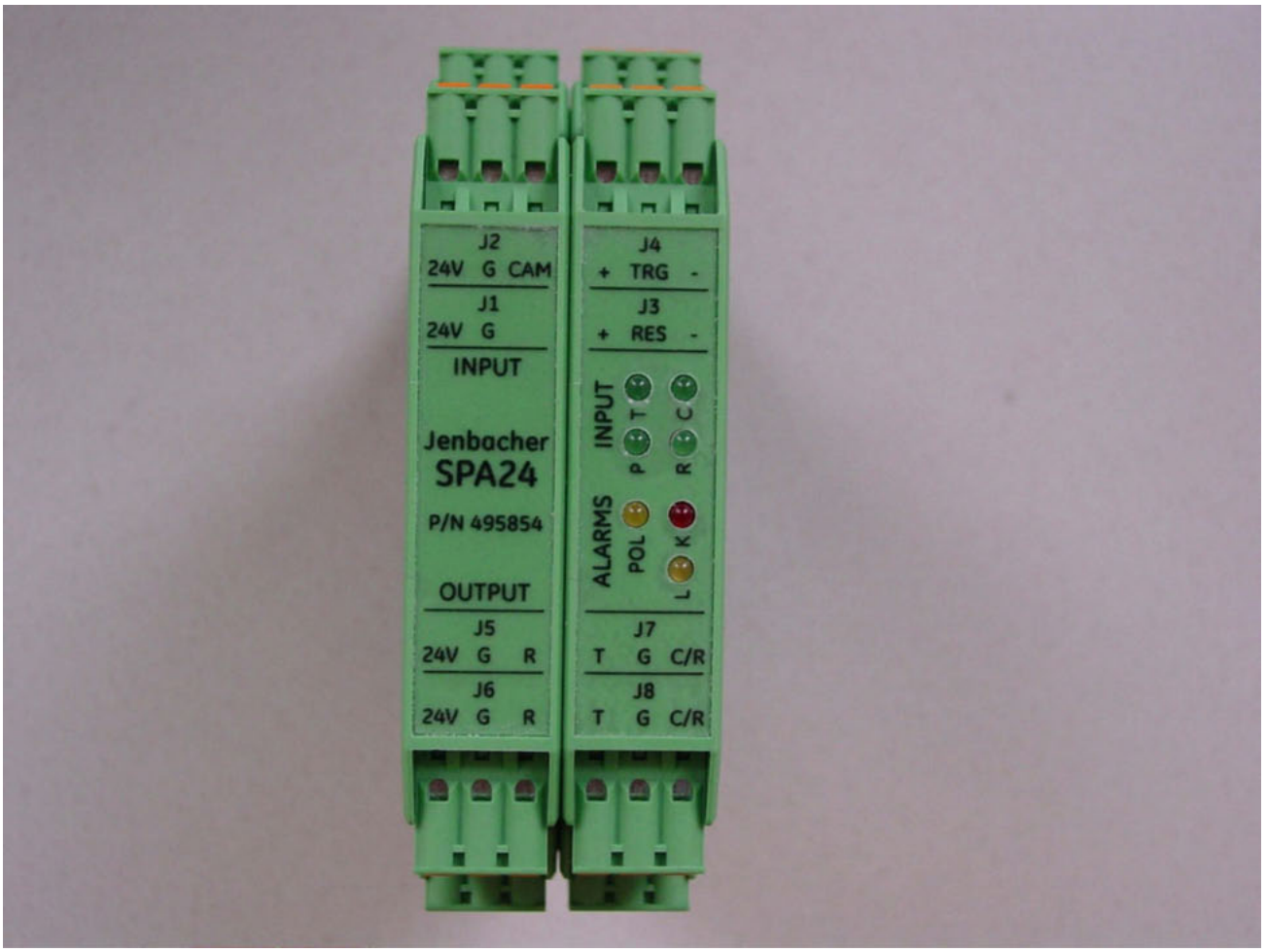

1.1 General

SPA24 stands for **S**AFI-**P**ickup-**A**mplifier with **24** V DC supply voltage.

GE Jenbacher part No.: **495854**

SPA24 is a pickup amplifier with internal logic which generates all three engine pickup signals - camshaft signal (CAM), reset signal (RESET) and ring-gear signal (TRIGGER) - in the digital form required for **SAFI**.

The **SPA24** is supplied with power from the +24 V DC circuit.

The following Technical Instructions are referred to in this document:

- TI 1502-0071 - SAFI (Sensor Actor Functional Interface)
- TI 1502-0068 - MORIS (Modular Rail Ignition System)

The following functionalities are included in **SPA24:**

- internal logical linking of all three analogue engine pickup signals

GE Proprietary Information: CONFIDENTIAL! Use or disclosure of data contained on this sheet is subject to the restrictions on the cover or on the first page.

- providing suitable, accurately timed, amplified, digital output signals for **SAFI** which are accurate to 0.1 crankshaft angle degree
- providing the digital generated **TRIGGER** pickup signal for **SAFI**
- (cylinder banks A and B)
- providing the digital, logically linked **CAM**shaft / RESET pickup signal for **SAFI** (cylinder banks A and B)
- providing the generated **RESET** pickup signal (cylinder banks A and B)
- monitoring the correct polarity of the analogue RESET and TRIGGER pickup input signals
- control voltage output +24V DC (twice).

1.2 Basic information

1.2.1 SPA24 block diagram

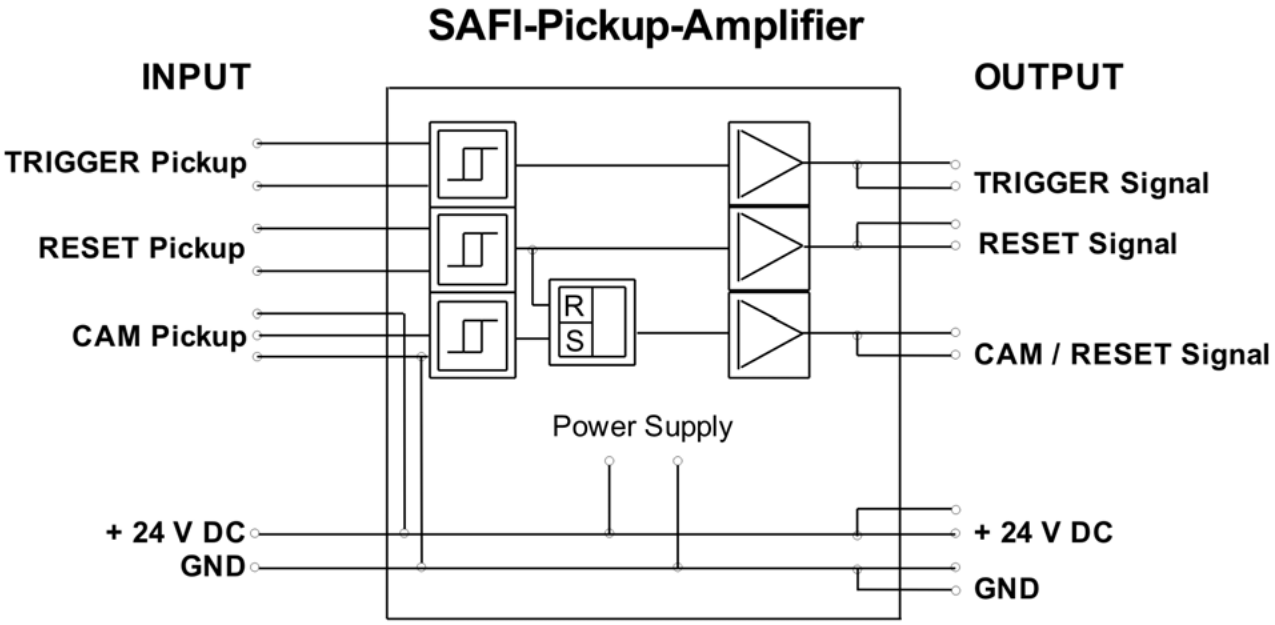

1.2.2 Input signals

The input values are all three engine pickup signals, i.e. **TRIGGER** (ring-gear signal), **RESET** (ring-gear reset signal), **CAM** (camshaft signal), and the +24 V DC supply voltage**.** TRIGGER and RESET are passive pickups without their own + 24V DC voltage supply. CAM is generated by an active pickup which is supplied with + 24 V DC by the **SPA24**. The TRIGGER ring-gear signal has a repetition rate which is equal to the flywheel's number of teeth (in the range of 50 to 500 teeth), the RESET signal repeats itself once every crankshaft rotation and the CAM signal every two crankshaft rotations (flywheel). The CAM signal is generated once every engine cycle, i.e. once every camshaft rotation.

GE Proprietary Information: CONFIDENTIAL! Use or disclosure of data contained on this sheet is subject to the restrictions on the cover or on the first page.

1.2.3 Output signals

The **SPA24** provides accurately timed signal outputs for an engine speed range between 0 and 2500 rpm. The output signal level values are either "0 V" or "+14 V" DC, depending on the operational condition. The **SPA24** amplifies the pickup input signals and produces suitable digital output signals. The output consists of a **logically-linked digital CAM/RESET output signal** which is generated from CAM and RESET input - and the generated **digital TRIGGER output signal**. The digital RESET output signal is provided for monitoring purposes. The generation of the digital output signals will be explained in more detail in sections 1.4 to 1.6. The duplicated +24V DC voltage outputs can be used to supply the electronics to be controlled (e.g. SAFI). The output signals are duplicated.

The release of the digital **SPA24** output signals is defined with an engine speed of >50 rpm^{-1} and a pickup input signal of > ±3 V. The engine speed of 50 rpm is detected by the **SPA24** by independently and internally measuring the input frequencies of the RESET and TRIGGER signal. If two input signal pulses are chronologically too far apart, the output signals are not released if the 50 rpm limit value is underrun. This results in a more accurate signal analysis. If both conditions for the RESET or TRIGGER signal have not been met, the output concerned is set to a 0V DC output level and optically indicated using orange LED "L" (e.g. when engine is idling out or at standstill). The LED indication "L" refers to "Low Speed", i.e. the engine speed is too low and underruns the defined digital output signal's release speed of 50 rpm. If the above conditions are met, the output signals generated for engine start and engine operation are available. During engine operation (≥50 rpm^{-1}) LED "L" is deactivated and a check is made to ensure that the pickup distances are set correctly. The ± 3 V switch threshold of the pickup input signals is reached at a pre-defined pickup default setting of ¾ to 1¼ turns at 50 to 90 rpm.

During engine standstill, all **SPA24** digital signal outputs have a 0 V DC signal value. The double +24V DC outputs are continuously active, independently of the digital signal output's release speed monitoring.

1.3 Displays/indications on the device

On the **SPA24**, the operating conditions of the input signals and various controls are indicated using light-emitting diodes (LEDs).

The three green LEDs "T", "C" and "R" indicate that the relevant pickup input signals TRIGGER, CAM and RESET are available. The LEDs always flash at the rising edge of the positive edge of the pickup signal concerned.

The presence of the supply voltage is indicated by a green LED "P".

The red alarm LED "K" lights up when the zero-voltage level crossover of the falling edges of the RESET and TRIGGER input signal are within 20 microseconds of each other (see 1.7.2 – Chronological overlap of TRIGGER and RESET input signals).

The orange "POL" LED indicates the incorrect polarity of the RESET input signal (see 1.7.1 – Polarity RESET input signal).

The orange "L" LED indicates that the **SPA24** output signals are blocked due to an engine speed which is too low (see 1.2.3 – Output signals). Therefore, LED "L" lights up at engine standstill and turns off at engine start-up.

GE Proprietary Information: CONFIDENTIAL! Use or disclosure of data contained on this sheet is subject to the restrictions on the cover or on the first page.

1.4 TRIGGER signal

1.4.1 Signal generation

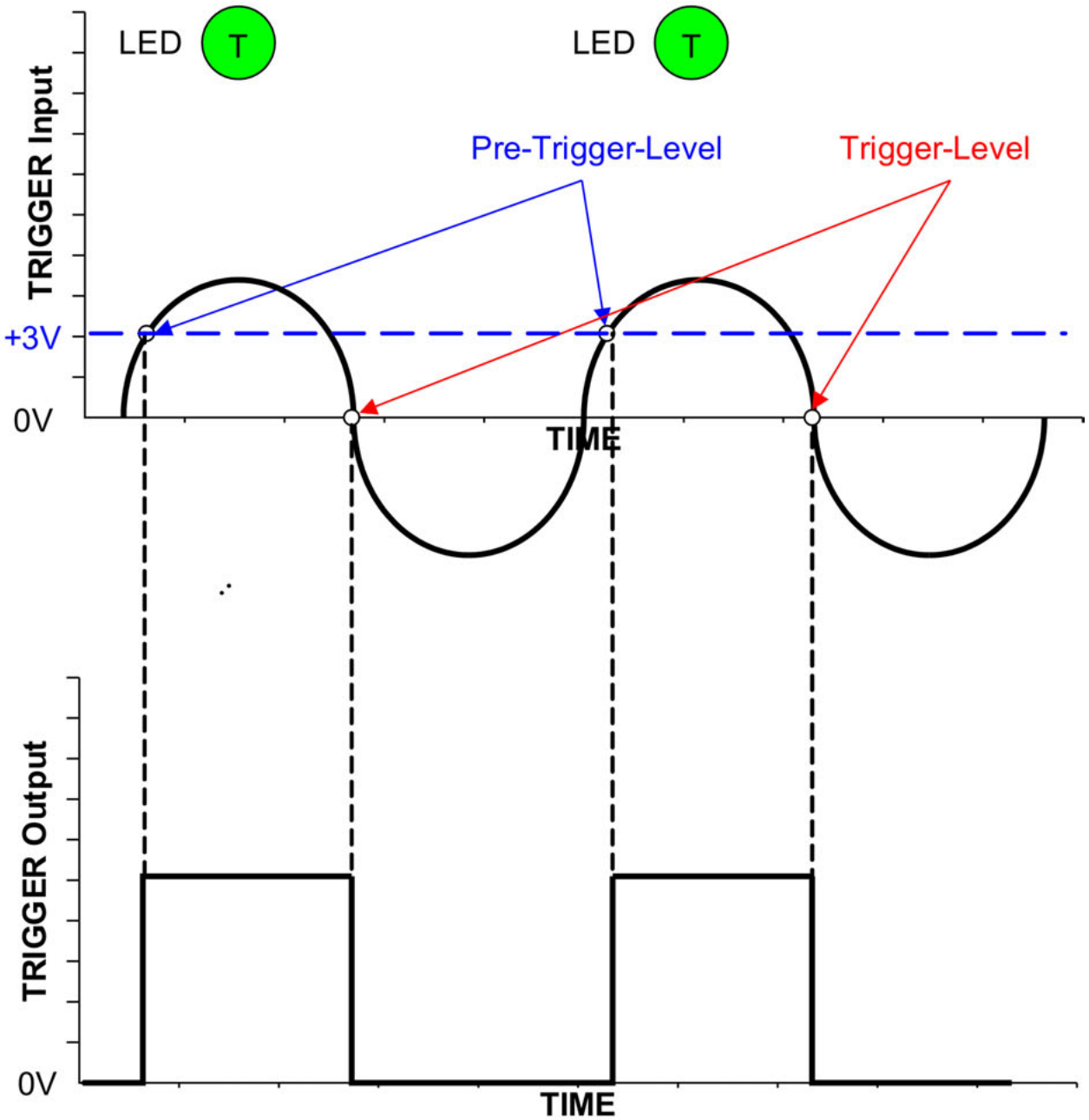

The TRIGGER input signal (ring-gear signal) is generated by a passive pickup.

The TRIGGER input signal is pre-triggered at a +3V signal level to detect the positive, rising edge of the analogue sinus-shaped pickup signal, while at the same time the TRIGGER output signal is activated at the digital +14V High level.

GE Proprietary Information: CONFIDENTIAL! Use or disclosure of data contained on this sheet is subject to the restrictions on the cover or on the first page.

The chronologically later 0V Low signal level (= zero-voltage level crossover) of the same TRIGGER input signal pulse is the trigger point which resets the TRIGGER output signal to the 0V Low signal level.

The "T" LED (= TRIGGER input signal) lights up when the input signal level exceeds the +3V pre-trigger level, and turns off when the +3V pre-trigger level is underrun.

1.4.2 Engine signal shape

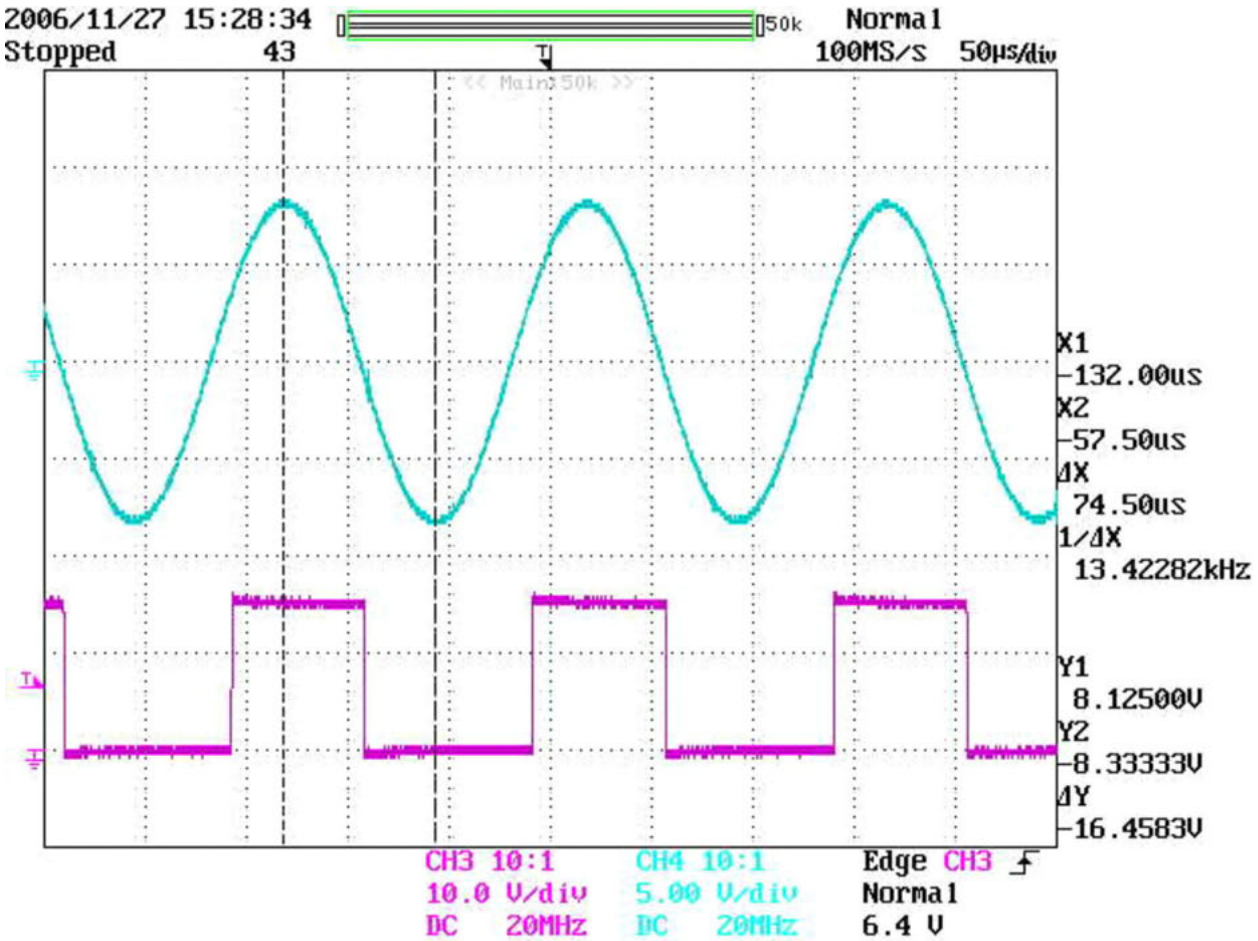

CH4: **SPA24** TRIGGER input signal

CH3: **SPA24** digital TRIGGER output signal for **SAFI**

GE Proprietary Information: CONFIDENTIAL! Use or disclosure of data contained on this sheet is subject to the restrictions on the cover or on the first page.

1.5 RESET signal

1.5.1 Signal generation

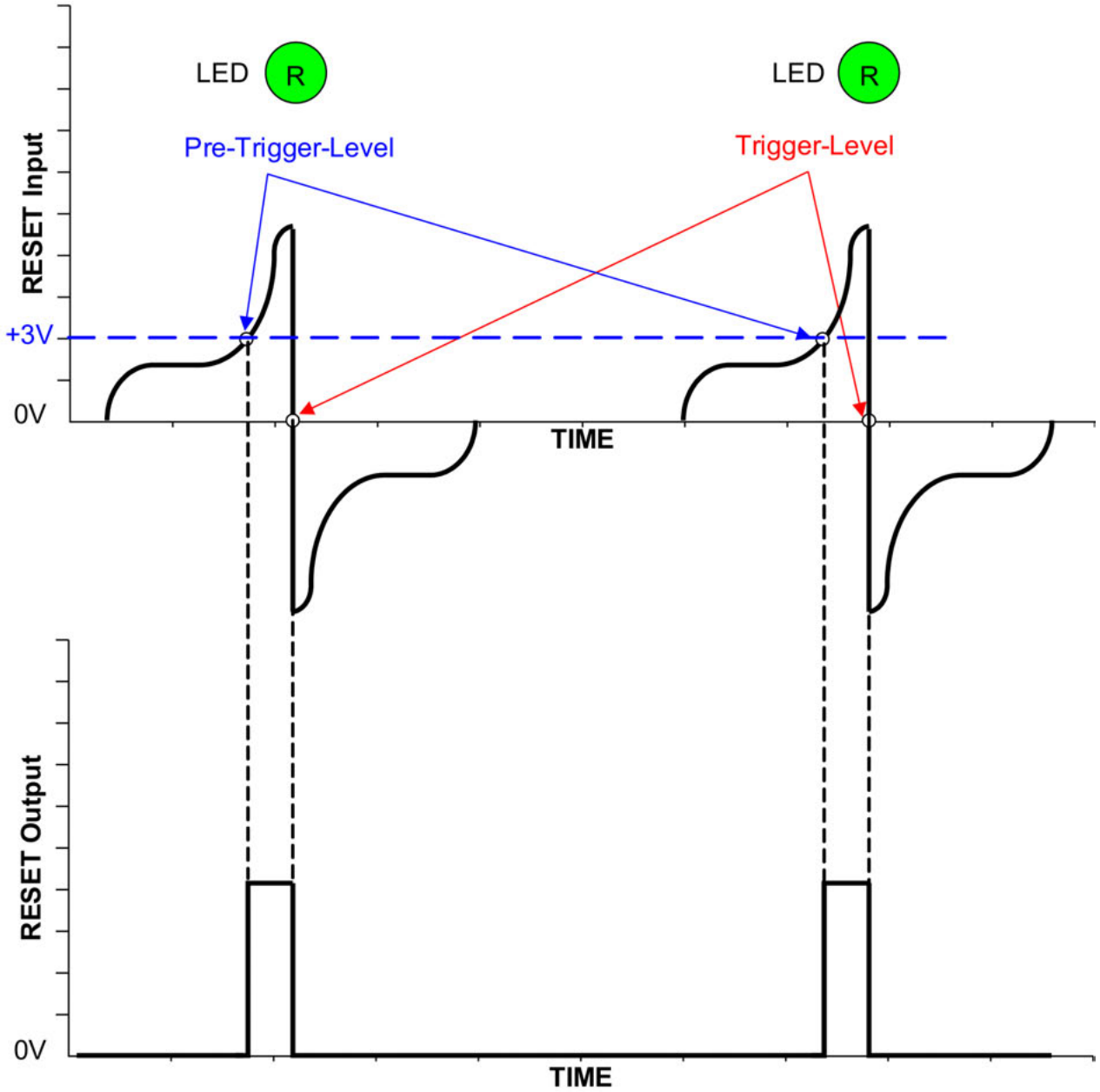

The RESET input signal (= ring-gear reset signal) is generated by a passive pickup.

The RESET input signal is pre-triggered at a +3V signal level to detect the positive, rising edge of the analogue pick-up signal, while at the same time the RESET output signal is activated at the digital +14V High level. The chronologically later 0V Low signal level (= zero-voltage level crossover) of the same RESET input signal pulse is the trigger point which resets the RESET output signal to the 0V Low signal level.

GE Proprietary Information: CONFIDENTIAL! Use or disclosure of data contained on this sheet is subject to the restrictions on the cover or on the first page.

At every engine rotation, the RESET output signal is set to High and subsequently reset to Low.

The "R" LED (= RESET input signal) lights up every engine rotation by a short 25 ms impulse when the input signal level reaches the +3V pre-trigger level.

1.5.2 Engine signal shape

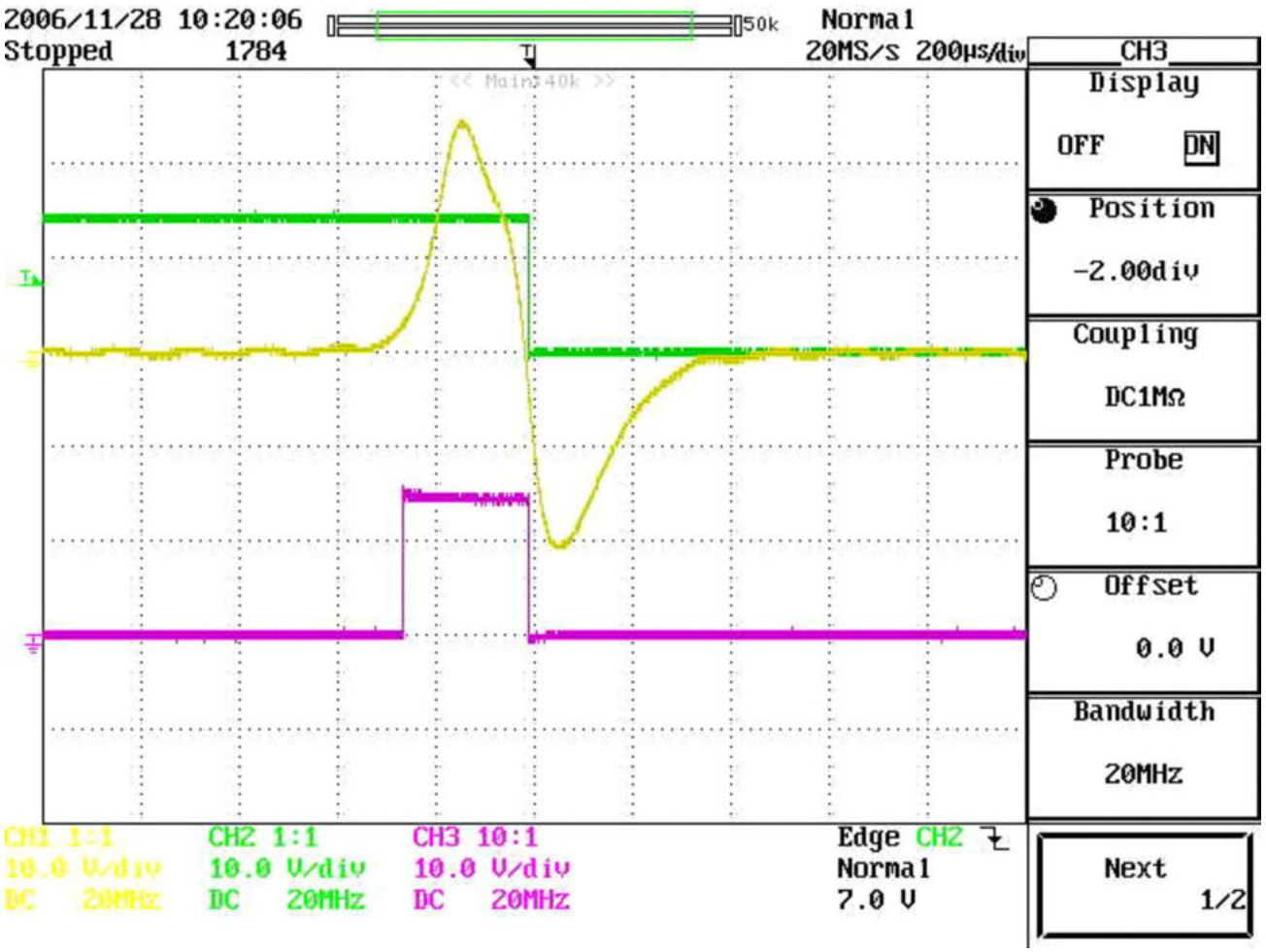

CH1: **SPA24** RESET input signal

CH2: digitally linked **SPA24** CAM/RESET output signal for **SAFI**

CH3: digital **SPA24** RESET output signal

GE Proprietary Information: CONFIDENTIAL! Use or disclosure of data contained on this sheet is subject to the restrictions on the cover or on the first page.

1.6 CAM/RESET signal

1.6.1 Signal generation

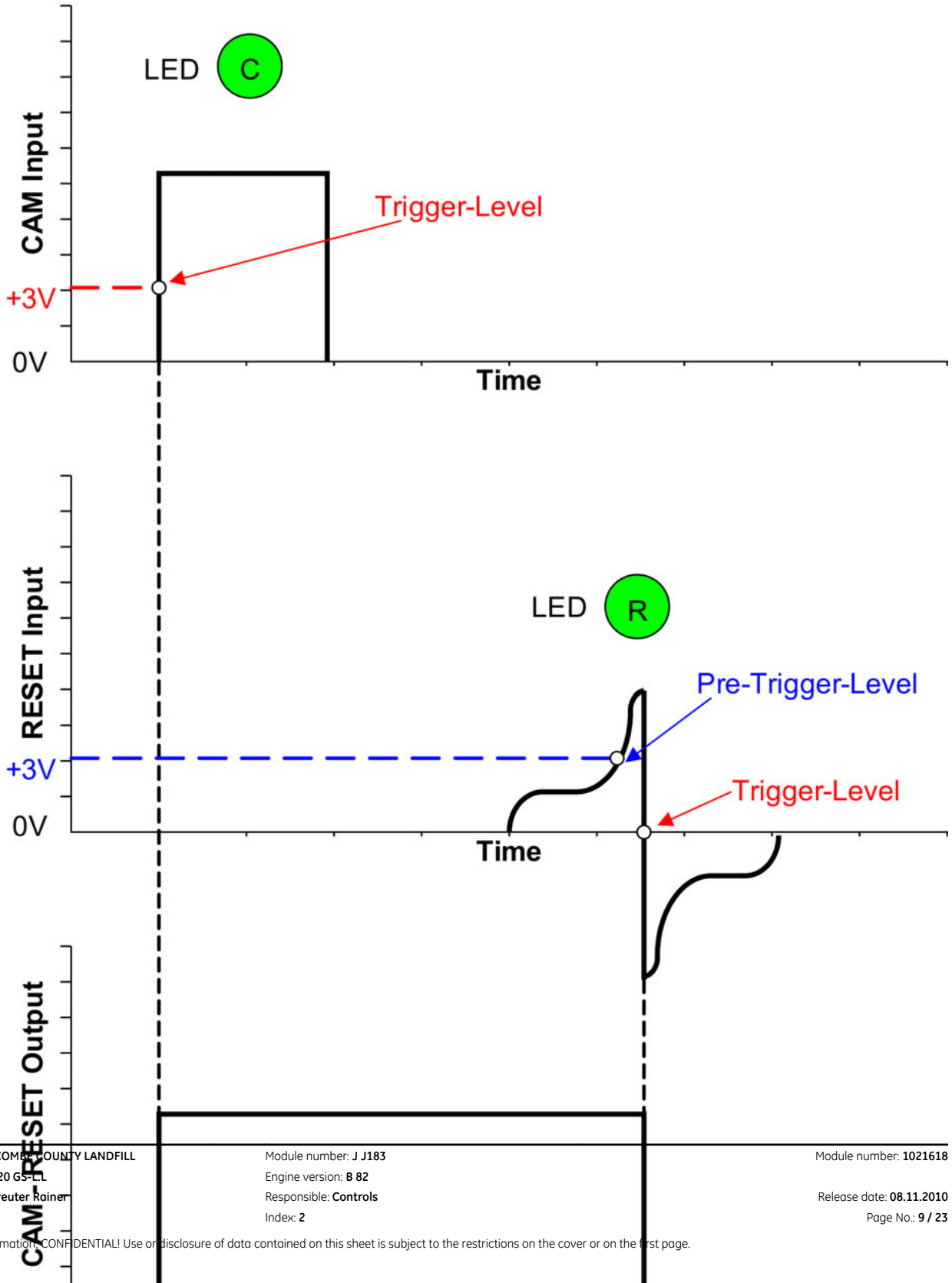

GE Proprietary Information. CONFIDENTIAL! Use or disclosure of data contained on this sheet is subject to the restrictions on the cover or on the first page.

The CAM input signal (= camshaft signal) is generated by an active pickup with a + 24V DC voltage supply.

The RESET input signal (= ring-gear reset signal) is generated by a passive pickup.

The CAM input signal is pre-triggered at a +3V signal level to detect the positive, rising edge of the digital rectangular pickup signal, while at the same time the logically linked CAM/RESET output signal is activated at the digital +14V High level. The next RESET input signal - which is chronologically in the same engine cycle - is also pre-triggered at a +3V signal level to detect the positive, rising edge. The chronologically later zero-voltage level crossover of the RESET input signal pulse is the trigger point which resets the logically linked CAM/RESET output signal to the 0V Low signal level. At every second engine rotation, the logically linked CAM/RESET output signal is therefore set to High and subsequently reset to Low (see 1.2.3 – Output signals / 1.7.1 – Polarity of the RESET input signal).

LED "C" (= CAM input signal) lights up every two engine rotations when the input signal level exceeds the +3V pre-trigger level, and turns off when the +3V pre-trigger level is underrun.

LED "R" (= RESET input signal) lights up every engine rotation by a short 25 ms impulse when the input signal level exceeds the +3V pre-trigger level.

1.6.2 Engine signal shape

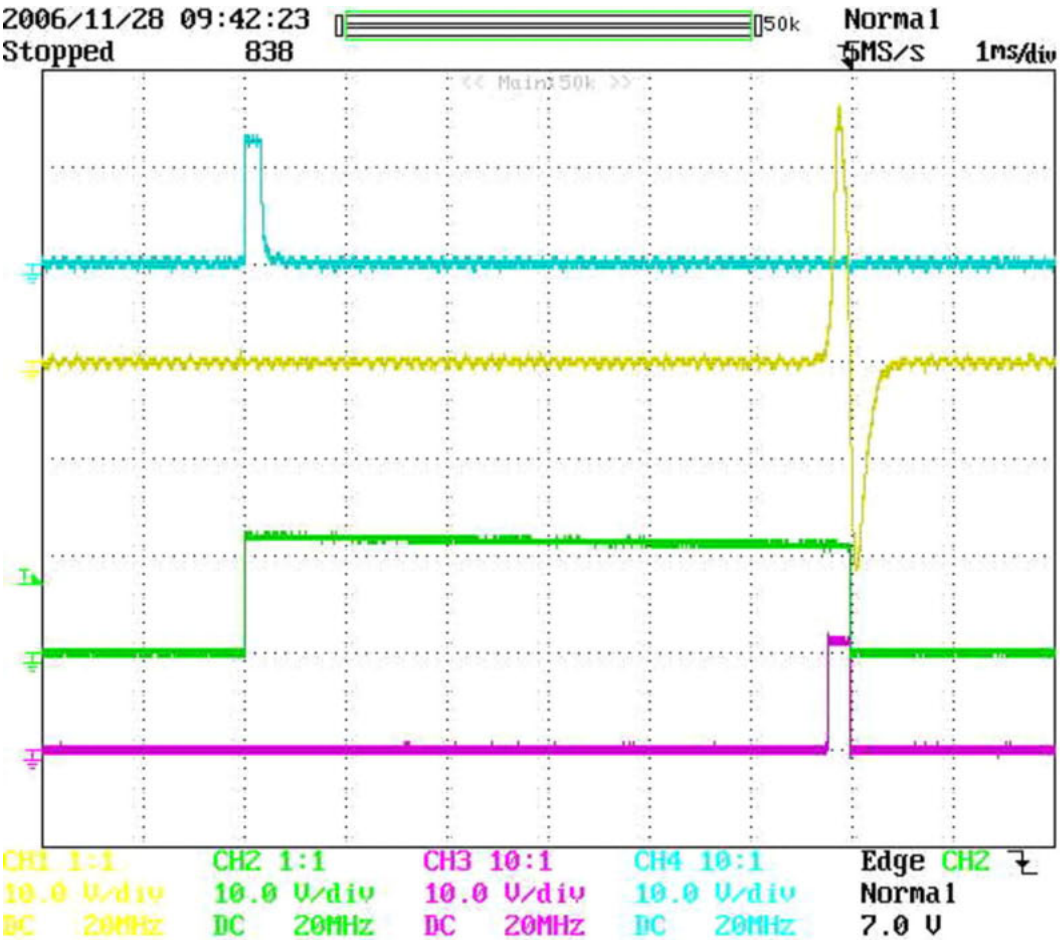

GE Proprietary Information: CONFIDENTIAL! Use or disclosure of data contained on this sheet is subject to the restrictions on the cover or on the first page.

CH4: **SPA24** CAM input signal

CH1: **SPA24** RESET input signal

CH2: digital logic **SPA24** CAM/RESET output signal for **SAFI**

CH3: digital **SPA24** RESET output signal (for control measuring purposes)

1.7 Monitoring systems

1.7.1 Polarity RESET input signal

The RESET input signal (= ring-gear reset signal) is generated by a passive pickup.

An incorrect polarity of the RESET input signal is automatically corrected by the **SPA24**.

The polarity is detected by the **SPA24** by pre-triggering the positive and negative signals. If the polarity is incorrect, the input signal is inverted by the **SPA24** software for further internal processing resulting in a functional correct signal transmission of the logically linked CAM/RESET and RESET output signals. The diagram below shows the internal inversion by the **SPA24** in the case of an incorrectly polarised RESET input signal.

Pole reversal of the RESET input signal at the **SPA24** terminals results in the correct polarity therefore preventing the "POL" LED from lighting up. This condition should be reached after the engine is started up!

The polarity of the RESET pickup signal should be corrected only at engine standstill.

Internal polarity reversal of the RESET signal

GE Proprietary Information: CONFIDENTIAL! Use or disclosure of data contained on this sheet is subject to the restrictions on the cover or on the first page.

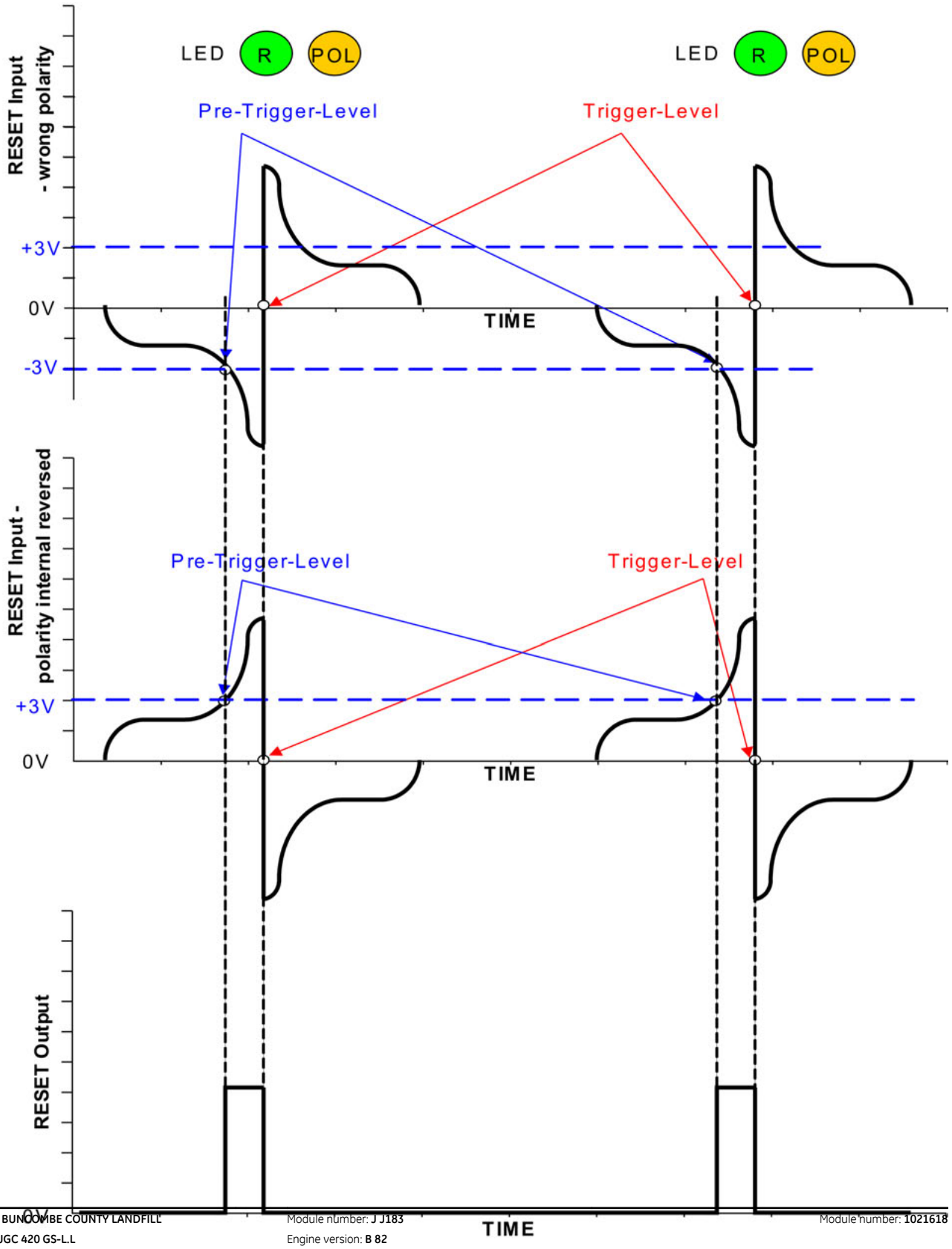

GE Proprietary Information: CONFIDENTIAL! Use or disclosure of data contained on this sheet is subject to the restrictions on the cover or on the first page.

1.7.2 Chronological overlap of TRIGGER and RESET input signals

The TRIGGER input signal (ring-gear signal) and the RESET input signal (= ring-gear reset signal) are generated by a passive pickup.

Under certain unfavourable conditions, the RESET and TRIGGER pickup signals may chronologically overlap at the zero-voltage level crossover. As a consequence, a trouble-free operation of the ignition cannot be guaranteed.

The RESET and TRIGGER input signals are triggered by the chronologically later zero-voltage level crossover "0 V signal level" at the positive falling flank of the relevant signal. If the zero-voltage level crossovers of the RESET and TRIGGER input signals overlap, there is a common trigger time and the RESET and TRIGGER input signals coincide. According to the definition, a trigger point chronologically overlaps whenever the trigger times of both signal and zero-voltage level crossovers fall within a 20 ms timeframe.

The red alarm LED "K" lights up at every ‘trigger point collision’ for 2 seconds and then turns off automatically. Red alarm LED "K" does not light up if the trigger times of both signal and zero-voltage level crossovers fall outside the 20 ms timeframe.

⚠ If this situation arises, the polarity of the TRIGGER signal at the equipment input terminals must be reversed during engine standstill.

GE Proprietary Information: CONFIDENTIAL! Use or disclosure of data contained on this sheet is subject to the restrictions on the cover or on the first page.

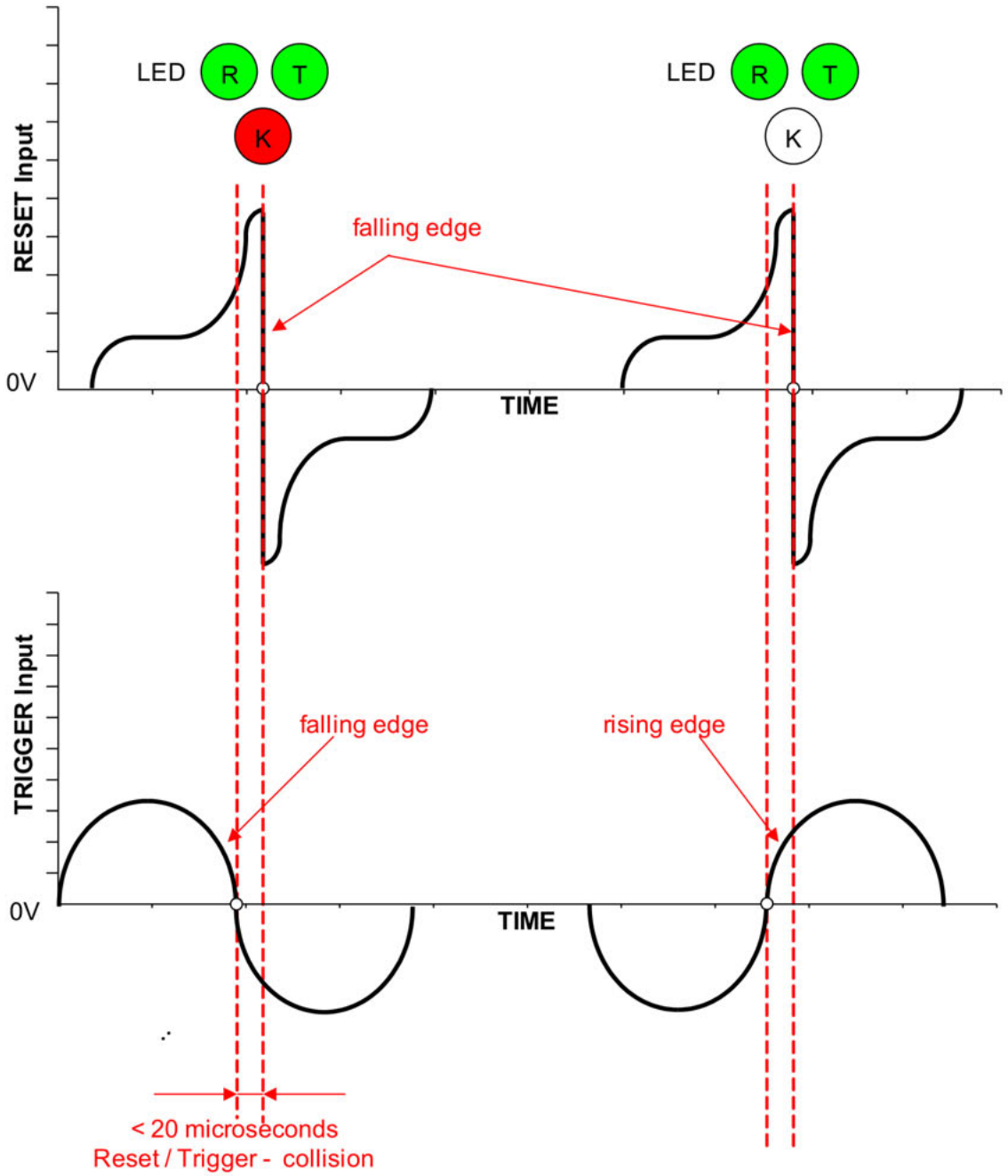

The diagram below illustrates the definition of a 'chronological trigger point overlap' at different TRIGGER input signal polarities.

2 Safety information

Please observe the safety and hazard signs in the safety instructions (TI 2300-0005) and wear the appropriate personal protective equipment.

GE Proprietary Information: CONFIDENTIAL! Use or disclosure of data contained on this sheet is subject to the restrictions on the cover or on the first page.

3 Technical data

3.1 Protection class

When fitted, **SPA24** has protection class IP20.

3.2 Ambient conditions

Temperature limits	Storage	-40 ... + 70 °C
	In operation	-25 ... + 70 °C
Relative humidity	Storage	90 %, no dew
	In operation	85 %, no dew

3.3 Mechanical data

3.3.1 Vibration

SPA24 is installed in the module interface cabinet and assembled vibration-free onto the engine frame using rubber buffers.

3.3.2 Dimensions

Housing: width x height x depth = 35 mm x 100 mm x 115 mm.

3.3.3 Assembly

For reasons of easy access, the **SPA24** housing is assembled into the module interface cabinet using a top-hat rail, type TS 35/15 mm.

3.4 Electrical data

3.4.1 Voltage supply

SPA24 is powered by a battery with a nominal voltage of 24 V DC. The battery voltage may fluctuate in a range from 15 V to 32 V ± 10% residual ripple.

3.4.2 Power consumption

The maximum power consumption of the **SPA24** is approx. 170 mA with maximum 12 **SAFIs** without additional load at both voltage outputs (output connectors J5 and J6) at a +24 V DC supply voltage.

GE Proprietary Information: CONFIDENTIAL! Use or disclosure of data contained on this sheet is subject to the restrictions on the cover or on the first page.

3.5 Connections and displays

3.5.1 Terminal designation

All four 3-fold **input junctions** of the **SPA24** are located on top of the housing and are coded. An incorrect plug connection is therefore not possible.

Input junction	Pin	Description
J1	24V	+ 24 V DC supply voltage for **SPA24**
J1	G	supply voltage, earth
J1		
J2	24V	+ 24V DC supply voltage, camshaft pickup
J2	G	camshaft pickup, earth
J2	CAM	camshaft pickup signal
J3	+ RES	RESET pickup signal
J3		
J3	- RES	RESET pickup signal
J4	+ TRG	TRIGGER pickup signal
J4		
J4	- TRG	TRIGGER pickup signal

All four 3-fold **output junctions** of the **SPA24** are located on the bottom of the housing and are coded to prevent using incorrect plug connections.
The output signals are always duplicated. Plug connections serving functionally equal signals both have a similar coding to facilitate faultfinding when on-site.

Output junction	Pin	Description
J5	24V	+24V DC control voltage output
J5	G	control voltage, earth
J5	R	RESET output signal – cylinder bank A
J6	24V	+24V DC control voltage output
J6	G	control voltage, earth
J6	R	RESET output signal – cylinder bank B
J7	T	TRIGGER output signal – cylinder bank A
J7	G	Weight
J7	C/R	combined CAM/RESET output signal – cylinder bank A
J8	T	TRIGGER output signal – cylinder bank B
J8	G	Weight
J8	C/R	combined CAM/RESET output signal – cylinder bank B

Coding of the connector plugs

GE Proprietary Information: CONFIDENTIAL! Use or disclosure of data contained on this sheet is subject to the restrictions on the cover or on the first page.

Inputs

Input junction	Pin	SPA24 socket coding	Plug coding
J1	24V	No	Yes
J1	G	Yes	No
J1		No	Yes
J2	24V	Yes	No
J2	G	Yes	No
J2	CAM	No	Yes
J3	+ RES	Yes	No
J3		No	Yes
J3	- RES	Yes	No
J4	+ TRG	No	Yes
J4		Yes	No
J4	- TRG	Yes	No

Inputs

Output junction	Pin	SPA24 socket coding	Plug coding
J5	24V	Yes	No
J5	G	No	Yes
J5	R	No	Yes
J6	24V	Yes	No
J6	G	No	Yes
J6	R	No	Yes
J7	T	No	Yes
J7	G	No	Yes
J7	C/R	Yes	No
J8	T	No	Yes
J8	G	No	Yes
J8	C/R	Yes	No

3.5.2 Displays on the device

The device has seven LED to indicate the operating conditions and various monitoring activities.

Description	Colour	Meaning
P	Green	Supply voltage **SPA24**
T	Green	Signal from ring-gear TRIGGER pickup
C	Green	Signal from CAM pickup
R	Green	Signal from crankshaft RESET pickup

GE Proprietary Information: CONFIDENTIAL! Use or disclosure of data contained on this sheet is subject to the restrictions on the cover or on the first page.

Description	Colour	Meaning
POL	Yellow	Incorrect polarity of RESET pickup signal → The RESET signal is automatically inverted internally.
K	Red	If the zero point of the falling edge of the RESET and TRIGGER signal falls within a 20 µs timeframe pole reversal of the TRIGGER signal!
L	Yellow	The **SPA24** does not transmit any signals because the speed has fallen below 50 rpm or the pickup input signal voltage is below 3 V. The LED lights up at engine standstill and turns off at engine start-up! (L stands for Low Speed)

4 Installation

4.1 SPA24 assembly

The **SPA24** is assembled into the module interface cabinet using a TS35/15 mm top-hat rail.

4.2 Pickup adjustment at the engine

4.2.1 CAM camshaft signal

Four-stroke engines require information about the angle of rotation of the camshaft in order to distinguish between the compression stroke and the gas-exchange stroke. As the signal equals the camshaft speed and has a smaller angle speed, an active pickup must be used.

4.2.2 Crankshaft RESET signal

To be able to accurately determine the crankshaft position during the working cycle, a crankshaft reset signal in connection with the camshaft signal is required.

The RESET position is approximated by mechanically measuring the crankshaft angle (CA) position before the top dead centre (BTDC) of the first cylinder.

The exact reset position must be checked following every engine adjustment which may influence the reset position using a strobe light and adjusted in the ignition using the RESET POSITION parameter (see the technical instructions for **SAFI** - TI 1502-0071).

4.2.3 TRIGGER pickup signal (flywheel)

The flywheel requires at least 50 (at most 500) impulses per revolution (TRIGGER signal).

4.2.4 Assembly of the active camshaft pickup

The distance between signal transmitter and pickup must be between 0.75 und 1.25 mm. The M12 x 1 pickup originally supplied by GE Jenbacher must therefore be adjusted to ¾ to 1¼ turns. Despite reduced accuracy, pickups with a 5/8" UNF thread must be set to a gap of ¾ to 1¼ turns.

Default setting: 1 turn = 1 mm

GE Proprietary Information: CONFIDENTIAL! Use or disclosure of data contained on this sheet is subject to the restrictions on the cover or on the first page.

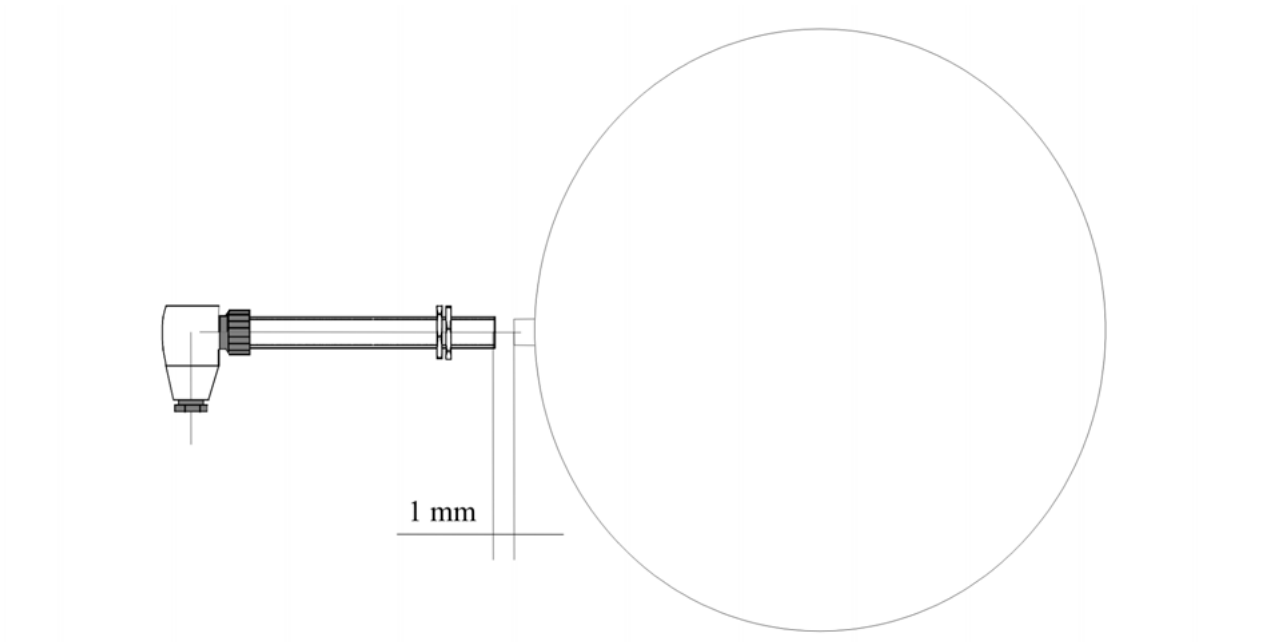

The camshaft signal must occur before the crankshaft reset signal and must be between 110 ° and 200° CA BTDC in the ignition cycle.

When adjusting, ensure that the pickup is reset to the maximum elevation. Especially when using a screw head as trigger source, e.g. in type 6 engines, an incorrect adjustment can lead to mechanical triggering and destruction of the pickup.

4.2.5 Assembly of passive RESET and TRIGGER pickups for the flywheel and reset signals

Magnetic (passive) pickups should be carefully adjusted to a distance between 1.0 and 1.8 mm between the pickup and the tooth or trigger source. Accordingly, a genuine GE Jenbacher pickup with a 5/8" UNF thread should be adjusted to ¾ - 1¼ turns.

When adjusting, ensure that the pickup is set to the highest elevation. Especially when using a screw head as trigger source, e.g. in type 6 engines, an incorrect adjustment can lead to mechanical triggering and destruction of the pickup.

Default setting: 1 turn = 1.4 mm

GE Proprietary Information: CONFIDENTIAL! Use or disclosure of data contained on this sheet is subject to the restrictions on the cover or on the first page.

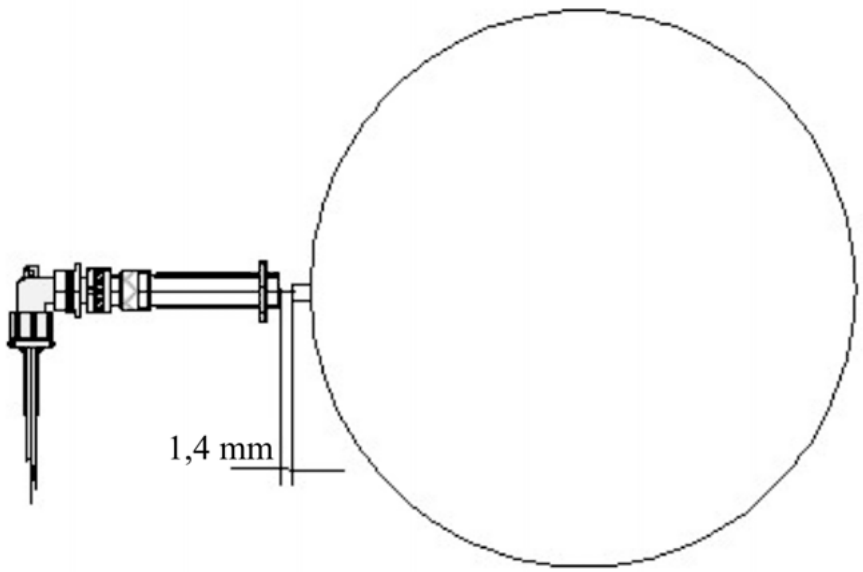

Ensure that the pickup cannot receive any other signals besides the reset or ring-gear signals (e.g. holes, markings or elevations). This risk occurs, for example, if the head of the hexagonal bolt is too close to the ring gear or other failure sources are nearby. The amplitude of the interference signals increases with the speed.

If the failure source cannot be eliminated, increase the distance between the pickup and the trigger source to such an extent that any interference signal peak voltages remain below 1.5 V and therefore below the **SPA24** trigger limit value. The **SPA24** requires a peak voltage from the pickup of at least ±3 V, which is reached at an engine speed of 50 to 90 rpm depending on the pickup distance set (¾ to 1¼ turns). If the voltage is lower than ± 3V, the **SPA24** does not emit any output signals as a result of which no ignition signals are emitted by the **SAFI**.

The distance should therefore be selected in such a way that a sufficient amplitude is available for the regular reset signal or ring-gear signal during the starting procedure and at the same time sufficient protection is guaranteed against any interference signals while at rated engine speed. In general, a distance of 1 to 1¼ turns will prove to be optimal.

In the following two photographs, examples of possible failure sources are shown.

Examples of an interference source based on a type 4 engine flywheel disk

GE Proprietary Information: CONFIDENTIAL! Use or disclosure of data contained on this sheet is subject to the restrictions on the cover or on the first page.

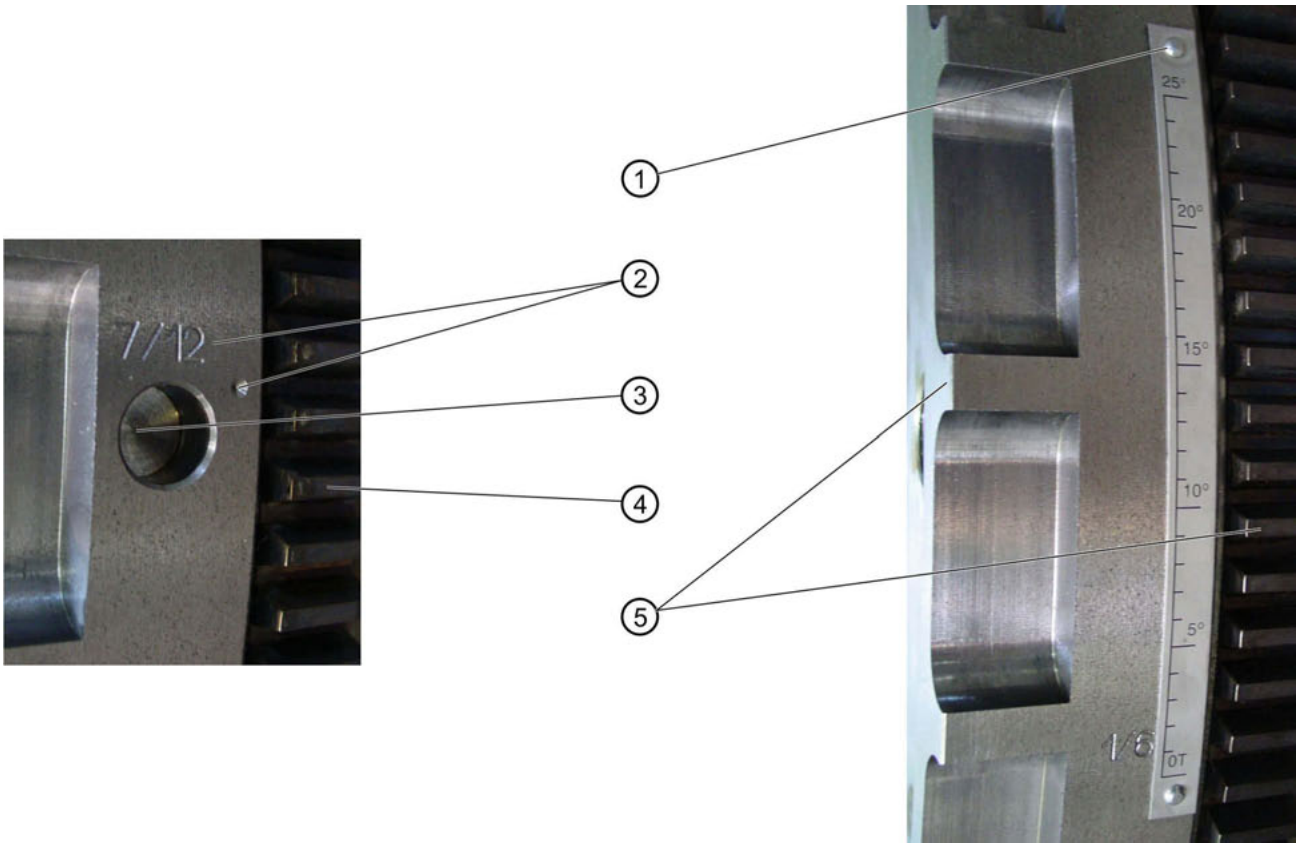

①	Error: Protruding rivets on the marking plate for determining TDC.
②	Error: Excessively-deep punch marks to mark the cylinders can also cause interference signals.
③	Drilled hole as reset trigger source
④	Ring gear
⑤	Error: Reset pick-up position too near to the teeth for the torsion measurement or ring gear.

In the Figure , the reset pickup has been adjusted to an excessive distance (1½ turns) while the trigger pickup has been adjusted to the default setting of 1 turn. A reset signal level of only +/- 2.95 V is achieved at start-up, which is too low for a functional correctly generated digital CAM/RESET output.

GE Proprietary Information: CONFIDENTIAL! Use or disclosure of data contained on this sheet is subject to the restrictions on the cover or on the first page.

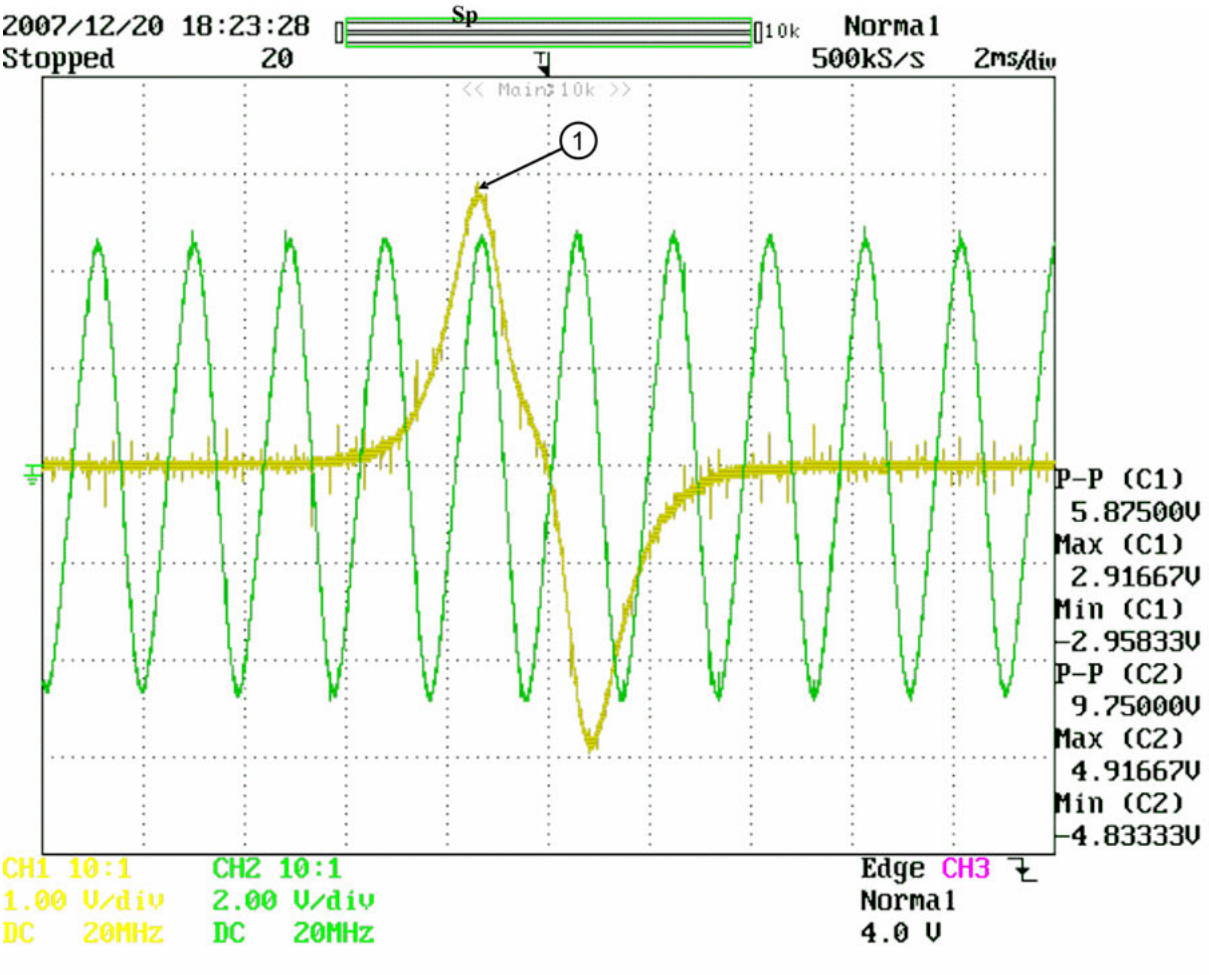

①	Voltage below 3 V trigger level!

CH1: RESET input signal +/- 2.9V (1V/div) / pickup distance 1½ turns

CH2: TRIGGER input signal (attention 2V/div) / pickup distance 1 turn

5 Diagnosis and troubleshooting

Only **SPA24**-related messages are dealt with below.

Detailed information and descriptions of monitoring functions, operational, warning and error messages and setting parameters for the **SAFI** and **DIA.NE XT** can be found in Technical Instruction TI 1502-0071 – **SAFI**.

GE Proprietary Information: CONFIDENTIAL! Use or disclosure of data contained on this sheet is subject to the restrictions on the cover or on the first page.

5.1 Operating notifications:

Message number	Message	Description
B3276	**SAFI** trigger pickup cylinder failure	Display shows cylinder position of **SAFI** with trigger pickup failure
B3277	**SAFI** camshaft/reset pickup cylinder failure	Display shows cylinder position of **SAFI** with camshaft/reset pickup failure

5.2 Error messages

Message number	Message	Description/Solution
A3336	**SAFI** trigger pickup failure	A problem with the trigger signal has been detected. = **SPA24** TRIGGER output signal.
		Check **SPA24** and **SAFI** supply voltage! → Every **SPA24** and **SAFI** is provided with a POWER LED! Check **SPA24** TRIGGER input signal and **SPA24** TRIGGER-output signal (= **SAFI** input signal). → A TRIGGER LED on **SPA24** and each **SAFI** flashes when a pickup input signal is detected. These displays are helpful for checking whether a signal has failed in the event of an error. → Check pickup for contamination (e.g. metal chippings) → The error message during engine start-up can be caused by an incorrect pickup setting. Check the pickup setting acc. to **SPA24** TI 1502-0072 (section 4).
A3337	**SAFI** camshaft/reset pickup failure	A problem with the logical camshaft/reset signal has been detected, = i.e. linked **SPA24** CAM/RESET output signal.
		Check **SPA24** and **SAFI** supply voltage! → Every **SPA24** and **SAFI** is provided with a POWER LED! Check **SPA24** CAM and RESET input signal and **SPA24** logic output signal (= **SAFI** input signal). → On **SPA24** the CAM and RESET LEDs flash when a pickup input signal is detected, and on **SAFI** a CAM LED. These displays are helpful for checking whether a signal has failed in the event of an error. → Check pickup for contamination (e.g. metal chippings) → The error message during engine start-up can be caused by an incorrect pickup setting. Check the pickup setting acc. to **SPA24** TI 1502-0072 (section 4).

GE Proprietary Information: CONFIDENTIAL! Use or disclosure of data contained on this sheet is subject to the restrictions on the cover or on the first page.

1 Introduction 1
2 Description of the system 2
2.1 Mechanical assembly of the device 2
2.2 Gas pressure/gas quality requirements 4
2.3 Electrical connection 4
2.3.1 Device connector 4
2.3.2 Relevant connecting cable 5
2.3.3 Power supply 5
2.3.4 CAN – linking 5
2.3.5 Coding / release of the device 5
3 Commissioning 6
3.1 Parameter setting 6
3.1.1 Indicative values for the GAS PROPORTIONING VALVE/TECJET RECIPE 6
3.1.2 LEANOX recipe 9
3.1.3 ENGINE DATA recipe 9
3.2 DIA.NE visualisation screens 10
3.2.1 LEANOX 10
3.2.2 DETAILS - GAS 10
3.2.3 SYSTEM 10
4 Troubleshooting 11
4.1 Error messages 11
4.1.1 Tripping 11
4.1.2 Warning 12
4.2 Troubleshooting 13
4.2.1 Power supply problems (voltage supply, CAN bus) 13
4.3 Mechanical problems (gas quality and pressure) 13
4.4 Electronic problems (internal errors) 13

1 Introduction

Using the TecJet gas proportioning valve you can specify a desired gas volume, thus dispensing with the gas mixer used until now. Doing so allows you to actively intervene to make mixtures more lean or rich and to directly preset the fuel mixture lambda value. The fuel mixture lambda value is the ratio between the actual combustion air volume and the stoichiometrically required air volume. That is why stoichiometric combustion equals lambda = 1, resulting in improved behaviour while starting and during isolated operation. A zero controller pressure is no longer required. This type of gas proportioning valve can be used in combination with both natural gas and special gases.

GE Proprietary Information: CONFIDENTIAL! Use or disclosure of data contained on this sheet is subject to the restrictions on the cover or on the first page.

2 Description of the system

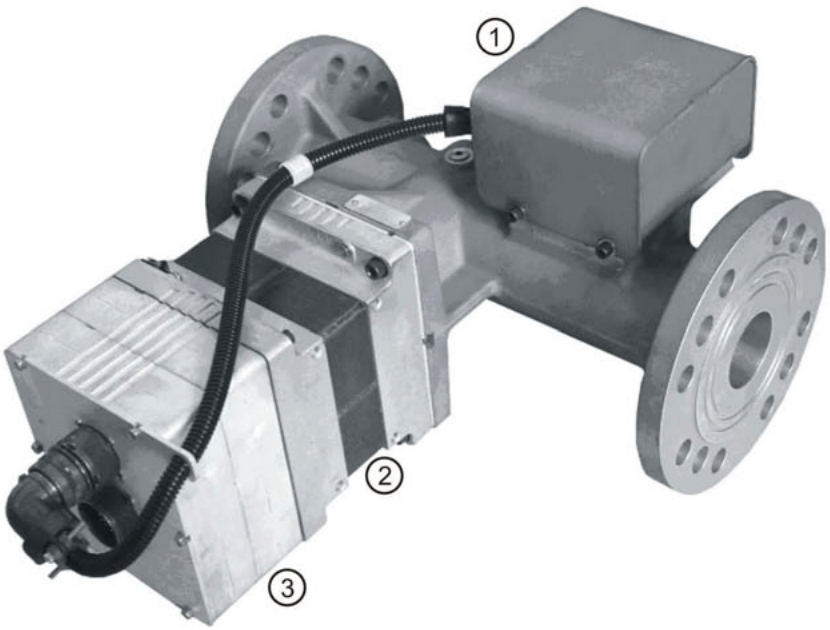

①	Sensor box	③	Actuator electronics
②	Actuator		

The actuator drive with integrated electronics is located on the side of the valve housing. The connector plug is located on the face of the housing. A mechanical pointer is located on the opposite side, indicating the current valve position. The direction of flow is indicated using an arrow on the cast iron housing. On top of the valve is a metal housing containing the device sensors (sensor box).

2.1 Mechanical assembly of the device

The TecJet should be assembled so as to protect it from engine vibrations. In view of control requirements (dead volume) use a flexible hose (approx. 0.5 m) making sure that the maximum admissible distance from the engine connection point does not exceed 1.3 m.

GE Proprietary Information: CONFIDENTIAL! Use or disclosure of data contained on this sheet is subject to the restrictions on the cover or on the first page.

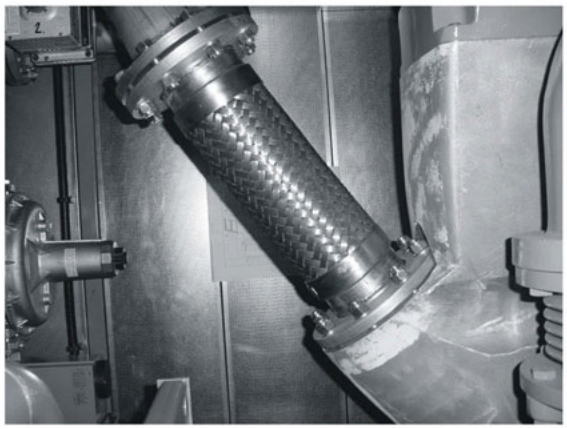

As a guideline, a distance of up to 2 m (at least 6x the rated diameter) between TecJet and the solenoid valves must be maintained to provide a damping system. This should already be taken into account by the manufacturer in the design of the gas train. The manufacturer advises maintaining an intake-side damping distance of 6x the rated device diameter and an output-side damping distance of 2x the rated device diameter and assembling the device according to ANSI/ISA-S75.02 to prevent sensitivity losses. By observing the above distances, these requirements are fulfilled.

The device is mounted horizontally with the sensor box on top. The direction of flow is indicated by means of an arrow on the cast iron housing.

See the Figure below for the position of the individual gas train components.

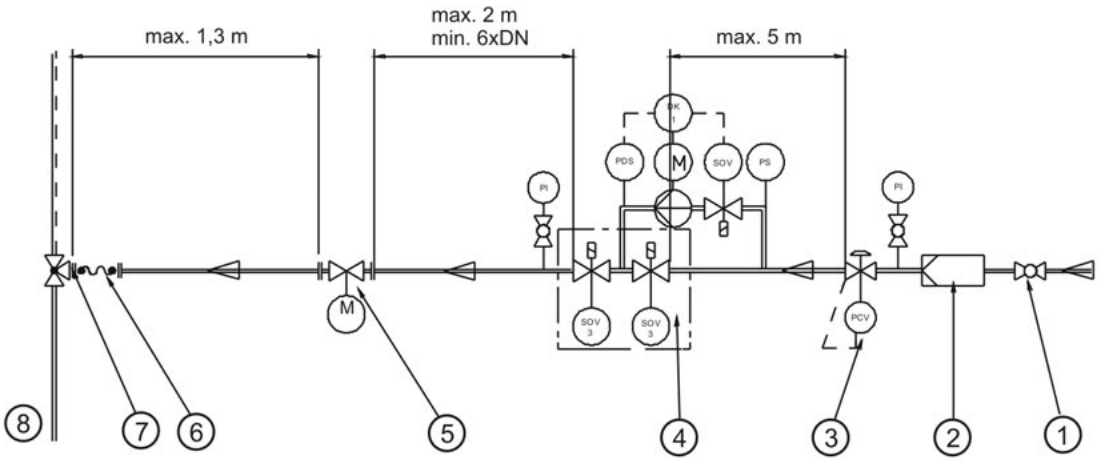

GE Proprietary Information: CONFIDENTIAL! Use or disclosure of data contained on this sheet is subject to the restrictions on the cover or on the first page.

①	ball valve	⑤	TecJet gas proportioning valve
②	Micro filter	⑥	Flexible hose
③	Pre-pressure controller	⑦	Engine connection point
④	Solenoid valves with leak test	⑧	To engine

Whenever several fuel gases need to be mixed, this arrangement is implemented for each individual fuel gas. Once they have passed the gas proportioning valves, the gases are combined and fed to the gas mixer housing or a shared piece of tubing leading to the turbocompressor/compressor intake.

2.2 Gas pressure/gas quality requirements

The differential pressure across the device must be in the 10 – 500 mbar range. The intake-sided pressure must be in the 0.4 bar_{abs} and 1.6 bar_{abs} range. The required gas prepressure at the customer interface follows from the required gas volume, the calorific value, the engine efficiency and pressure losses along the gas pressure control system. When determining the required gas prepressure at the customer interface, the relevant guidelines must be taken into account (the Jenbacher Anlagenkonstruktion and Projektierung departments can help you).

The zero pressure controller is no longer required. The prepressure controller is a standard feature as in practice there is no guarantee that TI 1000-0300/0301 or -0302 will actually be complied with.

Ensure that a relative gas-moisture content percentage of 80 % is not exceeded (in accordance with TI 1000-0300-0301 or -0302) and that measures are taken to prevent condensate from forming (in accordance with TI 1400-0091).

2.3 Electrical connection

2.3.1 Device connector

The TecJet is integrated into the DIA.NE system using a connector. The connector contains both the power supply and the CAN bus. The pin sequence is indicated in the table below.

Meaning	Pin
Power supply +	W
Power supply -	Z
CAN – ID1	H
CAN – ID2	G
CAN – High In	R
CAN – Low In	S
CAN – High Out	T
CAN – Low Out	U
CAN – Gnd	V
CAN - Shield	X

GE Proprietary Information: CONFIDENTIAL! Use or disclosure of data contained on this sheet is subject to the restrictions on the cover or on the first page.

The device earthing (according to CE) is provided by fitting a braided cable which is as short as possible (< 1 m) and has a minimum cable diameter of 2.5 mm² between the relevant connection screw and the engine earth.

2.3.2 Relevant connecting cable

A power supply cable with the following colour/number codes and pin sequence is used to establish the electrical connection.

Description	Colour (number)	Pin
Power supply +	1	W
Power supply -	2	Z
CAN – ID1	4	H
CAN – ID2	3	G
CAN – High IN	Blue	R
CAN – Low IN	White / blue	S
CAN – High OUT	White / orange	T
CAN – Low OUT	Orange	U

2.3.3 Power supply

The supply voltage must be in the 18 - 32 V_{DC} (24 V_{DC} nominal) range and is pole-error protected. The device is also over-voltage protected up to 80 V_{DC}. During operation 65 Watt (250 Watt peak) for TecJet50PLUS and 100 Watt (315 Watt peak) for TecJet110 are required.

2.3.4 CAN – linking

The CAN bus is contained in the connecting cable. The bus lines are linked to the device, also providing for return lines. Using the pins for CAN ID1 and CAN ID2, the node number can be set, resulting in the CAN bus identification.

Device	CAN ID1	CAN ID2	Device	CAN node
1	**Open**	**Open**	**1**	**6**
2	**Minus**	**Open**	**2**	**7**
3	**Open**	**Minus**	**3**	**8**
4	**Minus**	**Minus**	**4**	**9**

In the case of mixed gas applications, devices 1 and 3 are selected for the lower calorific value fuel gas, and device 2 for the higher calorific value fuel gas with a more constant fuel gas quality. See also the relevant TI.

2.3.5 Coding / release of the device

As there is no release pin, the device is put into active mode by sending an amount of gas >0 nl/s through the CAN bus.

GE Proprietary Information: CONFIDENTIAL! Use or disclosure of data contained on this sheet is subject to the restrictions on the cover or on the first page.

3 Commissioning

3.1 Parameter setting

The device requires no settings. Some recipe entries in the DIA.NE system may need to be changed, though.

3.1.1 Indicative values for the GAS PROPORTIONING VALVE/TECJET RECIPE

The indicative values below are established using a type 4 engine running on natural gas. The parameters are indicative for a new Leanox controller with an oil temperature dependent starting procedure and a stationary operation lambda controller.

Description	Default value	Unit
Characteristic restricted by oil temperature minimum	30	°C
Characteristic restricted by oil temperature maximum	70	°C
Volumetric efficiency	0.85	---
Oil temperature point 1	30	°C
Lambda point 1	1.4	---
Oil temperature point 2	70	°C
Lambda point 2	1.4	
Lambda offset for mains parallel operation	0.3	---
Lambda offset for isolated operation	0.3	---
Calorific value	9.971	kWh/Nm^3
Minimum air requirement	9.54	l/l
Standard gas density	720	g/m^3
Delay after start-up	4	s
Delay after mains parallel or isolated operation	10	S
P part	-3	
I part	-20 (as from RPS 7.31 **+** 20)	
Throttle valve setpoint position	4	%
Lambda control range	0.1	---

These settings are input according to the number and nature of the different gas types. The lambda setting range runs from 1 to 2.5.

Value = **1** means **very rich**

Value = **2** means **very lean**

The volumetric efficiency parameter represents the volumetric engine efficiency according to the relevant engine configuration (values to be influenced are of a mechanical nature, e.g. camshaft type). A typical value for type 4 engines with non-Miller camshafts would be 0.85 and 0.73 for engines with Miller camshafts. These values must, however, be determined on a case-by-case basis; the correct default values are preset.

GE Proprietary Information: CONFIDENTIAL! Use or disclosure of data contained on this sheet is subject to the restrictions on the cover or on the first page.

The lambda point 1 and 2 set values correspond to the mixture lambda values at the relevant points on the oil temperature dependent start-up characteristic.

When switching over from stationary operation to mains parallel or isolated operation, the lambda offset mains parallel and isolated operation parameters are added to the fuel mixture lambda value.

The calorific value corresponds to the energy content of one cubic metre of fuel gas under standard conditions (to be calculated using the software).

The minimum air requirement corresponds to the air quantity that must be added per fuel gas quantity in order to obtain stoichiometric combustion (Lambda=1) (to be calculated using the software).

Before commissioning (at least in the case of special gas-fuelled installations), a recent gas analysis must be available and/or the CH4 content must be determined using a gas analysis device. Ideally, also other components such as CO2, O2 and N2 could be established. We would recommend, however, that you calibrate such devices on a weekly basis or have this done.

If the gas analysis is carried out online and is used to determine the gas type interpolation, the following items must receive special attention: the detection time (ideally less than one second), the position of the measurement location in view of the flow times in the piping system (ideally just ahead of TecJet), the reaction time of the analysis devices (ideally in seconds), and the measurement results themselves (verification using a reference measurement device).

The parameters must be set as follows (the tables are indicative only). You can use the software on the service laptop for accurate calculations in the case of complex gas compositions.

You can find the program at https://information.jenbacher.com under the menu item: " Produkte+Service --> Service Datenbank --> Service Bulletins".

GE Proprietary Information: CONFIDENTIAL! Use or disclosure of data contained on this sheet is subject to the restrictions on the cover or on the first page.

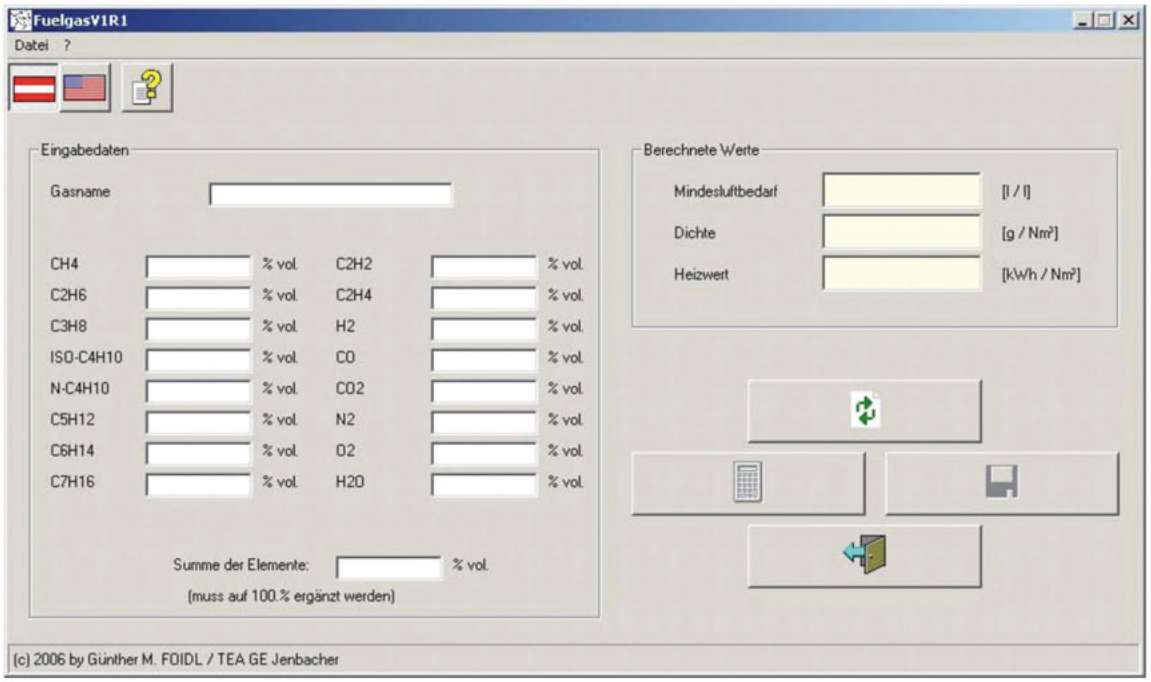

Calorific value: Reduce this parameter in accordance with the CH4 content if the remaining volume parts are complemented using ambient air only (e.g. mine gas application).

CH4 content [%]	Calorific value [kWh/Nm3]
100	9.9
50	4.95
30	2.97

Otherwise, the following guide values apply:

Gas	Calorific value [kWh/Nm3]
Natural gas, dry	9.8 – 11.7
Landfill gas	6 – 5
Landfill gas, drawn in	3 – 5
Mine gas, active	3 – 5
Mine gas, passive	5.5 – 7.7
Biogas	4 - 6

Standard gas density:

GE Proprietary Information: CONFIDENTIAL! Use or disclosure of data contained on this sheet is subject to the restrictions on the cover or on the first page.

Gas	Density [g/m3]
Natural gas, dry	720 - 860
Landfill gas	1220 – 1350
Landfill gas, drawn in	1200 - 1280
Mine gas, active	1000 - 1180
Mine gas, passive	880 – 950
Biogas	1200 - 1500

Minimum air requirement: Describes the air volume required for λ =1 combustion and can be set in accordance with the CH4 content if the remaining volume parts are complemented using ambient air only (e.g. mine gas application).

Indicative values:

CH4 content [%]	Air requirement [l/l]
100	9.54
50	4.77
30	2.86

Otherwise, the following guide values apply:

Gas	Air requirement [g/m3]
Natural gas, dry	9.5 – 11.1
Landfill gas	4.8 – 5.7
Landfill gas, drawn in	2.5 – 4.5
Mine gas, active	2.1 – 4.2
Mine gas, passive	5.7 – 7.6
Biogas	3.8 – 5.3

3.1.2 LEANOX recipe

Settings as usual. Because the gas proportioning valve reacts faster than the gas mixer in the case of incorrect settings, we advise against manually adjusting the Leanox characteristic parameters (without making a Leanox calculation using dia.ne).

3.1.3 ENGINE DATA recipe

This recipe is used to clear the TecJet gas proportioning valve for the visualisation unit and to set the number of gas proportioning valves (important for mixed gas applications).

GE Proprietary Information: CONFIDENTIAL! Use or disclosure of data contained on this sheet is subject to the restrictions on the cover or on the first page.

3.2 DIA.NE visualisation screens

3.2.1 LEANOX

The device is manually operated by entering the fuel mixture lambda value indicated as LAMBDA in the DIA.NE visualisation system.

If the air requirement and gas density are correctly set, the following applies:

TECJET – value in the range [1.0 ... 1.3] Very rich mixture

TECJET – value in the range [1.3 ... 1.8] Lean mixture

TECJET – value in the range [1.8 ... 2.0] Very lean mixture

Manual adjustments must take place in 0.05 increments maximum.

3.2.2 DETAILS - GAS

Measurement values indicated include gas pressure, gas temperature, differential gas pressure across the device and throttle valve position. These data are only available using dia.ne XT/WIN.

3.2.3 SYSTEM

Apart from the known version numbers, the system screen shows the gas proportioning valve programme version (2.02 or higher required).

GE Proprietary Information: CONFIDENTIAL! Use or disclosure of data contained on this sheet is subject to the restrictions on the cover or on the first page.

4 Troubleshooting

4.1 Error messages

4.1.1 Tripping

Message text and number	Error	Solution
TJ CAN KOPPLUNG DEFEKT TJ CAN LINK FAILURE 3093 – Priority 1 As of DIANE XT 2.10 the additional operating notification 3241 is displayed indicating the device concerned.	CAN messages could not be sent.	Check the CAN bus connection. The CAN bus connection must not be interrupted. Check CAN bus terminators and wiring. See CAN bus 1531-0012 Technical Instruction
TJ FALSCHE SOFTWARE TJ WRONG SOFTWARE 3094 – Priority 3 As of DIANE XT 2.10 the additional operating notification 3242 is displayed indicating the device concerned.	TJ software version not DIA.NE compatible and/or not up-to-date.	Install device using correct software and/or have GE Jenbacher mechanic install correct software (version > 2.02).
TJ GASTEMPERATUR NICHT ERFUELLT TJ FUEL GAS TEMPERATURE OUT OF LIMITS 3095 – Priority 1 As of DIANE XT 2.10 the additional operating notification 3243 is displayed indicating the device concerned.	Gas temperature too high or too low; normally, the temperature must be in the –40 to 80 °C range.	Check the gas temperature.
TJ GASVORDRUCK NICHT ERFUELLT TJ FUEL GAS PRESSURE OUT OF LIMITS 3096 – Priority 1 As of DIANE XT 2.10 the additional operating notification 3244 is displayed indicating the device concerned.	Gas temperature or differential pressure too high or too low; normally, the prepressure must be in the 500 to 1600 mbar abs range. The differential pressure across the device must be between 10 and 500 mbar.	Check the prepressure controller settings; check the pipe system for frozen condensate.

GE Proprietary Information: CONFIDENTIAL! Use or disclosure of data contained on this sheet is subject to the restrictions on the cover or on the first page.

Message text and number	Error	Solution
TJ INTERNER FEHLER TJ INTERNAL FAILURE 3097 – Priority 1 As of DIANE XT 2.10 the additional operating notification 3245 is displayed indicating the device concerned.	Defective integrated electronics.	Check the voltage supply and the wiring. Replace the device if the error message cannot be reset.
TJ MECHANISCHE FEHLFUNKTION TJ MECHANICAL MALFUNCTION 3098 – Priority 1 As of DIANE XT 2.10 the additional operating notification 3246 is displayed indicating the device concerned.	Mechanical damage, valve stuck, broken shaft.	Visually check for damage.
GASMENGENSPRUNG GAS AMOUNT STEP TOO HIGH 3099 – Priority 1 As of DIANE XT 2.10 the additional operating notification 3247 is displayed indicating the device concerned.	Excessive gas volume change.	Inadmissible operating conditions, e.g. erratic engine behaviour, rpm variations, sudden charge pressure increases, sudden fuel mixture temperature increases.

4.1.2 Warning

Message text and number	Error	Solution
GASMENGE OBERGRENZE FUEL GAS AMOUNT TOO HIGH 3212 As of DIANE XT 2.10 the additional operating notification 3248 is displayed indicating the device concerned.	Calorific value drop towards the ‚insufficient' range, charge pressure increase, overspeed.	Check the fuel gas requirements, check the gas/calorific value, check the engine requirements.
TJ GASMENGE NICHT ERREICHT TJ FUEL GAS AMOUNT NOT REACHED 3213 As of DIANE XT 2.10 the additional operating notification 3249 is displayed indicating the device concerned.	Prepressure too low, solenoid valves are not opening.	Check and/or adjust the prepressure controller, check whether the solenoid valves work properly.

GE Proprietary Information: CONFIDENTIAL! Use or disclosure of data contained on this sheet is subject to the restrictions on the cover or on the first page.

4.2 Troubleshooting

4.2.1 Power supply problems (voltage supply, CAN bus)

Symptoms	Error	Solution
No TecJet data present on visualisation unit.	No voltage supply	Check the 24 V voltage supply in the interface cabinet for a blown fuse. Otherwise, check the TecJet connection plug.
No TecJet data present on visualisation unit, CAN error messages.	CAN bus wiring not OK, incorrect node number.	Check signal circuit at CAN bus (terminators 120 Ω, forward resistance CAN-Low → CAN-High). Connect the TecJet to the CAN bus before the ignition. If the remaining devices at the CAN bus are OK, check the connecting plug at the TecJet.

4.3 Mechanical problems (gas quality and pressure)

Symptoms	Error	Solution
Unstable engine running behaviour, excessive richness, excessive gas moisture (>80 %).	Condensate in sensor compensation line (possibly frozen).	Disassemble TecJet, open gas flow system and dry using hot air.
Unstable engine running, insufficient gas pressure.	Excessive gas prepressure fluctuations or gas prepressure too high/ low.	Check the prepressure controller, check the gas train for pressure loss.
Unstable engine running, ‚Lox Limit' engine tripping.	Significant gas quality fluctuations.	Check on gas supply, current gas analysis and volume of gas actually supplied.

4.4 Electronic problems (internal errors)

Symptoms	Error	Solution
Internal device error.	Defective electronics.	Replace device.

GE Proprietary Information: CONFIDENTIAL! Use or disclosure of data contained on this sheet is subject to the restrictions on the cover or on the first page.

1 Instructions on torque values 1
2 Instructions for testing and replacing reduced-shaft bolts 1

1 Instructions on torque values

1.1 For a table of torque values, refer to TI 1902-.... in the respective Operator's Manual.

1.2 All screws, bolts and/or nuts listed in TI 1902-.... must only be tightened using the specified tightening torque (and angular displacement) and only using a suitable torque wrench. During tightening, fresh engine lubricating oil must be used as a lubricant (never use molybdenum-based grease!). Apply this oil to the clean thread and to the bolt or screw head and nut contact surface.
Always follow the instructions in TI 000-00-003!

⚠ Never use screws, bolts, nuts or washers which show defects (even slight ones) e.g. on thread or contact faces.
When using a thread locking liquid, use only **LOCTITE 243**.

2 Instructions for testing and replacing reduced-shaft bolts

⚠ After the engine has been dismantled, all reduced-shaft bolts must be tested to ensure that they are in absolutely perfect condition In the absence of suitable testing equipment or adequate specialist knowledge, especially when the cost of testing is greater than the value of the bolts, they should be replaced.

These also include reduced-shaft bolts that are not usually removed during a general overhaul of the engine (e.g. counterbalance bolts, flywheel bolts, etc.).

2.1 The contact faces of the bolt head, the transitional points and the shaft surfaces must be free of notches, frictional corrosion or rust formation.
The cross-grinding or phosphatisation of the bolt-head contact surfaces must be undamaged.

2.2 The contact faces must be at right angles to the thread.

2.3 Check reduced-shaft bolts for cracks.

2.4 The thread must be free of defects, such as cracks, frictional corrosion, distortions, etc.

2.5 If the criteria set out in sections 2.1 - 2.4 have not been satisfied, new bolts must be used.
Whenever new bolts are to be used, replace the entire set of bolts.

2.6 In the event of damage to con-rods, main bearings or pistons, replace all the bolts in the "surrounding area" and all bolts that work together as a set.

GE Proprietary Information: CONFIDENTIAL! Use or disclosure of data contained on this sheet is subject to the restrictions on the cover or on the first page.

Make sure to drip some fresh engine lubricating oil on the screw thread and sealing faces of screws and bolts which are not secured using Loctite! Technical Instruction No.: 000-00-003 must be followed!

Tightening of screws must always be carried out crosswise with frequent changes between the screws (see Figure).

1 Tightening torques

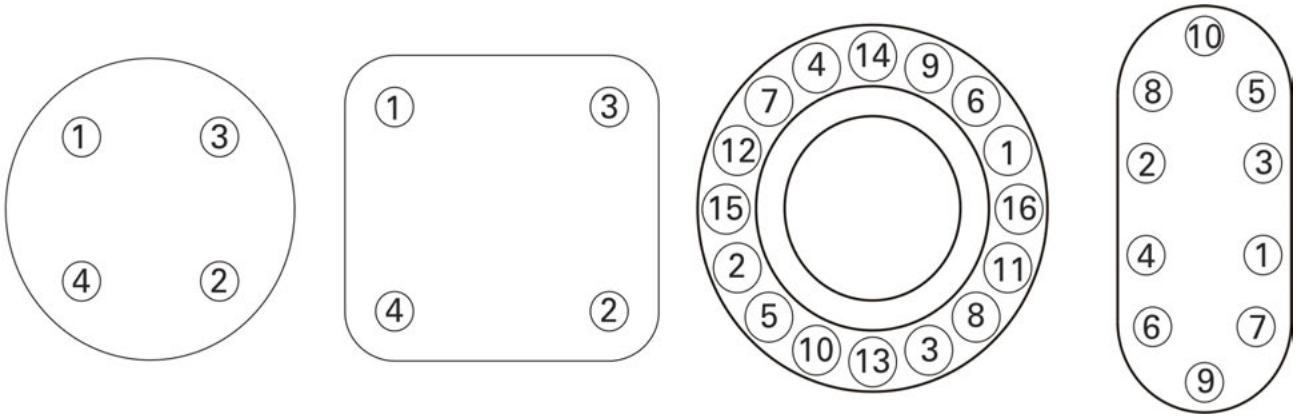

GE Proprietary Information: CONFIDENTIAL! Use or disclosure of data contained on this sheet is subject to the restrictions on the cover or on the first page.

	Description	Drawing No. Line No.	Thread	Screwing torque (double-end stud) Nm	Screwing torque (double-end stud) lbf. ft	Tightening torque Nm	Tightening torque lbf. ft	Remarks	Graphical representation	Relevant maintenance work
1	big-end bolt	J 0859 402 02 05 379058	M18 x1.5			°100/60		during initial assembly, use the angular displacement method	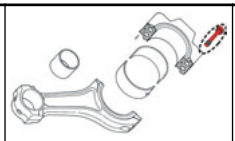	
						260		during field assembly, use the tightening torque		
2	Counterweight bolt	J 0757 603 00 09 304035	M18 x1.5			160/60°		assembled using angular displacement method, secured using Loctite 243		
3	cylinder screw with collar for vibration damper mounting (J412 and 420)	J 0669 803 00 02 336335	M16 x1.5			100/100°		during initial assembly, use the angular displacement method, tightened crosswise, screw length 148 mm (5.826 in)	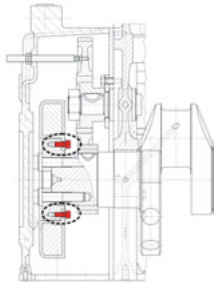	
						290		during field assembly, use the tightening torque		

GE Proprietary Information: CONFIDENTIAL! Use or disclosure of data contained on this sheet is subject to the restrictions on the cover or on the first page.

	Description	Drawing No. Line No.	Thread	Screwing torque (double-end stud) Nm	Screwing torque (double-end stud) lbf. ft	Tightening torque Nm	Tightening torque lbf. ft	Remarks	Graphical representation	Relevant maintenance work
4	cylinder screw with collar for vibration damper mounting (J416 and 420)	J 0858 103 00 26 337147	M16 x1.5			110/110°		during initial assembly, use the angular displacement method, tightened crosswise, screw length 168 mm (5.826 in)	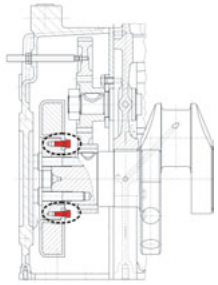	
						290		during field assembly, use the tightening torque		
5	cylinder screw with collar for vibration damper mounting (J416)	J 0859 403 00 26 341743	M16 x1.5			90/110°		during initial assembly, use the angular displacement method, tightened crosswise, screw length 158 mm (5.826 in)	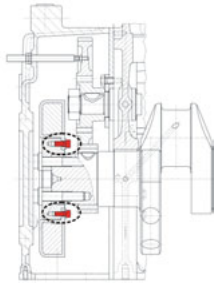	
						290		during field assembly, use the tightening torque		
7	Flywheel mounting bolt	J 0859 03 00 16 291727	M20 x1.5			220/180°		assembled using angular displacement method, tightened crosswise	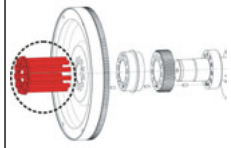	

GE Proprietary Information: CONFIDENTIAL! Use or disclosure of data contained on this sheet is subject to the restrictions on the cover or on the first page.

	Description	Drawing No. Line No.	Thread	Screwing torque (double-end stud)		Tightening torque		Remarks	Graphical representation	Relevant maintenance work
				Nm	lbf. ft	Nm	lbf. ft			
8	Bolt to lubrication-oil pump	100311	M12			70		Locked using Loctite 243	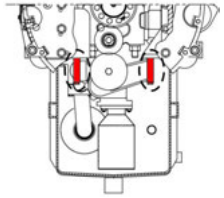	
9	roller tappet fixture bolt (tappet guide)	337283	M10			45		Locked using Loctite 243		
10	Main bearing bolt	J 0859 205 01 15 417768	M24	220					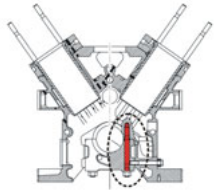	
11	main bearing nut	J 0859 205 01 19 300822	M24						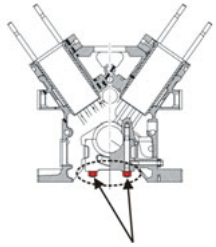	

GE Proprietary Information: CONFIDENTIAL! Use or disclosure of data contained on this sheet is subject to the restrictions on the cover or on the first page.

	Description	Drawing No. Line No.	Thread	Screwing torque (double-end stud)		Tightening torque		Remarks	Graphical representation	Relevant maintenance work
				Nm	lbf. ft	Nm	lbf. ft			
	Hydraulic system	422734 Messrs. ITH						1180 bar permanent strain: 0.84 -0.88 mm If no hydraulic power system is available on-site, tighten the nuts as follows!	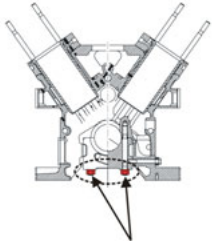	
						200/90		assembled using angular displacement method, secured using Loctite 243		
12	tie-rod bolt	302652	M18			270			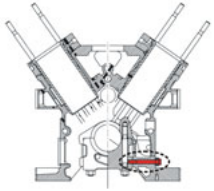	
13	cylinder head screw	J 0859 05 00 45 277499	M22 x2.5	120					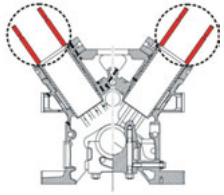	

GE Proprietary Information: CONFIDENTIAL! Use or disclosure of data contained on this sheet is subject to the restrictions on the cover or on the first page.

	Description	Drawing No. Line No.	Thread	Screwing torque (double-end stud) Nm	Screwing torque (double-end stud) lbf. ft	Tightening torque Nm	Tightening torque lbf. ft	Remarks	Graphical representation	Relevant maintenance work
14	Cylinder-head nut	J 0614 105 01 18 291723	M22 x2.5						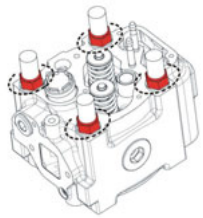	
	Hydraulic system	422734 Messrs. ITH						885 bar If no hydraulic power system is available on-site, tighten the nuts as follows!		
						20 0/90°		following pretensioning at 200 Nm (147 lb.ft), tighten crosswise in two stages at angles of 45° each.		
15	Bolt for Knock sensor	100418	M8 x 25					Do not use a filler ring	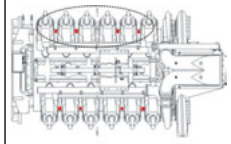	
16	adapter nut for knock sensor	396976	M22			60			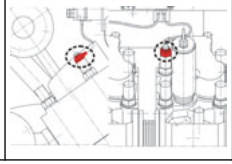	

GE Proprietary Information: CONFIDENTIAL! Use or disclosure of data contained on this sheet is subject to the restrictions on the cover or on the first page.

	Description	Drawing No. Line No.	Thread	Screwing torque (double-end stud)		Tightening torque		Remarks	Graphical representation	Relevant maintenance work
				Nm	lbf. ft	Nm	lbf. ft			
17	plug for combustion chamber borehole		M24			30			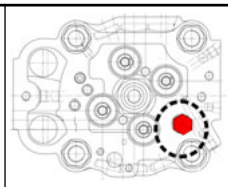	
18	Double-end stud for rocker support	J 0859 06 00 14 282383	M12		30			Locked using Loctite 243	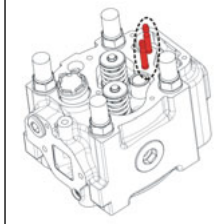	
19	nut for rocker arm support	101824	M12			63			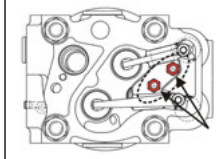	
20	Spark plug in cylinder head		M18 x1.5			40		Sprayed with Ultratherm	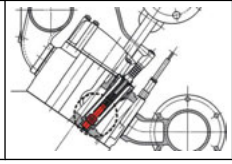	

GE Proprietary Information: CONFIDENTIAL! Use or disclosure of data contained on this sheet is subject to the restrictions on the cover or on the first page.

	Description	Drawing No. Line No.	Thread	Screwing torque (double-end stud) Nm	Screwing torque (double-end stud) lbf. ft	Tightening torque Nm	Tightening torque lbf. ft	Remarks	Graphical representation	Relevant maintenance work
21	Spark plug sleeve extension	J 0859 206 04 04 350108	M48 x1.5			260			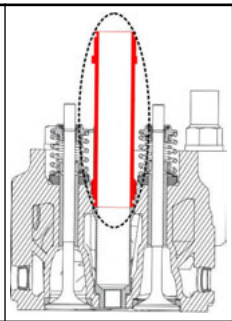	
22	Sleeve for engine lifting system	J 0859 111 00 02 316214	M22			150			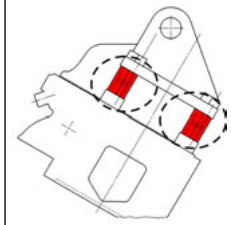	
23	Bolt for engine lifting system	100633	M20			150			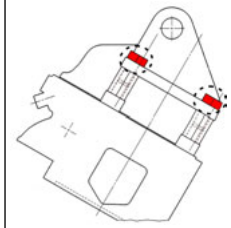	
24	bolt for bearing housing in the gearbox	B 0260 10 34 100558	M12			80			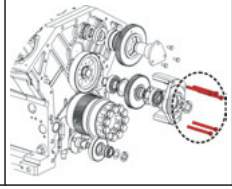	

GE Proprietary Information: CONFIDENTIAL! Use or disclosure of data contained on this sheet is subject to the restrictions on the cover or on the first page.

	Description	Drawing No. Line No.	Thread	Screwing torque (double-end stud)		Tightening torque		Remarks	Graphical representation	Relevant maintenance work
				Nm	lbf. ft	Nm	lbf. ft			
25	bolt between gear wheel housing and crankcase	100481	M12			80			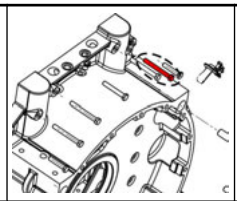	
26	Bolt for support (oil pressure line)	100484	M12			70		Locked using Loctite 243	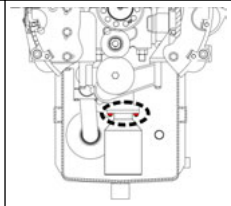	
27	nut for oil basket mounting	101872	M10					Locked using Loctite 243	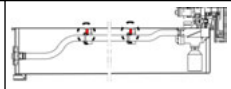	
28	nut for mounting the round bar brackets	101874	M12					Locked using Loctite 243	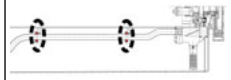	
29	bolt between gear wheel housing and crankcase	100485	M12			80			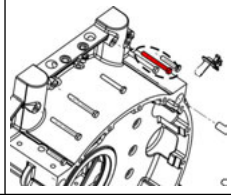	
30	bolt between gear wheel housing and crankcase	304022	M20 x2.5			530			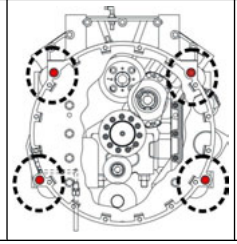	

GE Proprietary Information: CONFIDENTIAL! Use or disclosure of data contained on this sheet is subject to the restrictions on the cover or on the first page.

	Description	Drawing No. Line No.	Thread	Screwing torque (double-end stud)		Tightening torque		Remarks	Graphical representation	Relevant maintenance work
				Nm	lbf. ft	Nm	lbf. ft			
31	bolt between gear wheel housing and crankcase	114963	M16			190			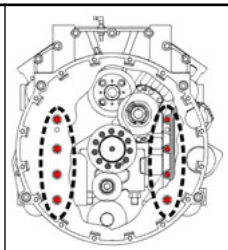	
32	bolt between gear wheel housing and crankcase	100484	M12			80			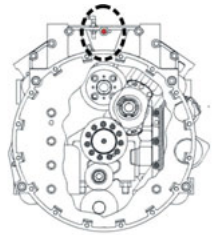	
33	bolt for thrust bearing (camshaft)	100438	M10			45		Locked using Loctite 243	m 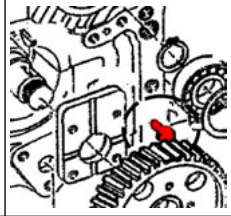	
34	bolt for shaft mounting between crankshaft and oil pump	100470	M12			80		Locked using Loctite 243	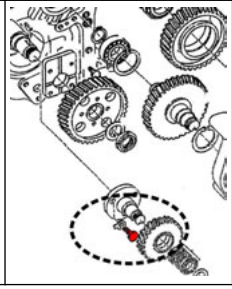	

GE Proprietary Information: CONFIDENTIAL! Use or disclosure of data contained on this sheet is subject to the restrictions on the cover or on the first page.

	Description	Drawing No. Line No.	Thread	Screwing torque (double-end stud) Nm	Screwing torque (double-end stud) lbf. ft	Tightening torque Nm	Tightening torque lbf. ft	Remarks	Graphical representation	Relevant maintenance work
35	bolt in camshaft gear	100391	M5x 10			6		Locked using Loctite 243	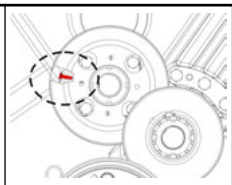	
36	Bolt for split-type camshaft (412)	100352	M16			190		Locked using Loctite 603		
37	Nut for split-type camshaft (416 and 420)	101849	M16			270				
38	engine oil pan bolt	101249	M12 x 35			80		without extension sleeve	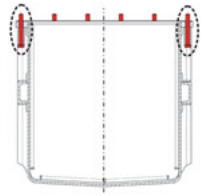	
39		392739	M12 x 85			110		with extension sleeve		
40	bolt to mixture cooler cover	115245	M10 x70			65			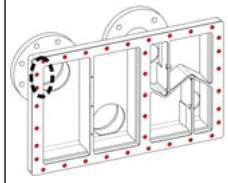	
		115244	M10 x40			45				
41	bolt for connection between mixture cooler console and crankcase	252240	M20			380			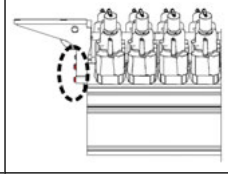	

GE Proprietary Information: CONFIDENTIAL! Use or disclosure of data contained on this sheet is subject to the restrictions on the cover or on the first page.

	Description	Drawing No. Line No.	Thread	Screwing torque (double-end stud)		Tightening torque		Remarks	Graphical representation	Relevant maintenance work
				Nm	lbf. ft	Nm	lbf. ft			
42	bolt for connection between mixture cooler console and crankcase	100317	M12			80			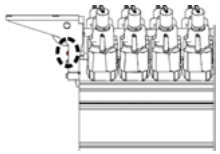	
43	bolt for connection between mixture cooler console and crankcase	114975	M20			380			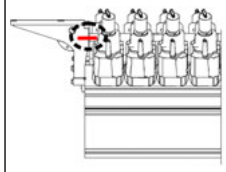	
44	Bolt between mixture cooler and console	100498	M16			190			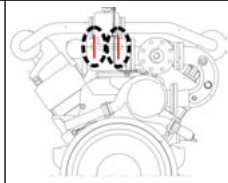	
45	Bolt between mixture intake manifold and crankcase	100492	M16			190			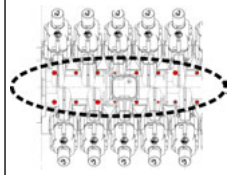	
46	Exhaust gas line bolt between T-piece and cylinder head	1000214	M12			80			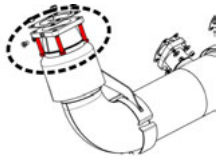	

GE Proprietary Information: CONFIDENTIAL! Use or disclosure of data contained on this sheet is subject to the restrictions on the cover or on the first page.

	Description	Drawing No. Line No.	Thread	Screwing torque (double-end stud)		Tightening torque		Remarks	Graphical representation	Relevant maintenance work
				Nm	lbf. ft	Nm	lbf. ft			
47	Exhaust manifold bolt	328972	M16			190		Sprayed with Ultratherm		
48	Nut for mounting the funnel before compressor intake	101872 101874	M10 / M12					Locked using Loctite 243	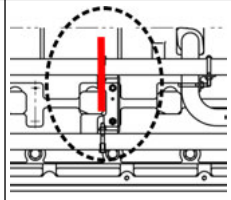 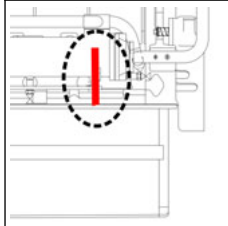	
49	Exhaust manifold nut	328973	M16			190		Sprayed with Ultratherm	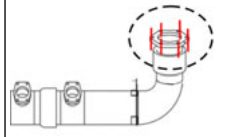	

GE Proprietary Information: CONFIDENTIAL! Use or disclosure of data contained on this sheet is subject to the restrictions on the cover or on the first page.

	Description	Drawing No. Line No.	Thread	Screwing torque (double-end stud) Nm	Screwing torque (double-end stud) lbf. ft	Tightening torque Nm	Tightening torque lbf. ft	Remarks	Graphical representation	Relevant maintenance work
50	Exhaust manifold bolt	302310	M16			190		Sprayed with Ultratherm	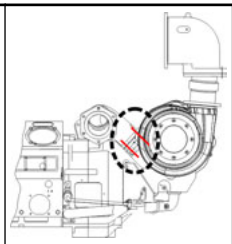	
51	Exhaust manifold nut	302307	M16			190		Sprayed with Ultratherm	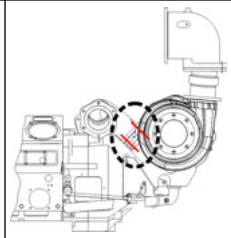	
52	Bolt in throttle valve handle	100459	M10 x 45					Locked using Loctite 243	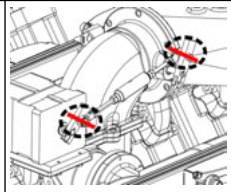	
53	Bolt between exhaust gas turbocharger console and crankcase	268955 236906	M20			380			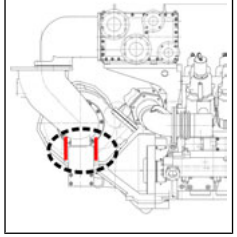	

GE Proprietary Information: CONFIDENTIAL! Use or disclosure of data contained on this sheet is subject to the restrictions on the cover or on the first page.

	Description	Drawing No. Line No.	Thread	Screwing torque (double-end stud) Nm	Screwing torque (double-end stud) lbf. ft	Tightening torque Nm	Tightening torque lbf. ft	Remarks	Graphical representation	Relevant maintenance work
									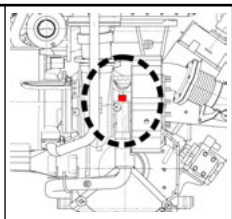	
54	Bolt between exhaust gas turbocharger and exhaust gas turbocharger console	236906	M20			380			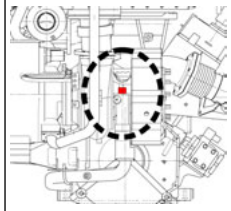	
		114967	M16			190			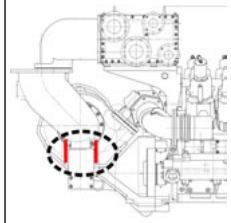	
55	bolt for fastening tightening strap – compressor and turbine housing		M12			60			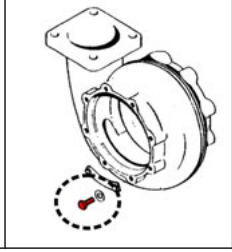	

GE Proprietary Information: CONFIDENTIAL! Use or disclosure of data contained on this sheet is subject to the restrictions on the cover or on the first page.

	Description	Drawing No. Line No.	Thread	Screwing torque (double-end stud) Nm	Screwing torque (double-end stud) lbf. ft	Tightening torque Nm	Tightening torque lbf. ft	Remarks	Graphical representation	Relevant maintenance work
56	bolt for crankcase and exhaust manifold support	100473 100470 100479	M12			80			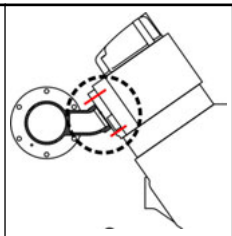	
57	Boost pressure, cooling water and oil pressure sensors					40			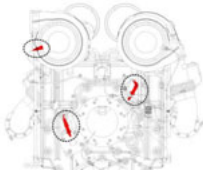	
58	nut for securing the compensator to the exhaust gas turbo-charger	101812	M8			23		Sprayed with Ultratherm	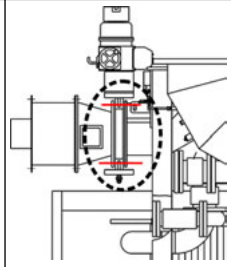	
		101815	M10			45			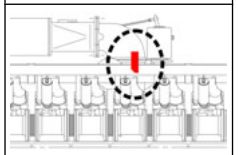	
59	Bolts for securing the exhaust gas turbo-charger outlet manifold to support	100616	M16			190			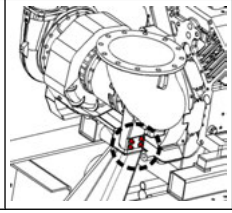	

GE Proprietary Information: CONFIDENTIAL! Use or disclosure of data contained on this sheet is subject to the restrictions on the cover or on the first page.

	Description	Drawing No. Line No.	Thread	Screwing torque (double-end stud)		Tightening torque		Remarks	Graphical representation	Relevant maintenance work
				Nm	lbf. ft	Nm	lbf. ft			
60	Bolts for securing the exhaust gas turbo-charger outlet manifold to frame	120224	M16			190			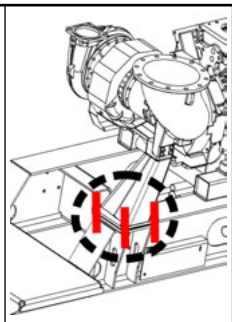	
61	Iskra starter, type AZG:									
	Nut for securing the positive and negative terminals		M12			21			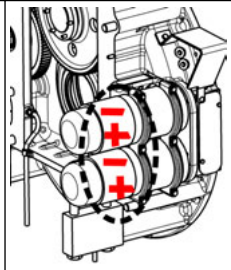	
	Hexagonal nut for connection 50		M6			5.8			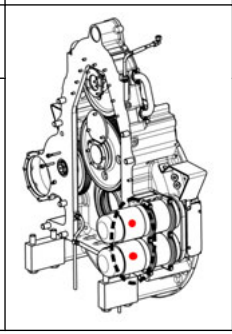	
	Hexagonal nut for connection 45 (multi-starter applications with parallel starter relays)		M10			15				

GE Proprietary Information: CONFIDENTIAL! Use or disclosure of data contained on this sheet is subject to the restrictions on the cover or on the first page.

	Description	Drawing No. Line No.	Thread	Screwing torque (double-end stud)		Tightening torque		Remarks	Graphical representation	Relevant maintenance work
				Nm	lbf. ft	Nm	lbf. ft			
62	Hexagonal nut (at rocker arm) for inlet/ exhaust valve adjustment bolt	113807	M14 x1.5			80			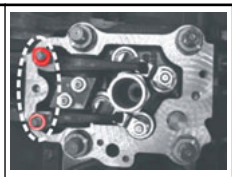	
63	Hexagonal nut (at valve lifter) for inlet/ outlet valve adjustment bolt	113793	M12 x1.5						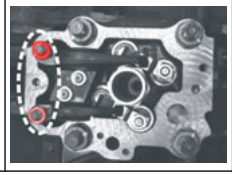	

GE Proprietary Information: CONFIDENTIAL! Use or disclosure of data contained on this sheet is subject to the restrictions on the cover or on the first page.

1 General 1
1.1 Employer's duties 1
1.2 Employee's duties 1
1.3 Safety of machines and associated electrical equipment 1
2 Specialist field - electrical engineering 1
2.1 Definition of terms 1
2.2 Spheres of activity and required qualifications 3
2.3 Complying and dealing with necessary technical informational materials 4
2.3.1 Information materials 4
2.3.2 Hand-over and handling (duty to instruct) 5
2.3.3 Sources of information 5
2.4 Concluding explanatory note 5

1 General

1.1 Employer's duties

Employers are required to assume responsibility for the safety and health of employees in all aspects of their work. Employers have to take any measures required to protect life, health and standards, including measures to prevent work-related dangers, to provide information and instruction and to provide a suitable organisation and the required resources.

First and foremost, companies contracted to carry out work must comply with all applicable country-specific regulations.

1.2 Employee's duties

Employees are legally required to apply the measures to protect life, health and standards as laid down in statutory legislation and official regulations and in accordance with their training and their employer's instructions. They have to behave in such a way that avoids causing danger wherever possible.

1.3 Safety of machines and associated electrical equipment

After proper assembly/installation and completion of commissioning, GE Jenbacher machines and the associated electrical equipment comply with all applicable EU directives and therefore European safety and health requirements (Machinery, Electro-Magnetic Compatibility and Low-Voltage Directives).

2 Specialist field - electrical engineering

2.1 Definition of terms

Electrical specialist

The electrical specialist must (and can) recognise potential dangers and take responsibility for assessing the work given to him/her.

- Technical qualification achieved by successful completion of a specialist training course (e.g. electrical engineer, master electrician, qualified electrician).

GE Proprietary Information: CONFIDENTIAL! Use or disclosure of data contained on this sheet is subject to the restrictions on the cover or on the first page.

  - Similarly, several years of work experience – on-the-job-training - in a particular field of electrical engineering can impart the required knowledge and skills, and form the basis for qualification as a skilled electrician for limited ranges of tasks
    (e.g. staff who repair plants and carry out minor modifications).
- Special knowledge in the field of "electrical plants based on block heating/power station technology using gas combustion engines".
- Knowledge of the applicable electrical engineering regulations and employee protection regulations
  (e.g. EN 50110-1 + EN 50110-2-x, BGV A3, ÖVE/ÖNORM E 8001-1, VDE 0100-410, HD 60364-4-41, IEC 60364-4-41, ÖVE/ÖNORM E 8001-6-61, VDE 0100-600, HD 60364 6, IEC 60364-6).

A person instructed in electrical engineering is someone who has been instructed and if necessary trained by an electrical specialist for the tasks allotted to him/her and on the potential dangers arising from incorrect behaviour, as well as in terms of the protective measures required.

A person instructed in electrical engineering is **not** allowed to assemble, alter or maintain electrical plant and equipment **on his/her own**. This may only be done under the direction and supervision of an electrical specialist.

Operation of electrical plants

Covers all activities (**operating and working**) on and in electrical plants, as well as on and with electrical equipment.

Working on electrical plants

This includes the **manufacture, assembly**, modification, maintenance and repair of electrical plants and equipment (also, for example, clearing faults).

Operating electrical plants and equipment

In principle this can be any work performed on setting, switching and controlling devices
(e.g. switching a power switch, replacing a plug fuse).

EN 50110-1 + EN 50110-2-x Operation of electrical installations:

This standard covers the operation of and all work on, with or in the vicinity of electrical installations. This includes electrical installations of all voltage levels from low voltage to high voltage.

Initial start-up

An electrical plant may only be started up for the first time when a test has proved that the equipment conforms, electrically and mechanically, to the safety requirements specified in

- accident prevention regulations, and
- electrical engineering rules.

The same applies to restarting after a repair (in particular, testing the measures to protect against accidental contact).

GE Proprietary Information: CONFIDENTIAL! Use or disclosure of data contained on this sheet is subject to the restrictions on the cover or on the first page.

Employee protection regulations

As the terms are generally understood, **national provisions** (laws and orders) and accident prevention regulations issued, for example, by professional associations, are deemed to be employee protection regulations.

The legal status of an **accident prevention regulation** must be inferred from the law or from the individual regulations (e.g. BGV A3 is legally binding in Germany).

Electrical engineering rules/provisions

This is "generally" accepted engineering practice contained, for example, in the IEC, CENELEC EN, CENACLE HD VDE, and ÖVE provisions (accepted = the majority of the experts are convinced of their correctness). Legislators and regulators **refer** to the "(**Generally**) **recognised rules of the trade**" and their legal status therefore follows from this.

ÖVE	Austrian Electrotechnical Association
VDE	German Association for Electrical, Electronic & Information Technologies
CENELEC	European Committee for Electrotechnical Standardisation
IEC	International Electrotechnical Commission

2.2 Spheres of activity and required qualifications

Work on electrical plants

Exclusively by **electrical specialists**

or carried out under their **direction** and **supervision**

- Limited in space and time, direction and supervision relate to a clear-cut task or a defined job (it must not mean in every case that the electrical specialist is required to be permanently "on site"). The electrical specialist's "responsibility for direction and supervision" covers, in particular:
  - Induction (introduction, training)
  - Instructing about possible dangers and safe behaviour (as well as regular or continuous supervision)
  - Introduction and employment of some supervisory staff to whom, after relevant instruction by the electrical specialist, supervisory duties can be assigned to assist the electrical specialist.
  - Monitoring to ensure that the work is carried out properly.

Operating electrical plants and equipment

- These duties must be carried out by a person who is at least **instructed in electrical engineering**.
  - For the following examples, an employee must be at least qualified as an instructed person:
  - Cleaning electrical plants
  - Working close to electrically live parts
  - Determining zero voltage
  - Activation of final control elements which are required for the safety or functioning of an electrical plant or electrical equipment.

GE Proprietary Information: CONFIDENTIAL! Use or disclosure of data contained on this sheet is subject to the restrictions on the cover or on the first page.

Initial start-up

- Must be carried out by an **electrical specialist**

2.3 Complying and dealing with necessary technical informational materials

2.3.1 Information materials

In our **case**, the general term "informational materials" includes

General provisions for employee protection.

- Laws and statutory regulations

Accident prevention regulations, such as

- Electrical plant and equipment (**BGV A3**) - Germany
- Operation of electrical high-voltage plant, basic regulations **EN 50110-1 + EN 50110-2-x**

Electrical engineering provisions

"Generally accepted engineering practice" (e.g. IEC, CENELEC EN, CENELEC HD and VDE regulations or standards) covers, for example, the following subjects:

- Assembly of electrical high-power plant with nominal voltage up to 1000V and = 1500V
  - Definitions and protection against hazardous shock currents, ÖVE/ÖNORM E 8001-1
  - Electrical equipment, ÖVE EN 1 Part 2, ÖVE/ÖNORM E 8001-2-x
  - Quality and use of wiring and cables, ÖVE-EN 1 part 3, ÖVE/ÖNORM E 8001-3-41
- Electrical high-voltage plant and emergency power supply in structural works for communal facilities, ÖVE/ÖNORM E 8002-x, VDE 0100-718
- Electrical high-power plant in hospitals and in premises used for medical purposes outside hospitals, ÖVE EN 7, VDE 0100-710
- Assembly of electrical high-power plant with nominal voltages up to 1000 V - DIN-VDE 0100
  - Protective measures - Group 400 (part 410, 470)
  - Selection and assembly of electrical equipment - Group 500
  - Tests - Group 600 (part 600 - initial tests)
- Low-voltage switchgear and control gear assemblies - type-tested and partially type-tested assemblies, EN / IEC 60439-1
- Safety of machinery - Electrical equipment of machines - General Requirements, EN / IEC 60204-1
-

GE Proprietary Information: CONFIDENTIAL! Use or disclosure of data contained on this sheet is subject to the restrictions on the cover or on the first page.

2.3.2 Hand-over and handling (duty to instruct)

Information materials

- To be **handed over** to **foremen** and other **supervisors** as well as other people who work under their own responsibility.
- **Other employees** who work on electrical equipment or electrical plants must be given the opportunity to **read** these materials (e.g. by creating a reading area or posting them on notice boards).
  The workforce must be informed of the rules and operating regulations applicable to their work and have them explained, and make it their duty to follow them. This must be repeated at suitable intervals as dictated by the operational conditions.
  People who only work temporarily in and on plants, or are only involved in specific jobs, must be informed of the dangers and the protective measures associated with these jobs and warned to be careful.

For all work as defined in the provision on the "Operation of electrical high-power plant", a suitable person who is familiar with the necessary safety measures must be appointed as the person immediately responsible.

If you adhere to the "generally accepted engineering practice" it is unlikely that you will give the appearance of having acted negligently. You are therefore strongly urged to follow the "generally accepted engineering practice".

2.3.3 Sources of information

- Laws or electrical engineering laws and statutory regulations arising from them
- Professional organisations ➡ Accident prevention regulations VBG 4
- Trade associations (or committees) ➡ ÖVE or VDE rules
- Standards institutes, e.g. DIN and ÖNORM
- European Committee for Electrotechnical Standardisation (CENELEC) EN Standards, HD (Harmonisation Documents)
- International Electrotechnical Commission (IEC) ➡ IEC publications (international standard).

2.4 Concluding explanatory note

The contents of the above sections are based on current Austrian and German regulations. Basically, this section provides a path which, if converted into appropriate action, achieves a sufficiently high level of safety in terms of protecting human life and equipment. All those companies or operatives engaged in the setting up or installation of the above systems, who are subject to legislation other than that of Austria, must of course act strictly in accordance with the regulations by which they are bound. The above guidelines are intended, above all, to focus attention on the basic issues and call on those in executive positions to take considered action.

The subject of "commissioning" is only dealt with at a basic level because the commissioning of GE Jenbacher combined power/heat systems or electrical power generation systems demands more extensive and specialised training. GE Jenbacher does not consider technical training in electrical engineering alone to be sufficient for this task.

GE Proprietary Information: CONFIDENTIAL! Use or disclosure of data contained on this sheet is subject to the restrictions on the cover or on the first page.

Technical Instruction: TA 2300-0006
Security tips when connecting GE Jenbacher Installations to the Internet

1 General 1
2 Safety risks / danger 1
3 Solution based on GE Jenbacher Firewall 2
4 Warning 3

1 General

The GE Jenbacher HMI (Human Machine Interface) provides customer connectivity via network connections. Using this connection, the customer is able to access GE Jenbacher's DIA.NE WIN® application and thus control the plant remotely.

This network connection was EXCLUSIVELY planned by GE Jenbacher for connections to local customer networks (customer LANs).

By the use of today's technologies and because of widespread Internet connectivity, the network connections referred to offer a possibility for connecting the plant to the Internet. Customers often use a network router with port-forwarding for this application.

This technical instruction explains the risk associated with this solution and shows the appropriate solution from a security standpoint provided by GE Jenbacher.

2 Safety risks / danger

Using such routers with port-forwarding contains a wide range of **serious security issues!**

Some examples:

- Unencrypted transmission of data over the Internet
  - Detection of transmitted unencrypted passwords by HACKERS!
  - Possibility for HACKERS to start a Man-In-The-Middle attack (Online-modification of transmitted data, e.g. setpoint values, parameters, ...).
- Using correctly configured routers (correct port limitations): Possibility of direct access to the Web server installed at the DIA.NE(r) WIN-server
  - No protection against web server directed viruses, worms, Denial of Service (DoS) and exploit attacks (e.g. Code Red)!
  - Little protection against password cracking attacks by HACKERS (Finding out of passwords)!
- Using mismanaged routers or using outdated router firmware (Security updates not installed): Direct access to the server's operating system
  - No protection against all sorts of viruses, worms, trojan and Denial of Service (DoS) attacks (e.g. Blaster, Sasser, Spybot, Beagle, ...)!
  - Password protection can be bypassed by HACKERS at all levels!
- No access control and access logging by the GE Jenbacher Remote Access Portal (dual Layer authentication)

GE Proprietary Information: CONFIDENTIAL! Use or disclosure of data contained on this sheet is subject to the restrictions on the cover or on the first page.

These serious security problems cause **direct danger for customer and plant**:

- Access to the plant using inappropriately obtained passwords or Man-In-The-Middle attacks by unauthorised persons:
  This means that such persons have full access to all setpoint values, plant parameters, historical data including modification and deletion.
- Take-over of full control of the server by unauthorised persons:
  - Bypassing all security restrictions provided by the operation system and consequently full access to all the application's setpoint values, plant parameters and historical data.
  - Unauthorised use of the server's hardware and the Internet connection for criminal activities (spam mailing, DoS attacks, ...).
- Damage to the DIA.NE® WIN server:
  Total loss of the server (data, accessibility, hardware) due to deletion of the server's hard disk by HACKER intervention or by a VIRUS.

These manipulations can cause catastrophic damage to the plant and can be life threatening!

3 Solution based on GE Jenbacher Firewall

To solve these problems, GE Jenbacher has developed a specific solution for accessing plants over Internet.

This solution uses an onsite Firewall to protect the plant which can handle a highly secured, encrypted connection to a central Firewall at GE Jenbacher (Virtual Private Network, VPN). These connections and all devices involved are directly controlled and maintained by GE Jenbacher specialists, who ensure a very fast response to system-based security problems (updates) or HACKER activities (proactive and reactive).

Using the firewall and VPN connections prevents the plant from being accessed directly. Only authenticated users gain access to the plant over GE Jenbacher Remote Access Portal.

GE Proprietary Information: CONFIDENTIAL! Use or disclosure of data contained on this sheet is subject to the restrictions on the cover or on the first page.

4 Warning

GE Jenbacher Firewall

STRICTLY PROHIBITED!

Unsafe

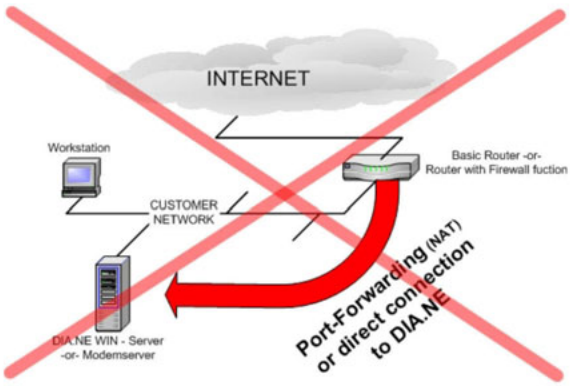

Safe

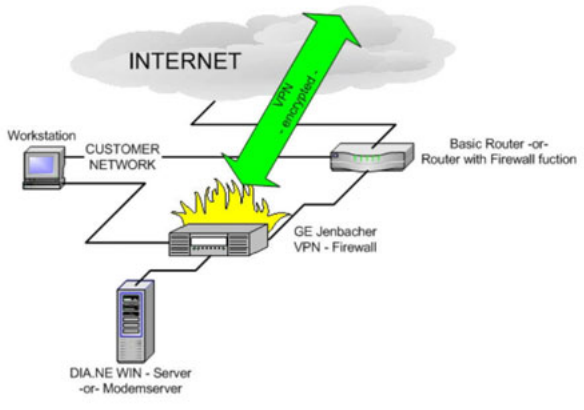

Router with port forwarding:
direct access to DIA.NE® WIN with unencrypted login via the DIA.NE® password.

GE Jenbacher **Firewall solution:**
access to DIA.NE® WIN only via GEJ Remote Access Portal (1. encrypted authentication at the portal, 2. encrypted login with the DIA.NE® password)

GE Jenbacher is not liable for any damage or defects resulting from port forwarding or direct connection to the GE Jenbacher DIA.NE® WIN server. Such damage or defects are not covered by the GE Jenbacher warranty.

GE Proprietary Information: CONFIDENTIAL! Use or disclosure of data contained on this sheet is subject to the restrictions on the cover or on the first page.

GE Proprietary Information: CONFIDENTIAL! Use or disclosure of data contained on this sheet is subject to the restrictions on the cover or on the first page.

STAMFORD®

Installation, Service & Maintenance Manual for P7 Range of AC Generators

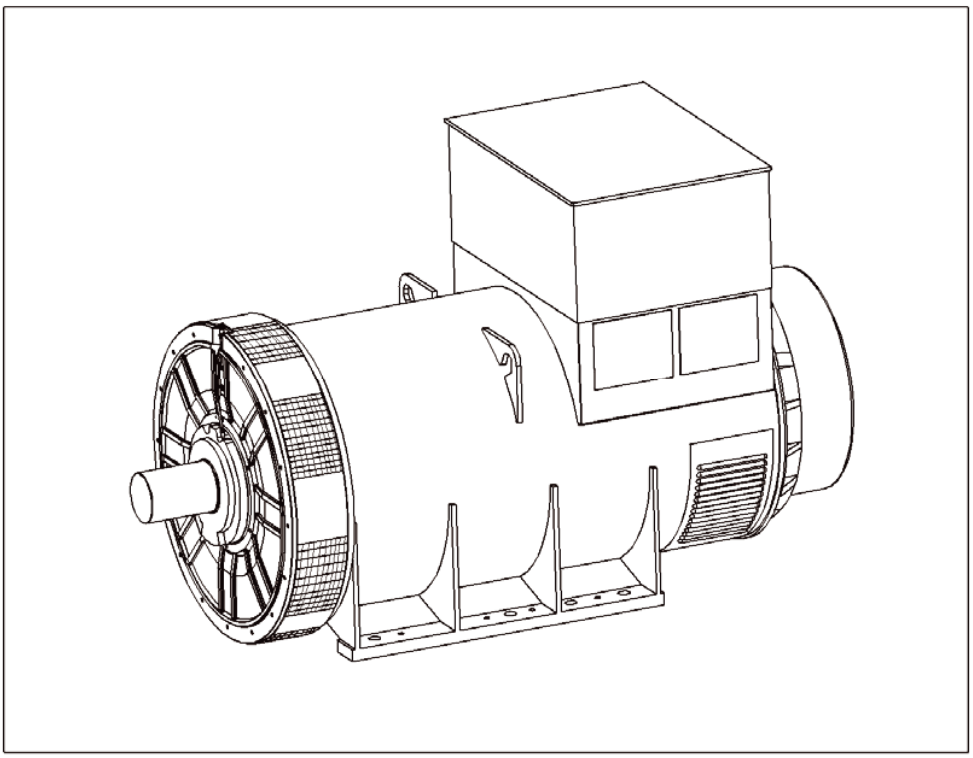

Safety Precautions

First Steps to Safe Operation
Read this manual, obey all Warnings and Cautions, and become familiar with the product.

Warnings & Notices used in this manual
The various warnings are out lined below and appear in the text in this format. Warnings and Cautions appear at the appropriate position in the, to which they refer.

> **Warning: Information that draws attention to the risk of injury or death.**

> **Caution: Information that draws attention to the risk of damage to the product, process or surroundings.**

> **Note: Used to convey or draw attention to, additional information or explanations.**

Notes appear after the text to which they refer.

Skill requirements of personnel
Service and maintenance procedures should only be carried out by experienced, qualified engineers, familiar with the procedures and the equipment. Before any intrusive procedures are carried out, ensure that the engine is inhibited and the generator is electrically isolated.

Electrical Equipment
All electrical equipment can be dangerous if not operated correctly. Always service and maintain the generator in accordance with this manual. Always use genuine 'STAMFORD' replacement parts.

> **Warning: Electrical shock can cause injury or death. Ensure that all personnel operating, servicing, maintaining or working near this equipment are fully aware of the emergency procedures in case of accidents.**

Before removing the protective covers to carry out service maintenance or repair, ensure that the engine is inhibited and the generator is electrically isolated. The AVR access covers are designed to be removed while the generator is on load.

Lifting
Lift the generator using the points provided with the aid of a spreader and chains. The angle on the chains must be vertical during the lift. Do not lift single bearing generators without the, securely fitted, transit bar. When removing the transit bar just prior to offering the generator up to the engine, be aware that the rotor is not securely held in the generator. Keep the generator in the horizontal plane to when the transit bar is not fitted.

> **Warning: The lifting points provided are designed for lifting the generator only. Do not lift the Generating Set by the generator's lifting points.**

Note: Due to our policy of continuous improvement, details in this manual which were correct at time of going to print and may now be due for amendment. Information included must therefore not be regarded as binding.

Note: The Front Cover drawing is representative of the range of generators. Several variations are available within this range that, are covered by this manual.

Foreword

The Manual

Before operating, the generating set read this manual and all additional documentation supplied with it. Great care has been taken with the design of this product to ensure that it is safe to operate. Misuse and the failure to follow the safety precautions contained in the manual are potential causes of accidents.

Read the manual and make sure that all personnel who work on the equipment have access to the manual. The manual should be considered as part of the product and should remain with the product. Make sure that the manual is available to all users throughout the life of the product.

Scope

This manual contains guidance and instructions for the Installation, Servicing and Maintenance of the generator.
It is not possible, within the scope of the manual, to teach the basic electrical and mechanical skills required to safely carry out the procedures enclosed. The manual is written for skilled electrical and mechanical technicians and engineers, who have prior knowledge and experience of generating equipment of this type.
We offer a range of training courses that cover all aspects of STAMFORD generators.

Generator Designation

P I 7 3 4 C 2 (example)		
P	-	Generator type
I	-	Applications, I = Industrial, M = Marine.
7	-	Frame size
3	-	Separate excitation, PMG
4	-	Number of poles, 4 or 6
C	-	Core Size
2	-	Number of bearings, 1 or 2

The Product

The product is an AVR controlled, separately excited (by a shaft driven pilot exciter) synchronous ‘ac generator’. Designed for incorporation into a generating-set. (A generating-set is defined as ‘machinery’ in European directives).

Serial Number Location

Each generator has a unique serial number stamped into the upper section of the drive end of the frame.
The serial number is also shown on the nameplate.

Two other labels are located inside the terminal box, both fixed inside of the terminal box, one on the sheet metal-work and the other on the main frame of the generator. Neither of these two labels is considered to be permanently fixed.

Rating Plate

The generator has been supplied with a self-adhesive rating plate label to enable fitting after final assembly and painting. Stick the nameplate to the outside of the non-drive end of the terminal box. The surface in the area where a label is to be stuck must be flat, clean, and any paint finish must be fully dry before attempting to attach label. Recommended method for attaching label is peel and fold back sufficient of the backing paper to expose some 20 mm of label adhesive along the edge which is to be located against the sheet metal protrusions. Once this first section of label has been carefully located and stuck into position progressively peel off the backing paper and smooth down with a clean cloth. The adhesive will achieve a permanent bond in 24 hours.
A factory fitted metal nameplate is available for some applications.

Caution. Do not exceed the parameters marked on the rating plate.

Contents

SAFETY PRECAUTIONS **2**
- First Steps to Safe Operation 2
- Warnings & Notices used in this manual 2
- Skill requirements of personnel 2
- Electrical Equipment 2
- Lifting 2

FOREWORD **3**
- The Manual 3
- Scope 3
- Generator Designation 3
- The Product 3
- Serial Number Location 3
- Rating Plate 3

CONTENTS **4**

INTRODUCTION **8**
- General Description 8
  - MX341 AVR 8
  - MX321 AVR 8
- Standards. 8
- European Directives. 9
  - Applications for use within the EU 9
  - Unsuitable Applications 9
  - Additional information for EMC compliance 10

APPLICATION OF THE GENERATOR **11**
- Environmental Protection 11
  - Air Flow 11
- Airborne Contaminates 11
  - Air Filters 11
- High Humidity environments 11
  - Anti-condensation heaters 11
  - Enclosures 11
- Vibration 11
  - Definition of BS5000 – 3 12
  - Definition of ISO 8528 - 9 12
  - Vibration Monitoring 12
  - Excessive Vibration levels 12
- Bearings 12
  - Re-greasable Bearings 12
  - Bearing Life 13
  - Health Monitoring of the Bearings 13
  - Bearing 'Service Life' Expectancy 13

INSTALLATION INTO THE GENERATING SET **14**
- Delivery 14
- Handling the generator 14
- Storage 14
- After Storage 14
- Rotor balancing 14
- Generator Vibration, Frequency 14
- Coupling arrangements 15
  - Coupling Two Bearing Generators 15
  - Coupling Single Bearing Generators 15
  - Single Bearing Coupling Alignment 15
- Earth arrangement 16
- Paint Finish 16

WARNING LABELS 16
PRE-RUNNING CHECKS 16
Insulation resistance test 17
DIRECTION OF ROTATION 17
PHASE ROTATION 17
VOLTAGE AND FREQUENCY 17
AVR ADJUSTMENT 17
ACCESSORIES 17
INSTALLATION, ON SITE 18
GENERAL 18
CUSTOMER CABLE ENTRY 18
EARTH CONNECTIONS 18
ELECTRICAL PROTECTION 18
VOLTAGE SURGES AND MICRO- INTERRUPTIONS. 18
SYNCHRONISATION NOTES 19
AUTOMATIC VOLTAGE REGULATOR TYPE MX341 20
INITIAL CHECKS 20
INITIAL START UP 20
Voltage Set Up 20
Stability Set Up 20
AVR ADJUSTMENTS 20
UNDER FREQUENCY ROLL OFF (UFRO) 21
EXC TRIP (Excitation Trip) 21
Transient Load Switching 21
DIP. 21
SUMMARY OF CONTROLS, MX341 22
AUTOMATIC VOLTAGE REGULATOR TYPE MX321 23
INITIAL CHECKS 23
INITIAL START UP 23
Voltage Set Up 23
Stability Set Up 23
• RAMP ADJUSTMENT 24
AVR ADJUSTMENTS 24
UNDER FREQUENCY ROLL OFF (UFRO) 24
EXC TRIP (Excitation Trip) 24
OVER/V (Over Voltage) 25
Transient Load Switching 25
DIP. 25
DWELL 25
OVERVOLTAGE DE-EXCITATION CIRCUIT BREAKER 25
Resetting The Excitation Breaker 26
CURRENT LIMITING 26
Setting Procedure 26
SUMMARY OF CONTROLS, MX321 26
FAULT FINDING, MX321 & MX341 AVRS 28
SEPARATE EXCITATION TEST PROCEDURE 28
Checking the Permanent Magnet Generator (PMG). 28
Checking Generator Windings and Rotating Diodes 28
Balanced Main Terminal Voltages 29
Check Rectifier Diodes 29
Replacement of Faulty Diodes 29
Surge Suppressor 29
Main Excitation Windings 29
Unbalanced Main Terminal Voltages 29
EXCITATION CONTROL TEST 30
AVR Function Test 30
ACCESSORIES 31

Remote Voltage Adjustment. 31
PARALLEL OPERATION 31
Load Sharing 31
Droop 31
Droop Setting Procedure 32
MANUAL VOLTAGE REGULATOR (MVR) 33
POWER FACTOR CONTROLLER (PFC3) 33
SERVICE 34
WINDING CONDITION 34
New Machines 34
At Generating Set Assembler's Works 34
Generators in Service 34
Winding Condition Assessment 34
PROCEDURE FOR INSULATION TESTING 35
METHODS OF DRYING OUT GENERATORS 35
Cold Run 35
Blown Air Drying 35
Short Circuit Method 35
TYPICAL DRYING OUT CURVE 36
AIR FILTERS 37
Air Filter Cleaning Procedure 37
MAINTENANCE 38
ANTI-CONDENSATION HEATERS 38
REMOVAL OF PERMANENT MAGNET GENERATOR (PMG) 38
Re-assembly 38
REMOVAL OF BEARINGS 38
REMOVAL OF THE NON DRIVE END BEARING. 38
DRIVE END BEARING REMOVAL 39
REMOVAL OF THE MAIN ROTOR 39
REFITTING BEARINGS 40
Equipment 40
Preparation 40
Bearing preparation 40
Bearing Cartridge 40
Assemble Bearing into Cartridge 40
Assemble Bearing onto Shaft 40
BEARING CAP & FLINGER 41
Re-lubrication pipe 41
Returning To Service 41
BEARING MAINTENANCE 41
Re-lubrication 41
PARTS IDENTIFICATION 42
SINGLE BEARING GENERATOR 42
TWO BEARING GENERATOR. 43
SPARES AND AFTER SALES SERVICE 44
RECOMMENDED SPARES 44
AFTER SALES SERVICE 44
KLUBER ASONIC GHY72 GREASE 44
TECHNICAL DATA 45
Air Flow requirements 45
Winding Resistances 45
Main Stator Winding Resistances 45
Coupling disc Torque setting 46
Bending Moments 46
Customer output cables 46
Generator internal connections. 46
Re-lubrication Details for Regreasable Bearings 46

Initial fill for Regreasable Bearings 46
Generator Weight 46
Recommended Service Parts 47
Sealed for life Bearing kit Numbers 47
Regreasable Bearings Kit Numbers 47
A.C. GENERATOR WARRANTY **48**
WARRANTY PERIOD 48
Defects, After Delivery 48
EXTENSIONS TO THE WARRANTY PERIOD 48
END OF LIFE DISPOSAL **49**
RECYCLABLE MATERIAL 49
ITEMS REQUIRING SPECIALIST TREATMENT. 49
WASTE MATERIAL 49

Introduction

General Description

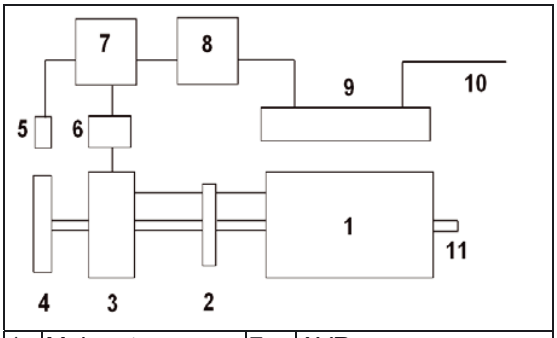

1	Main rotor	7	AVR
2	Rotating diodes	8	Isolating transformer (if fitted)
3	Exciter rotor		
4	PMG rotor	9	Main stator
5	PMG stator	10	Output
6	Exciter stator	11	Shaft

The Permanent Magnet Generator (PMG) provides power for the excitation of the exciter field via the Automatic Voltage Regulator (AVR) which is the controlling device governing the level of excitation provided to the exciter field. The AVR responds to a voltage-sensing signal derived, via an isolating transformer, from the main stator winding. By controlling the low power of the exciter field, control of the high power requirement of the main field is achieved through the rectified output of the exciter armature.

MX341 AVR
The Automatic Voltage Regulator (AVR) is of the thyristor type and forms part of the excitation system for a brushless generator. In addition to regulating the generator voltage, the AVR circuitry includes protective features to ensure safe reliable control of the generator. Excitation power is derived from a permanent magnet generator (PMG) to guarantee low Radio Frequency Interference (RFI) and immunity from thyristor type loads. The AVR is linked with the main stator windings and controls the power fed to the exciter stator and hence the main rotor to maintain the machine output voltage within the specified limits, compensating for load, speed, temperature and power factor of the generator. Soft start circuitry is included to provide a smooth controlled build up of generator output voltage.

A frequency measuring circuit continually monitors the generator output and provides underspeed protection of the excitation system by reducing the generator output voltage proportionally with speed below an adjustable pre-set threshold. A further enhancement of this feature is an adjustable volts/Hz slope to improve frequency recovery time on turbo charged engines.
Uncontrolled over excitation is limited to a safe period by internal shutdown of the AVR output device. This condition remains latched until the generator has been stopped. For complete protection, a circuit breaker option is available providing circuit isolation in event of a short circuit power device. In addition it detects engine speed and provides adjustable voltage fall off with speed, below a pre-selected speed (Hz) setting, preventing over-excitation at low engine speeds and softening the effect of load switching to relieve the burden on the engine. It also provides over-excitation protection that acts following a time delay, to de-excite the generator in the event of excessive exciter field voltage.
Provision is made for the connection of a remote voltage trimmer allowing the user fine control of the generator's output. Accessories are available for this AVR. Please refer to factory for further details.

MX321 AVR
In addition to the above the MX321 AVR has 3 phase rms sensing for improved regulation plus:

- Over-voltage protection.
- Adjustable recovery on underspeed protection
- Current limiting may be included to allow control over the amount of short circuit current flowing during three phase and single phase short circuits on the generator output. An additional current transformer is required.

Standards.
STAMFORD ac generators meet the relevant parts of national and international standards pertaining to generators. The generator must be operated within the limits laid down in the relevant standards and within the parameters on the generator rating plate.

Marine generators meet the requirements of all the major marine classification societies.

European Directives.

AC generators sold for use in the European Union must meet the relevant European directives. An ac generator has no intrinsic function; it must be have a mechanic input in order to provide an electrical output. The generator is supplied as a component part of a Generating-Set. To reflect this each generator is supplied with an 'EC Declaration of Incorporation' in accordance the Machinery Directive.

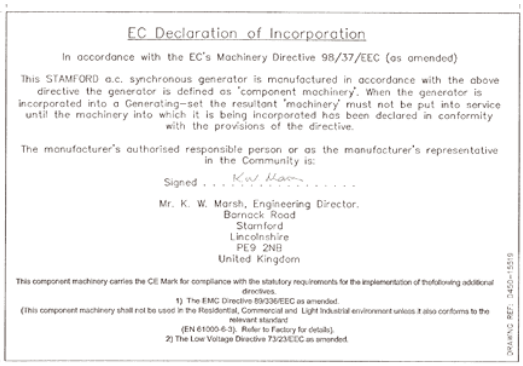

EC Declaration of Incorporation

In accordance with the EC's Machinery Directive 98/37/EEC (as amended)

This STAMFORD a.c. synchronous generator is manufactured in accordance with the above directive the generator is defined as 'component machinery'. When the generator is incorporated into a Generating–set the resultant 'machinery' must not be put into service until the machinery into which it is being incorporated has been declared in conformity with the provisions of the directive.

The manufacturer's authorised responsible person or as the manufacturer's representative in the Community is:

Signed . . . . . .

Mr. K. W. Marsh, Engineering Director.
Barnack Road
Stamford
Lincolnshire
PE9 2NB
United Kingdom

This component machinery carries the CE Mark for compliance with the statutory requirements for the implementation of thefollowing additional directives.
1) The EMC Directive 89/336/EEC as amended.
(this component machinery shall not be used in the Residential, Commercial and Light Industrial environment unless it also conforms to the relevant standard
(EN 61000-6-3). Refer to Factory for details).
2) The Low Voltage Directive 73/23/EEC as amended.

DRAWING REF: 04250-13519

The ac generator meets the relevant directives applicable to an ac generator (component part) before it is incorporated into 'machinery'.

The directives identified as pertaining to ac generators are:

- The Machinery (Safety) Directive, 98/37/EEC.
- The Low Voltage Directive, 73/23/EEC.
- The EMC Directive, 89/336/EEC

The generator is CE marked; CE labels are supplied loose in case the generating set manufacturer needs to paint the generating set before delivery to the end user.

> **Note: Once the generator is build into a generating-set (machinery), it is the responsibility of the generating-set manufacture to ensure that the generating-set complies with the relevant EC Directives.**

It is contrary to the EC Directives to misrepresent compliance of the EC directives by displaying the CE mark supplied with a component part of the product. The directive requires compliance to be assessed as a component part, as the complete product and during installation on site.

Applications for use within the EU

STAMFORD ac generators are supplied on the basis that:

- They are used for power generation or related functions.
- They are to be applied in one of the following environments:
  Portable (open construction – temporary site supply)
  Portable (enclosed – temporary site supply)
  Containerised (temporary or permanent site supply)
  Ship – borne, below decks (marine auxiliary power)
  Commercial vehicle (road transport / refrigeration etc.)
  Road transport (auxiliary power)
  Industrial vehicle (earthmoving, cranes etc.)
  Fixed installation (Industrial – factory / process plant)
  Fixed installation (residential, commercial and light industrial – home / office / health.)
  Energy management (combined heat & power and/or peak lopping.)
  Alternative energy schemes.
- The standard generators are designed to meet the 'industrial' emissions and immunity standards. Where the generator is required to meet the residential, commercial and light industrial emissions and immunity standards reference must be made to document reference N4/X/011. This publication outlines the additional equipment that may be required.
- The installation 'earth/ground' arrangements require the connection of the generator frame to the site protective earth conductor using a minimum lead length.
- Maintenance and servicing with unauthorised parts, not of supply, will invalidate us from any liability for EMC compliance.
- Installation, maintenance and servicing are carried out by adequately trained personnel fully aware of the requirements of the relevant EC directives.

Unsuitable Applications

Synchronous generators require a constant speed for power generation. Applications where the generator is not run at a constant speed are not suitable for the standard generator. Such applications may be possible within certain parameters. Contact the factory for advice, there is every possibility that we can provide you with a satisfactory technical solution to meet your requirement.

Additional information for EMC compliance

Standard generators are designed to meet the ‘industrial’ emissions and immunity standards. Where the generator is required to meet the residential, commercial and light industrial emissions and immunity standards, reference must be made to document reference N4/X/011. This publication outlines the additional equipment that may be required.

Application of the generator

Environmental Protection

Stamford generators are protected to IP23. IP23 is not adequate protection for use outdoors without additional measures.

Ambient Temperature	<40°C
Humidity	<60%
Altitude	<1000m

This table represents the normal operating conditions that the generator is designed for. Operation outside of these parameters is possible after due consideration and will be reflected on the generator nameplate. If the operating environment for the generator has changed after purchase, the rating of the generator needs to be revised, refer to the factory for details.

Air Flow

The air flow requirements for the generator can be found in the Data section at the back of this manual. Ensure that the air inlets and outlets are not obstructed when the generator is running.

Airborne Contaminates

Contaminates such as salt, oil, exhaust fumes, chemicals, dust, sand, etc., will reduce the effectiveness of the insulation and lead to premature failure of the windings. Consider using air filters or an enclosure to protect the generator.

Air Filters

Air filters are available on request. Filters present a restriction to the airflow so the rating of the generator must be reduced by 5%. If the filters are supplied, factory fitted, the rating on the nameplate will include the reduced rating. The filters can be up-fitted after delivery in which case the customer must apply the power reduction.
Air filters remove airborne particulates above 3 microns. The frequency of changing and cleaning the filters depend on the site conditions. We recommend that the filters are monitored frequently until a suitable cycle of change is established.
Air filters do not remove water. Additional protection must be employed to prevent the filters from getting wet. If the filters are allowed to get wet the airflow will be restricted and the generator will overheat. This will reduce the life expectancy of the insulation leading to premature failure of the generator.

High Humidity environments

The humidity of the air will allow condensation to form on the windings if the temperature of the windings falls below the dew point. The dew point is a relationship between the ambient temperature and humidity. In areas of high humidity additional protection may be required even if the generator is fitted inside an enclosure.

Anti-condensation heaters

Anti-condensation heaters are designed to raise the temperature of the windings above the temperature of the surrounding material so that the condensation will not form on the windings.
We recommend that anti-condensation heaters are fitted to all generators that are left switched off for any period of time. The best practice is to wire the heaters such that the heaters come on when the generator is switched off. This is particularly important in applications where high humidity is a significant problem. Always check the condition of the generators windings before switching the generator on. If moisture is observed carry out one or more of the drying-out methods outlined in the Service section of this manual.

Enclosures

An enclosure should be employed to protect the generator from adverse environmental conditions.
If the generator is to be fitted inside an enclosure, ensure that there is adequate airflow to support both the engine and the generator. Ensure that the generator air supply is clean (free from moisture and contaminates) and at or below the ambient temperature stated on the rating plate.

Vibration

STAMFORD generators are designed to withstand the vibration levels encountered on generating sets built to meet the requirements of ISO 8528-9 and BS 5000-3. (Where ISO 8528 is taken to be broad band measurements and BS5000 refers to the predominant frequency of any vibrations on the generating set).

Definition of BS5000 – 3
Generators shall be capable of continuously withstanding linear vibration levels with amplitudes of 0.25mm between 5Hz and 8Hz and velocities of 9.0mm/s rms between 8 Hz and 200 Hz, when measured at any point directly on the carcass or main frame of the machine. These limits refer only to the predominant frequency of vibration of any complex waveform.

Definition of ISO 8528 - 9
ISO 8528-9 refers to a broad band of frequencies; the broad band is taken to be between 2 Hertz and 300 Hertz. The table below is an example from ISO 8528 - 9 (value 1). This simplified table lists the vibration limits by kVA and speed for acceptable genset operation.

Vibration Levels As Measured On The Generator				
Engine Speed Min -[1]	Set Output Kva	Vibration Displacement (*S rms*)	Vibration Velocity (*V rms*)	Vibration Acceleration (*a rms*)
1500 – 1800 (rpm)	>250 kVA	0.32 mm	20 mm/sec	13 m/sec[2]
The 'Broad band' is taken as 2 Hz - 300 Hz				

Caution: Exceeding either of the above specifications will have a detrimental effect on the life of the bearings and other components. This will invalidate the generator warranty. If you are in any doubt, contact the factory.

Vibration Monitoring
We recommends that the set builder checks the vibration levels using vibration analysing equipment. Ensure that the vibration levels of the generating set are within the levels stated in BS 5000-3 and ISO 8528-9. If the vibration levels are not within tolerance the genset builder should investigate the root cause of the vibrations and eliminate them. The 'best practice' is for the genset builder to take initial readings as a base line and the user to periodically monitor the genset and bearings to detect any deteriorating trend. It will then be possible to plan ahead for bearing changes and eliminate vibration problems before excessive damage to the generating set occurs.
Vibration checks should be made every 3 months.

Excessive Vibration levels
If the vibration levels of the generating set are not within the parameters quoted above:

- Consult the genset builder; the genset builder should address the genset design to reduce the vibration levels as much as possible.
- Discuss, with your supplier, the impact of not meeting the above levels on both bearing and generator life expectancy.
- When requested, or it is deemed necessary, We will work with the genset builder in an attempt to find a satisfactory solution.

Bearings
Sealed for life or re-greasable bearings are fitted to the P range of generators. The bearings are fitted within machined housings, these housings form an assembly located and bolted, within the end brackets. All of the have bearings have pressed steel cages and are type C3. The grease used is a high specification synthetic compound that must not be mixed with grease with a different specification.

Re-greasable Bearings
When re-greasable bearings are fitted the bearing housings incorporate fittings for pipework to an external grease nipple. Generators with re-greasable bearings are supplied with information labels advising the user of grease type, re-lubrication frequency, and the quality of grease to be used. These instructions must be followed. The information is repeated in the Data section of this manual. The bearing housing has a grease escapement slot at the bottom of the outer area. At the drive end the grease, expelled from the escapement slot, will discharge into the coupling area. At the non-drive end the grease, from escapement slot, is deflected by a metal plate to ensure that it cannot foul the Permanent Magnet

Generator (PMG). The sheet metal cover over the PMG has a slot at the bottom to enable the excess grease to escape.

Bearing Life
Factors that effect bearing life:
The life of a bearing in service is subject to the working conditions and the environment:

- High levels of vibration from the engine or misalignment of the set will stress the bearing and reduce its service life. If the vibration limits set out in BS 5000-3 and ISO 8528-9 are exceeded bearing life will be reduced. Refer to 'Vibration' below.
- Long stationary periods in an environment where the generator is subject to vibration can cause false brinnelling, which puts flats on the balls and grooves on the races, leading to premature failure.
- Very humid atmospheric or wet conditions can emulsify the grease causing corrosion and deterioration of the grease, leading to premature failure of the bearings.

Health Monitoring of the Bearings
We recommend that the user check the bearing condition, using monitoring equipment, to determine the state of the bearings. The 'best practice' is to take initial readings as a base line and periodically monitor the bearings to detect a deteriorating trend. It will then be possible to plan a bearing change at an appropriate generating set or engine service interval.

Bearing 'Service Life' Expectancy
Bearing manufacturers recognise that the "service life" of their bearings is dependent upon many factors that are not in their control; they cannot therefore quote a "service life".

Although "service life" cannot be guaranteed, it can be maximised by attention to the generating set design. An understanding of the generating set's application will also help the user to maximise the service life expectancy of the bearings. Particular attention should be paid to the alignment, reduction of vibration levels, environmental protection, maintenance and monitoring procedures.

We do not quote life expectancy figures for bearings, but suggest practicable replacement intervals based on the L10 life of the bearing, the type of grease and the recommendations of the bearing and grease manufacturers.

For general-purpose applications: providing the correct maintenance is carried out, vibration levels do not exceed the levels stated in ISO 8528-9 and BS5000-3, and the ambient temperature does not exceed 50°C. Plan to replace re-greaseable bearing within 40,000 hours and sealed for life bearing within 30,000 hours of operation. (This estimate is based on the use of Kluber Asonic GHY 72 grease only.) (In theory any grease with an equivalent specification would achieved a similar performance).

It is important to note that bearings in service, under good operating conditions, can continue to run beyond the recommended replacement period. It should also be remembered that the risk of bearing failure increases with time.

If in doubt about any aspect of the 'bearing life' on STAMFORD, contact your nearest distributor or contact the Stamford factory direct.

Installation into the Generating Set

The generator is supplied as a component part for installation into a ‘generating set’.

Delivery
Upon receipt of the generator, check the generator for damage that may have occurred during transport. Also check that the rating-plate details are correct and as ordered for the application.

Handling the generator
When lifting the generator use a spreader bar to ensure that the angle on the lifting chains are vertical to the lifting position on the generator.

Warning: The generator lifting points are designed to lift the generator only. Do not lift the complete generating set by the generator lifting points.

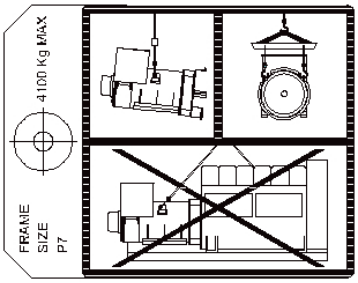

Single bearing generators have a transit bar fitted at the drive end. This bar holds the rotor in position during transit. The transit bar should be left in position until it is necessary to remove it to allow the generator to be coupled to the engine.

Warning: If the generator is moved without the transit bar be aware that the rotor could fall out of the frame. When moving the generator always keep it in the horizontal plane, this will reduce the risk of the rotor falling out.

Storage
If the generator is not to be used immediately, it must be stored in a clean, dry, vibration free environment. If anti-condensation heaters are fitted, switch them on. If heaters are not fitted use other means to ensure that condensation cannot form on the windings.
Spin the shaft by hand every month to prevent flat spots in the bearings and to free up the grease.

After Storage
After a period of storage, carry out ‘pre running checks’ to determine the condition of the windings. If the winding are damp or the insulation is low, follow one of the ‘drying out procedures’, in the Service section of this manual. If the generator has re-greasable bearings and has been in storage for 6 months or more, re-lubricate the bearings before use. If the bearings are sealed for life, replace the bearing after 12 months in storage. (see the Maintenance section)

Rotor balancing
Dynamic balancing of the generator rotor assembly has been carried out during manufacture in accordance with BS 6861 Part 1 Grade 2.5 to ensure vibration limits of the generator are in accordance with BS 4999 Part 142.

Generator Vibration, Frequency
The main vibration frequencies produced by the component generator are as follows:

1500 rpm	25 Hz
1800 rpm	30 Hz

However, vibrations induced by the engine are complex and contain frequencies of 1.5, 3, 5 or more times the fundamental frequency of vibration. These induced vibrations can result in generator vibration levels higher than those derived from the generator itself. It is the responsibility of the generating set

designer to ensure that the alignment and stiffness of the bedplate and mountings are such that the vibration limits of BS5000 part 3 and ISO 8528 part 9 are not exceeded.
In standby applications where the running time is limited and reduced life expectancy is accepted, higher levels than specified in BS5000 part 3 can be tolerated, up to a maximum of 18mm/sec.

Coupling arrangements
Single and two bearing arrangements are available both arrangements can be close coupled. Both arrangements also need a firm level foundation.

Two bearing generators require a substantial bedplate with engine/generator mounting pads to ensure a good base for accurate alignment. Close coupling of the engine to the generator can increase the overall rigidity of the set. A flexible coupling, designed to suit the specific engine/generator combination, is recommended to minimise the torsional effects.

Accurate alignment of single bearing generators is essential, vibration can occur due to the flexing of the flanges between the engine and generator. A substantial bedplate with engine/generator mounting pads is required.

For the purposes of establishing set design the bending moment at the engine flywheel housing to generator adaptor interface should not exceed 275 kgm. (2000ft.lbs.)

The maximum bending moment of the engine flange must be checked with the engine manufacturer.

Torsional vibrations occur in all engine-driven shaft systems and may be of a magnitude to cause damage at certain critical speeds. It is therefore necessary to consider the torsional vibration effect on the generator shaft and couplings.

It is the responsibility of the generator set manufacturer to ensure compatibility, and for this purpose drawings showing the shaft dimensions and rotor inertias are available for customers to forward to the engine supplier. In the case of single bearing generators coupling details are included.

Caution: Torsional incompatibility and/or excessive vibration levels can cause damage or failure of the generator and/or engine components.

Coupling Two Bearing Generators
A flexible coupling should be fitted and aligned in accordance with the coupling manufacturer's instruction.
If a close coupling adaptor is used the alignment of machined faces must be checked by offering the generator up to the engine. Shim the generator feet if necessary. Ensure adaptor guards are fitted after generator/engine assembly is complete. Open coupled sets require a suitable guard, to be provided by the set builder.
Axial loading of the generator bearings should be avoided. Should it be unavoidable contact the factory for advice.

Warning: Incorrect guarding and/or generator alignment can result in injury and/or equipment damage.

Coupling Single Bearing Generators
Alignment of single bearing generators is critical. If necessary, shim the generator feet to ensure alignment of the machined surfaces.
For transit and storage purposes the generator frame spigot and rotor coupling plates have been coated with a rust preventative. This MUST BE removed before assembly to engine.
A practical method for removal of this coating is to clean the mating surface areas with a de-greasing agent based on a petroleum solvent.

Warning: Care should be taken not to allow any cleaning agent to come into prolonged contact with skin.

Single Bearing Coupling Alignment
1. On the engine check the distance from the coupling mating face on the flywheel to the flywheel

housing mating face. This should be within 0.5mm of nominal dimension. This is necessary to ensure that a thrust is not applied to the ac generator bearing or engine bearing.

2. Check that the bolts securing the flexible plates to the coupling hub are tight and locked into position. Refer to the Data section of the manual for tightening torques.
3. Remove air outlet covers from the drive end of the generator to gain access to coupling and adaptor bolts. Check that coupling joint interfaces are clean and lubricant free.
4. Check that coupling discs are concentric with adaptor spigot. This can be adjusted by the use of tapered wooden wedges between the fan and adaptor. Alternatively the rotor can be suspended by means of a rope sling through the adaptor opening.
5. Consider using alignment studs to ensure that the disc and the flywheel are in alignment.
6. Offer the generator to engine and engage both coupling discs and housing spigots at the same time, pushing generator towards engine until coupling discs are against flywheel face, and the housing spigots are located.

   Caution: Do not pull the generator to the engine using bolts through the flexible discs.

7. Fit housing and coupling bolts taking care to use heavy gauge washers between coupling bolt head and coupling disc. Tighten bolts evenly around assembly sufficiently to ensure correct alignment.
8. Tighten housing bolts.
9. Tighten coupling disc to flywheel bolts. Refer to engine manufacturer's manual for correct tightening torque.
10. Remove rotor aligning aids, the sling, or wooden wedges and replace all covers.

Caution: Incorrect generator alignment can result in damage to the generator.

Warning: Failure to replace protective covers can result in injury.

Earth arrangement

The generator frame should be solidly bonded to the generating set bedplate. If anti-vibration mounts are fitted between the generator frame and its bedplate a suitably rated earth conductor (normally one half of the cross sectional area of the main line cables) should bridge across the anti-vibration mounts.

Warning: Refer to local regulations to ensure that the correct earth requirements are incorporated in the installation. Inadequate earth installations put lives at risk.

Paint Finish

Unless previous arrangements have been agreed, the generator will be supplied in a water based primer coat. It is expected that the generating set assembler will want to paint the generating set with a final coat in their company livery.

Note: The primer coat is not adequate protection for many applications without additional protection.

Warning labels

As we expect the set builder to paint the generator in his own livery we supply the warning labels loose. The labels can be found in a wallet attached to the generator together with this manual.

Use the labels as per the instructions printed on the reverse of the labels.

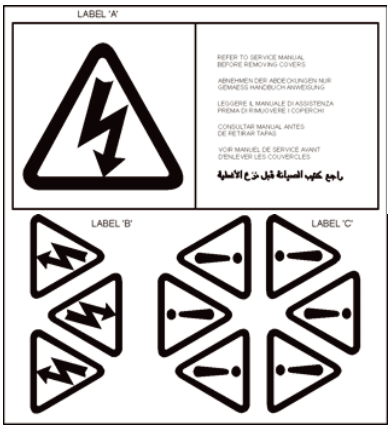

Pre-Running Checks

Before starting the generating set.

- Test the insulation resistance of windings.

- Check all connections are in the correct location and tight
- Check the generator air path is clear of obstructions
- Replace all covers.

Insulation resistance test
The AVR should be disconnected during this test.
A 500V Megger or similar instrument should be used. Disconnect any earth conductor connected between neutral and earth and megger an output lead terminal U, V or W to earth. The insulation resistance reading should be in excess of 5 Megohm to earth. Should the insulation resistance be less than 5 Megohm the winding must be dried out. See the Service section of this Manual.

> **Caution: The windings have been H.V. tested during manufacture and further H.V. testing may degrade the insulation with consequent reduction in operating life. Should it be necessary to demonstrate H.V. testing, for customer acceptance, the tests must be carried out at reduced voltage levels i.e.**
>
> **Test Voltage= 0.8 (2 X Rated Voltage + 1000)**

Direction of Rotation
The direction of rotation of the generator is designed to be clockwise as viewed from the drive end of the generator.

Phase Rotation
The output from the generator will have a phase sequence of U V W with the generator running clockwise as viewed from the drive end. If the phase rotation of the generator has to be reversed the customer must rearrange the output cables to a UVW configuration. Ask for a circuit diagram of ‘reverse phase connections’.

Voltage and Frequency
Check that the voltage and frequency levels required for the generating set application are as indicated on the generator nameplate.

AVR adjustment
To make AVR selections and adjustments remove the AVR cover. Use the tool provided to make adjustments to the AVR settings. The AVR is factory set and will give satisfactory performance during initial running tests. Subsequent voltage adjustment both on and off load may be required. Guidance can be found in the section for the relevant AVR.

Accessories
If there are accessories for control panel mounting supplied with the generator refer to the specific accessory fitting procedures inserted inside the back cover of this book.

Installation, On Site

General
The extent of site installation will depend upon the generating set build, e.g. if the generator is installed in a canopied set with integral switchboards and circuit breaker, on site installation will be limited to connecting up the site load to the generating set output terminals. In this case reference should be made to the generating set manufacturer's instruction book and any pertinent local regulations.

If the generator has been installed on a set without switchboard or circuit breaker the following points relating to connecting up the generator should be noted.

Customer cable entry
The terminal box can accept cable entry from either side. Both panels are removable for drilling/punching to suit glands/or gland boxes. If single core cables are taken through the terminal box side panel a non-magnetic gland plate should be fitted.

> **Caution: To avoid the possibility of debris entering the generator, remove the panel before drilling.**

Incoming cables should be supported from either below or above the box level and at a sufficient distance from the centre line of the generating set so as to avoid a tight radius at the point of entry into the terminal box panel, and allow movement of the generator set on its anti-vibration mountings without excessive stress on the cable.

Before making final connections, test the insulation resistance of the windings.
A 500V Megger or similar instrument should be used. Should the insulation resistance be less than 5.0 Megohm the windings must be dried out as detailed in the Service section of this manual.

Clean the mating surfaces and lightly abrade the mating surfaces, do not score the surface. The current carrying surfaces must connect face to face.

Earth Connections
The neutral of the generator is not bonded to the generator frame when it is supplied from the factory. An earth terminal is provided inside the terminal box adjacent to the main terminals. Should it be required to operate with the neutral earthed a substantial earth conductor (normally equivalent to one half of the section of the line conductors) must be connected between the neutral and the earth terminal provided inside the terminal box. It is the responsibility of the generating set builder to ensure the generating set bedplate and generator frame are all bonded to the main earth terminal in the terminal box.

> **Caution: Reference should be made to local rules and regulations concerning earth requirements and ensure they are followed.**

Electrical Protection
It is the responsibility of the end user and his contractors/sub-contractors to ensure that the overall system protection meets the needs of any inspectorate, local electricity authority or safety rules, pertaining to the site location.
To enable the system designer to achieve the necessary protection and/or discrimination, fault current curves are available on request from the factory, together with generator reactance values to enable fault current calculations to be made.

> **Warning: Incorrect installation and/or protective systems can result in injury and/or equipment damage. Installers must be qualified to perform electrical installation work.**

Adequate electrical protection should be provided so that there will be no danger to personnel, danger of fire or damage to the generator under fault conditions.

Voltage Surges and Micro- Interruptions.

Precautions should be taken to prevent transient voltages generated by the connected load and/or the distribution system from causing damage to the generator components.

To identify any possible risk, all aspects of the generator's proposed application should be considered, especially the following:-

- Loads with characteristics that result in large load step changes.
- Load control by Switchgear, and power control by any method likely to generate transient voltage spikes.
- Distribution systems susceptible to external influences, such as overhead lines and lightning strikes.
- Applications involving parallel operation to a mains supply, where the risk of a mains disturbance in the form of a micro-interruption could occur.

If the generator is at risk of voltage surges or micro-interruptions adequate protection must be incorporated into the generation system. This is normally in the form of surge arrestors and suppressors.

Synchronisation notes

- The synchronising switch/breaker should be of a type that will not cause "contact bounce" when it operates.
- The synchronising switch/breaker should be adequately rated to withstand the continuous full load current of the generator.
- The switch/breaker should be able to withstanding the rigorous closing cycles during synchronising and the currents produced if the generator is parallel out of synchronism.
- The closing time of the synchronising switch/breaker should be under the control of the synchroniser settings.
- The switch/breaker should be capable of operation under fault conditions such as short circuits. Generator data sheets are available to help calculate this level.

Note: The fault level may include a contribution from other generators as well as from the grid/mains utility.

- The method of synchronising should be either automatic, or by check synchronising. The use of manual synchronising is not recommended.
- The settings on the synchronising equipment should be such that the generator will close smoothly.

Voltage difference	+/- 0.5%
Frequency difference	0.1 Hz/sec
Phase angle	+/- 10°
C/B closing time	50 ms
The Phase sequence must match	

The settings for the synchronising equipment to achieve this must be within these parameters.
The voltage difference when paralleling with the grid/mains utility is +/- 3% .

Automatic Voltage Regulator Type MX341

The MX341 AVR is powered by a ‘shaft mounted Permanent Magnet Generator (PMG), Pilot Exciter. The PMG forms part of the separate excitation system for the STAMFORD synchronous, brushless, generator.

Initial Checks

The following 'jumper' connections must be in the correct position for the correct number of poles and the operating frequency of the generator.

Frequency selection terminals	
4 pole 50Hz	LINK 2-3
4 pole 60Hz	LINK 1-3
Stability selection terminals	LINK A-B
Excitation Interruption Link	K1-K2

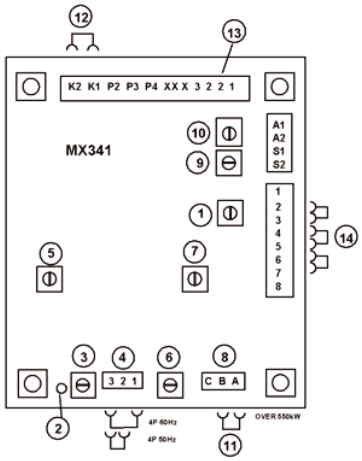

1	Volts	8	Stability section
2	Indicator led	9	Droop
3	UFRO	10	Trim
4	Frequency	11	Link (over 550kW)
5	Dip	12	Isolation link
6	Stability	13	2 x pin 2 use either
7	Excitation trip	14	Std. sensing links

Initial Start Up

On completion of generating set assembly and before starting the generating set, ensure that all of the engine manufacturer's pre-running procedures have been completed, and that adjustment of the engine governor is such that the generator will not be subjected to speeds in excess of 125% of the rated speed.

> **Caution: Over-speeding the generator during initial setting of the speed governor can result in damage to the generator rotating components.**

Voltage Set Up

The voltage is factory set as per the rating plate. If necessary adjust the voltage to the no load level as required.
To adjust the voltage remove the AVR access cover plate, use the insulated tool supplied.

Stability Set Up

The STABILITY control potentiometer is pre-set and should not normally require adjustment. If adjustment is necessary proceed as follows:

- Run the generating set on no-load and check that speed is correct and stable.
- Turn the STABILITY control potentiometer clockwise, and then turn slowly anti-clockwise until the generator voltage starts to become unstable. The correct setting is slightly clockwise from this position (i.e. where the machine volts are stable but close to the unstable region).

AVR adjustments

Having adjusted VOLTS and STABILITY during the initial start-up procedure the other AVR control functions should not require adjustment. If instability on load is experienced, recheck STABILITY setting.
If poor performance is experienced refer to the following paragraphs on each function:
Check that the symptoms indicate that adjustment is necessary.
Make the necessary adjustments.

Under Frequency Roll Off (UFRO)
The AVR incorporates an underspeed protection circuit which gives a voltage/speed (Hz) characteristic as shown:
The UFRO control potentiometer sets the “knee point” [1]. Symptoms of incorrect setting are
a) The light emitting diode (LED) indicator permanently lit when the generator is on load
b) Poor voltage regulation on load, i.e. operation on the sloping part of the characteristic [2].
Clockwise adjustment lowers the frequency (speed) setting of the "knee point" and extinguishes the LED.
For Optimum setting the LED should illuminate as the frequency falls just below nominal frequency, i.e. 47Hz on a 50Hz generator or 57Hz on a 60Hz generator.

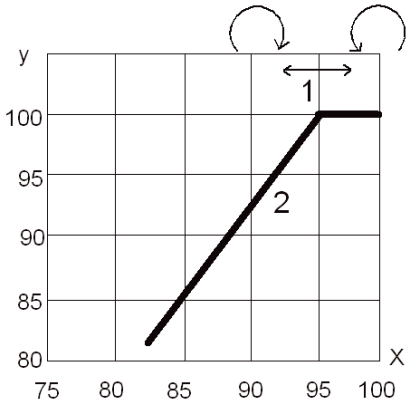

X = % Speed (Hz) y = % voltage
1 = Knee point. 2 = Typical slope.

Caution: If the LED is illuminated and no output voltage is present, refer to EXC TRIP and/or OVER/V sections below.

EXC TRIP (Excitation Trip)
An AVR supplied from a permanent magnet generator inherently delivers maximum excitation power on a line to line or line to neutral short circuit. In order to protect the generator windings the AVR incorporates an over excitation circuit which detects high excitation and removes it after a pre-determined time, (10 seconds).
Symptoms of incorrect setting are the generator output collapses on load or small overload, and the LED is permanently illuminated.
The correct setting is 70 volts +/- 5% between terminals X and XX.

Transient Load Switching
The additional function controls of DIP and DWELL are provided to enable the load acceptance capability of the generating set to be optimised. The overall generating set performance depends upon the engine capability and governor response, in conjunction with the generator characteristics.
It is not possible to adjust the level of voltage dip or recovery independently from the engine performance, and there will always be a 'trade off' between frequency dip and voltage dip.

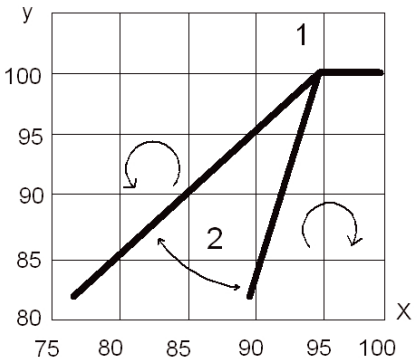

DIP.
The dip function control potentiometer adjusts the slope of the voltage/speed (Hz) characteristic below the knee point as shown below:

X = % Speed (Hz)
y = % voltage
1 = Knee point
2 = Adjustable slope

Summary of Controls, MX341

Control	Function	Direction
Volts	To adjust generator output voltage	Clockwise increases output voltage
Stability	To prevent voltage hunting	Clockwise increases stability or damping effect
UFRO	To set under frequency roll off knee point	Clockwise reduces knee point frequency
Droop	To set generator droop to 5% at full load 0 PF	Clockwise increases the droop
V/Trim	To match AVR input to accessory output	Clockwise allows the accessory more control over
Exc Trip	To set the over excitation cut off level	Clockwise increases the cut off level
Dip	To set the initial frequency related voltage dip	Clockwise increases the voltage dip

Automatic Voltage Regulator Type MX321

The MX321 is the most sophisticated AVR in the STAMFORD range. Powered by a ‘shaft mounted Permanent Magnet Generator (PMG), Pilot Exciter’ it forms part of the separate excitation system for the brushless generator.

Initial Checks

The following 'jumper' connections must be in the correct position for the correct number of poles and the operating frequency of the generator.

- MX321 jumper connections
- Frequency selection terminals
- 4 pole 50Hz operation
- 4 pole 60Hz operation
- Stability selection terminals
- Excitation Interruption Link

- LINK 2-3
- LINK 1-3
- LINK A-B
- K1-K2

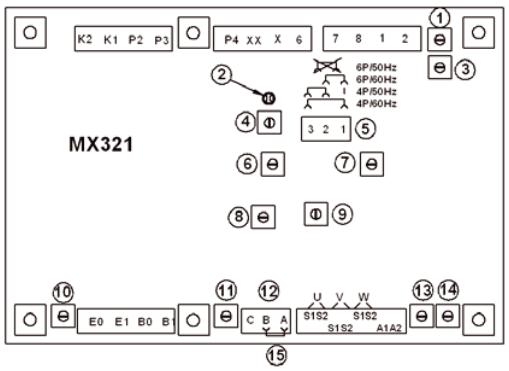

1	Volts	9	Stability
2	Indicator led	10	Over/v
3	I/limit	11	Exc trip
4	UFRO	12	Stability selector
5	Frequency selector	13	Droop
6	Dip	14	Trim
7	rms	15	Link (over 550kW)
8	Dwell		

Initial Start Up

On completion of generating set assembly and before starting the generating set, ensure that all of the engine manufacturer's pre-running procedures have been completed, and that adjustment of the engine governor is such that the generator will not be subjected to speeds in excess of 125% of the rated speed.

Caution: Overspeeding the generator during initial setting of the speed governor can result in damage to the generator rotating components.

Voltage Set Up

The voltage is factory set as per the rating plate. If necessary adjust the voltage to the no load level as required.
To adjust the voltage remove the AVR access cover plate, use the insulated tool supplied.

Stability Set Up

The STABILITY control potentiometer is pre-set and should not normally require adjustment. If adjustment is necessary proceed as follows:

- Run the generating set on no-load and check that speed is correct and stable.
- Turn the STABILITY control potentiometer clockwise, then turn slowly anti-clockwise until the generator voltage starts to become unstable.

Note: The correct setting is slightly clockwise from this position (i.e. where the machine volts are stable but close to the unstable region).

- **Ramp Adjustment**
- The AVR includes a soft start circuit to control the rate of voltage build-up when the generator runs up to speed. This is normally pre-set to give a voltage ramp-up time of approximately three seconds. If required, this can be adjusted between the limits defined in the specification.
- With the [RAMP] control fully counter-clockwise the AVR ramp time is approximately 0.5s. With the [RAMP] control fully clockwise the value is extended to approximately 4.0s.

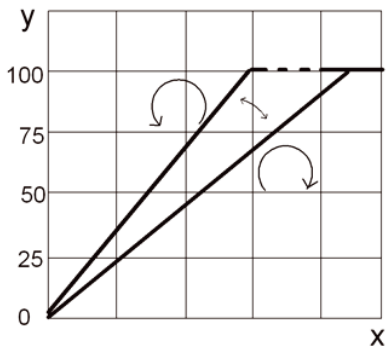

X = Time Y = Voltage

AVR Adjustments

Having adjusted VOLTS and STABILITY during the initial start-up procedure, other AVR control functions should not normally need adjustment. If instability on load is experienced, recheck stability setting. If however, poor performance is experienced, refer to the following paragraphs on each function to:

a) Check that the symptoms observed do indicate adjustment is necessary.
b) Make the necessary adjustments.

Under Frequency Roll Off (UFRO)

The AVR incorporates an underspeed protection circuit which gives a voltage/speed (Hz) characteristic as shown:

The UFRO control potentiometer sets the “knee point” [1]. Symptoms of incorrect setting are

a) The light emitting diode (LED) indicator permanently lit when the generator is on load

b) Poor voltage regulation on load, i.e. operation on the sloping part of the characteristic [2].

Clockwise adjustment lowers the frequency (speed) setting of the "knee point" and extinguishes the LED. For Optimum setting the LED should illuminate as the frequency falls just below nominal frequency, i.e. 47Hz on a 50Hz generator or 57Hz on a 60Hz generator.

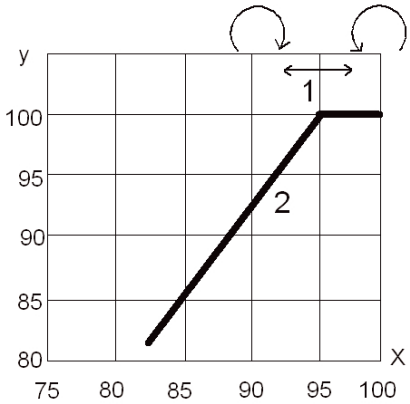

X = % Voltage y = % speed (Hz)
1 = Knee point. 2 = Typical slope.

Caution: If the LED is illuminated and no output voltage is present, refer to EXC TRIP and/or OVER/V sections below.

EXC TRIP (Excitation Trip)

An AVR supplied from a permanent magnet generator inherently delivers maximum excitation power on a line to line or line to neutral short circuit. In order to protect the generator windings the AVR incorporates an over excitation circuit which detects high excitation and removes it after a pre-determined time, i.e. 8-10

seconds.
Symptoms of incorrect setting are the generator output collapses on load or small overload, and the LED is permanently illuminated.
The correct setting is 70 volts +/- 5% between terminals X and XX.

OVER/V (Over Voltage)
Over voltage protection circuitry is included in the AVR to remove generator excitation in the event of loss of AVR sensing input. The AVR has both internal electronic de-excitation and provision of a signal to operate an external circuit breaker.
The correct setting is 300 volts +/-5% across terminals E1, E0.
Clockwise adjustment of the OVER/V control potentiometer will increase the voltage at which the circuit operates.

Transient Load Switching
The additional function controls of DIP and DWELL are provided to enable the load acceptance capability of the generating set to be optimised. The overall generating set performance depends upon the engine capability and governor response, in conjunction with the generator characteristics.
It is not possible to adjust the level of voltage dip or recovery independently from the engine performance, and there will always be a 'trade off' between frequency dip and voltage dip.

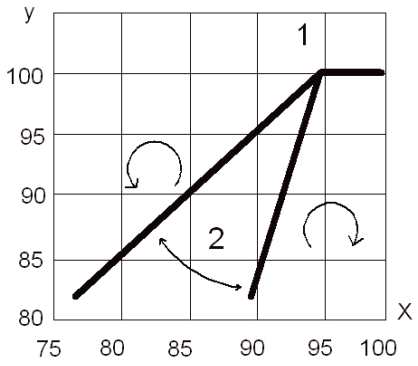

DIP.
The dip function control potentiometer adjusts the slope of the voltage/speed (Hz) characteristic below the knee point as shown below:

X = % Voltage
Y = % speed (Hz)
1 = Knee point
2 = Adjustable slope

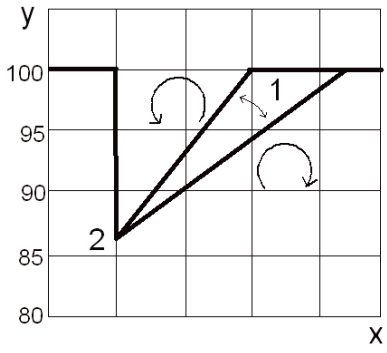

DWELL
The dwell function introduces a time delay between the recovery of voltage and recovery of speed.
The purpose of the time delay is to reduce the generator kW below the available engine kW during the recovery period, thus allowing an improved speed recovery.

Again this control is only functional below the "knee point", i.e. if the speed stays above the knee point during load switching there is no effect from the DWELL function setting.

X = % Voltage y = % speed (Hz)
1 = Adjustable slope 2 = Instant of load application

Overvoltage De-Excitation Circuit Breaker
This accessory provides positive interruption of the excitation power in the event of overvoltage due to loss of sensing or internal AVR faults including the output power device.
With the MX321 AVR this accessory is supplied loose for fitting in the control panel.

Caution: When the Circuit Breaker is supplied loose, terminals K1&K2 at the auxiliary terminal block are fitted with a link to enable operation of the AVR. When connecting the circuit breaker this link must be removed.

Resetting The Excitation Breaker

In the event of operation of the circuit breaker, indicated by loss of generator output voltage, manual resetting is required. When in the "tripped" state the circuit breaker switch lever shows "OFF". To reset move the switch lever to the position showing "ON".

> **Warning: Terminals, which are LIVE with the generating set running, are exposed when the AVR access cover is removed. Resetting of the circuit breaker must be carried out with the generating set stationary, and engine starting circuits disabled.**

When fitted in the generator, access to the breaker is gained by removal of the AVR access cover. The circuit breaker is mounted on the AVR mounting bracket either to the left or to the right of the AVR depending upon AVR position. After resetting the circuit breaker replace the AVR access cover before restarting the generating set.

Current Limiting

This accessory works in conjunction with the MX321AVR circuits to provide an adjustment to the level of current delivered into a fault. One current transformer (CT) per phase is fitted to provide current limiting on any line to line or line to neutral fault. Note: The W phase CT can also provide "DROOP". Refer to 'Droop', for setting droop independent of current limit. Adjustment means is provided with the "I/LIMIT" control potentiometer on the AVR. If current limit transformers are supplied with the generator the limit will be set in accordance with the level specified at the time of order, and no further adjustment will be necessary. However, should the level need to be adjusted, refer to the setting procedure.

Setting Procedure

Run the generating set on no-load and check that engine governor is set to control nominal speed.

Stop the generating set. Remove the link between terminals K1-K2 at the auxiliary terminal block and connect a 5A switch across the terminals K1-K2.

Turn the "I/LIMIT" control potentiometer fully anticlockwise. Short-circuit the stator winding with a bolted 3 phase short at the main terminals. An AC current clip-on ammeter is required to measure the winding lead current.

With the switch across K1-K2 open start the generating set.

Close the switch across K1& K2 and turn the "I/LIMIT" control potentiometer clockwise until required current level is observed on the clip-on ammeter. As soon as correct setting is achieved open the K1& K2 switch.

Should the current collapse during the setting procedure, the internal protective circuits of the AVR will have operated. In this event shut down the set and open the K1&K2 switch. Restart the set and run for 10 minutes with K1&K2 switch open, to cool the generator windings, before attempting to resume the setting procedure.

> **Caution: Failure to carry out the correct COOLING procedure may cause overheating and consequent damage to the generator windings**

Summary of Controls, MX321

Control	Function	Direction
Volts	To adjust generator output voltage	Clockwise increases output voltage
Stability	To prevent voltage hunting	Clockwise increases stability or damping effect
UFRO	To set under frequency roll off knee	Clockwise reduces knee point frequency
Droop	To set generator droop to 5% at full	Clockwise increases the droop
V/Trim	To match AVR input to accessory	Clockwise allows the accessory more control
Exc Trip	To set the over excitation cut off level	Clockwise increases the cut off level
Dip	To set the initial frequency related	Clockwise increases the voltage dip
I Limit	To set the maximum short cct. current	Clockwise increases the short circuit current
Dwell	To set under frequency recovery	Clockwise increases the recovery time

Fault Finding, MX321 & MX341 AVRs

Warning: Fault finding procedures present hazards, which can result in injury or death. Only personnel qualified to perform electrical and mechanical service should carry out these procedures. Ensure engine-starting circuits are disabled before commencing service or maintenance procedures. Isolate any anti-condensation heater supply.

Note: Before commencing any fault finding procedures examine all wiring for broken or loose connections.

No voltage build-up when starting set	1) Check link K1&K2 on auxiliary terminals. Follow Separate Excitation 2) Test Procedure to check machine and AVR.
Voltage very slow to build up	Check setting of ramp potentiometer. MX321 only
Loss of voltage when set running	First stop and restart set. If no voltage or voltage collapses after short time, follow Separate Excitation Test Procedure.
Generator Voltage high followed by collapse	1) Check sensing leads to AVR. 2) Carry out Separate Excitation Test Procedure.
Voltage unstable, either on no-load or with load	1) Check speed stability. 2) Check “STAB” setting. Refer to Load Testing section for procedure.
Low voltage On-load	1) Check speed. 2) If correct check “UFRO” setting.
Excessive voltage / speed Dip on load Switching	1) Check governor response. Refer to generating set manual. 2) Check “DIP” setting.
Sluggish recovery on load switching	Check governor response. Refer to generating set manual.

Separate Excitation Test Procedure

Important: The resistances quoted apply to a standard winding. For generators having windings or voltages other than those specified refer to factory for details. Ensure all disconnected leads are isolated and free from earth.

Important: Incorrect speed setting will give proportional error in voltage output.

Checking the Permanent Magnet Generator (PMG).
Start the set and run at rated speed.
Measure the voltages at the AVR terminals P2, P3 and P4. These should be balanced and within the following ranges: 50Hz generators - 170-180 volts. 60Hz generators - 200-216 volts.

Should the voltages be unbalanced stop the set, remove the PMG sheet metal cover from the non-drive end bracket and disconnect the multi-pin plug in the PMG output leads. Check leads P2, P3, and P4 for continuity. Check the PMG stator resistances between output leads. These should be balanced and within +/-10% of 2.6 ohms for the 4 pole generators and 5.6 ohms on 6 pole generators. If resistances are unbalanced and/or incorrect the PMG stator must be replaced. If the voltages are balanced but low and the PMG stator winding resistances are correct - the PMG rotor must be replaced.

Checking Generator Windings and Rotating Diodes
This procedure is carried out with leads F1 & F2 (X and XX) disconnected at the AVR and using a 12 V d.c. supply connected to leads F1 & F2 (X and XX).

Start the set and run at rated speed.

Measure the voltages at the main output terminals U, V and W. If voltages are balanced and within +/-1% of the generator nominal voltage, go to section on 'Balanced Main Terminal Voltages'.

Check voltages at AVR terminals 6, 7 and 8. These should be balanced and between 170-250 volts.
If voltages at main terminals are balanced but voltage at 6, 7 and 8 are unbalanced, check continuity of leads 6, 7 and 8. Where an isolating transformer is fitted (MX321 AVR) check transformer windings. If faulty the transformer unit must be replaced.
If voltages are unbalanced, refer to the section on 'Unbalanced Main Terminal Voltages'.

Balanced Main Terminal Voltages
If all voltages are balanced within 1% at the main terminals, it can be assumed that all exciter windings, main windings and main rotating diodes are in good order, and the fault is in the AVR. Refer the section for the 'AVR Function Test'.
If voltages are balanced but low, there is a fault in the main excitation windings or rotating diode assembly.

Check Rectifier Diodes
The diodes on the main rectifier assembly can be checked with a multimeter. The flexible leads connected to each diode should be disconnected at the terminal end, and the forward and reverse resistance checked. A healthy diode will indicate a very high resistance (infinity) in the reverse direction, and a low resistance in the forward direction. A faulty diode will give a full deflection reading in both directions with the test meter on the 10,000 ohms scale, or an infinity reading in both directions. On an electronic digital meter a healthy diode will give a low reading in one direction, and a high reading in the other.

Replacement of Faulty Diodes
The rectifier assembly is split into two plates, the positive and negative, and the main rotor is connected across these plates. Each plate carries 3 diodes, the negative plate carrying negative biased diodes and the positive plate carrying positive biased diodes. Care must be taken to ensure that the correct polarity diodes are fitted to each respective plate. When fitting the diodes to the plates they must be tight enough to ensure a good mechanical and electrical contact, but should not be over tightened. The recommended torque tightening is 4.06 - 4.74Nm (36-42 lb in).

Surge Suppressor
The surge suppressor is a metal-oxide varistor connected across the two rectifier plates to prevent high transient reverse voltages in the field winding from damaging the diodes. This device is not polarised and will show a virtually infinite reading in both directions with an ordinary resistance meter. If defective this will be visible by inspection, since it will normally fail to short circuit and show signs of disintegration. Replace if faulty.

Main Excitation Windings
If after establishing and correcting any fault on the rectifier assembly the output is still low when separately excited, then the main rotor, exciter stator and exciter rotor winding resistances should be checked (see Resistance Charts), as the fault must be in one of these windings. The exciter stator resistance is measured across leads F1 & F2 (X and XX). The exciter rotor is connected to six studs, which also carry the diode lead terminals. The main rotor winding is connected across the two rectifier plates. The respective leads must be disconnected before taking the readings.
Resistance values should be within +/-10% of the values given in the tables at the back of this manual.

Unbalanced Main Terminal Voltages
If voltages are unbalanced, this indicates a fault on the main stator winding or main cables to the circuit breaker.

> **Note: Faults on the stator winding or cables may also cause noticeable load increase on the engine when excitation is applied.**

Disconnect the main cables and separate the winding leads U1-U2, V1-V2, W1-W2 to isolate each winding section.
Measure each section resistance - values should be balanced and within +/-10% of the value given at the back of this manual
Measure insulation resistance between each phase and each phase to earth.

Unbalanced or incorrect winding resistances and/or a low insulation resistance to earth indicates defective or contaminated windings. See Winding condition in the Service Section.
Cleaning the windings requires specialist equipment and is therefore beyond the scope of this manual.

Excitation Control Test

AVR Function Test
Remove exciter field leads X & XX (F1 & F2) from the AVR terminals X & XX (F1 & F2).
Connect a 60W 240V household lamp to AVR terminals X & XX (F1 & F2).
Set the AVR VOLTS control potentiometer fully clockwise.
Connect a 12V, 1.0A DC supply to the exciter field leads X & XX (F1 & F2) with X (F1) to the positive.
Start the generating set and run at rated speed.
Check that the generator output voltage is within +/- 10% of rated voltage.

Voltages at P2, P3, P4 terminals can be found in the data section of this manual
If the generator output voltage is correct but the voltage on 7-8 (or P2- P3) is low, check auxiliary leads and connections to main terminals.

The lamp connected across X & XX should glow for approximately 10 seconds and then turn off. Failure to turn off indicates faulty protection circuit and the AVR should be replaced. Turning the "VOLTS" control potentiometer fully anti-clockwise should turn off the lamp.

Should the lamp fail to light the AVR is faulty and should be replaced.

Important After this test turn VOLTS control potentiometer fully anti-clockwise.

To reset the voltage, start the generating set and run on no-load at nominal frequency. Slowly turn VOLTS control potentiometer clockwise until rated voltage is reached.

Accessories

The following accessories are available with the MX321 & MX341 AVR as fitted options. These control accessories may be fitted in the generator terminal box. If fitted at the time of supply, the wiring diagram(s) in the back of this book shows the connections. When the options are supplied separately, fitting instructions are provided with the accessory.

Paralleling Droop kit	Manual Voltage Regulator	Power Factor Control	Current Limiting

Remote Voltage Adjustment.
A remote voltage adjustment trimmer (hand trimmer) can be fitted. If fitted it connects across AVR terminals 1& 2. If a remote trimmer is not used, terminals 1& 2 will be linked. When the remote trimmer is used the link across terminals 1& 2 must be removed.

Parallel Operation
Understanding of the following notes on parallel operation is useful before attempting the fitting or setting of the droop kit accessory. (see synchronising notes)
When operating in parallel with other generators or the mains, it is essential that the incoming generator matches the condition of the busbar.

Voltage difference	+/- 0.5%
Frequency difference	0.1 Hz/sec
Phase angle	+/- 10°
C/B closing time	50 ms
The Phase sequence must match	

The settings for the synchronising equipment to achieve this must be within these parameters.
The voltage difference when paralleling with the grid/mains utility is +/- 3% .

Caution: Failure to meet these conditions before closing the interconnecting circuit breaker between two or more running generators will generate excessive mechanical and electrical stresses, resulting in serious damage to the generators and associated equipment.

A variety of techniques, varying from simple synchronising lamps to fully automatic synchronisers, can be used to ensure these conditions are met.
Once connected in parallel a minimum instrumentation level per generator of voltmeter, ammeter, wattmeter (measuring total power per generator), and frequency meter is required in order to adjust the engine and generator controls to share kW in relation to engine ratings and kVAr in relation to generator ratings.

Load Sharing
It is important to recognise that:

kW load is derived from the engine, the speed governor characteristics determine the kW sharing between sets. To set up the governor Read generating set manufacturer's instructions for setting controls

kVA load is derived from the generator, and the excitation control characteristics determine the kVA sharing.

Droop
Quadrature droop is the most commonly used method of kVAr sharing. The droop circuit creates a generator voltage characteristic that falls with decreasing power factor (increasing kVAr). This is achieved with an additional current transformer (C.T.) and a burden resistor on the AVR board. The C.T. provides a signal dependent on the current phase angle (i.e. the power factor). This and a percentage of the burden resistor voltage are summed into the AVR circuit. Increasing droop is obtained by turning the DROOP control potentiometer clockwise.
Generally 5% droop at full load current zero p.f. is sufficient to ensure kVAr sharing.

If the droop accessory C.T. has been supplied with the generator it will have been tested to ensure correct polarity and set to a nominal level of droop. The final level of droop will be set during generating set commissioning.

Although nominal droop setting may be factory set it is advisable to go through the setting procedure below.

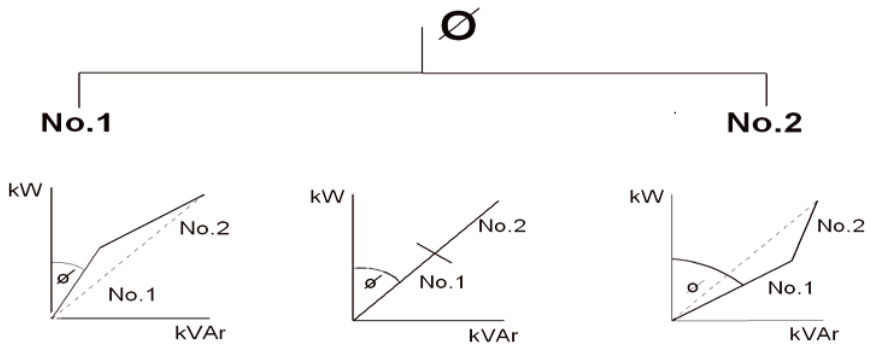

Although nominal droop setting may be factory set it is advisable to go through the setting procedure below.

Droop Setting Procedure
Depending upon available load the following settings should be used - all are based on rated current level.

0.8 p.f. load	**(at full load current)**	**set droop to 3%**
zero p.f. load	**(at full load current)**	**set droop to 5%**

Setting the droop with low power factor load is the most accurate.
Run each generator as a single unit at rated frequency or rated frequency + 4% depending upon type of governor and nominal voltage. Apply available load to rate current of the generator. Adjust 'DROOP' control potentiometer to give droop in line with above table. Clockwise rotation increases amount of droop. Refer the section for the appropriate AVR to establish the location of the droop potentiometer.

Note 1) Reverse polarity of the C.T. will raise the generator voltage with load. The polarities S1&S2 shown on the wiring diagrams are correct for clockwise rotation of the generator looking at the drive end. Reversed rotation requires S1&S2 to be reversed.

Note 2) the most important aspect is to set all generators equal. The precise level of droop is less critical.

Note 3) A generator operated as a single unit with a droop circuit set at rated load 0.8 power factor is unable to maintain the usual 0.5% regulation. A shorting switch can be connected across S1&S2 to restore regulation for single running.

Caution: LOSS OF FUEL to an engine can cause its generator to motor with consequent damage to the generator windings. Reverse power relays should be fitted to trip main circuit breaker.

Caution: LOSS OF EXCITATION to the generator can result in large current oscillations with consequent damage to generator windings. Excitation loss detection equipment should be fitted to trip main circuit breaker.

Manual Voltage Regulator (MVR)
This accessory is provided as an 'emergency' excitation system, in the event of an AVR failure.
Powered from a PMG output the unit is manually set, but automatically controls the excitation current, independent of generator voltage or frequency.
The unit is provided with 'MANUAL', 'OFF', 'AUTO' switching facility.

'MANUAL':

Position connects the exciter field to the MVR output. The generator output is then controlled by the operator adjusting the excitation current.

'OFF'

Disconnects the exciter field from both MVR and the normal AVR.

'AUTO'

Connects the exciter field to the normal AVR and the generator output is controlled at the pre-set voltage under AVR control.

Power Factor Controller (PFC3)
This accessory is primarily designed for those generator applications where operation in parallel with the mains supply is required.

Protection against loss of mains voltage or generator excitation is not included in the unit and the system designer must incorporate suitable protection.

The electronic control unit requires both droop and kVAr current transformers. When supplied with the generator, wiring diagrams inside the back cover of this manual show the connections and the additional instruction leaflet provided gives details of setting procedures for the Power Factor Controller.

The unit monitors the power factor of the generator current and adjusts excitation to maintain the power factor constant.

This mode can also be used to control the power factor of the mains if the point of current monitoring is moved to the mains cables. Refer to the factory for appropriate details.

It is also possible to operate the unit to control kVAr of the generator if required. Refer to the factory for appropriate details.

Service

Warning: Service and fault finding procedures present hazards which can result in severe personal injury or death. Only personnel qualified to perform electrical and mechanical service should carry out these procedures. Ensure engine-starting circuits are disabled before commencing service or maintenance procedures. Isolate any anti-condensation heater supply.

Winding Condition
Guidance of Typical Insulation Resistance [IR] Values
The following is offered as general information about IR values and is aimed at providing guidance about the typical IR values for generators from new, through to the point of refurbishment.

New Machines
The generator's Insulation Resistance, along with many other critical factors, will have been measured during the generator manufacturing process. The generator will have been transported with an appropriate packaging suitable for the method of delivery to the Generating Set assembler's works. The assembler is expected to store the generator in a suitable location, protected from adverse environmental (and other) conditions.

However, absolute assurance that the generator will arrive at the Genset production line with IR values still at the factory test levels of above 100 Megohm to be guaranteed.

At Generating Set Assembler's Works
The generator should have been transported and stored such that it will be delivered to the assembly area in a clean dry condition. If held in appropriate storage conditions the generator IR value should typically be 25 Megohm

If the unused/new generator's IR values fall below 5 Megohm then a drying out procedure should be implemented by one of the processes outlined below, before being despatched to the end customer's site. Some investigation should be undertaken into the storage conditions of the generator while on site.

Generators in Service
It is known that a generator will give reliable service with an IR value of just 1.0 Megohm. For a relatively new generator to be so low it must have been subjected to inappropriate operating or storage conditions. Any temporary reduction in IR values can be restored to expected values by following one of the drying out procedures.

Winding Condition Assessment

Caution: The AVR should be disconnected and the Resistance Temperature Detector (R.T.D.) leads grounded during this test.

Caution: The windings have been H.V. tested during manufacture and further H.V. testing may degrade the insulation with consequent reduction in operating life. Should it be necessary to demonstrate H.V. testing, for customer acceptance, the tests must be carried out at reduced voltage levels i.e.

Test Voltage= 0.8 (2 X Rated Voltage + 1000)

The condition of the windings can be assessed by measurement of insulation resistance [IR] between phase to phase, and phase to earth.
Measurement of winding insulation should be carried out: -

- As part of a periodic maintenance plan.
- After prolonged periods of shutdown.
- When low insulation is suspected, e.g. damp or wet windings.

Care should be taken when dealing with windings that are suspected of being excessively damp or dirty. The initial measurement of the [IR] Insulation Resistance should be established using a low voltage (500V) megger type instrument. If manually powered, the handle should initially be turned slowly so that

the full test voltage will not be applied. If low values are suspected or immediately indicated the test should only continue for long enough to very quickly assess the situation.

Full megger tests (or any other form of high voltage test) should not be applied until the windings have been dried out, and if necessary cleaned.

Procedure for Insulation Testing

1. Disconnect all electronic components, AVR, electronic protection equipment etc. Ground the RTD's (Resistance Temperature Detection devices) if fitted.
2. Short out the diodes on the rotating diode assembly. Be aware of all components connected to the system under test that could cause false readings, or be damaged by the test voltage.
3. Carry out the insulation test in accordance with the ‘operating instructions’ for the test equipment.
4. The measured value of insulation resistance for all windings to earth and phase to phase should be compared with the guidance given above for the various 'life stages' of a generator. The minimum acceptable value is 1.0 Megohm on a 500V megger.

If low winding insulation is confirmed, one or more of the methods, given below, for drying the winding should be carried out.

Methods of Drying Out Generators

Cold Run

In the case of a generator in otherwise good condition that has not been run for some time, and has been standing in damp, humid conditions a simple procedure may suffice. It is possible that simply running the generator set unexcited – AVR terminals “K1” “K2” open circuit - for a period of say 10 minutes will sufficiently dry the surface of the windings and raise the IR to greater than 1.0 Megohm, and so allow the unit to be put into service.

Blown Air Drying

Remove the covers from all apertures to allow the escape of the water-laden air. During drying, air must be able to flow freely through the generator in order to carry off the moisture.

Direct hot air from two electrical fan heaters of around 1 – 3 kW into the generator air inlet apertures. Ensure the heat source is at least 300mm away from the windings to avoid over heating and damage to the insulation.

Apply the heat and plot the insulation value at half hourly intervals. The process is complete when the parameters covered in the section entitled, ‘Typical Drying Out Curve’, are met.

Remove the heaters, replace all covers and re-commission as appropriate.

If the set is not to be run immediately ensure that the anti-condensation heaters are energised, and retest prior to running.

Short Circuit Method

> **Warning: This process should only be performed by a competent engineer familiar with safe operating practices within and around generator sets of the type in question. Ensure the generator is safe to work on, initiate all mechanical and electrical safety procedures pertaining to the genset and the site.**
>
> **Caution: The short circuit must not be applied with the AVR connected in circuit. Current in excess of the rated generator current will cause damage to the windings.**

1. Bolt a short circuit of adequate current carrying capacity, across the main terminals of the generator. The shorting link should be capable of taking full load current.
2. Disconnect the cables from terminals “X” and “XX” of the AVR.
3. Connect a variable dc supply to the “X” (positive) and “XX” (negative) field cables. The dc supply must be able to provide a current up to 2.0 Amp at 0 - 24 Volts.
4. Position a suitable ac ammeter to measure the shorting link current.
5. Set the dc supply voltage to zero and start the generating set. Slowly increase the dc voltage to pass current through the exciter field winding. As the excitation current increases, so the stator current in

the shorting link will increase. This stator output current level must be monitored, and not allowed to exceed 80% of the generator's rated output current.

6. After every 30 minutes of this exercise:
   Stop the generator and switch off the separate excitation supply, measure and record the stator winding IR values, and plot the results. The resulting graph should be compared with the classic shaped graph. This drying out procedure is complete when the parameters covered in the section entitled 'Typical Drying Out Curve' are met.
7. Once the Insulation Resistance is raised to an acceptable level - minimum value 1.0 Megohm the dc supply may be removed and the exciter field leads "X" and "XX" re-connected to their terminals on the AVR.
8. Rebuild the genset, replace all covers and re-commission as appropriate.
9. If the set is not to be run immediately ensure that the anti-condensation heaters are energised, and retest the generator prior to running.

Typical Drying Out Curve
Whichever method is used to dry out the generator the resistance should be measured every half-hour and a curve plotted as shown

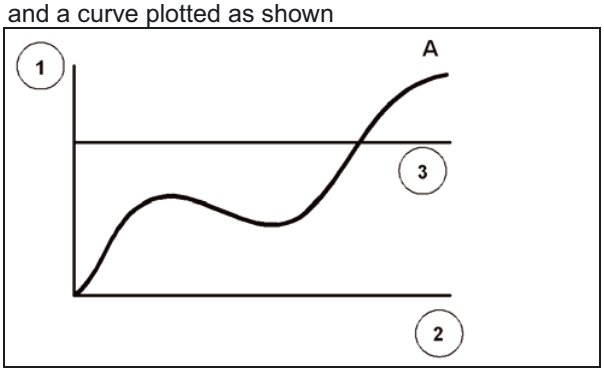

1) Y axis = Resistance

2) X axis = Time

3) One Megohm limit

The illustration shows a typical curve for a machine that has absorbed a considerable amount of moisture. The curve indicates a temporary increase in resistance, a fall and then a gradual rise to a steady state. Point 'A', the steady state, must be greater than 1.0 Megohm (If the windings are only slightly damp the dotted portion of the curve may not appear).
For general guidance, expect that the typical time to reach point 'A' will be around 3 hours.

Drying should be continued after point "A" has been reached for at least one hour.

It should be noted that as winding temperature increases, values of insulation resistance may significantly reduce. Therefore, the reference values for insulation resistance can only be established with windings at a temperature of approximately 20°C.

If the IR value remains below 1.0 Megohm, even after the above drying methods have been carried out correctly, then a Polarisation Index test [PI] should be carried out.

If the minimum value of 1.0 Megohm for all components cannot be achieved, rewinding or refurbishment of the generator will be necessary.

> **Caution: The generator must not be put into service until the minimum values are achieved.**

After drying out, the insulation resistances should be rechecked to verify the minimum resistances quoted above are achieved. On re-testing it is recommended that the main stator insulation resistance is checked as follows:
Separate the neutral leads

Ground V and W phase and megger U phase to ground

Ground U and W phase and megger V phase to ground
Ground U and V phase and megger W phase to ground

Caution: The generator must not be run if the minimum insulation value of 1.0 Megohm is not obtained.

Air Filters
Air filters for the removal of airborne particulate matter (dust) are offered as an addition to the standard build option. The filter elements do not remove and must not be allowed to get wet.

The frequency of filter maintenance will depend upon the severity of the site conditions. Regular inspection of the elements will be required to establish when cleaning is necessary.

Caution: Do not charge filters with oil.

Warning: Removal of filter elements enables access to LIVE parts. Only remove elements with the generator out of service.

Air Filter Cleaning Procedure

1. Remove the filter elements from the filter frames, taking care not to damage them.
2. Invert the filters dirty side down and agitate to remove particles of dirt.
   To remove stubborn particles low-pressure air can be used, in the reverse direction of flow, to force out stubborn particles.
   If necessary use a soft brush to gently brush off any remaining dirt particles.
3. Clean the sealing gaskets and surrounding area.
4. Visually check the condition of the filter elements and sealing gaskets, replace as necessary.
5. Ensure that the filter elements are dry before putting them back into service.
6. Carefully replace the filter elements

Maintenance

Warning: Before dissembling or assembling procedures are carried out ensure that the generating set is inhibited mechanically and isolated electrically.

Anti-Condensation Heaters

Warning: The electrical supply to the heaters must be isolated before attempting any work adjacent to the heater.

If anti condensations heaters are defect repair by replacement. Access is available via the air inlets at the non-drive end.

Removal of Permanent Magnet Generator (PMG)

1. Remove access cover (5).
2. Disconnect the multi-pin electrical connector
3. Remove the 4 bolts retaining the stator supports.
4. Tap the stator (3) out of its spigot and remove.
5. Note: As the highly magnetic rotor will attract the stator core, care must be taken to avoid a contact which may damage the winding.
6. Remove the exciter rotor securing bolt (6) and stow safely. Firmly pull the complete rotor assembly (4) from its location.

Note: Keep the rotor clean and avoid contact with metal dust or particles.

Note: The rotor assembly must not be dismantled.

Re-assembly

Re-assembly is a reversal of the above,

- Ensure rotor magnet assembly is free of metal pieces or particles.
- Care is needed to avoid winding damage when re-assembling the stator pack, due to strong magnetic attraction.

Removal of Bearings

Caution: When lifting single bearing generators, care is needed to ensure the generator frame is kept in the horizontal plane. The rotor is free to move in the frame and can slide out if not correctly lifted. Incorrect lifting can cause serious injury to personnel.

Caution: Always position the main rotor so that a full pole face of the main rotor core is at the bottom.

Note: Removal of the bearings may be effected either after the rotor assembly has been removed or more simply by removal of endbracket(s).

Note: Be sure to note the location of all components during removal to assist during the assembly process

Removal of the non drive end Bearing.

Note: This procedure assumes that there is sufficient space to carry out the work, if not it will be necessary to remove the generator from the generating set. All generators covered by this manual are fitted with re-greaseable bearings.

1. Remove the PMG
2. Dissemble remove the bearing grease pipes.
3. Remove 4 bolts from the bearing cap (2). Discard the wave-washer (11).
4. Remove the bearing cap and remove 4 bolts from the end bracket, holding the bearing cartridge (13).
5. Remove 8 bolts from the endbracket (1).
6. Support the endbracket with a hoist, insert two M10 jacking bolts (on the end bracket horizontal centre line) to drive the endbracket from the spigot. Screw in the bolts until the end bracket spigot is

clear of the locating recess, lower the whole assembly until the main rotor is resting in the stator bore. Still supporting the non drive end bracket, tap the bracket off the non drive end bearing cartridge (taking care that the exciter stator does not foul exciter rotor windings) and remove.

7. Lift the endbracket (1) and place aside.
8. Use bearing pullers to remove and discard the flinger (12)
9. Use circlip pliers to remove and discard the circlip (10).
10. Use bearing pullers to remove the bearing (7) by pulling on the bearing cartridge (13).

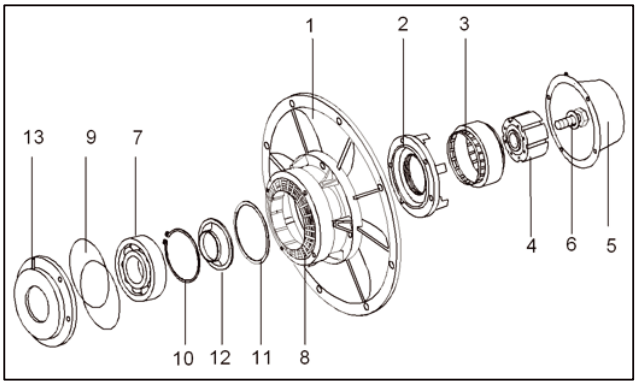

Drive End Bearing Removal

Note: To access the drive end bearing it is necessary to remove the generator from the generating set and remove the coupling arrangements.

Carry out the same procedure as used for the single bearing arrangement.

Removal of the Main Rotor

This procedure is similar for both single and two bearing arrangements and assumes that the generator has been removed from the generating set.

Note: Position the rotor so that a full pole face is at bottom dead centre.

1. Remove the PMG
2. Remove the bearing(s). Never refit the rotor with the old bearings.
3. Remove all access covers and terminal box lid.
4. Locate the exciter field leads X & XX and disconnect them.
5. To withdraw the rotor from the stator the rotor must be supported by a rope at the drive end and eased out of the stator core until half the main rotor is protruding out of the stator. At this point it is safe to release the weight from the rope sling.
6. Tightly bind a rope sling around the rotor core, and supporting the non-drive end of the rotor, guide it clear of the stator.

Caution: The rope sling may not be at the centre of gravity of the rotor and guidance at the ends of the rotor is essential. The full weight of the rotor given in the table below must be supported by the crane and sling. If the rotor core is allowed to drop more than a few millimetres at this point, it will make contact with the stator windings and may damage them.

Re-assembly is a reversal of the above procedure.

Note: Before assembly of a single bearing rotor into stator housing check that the drive discs are not damaged or cracked or showing any other signs of fatigue. Also check that holes in the discs for drive fixing screws are not elongated.

- Damaged components must be replaced.
- Refer to torque setting at the back or this book when refitting the drive discs.
- Refer to engine manual for torque setting of disc to flywheel bolts.

Refitting Bearings

Caution: Every effort must be made to establish a clean area around the generator when removing and replacing bearings. Contamination is a major cause of bearing failures.

Equipment

- Suitable cleaning solvent
- Thin protective gloves
- Lint free cleaning cloth
- Induction heater.

Preparation

Caution: Ensure that the bearing contact surfaces show no sign of wear or corrosion prior to fitting the bearing.

Caution: Never refit used bearings, grease flingers, wave washer or 'O' rings.

Caution: Only the outer race should be used to transmit load during assembly (NEVER use the inner race).

1. The bearing cap(s) and cartridge(s) must be thoroughly flushed out with clean solvent and checked for wear or damage, before re-assembly. Damaged components should be replaced before refitting the bearing.
2. Note: Gloves must be worn at all times when handling the bearings, grease and solvent.
3. Wipe clean the assembly surface, using cleaning solvent on lint free cloth.
4. Wipe clean: Bearing Cartridge, Wave Washer, Bearing Cap, grease flinger, all re-lubrication pipes and fittings (internal and external). Visually inspect all components after cleaning, for contamination.
5. Place all components on the clean assembly surface.
6. Caution: Do not use an air line to blow off excess fluid.
7. Thoroughly clean the external surface of the grease gun nozzle using lint free cloth.

Bearing preparation

8. Remove the bearing from its packaging.
9. Wipe off the preservative oil from the surface of the inner and outer rings - using lint free cloth only.
10. Place the bearing on the clean assembly surface, with the bearing designation marking facing down.
11. Apply half the specified bearing grease fill quantity to the upper face of the bearing (opposite side to the bearing designation markings).
12. Thumb the applied grease into the bearing, ensuring good penetration into the raceways/balls (use clean protective gloves).

Bearing Cartridge

Note: grease quantities can be found in the back of this book

13. Apply the specified cartridge grease fill quantity to the back face of the bearing housing.
14. Apply a small amount of grease to the grooved sealing surface in the cartridge.
15. Apply anti-fretting lubricant (MP14002 - Klüber Altemp Q NB 50) to the bearing housing circumference. Apply paste in a thin coherent layer by use of a lint free cloth (DO NOT rub in) (use clean protective gloves).
16. Non-drive end - fit new ‘O‘ Rings into the ‘O‘ Ring grooves in the bearing housing circumference.

Assemble Bearing into Cartridge

17. Heat the bearing cartridge to 25° C above ambient with an induction heater (Do not exceed 100°C).
18. With greased face of the bearing facing the cartridge bore, fit the bearing into the bearing housing. Ensure the bearing outer race contacts the location shoulder.

Assemble Bearing onto Shaft

19. Heat the Bearing and Cartridge assembly to 80ºC above ambient with an induction heater (use induction heater, no other heat source is suitable)
20. Slide the Bearing and Cartridge assembly over the shaft, pushing it firmly against the bearing seating shoulder.

21. Rotate the assembly (including inner race) 45º in either direction, to provide correct alignment. The bearing must be held firmly in place until it is cool enough to positively self locate.

Note: Ensure cartridge is at ambient temp. before assembling bracket.

Bearing Cap & Flinger

22. Apply the specified cap grease fill quantity to the inside face of the cap.
23. Fill the grease exhaust slot with grease.
24. Apply a small amount of grease to the grooved sealing surface in the cap.
25. Fit circlip. (single bearing only).
26. Heat flinger to 120^0C and place on shaft up to the bearing inner race. Hold firmly until positively located.
27. Place wave washer in cap, fit cap to bearing cartridge.

Re-lubrication pipe

28. Fill pipe and grease nipple with grease.
29. Fit pipe work to machine.

Returning To Service

After rectification of any faults found, remove all test connections and reconnect all control system leads.

30. Refit all terminal box covers/access covers and reconnect heater supply.
31. Carry out pre-running checks
32. Restart the set and adjust VOLTS control potentiometer on AVR by slowly turning clockwise until rated voltage is obtained.

Warning: Failure to refit all guards, access covers and terminal box covers can result in injury or death.

Bearing Maintenance

Re-lubrication

Ensure that the grease, grease gun, grease gun nozzle and re-lubrication nipple are free from abrasive materials and other contaminants.

If the generator is running, apply the specified quantity of grease via the grease nipple (see table below). Keep the generator running for at least 10 minutes after applying the grease.

If the generator is not running, apply the grease as above then start the generator and run for at least 10 minutes to allow excess grease to exhaust from the bearing assembly.

Exhaust grease can build up inside of the PMG cover. At the first opportunity, when the generator in stopped, remove the PMG cover and clean out any build up of exhaust grease.

Warning: Do not remove the PMG cover with the generator running.

Parts Identification

Single Bearing Generator

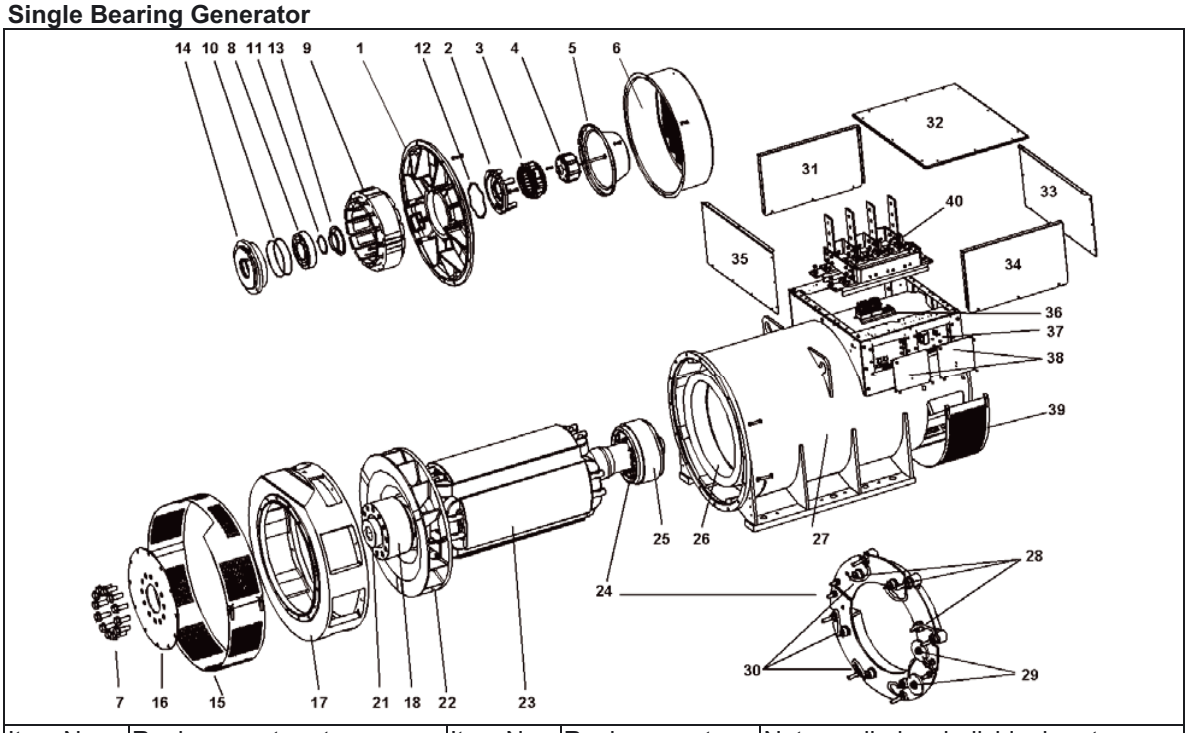

Item No.	Replacement parts	Item No.	Replacement parts	Not supplied as individual parts
1	NDE Bracket	23	Rotor	Includes:
2	NDE bearing cap	2		Bearing cap
3	PMG stator	8		Bearing kit
4	PMG rotor	14		Bearing cartridge
5	PMG Cover	18		Shaft hub
6	Rear air inlet cover (if fitted)	21		Shaft
7	Bolts for discs	22		Fan
9	Main Exciter Stator	24		Rectifier assembly
14	NDE bearing cartridge	25		Exciter rotor
15	NDE cover	27	Main Frame	Includes:
16	Coupling Disc	26		Wound Stator
17	DE Adapter	24	Rotating rectifier	Kit contains
31	Terminal box side panel	28		3 forward diodes
32	Terminal box lid	29		2 varistors
33	Terminal box endpanel	30		3 reverse diodes
34	Terminal box side panel	Kit	NDE bearing	Kit contains:
35	Terminal box endpanel DE	8		Bearing
36	Isolating transformer	10		2 X bearing ‘O’ rings
37	AVR & fixing arrangement	11		Circlip
38	AVR access covers	12		Waved washer
39	NDE cover	13		Grease Flinger
40	Main terminals			

Two Bearing Generator.

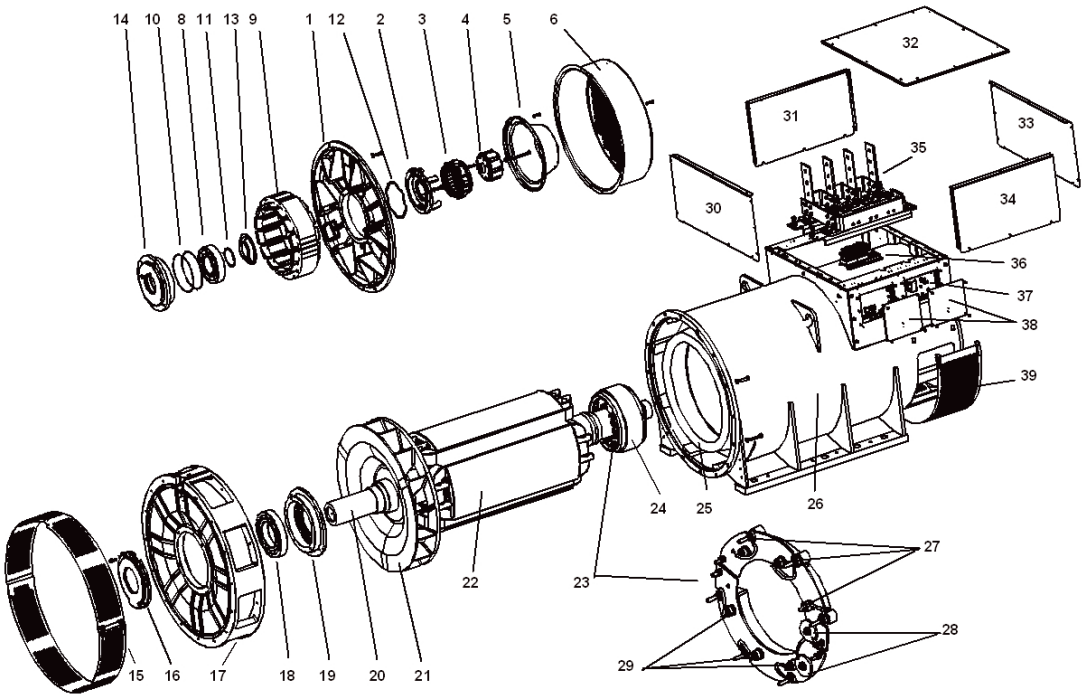

Item No.	Replacement parts	Item No.	Replacement parts	Not supplied as individual parts
1	NDE Bracket	22	Rotor	Includes:
2	NDE bearing cap	16 & 2		Bearing cap DE & NDE
3	PMG stator	18 & 8		Bearing kit DE & NDE
4	PMG rotor	14 & 19		Bearing cartridge DE & NDE
5	PMG Cover	20		Shaft
6	Rear air inlet cover (if fitted)	21		Fan
9	Main Exciter Stator	30		Rectifier assembly
14	NDE bearing cartridge	24		Exciter rotor
15	NDE cover	26	Main Frame	Includes:
16	Coupling Disc	25		Wound Stator
17	DE Adapter	23	Rotating rectifier	Kit contains:
30	Terminal box endpanel DE	27		3 forward diodes
31	Terminal box side panel	28		2 varistors
32	Terminal box lid	29		3 reverse diodes
33	Terminal box endpanel NDE	8	NDE bearing	Kit contains:
34	Terminal box side panel	10		Bearing
35	Main terminals			2 X bearing ‘O’ rings
36	Isolating transformer	12		Waved washer
37	AVR & fixing arrangement	13		Grease Flinger
38	AVR access covers	18	DE bearing	Kit contains:
39	NDE cover			Bearing
				2 X bearing ‘O’ rings
				Grease Flinger

Spares and After Sales Service

Recommended Spares
We recommend the use of genuine service parts supplied from one of our service outlets; these are supplied conveniently packaged for easy identification. Genuine parts may be recognised by the.

The recommend spares for Service and Maintenance can be found in the Data section of this manual. In critical applications a set of these service spares should be held with the generator.

When ordering parts the machine serial number or machine identity number and type should be quoted, together with the part description. The machine serial number can be found on the 'generator's name plate'.

If the nameplate is missing look for additional markings; each generator has its unique serial number stamped in to the upper section of the drive-end frame end-ring. In addition each generator is supplied with two adhesive rectangular labels fixed inside the terminal box; each carries the generator's unique identity number. One label has been fixed to the inside of the terminal box sheet metal-work, and the second label fixed to the main frame of the generator.

Orders and enquiries for parts should be addressed to:

STAMFORD Parts Department,
Barnack Road,
Stamford,
Lincolnshire
PE9 2NB
England.

UK Telephone: +44 (0) 1780 484000
UK Fax: +44 (0) 1780 766074

After Sales Service
Service Engineers are available to give technical support and advice as well as carry out maintenance and repair through Stamford and our subsidiary companies. An on-site service and repair facility is also available at our Stamford Works.

UK Telephone: +44 (0) 1780 484732
UK Fax: +44 (0) 1780 484104

Kluber Asonic GHY72 Grease
All bearing trials and calculated life expectancy are based on the use of Kluber Asonic GHY 72. We recommend the use of this Ester Oil/Polyurea grease or an alternative grease with the same specification. The grease specification is available on request.
Kluber has a world-wide distribution network, contact the manufacturers for your nearest stockist. Alternatively supplies can be purchased, from our Parts department, in handy economical packages. We also offer a suitable grease dispenser

Technical Data

Air Flow requirements - 4 pole & 6 pole(intake/outlet)

frequency	50 Hz		60 Hz		(intake – outlet)
speed	1500 rpm	1000rpm	1800 rpm	1200rpm	Pressure Drop
All cores	2.69 m³/sec	1.79 m³/sec	3.45 m³/sec	2.3 m³/sec	6mm water gauge
	5700cfm	3793cfm	7200cfm	4874cfm	(0.25”)

The air intake/outlet must be suitable for the air flow given in the table with additional pressure drops less than or equal to those shown:

Winding Resistances

Ohms	Main Stator Wdg 312	Main Rotor	Exciter Stator	Exciter Rotor	PM Stator
P734A	0.0016	1.67	17.5	0.048	2.6
P734B	0.0016	1.67	17.5	0.048	2.6
P734C	0.00126	1.85	17.5	0.048	2.6
P347D	0.00114	1.98	17.5	0.048	2.6
P734E	0.00093	2.17	17.5	0.048	2.6
P734F	0.00076	2.31	17.5	0.048	2.6
P734G	0.0008	2.42	16	0.043	2.6
P736B	0.0027	2.33	17	0.1	5.6
P736D	0.0018	2.83	17	0.1	5.6
P736F	0.0014	3.25	20	0.14	5.6

PMG stator resistance measured between P2, P3, P4 should be within +/-10%

Main Stator Winding Resistances

Ohms	Wdg 312	Wdg. 07	Wdg. 13	Wdg. 26	Wdg. 28
P734A	0.0016	0.0026	0.0013	0.0048	0.0031
P734B	0.0016	0.0026	0.0013	0.0048	0.0031
P734C	0.00126	0.002	0.0009	0.0034	0.0027
P347D	0.00114	0.002	0.0009	0.0031	0.0019
P734E	0.00093	0.0015	n/a	0.003	0.002
P734F	0.00076	0.0011	0.0005	0.0022	10..16
P734G	0.0008	0.0011	n/a	0.0022	n/a
P736B	0.0027	0.0042	n/a	n/a	n/a
P736D	0.0018	0.0032	n/a	n/a	n/a
P736F	0.0014	0.002	n/a	n/a	n/a

Coupling disc Torque setting

Frame	No. Of Discs	Single Disc Thickness	Total Thickness	Tightening Torque
P7	6	1.2	7.2	84kgm
				822Nm

Bending Moments

For the purposes of establishing the genset design the bending moment at the engine flywheel housing to generator adaptor interface should not exceed 275 kgm. (2000ft.lbs.)

Customer output cables

Clean plated surfaces with a degreasing agent, then lightly abrade them to remove any tarnish. Don't score the surface. The output cables should be connected to the terminals using grade 8.8 steel bolts and associated anti-vibration hardware. The table is for your guidance.

Frame	Hole Size	Bolt Size	Torque Nm
P7	17	16	90

Generator internal connections.

The torque settings for all connections within the generator, links, CTs, accessories, cables, etc., are 45Nm.

Re-lubrication Details for Regreasable Bearings

Frame P7	Bearing Position	Grease Quantity		Lubrication Period
		cm^3	Grams	
A, B, C, D, E	Non-Drive End	85	75	4000 - 4500 Hrs
A, B, C, D, E	Drive End	100	89	4000 - 4500 Hrs
F, G,	Non-Drive End	85	75	4000 - 4500 Hrs
F, G,	Drive End	136	121	4000 - 4500 Hrs

Initial fill for Regreasable Bearings

Frame P7	Bearing Position	bearing		cartridge		cap	
		cm^3	gms	cm^3	gms	cm^3	gms
A, B, C, D, E	Non-Drive End	174	154	87	77	87	77
A, B, C, D, E	Drive End	208	185	104	92	104	92
F, G,	Non-Drive End	174	154	87	77	87	77
F, G,	Drive End	272	242	136	121	136	121

Generator Weight

Kgms	Main Stator		Main Rotor		Complete generator	
No Bearings	1B	2B	1B	2B	1B	2B
P734A	1306	1307	1131	1077	2760	2710
P734B	1306	1307	1131	1077	2760	2710
P734C	1445	1445	1257	1195	3018	2967
P347D	1619	1619	1383	1321	3318	3267
P734E	1747	1747	1494	1432	3556	3506
P734F	1908	1908	1609	1565	3840	3807
P734G	2015	2015	1697	1654	4054	4022
P73**6**B	1106	1106	1260	1197	2680	2830
P73**6**D	1368	1368	1548	1486	3233	3182
P73**6**F	1590	1590	1813	1769	3710	3677

Recommended Service Parts

Diode Set	RSK6001 (3 forward & 3 reverse diodes with Surge Suppressors)
MX321 AVR	E000-23212/1P
MX341 AVR	E000-23412/1P
Kluber Grease	45-0281

Sealed for life Bearing kit Numbers			
bearings	**position**	**cores**	**Kit number.**
Single bearing	Non-drive end bearings	A - E	45 - 0418
Two bearing	Non-drive end bearings	A - E	45 - 0419
Two bearing	Drive end bearings	A - E	45 - 0420

Regreasable Bearings Kit Numbers			
bearings	**position**	**cores**	**Kit number.**
Single bearing	Non-drive end bearings	A - G	45 – 0421
Two bearing	Non-drive end bearings	A - E	45 – 0422
Two bearing	Drive end bearings	A - E	45 – 0423
Two bearing	Non-drive end bearings	F & G	45 – 0424
Two bearing	Drive end bearings	F & G	45 – 0425

A.C. GENERATOR WARRANTY

Warranty Period
In respect of a.c. generators the Warranty Period is eighteen months from the date when the goods have been notified as ready for despatch or twelve months from the date of first commissioning (whichever is the shorter period).

Defects, After Delivery
We will make good by repair, or at our option, by replacement, any fault that under proper use appears in the goods within the warranty period. Provided, on examination by us, the defect is solely due to defective material or workmanship. The defective part is to be promptly returned, carriage paid, to us at the factory, our Subsidiary of or, if appropriate to the Dealer who supplied the goods. All identification marks and numbers must be intact to aid identification.
Any part repaired or replaced, under warranty, will be returned to the customer free of charge (via sea freight if outside the UK).
We shall not be liable for any expenses that may be incurred in removing or replacing any part sent to us for inspection or in fitting any replacement part supplied by us.
We shall be under no liability for defects in any goods which have not been properly installed in accordance with our recommended installation practices as detailed in the 'Installation, Service and Maintenance Manual' and 'Installation Guidelines'.
We shall be under no liability for defects on products that have been improperly used or stored or which have been repaired, adjusted or altered by any person except our authorised agents or ourselves.
We shall not be liable for any second-hand goods, proprietary articles or goods not of our own manufacture although supplied by us, such articles and goods are being covered by the warranty (if any) given by the manufacturers.
All claims must contain full particulars of the alleged defect, the description of the goods, the Serial Number, the date of purchase, and the name and address of the Vendor (as shown on the manufacturer's identification plate). For Spare Parts, claims must contain the order reference under which the goods were supplied.
Our judgement, in all cases of claims, shall be final and conclusive and the claimant shall accept our decision on all questions as to defects and the exchange of a part or parts.
Our liability shall be fully discharged by either repair or replacement as above, and in any event shall not exceed the current list price of the defective goods.
Our liability under this clause shall be in lieu of any warranty or condition implied by law as to the quality or fitness for any particular purpose of the goods, and save as expressly provided in this clause we shall not be under any liability, whether in contract, tort or otherwise, in respect of defects in goods delivered or for any injury, damages or loss resulting from such defects or from any work undone in connection therewith.

Extensions to the warranty period
Extensions to the warranty period can be purchased, subject to additional terms and conditions pertaining to the specific application. Apply to the UK, Warranty Department

MACHINE SERIAL NUMBER…….

End of Life Disposal

Companies, specialising in reclaiming material from scrap products can reclaim most of the iron, steel and copper from the generator.

Recyclable material
Mechanically separate the base materials, iron, copper and steel, removing paint, polyester resin, and insulation tape and/or plastics residues from all components. Dispose of this ‘waste material’

The iron, steel and copper can now be recycled.

Items requiring specialist treatment.
Remove electrical cable, electronic accessories and plastic materials from the generator. These components need special treatment to remove the waste from the reclaimable material.

Forward the reclaimed materials for recycling.

Waste material
Dispose of waste material from both of the above processes via a specialist disposal company.

BARNACK ROAD, STAMFORD
LINCOLNSHIRE, PE9 2NB ENGLAND
Tel: +44 (0) 1780 484 000
Fax: +44 (0) 1780 484 100
www.cumminsgeneratortechnologies.com

'STAMFORD' is a registered trademark.

Operating Instructions

Honeywell

Unipoint Flammable and Toxic Gas Detection Controller

1 Safety

Ensure that this manual is read and understood **BEFORE** installing / operating / maintaining the equipment.

WARNINGS

Unipoint is designed for installation and use in indoor safe area non-explosive atmospheres. Installation must be in accordance with the recognized standards of the appropriate authority in the country concerned.

Unipoint should be installed inside a lockable enclosure or in a secure location to prevent unauthorized access.

Before carrying out any work ensure local regulations and site procedures are followed. Work must only be conducted by trained personnel. Take any necessary precautions to prevent false alarms.

The detectors/sensors that the controller connects to may be used for gas detection in hazardous atmospheres. Refer to the individual detector/sensor instructions for their details.

The fault and alarm relay outputs may be used to switch voltages in excess of 50Vac. Ensure circuits have DOUBLE or REINFORCED insulation and are segregated in accordance with the voltage being switched and access is restricted to authorized personnel only.

Unipoint must be zero and span calibrated with the detector before operation.

Disposal should be according to local waste management requirements and environmental legislation. Alternatively contact your local Honeywell Analytics representative.

Honeywell Analytics can take no responsibility for installation and/or use of its equipment if this is not done in accordance with the appropriate issue and/or amendment of the manual. The reader of this manual should ensure that it is appropriate in all details for the exact equipment to be installed and/or operated. If in doubt, contact Honeywell Analytics for advice.

Every effort has been made to ensure the accuracy of our documents; however, Honeywell Analytics can assume no responsibility for any errors or omissions in our documents or their consequences. Honeywell Analytics greatly appreciates being informed of any errors or omissions that may be found in the contents of any of our documents. For information not covered in this document, or if there is a requirement to send comments/ corrections about this document, please contact Honeywell Analytics.

Honeywell Analytics reserve the right to change or revise the information supplied in this document without notice and without obligation to notify any person or organization of such revision or change. If information is required that does not appear in this document, contact the local distributor/agent or Honeywell Analytics.

© Honeywell Analytics Ltd. 2006

2 Table of Contents

1 Safety....2
2 Table of Contents....3
3 Introduction....4
4 Installation....4
4.1 Mechanical Installation....4
4.2 Electrical Installation....6
4.2.1 Unipoint Controller Selection....6
4.2.2 Power Connection....6
4.2.3 Terminal Detail....7
4.2.4 Detector Types....7
4.2.5 Generic Detector Wiring Schematics....8
4.3 Maximum Cable Lengths....9
4.3.1 mA Detectors....9
4.3.2 mV Detectors....9
5 Default Configuration....10
5.1 Unipoint mV Input Version....10
5.2 Unipoint 4-20mA Input Version....10
6 Switch On....11
7 Initial Configuration....11
7.1 Setting Detector type (mA version only)....12
8 Normal Operation....13
8.1 Display and Pushbutton Layout....13
8.2 Normal Operation LCD Event Codes....14
8.3 Display, Sounder and Relay Operation....14
8.4 Accept/Resetting Alarms....14
8.5 Fault Codes....15
8.6 Inhibit....15
8.7 Overrange....15
8.8 Self Test....15
9 Configuration....16
10 Ranges and Units....17
11 Alarm Relay On/Off Delay....17
11.1 Alarm Relay On Delay....17
11.2 Alarm Relay Off Delay....18
12 Maintenance....18
13 Ordering Information....19
14 Warranty Statement....19
15 Appendix A- Specification....20
16 Notes....21
17 Notes....22
18 Notes....23

3 Introduction

Unipoint is a self-contained single channel gas detection controller for use in indoor safe areas. It is designed for use with any mV flammable gas detector as well as any 2 wire or 3 wire 4-20mA source gas detector*. Unipoint is DIN rail mounted and displays gas concentration, alarm, fault and status information via its backlit LCD and LEDs, as well as providing a built in audible alarm. A keypad located below the display provides the facility to make changes to the system configuration. Unipoint is powered from 24VDC via the DIN rail. The detectors are connected to the controller via terminals on the side of the controller where terminals for remote inhibit/reset and output relays are also located.

There are two versions of Unipoint controller available. The mV version is for use with 3 wire mV flammable gas detectors such as the Signalpoint or Sensepoint range of flammable detectors. The 4-20mA version is for use with 2 wire and 3 wire 4-20mA source detectors such as the Signalpoint or Sensepoint range of toxic and oxygen detectors. It has 4 buttons: '▲' up, '▼' down, '**x**' reset and '✓' OK, that are used navigate through the menus and change the configuration settings.

*All Honeywell Analytics gas detectors and third party detectors subject to overall power requirements.

4 Installation

WARNING

Unipoint is designed for installation and use in indoor safe area non-explosive atmospheres. Installation must be in accordance with the recognised standards of the appropriate authority in the country concerned. Prior to carrying out any installation ensure local regulations and site procedures are followed. The detectors used with Unipoint are often designed for use in hazardous atmospheres. Refer to the individual detector instructions for details of their installation.

4.1 Mechanical Installation

Outline Dimensional Drawing

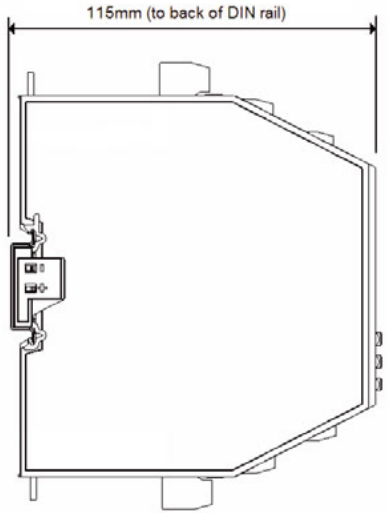

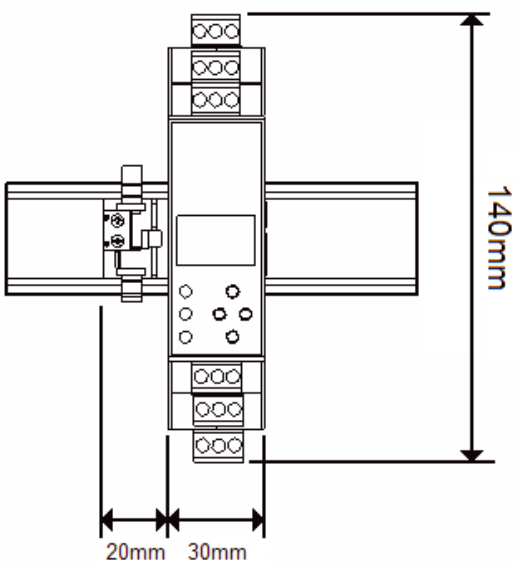

The Unipoint controller is mounted on standard symmetrical ‘top hat’ DIN Rail (35 x 7.5mm). To attach the Unipoint controller to the DIN rail follow the procedure below use the Installation Diagram as reference.

1. Clip the Unipoint controller socket on to the DIN rail (note the correct orientation from the diagram below).
2. Clip the power connector on to the DIN rail beside the controller socket.
3. Slide the connector and socket together until clip engages.
4. Attach the Unipoint Controller on to the socket by gently but firmly pushing it down onto the socket until it clips in place.
5. Additional Unipoint Controllers can be added to the DIN rail on the right hand side of the first unit. Clip additional controller sockets to rail and slide together until clips engage. Then attach the additional Unipoint Controllers.

Note: If mounting the Unipoint controller(s) inside an enclosure, ensure that the temperature inside the enclosure does not exceed the specified operating temperature.

Installation Drawing

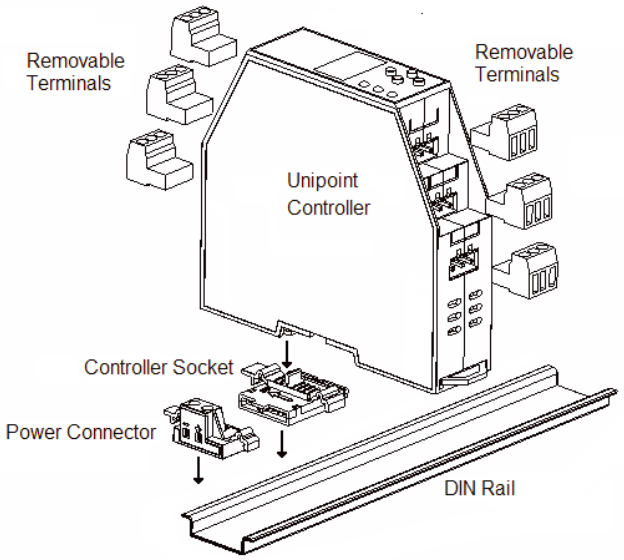

DIN Rail Drawing

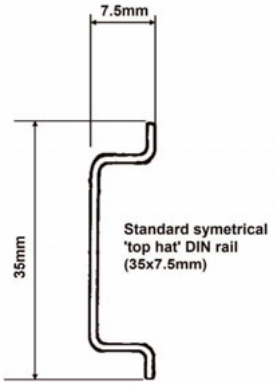

4.2 Electrical Installation

4.2.1 Unipoint Controller Selection

Detector	GasType	No. Wires	Unipoint Controller Required
Signalpoint	Flammable Toxic	3 2	mV mA
Sensepoint	Flammable Toxic	3 2	mV mA
Sensepoint Plus	Flammable Toxic	3 3	mA mA
Sensepoint Pro	Flammable Toxic	3 3	mA mA

4.2.2 Power Connection

Max number of Unipoint controllers on one DIN Bus

Detector type	Max number of controllers
3 wire mV	8
2 wire mA	8
3 wire mA	4

Unipoint Controller Maximum Power Consumption

Unipoint version	Controller status	Relays		Power
		Fault	Alarm	
mV	Normal operation, no faults, no alarms. Zero cable resistance	Energized	De energized	2.4W[1]
mV	Normal operation, no faults, no alarms. Max loop cable resistance (28 ohms)	Energized	De energized	3.6W[1]
mV	All alarms, no faults. Max cable resistance (28 ohms)	Energized	Energized	4.8W[1]
mA	Normal operation, no faults, no alarms. Inclusive of 2 wire signal loop current.	Energized	De energized	1.8W[2]
mA	All alarms, no faults. Inclusive of 2 wire signal loop current.	Energized	Energized	3.0W[2]

[1] includes power to detector
[2] excludes power to 3 wire mA detector.
All controllers with default configuration.

4.2.3 Terminal Detail

All electrical connections except power are made via removable terminals located on the top and bottom the controller. The power connection is made via the power connector attached to the DIN rail.

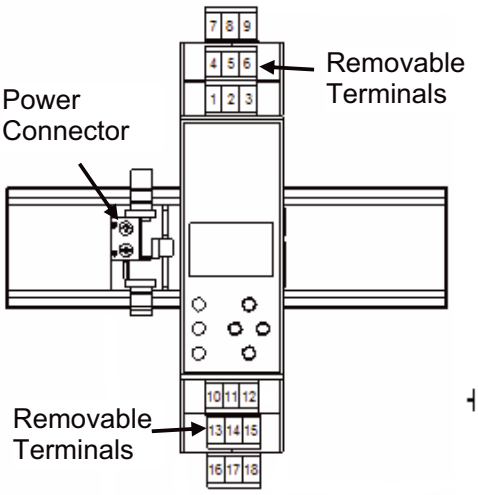

TERMINAL DETAIL					
1	+	Detector	10	NO	Alarm 1
2	S		11	C	
3	-		12	NC	
4	NO	Fault	13	NO	Alarm 2
5	C		14	C	
6	NC		15	NC	
7	R	Reset	16	NO	Alarm 3
8	I	Inhibit	17	C	
9	C	Common	18	NC	

For security we recommend the use of a Key Switches for the remote reset and inhibit inputs mounted on the front of the enclosure in which the Unipoint is mounted.

4.2.4 Detector Types

Unipoint can accept signals from three types of detector. The table below summarizes the types of detector compatible with Unipoint.

Type of Detector	**Output to Detector**	**Recommended Detector**
2 wire 4-20mA	Controller Input (18-32Vdc)-1.5*Vdc, 30mA (max). Sense resistor 33 Ohms.	Signalpoint or Sensepoint Toxic and Oxygen
3 wire 4-20mA source	Controller Input (18-32Vdc)-1.5*Vdc, 0.5A (max). Sense resistor 33 Ohms.	Sensepoint Plus and Sensepoint Pro
3 wire mV bridge	2.4-8.6V, 200mA constant current. Max cable loop resistance 28 Ohms.	Signalpoint or Sensepoint Flammable

* Voltage drop in Unipoint Controller

4.2.5 Generic Detector Wiring Schematics

To connect the detector to the Unipoint use a 2 or 3 wire cable (as appropriate) that is suitably armoured (e.g. Steel Wire Armour) or conduit according to local requirements. Acceptable wire cross sectional area is from 0.5 to 1.5mm^2 with overall screen. Connect the screen to ground at the enclosure that the Unipoint is mounted in.

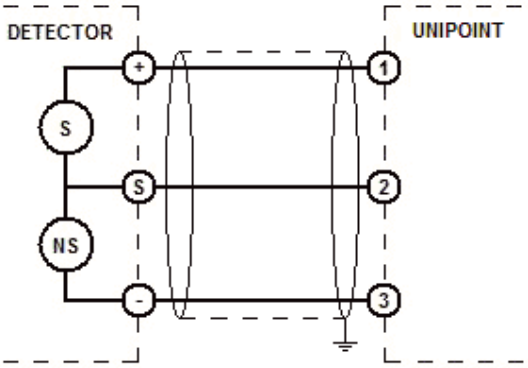

3 Wire mV Bridge

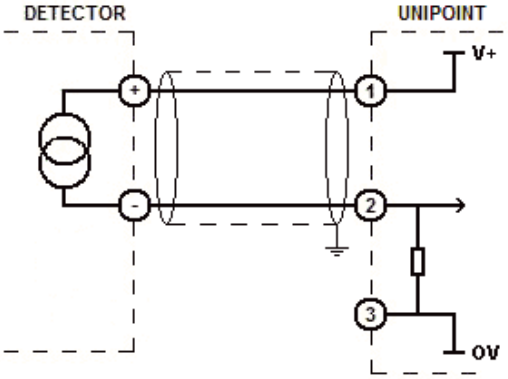

2 Wire 4-20mA

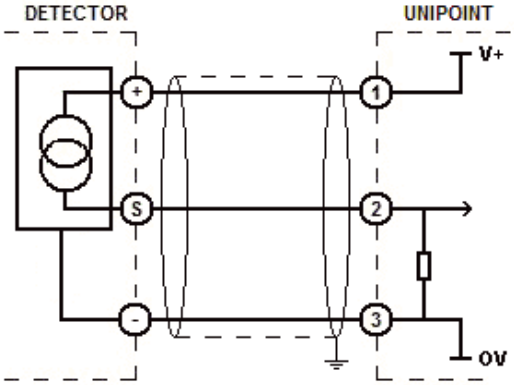

3 Wire 4-20mA Source

4.3 Maximum Cable Lengths

4.3.1 mA Detectors

To calculate the maximum cable run length from power source to the detector refer to the following example diagram and formula.

$$R_{loop} = (V_{controller} - 1.5V - V_{detector\ min}) / I_{detector}$$

Maximum cable run length = R_{loop} / cable per metre resistance where:

R_{loop} = maximum working cable loop resistance

$V_{controller}$ = maximum available supply voltage at controller

$V_{detector\ min}$ = minimum voltage at which the connected sensor can operate (sensor dependent, see individual sensor technical manual/data sheets)

$I_{detector}$ = sensor maximum drawn current. 30mA for 2 wire mA detectors. See individual detector technical manual/data sheets for max power consumption of 3 wire detectors.

4.3.2 mV Detectors

To calculate the maximum cable run length to the detector refer to the following typical example cable resistances. Max cable loop resistance = 28 ohms.

Solid Copper Conductor		
Cross Sectional Area		Maximum resistance at 20°C
(mm²)	AWG	(ohm/loop km)
0.50	21	72
0.75	19	50
1.00	18	36
1.50	16	24
Stranded Copper Conductor		
Cross Sectional Area		Maximum resistance at 20°C
(mm²)	AWG	(ohm/loop km)
0.50	21	73.6
0.75	19	49
1.00	18	35.2
1.50	16	23.4

5 Default Configuration

Unipoint has user configurable settings that allow the set up of the system to individual application requirements. Unipoint is supplied from the factory with a default configuration. These configurations are based on settings typically used in gas detection systems. Details of how to reconfigure Unipoint are given in section 8.

5.1 Unipoint mV Input Version

Function	Default configuration
Password	000 (Disabled)
Display range and units	0-100%LEL
Alarm Relay 1	Alarm level 1 10%LEL (Rising) Non-latching, normally de energized, energizes on alarm. Relay activation delay=0 seconds Relay de-activation hold=0 seconds (Single Pole change over, 240Vac/30Vdc, 3A max)
Alarm Relay 2	Alarm level 2 25%LEL (Rising) Non-latching, normally de energized, energizes on alarm. Relay activation delay=0 seconds Relay de-activation hold=0 seconds (Single Pole change over, 240Vac/30Vdc, 3A max)
Alarm Relay 3	Alarm level 3 50%LEL (Rising) Latching, normally de energized, energizes on alarm. Relay activation delay=0 seconds Relay de-activation hold=0 seconds (Single Pole change over, 240Vac/30Vdc, 3A max)
Fault Relay	Non-latching, normally energized, de-energizes on fault. (Single Pole change over, 240Vac/30Vdc, 3A max)
Inhibit	Controller inhibit activates fault relay.

5.2 Unipoint 4-20mA Input Version

Function	Default configuration
Password	000 (Disabled)
Display range and units	0-100ppm
Current input	0 mA Fault (open circuit) 4.0 to 20.0mA Gas reading (normal operation) 1.5 to 2.5mA Inhibit from sensor (configuration mode) >20.0mA Overrange
Alarm Relay 1	Alarm level 1 10% of full scale (Rising) Non-latching, normally de energized, energizes on alarm. Relay activation delay=0 seconds Relay de-activation hold=0 seconds (Single Pole change over, 240Vac/30Vdc, 3A max)
Alarm Relay 2	Alarm level 2 25% of full scale (Rising) Non-latching, normally de energized, energizes on alarm. Relay activation delay=0 seconds Relay de-activation hold=0 seconds (Single Pole change over, 240Vac/30Vdc, 3A max)
Alarm Relay 3	Alarm level 3 50% of full scale (Rising) Non-latching, normally de energized, energizes on alarm. Relay activation delay=0 seconds Relay de-activation hold=0 seconds (Single Pole change over, 240Vac/30Vdc, 3A max)
Fault Relay	Non-latching, normally energized, de-energizes on fault. (Single Pole change over, 240Vac/30Vdc, 3A max)
Inhibit	Controller inhibit activates fault relay and de-activates alarm relays. Field inhibit active (1.5 to 2.5mA on detector input).
Detector Type	2 Wire 4-20mA

6 Switch On

After connecting power, the controller enters a self test routine: All LCD segments flash, the fault and alarm LED flash, the sounder operates three times, the RAM, ROM and EEPROM are checked and the software version is displayed. If no faults are found (see section 7.5 for fault codes) the unit enters a detector warm up period indicted by a count down from 60 to 0 on the display. During this time the controller is inhibited ('Inh') so all alarms and faults are inactive.

At the end of the warm-up period the controller checks for detector and field wiring faults. If a fault is found, the fault code is displayed (see section 7.5 for fault codes). If no fault is found the controller enters normal operation and will display current gas reading and alarm(s) if appropriate.

7 Initial Configuration

WARNING
Unipoint must be zero and span calibrated with the detector before operation.

If the default configuration shown in section 5.1 (mV type controller) or 5.2 (mA type controller) does not match the application requirements, follow the procedures below to reconfigure the controller.

Notes: If using a mA version controller with a 3 wire mA type detector, carry out the procedure in section 7.1 first to set the correct detector type.

If configuring the controller for use with an Oxygen detector, skip the 'Set zero' instructions (steps 7-14) and use 20.9% (background air oxygen level) as the span calibration point.

After completing all the steps in a menu, the ✓ button must be pressed to save the changes. Press x at any time to ignore the changes made in the current menu.

1. Press the ▲▼ buttons together to enter the configuration mode.
2. Press ✓ to enter the 'Set Range and Units (FS)' menu.
3. The default range flashes. Press the ▲▼ buttons to select the required range.
4. Press ✓ to set the new range.
5. The default units start flashing. Press the ▲▼ buttons to select the required units.
6. Press ✓ to set the new units. (See section 9 for available ranges and units).
7. Press the ▼ button to select the 'Set Zero (0)' menu.
8. Press ✓ to enter the 'Set Zero (0)' menu.
9. The current zero gas reading is displayed.
10. Apply zero gas to the detector.
11. Press ✓ when the reading is stable.
12. The display will show '---' while calculating the zero point and then '0' when complete. If the zero fails 'FFF' is displayed.
13. Remove the zero gas from the detector.
14. Press ✓ to complete the zero calibration.
15. Press the ▼ button to select the 'Set Span (S)' menu.
16. Press ✓ to enter the 'Set Span (S)' menu.
17. 50% of the set range flashes.

18. Press ▲▼ buttons to set the concentration of the span calibration gas concentration being used.
19. Press ✓ to set the span calibration concentration.
20. Apply the span calibration gas to the detector.
21. The 'live' gas reading is displayed.
22. If the reading is too low 'S-L' is displayed, if too high 'S-H' is displayed.
23. When the reading is stable press ✓.
24. '---' is displayed while calculating the new span.
25. The display then shows the new span value. If span fails 'FFF' is displayed.
26. Remove the span gas from the detector and allow the display to return to zero.

Note: Allowing the reading to return to zero before exiting ensures no accidental alarms are triggered.

27. Press ✓ to return to the menu.
28. Press the ▼ button to select the 'Set Alarms (A1)' menu.
29. Press ✓ to enter the 'Set Alarms (A1)' menu.
30. The current alarm 1 set point flashes.
31. Press ▲▼ buttons to change the A1 set point.
32. Press ✓ to confirm.
33. The display shows the current alarm relay on delay in seconds.
34. Press ▲▼ buttons to change the alarm relay on delay.
35. Press ✓ to confirm.
36. The display shows the current alarm relay off (hold) delay in seconds.
37. Press ▲▼ buttons to change the alarm relay off delay.
38. Press ✓ to confirm.
39. The display shows the current alarm 1 relay configuration.
40. Press ▲▼ buttons to select either 'F' for falling or 'r' for rising alarm point.
41. Press ✓ to confirm.
42. Press ▲▼ buttons to select either 'E' for normally energized or 'd' for normally de-energized relay.
43. Press ✓ to confirm.
44. Press ▲▼ buttons to select either 'L' for latching or 'n' for non-latching relay.
45. Press ✓ to confirm.
46. The display now shows the current alarm 2 level.
47. Repeat steps 28 to 43 for alarm 2 and then alarm 3.
48. Press 'x' to return to normal operation.

Note: For details of other settings in the configuration menu refer to section 8.

7.1 Setting Detector type (mA version only)

The default detector type setting for a mA version controller is 2 wire. If using a 3 wire mA type detector carry out the procedure below:

1. Press the ▲▼ buttons together to enter the configuration mode.
2. Press ▲ or ▼ buttons to select the 'Detector Type (IP)' menu.
3. The current detector input type flashes (2L=2 wire mA).
4. Press the ▲▼ buttons to select 3L=3 wire mA).
5. Press ✓ to confirm.
6. Press x to return to normal operation.
7. Follow the procedures in section 7 to complete the initial configuration.

8 Normal Operation

In normal operation the green Power LED is illuminated and the 1st line of the LCD shows the current gas reading. The 2nd line is used to display text codes that provide additional information about the type of event that has occurred. An alarm, fault/inhibit LED and built in sounder are also used when signaling events.

8.1 Display and Pushbutton Layout

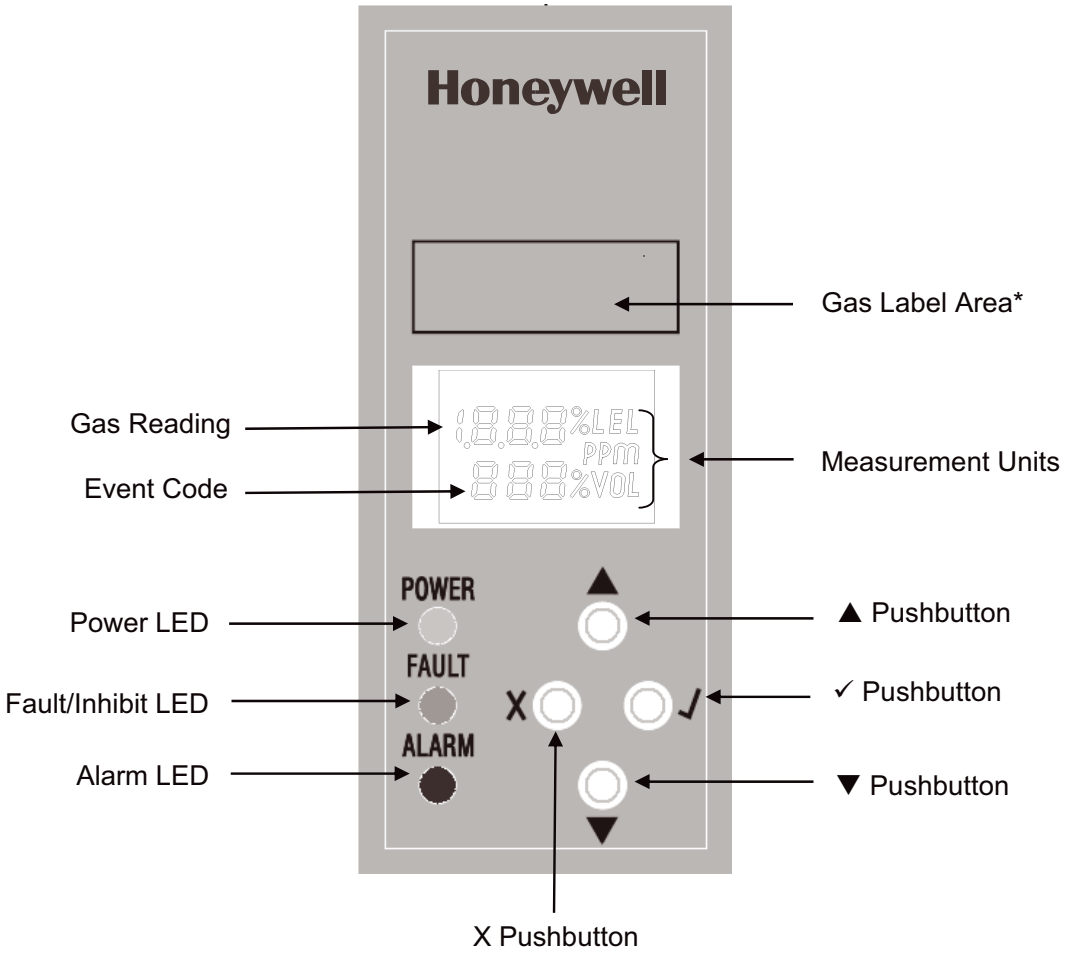

*A packet of stick on gas labels are supplied with each Unipoint Controller

8.2 Normal Operation LCD Event Codes

The display event codes are shown below:

NORMAL OPERATION DISPLAY TEXT CODES			
CODE			EVENT TYPE
A	-	1	Alarm point 1 exceeded
A	-	2	Alarm point 2 exceeded
A	-	3	Alarm point 3 exceeded
O	F	F	All outputs disabled
F	X	X	Fault. XX=Fault code
I	n	h	Remote or field* inhibit

*only available on mA version (see section 7.6 for further details).

8.3 Display, Sounder and Relay Operation

The table below shows the default operation of the display, sounder and relays for given events.

EVENT	LCD	LEDS*		SOUNDER	RELAY			
		ALARM	FAULT/INH		A1	A2	A3	F
Alarm 1 threshold exceeded	A-1	flashing	off	on	X			
Alarm 2 threshold exceeded	A-2	flashing	off	on	X	X		
Alarm 3 threshold exceeded	A-3	flashing	off	on	X	X	X	
Fault	FXX	off	flashing	on				X
Inhibit	Inh	off	flashing	off				X
Overrange	Or/A3	flashing	off	on	X	X	X	

*LED flash frequency: Alarm = $2H_z$, Fault = $1H_z$ and Inhibit = $0.5H_z$

8.4 Accept/Resetting Alarms

In normal operation, the X button on the controller front panel or a switch connected to the remote reset terminal is used to reset/accept alarm events. The effect of reset/accept dependent on gas reading and alarm latching setting is described below:

	Gas reading still exceeds alarm threshold	Gas reading below alarm threshold
Latched alarm	Sounder stops. Flashing alarm LED changes to steady. Gas reading and alarm code displayed on LCD. Alarm relay remains in alarm state.	Sounder stops. Alarm LED is turned off. The LCD alarm code clears. Alarm relay returns to original state.
Unlatched alarm	Sounder stops. Flashing alarm LED changes to steady. Gas reading and alarm code displayed on LCD. Alarm relay remains in alarm state.	Alarm indications and relay operation reset automatically without need for reset/accept.

Note: If the controller is in inhibit when an alarm threshold is exceeded the alarm LED only will operate. See section 10 for details of how the relay delay and hold function effects the operation of the unit.

8.5 Fault Codes

Below are the fault codes and recommended action to clear the fault.

FAULT CODE			DESCRIPTION	TROUBLE SHOOT
F	-	S	Sensor / wiring fault	Check sensor / field wiring
F	N	D	Negative drift	Calibrate detector
F	I	F	Excessive interference	Check field wiring
F	R		RAM fault	Replace controller
F	C		Memory failure	Replace controller
F	E		Configuration error	Replace controller

8.6 Inhibit

The controller is put into inhibit via a normally open switch connected to the inhibit terminal or when entering configuration mode. The inhibit is maintained until the switch is opened again or on return to normal operation mode.

Additionally, an inhibit signal of between 1.5mA to 2.5mA can be signaled to the controller from a field device. This facility is only available on mA version controllers (see section 8).

When in inhibit the alarm relay and sounder do not operate. The alarm LED will operate if the alarm threshold is exceeded. The 2nd line of the LCD will show Inh (except in configuration mode where a slow flashing fault LED indicates the inhibit).

The controller can also be disabled using the disable function in the configuration mode (see section 8).

See section 10 for details of how the relay delay and hold function is effected by inhibit.

8.7 Overrange

When the gas reading exceeds full scale ‘Or’ replaces the gas reading to indicate an overrange condition. The 2nd line of the LCD continues to show the alarm state. If alarm level 3 is configured latching then the overrange condition will also latch (default for 3 wire mV version).

8.8 Self Test

The controller enters a self test routine at power on. It can also be forced into a self test by pressing the ✓ button in normal operation. The controller automatically conducts a self test at regular intervals.

9 Configuration

From normal mode press the ▲▼ buttons together to enter configuration mode. If no password has been set the display will go directly to the menu selection. If a password has been set then the display will show 'OOO' and the 1st digit will flash. Press ▲▼ to change the first digit of the password. Press ✓ to move to the next digit. Repeat to set the 2nd and 3rd digits of the password. Press **x** at any time to exit and return to normal mode. Press ✓ after setting the 3rd digit to confirm the password and enter the menu selection. If the password entered is incorrect the display will return to normal mode. Use the table below to help navigate the menu and make configuration changes.

▲▼	OK	▲▼	OK	▲▼	OK	▲▼	OK	▲▼	OK	
RANGE AND UNITS (FS)*	✓	RANGE FLASHES. PRESS ▲▼ TO SELECT NEW RANGE	✓	UNITS FLASH. PRESS ▲▼ TO SELECT NEW UNITS.	✓	NEW RANGE AND UNITS SETTINGS CONFIRMED. RETURNS TO MAIN MENU				
SET ZERO (0)**	✓	CURRENT ZERO GAS READING DISPLAYED. APPLY ZERO GAS.	✓	'---' DISPLAYED WHILE MEASURING THEN ZERO READING DISPLAYED. IF ZERO FAILS 'FFF' IS DISPLAYED. REMOVE GAS.	✓	NEW ZERO SETTING CONFIRMED. RETURNS TO MAIN MENU				
SET SPAN (S)**	✓	50% OF RANGE FLASHES. PRESS ▲▼ TO SET CAL GAS CONCENTRATION	✓	APPLY CALIBRATION GAS. LIVE GAS READING DISPLAYED. 'S-L' IF TOO LOW, 'S-H' IF TOO HIGH.	✓	'---' DISPLAYED WHILE MEASURING THEN NEW SPANNED READING. IF SPAN FAILS 'FFF' IS DISPLAYED. REMOVE GAS	✓	NEW SPAN SETTING CONFIRMED. RETURNS TO MAIN MENU		
SET ALARMS (A1, A2, A3)	✓	CURRENT ALARM 1 SET POINT FLASHES. PRESS ▲▼ TO CHANGE.	✓	PRESS ▲▼ TO SELECT ALARM ON DELAY (0 to 900 secs)	✓	PRESS ▲▼ TO SELECT ALARM OFF DELAY (0 to 900 secs)	✓	ALARM 1 RELAY CONFIGURATION DISPLAYED. PRESS ▲▼ TO SELECT 'F'=FALLING OR 'r'=RISING	✓	▶
	▶	PRESS ▲▼ TO SELECT 'E'=ENERGIZED OR 'd'=DE-ENERGIZED.	✓	PRESS ▲▼ TO SELECT 'L'=LATCHING OR 'n'=NON-LATCHING	✓	NEW ALARM SETTINGS CONFIRMED. RETURNS TO MAIN MENU. REPEAT FOR ALARM 2 & 3.				
SET FAULT RELAY (F)	✓	FIRST FAULT RELAY SETIING FLASHES. PRESS ▲▼ TO SELECT 'E'=ENERGIZED OR 'd'=DE-ENERGIZED.	✓	PRESS ▲▼ TO SELECT 'IF'=FAULT RELAY ACTION ON INHIBIT OR 'In'=NO ACTION ON INHIBIT.	✓	NEW FAULT RELAY SETTINGS CONFIRMED. RETURNS TO MAIN MENU				
SET PASSWORD (PAS)	✓	FIRST DIGIT OF CURRENT PASSWORD FLASHES. PRESS ▲▼ TO CHANGE FIRST DIGIT.	✓	SECOND DIGIT OF PASSWORD FLASHES. PRESS ▲▼ TO CHANGE SECOND DIGIT.	✓	THIRD DIGIT OF PASSWORD FLASHES. PRESS ▲▼ TO CHANGE THIRD DIGIT.	✓	NEW PASSWORD CONFIRMED. RETURNS TO MAIN MENU		
DISABLE (dIS)	✓	DISPLAY SHOWS 'dIS'	✓	LOWER LINE OF DISPLAY SHOWS 'OFF'. PRESS X AND ✓ SIMULTANEOUSLY FOR >1 SECOND TO TAKE UNIT OUT OF INHIBIT.						
FIELD INHIBIT (FIh)***	✓	PRESS ▲▼ TO SELECT 'Inh'= DETECTOR INHIBIT ON OR 'FAL' FOR DETECTOR INHIBIT OFF	✓	DETECTOR INHIBIT SETTING CONFIRMED. RETURNS TO MAIN MENU.		**NOTES:** Detector inhibit signal range = 1.5mA to 2.5mA. All steps in the respective menu option must be completed and ✓ pressed for the changes to be saved. Pressing X before confirmation of new settings returns to main menu with no changes to configuration. *See section 9 for available ranges and units. **If configuring the controller for use with an Oxygen detector, skip the 'Set zero' instructions and use 20.9% (background air oxygen level) as the span calibration point. ***Only available on mA input version				
DETECTOR TYPE (IP)***	✓	CURRENT DETECTOR INPUT TYPE FLASHES. PRESS ▲▼ TO SELECT '2L'= 2 WIRE mA OR '3L'=3 WIRE mA	✓	DETECTOR INPUT SETTING CONFIRMED. RETURNS TO MAIN MENU.						
▲▼	OK	▲▼	OK	▲▼	OK	▲▼	OK	▲▼	OK	

10 Ranges and Units

Below are the possible combinations of range and units for the two Unipoint Controller types:

Unipoint Controller	Units	Available Full Scale Ranges
mV or mA version	%LEL %VOL	2.00, 3.00, 5.00, 10.0, 15.0, 20.0, 25.0, 50.0 or 100
	PPM	2.00, 3.00, 5.00, 10.0, 15.0, 20.0, 25.0, 50.0, 100, 150, 200, 300, 400, 500 or 1000

11 Alarm Relay On/Off Delay

Part of the 'Set Alarms' configuration allows a user programmable delay for each alarm threshold between the detection of an alarm and the activation of the alarm relay output, and a programmable hold between the clearing of an alarm and the release of the relay output. The delay times are adjustable over the range 0 to 900 seconds (900sec equals 15mins). The default delay times are 0 (no delay).

WARNING
If an alarm relay activation delay set to greater than 0 secs the presence of a gas concentration in excess of the alarm threshold will not be immediately signaled.

11.1 Alarm Relay On Delay

The programmable alarm relay delay operates in the following manner:

- If the delay is set, then in the event of the **GAS CONCENTRATION EXCEEDING** the alarm threshold the following occurs:
    - The LCD, LED, and buzzer signal the alarm.
    - The alarm relay output does not signal the occurrence of the alarm immediately.
    - The delay counts down.
    - When the delay has expired, the relay output then signals the alarm.
- If during the delay the **GAS CONCENTRATION FALLS** below the alarm threshold and the alarm is configured as **NON-LATCHING**, the indication of the alarm on the LCD, LED, and buzzer is removed and the delay reset.
- If during the delay the gas **CONCENTRATION FALLS** below the alarm threshold and the alarm is configured as **LATCHING**, the indication of the alarm on the LCD, LED, and buzzer remains, the delay continues to run and the relay output is updated when the delay time has expired.
- If during the delay the **GAS CONCENTRATION IS ABOVE** the alarm threshold and the **ACCEPT/RESET INPUT/KEY** is activated to accept the alarm, the LCD, LED, and buzzer will respond as per section 7.4, the delay continues to run and the relay output is updated when the delay time has expired.
- If during the delay the **GAS CONCENTRATION FALLS BELOW** the alarm threshold, the alarm is configured as **LATCHING**, and the **ACCEPT/RESET EXTERNAL INPUT/KEY** is activated to reset the alarm, the LCD, LED, buzzer and the delay time reset.

- If during the delay the unit is placed into **INHIBIT** by either the external inhibit or by entering the configuration mode, the delay will be reset. On exiting the inhibit mode the relay output will be updated.
- If during the delay a **FAULT** is signaled, the delay will continue and the relay output updated when the delay time has expired. (The alarm will continue to be signaled on the sounder, LED, and LCD after the fault occurs. The relay output will be updated to reflect the alarm when the time expires.)

11.2 Alarm Relay Off Delay

The programmable alarm relay hold operates in the following manner.

- If the hold time is set, then in the event of the **GAS CONCENTRATION FALLING** below the alarm threshold after previously exceeding the alarm threshold for a period of time greater than the delay time (i.e. the relay output is reflecting the active alarm) and the alarm threshold is configured as **NON-LATCHING** the following occurs:
    - The LCD, LED, and buzzer will stop signaling the alarm.
    - The alarm relay does not signal the absence of the alarm immediately.
    - The hold time counts down.
    - When the hold time expires, the relay output is updated to signal the absence of the alarm.
- If during the hold time the gas **CONCENTRATION RISES** back above the alarm threshold, the LCD, LED, and buzzer signal the re-occurrence of the alarm and the hold time is reset.
- If during the hold time the **ACCEPT/RESET EXTERNAL INPUT/KEY** is activated, the relay output is updated immediately.
- If during the hold time the unit is placed into **INHIBIT** by either the external inhibit or by entering the configuration mode, the hold time is reset. On exiting the inhibit mode the relay output is updated immediately.
- If during the hold time a **FAULT** is signaled, the hold time is reset and the relay output is updated immediately.
- If the alarm is configured as **LATCHING**, the hold time has no affect upon the operation of the unit. i.e. The signaling of a latched alarm via the relay output will removed immediately the accept/reset external input/key is activated.

12 Maintenance

The Unipoint controller has no user serviceable parts. Honeywell Analytics recommend that the controller's configuration and operation are checked annually.

The gas detectors connected to the controller should be checked and if necessary zero and span calibrated by following the procedures detailed in their user guides.

13 Ordering Information

Unipoint Controllers

Unipoint Controller (mV input version)	2306B2000
Unipoint Controller (mA input version)	2306B1000

Spares

Unipoint Terminal Block Plug (x2)	2306B3010
Unipoint DIN rail socket kit	2306B3020
Unipoint power connector kit	2306B3030

14 Warranty Statement

All products are designed and manufactured to the latest internationally recognized standards by Honeywell Analytics under a Quality Management system that is certified to ISO 9001. As such Honeywell Analytics warrants its products against defective parts and workmanship and will repair or (at its option) replace any instruments which are or may become defective under proper use within 12 months from date of commissioning by an approved Honeywell Analytics representative or 18 months from date of shipment from Honeywell Analytics, whichever is the sooner. This warranty does not cover disposable batteries or damage caused by accident, abuse, abnormal operating conditions or poisoning of sensor.

Defective goods must be returned to Honeywell Analytics premises accompanied by a detailed description of any issue. Where return of goods is not practicable Honeywell Analytics reserves the right to charge for any site attendance where any fault is not found with he the equipment. Honeywell Analytics shall not be liable for any loss or damage whatsoever or howsoever occasioned which may be a direct or indirect result of the use or operation of the Contract Goods by the Buyer or any Party.

This warranty covers instrument and parts sold to the Buyer only by authorized distributors, dealers and representatives as appointed by Honeywell Analytics. The warranties set out in this clause are not pro rata, i.e. the initial warranty period is not extended by virtue of any works carried out there under.

15 Appendix A- Specification

Specification				
Use	The Zareba Unipoint controller provides integrators with a flexible and low cost solution to the many applications requiring flammable, toxic or oxygen gas detection to be incorporated into their control systems. Unipoint is designed to use industry standard DIN rail allowing it to be easily installed into many different types of plastic or metal, indoor or outdoor, hazardous or non hazardous area enclosures. It is designed for use with any mV flammable gas detector as well as any 2 or 3 wire 4-20mA gas detector (subject to overall power requirements).			
User interface				
Operation	Two pushbuttons for normal operation of resetting alarms and initiating self diagnostic test of system. Four buttons for user programmable functions via intuitive menu			
Backlit display	Units of measure, digital gas reading and event code			
Other indication	Ultra-bright steady/flashing LEDs subject to condition; alarm (red), power (green), fault (amber). In-built audible alarm 63dB at 0.3 meters.			
Termination	Easily accessible plug in screw type terminals. Terminals accept maximum wire diameter 1.5mm^2			
Environmental				
IP rating	IP30 (Install in suitable enclosure)			
Weight	225g (Controller only)			
Operational Temperature Humidity Pressure	 -10°C to +55°C / 14°F to 131°F 10 to 90%RH (non condensing) 90-110kPa			
Storage	-25°C to +60°C / -13°F to +140°F, 20 to 80%RH (non condensing)			
Inputs				
Supply	Nominal 24Vdc (18-32Vdc). Max power mV = 4.8W (including power to detector), mA= 3.0W (excluding power to 3 wire detector).			
Detector type	3 wire mV bridge e.g. Sensepoint or Signalpoint flammable gas detectors	2 wire, 4-20mA, loop powered e.g. Sensepoint or Signalpoint toxic or oxygen gas detectors	3 wire, 4-20mA, source output e.g. Sensepoint Plus and Pro flammable, toxic and oxygen gas detectors	
Detector supply	2.4-8.6V, 200mA constant current. Maximum loop resistance: 28 Ohms	Input (18-32Vdc)-1.5Vdc, 30mA max.	Input (18-32Vdc)-1.5Vdc, 0.5A max.	
Outputs				
Relays	Alarm 1	Alarm 2	Alarm 3	Fault
Rating	SPCO / 3A, 240Vac/30Vdc (non inductive load)	SPCO / 3A, 240Vac/30Vdc (non inductive load)	SPCO / 3A, 240Vac/30Vdc (non inductive load)	SPCO / 3A, 240Vac/30Vdc (non inductive load)
Default setting	Non Latching Normally de-energized Energize on alarm Factory setting 10%FSD	Non Latching Normally de-energized Energize on alarm Factory setting 25%FSD	Latching (mV) Non Latching (mA) Normally de-energized Energize on alarm Factory setting 50%FSD	Non Latching Normally energized De-energize on fault/power loss
User configurable options	Latching/non-latching Energized/de-energized Alarm trip point Rising/falling Alarm on / off delay (0 to 900 seconds)	Latching/non-latching Energized/de-energized Alarm trip point Rising/falling Alarm on / off delay (0 to 900 seconds)	Latching/non-latching Energized/de-energized Alarm trip point Rising/falling Alarm on / off delay (0 to 900 seconds)	Latching/non-latching Energized/de-energized
Approvals				
EMC/RFI	EN50270			
Electrical safety	EN61010			
Performance	ATEX measuring function EN61779 (Independent accreditation in progress). Check product label for ATEX certificate number.			
Other	CE, TUV.			

16 Notes

17 Notes

18 Notes

Find out more
www.honeywellanalytics.com

Customer business centre
Europe and the rest of the world
Honeywell Analytics AG
Wilstrasse 11-U11
CH-8610 Uster
Switzerland
Tel: +41 (0)44 943 4300
Fax: +41 (0)44 943 4398
sales@zelana.co.uk

Customer business center
Americas
Honeywell Analytics Distribution, Inc.
400 Sawgrass Corporate Pkwy
Suite 100
Sunrise, FL 33325
USA
Tel: +1 954 514 2700
Toll free: +1 800 538 0363
Fax: +1 954 514 2784
sales@zelana.com

www.honeywell.com

Please Note:
While every effort has been made to ensure accuracy in this publication, no responsibility can be accepted for errors or omissions.
Data may change, as well as legislation, and you are strongly advised to obtain copies of the most recently issued regulations, standards, and guidelines.
This publication is not intended to form the basis of a contract.
© 2005 Honeywell Analytics

Issue 6 7/2006
H_MAN0638_V3
2306-M-5001
© 2006 Honeywell Analytics

Honeywell

11197

3.1 WARNINGS:

- This apparatus is not suitable for use in oxygen enriched atmospheres (>21%V/V). Oxygen deficient atmospheres (<10%V/V) may suppress sensor output.
- Refer to local or national regulations relative to installation at the site.
- Operator should be fully aware of the action to be taken if the gas concentration exceeds an alarm level.
- SignalPoint should be protected from mechanical impact. Installation should consider not only the best placing for gas leakage related to potential leak points, gas characteristics and ventilation, but also where the potential of mechanical damage is minimized or avoided.

3.2 CAUTIONS

- Do not open when hazardous (explosive) gas is present.
- Atmospheres above 100% LEL may suppress the sensor reading.
- Do not modify or alter the sensor/enclosure construction, as essential safety requirements may be invalidated.
- Do not install in forced air ventilation systems. Do not insert conduit directly into SignalPoint box.
- Dispose of in accordance with local disposal regulations. Materials used are:
  Box: nylon
  Sensor: Fortron® (PPS-polyphenylene sulphide)
  Terminal block: polyester.

4.1 INSTALLATION

SignalPoint should be installed in a location free from dusts and direct heat sources. It must be fitted with a suitably approved M20 cable gland and installed in accordance with Exe principles. SignalPoint should be correctly installed before use. Cabling should be multicore, three wires minimum, of conductor size 2.5 mm^2 max. Installation must be on a flat solid surface.

Wiring connections are:-

The unit requires 200mA current with nominal 3V supply.

Installation and service are to be performed by a qualified installation engineer with the power disconnected.

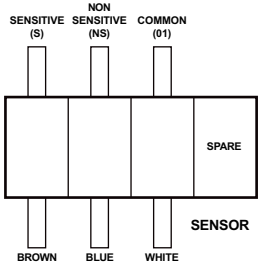

Disconnect the lid from the base by opening the closure to 180°, pressing and sliding the lid sideways off the base. Unscrew the grey plastic retainer and remove the sinter protection disk from the sensor. Replace it with a mesh screen. Replace the grey plastic retainer or fit the required accessory to the sensor screw thread. Affix the base to a flat solid surface using a No: 6 wood screw, or M3.5 screws in the holes (as shown on page 13). Reattach the lid by pushing the hinge inwards and upwards. Connect the wires to the terminal block as shown. Connect the external cable to the terminal block as shown. Close the lid ensuring that the wires are not trapped. Fix the lid to the base using the two M5 cap head bolts provided.

4.2 CALIBRATION

Prior to calibration, allow the sensor to warm up for approximately 10 minutes. Re-calibration should only be attempted by qualified service personnel.

First zero the control system with no gas present on the sensor. If combustible gas is suspected to be in the vicinity of SignalPoint, flow clean air over the sensor using a flow housing (see below).

Fit a flow housing and connect a cylinder of either air, for a zero, or a known concentration of gas in air, at approximately the alarm point (e.g. 50% LEL), to the flow housing. Pass the gas through the flow housing at a flow rate of approximately 1 l to 1.5 l per minute. Allow the sensor to stabilise. When gassing with air, adjust the control card to indicate zero. For span, the control card should be adjusted to indicate the concentration of the target gas being applied. Remove the flow housing and the gas supply.

Sensors should be calibrated at concentrations representative of those to be measured. It is always recommended that SignalPoint is calibrated with the target gas it is to detect. If this is not possible cross calibration can be used.

4.3 CROSS CALIBRATION PROCEDURE:

When the SignalPoint sensor is to be calibrated with a gas which is different to the gas/vapour to be detected, the following cross calibration procedure should be followed.

Table 1 lists gases according to the reaction they produce at the detector. An eight star (8*) gas produces the highest output while a one star (1*) gas produces the lowest output. (These are not applicable at ppm levels).

To calibrate the SignalPoint sensor, obtain the star rating for both the test gas and the gas to be detected from table 1. These values may then be used in table 2 to obtain the required meter setting when a 50% LEL test gas is applied to the detector.

If a sensor is to be used to detect a gas other than that for which it was calibrated, the required correction factor may be obtained from table 3. The meter reading should be multiplied by this number in order to obtain the true gas concentration.

IMPORTANT

- Since combustible sensors require oxygen for correct operation, a mixture of gas in air should be used for calibration purposes.
- Assuming an average sensor performance, the sensitivity information in tables 1 to 3 is normally accurate to ± 20%.

Table 1: Star Rating of Gasses

Gas	Star Rating	Gas	Star Rating
Acetone	4*	Hexane	3*
Ammonia	7*	Hydrogen	6*
Benzene	3*	Methane	6*
Butane	4*	Octane	3*
Diethyl ether	4*	Propan-2-ol	4*
Ethane	6*	Propane	5*
Ethanol	5*	Styrene	2*
Ethyl acetate	3*	Tetra hydrafuran	4*
Ethylene	5*	Xylene	2*

Table 2: Meter Settings

* Calibration Gas	* Rating of Gas to be Detected							
	8*	7*	6*	5*	4*	3*	2*	1*
8*	50	62	76	95	-	-	-	-
7*	40	50	61	76	96	-	-	-
6*	33	41	50	62	78	98	-	-
5*	26	33	40	50	63	79	100	-
4*	21	26	32	40	50	63	80	-
3*	-	21	26	32	40	50	64	81
2*	-	-	-	25	31	39	50	64
1*	-	-	-	-	25	31	39	50

Note:
These settings must only be used with a calibration gas concentration of 50% LEL.

Cross Calibration Example:

- Target gas to be detected is butane. Calibration gas available is methane (50% LEL).
- Look up star rating for each (Table 1): butane 4*, methane 6*
- Check the meter settings for 50% LEL calibration gas (Table 2).

The control card meter should, therefore, be set to 78% to give an accurate reading for butane, using 50% LEL methane as a calibration gas.

Table 3: Meter Multiplication Factors

Unit calibrated To Detect	Unit used to detect							
	8*	7*	6*	5*	4*	3*	2*	1*
8*	1.00	1.24	1.52	1.89	2.37	2.98	3.78	4.83
7*	0.81	1.00	1.23	1.53	1.92	2.40	3.05	3.90
6*	0.66	0.81	1.00	1.24	1.56	1.96	2.49	3.17
5*	0.53	0.66	0.80	1.00	1.25	1.58	2.00	2.55
4*	0.42	0.52	0.64	0.80	1.00	1.26	1.60	2.03
3*	0.34	0.42	0.51	0.64	0.80	1.00	1.27	1.62
2*	0.26	0.33	0.40	0.50	0.63	0.79	1.00	1.28
1*	0.21	0.26	0.32	0.39	0.49	0.62	0.78	1.00

4.4 FAULT FINDING

Sensor reads non zero all the time:
- gas could be present, ensure there is no combustible gas in the atmosphere.

Sensor reads non-zero when no gas is present:
- adjust the zero of the control system.

Sensor reads low when gas is applied:
- adjust the span of the control system.

Sensor reads high when gas is applied:
- adjust the span of the control system.

Sensor reads zero when gas is applied:
- check the wiring.
- check that the dust protection cap has been removed.
- check that the sinter is not obstructed.
- replace the sensor if poisoning is suspected.

5. MAINTENANCE

5.1 CHANGING FILTERS

Remove the grey plastic retainer, or accessory if fitted. Remove the old filter and replace it with a fresh filter. Replace the grey plastic retainer.

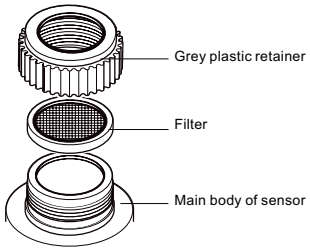

5.2 CHANGING THE SENSOR

Disconnect the lid assembly from the base by opening the closure to 180°, disconnecting the sensor wires, then pressing down on the hinge, and sliding the lid assembly sideways off the base.

Reattach the new lid assembly by pushing the hinge inwards and upwards. Reconnect the sensor wires.

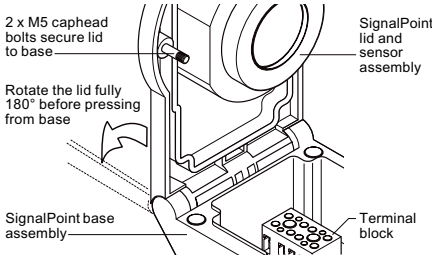

5.3 RESPONSE CHECKING

Use a gas test module to ensure that the sensor is operative. This is not a calibrated dose of gas.

APPENDIX A - SPECIFICATIONS

Operating temperature range:
-55°C to +80°C (see certification).
Operating humidity range:
20% to 90% RH continuous.
10% to 99% RH intermittent - non condensing.
Operating pressure range:
90 to 110 k Pa.
Warm up time:
no greater than 10 minutes.
Voltage range:
2.9 V to 3.5 V bridge (at 200mA).
Power consumption:
700mW.
Signal output:
mV bridge.
Calibration flow rate:
recommended between 1 and 1.5 l/min.
Poisoning:
the sensing elements may become inactive after extensive exposure to silicones, halogenated hydrocarbons, heavy metals or sulphur compounds.
Expected operating life:
5 years.
IP rating:
IP65 standard; IP66/67 with weather protection.
Certification:

Ex II 2G EExd IIC T6 -55 to +55°C.
Ex II 2G EExd IIC T5 -55 to +70°C.
Ex II 2G EExd IIC T4 -55 to +80°C.
BAS98ATEX2156X.
UL approved via IEC 79 (pending).

This product complies with the relevant CE standards concerning performance: EMC to BS EN50081 parts 1 & 2, BS EN50082 parts 1 & 2 and EN 50054.

APPENDIX B - GLOSSARY

Explosive gas atmosphere:
a mixture in air of combustible materials in the form of gas vapour or mist in which, after ignition, combustion spreads throughout the unconsumed mixture.

Lower explosive limit (LEL):
the volume of combustible gas or vapour in air below which an explosive gas atmosphere will not be formed.

Exd:
flame proof or explosion proof within the confines of European standards EN50014 and EN50018. An enclosure that can withstand the pressure developed during the internal explosion of an explosive mixture and which prevents transmission of the explosion to the explosive atmosphere surrounding the enclosure.

Exe:
increased safety within the confines of European standards EN50014 and EN50019 applied to electrical apparatus that does not produce arcs or sparks in normal service, in which additional measures are applied so as to give increased security against the possibility of excessive temperatures.

PPS:
polymer polyphenylene sulphide, suitable for use in most chemical environments (eg acids, aldehydes, ketones, alkalies, petroleum, aromatic hydrocarbons, alcohols, ethers, esters and most chlorinated hydrocarbons). Avoid immersion in solvents for extended periods. For further details contact Zellweger Analytics Ltd.

Certification label as defined in directive 94/9/EC

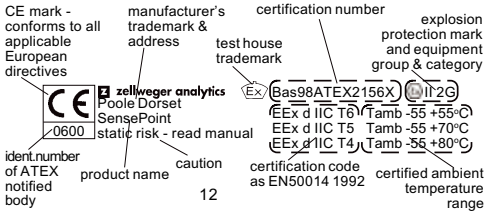

APPENDIX C - MAIN FEATURES

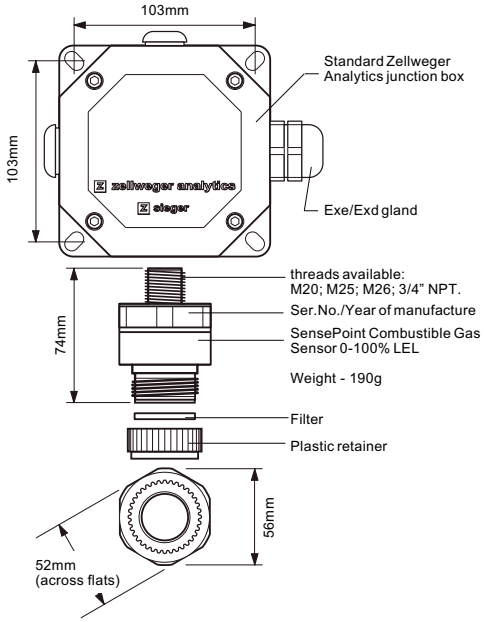

APPENDIX D - SPARE PARTS

Sensor 2106B1200 (M20)

Sensor 2106B1201 (M25)

Sensor 2106B1202 (M26)

Sensor ..... 2106B1204(3/4 NPT)

Weather protection 02000-A-1640

Sensor filter 00780-F-0018

Flow housing 02000-A-1645

Collecting cone 02000-A-1642

Junction box (std) 00780-A-0100

High temperature junction box 555-090-038

High temperature weather protection 00780-A-0076

To reorder a complete new sensor, see the label on the product leads, or contact Zellweger Analytics Ltd.

MAN0513.P65 Issue 06 - 04/99
2106M0501

sieger

SENSEPOINT

operating instructions

SensePoint LEL Combustible Sensor

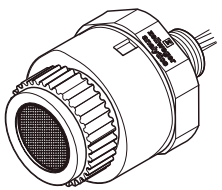

zellweger analytics

CONTENTS

1. **INTRODUCTION** 2

2. **ASSOCIATED DOCUMENTATION** 2

3. **SAFETY** 3

3.1 Warnings 3
3.2 Cautions 3

4. **OPERATIONS** 4

4.1 Installation 4
4.2 Calibration 5
4.3 Fault finding 9

5. **MAINTENANCE** 10

5.1 Changing filters 9

Appendix A - Specifications 11

Appendix B - Glossary 12

Appendix C - Main features 13

Appendix D - Spare parts 14

1. INTRODUCTION & 2. ASSOCIATED DOCUMENTATION

1. INTRODUCTION

SensePoint is a sealed disposable sensor for the detection of flammable gases and is designed for use with an approved junction box.

It employs a catalytic pellistor sensor device which is used as part of a bridge measuring circuit.

Sensepoint is certified for hazardous areas to EN50018 and is protected against water and dust ingress to IP66/67.

The sensor is available in M20, M25, M26 or 3/4 NPT thread versions. All accept accessories from the specified range.

2. ASSOCIATED DOCUMENTATION

2106M0502 SensePoint Technical Handbook.

Refer to the relevant control system manual for connection information.

FRANCE
Zellweger Analytics SA
33 rue de Ballon
ZI des Richardets
F-93165 Noisy le Grand
Cedex
France
Tel: (33) 01 48 15 80 80
Fax: (33) 01 48 15 80 00

GERMANY
Zellweger Analytics GmbH
Sollner Strasse 65b
D-81479 Munchen
Germany
Tel: (49) 89 791 920
Fax: (49) 89 791 9243

ITALY
Zellweger Analytics srl
Via F. Primaticcio 168
1-20147 Milano
Italy
Tel: (39) 48300436
Fax: (39) 48302314

UNITED KINGDOM
Zellweger Analytics Ltd
Parsonage Road
Takeley
Bishop's Stortford
Herts
CM22 6PU, U.K.
Tel: (44) 1279 870182
Fax: (44) 1279 870377

SINGAPORE
Zellweger Analytics Ltd
Asia Pacific Regional Office
30, Tech Park Crescent
Singapore 638102
Tel: (65) 862 7701
Fax: (65) 862 3858

SPAIN
Zellweger Analytics SA
Avda Remolar 31
08820 El Prat de Llobregrat
Barcelona
Spain
Tel: (34) 3 379 9611
Fax: (34) 3 379 8551

USA
Zellweger Analytics Inc
(Sieger Division)
405 Barclay Blvd
Lincolnshire
Illinois 60069,USA
Tel: (1) 847 913 0015
Fax: (1) 847 634 1371
E-mail: sieger@zelana.com

INTERNATIONAL HQ
Zellweger Analytics Ltd
Hatch Pond House
4 Stinsford Road
Nuffield Estate
Poole
Dorset
BH17 0RZ, UK
Tel: (44)1202 676161
Fax: (44)1202 678011
E-mail: postmaster@
zellweger-analytics.co.uk

MIDDLE EAST
Zellweger Analytics
Middle East Regional Office
PO Box 52196
Karama-Bur Dubai UAE
Tel: (971) 4 360940
Fax: (971) 4 345802

NETHERLANDS
Imbema Analytics BV
Maurisstraat 1-7
Postbus 160
2000 AD Haarlem
Netherlands
Tel: (31) 23 517 2424
Fax: (31) 23 5318040

This publication is not intended to form the basis of a contract, and the company reserved the right to amend the design and specification of the instruments without notice.

zellweger analytics

3.1 WARNINGS

- This apparatus is not suitable for use in oxygen enriched atmospheres (>21%V/V). Oxygen deficient atmospheres (<10%V/V) may suppress sensor output.
- Refer to local or national regulations relative to installation at the site.
- Operator should be fully aware of the action to be taken if the gas concentration exceeds an alarm level.
- SensePoint should be protected from mechanical impact. Installation should consider not only the best placing for gas leakage related to potential leak points, gas characteristics and ventilation, but also where the potential of mechanical damage is minimized or avoided.

3.2 CAUTIONS

- Atmospheres above 100% LEL may suppress the sensor reading.
- Do not modify or alter the sensor construction as essential safety requirements may be invalidated.
- Install using certified Exe or Exd junction box, connectors and glanding.
- Dispose of in accordance with local disposal regulations. Materials used -Fortron® (PPS- Polyphenylene Sulphide).

4.1 INSTALLATION

The SensePoint must be fitted into a suitably approved Exe or Exd junction box fitted with a suitably approved cable gland. This should be correctly installed before use. Cabling should be multicore, three wire minimum, of conductor size 2.5 mm^2 max.

The sensor should be fitted into a threaded hole within the junction box and locked in place with a lock nut. Ensure that junction box thread is compatible with sensor thread.

The sensor should be installed in a location free from direct heat sources. It should be fitted such that it either points downwards or horizontally. It is not recommended that the sensor points upwards. See the technical handbook for installation in forced air conditions.

Wiring connections are:-

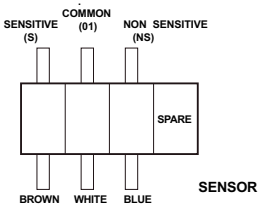

The unit requires 200mA current with a nominal 3V supply.

Installation and service are to be performed by a qualified installation engineer with the power to the sensor disconnected.

4.2 CALIBRATION

Prior to calibration, allow the sensor to warm up for approximately 10 minutes. Re-calibration should only be attempted by qualified service personnel.

First zero the control system with no gas present on the sensor. If combustible gas is suspected to be in the vicinity of SensePoint, flow clean air over the sensor using a flow housing (see below).

Fit a flow housing and connect a cylinder of either air, for a zero, or a known concentration of gas in air, at approximately the alarm point (e.g. 50% LEL), to the flow housing. Pass the gas through the flow housing at a flow rate of approximately 1 l to 1.5 l per minute. Allow the sensor to stabilise. When gassing with air, adjust the control card to indicate zero. For span, the control card should be adjusted to indicate the concentration of the target gas being applied. Remove the flow housing and the gas supply.

Sensors should be calibrated at concentrations representative of those to be measured. It is always recommended that SensePoint is calibrated with the target gas it is to detect. If this is not possible, then cross calibration can be used.

For calibration in fast flow conditions see the technical handbook.

4.3 CROSS CALIBRATION PROCEDURE

When the SensePoint sensor is to be calibrated with a gas which is different to the gas/vapour to be detected, the following cross calibration procedure should be followed.

Table 1 lists gases according to the reaction they produce at the detector. An eight star (8*) gas produces the highest output while a one star (1*) gas produces the lowest output. (These are not applicable at ppm levels.)

To calibrate the SensePoint sensor, obtain the star rating for both the test gas and the gas to be detected from table 1. These values may then be used in table 2 to obtain the required meter setting when a 50% LEL test gas is applied to the detector.

If a sensor is to be used to detect a gas other than that for which it was calibrated, the required correction factor may be obtained from table 3. The meter reading should be multiplied by this number in order to obtain the true gas concentration.

IMPORTANT

- Since combustible sensors require oxygen for correct operation, a mixture of gas in air should be used for calibration purposes.
- Assuming an average sensor performance, the sensitivity information in tables 1 to 3 is normally accurate to ± 20%.

Table 1: Star Rating of Gasses

Gas	Star Rating	Gas	Star Rating
Acetone	4*	Hexane	3*
Ammonia	7*	Hydrogen	6*
Benzene	3*	Methane	6*
Butane	4*	Octane	3*
Diethyl ether	4*	Propan-2-ol	4*
Ethane	6*	Propane	5*
Ethanol	5*	Styrene	2*
Ethyl acetate	3*	Tetra hydrafuran	4*
Ethylene	5*	Xylene	2*

Table 2: Meter Settings

* Calibration Gas	* Rating of Gas to be Detected							
	8*	7*	6*	5*	4*	3*	2*	1*
8*	50	62	76	95	-	-	-	-
7*	40	50	61	76	96	-	-	-
6*	33	41	50	62	78	98	-	-
5*	26	33	40	50	63	79	100	-
4*	21	26	32	40	50	63	80	-
3*	-	21	26	32	40	50	64	81
2*	-	-	-	25	31	39	50	64
1*	-	-	-	-	25	31	39	50

Note: These settings must only be used with a calibration gas concentration of 50% LEL.

Cross Calibration example:

- The target gas to be detected is Butane. The calibration gas available is Methane (50% LEL).
- Look up the star rating for each gas (Table 1): Butane 4*, Methane 6*
- Check the meter settings for 50% LEL calibration gas (Table 2).
- The control card meter should therefore be set to 78% to give an accurate reading for Butane, using 50% LEL Methane as a calibration gas.

Table 3: Meter Multiplication Factors

Unit calibrated To Detect	Unit used to detect							
	8*	7*	6*	5*	4*	3*	2*	1*
8*	1.00	1.24	1.52	1.89	2.37	2.98	3.78	4.83
7*	0.81	1.00	1.23	1.53	1.92	2.40	3.05	3.90
6*	0.66	0.81	1.00	1.24	1.56	1.96	2.49	3.17
5*	0.53	0.66	0.80	1.00	1.25	1.58	2.00	2.55
4*	0.42	0.52	0.64	0.80	1.00	1.26	1.60	2.03
3*	0.34	0.42	0.51	0.64	0.80	1.00	1.27	1.62
2*	0.26	0.33	0.40	0.50	0.63	0.79	1.00	1.28
1*	0.21	0.26	0.32	0.39	0.49	0.62	0.78	1.00

4.3 FAULT FINDING

Sensor reads non zero all the time:

- gas could be present, ensure there is no combustible gas in the atmosphere.

Sensor reads non zero when no gas is present:

- adjust the zero of the control system.

Sensor reads low when gas is applied:

- adjust the span of the control system.

Sensor reads high when gas is applied:

- adjust the span of the control system.

Sensor reads zero when gas is applied:

- check the wiring.
- check that the dust protection cap has been removed.
- check that the sinter is not obstructed.
- replace the sensor if poisoning is suspected.

5.1 CHANGING FILTERS

- Remove the grey plastic retainer or accessory.

- Remove the old filter and replace with a fresh filter.

- Replace the grey plastic retainer or accessory.

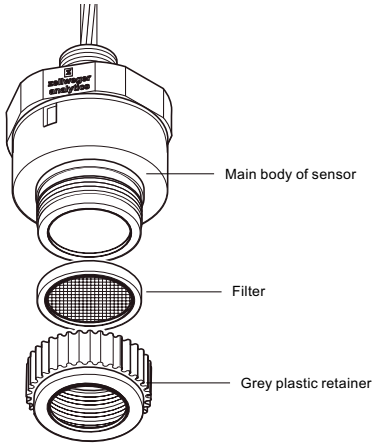

APPENDIX A - SPECIFICATIONS

Operating temperature range:
-30°C to +40°C.
Operating humidity range:
20% to 90% RH continuous.
10% to 99% RH intermittent - non condensing.
Operating pressure range:
90 to 110 k Pa.
Warm up time:
no greater than 10 minutes.
Voltage range:
2.9 V to 3.5 V bridge (at 200mA drive current).
Power consumption:
700mW.
Signal output:
mV bridge.
Calibration flow rate:
recommended between 1 and 1.5 l/min.
Poisoning:
the sensing elements may become inactive after extensive exposure to silicones, halogenated hydrocarbons, heavy metals and sulphur compounds.
Expected operating life:
5 years.
IP rating:
IP54 for indoor applications.
Certification:
Ex II 2G EEx ed IIC T4 -30 to +40°C.
BAS98ATEX2085X.

This product complies with the relevant CE standards concerning performance: EMC to BS EN50081 part 1, BS EN50082 part 1 and EN 50054.

APPENDIX B - GLOSSARY

Explosive gas atmosphere:
a mixture in air of combustible materials in the form of gas vapour or mist in which, after ignition, combustion spreads throughout the unconsumed mixture.

Lower explosive limit (LEL):
the volume of combustible gas or vapour in air below which an explosive gas atmosphere will not be formed.

Exd:
flame proof or explosion proof within the confines of European standards EN50014 and EN50018. An enclosure that can withstand the pressure developed during the internal explosion of an explosive mixture and which prevents transmission of the explosion to the explosive atmosphere surrounding the enclosure.

Exe:
increased safety within the confines of European standards EN50014 and EN50019 applied to electrical apparatus that does not produce arcs or sparks in normal service, in which additional measures are applied so as to give increased security against the possibility of excessive temperatures.

PPS:
polymer polyphenylene sulphide, suitable for use in most chemical environments (eg acids, aldehydes, ketones, alkalais, petroleum, aromatic hydrocarbons, alcohols, ethers, esters and most chlorinated hydrocarbons). Avoid immersion in solvents for extended periods. For further details contact Zellweger Analytics Ltd.

Certification label as defined in directive 94/6/EC

See under Appendix D.

APPENDIX C - MAIN FEATURES

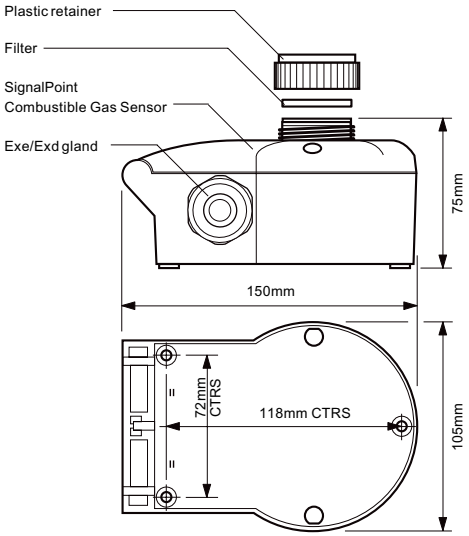

The underside of the Signalpoint Sensor showing position of mounting holes

APPENDIX D - SPARE PARTS

Lid and sensor assembly 2106B1130

Weather protection 02000-A-1640

Sensor filter 00780-F-0018

Flow housing 02000-A-1645

To re-order a complete new unit see the label on the product, or contact Zellweger Analytics Ltd.

Certification label as defined in directive 94/6/EC

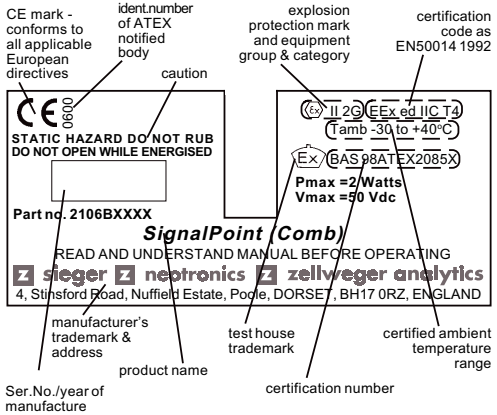

CONTENTS

1. INTRODUCTION 2

2. ASSOCIATED DOCUMENTATION 2

3. SAFETY 3

3.1 Warnings 3
3.2 Cautions 3

4. OPERATIONS 4

4.1 Installation 4
4.2 Calibration 5
4.3 Cross-calibration procedure 5
4.4 Fault Finding 8

5. MAINTENANCE 9

5.1 Changing Filters 9
5.2 Changing the sensor 10
5.3 Response checking 10

Appendix A - Specifications 11

Appendix B - Glossary 12

Appendix C - Main features 13

Appendix D - Spare parts 14

1. INTRODUCTION & 2. ASSOCIATED DOCUMENTATION

1. INTRODUCTION

SignalPoint is a sensor with an integral junction box. It is for the detection of combustible gases in light industrial and commercial applications.

SignalPoint employs a catalytic pellistor sensor device which is used as part of a Wheatstone bridge measuring circuit.

SignalPoint is certified for hazardous areas to EN50014, EN50018, EN50019 and is protected against water and dust ingress to IP54 for indoor, non-aggressive environments.

2. ASSOCIATED DOCUMENTATION

2106M0504 SignalPoint Technical Handbook.

Refer to the relevant control system manual for connection information.

SIEMENS

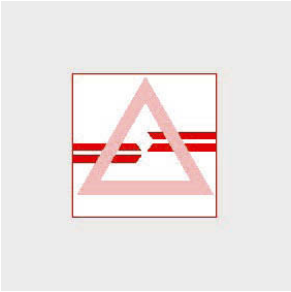

Tripping Facility for Close-and-Retain System FSA20

Configuration, Installation, Commissioning and Maintenance

Version August 2009

Copyright and trademarks

All products referred to by name are trademarks or registered trademarks of the respective companies.

Copyright © Siemens AG I BT DE FS SYS DE 2005-2009.

All rights reserved.
Subject to availability, technical modifications reserved.

All the names of hardware and software products referred to are trade names and/or trademarks of the respective manufacturer.

Overview

Introduction

Safety information

Configuration

Installation

Commissioning and preventive maintenance

Annex

Contents

1 Introduction ... 1
1.1 About this document ... 2
1.2 More information ... 3
1.2.1 Information in the internet or intranet ... 3
1.2.2 Training courses ... 3
1.3 Symbols and markers used ... 4

2 Safety information ... 5
2.1 Technical regulations ... 6
2.2 Installation ... 6

3 Configuration ... 7
3.1 General information ... 8
3.2 Selecting the detector type ... 8
3.3 Positioning the detectors ... 8
3.4 List of elements approved by DIBt (German institute for building technology) ... 11
3.4.1 Fire alarms ... 11
3.4.2 Magnetic clamps ... 12
3.4.3 Door closers ... 13
3.5 Siting ... 13

4 Installation ... 15
4.1 Overview ... 16
4.2 Power supply ... 18
4.3 Wiring ... 18
4.4 Detector line ... 18
4.5 Using more than one magnetic clamp P_{total} > 6 W ... 21
4.6 Activating hold-open mechanisms with their own power supply ... 22
4.7 EX line connection ... 24
4.8 Maintenance ... 25

5 Commissioning ... 27
5.1 Preparatory work ... 28
5.2 Starting up ... 28
5.3 Checks to be performed after the initial installation ... 29

6 Maintenance and regular checks ... 31

7 Appendix ... 33
7.1 Technical data ... 34
7.2 Certificate of conformity ... 35
7.3 Test reports ... 36

Illustrations ... 39

Tables ... 40

Abbreviations ... 40

Index ... 41

1

Introduction

1.1 About this document 2
1.2 More information 3
1.2.1 Information in the internet or intranet 3
1.2.2 Training courses 3
1.3 Symbols and markers used 4

The tripping facility for close-and-retain systems serves to hold automatically closing fireproof / smokeproof doors open and to close them securely in the event of a fire.

1.1 About this document

These instructions are intended for qualified electricians local to the region in which the equipment is installed, for instance:

- Installation personnel
- Startup operators
- Maintenance personnel

The personnel charged with installing and commissioning the system must be properly trained. There are training courses available.

In chapter 1, “Introduction”, you will find general information about this manual and further details.

In chapter 2 you will find important safety information.

Chapter 3, “Configuration”, contains information about configuring the system.

Chapter 4, “Installation”, contains all the necessary information for installing and connecting the FSA20 tripping facility for close-and-retain systems.

Chapter 5, “Commissioning”, contains all the necessary information for commissioning the FSA20 tripping facility for close-and-retain systems.

Chapter 6, “Maintenance and regular checks”, contains all the necessary information for maintaining and performing regular checks of the FSA20 tripping facility for close-and-retain systems.

Chapter 7, “Annex”, contains useful documentation such as jumper settings and a form for calculating the required power.

This manual does not attempt to provide complete and detailed information on every variant of the product, nor every conceivable variation of installation, commissioning or maintenance, as this would render it wholly unmanageable.

If you would like further information or encounter a particular problem or problems not sufficiently addressed in the manual, please request the details you need from your local Siemens office or the Customer Support Center on +49 89/ 9221 – 8000
Please also be aware that the contents of this manual do not constitute part of any prior or existing agreement, undertaking or legal relationship and is not intended to alter any of these. The only obligations that apply to Siemens are derived from the relevant contract of sale, which also contains the full and exclusive terms of the warranty. The contents of the manual neither extend nor restrict these contractual warranty requirements.

1.2 More information

1.2.1 Information in the internet or intranet

One important source of information about the FSA20 tripping facility for close-and-retain systems is the collected documentation, in which you will find brief descriptions, product sheets, operating instructions, etc., in the form of PDF files. The information in the standard collection is continuously being expanded and updated.

You will find the collected documentation in Siemens' intranet “STEB Web Client” at the following address:

Company / Organization	URL
I BT	https://workspace.sbt.siemens.com/content/00001123/Pages/STEPWebClient.aspx

General information concerning Siemens Building Technologies and danger alarm control and indicating panels may be found on the internet at:

Company / Organization	URL
I BT DE	https://intranet.sbt.siemens.de/page.asp?nid=611
I BT DE version archive	https://intranet.sbt.siemens.de/page.asp?nid=793

Further relevant information and guidelines may be found at:

Company / Organization	URL
VdS (accident prevention)	http://www.vds.de/
Association of the German electrical and electronics industry (ZVEI)	http://www.zvei.org/
German institute for building technology	http://www.dibt.de/

1.2.2 Training courses

The personnel who install and commission the systems receive all the necessary information and instruction in special training courses.

These training courses are offered by the Training Center.

Details of available training courses are published on the Siemens intranet at:

https://intranet.sbt.siemens.de/page.asp?nid=622

1.3 Symbols and markers used

Marker or symbol	Explanation
1. Operating steps	Instructions for procedural steps are numbered in sequence.
● Lists	List entries are preceded by bullets.
Important information	Important information is shown in bold to distinguish it from the remaining text.
`http://www.siemens.de`	Texts, such as internet addresses, that you need to enter verbatim, are formatted in the font “Courier New”.
Note	Hints and recommendations are preceded by this symbol and shown on a colored background.
Warning	Information that you should be sure to read is preceded by this symbol and shown on a colored background.
See chapter XY	Chapter references are preceded by this symbol and shown on a colored background.

2

Safety information

2.1 Technical regulations 6
2.2 Installation 6

2.1 Technical regulations

The following regulations apply within the Federal Republic of Germany. Users in other countries must be sure to comply with all applicable local regulations.

Close-and-retain systems **must** be set up in compliance with the **guidelines for hold-open systems** (version dated October 1988) **issued by the German institute for building technology DIBt**, which is an institution incorporated under public law. (Here the term “set up” is understood to include: configuration, installation, commissioning and maintenance).

Close-and-retain systems can also be set up to comply with DIN EN 14637.

Extract from DIN EN 14637:

Planning:

Planning of individual installations of close-and-retain systems in specific buildings and selection of the elements thereof should be performed only by experts or trained personnel. Instructions provided by manufacturers of the close-and-retain system / trigger mechanism should be followed precisely. The planning office is responsible for selecting the appropriate close-and-retain system.

Installation:

The installation and assembly of the close-and-retain system at the building site must be carried out by specialists who are familiar with all the necessary tasks and relevant regulations. The procedure must comply with the instructions provided by the manufacturer of the close-and-retain system / trigger mechanism.

The installation contractor is responsible for the proper installation of the close-and-retain system.

2.2 Installation

Always lay power cables and control cables inside cable ducts. Ensure that clips are positioned in such a way that they do not constitute a trip hazard .

3

Configuration

3.1 General information 8
3.2 Selecting the detector type 8
3.3 Positioning the detectors 8
3.4 List of elements approved by DIBt (German institute for building technology) 11
3.4.1 Fire alarms 11
3.4.2 Magnetic clamps 12
3.4.3 Door closers 13
3.5 Siting 13

3.1 General information

The FSA20 close-and-retain system S24211-B243-A1 possesses one input from the detector activation, one output for controlling the magnetic clamps, an external signal input from a fire alarm control center, inputs and outputs to the power supply, one potential-free contact and one input and output for connecting control electronics.

When planning and implementing a hold-open system in compliance with the guidelines issued by the German institute for building technology (DIBt) you may use only the elements listed in section 3.4 “List of elements approved by DIBt (German institute for building technology)”.

3.2 Selecting the detector type

Where possible, smoke detectors should be used for close-and-retain systems.

Which type of smoke detector is appropriate will depend on how any fire at the installation location is likely to develop:

If a fire is likely to begin by smoldering then scattered light smoke detectors should be used. In this case you should be aware that this type of detector can also be triggered by dust.

Scattered light smoke detectors should not be installed in areas where dust is to be expected.

In areas where the usual working or manufacturing processes involve smoke or similar aerosols (e.g. dust) that might trigger a false alarm, heat detectors should be used.

3.3 Positioning the detectors

Where the following instructions call for “ceiling detectors”, these should be installed immediately underneath the lower surface of the ceiling above the doorway.

The horizontal distance between the detector and the wall containing the doorway that is to be protected must be at least 0.5m and at most 2.5m.

Where a false ceiling is installed the detector should either be positioned on the load-bearing ceiling (= bare ceiling) or on the false ceiling at the point at which a fire may be expected to first produce the greatest concentration of smoke.

False ceilings with a fire protection rating are generally so impermeable that smoke will spread below them; false ceilings that are purely for decoration generally permit smoke to pass through them.

The number and type of smoke detectors will depend on the distance between the top of the doorway and the ceiling.

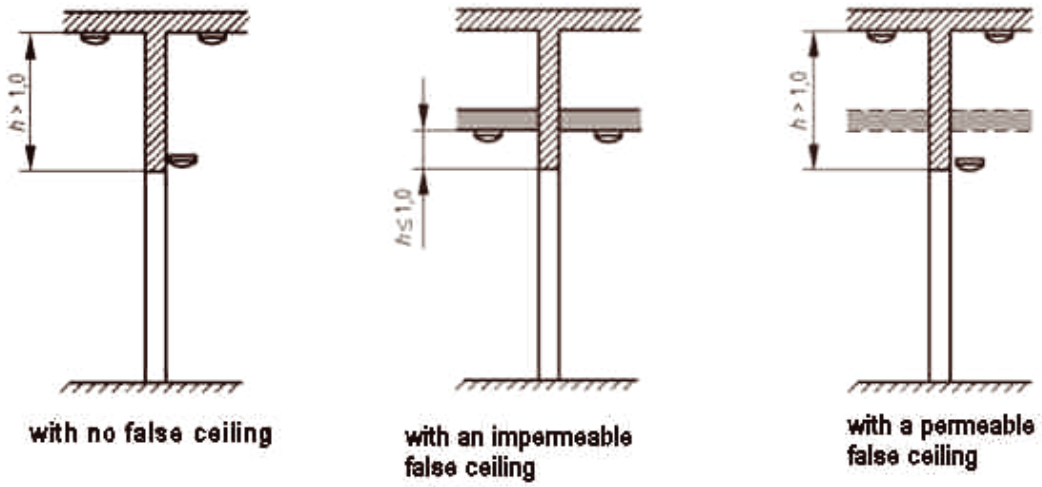

Figure 1: Types of ceiling and critical measurements

We calculate the number of detectors needed by assuming that one detector can cover an area of 16m². This means that doorways wider than 4.0m may need additional fire alarms or pairs of alarms in order to cover the full width.

In general there should be at least one ceiling detector in each of the two rooms bordering on the doorway that is to be protected – i.e. a pair of detectors is required – plus at least one mounted on one side of the lintel above the doorway.
If the underside of the ceiling on both sides of the doorway in question is no more than 1.0m above the top of the doorway then lintel-mounted smoke detectors can be dispensed with.

If the doorway is no wider than 3.0m and closed by a swing door then it will be sufficient to install one smoke detector on the lintel.

Where a lintel-mounted detector is installed it should be placed directly on the wall above the doorway, no more than 0.1m above the lower edge of the lintel.

Detectors that are suspended from the ceiling (pendulum detectors) or fastened to cantilevers in such a way that the distance between the axis of the detector and the wall is greater than the approximate diameter of the detector base (cantilever detectors), and other detectors that are not mounted in the above-mentioned areas, are not included when calculating the number of detectors required.

If the false ceiling is more than 5m above the top of the doorway then the corresponding ceiling detectors should be replaced by detectors attached to 0.5m cantilevers attached at least 3.5m above the upper edge of the doorway.

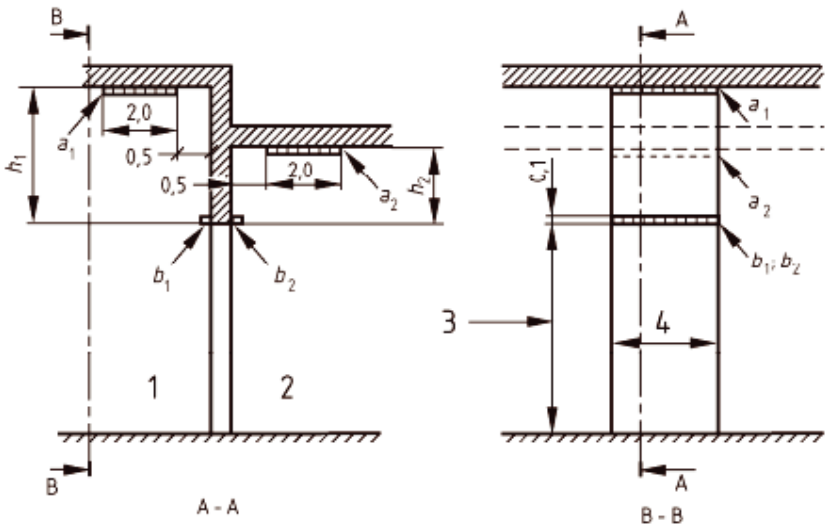

Figure 2: Installation areas

Legend

1 Room 1

2 Room 2

3 Height of doorway

4 Width of doorway

Row	Distance from ceiling to bottom of lintel	Installation area (b=b_1 or b_2)	Minimum number of detectors required [3]
1	h_1 and/or h_2 > 1.0m	a_1 and a_2 and b	Two ceiling detectors and one lintel detector
2	h_1 and h_2 ≤ 1.0m	a_1 and a_2	Two ceiling detectors
3	As for row 2, but for swing doors with doorway up to 3m wide	b	One lintel detector or two ceiling detectors

[3] A greater number of detectors may be required for rows 1 and 2 depending on the width of the doorway

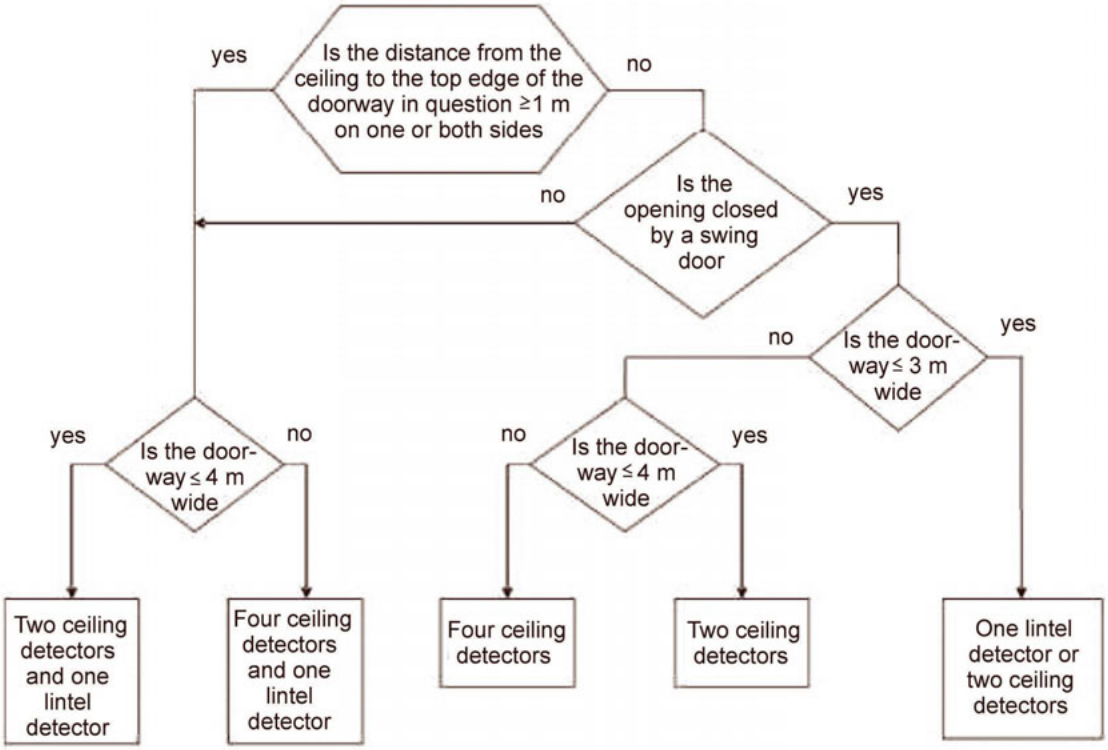

Figure 3: Decision diagram for determining how many detectors are required

3.4 List of elements approved by DIBt (German institute for building technology)

Only elements approved by the DIBt may be used for hold-open systems for fire and smoke protection doors.

3.4.1 Fire alarms

Type designation	Article number	Remarks
Smoke detectors that can be connected directly to the FSA20 tripping facility		
BR12		BR12 Ex zones 1 and 2
SDF200	S24218-F401-A2	Detector holder SPF600 S24218-F400-A1
DO1101A	GBI:1493002	Fire alarm base DB1101A (EX) GBI:1486365
DO 1101A-Ex	S24218-F410-A1	Zones 1 and 2; in combination with DC1192 and SB3
FDOOT241-9	A5Q00004813	FDB201 alarm base collective A5Q00003814
Heat sensors that can be connected directly to the FSA20 tripping facility		
SDT210	S24218-F402-A2	Detector holder SPF600 S24218-F400-A1
DT1102A	S24218-F403-A1	Fire alarm base DB1101A (EX) GBI:1486365
DT1101A -Ex	S24218-F411-A1	Zones 1 and 2; in combination with DC1192 and SB3
FDOOT241-9	A5Q00004813	A2R, A2S useable for rooms up to 6m high

Type designation	Article number	Remarks
Controlled externally by the fire alarm control center via freely assignable control outputs from loopable detectors		
SDF1200		To be triggered externally by the SIGMASYS fire alarm control center
SDF2200		To be triggered externally by the SIGMASYS fire alarm control center
SDF3100		To be triggered externally by the SIGMASYS fire alarm control center
SDF3500		To be triggered externally by the SIGMASYS fire alarm control center
FDO221		To be triggered externally by the FDnet fire alarm control center
FDO241		To be triggered externally by the FDnet fire alarm control center
FDOOT221		To be triggered externally by the FDnet fire alarm control center
FDOOT241-8		To be triggered externally by the FDnet fire alarm control center
FDOOT241-9		To be triggered externally by the FDnet fire alarm control center
DOT1152A		To be triggered externally by the CS114x fire alarm control center
DO1152A		To be triggered externally by the CS114x fire alarm control center
DT1152A		To be triggered externally by the CS114x fire alarm control center

Table 1: Fire alarms

3.4.2 Magnetic clamps

Type designation	Manufacturer	Power consumption P [W]	Remarks
GT42R..	Neue Hahn Magnet	1.5	
GT50R..	Neue Hahn Magnet	1.5	
GT60R..	Neue Hahn Magnet	1.5	
GT63R..	Neue Hahn Magnet	1.5	
GT70R..	Neue Hahn Magnet	1.5	
GTR50R (Ex)	Neue Hahn Magnet	3.0	Zones 1 and 2
GTR70R 050.01 Ex	Neue Hahn Magnet	3.0	Zones 1 and 2
1315 V	MENVIER CSA S.r.l.	1.2	
1330 V	MENVIER CSA S.r.l.	1.2	
1335 V	MENVIER CSA S.r.l.	1.2	
1340 V	MENVIER CSA S.r.l.	3.0	
1345 V	MENVIER CSA S.r.l.	3.0	
1350 V	MENVIER CSA S.r.l.	1.2	
1360 V	MENVIER CSA S.r.l.	3.0	
1369 V	MENVIER CSA S.r.l.	1.2	
13707/15 V	MENVIER CSA S.r.l.	1.2	
1370/30 V	MENVIER CSA S.r.l.	1.2	
1380/15 V	MENVIER CSA S.r.l.	3.0	
1380/30 V	MENVIER CSA S.r.l.	3.0	

Table 2: Magnetic clamps

3.4.3 Door closers

Type designation	Manufacturer	Power consumption P [W]	Remarks
TS 73 EMF	Dorma	2.0	
TS 73 EMF / S	Dorma	2 x 2.0	
TS 73 FLT	Dorma	2.0	
BTS 80 EMB	Dorma	2.3	
BTS 80 EMB / S	Dorma	2 x 2.3	
BTS 80 FLB	Dorma	2.3	
TS 93 EMF	Dorma	1.6	
TS 93 GSR / EMF 1	Dorma	2 x 1.6	
TS 93 GSR / EMF 2	Dorma	2 x 1.6	
ITS96	Dorma	2.0	
TS99 FL	Dorma	1.4	
TS550E	Geze	3.0	
TS550E-IS	Geze	3.0	
TS4000E	Geze	1.0	
TS4000EFS	Geze	1.0	
TS4000E-IS	Geze	2 x 1.0	
TS5000E	Geze	2.2	
TS5000E-IS	Geze	2 x 2.2	
Door closers with automatic opening mechanism			
CD200	Dorma	2.5	No power is drawn from the trigger mechanism of an FSA20 hold-open system
CD400	Dorma	2.5	

Table 3: Door closers

3.5 Siting

Please note the following considerations:

- Install the tripping facility for a hold-open system in a serviced room and ensure that it is protected against harmful environmental factors such as direct sunlight, vibration from nearby operations, dust, etc.
- Never install the FSA20 tripping facility near to radiators or washbasins. Avoid the proximity of possible sources of electrical or mechanical interference. Always ensure adequate heat dissipation before installing the FSA trigger mechanism in a recess or other enclosed space or under a cover.
- The ambient temperature for the control center should lie between 0°C and +50°C. The maximum acceptable sustained atmospheric humidity is 75%, with 95% being tolerable for short periods (no condensation).
- Use a dedicated circuit with an easily identifiable fuse (“red”) for the AC power supply.
- You should comply with the following standards and regulations as well as the generally applicable provisions (DIN VDE 0100, etc.):
  - EN 14637
  - Construction requirements issued by building inspectorates, in particular the DIBt’s guidelines for hold-open systems

4

Installation

4.1 Overview 16
4.2 Power supply 18
4.3 Wiring 18
4.4 Detector line 18
4.5 Using more than one magnetic clamp P_{total} > 6 W 21
4.6 Activating hold-open mechanisms with their own power supply 22
4.7 EX line connection 24
4.8 Maintenance 25

4.1 Overview

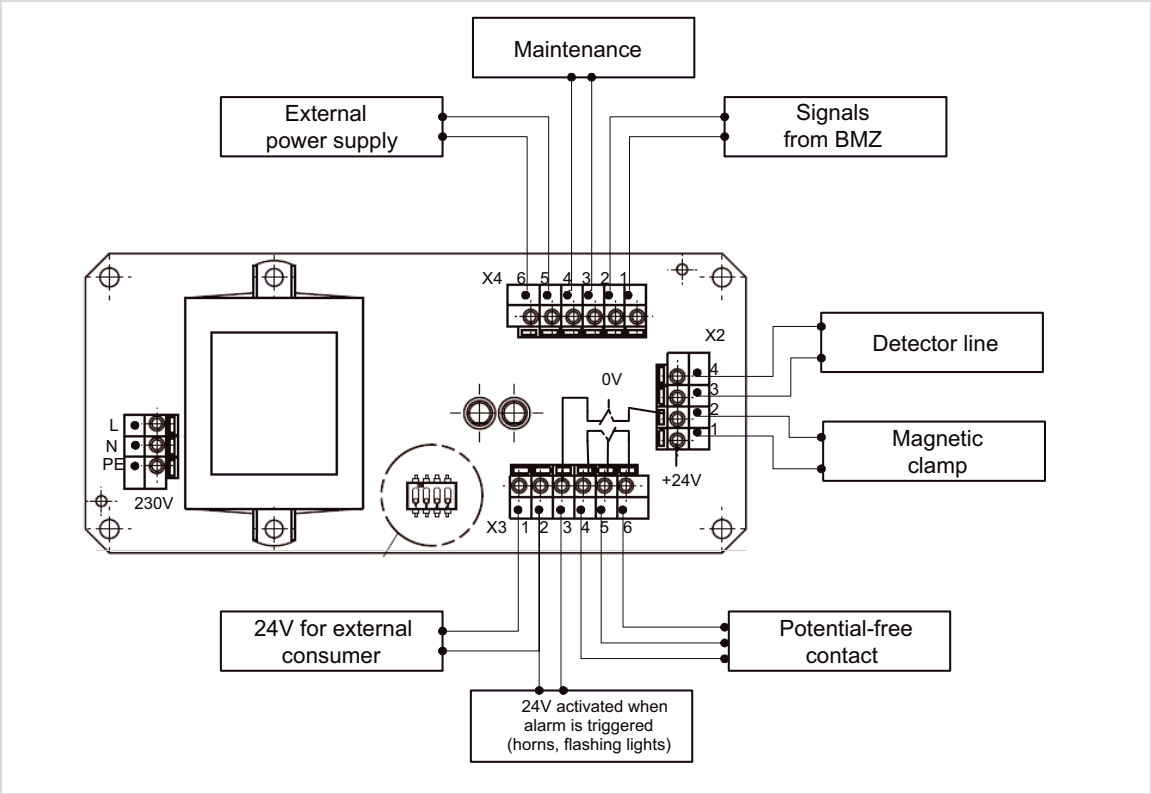

Figure 4: Overview of the possible connections

Row	T.	Designation			Remarks
X1	L	Phase	230 V +10% -15%	15 VA	
	N	Zero conductor			
	PE	Equipotential ground			No function
X2	1	Magnetic clamp +	24 V + -10%	6 W 250 mA	Line resistance at most 5Ω
	2	Magnetic clamp -			
	3	Detector line + (a)	21 V +- 10%		Line resistance at most 10Ω, 10nF
	4	Detector line - (b)			
X3	1	For external consumers	0 V	< 250 mA	Total current for magnetic clamps and external consumers at most 250 mA
	2	A for external consumers B for horn and flashing light together with X3 Kl.3	24 V +-10%		
	3	Horn and flashing light	0 V	< 250 mA	
	4	Potential-free contact	NO (in operation NC)	Max 2 A	In operation the relay is closed
	5	Potential-free contact	C		
	6	Potential-free contact	NC (in operation NO)		
X4	1	Controlled by the fire alarm control center	0 V - (b)	2-20 mA	Controlled by the detector output
	2	Controlled by the fire alarm control center	< +28 V + (a)		
	3	Maintenance			On
	4	Maintenance			Off
	5	External power input	0 V	500 mA	Fuse rating max. 500 mA
	6	External power input	+22.4 V to +26.4 V		

Table 4: Terminal assignment

External power supply

If an external power source is to be used then it must have building standards approval: if necessary an individual acceptance should be obtained. This power supply must deliver an output voltage in the range 22.4V to 26.4V.

Controlled externally by the control center

In this case the equipment is controlled from a fire alarm control center (BMZ).

See section 4.4 Detector line .
Switch 2 (Figure 5) must be set to “OFF” for this purpose.

Detector line

Up to ten fire alarms using threshold value technology (collective) can be connected to the monitored detector line.
An S24218-G44-A1 line terminator is required.

See section 4.4 Detector line

Magnetic clamp

Magnetic clamps are connected here, 24V, not exceeding 250mA (6W)

Potential-free contact

This contact switches when the alarm is triggered. In a state of rest the relay is always energized.
This is used to activate hold-open systems that have their own power supply, e.g. Dorma ED200/CD400, and to switch off resources or convey the trigger event to a control center.

24 V activated when triggered

This 24 V output can be used to control horns, flashing lights or relays.

24 V for external consumers

External consumers, such as a detector heater or an Ex line coupler, can be connected here.

The parameterization switch

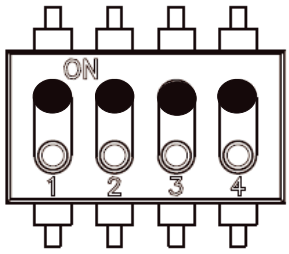

Switches	ON	OFF
1	**Maintenance deactivated**	See section 4.8
2	**External control center control OFF**	External control center control ON
3	**Automatic reset**	Manual reset
4	**24 s reset time**	70 s reset time

Figure 5 Parameterization switch

When the equipment is first delivered all the switches (Figure 5) are set **ON**.

Maintenance

You can prevent the magnets from being triggered during maintenance operations by disconnecting the internal signal evaluation (see chapter 4.8 on page 25).

4.2 Power supply

The FSA20 tripping facility is powered at 230V +10% -15%.

Its power consumption is 15 VA.

The 230 V power input of the FSA20 tripping facility is secured with an 80 mA fuse.

4.3 Wiring

Before connecting the power supply you should make sure that the cable is not live. Turn off the fuse and secure it (label it) to prevent it from being switched back on.

The terminals of the FSA20 tripping facility can accommodate wires of up to 1.5 mm² cross-section.

You should preferably use unscreened cables such as IYY n x 0.8 or NYM 3 x 1.5 mm².

The supplied screwed cable gland is used to convey the 230 V input lead into the housing at the 230 V connector on the front. Strip about 30 mm of the sheathing and about 7mm of insulation from each of the wires and then connect it up as follows:

blue to N; black to L; yellow / green to PE

Ensure that the power supply to the FSA20 tripping facility cannot be interrupted inadvertently when other equipment is switched off. Place a notice describing the location of the mains fuse (low voltage distributor number / mains fuse number) in the vicinity of the FSA20 trigger mechanism. Ensure that the fuse is easily accessible.

Only one wire may be clamped into each of the terminals of the FSA20 trigger mechanism. If you need to attach more than one wire to a terminal you should use additional terminals.

4.4 Detector line

Automatic fire alarms (terminal X2, connectors 3/4)

Up to ten fire alarms can be connected to a detector line to trigger the FSA20.

Because the line is monitored, the FSA20 will activate if:

- Signaled by the fire alarm
- Malfunction in the detector line (broken wire, short-circuit).

A red LED lights up when the FSA20 is triggered by the detector line.
The last alarm on the line must be terminated with an S24218-G44-A1 terminator.

The procedure for connecting up the detectors is described in the installation instructions.

Triggering by hand:

The FSA20 can be triggered manually by means of a pushbutton that opens detector line X2 connectors 3/4.

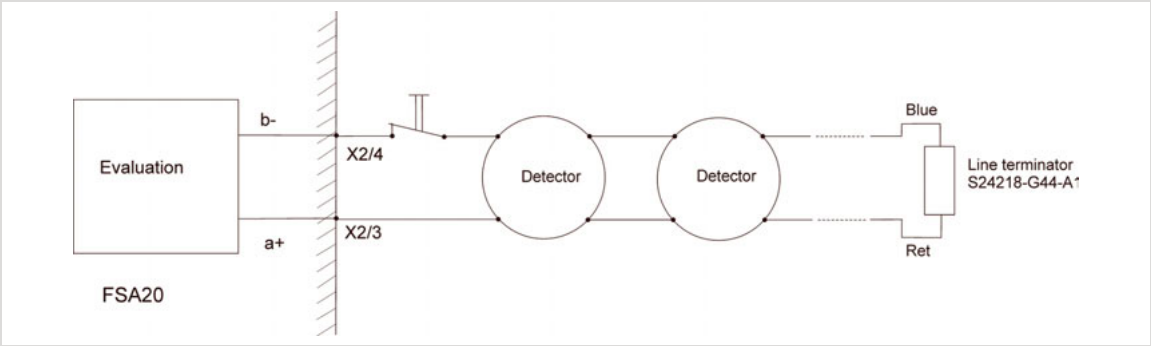

Figure 6: Circuit for the manual trigger

The pushbutton can be installed at any point of the detector line.

Activation by the fire alarm control center (terminal X4, connectors 1/2)

Alternatively or as well as via detector line X2, connectors 3/4, the FSA20 can also be activated by means of a suitable control signal from the fire alarm control center (BMZ).

You activate triggering by the fire alarm control center by setting switch 2 (Figure 5) to OFF.

Connectors 1 and 2 of terminal X 4 are polarized, i.e. connector 2 of terminal X4 is the positive pole of the input, which is decoupled via an optocoupler.

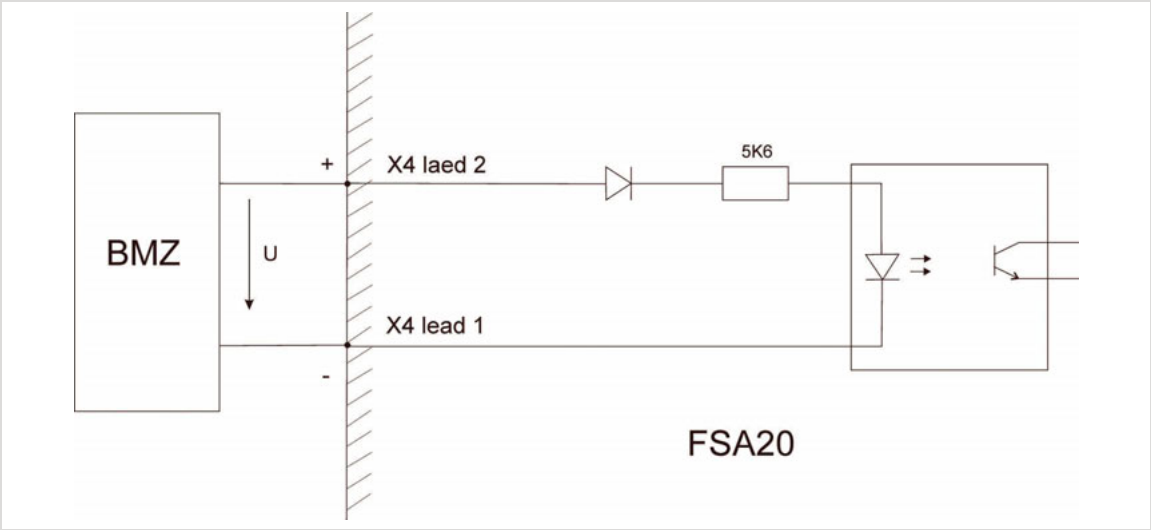

Figure 7: Activation by the fire alarm control center

No SPF5100 control module is required when the device is triggered by a detector output on the fire alarm systems FS20, Algorex and SIGMASYS. The function performed by this module is integrated into the FSA20.

The input operates according to the closed-circuit current principle, i.e.:

- Current = inactive
- No current = active

When no current is flowing, power to the magnet on X2 connectors 1/2 is switched off and the alarm LED lights up.

Automatic reset

You can use switch 3 (Figure 5) to activate or deactivate the automatic reset. Here ON indicates the automatic function. Any departure of the detector line from its inactive state leads to the following sequence of activities:

- The current passing through the magnet is interrupted depending on the reset time selected by switch 4 (Figure 5).
- The detector line retains power for ca. 8 seconds after the occurrence of the event to enable the LED in the triggered detector to light up.
- During the next ca. 8 seconds power to the detector line is switched off and the line is discharged via an internal 1k resistor.

Manual reset

You can alternatively switch over to manual reset by putting switch 3 (Figure 5) in the OFF position. In this case, any departure of the detector line from its inactive state will lead to the following sequence of activities:

- The current passing through the magnet is interrupted for at least the period specified by switch 4 (Figure 5).
- If the detector line's departure from its inactive state continues, then this period is continually restarted. The detector line itself receives current throughout, but the magnet output does not.
- The LED of the triggered automatic detector remains lit.
- The triggered detector must be reset by hand by interrupting its power supply using a pushbutton installed by the customer in the detector line. If you operate DOOT241-9 fire detectors, then we recommend short circuiting the line while the button is pressed so that it is discharged. For this to work the button will need to be pressed for a sufficient length of time (several seconds).
- After the button has been pressed, the red LED on the FSA20 remains lit for ca. 24 seconds, or for up to ca. 70 seconds if a longer reset time is specified (see switch 4 Figure 5). Only then is power returned to the magnet output.

The reset button can also be used as a manual trigger (see Figure 6).

4.5 Using more than one magnetic clamp P_{total} > 6 W

If you wish to connect a number of magnetic clamps with a total power of P_{total}, between 6W and 12W (at 24V), then you can connect two FSA20s together.

None of the magnetic clamps may consume more than 6W.

The connection is symmetrical. This means that the magnetic circuit of FSA20/1 can be interrupted by the potential-free contact of FSA20/2, and the magnetic circuit of FSA20/2 can be interrupted by the potential-free contact of FSA20/1.

It follows that either FSA20 can independently and equally trigger both double circuits.

Either FSA20 can be triggered by its detector line or its external controls (see sections 4.1 to 4.4).

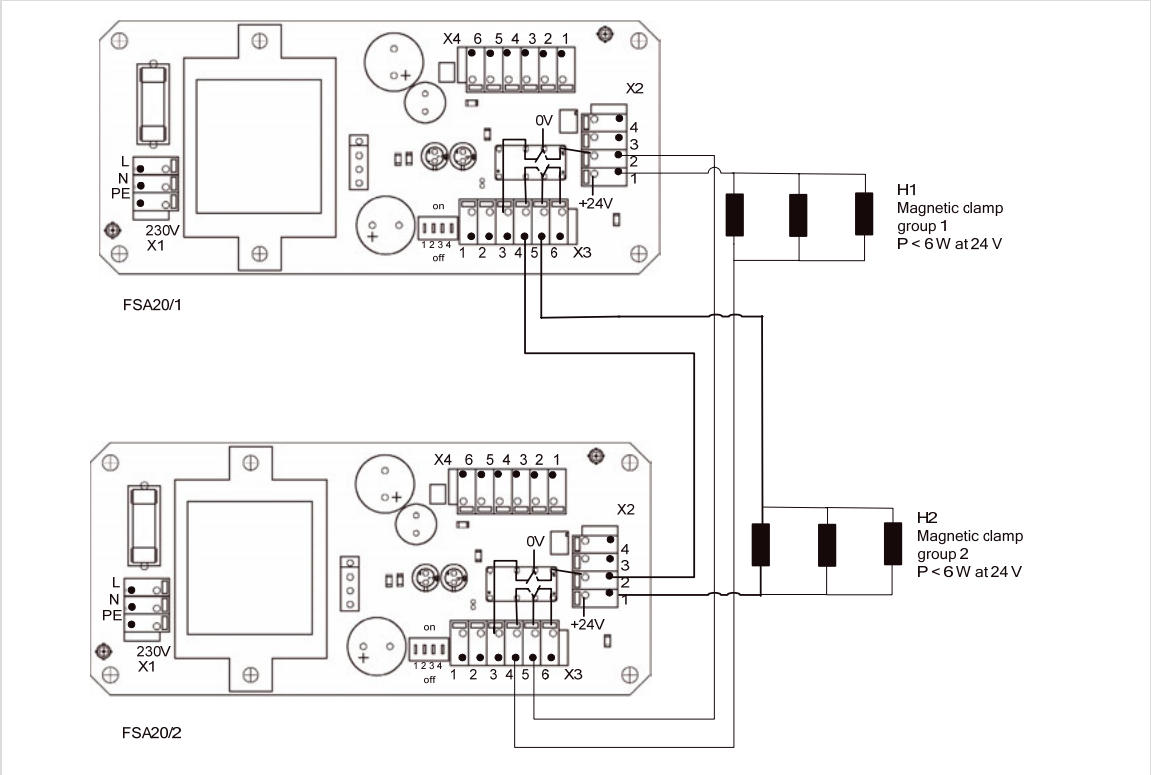

Figure 8: Connection of two FSA20 tripping facilities

4.6 Activating hold-open mechanisms with their own power supply

Hold-open mechanisms that possess their own power supply, such as the Dorma ED200 or Dorma CD400, can be triggered via the potential-free contact. The circuits are shown in the following table and Figure 9 to Figure 11

Device	FSA20	Dorma ED200 A/B	ED400
Connector	X3/4	X1/6	X2/10
	X3/5	X1/5	X2/9

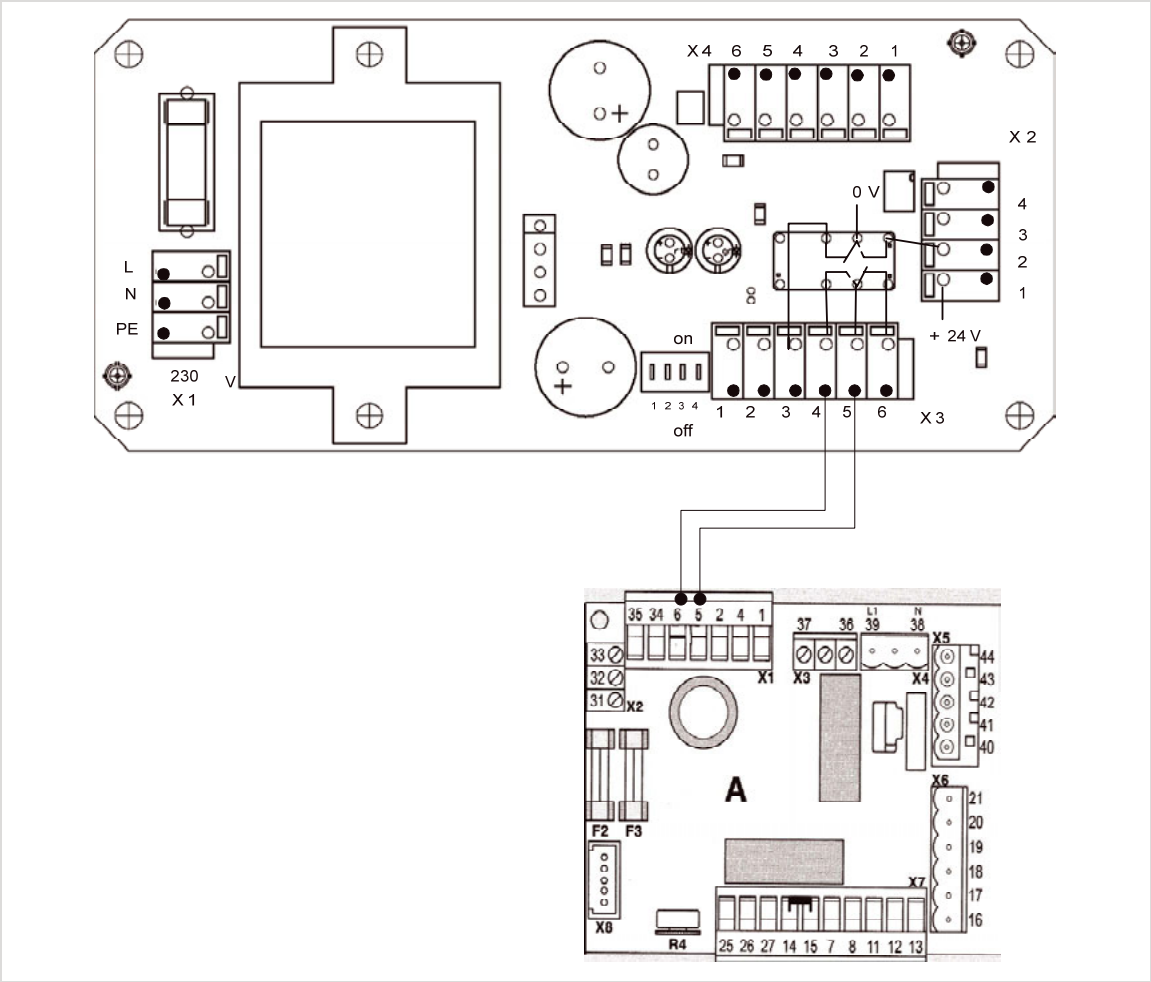

Figure 9: Dorma ED200 type A

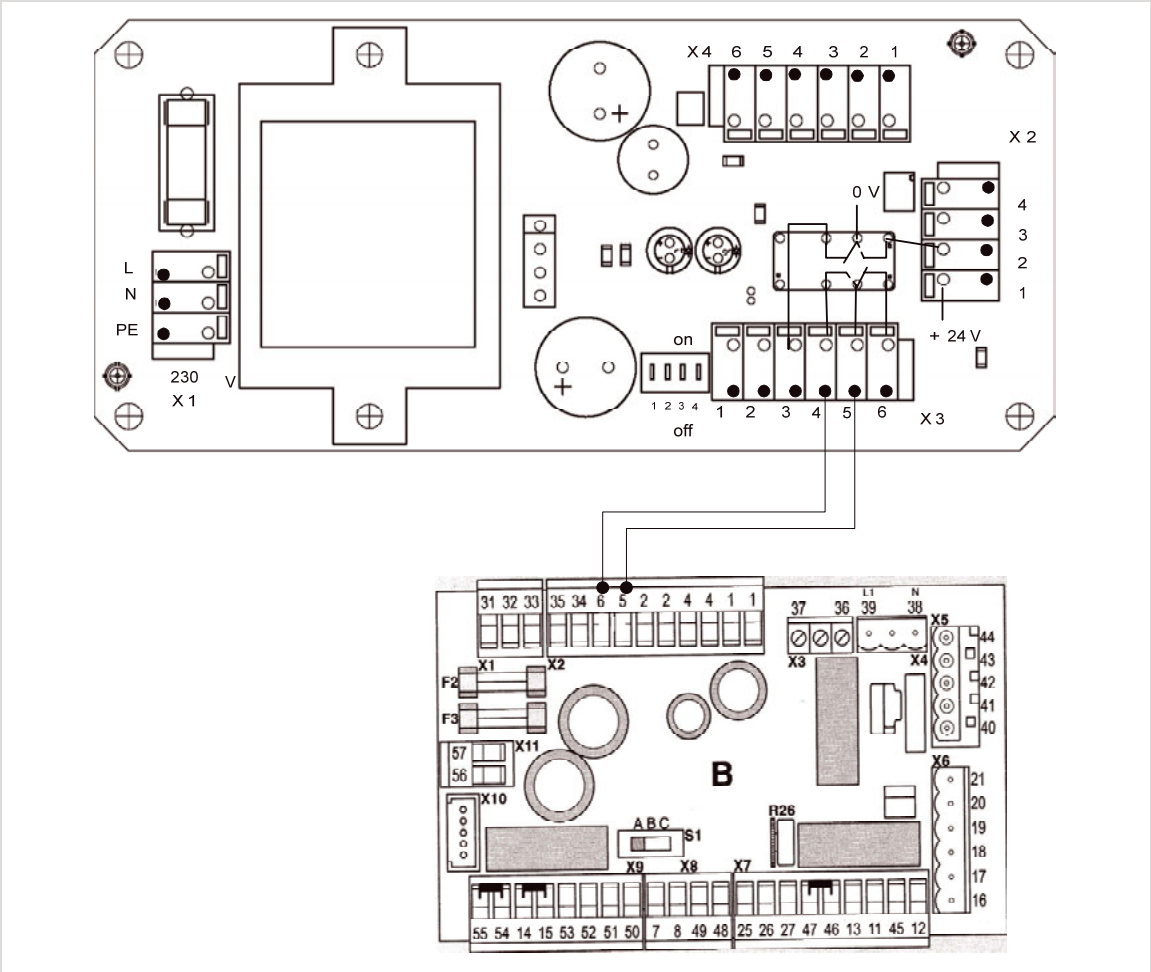

Figure 10: Dorma ED200 type B

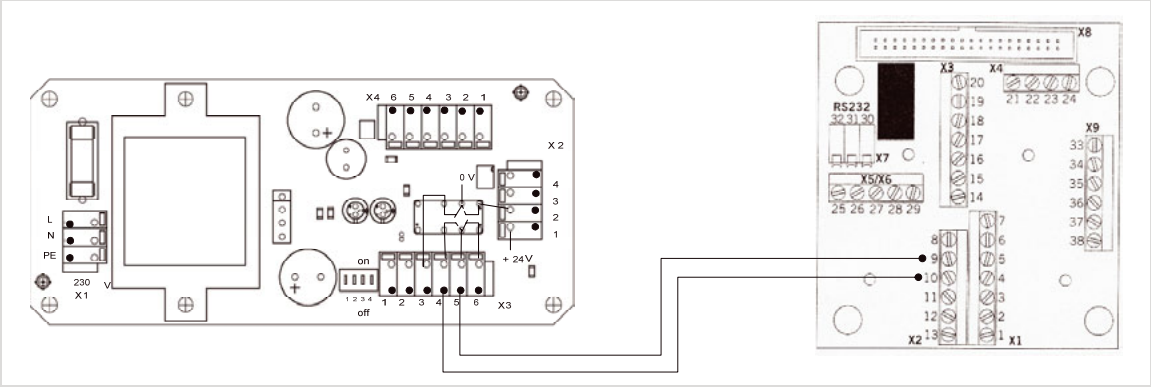

Figure 11: Dorma CD400

4.7 EX line connection

In the case of rooms in which an explosive atmosphere due to combustible gases, fumes or aerosols may arise, doors should be fitted with hold-open systems ONLY if these can also be triggered by gas detectors. The gas warning system and hold-open system must be electrically compatible. All elements, components and cables used in hold-open systems installed in such rooms must be intrinsically safe.

The connection to the Ex smoke detector DO 1101A-Ex goes via the input/output module DC1192A and the safety barrier SB3.

The DC1192A is powered from the FSA20 tripping facility (X3 Kl.1= 0V and X3 Kl.2= 24V). At most ten EX detectors may be connected, and an EOL22 (Ex) should always be used as line terminator.

The unit can be controlled by the gas warning system using a static current at 12 … 28V from that system via the input “external control BMZ” (X4 terminals 1 and 2) of the FSA20 tripping facility.

For details of the installation process for Ex areas please refer to the document:

Fire alarms in areas subject to explosion hazards

Basics; Applications; Installation; Maintenance

A24205-A331-A292 version 2 (2/02)

Warning: activation of the input/output module DC1192A functions only with a long reset time; FSA20 S4=OFF

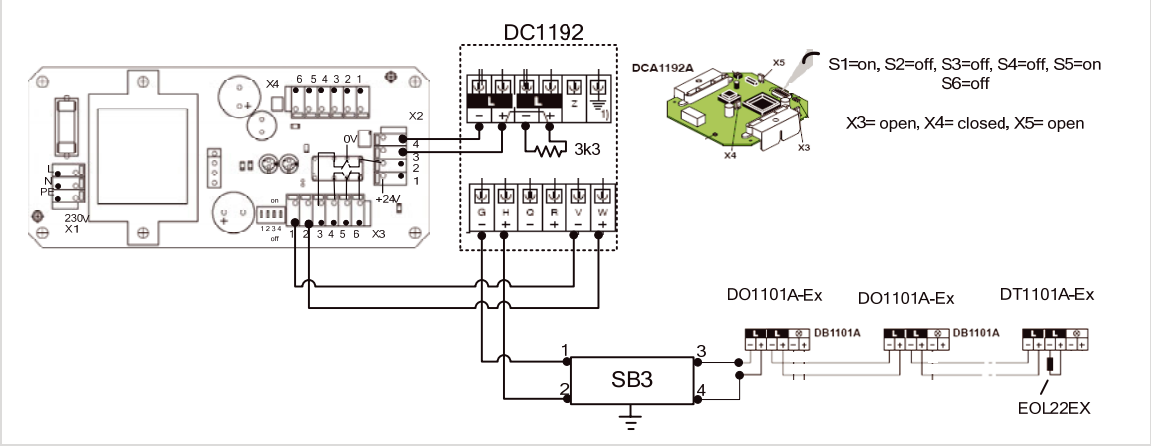

Do not connect the screening to the DCA1192A circuit unit (potential problems)

DC1192A switch settings:
S1=on, S2=off, S3=off, S4=off, S5=on, S6=off, X3=open, X4=closed, X5=open

Figure 12: FSA20 with Ex line activation

4.8 Maintenance

In certain maintenance situations it may sometimes be necessary to pass a continuous current through the magnetic clamps. This can be achieved using connectors 3/4 of X4.

When operating in this state, switch 1 (Figure 5) should be set to OFF.

Terminal X4: if required a switch can be looped in between connectors 3 and 4.

Terminal X4, connectors 3 and 4	Function of the magnet output
Connectors 3 and 4 are linked	Normal function of the FSA20
Connector 4 open, connector 3 via 5k6 to +24V	Magnet permanently receiving current
Connectors 3 and 4 are open	Magnet OFF

Table 5: Terminal X4, function of connectors 3 and 4

N.B.:

In normal operation switch 1 (Figure 5) should always be set ON and connectors 3/4 on terminal X4 should be unassigned.

5

Commissioning

5.1 Preparatory work 28
5.2 Starting up 28
5.3 Checks to be performed after the initial installation 29

5.1 Preparatory work

Before the unit is taken into operation you should make sure of the following:

Activation	Jumper / switch
No trigger from the BMZ	Switch 2 set ON factory setting
No detector line connected	3k3 resistor 1) (alternatively a line terminator: wire red to X2 terminal 3 and blue to X2 terminal 4)
Maintenance	Switch 1 set ON factory setting
Maintenance	Switch 1 set OFF

1) Factory setting: if a detector line is connected then the resistor should be removed.

Check that all cables are properly connected.

The mains feed must be taken into the unit via the supplied screwed cable gland to the 230 V terminals on the side wall and this installation should be checked to be correct.

All other connections must be laid separately from the mains feed. Cables should enter directly at the terminals.

When the FSA20 trigger mechanism is operated with an external power supply then the mains connection is not required.

The external power supply input must be protected with a T500 mA fuse before the FSA20 tripping facility.

5.2 Starting up

If it has been correctly installed, then when the power supply is switched on the green LED should be lit and the red LED should be off.

If the red LED is lit, this indicates that the unit is being activated via the detector line or the BMZ input.

The red LED lights up when the detector line is incorrectly connected or when a detector has triggered an alarm.
The red LED is triggered in the event of a short-circuit. When the short-circuit has been cleared the red LED will go out and the magnetic clamp will again be permanently supplied with power.

5.3 Checks to be performed after the initial installation

When the hold-open system is installed and ready for operation at the place at which it is to be used, its correct function and properly regulation-compliant installation must be confirmed by means of acceptance tests.

The manufacturers of trigger mechanisms and hold-open mechanisms must stress the necessity of these tests, and operators must arrange for them to be performed.

Acceptance tests may be performed only by expert technicians employed by manufacturers of trigger mechanisms and hold-open mechanisms, expert technicians authorized by them, or expert technicians from a test laboratory appointed for the purpose.

The acceptance tests must cover at least the following points:

1. The installed equipment comprising the hold-open system must agree with the equipment specified in the relevant approval document.

2. The labeling of the installed equipment must agree with the labeling specified in the approval document.

3. The interaction of the equipment must be verified on the basis of the approval document, whereby the unit must be triggered both by simulating the characteristics of a fire of the type which the detectors were designed to detect, and by manual activation.

4. The test must verify whether the mechanism for independent closing is enabled in the event the hold-open system becomes unable to function (e.g. by the removal of a detector or a power outage).

Once the acceptance tests have been successfully carried out, the operator must permanently mount, on the wall near to the installed hold-open system, a sign provided by the manufacturer, measuring 105 mm x 52 mm and carrying the following information: Hold-open system accepted by . . . . . (company logo and month and year of the acceptance).

The following checks must be performed on the detector line:

Check / Activity	Result
Trigger each detector once.	Red LED lights up. Magnet releases and door closes. Controls such as horns are activated. A report is passed to the detector control center.
Remove and replace each detector in the detector line.	Red LED lights up. Magnet releases and door closes. Controls such as horns are activated. A report is passed to the detector control center.
Briefly press the manual pushbutton in the detector line (if present)	Red LED lights up. Magnet releases and door closes. Controls such as horns are activated. A report is passed to the detector control center.

The following checks must be performed on the magnetic clamp:

Check / Activity	Result
Briefly press the manual pushbutton or activate an automatic detector.	Magnet releases and door closes. Controls such as horns are not activated. No report is passed to the detector control center.
	When the button is released the door is again held open.

The following checks must be performed if the system is activated externally by a BMZ:

In this case you should note that the BMA's malfunction and alarm forwarding facility should be turned off while the tests are being carried out.

The detector that is attached to the FSA20 tripping facility will not necessarily be the detector that activates it in the event of an alarm.
The test should be carried out for all those detectors that can activate the FSA20 tripping facility in the event of an alarm.

Switch 2 must be set to OFF.

Check / Activity	Result
Trigger the detector in the BMA	Magnet releases and door closes. Controls such as horns are activated. The report is passed to the detector control center.
	Once the alarm has been reset at the control center the door is held firmly again.
Remove the detector from the BMA detector line	Magnet releases and door closes. Controls such as horns are activated. A report is passed to the detector control center.
Replace the detector	The door is held firmly again.
Switch off the detector group in the BMA	Magnet releases and door closes. Controls such as horns are activated. A report is passed to the detector control center.
Switch the detector group back on	The door is held firmly again.

6

Maintenance and regular checks

The building manager must at all times maintain the close-and-retain system in a good operating condition.

Regular routine checks at the site should be carried out as directed by local regulations in order to ensure that the close-and-retain system is in a satisfactory operating condition.

The building manager is also under an obligation to check and maintain all components in order to ensure that they operate and interact properly and without malfunction.

A check must be carried out and documented at least once per year or as directed by the local regulations.

These checks must be carried out either by experts authorized by the manufacturer of the trigger or hold-open mechanisms or by a recognized test laboratory.

7

Appendix

7.1 Technical data 34
7.2 Certificate of conformity 35
7.3 Test reports 36

7.1 Technical data

Input voltage	230 V AC (-10% / +15%)
Wattage	15 VA maximum
Output voltage	24 V DC (+ -10%)
Power output for magnetic clamps	6 W (250 mA)
Increase in output power	Two units can be connected in parallel
Displays on the unit	Green for operating Red for alarmed
Detector connection	Up to 10 threshold value detectors can be connected.
External control	Controlled directly by the control center Short cable distances due to control from SIGMASYS, Sinteso™ or Algorex detector outputs
Line cross-section that can be connected	up to 1.5mm²
Ambient temperature range	0°C … 50°C
Housing	IP30 / IP 66 depending on the cable inlet
Dimensions	180 x 94 x 57 mm
Weight	0.75 kg
Color	Housing: gray RAL 7035 Cover: brown transparent
Designation:	**Part number:**
FSA20 trigger mechanism	S24211-B243-A1
Line terminator for GMT	S24218-G44-A1

Table 6: Technical data

7.2 Certificate of conformity

7.3 Test reports

Name of the manufacturer of the close-and-retain system or its tripping facility	
Manufacturer and model number of each component of the close-and-retain system	
Details of the door (manufacturer, type, size, fire class, location	
Details of the closing mechanism (manufacturer, type, size)	
Details of the door coordinator (manufacturer, type, size)	
Installation date of the close-and-retain system and name of the company responsible	

Table 7: Description of the installed hold-open system

Check of the:		Accepted	Measures to be initiated
1,	Door:		
1.1 —	General: Check that the door(s) move easily and close automatically from any angle under the control of the closing mechanism		
1.2 —	Closing mechanism: Check that the manufacturer's instructions were complied with. If necessary adjust the door coordinator.		
1.3 —	Door coordinator: Check that the manufacturer's instructions were complied with. If necessary adjust it.		
2.	Hold-open system:		
2.1 — —	General: Check that the installed components agree with those stipulated by the list of approved components. Check that the other details given for the installed components comply with EN 14637, 6.2.		
2.2 —	Installation of the detectors: Check that the number and position of the installed detectors complies with EN 14637, A.3.2.		
2.3 — — —	Hold-open device(s) Check that the manufacturer's instructions were complied with. Check the voltage (24V DC +10%/-15%) at the terminals of the hold-open system. Check the hold-open function and the manual triggering and control.		
2.4 — — —	Functional test: Check the interaction of all the components of the hold-open system, checking activation both by simulating the fire characteristics of the detectors and by hand, where possible. Check whether the automatic closing mechanism is activated in the event of a malfunction (removal of a detector, power outage or comparable situation) Check the reset function, if present.		
3. — — —	Formalities Inform the building manager of the results of the tests. Hand this certificate to the building manager. Following successful acceptance tests, mount the acceptance notice.		

Date of the above tests	Signature of the authorized person who performed these acceptance tests
Date for the first routine check and maintenance	.....

Table 8: List of events occurring during acceptance tests

Tests to be carried out during the routine check		Remarks
1	Check all the components of the close-and-retain system against the list of installed components.	
2	Release the door(s) by hand or, where possible, using the manual control. The door(s) must close under the control of the closing mechanism.	
3	Check that the doors move easily. If necessary, adjust the closure mechanism and the door coordinator, if present.	
4	Check that all the components and door fittings are securely attached.	
5	Open the doors so that they are again held open. Trigger the door by interrupting the power supply. The door(s) must close under the control of the closing mechanism	
6	Open the doors so that they are again held open. Trigger the door by simulating the fire characteristics of the detectors. The door(s) must close under the control of the closing mechanism	

Date of the check ..... Date of the next on-site routine check and maintenance**:**	Signature of the checker; .....

Table 9: Form for routine checks

Illustrations

Numerical sorting

Figure 1: Types of ceiling and critical measurements 9
Figure 2: Installation areas 10
Figure 3: Decision diagram for determining how many detectors are required 11
Figure 4: Overview of the possible connections 16
Figure 5 Parameterization switch 17
Figure 6: Circuit for the manual trigger 19
Figure 7: Activation by the fire alarm control center 19
Figure 8: Connection of two FSA20 trigger mechanisms 21
Figure 9: Dorma ED200 type A 22
Figure 10: Dorma ED200 type B 23
Figure 11: Dorma CD400 23
Figure 12: FSA20 with Ex line activation 24

Tables

Numerical sorting

Table 1: Fire alarms 12
Table 2: Magnetic clamps 12
Table 3: Door closers 13
Table 4: Terminal assignment 16
Table 5: Terminal X4, function of connectors 3 and 4 25
Table 6: Technical data 34
Table 7: Description of the installed hold-open system 36
Table 8: List of events occurring during acceptance tests 37
Table 9: Form for routine checks 38

Abbreviations

Term	Abbreviation of	Status
FSA	Hold-open system (**F**est**s**tell**a**nlage)	
BMZ	Fire alarm control center (**B**rand**m**elder**z**entrale)	
BMA	Fire alarm installation (**B**rand**m**elde**a**nlage)	
DIBt	German institute for building technology (**D**eutsches **I**nstitut für **B**au**t**echnik)	
Ex	Area with a potentially **ex**plosive atmosphere	
LOGO	Name of a brand of parameterizable controllers	Device

Index

2
24 V activated when triggered 17
24 V for external consumers 17

A
about this document 2
approved elements 11

C
ceiling detectors 8
controlled externally by the control center 17

D
decision diagram 11
detector line 17, 18
detector types 8
DIBt 8, 11
door closers 13

E
EX line connection 24
external power supply 17

F
fire alarms 11

I
initial installation 29
installation areas 10
Internet 3
Intranet 3

M
magnetic clamp 17
magnetic clamps 12
maintenance 25

P
positioning the detectors 8
potential-free contact 17
power supply 18

S
safety information 5
siting 13
starting up 28

T
technical data 34
technical regulations 6
test reports 36
triggering by hand 19
types of ceiling 9

U
using more than one magnetic clamp 21

W
wiring 18

Siemens AG

http://www.sbt.siemens.com

Published by
Siemens AG
I BT DE FS SYS
D-81379 Munich

© 2005-2009

The information in this document contains general descriptions about technical options that may not be available in all cases. The features required should therefore be specified in detail when placing an order.

Order no. A24205-A331-B273
Issue 2 (08/09)
AG

Printed in the Federal Republic of Germany on environmentally friendly chlorine-free paper