Fac/Perm/Co ID #	Date	Doc ID#
9401	1/18/11	12729

AGENDA

PRECONSTRUCTION MEETING

Domtar Paper Company, LLC
Plymouth, North Carolina
Landfill No. 3 – Phase 3 & 4 Liner Construction
Thursday January 13, 2011
10:00 a.m.

I. INTRODUCTIONS

Domtar Paper Company, LLC (Owner):

- Diane Hardison, Environmental Manager diane.hardison@domtar.com
- Bill Morris, Environmental Engineer (252) 793-8494 bill.morris@domtar.com
- Wynne Shaw, Senior Project Engineer (252) 793-8912 wynne.shaw@domtar.com

RMT North Carolina, Inc. (Engineer and Construction Manager):

- Mike Parker, Senior Client Service Manager (864) 234-9462 mike.parker@rmtinc.com
- Kim Pawlisch, Construction Manager (608) 358-1762 kim.pawlisch@rmtinc.com
- Todd Martin, Office Contact (608) 662-5186 todd.martin@rmtinc.com
- Alex McCune, Construction Manager Replacement (864)281-9134 alex.mccune@rmtinc.com

Ryan Central Incorporated

- Bill Cooper, Operations Manager (301) 582-9797 bill.cooper@ryancentral.com
- John Knoth, Site Superintendent (301) 748-3685 john.knoth@ryancentral.com
- Joe VanRemortel, Contract Administrator, (608) 554-1696 joe.vanremortel@ryancentral.com

North Carolina Department of Natural Resources Division of Waste Management

- Larry Frost, (828)296-4500 larry.frost@ncdenr.gov
- Elizabeth Werner, elizabeth.werner@ncdenr.gov

II. Project Background

A. Project Overview

B. Key Regulatory Issues

III. Administrative Matters

A. Roles and Responsibilities

- Owner
- Engineer
- Contractor
- Construction Manager
- Surveyor

B. Contractual Matters

- Initiating Construction
- Completion Time for Contract
- Subcontractors
- Submittals
- Measurement and Payment
- Progress Payments

C. Health and Safety Provisions

IV. Materials Provided by OWNER

A. Select Clay Fill

B. General Fill (Soil)

C. Prepared Subgrade Fill

D. Topsoil

E Water for construction and dust control

V. Contractor's Schedule and Approach

A. Construction Schedule and Submittals

B. Coordination with Owner's Operations

C. Temporary Facilities

D. Equipment

E. Delivery, Protection, and Storage of Materials

F. Erosion and Sediment Controls

G. Remove Existing Sediment Pond and Structure

H. Clearing and Grubbing

I. Perimeter Berm and Subgrade Construction

J. Prepared Subgrade Layer/Compacted Select Clay Under Sump

K. GCL/Geomembrane/32-ounce Geocushion

L. Tie-in Construction

M. Gravel/Sand Layer

N. Leachate Collection/Forcemain Piping

O. Leachate Collection Sump/Pump Station system/Manhole/Electrical

P. Access roads

M. Topsoil

N. Fertilize, Lime, Seed and Mulch

N. Subcontractors

VI. Surveying

A. Surveyor Responsibilities

B. Contractor Responsibilities

VII. Testing and Documentation

A. Contractor Responsibilities

B. Testing Frequencies

C. Testing Laboratories

VIII. Other Coordination Issues

A. Daily Health and Safety Meetings

B. Weekly Progress Meetings

C. Agency Inspections and Communications

IX. Summary and Adjourn

Domtar

DOMTAR PAPER COMPANY, LLC

LANDFILL NO. 3 - PHASE 3 & 4 CONSTRUCTION

PREPARED FOR: DOMTAR PAPER COMPANY, LLC
PLYMOUTH, NORTH CAROLINA

PREPARED BY: RMT NORTH CAROLINA, INC.

DATE: DECEMBER 2010

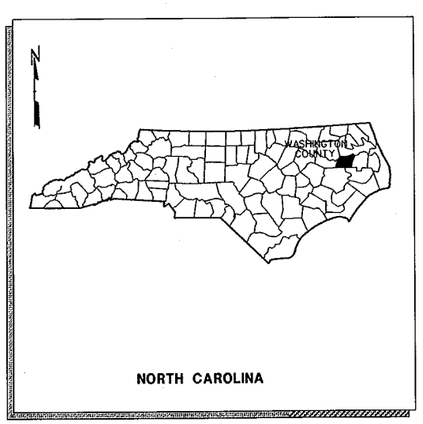

NORTH CAROLINA

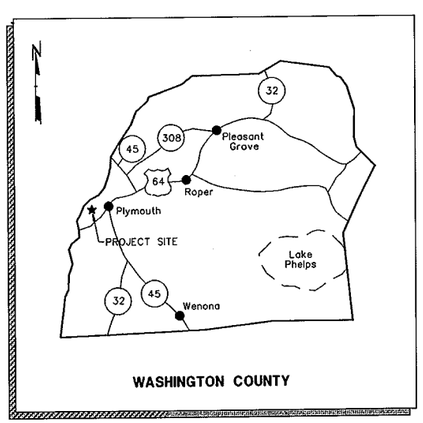

WASHINGTON COUNTY

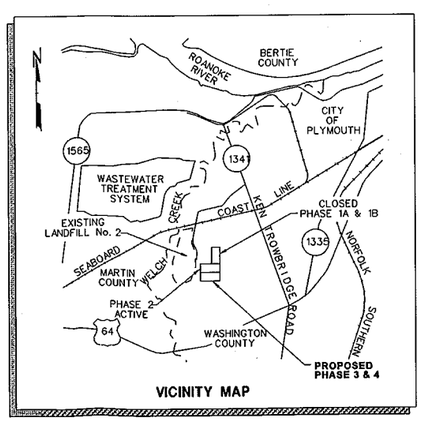

VICINITY MAP

LEGEND

	EXISTING	PROPOSED
ROAD		
BUILDING		
CONTOUR	34	34
WETLANDS		
DRAINAGE FLOW DIRECTION		
MONITORING WELL	MW-1	
CONTROL POINT		
POWER POLE (LIGHT POLE)		
RIP RAP OR CRUSHED STONE		
SPOT ELEVATION	34.2	
TREE LINE		
PROPERTY LINE		
LIMITS OF COMPOSITE LINER CONSTRUCTION		
EROSION CONTROL FENCE		SF

ABBREVIATIONS

APPROX	APPROXIMATELY	I. E.	INVERT ELE
ASTM	AMERICAN SOCIETY FOR TESTING MATERIALS	INV EL	INVERT ELE
		LF	LINEAR FEE
BM	BENCH MARK	LC	LEACHATE C
℄	CENTERLINE	LP	LIGHT POLE
CHDPE	CORRUGATED HIGH DENSITY POLYETHYLENE	LFM	LEACHATE F
		MAX	MAXIMUM
CONC	CONCRETE	MH	MANHOLE
CS	CARBON STEEL	MIN	MINIMUM
CSP	CORRUGATED STEEL PIPE	MISC	MISCELLANE
DIA	DIAMETER	N	NORTH
DET	DETAIL	NO.	NUMBER
DI	DROP INLET	NTS	NOT TO SCA
DWG	DRAWING	OD	OUTSIDE DI
E	EAST	PI	POINT OF IN
EA	EACH	PERF	PERFORATE
EL, ELEV	ELEVATION	PC	POINT OF C
EXIST	EXISTING	ℙ	PROPERTY
FT	FEET	PSF	POUNDS PE
FUT	FUTURE	PSI	POUNDS PE
FM	FORCE MAIN	R	RADIUS
GA	GAGE, GAUGE	REV	REVISION
GALV	GALVANIZED	RR	RAILROAD
GR	GRADE	REQ'D	REQUIRED
HDPE	HIGH DENSITY POLYETHYLENE	SAN	SANITARY S
HORIZ	HORIZONTAL	SECT	SECTION
HP	HIGH POINT	STA	STATION
HW	HEADWALL	STD	STANDARD
ID	INSIDE DIAMETER	T/CONC	TOP OF CO
		TYP	TYPICAL
		W/	WITH

GENERAL NOTES

1. EXISTING PLANIMETRIC AND TOPOGRAPHIC INFORMATION THAT LIES WITHIN THE FOOTPRINT OF LANDFILL No. 3 (PHASE 1A & 1B) WAS DEVELOPED FROM A SURVEY PERFORMED BY CHANCE & ASSOCIATES, INC., NEW BERN, NORTH CAROLINA DATE OF SURVEY: APRIL 15, 2010.

2. CONTROL MONUMENT INFORMATION:

NCGS MONUMENT "ADVISOR" GRID COORDINATES	NCGS MONUMENT "BENNETT" GRID COORDINATES
N=765,198.28'	N=764,433.87'
E=2,659,512.73'	E=2,658,436.50'
(NAD 83)	(NAD 83)
ELEV = 39.12'	ELEV = 37.71'
(NGVD 29)	(NGVD 29)

3. PLANIMETRIC AND TOPOGRAPHIC INFORMATION THAT FALLS OUTSIDE THE LIMITS OF LANDFILL No. 3 (PHASE 1A & 1B) AS DESCRIBED IN NOTE 1 WAS DEVELOPED FROM A SURVEY PERFORMED BY McKIM & CREED ENGINEERING, INC., CAREY, NORTH CAROLINA, DATED APRIL 26, 2001. ALL COORDINATES AND BEARINGS ARE BASED ON THE NORTH CAROLINA STATE PLANE COORDINATE SYSTEM, NAD 83. ALL ELEVATIONS SHOWN ARE IN FEET AND ARE BASED ON NGVD 1929 DATUM. PROPERTY LINES BASED ON SURVEY PROVIDED BY McKIM & CREED AND INFORMATION PROVIDED BY WEYERHAEUSER COMPANY. ELEVATIONS SHOWN IN THE BORROW AREAS (PLAN SHEET 5) HAVE BEEN ALTERED BY PREVIOUS CONSTRUCTION.

4. THE PROPOSED SITE IS LOCATED IN WASHINGTON COUNTY, SOUTHWEST OF THE CITY OF PLYMOUTH, NORTH CAROLINA, AS SHOWN ON THE VICINITY MAP.

5. ALL EROSION AND SEDIMENT CONTROL MEASURES SHALL BE IMPLEMENTED, MONITORED, AND MAINTAINED ON A REGULAR BASIS TO ASSURE MAXIMUM EFFICIENCY IN CONTAINING SEDIMENTS WITHIN THE PROPERTY DURING AND AFTER LANDFILL/EARTHWORK OPERATIONS UNTIL THE DISTURBED AREAS ARE REVEGETATED OR OTHERWISE STABILIZED. CONTRACTOR SHALL COMPLY WITH THE EROSION AND SEDIMENT CONTROL PLAN (ESCP) FOR THE CONSTRUCTION OF PHASE 3 AND 4 DATED SEPTEMBER 2010 AND FOR THE ON-SITE SOIL BORROW AREA DATED AUGUST 2010.

6. PRESERVE AND PROTECT ALL MONITORING WELLS AND OTHER ENVIRONMENTAL MONITORING FEATURES. DAMAGED FEATURES WILL BE REPAIRED BY THE OWNER AT THE CONTRACTORS EXPENSE.

DRAWING LIST

SHEET NO.	TITLE
1	TITLE SHEET
2	EXISTING CONDITIONS MAP AND SITE LAYOUT P
3	LINER GRADING PLAN
4	LEACHATE PIPING PLAN
5	BORROW AREA SITE PLAN
6	ENGINEERING CROSS SECTIONS
7	LANDFILL DETAILS
8	LEACHATE COLLECTION AND REMOVAL SYSTEM
9	MISCELLANEOUS DETAILS
10	ELECTRICAL PLAN

NOTE: THE CONTRACTOR SHALL NOTIFY ALL AREA UTILITY COMPANIES PRIOR TO COMMENCING WORK ON THIS CONTRACT, IN ACCORDANCE WITH STATE AND LOCAL REQUIREMENTS.

NOTE: THESE PLANS ARE ACCOMPANIED BY A PROJECT MANUAL OF THE SAME TITLE. THESE DOCUMENTS ARE INTERRELATED AND ARE INTENDED TO BE USED TOGETHER.

RMT

NORTH
LIC

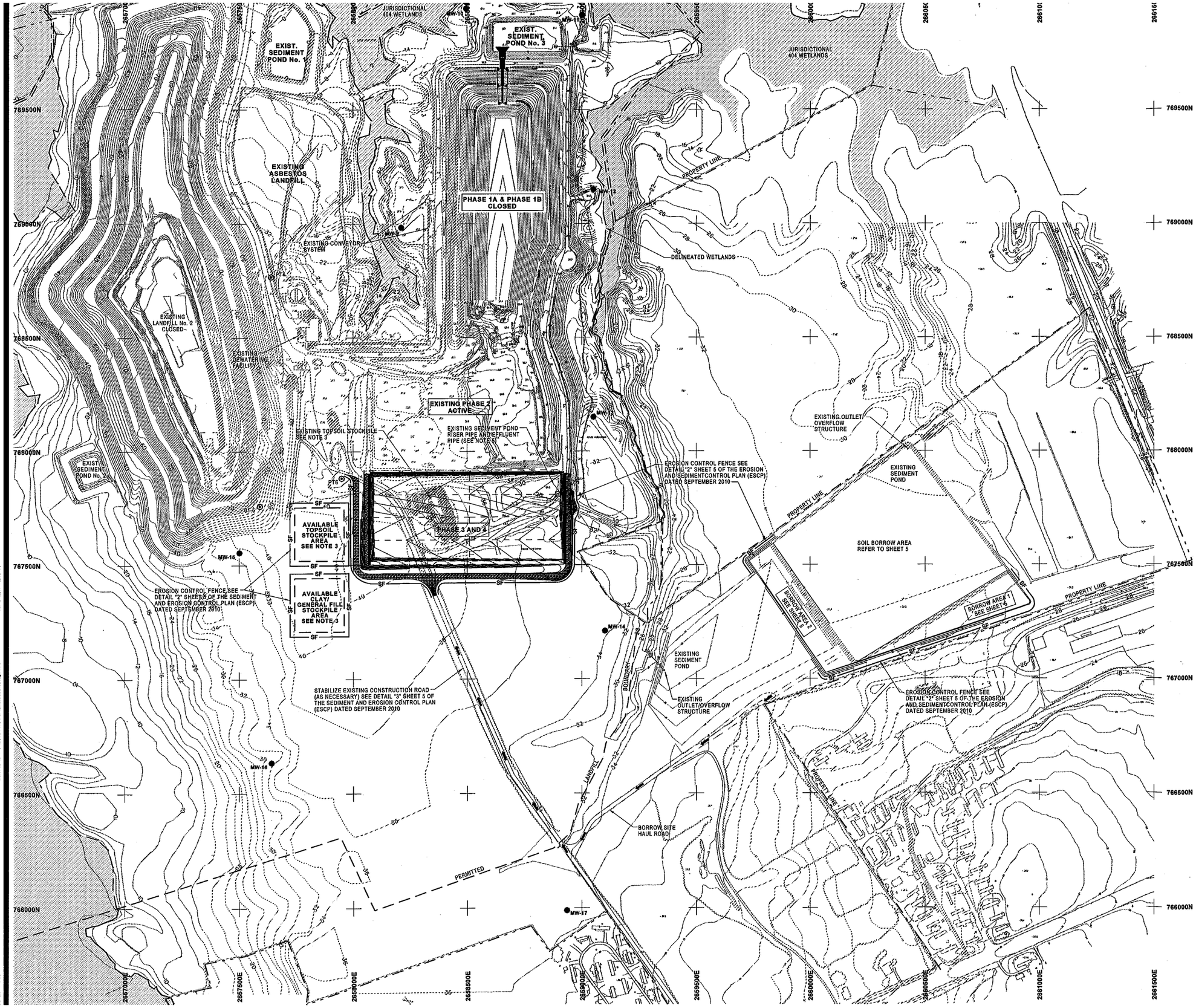

NOTES

1. REFER TO SHEET 1 FOR STANDARD LEGEND, ABBREVIATIONS
2. BORROW SITE HAUL ROAD UPGRADES SHALL BE APPROVED BY ENGINEER PRIOR TO IMPLEMENTATION.
3. EXISTING TOPSOIL STOCKPILE WILL BE REMOVED PRIOR TO PI CONSTRUCTION. ANY EXCESS TOPSOIL, GENERAL FILL OR CLA DURING PHASE 3 AND 4 CONSTRUCTION CAN BE STOCKPILED I STOCKPILE AREA LOCATION SHOWN OR AT OTHER LOCATIONS THE OWNER.
4. WHEN CONSTRUCTION IS COMPLETED, REGRADE AND SEED ST POSITIVE DRAINAGE ON AND AROUND STOCKPILES.
5. EXISTING SEDIMENT POND RISER PIPE AND EFFLUENT PIPE WI PRIOR TO LINER CONSTRUCTION.

HORIZONTAL/VERTICAL CONTROL POIN

POINT I.D.	NORTH COORDINATE	EAST COORDINATE	
PT4	768758.97	2657840.89	IRS CAP
PT6	767882.15	2657950.28	IRS CAP
01-6	767759.89	2657690.77	ELEV. S

N

0 200 400 6

SCALE 1"= 200'

NO.	BY	DATE	REVISION
3.			
2.			
1.			

PROJECT: LANDFILL No. 3 - PHASE 3 & 4 C
DOMTAR PAPER COMPAN
PLYMOUTH, NORTH CARO

SHEET TITLE:
EXISTING CONDITIONS MAP AND SITE

DRAWN BY: stormerl	SCALE: 1" = 200'	PROJ. N	
CHECKED BY: KDP		FILE NO	
APPROVED BY: TWM	DATE PRINTED:		
DATE: DECEMBER 2010		SH	

RMT

NORTH LICE

Domtar

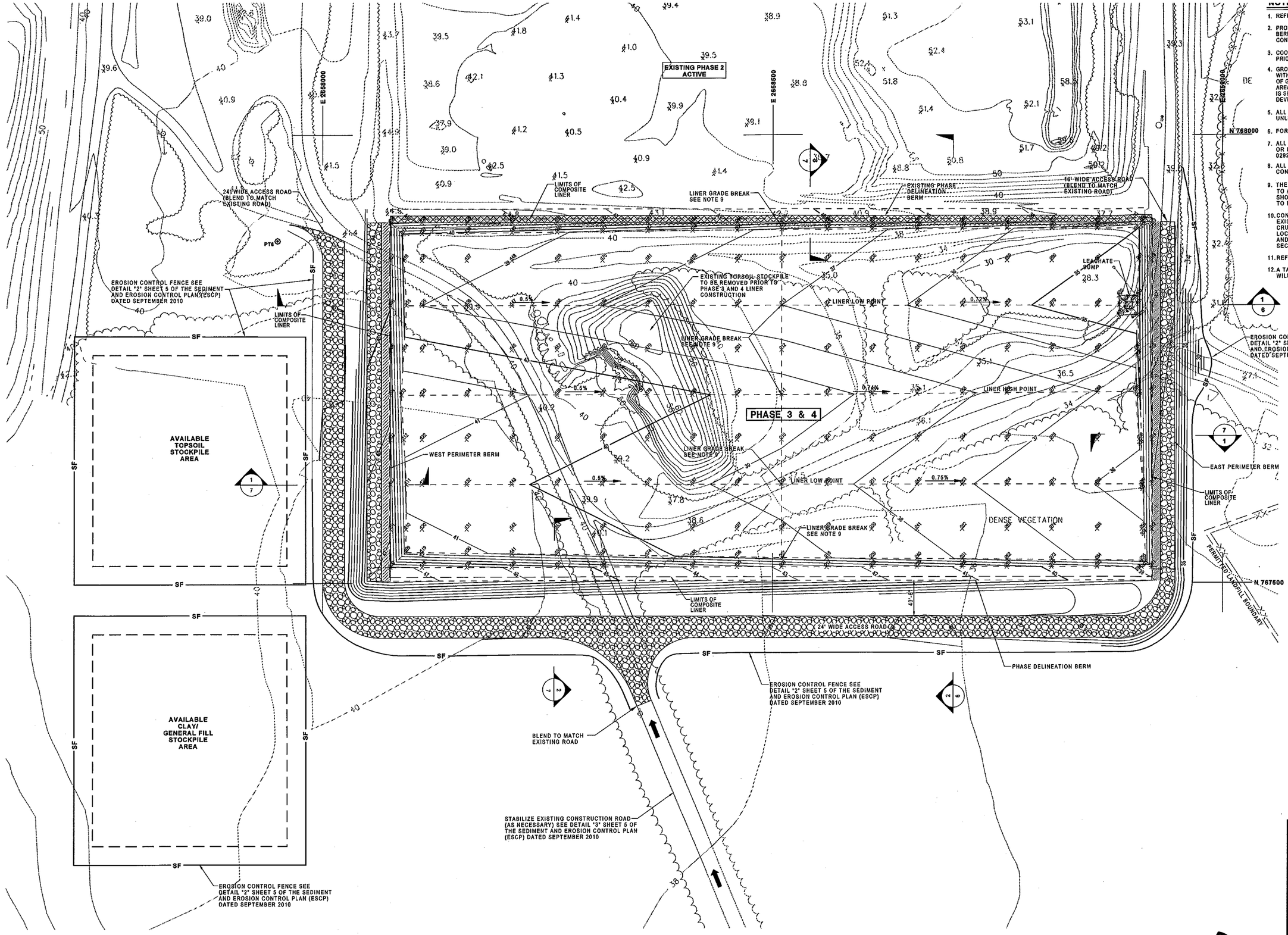

NOTES

1. REFER TO SHEET 1 FOR STANDARD LEGEND, ABBREVIATIONS A
2. PROPOSED CONTOURS INSIDE THE PERIMETER BERM AND PHAS BERM ARE TOP OF PREPARED SUBGRADE ELEVATIONS. ALL OTH CONTOURS ARE FINISHED GRADE ELVATIONS.
3. COORDINATE GEOMETRY TABLE WILL BE PROVIDED TO THE CON PRIOR TO CONSTRUCTION.
4. GROUNDCOVER (TEMPORARY OR PERMANENT) EXPOSED SLOPE WITHIN 21 CALENDAR DAYS FOLLOWING COMPLETION OF ANY PI OF GRADING. PERMANENT GROUNDCOVER FOR ALL DISTURBED AREAS WITHIN 15 WORKING DAYS OR 90 CALENDAR DAYS (WHIC IS SHORTER) FOLLOWING COMPLETION OF CONSTRUCTION OR DEVELOPMENT.
5. ALL NEW SIDE SLOPES ARE TO BE 3' (HORIZONTAL) TO 1' UNLESS NOTED OTHERWISE.
6. FOR DETAIL OF LEACHATE SUMP REFER TO DETAIL "G" SH
7. ALL AREAS NOT COVERED WITH RIP RAP, CRUSHED STON OR LINER SYSTEM, SHALL BE GRASSED IN ACCORDANCE 02921 AND 02923 OF THE SPECIFICATIONS.
8. ALL EXISTING MONITORING WELLS ARE TO BE PROTECTE CONSTRUCTION.
9. THE LINER GRADE BREAKS TO A STEEPER SLOPE AT THE TO ALLOW FOR LONG-TERM SETTLEMENT OF THE SUBGR SHOWN WERE ESTABLISHED TO PROVIDE CAMBER FOR TH TO HAVE A MINIMUM SLOPE OF 0.5% AFTER PREDICTED S
10. CONTRACTOR SHALL FIELD DETERMINE THE CENTERLINE EXISTING PHASE DELINEATION BERM FOR PHASE 2. REMO CRUSHED STONE ON TOP OF BERM AS REQUIRED TO LOC LOCATION FOR NEW LINER IN PHASE 3. EXISTING LINER AND UNDAMAGED FOR TIE-IN. REFER TO DETAIL "B" SHE SECTION "3" SHEET 7.
11. REFER TO DETAILS "A" AND "B" SHEET 7 FOR LINER CONS
12. A TABLE OF TOP OF PREPARED SURBGRADE COORDINATE WILL BE PROVIDED TO THE CONTRACTOR PRIOR TO CONS

HORIZONTAL/VERTICAL CONTROL P

POINT I.D.	NORTH COORDINATE	EAST COORDINATE	
PT4	768766.97	2657640.89	IR
PT6	767882.15	2657950.26	IR
01-6	767759.89	2657590.77	EL

0 50 100 15

SCALE 1"= 50'

NO.	BY	DATE	REVISION
3.			
2.	KDP	1/10/11	COORDINATE AND ELEVATION LOCAT
1.	KDP	1/10/11	SOUTH AND WEST BERM HATCH

PROJECT: LANDFILL No. 3 - PHASE 3 & 4 C
DOMTAR PAPER COMPAN
PLYMOUTH, NORTH CARO

SHEET TITLE:
LINER GRADING PLAN

DRAWN BY:	stormerl	SCALE:	PROJ. N
CHECKED BY:	KDP	1" = 50'	FILE NO
APPROVED BY:	TWM	DATE PRINTED:	SH
DATE:	DECEMBER 2010		

Domtar

NORTH
LICE

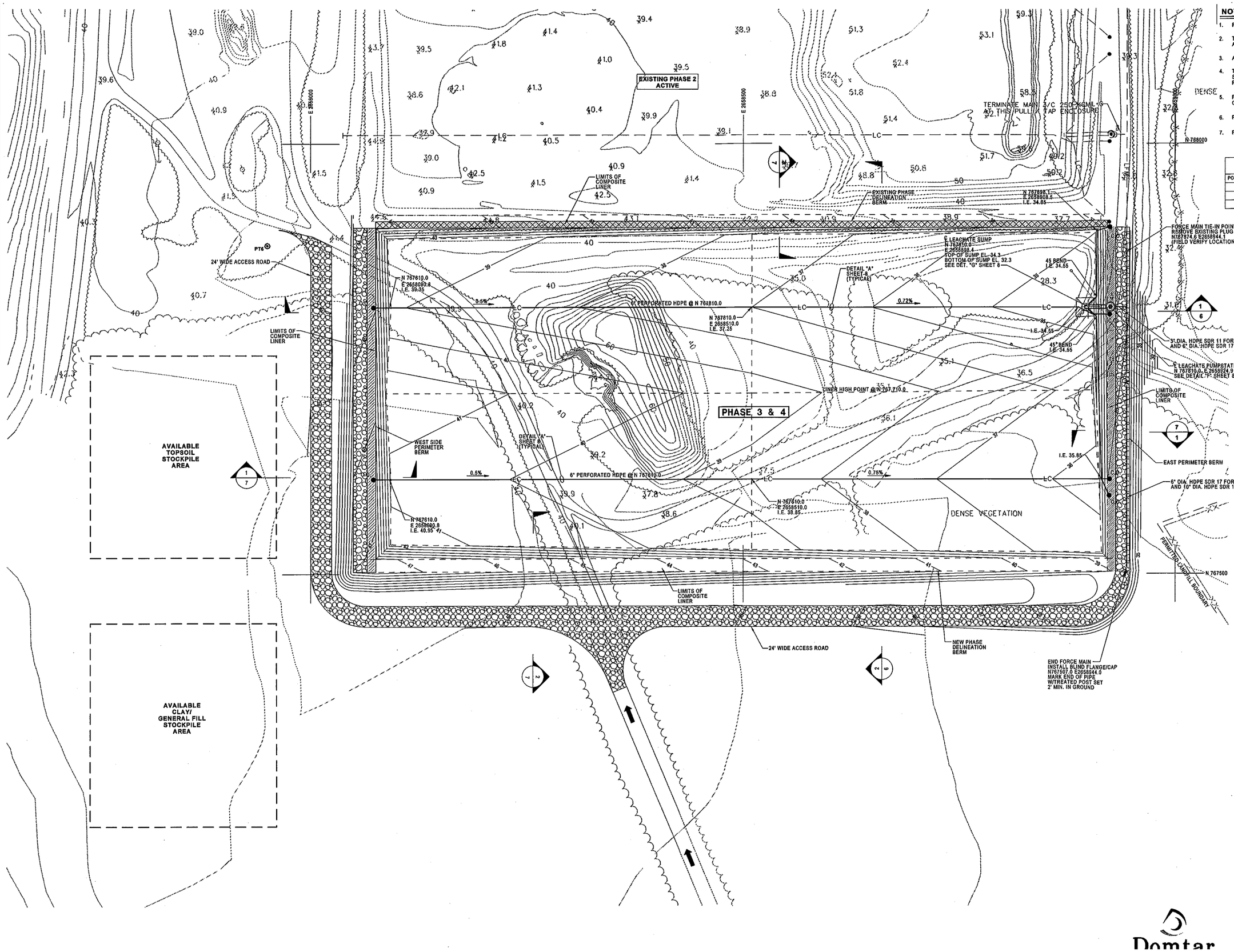

NOTES

1. REFER TO SHEET 1 FOR STANDARD LEGEND, ABBREVIATIONS
2. THRUST BLOCKS SHALL BE INSTALLED ON FORCE MAIN AT ALL AND BENDS. REFER DETAIL "H" SHEET 8.
3. ALL 6" AND 18" HDPE PIPE SHALL BE SDR 17.
4. THE LEACHATE COLLECTION SYSTEM DRAINAGE LAYER CONSI STONE AND OVERLAIN BY 6" OF SELECT GRADED SAND. THE N PLACED OVER THE ENTIRE LINED FOOTPRINT.
5. FORCE MAIN SHALL BE A DUAL CONTAINMENT PIPING SYSTEM OF A 6" HDPE FORCE MAIN IN A 10" HDPE CARRIER PIPE.
6. REFER TO SECTION "1" SHEET 7 FOR CLEANOUT DETAIL.
7. REFER TO DETAIL "A" SHEET 7 FOR LEACHATE COLLECTION AN

HORIZONTAL/VERTICAL CONTROL POINT

POINT I.D.	NORTH COORDINATE	EAST COORDINATE	
PT4	768768.97	2657640.89	IRS CAP -
PT6	767882.15	2657950.26	IRS CAP -
01-6	767759.69	2657690.77	ELEV. 69.

N

0 50 100 15

SCALE 1"= 50'

NO.	BY	DATE	REVISION
3.			
2.			
1.	KDP	1/10/11	SOUTH AND WEST BERM HATCH

PROJECT: LANDFILL No. 3 - PHASE 3 & 4 C
DOMTAR PAPER COMPAN
PLYMOUTH, NORTH CARO

SHEET TITLE:
LEACHATE PIPING PLA

DRAWN BY:	stormari	SCALE:	PROJ. N
CHECKED BY:	KDP	1" = 50'	FILE NO.
APPROVED BY:	TWM	DATE PRINTED:	
DATE:	DECEMBER 2010		SH

Domtar

BMT

NORTH

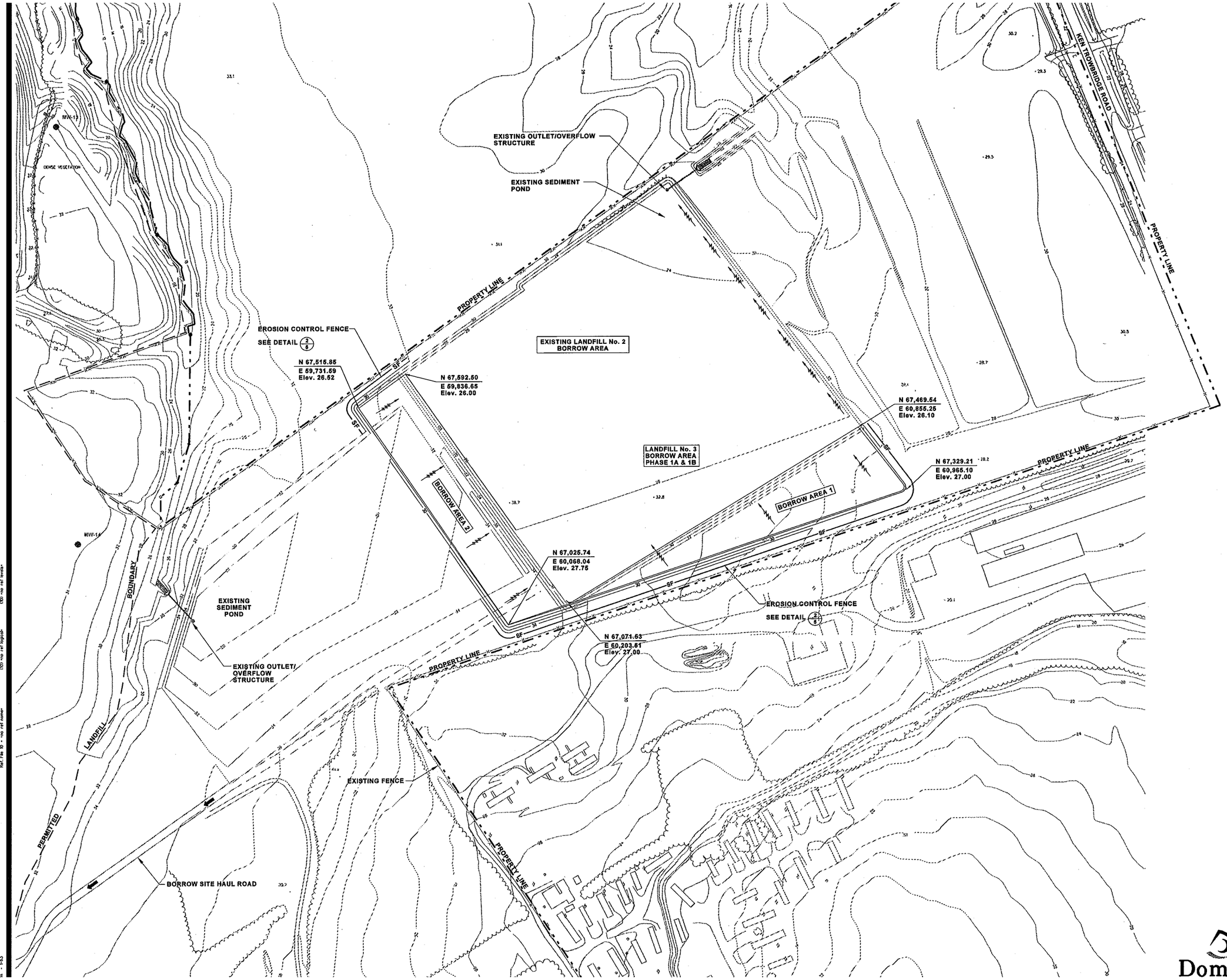

1. REFER TO SHEET 1 FOR STANDARD LEGEND, ABBREVI GENERAL NOTES.
2. CLEARING AND GRUBBING LIMITS FOR THE BORROW A OUTSIDE THE GRADING LIMITS. DISPOSAL AREA FOR C GRUBBING MATERIAL WITHIN THE BORROW AREA TO B OWNER/ENGINEER PRIOR TO DISPOSAL.
3. BORROW AREA 1 FOR PHASE 3 & 4 CONSTRUCTION SH FROM A NORTHWEST TO SOUTHEAST DIRECTION. BOR PHASE 3 & 4 CONSTRUCTION SHALL BE EXCAVATED FR SOUTHWEST DIRECTION. OBTAIN ALL THE BORROW MA AREA 1 PRIOR TO ANY EXCAVATION IN BORROW AREA GRADE THE BOTTOM AREA TO PROVIDE POSITIVE DRA NORTHEASTERN OUTLET/OVERFLOW STRUCTURE.
4. AFTER BORROW OPERATION IS COMPLETE, ALL DISTUI BE SEEDED IN ACCORDANCE WITH THE SPECIFICATION
5. PROPOSED GRADES SHOWN IN BORROW AREA ARE FO INFORMATION. CONTRACTOR IS TO BORROW MATERIA SEQUENCE AND PROVIDE POSITIVE DRAINAGE TO THE OUTLET OVERFLOW STRUCTURE AT ALL TIMES.
6. TOPSOIL THAT IS REMOVED FROM THE BORROW AREA THE CONSTRUCTION OF PHASE 3 AND 4 SHALL BE PLA STOCKPILE AREA AS INDICATED ON PLAN SHEET 2.
7. BORROW SITE HAUL ROAD UPGRADES SHALL BE APPR OWNER/ENGINEER PRIOR TO IMPLEMENTATION.
8. EXTRA CLAY OR GENERAL FILL EXCAVATED FROM WITI AREA WILL BE STOCKPILED AT LOCATION SHOWN ON S

0 100 200

SCALE 1"= 100'

NOTE: THE CONTRACTOR SHALL NOTIFY ALL AREA UTI TO COMMENCING WORK ON THIS CONTRACT, IN STATE AND LOCAL REQUIREMENTS.

NOTE: THESE PLANS ARE ACCOMPANIED BY A PROJEC TITLE. THESE DOCUMENTS ARE INTERRELATED BE USED TOGETHER.

NO.	BY	DATE	REVISION
3.			
2.			
1.			

PROJECT: LANDFILL No. 3 - PHASE 3 & 4 C
DOMTAR PAPER COMPAN
PLYMOUTH, NORTH CARO

SHEET TITLE:
BORROW AREA SITE PL

DRAWN BY:	stormerl	SCALE:	PROJ.
CHECKED BY:	KOP	1" = 100'	FILE NO
APPROVED BY:	TWM	DATE PRINTED:	
DATE:	DECEMBER 2010		

Domtar

RMT

NORTH
LIC

NOTES

1. CROSS SECTION PREPARED FOR DETAIL RE
ILLISTRATIVE PURPOSES. DO NOT SCALE F
DRAWING.

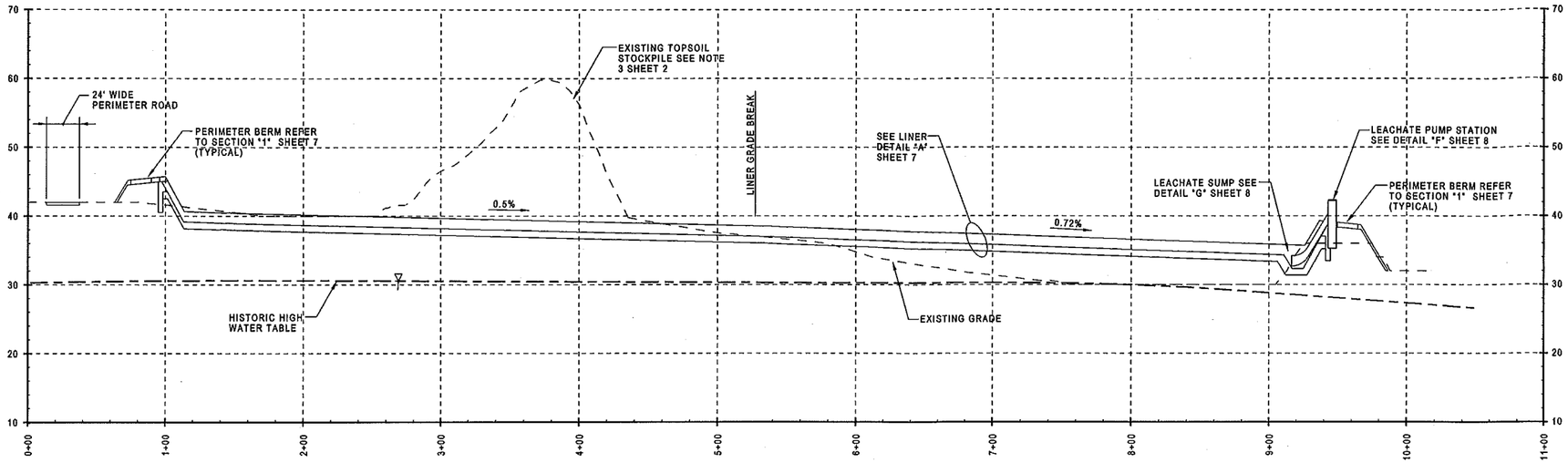

1 / 3,4 **SECTION**
1"=50' HORIZ.
1"=10' VERT.

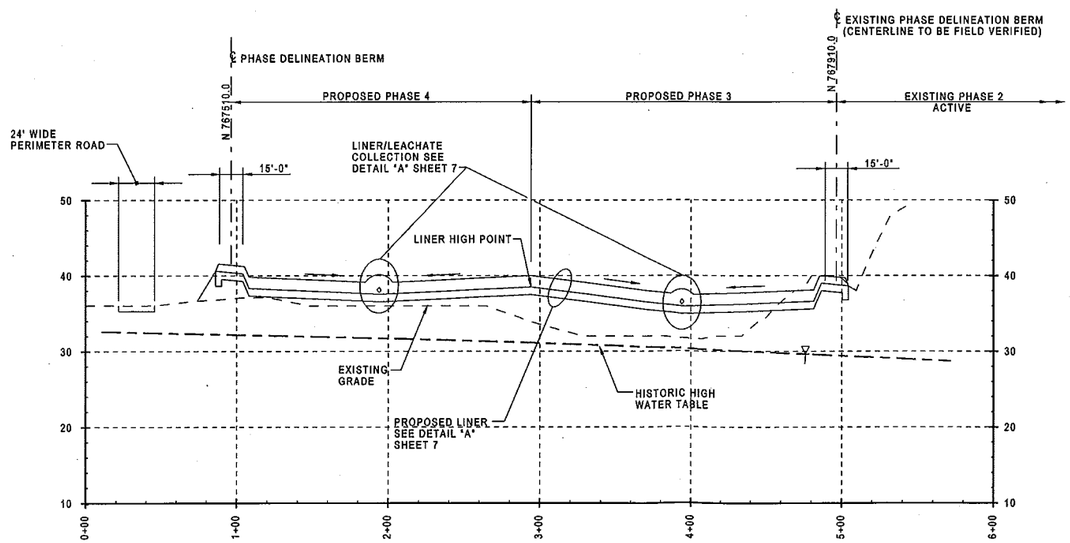

2 / 3,4 **SECTION**
1"=50' HORIZ.
1"=10' VERT.

THE HYDROGEOLOGY WORK FOR DOMTAR IN P
NORTH CAROLINA WAS PERFORMED BY RMT, IN
HYDROGEOLOGIST IN SUPPORT OF RMT NORTH

0 10 20 3

APPROXIMATE SCALE: 1"= 10' (V

0 50 100 15

APPROXIMATE SCALE: 1"= 50' (H

NOTE: THE CONTRACTOR SHALL NOTIFY ALL AREA UTIL
TO COMMENCING WORK ON THIS CONTRACT, IN
STATE AND LOCAL REQUIREMENTS.

NOTE: THESE PLANS ARE ACCOMPANIED BY A PROJECT
TITLE. THESE DOCUMENTS ARE INTERRELATED A
BE USED TOGETHER.

NO.	BY	DATE	REVISION
3.			
2.			
1.			

PROJECT: LANDFILL No. 3 - PHASE 3 & 4 C
DOMTAR PAPER COMPANY
PLYMOUTH, NORTH CARO

SHEET TITLE:
ENGINEERING CROSS SEC

DRAWN BY:	stormerl	SCALE:	PROJ. N
CHECKED BY:	KDP	AS SHOWN	FILE NO.
APPROVED BY:	TWM	DATE PRINTED:	
DATE:	DECEMBER 2010		SH

Domtar

RMT

NORTH

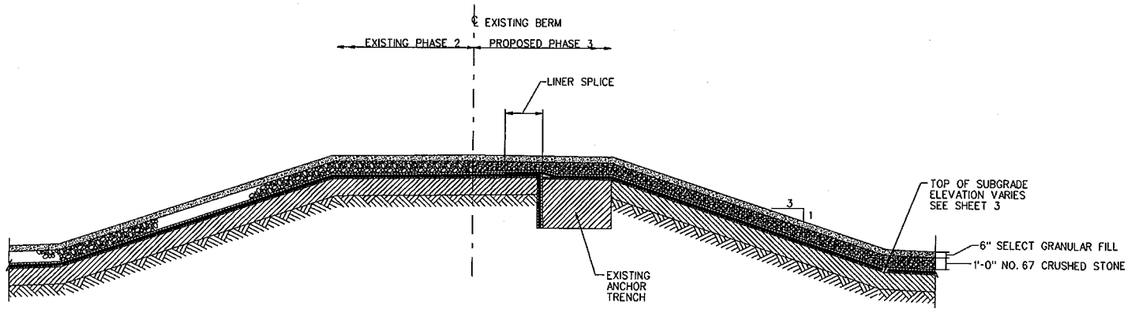

3 / 3,4 **SECTION - PHASE DELINEATION BERM**
NOT TO SCALE

NOTE: ADD 6" (MIN.) SELECT GRANULAR FILL OVER EXPOSED NO. 67 CRUSHED STONE LAYER WITHIN EXISTING PHASE 2.

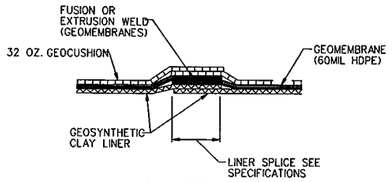

NOTE
VERTICAL SCALE EXAGGERATED FOR CLARITY

B / 7 **TYPICAL LINER SPLICE DETAIL**
NOT TO SCALE

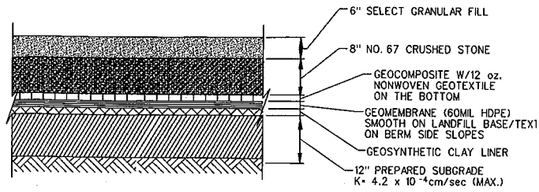

ALTERNATE LINER DETAIL
NTS

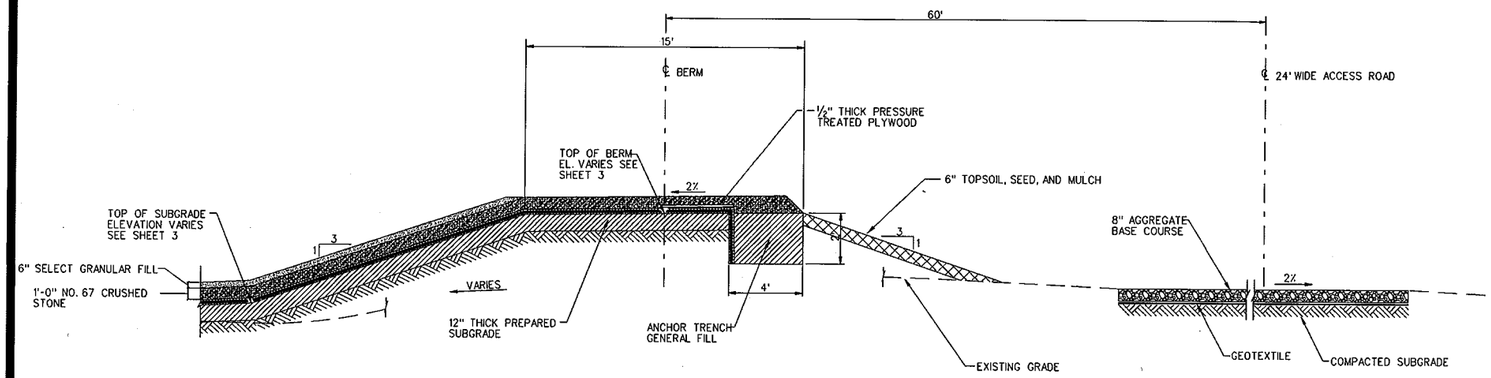

2 / 3,4 **SECTION - PHASE DELINEATION BERM**
NOT TO SCALE

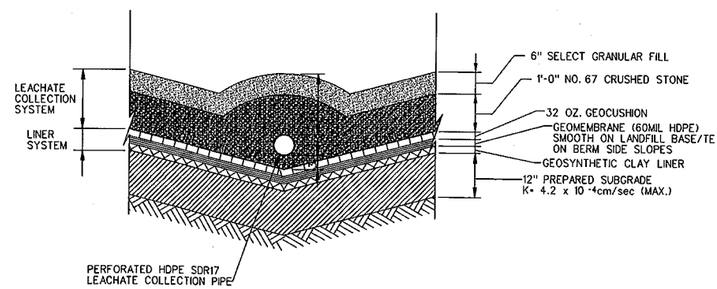

A / 3,4 **LINER/LEACHATE COLLECTION DETAIL**
NOT TO SCALE

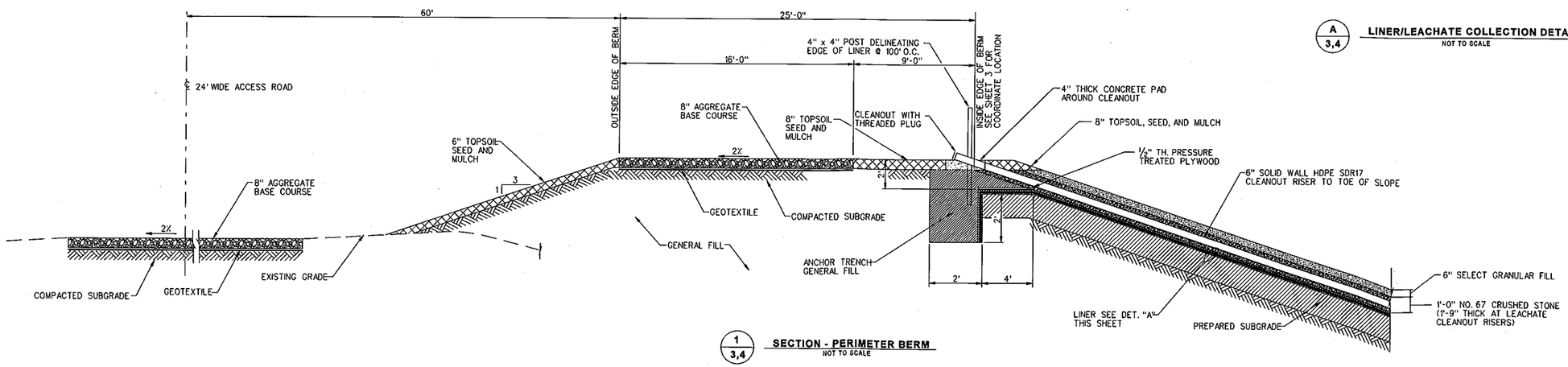

1 / 3,4 **SECTION - PERIMETER BERM**
NOT TO SCALE

NOTE: THE CONTRACTOR SHALL NOTIFY ALL AREA UTILI TO COMMENCING WORK ON THIS CONTRACT, IN A STATE AND LOCAL REQUIREMENTS.

NOTE: THESE PLANS ARE ACCOMPANIED BY A PROJECT TITLE. THESE DOCUMENTS ARE INTERRELATED A BE USED TOGETHER.

NO.	BY	DATE	REVISION
3.			
2.			
1.	KDP	1/10/11	SAND LAYER AND NOTE ADDED TO DET

PROJECT: **LANDFILL No. 3 - PHASE 3 & 4 CO DOMTAR PAPER COMPANY PLYMOUTH, NORTH CAROL**

SHEET TITLE: **LANDFILL DETAILS**

DRAWN BY:	stormerf	SCALE:	PROJ. NO
CHECKED BY:	KDP	NOT TO SCALE	FILE NO.
APPROVED BY:	TWM	DATE PRINTED:	SHE
DATE:	DECEMBER 2010		

Domtar

RMT

NORTH C LICEN

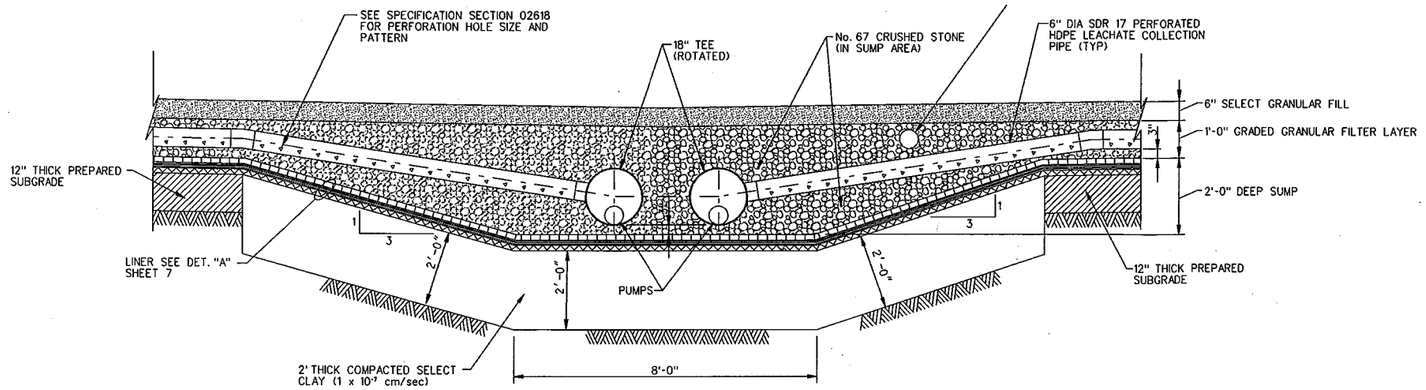

3/8 SECTION 1/2"=1'-0"

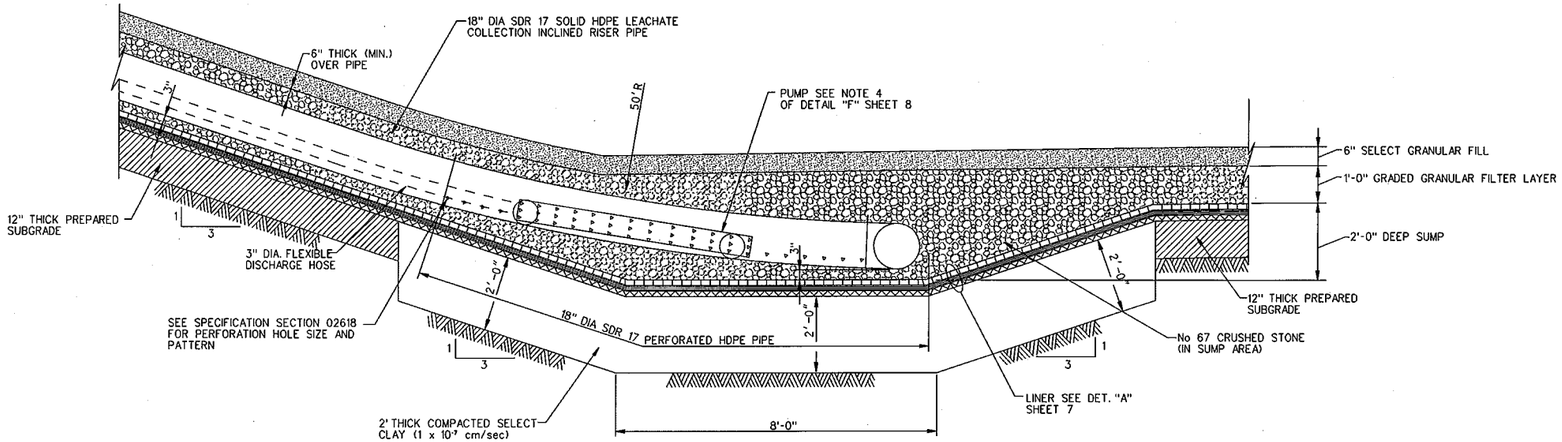

2/8 SECTION 1/2"=1'-0"

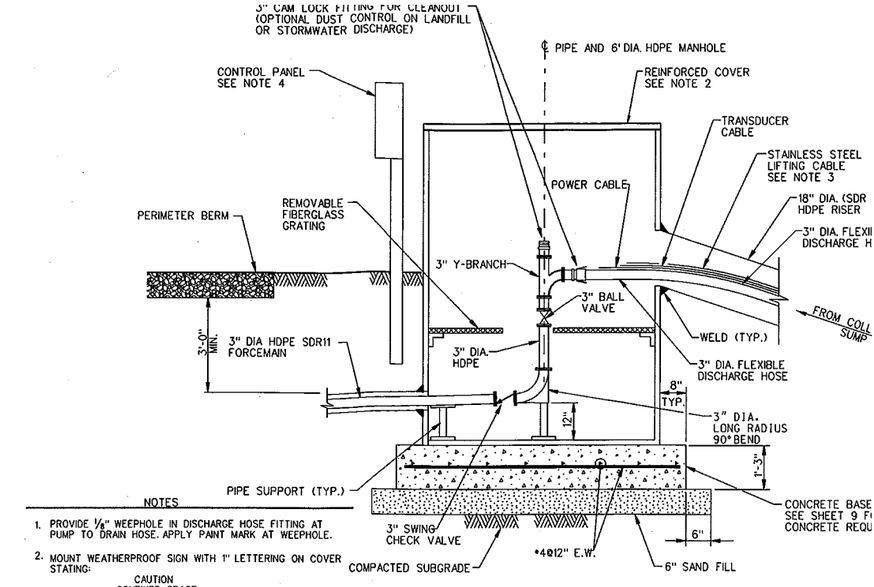

NOTES

1. PROVIDE 1/8" WEEPHOLE IN DISCHARGE HOSE FITTING AT PUMP TO DRAIN HOSE. APPLY PAINT MARK AT WEEPHOLE.
2. MOUNT WEATHERPROOF SIGN WITH 1" LETTERING ON COVER STATING:

   CAUTION
   CONFINED SPACE
   OXYGEN DEFICIENT AND
   EXPLOSIVE HAZARDS PRESENT
   ENTRY BY PERMIT ONLY
3. PUMP LIFT CABLE TO BE FASTENED TO INSIDE OF MANHOLE.
4. OWNER WILL FURNISH THE LEACHATE PUMPS, CONTROL PANEL, TRANSDUCERS, MOTOR/LEADS FROM CONTROL PANEL TO PUMP AND TRANSDUCER CABLES. CONTRACTOR WILL INSTALL THESE ITEMS AS WELL AS FURNISH AND INSTALL STAINLESS STEEL LIFTING CABLES, FLEXIBLE DISCHARGE HOSES, VALVES, FITTINGS, AND OTHER APPURTENANCES. FURNISH AND INSTALL ITEM TO MATCH AS CLOSE AS POSSIBLE TO THE ITEMS FURNISHED AND INSTALLED IN EXISING LEACHATE PUMP STATION MANHOLES IN PHASES 1B AND 2. ELECRICAL JUNCTION BOX TO BE INSTALLED BETWEEN MANHOLE AND CONTROL PANEL TO PREVENTMIGRATION OF GAS THROUGH CONDUIT.
5. ALL FORCE MAIN PIPING TO BE DUAL CONTAINMENT PIPING. 3" FORCE MAIN TO HAVE 6" CARRIER PIPE,6" FORCE MAIN TO HAVE 10" CARRIER PIPE.
6. ALL 3" HDPE PIPE TO BE SDR 11. ALL 6", 10", & 18" HDPE PIPE TO BE SDR 17.

1/8 SECTION 1/2"=1'-0"

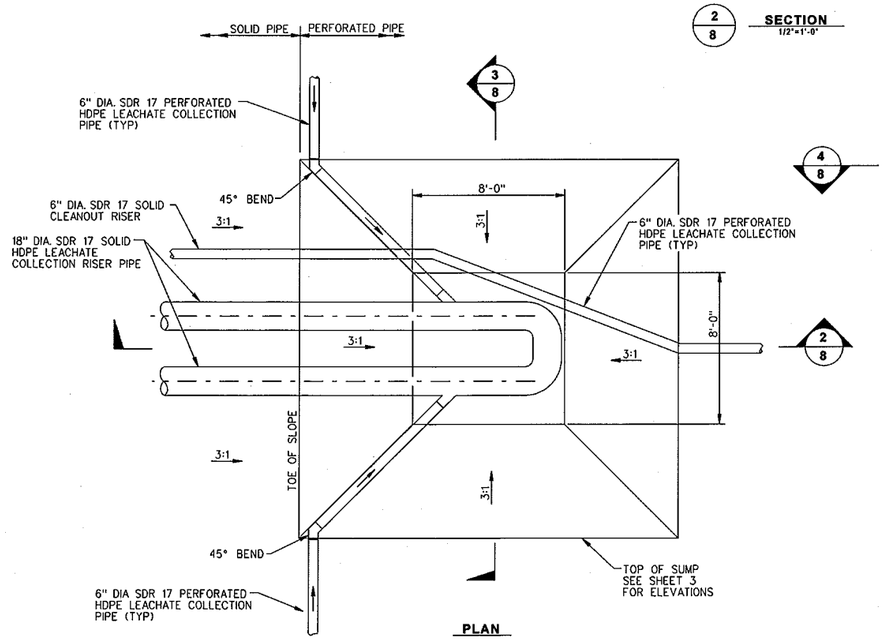

PLAN

G/4 LEACHATE COLLECTION SUMP DETAIL 1/4"=1'-0"

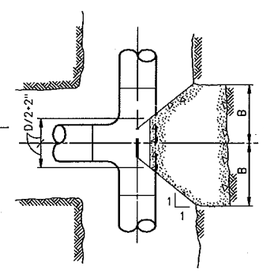

PLAN - TEES

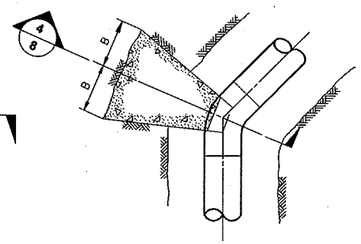

PLAN - BENDS

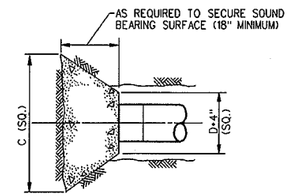

PLAN & ELEVATION - PLUGS

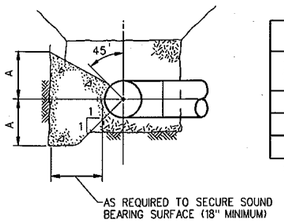

4/8 SECTION NOT TO SCALE

H/8 TYPICAL THRUST BLOCK DETAIL NOT TO SCALE

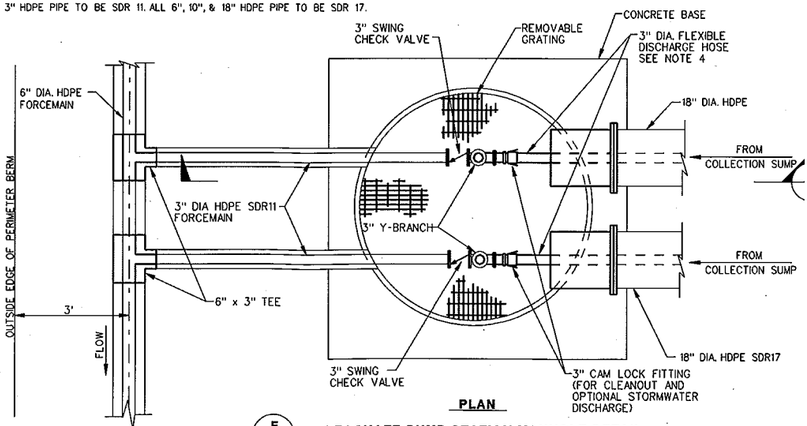

PLAN

F/4 LEACHATE PUMP STATION MANHOLE DETAIL 1/2"=1'-0"

*** THRUST BLOCK DIMENSION TABLE**

PIPE SIZE	90° ELLS		45° ELLS		22½° ELLS 11¼° ELLS		TEES		PLUGS
D	A	B	A	B	A	B	A	B	C
3"	0'-9"	1'-0"	0'6"	0'-9"	0'-6"	0'-6"	0'-9"	1'-0"	1'-6"
6"	1'-0"	2'-7"	1'-0"	1'-6"	0'-9"	1'-0"	1'-0"	2'-7"	2'-9"

* DIMENSIONS SHOWN ARE MINIMUM AND ARE BASED ON A TEST PRESSURE OF 225 PSI AND A SOIL BEARING CAPACITY OF 2000 PSF

NOTE: THE CONTRACTOR SHALL NOTIFY ALL AREA UTIL TO COMMENCING WORK ON THIS CONTRACT, IN STATE AND LOCAL REQUIREMENTS.

NOTE: THESE PLANS ARE ACCOMPANIED BY A PROJECT TITLE. THESE DOCUMENTS ARE INTERRELATED A BE USED TOGETHER.

NO.	BY	DATE	REVISION
3.			
2.			
1.			

PROJECT: LANDFILL No. 3 - PHASE 3 & 4 C
DOMTAR PAPER COMPAN
PLYMOUTH, NORTH CARO

SHEET TITLE: LEACHATE COLLECTION REMOVAL SYSTEM DETA

DRAWN BY: stormeri	SCALE:	PROJ. N	
CHECKED BY: KDP		FILE NO.	
APPROVED BY: TWM	DATE PRINTED:	SH	
DATE: DECEMBER 2010			

Domtar

RMT

NORTH LIC

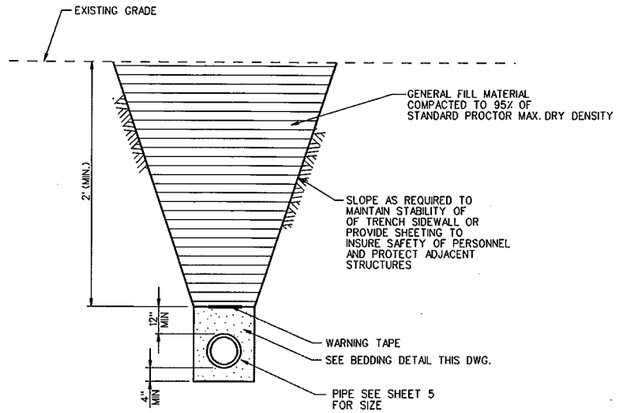

TYPICAL TRENCHING DETAIL
NOT TO SCALE

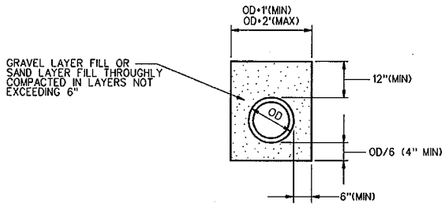

TYPICAL PIPE BEDDING DETAIL
NOT TO SCALE

NOTES

1. REFER TO SHEET 1 FOR LEGEND, ABBREVIATIONS AND GENERAL NO
2. ALL CONCRETE SHALL DEVELOP A MINIMUM COMPRESSIVE STRENGT OF 4000 PSI IN 28 DAYS. SLUMP SHALL BE BETWEEN 2 AND 4 IN IN ACCORDANCE WITH ASTM C143.

CAST-IN-PLACE CONCRETE REQUIREMENT

1. ALL REINFORCING STEEL SHALL BE GRADE 60, DEFORMED BARS, CO TO ASTM A615.
2. ALL DETAILING, FABRICATION, AND PLACING OF REINFORCED STEEL S CONFORM TO THE MANUAL OF STANDARD PRACTICE FOR DETAILING REINFORCED CONCRETE STRUCTURES (ACI-SP-66, LATEST EDITION).
3. DO NOT PLACE CONCRETE WHEN WEATHER CONDITIONS PREVENT PLACEMENT AND CONSOLIDATION.
4. COLD WEATHER: ACI 306R. PROVIDE AND MAINTAIN 50 DEGREES F MINIMUM, CONCRETE TEMPERATURE. DO NOT PLACE CONCRETE WHE AMBIENT TEMPERATURE IS BELOW 40 DEGREES F. COVER CONCRE PROVIDE WITH A SOURCE OF HEAT SUFFICIENT TO MAINTAIN 50 DE MINIMUM WHILE CURING.
5. HOT WEATHER: ACI 305R. CONCRETE TEMPERATURE FROM INITIAL M THROUGH FINAL CURE SHALL NOT EXCEED 90 DEGREES F. COOL INGREDIENTS BEFORE MIXING, OR SUBSTITUTE CHIP ICE FOR PART REQUIRED MIXING WATER OR USE OTHER SUITABLE MEANS TO CON CONCRETE TEMPERATURE TO PREVENT RAPID DRYING OF NEWLY CONCRETE. SHADE THE FRESH CONCRETE AND START CURING AS S THE SURFACE OF THE FRESH CONCRETE IS SUFFICIENTLY HARD T CURING WITHOUT DAMAGE.
6. ALL EXPOSED EDGES OF CONCRETE SHALL BE CHAMFERED ¾"x 4
7. ALL CONCRETE CONSTRUCTION SHALL BE IN ACCORDANCE WITH AC

NOTE: THE CONTRACTOR SHALL NOTIFY ALL AREA UTILI TO COMMENCING WORK ON THIS CONTRACT, IN A STATE AND LOCAL REQUIREMENTS.

NOTE: THESE PLANS ARE ACCOMPANIED BY A PROJECT TITLE. THESE DOCUMENTS ARE INTERRELATED A BE USED TOGETHER.

NO.	BY	DATE	REVISION
3.			
2.			
1.			

PROJECT: **LANDFILL No. 3 - PHASE 3 & 4 CO**
DOMTAR PAPER COMPANY
PLYMOUTH, NORTH CARO

SHEET TITLE:
MISCELLANEOUS DETAI

DRAWN BY: stormerl	SCALE:	PROJ. NO	
CHECKED BY: KDP		FILE NO.	
APPROVED BY: TWM	DATE PRINTED:	SH	
DATE: DECEMBER 2010			

Domtar

RMT

NORTH
LICE

Ref File 1 = J:\00794\45\ref\24x36ref.dgn (1) RFG
Ref File 2 = no ref name (2) no ref logo
Ref File 3 = no ref name (3) no ref logo
Ref File 4 = no ref name (4) no ref logo
Ref File 5 = no ref name (5) no ref logo
Ref File 6 = no ref name (6) no ref logo
Ref File 7 = no ref name (7) no ref logo
Ref File 8 = no ref name (8) no ref logo
Ref File 9 = no ref name (9) no ref logo
Ref File 10 = no ref name (10) no ref logo
(1) no ref levels
(2) no ref levels
(3) no ref levels
(4) no ref levels
(5) no ref levels
(6) no ref levels
(7) no ref levels
(8) no ref levels
(9) no ref levels
(10) no ref levels
ot Date = Tue Jan 11 13:32:29 2011
ing Scale = 1:1

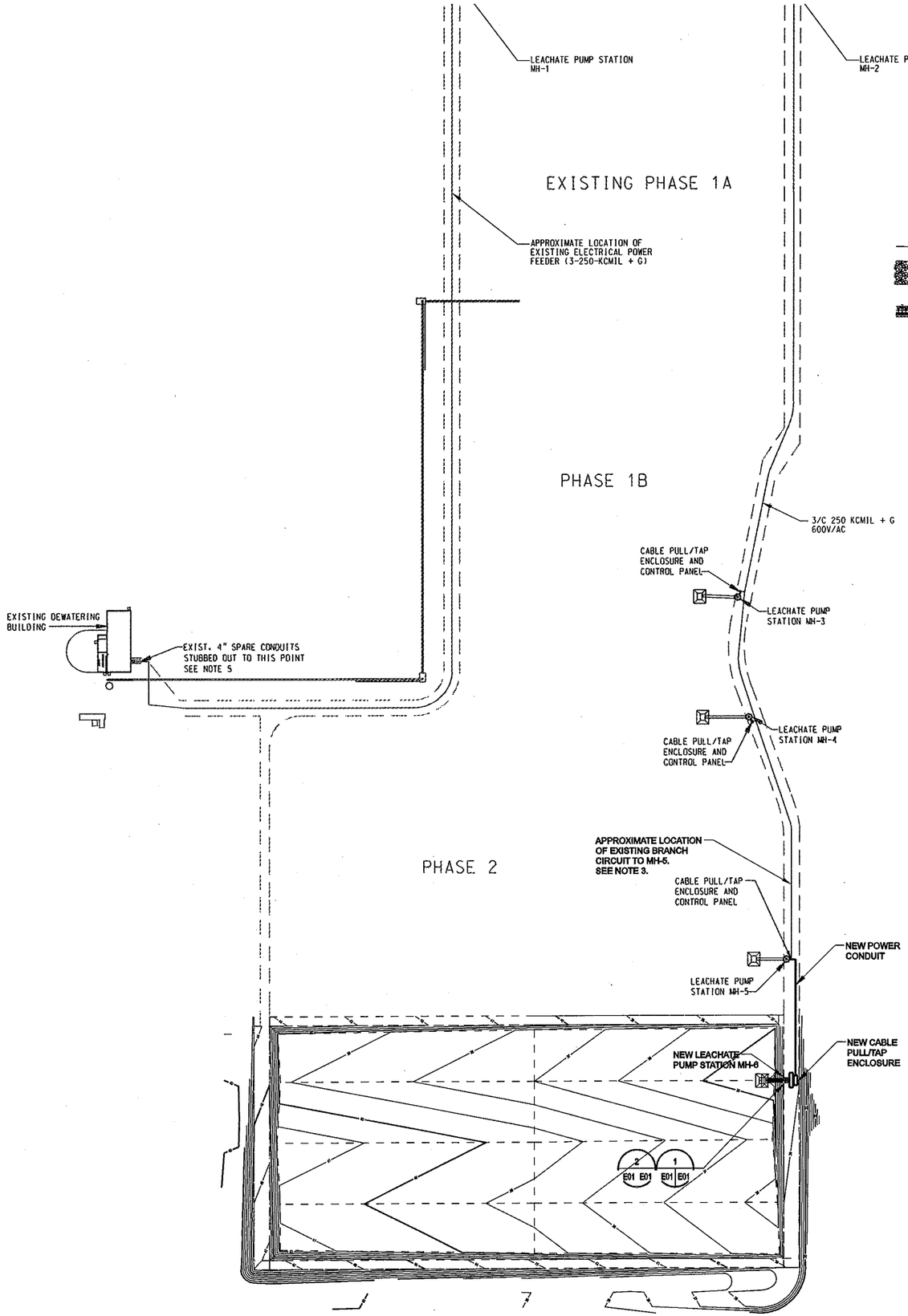

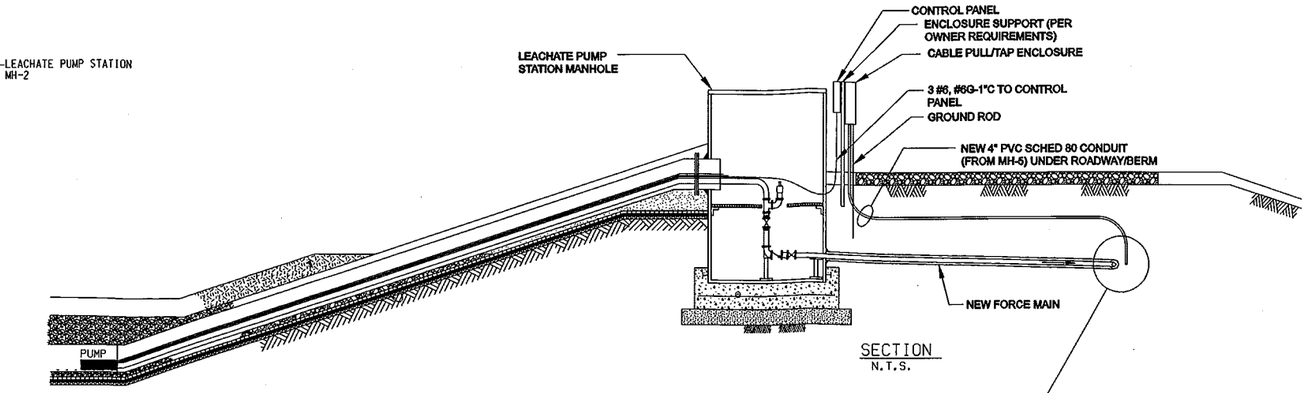

SECTION
N.T.S.

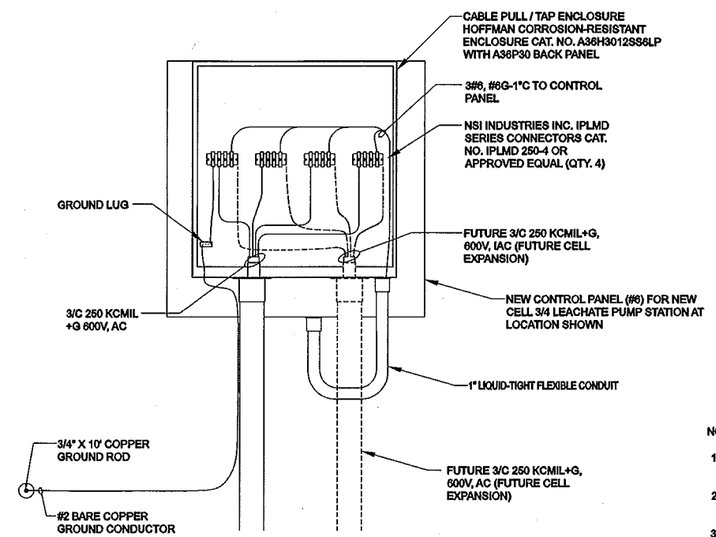

DETAIL 2 / E01
NTS

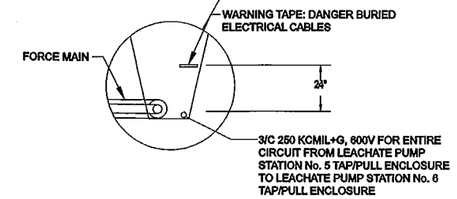

DETAIL 1 / E01
NTS

NOTES:

1. PROVIDE ALL WORK IN ACCORDANCE WITH THE 2008 NEC, AND ALL APPLICABLE SPECIFIED BY OWNER, STATE AND LOCAL CODE REQUIREMENTS.
2. ELECTRICAL CONTRACTOR SHALL PROVIDE ALL LABOR, MATERIALS, AND AS REQUIRED TO COMPLETE THE ENTIRE ELECTRICAL PORTION OF THIS PROJECT.
3. ELECTRICAL CONTRACTOR SHALL ASSIST OWNER AS NEEDED TO FIELD VERIFY AND DOCUMENT, THE ACTUAL LOCATION OF THE UNDERGROUND BRANCH FEEDER TO EXISTING LEACHATE PUMP STATION #5.
4. ELECTRICAL CONTRACTOR SHALL COORDINATE WITH OWNER, THE PROCUREMENT OF TWO NEW LEACHATE PUMPS (EPG OR EQUAL), MODEL 12-8 WITH 8 IMPELLER STAGES, 5.0 H.P., 460V/60Hz WITH 100 FT. OF POWER & SS LIFTING CABLE CAPABLE OF PRODUCING 60GPM @ 172 TDH, PUMP CONTROL PANEL, TRANSDUCERS AND TRANSDUCER CABLES FOR CONNECTION TO THE CONTROL PANEL.
5. MULTICONDUCTOR CABLES SHALL BE TYPE MC XHHW WITH COPPER CONDUCTORS OKONITE CLX OR EQUAL.
6. PROVIDE NEW 250 kCMIL CONDUCTOR AS SPECIFIED, FROM EXISTING PULL/TAP ENCLOSURE AT MH-5 LEACHATE PUMP STATION, TO NEW PULL/TAP ENCLOSURE AT NEW MH-6 LEACHATE PUMP STATION.
7. ELECTRICAL CONTRACTOR SHALL COORDINATE THE TRENCHING OPERATION TO ROUTE THE NEW 250 KCMIL WIRE AND GROUND FROM MH-5 TO MH-6.

N

0 100 200 300 400
SCALE 1"= 100'

Domtar

NOTE: THE CONTRACTOR SHALL NOTIFY ALL AREA UTI
TO COMMENCING WORK ON THIS CONTRACT, IN
STATE AND LOCAL REQUIREMENTS.

NOTE: THESE PLANS ARE ACCOMPANIED BY A PROJEC
TITLE. THESE DOCUMENTS ARE INTERRELATED
BE USED TOGETHER.

NO.	BY	DATE	REVISION
3.			
2.			
1.			

PROJECT: LANDFILL No. 3 - PHASE 3 & 4 C
DOMTAR PAPER COMPAN
PLYMOUTH, NORTH CARO

SHEET TITLE: ELECTRICAL PLAN

DRAWN BY:	stormerl	SCALE:	PROJ.
CHECKED BY:	KDP		FILE NO
APPROVED BY:	TWM	DATE PRINTED:	
DATE:	DECEMBER 2010		S

RMT

NORT
LIC