9232Map2003 - Batch No.___

13

WAKE Co.

2003

9232 2003
map

NC STATE UNIVERSITY
TRANSFER STATION
IMPROVEMENTS PROJECT #022055
PROJECT CODE #49624, ITEM #323

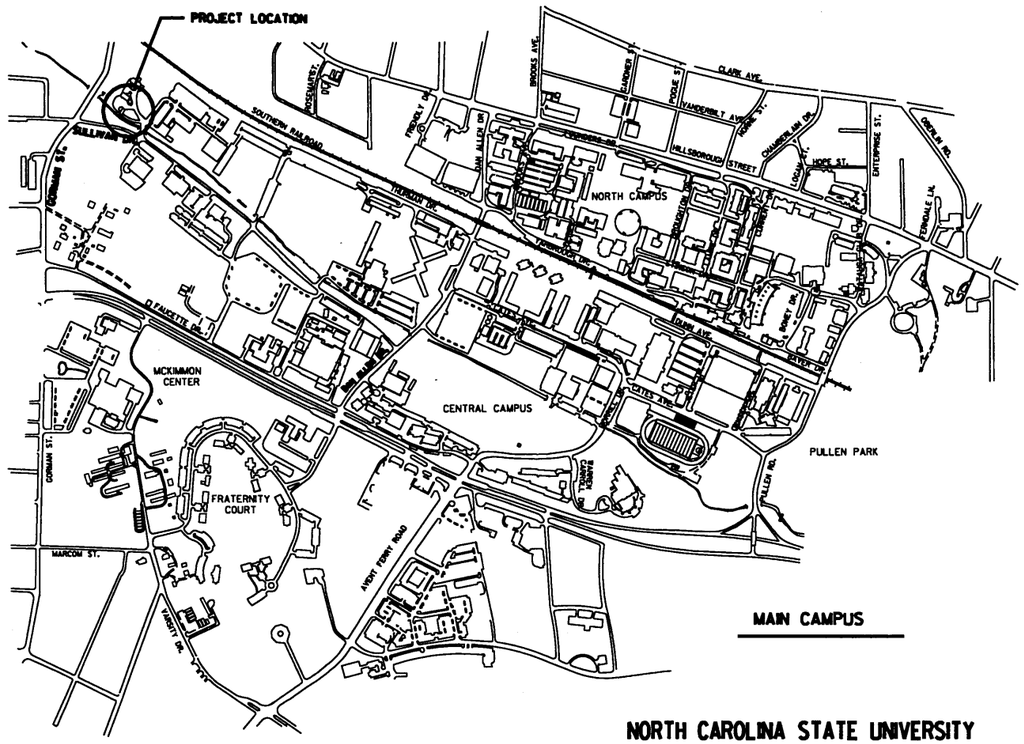

MAIN CAMPUS

NORTH CAROLINA STATE UNIVERSITY

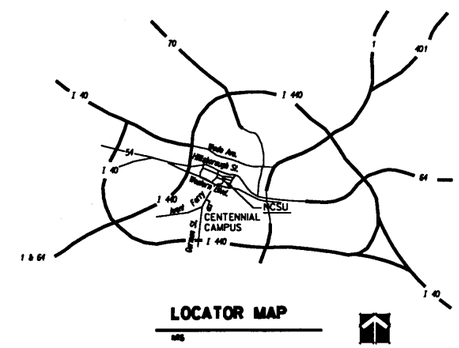

LOCATOR MAP

INDEX OF DRAWINGS

G-1	TITLE SHEET
G-2	GENERAL LEGEND AND BUILDING CODE SUMMARY
G-3	SITE PLAN
C-1	GRADING PLAN
C-2, C-3	CANOPY SECTIONS AND DETAILS
C-4	DRAIN AND PIPELINE PROFILE
C-5	AWNING DETAILS
C-6	DETAILS
L-1	POCKET WETLAND PLANTING SCHEDULE
L-2	POCKET WETLAND DETAILS
L-3	POCKET WETLAND DETAILS
S-1	CANOPY STRUCTURAL STEEL AND FOOTING

RECEIVED gar 6/5/03

JUN 2003 Received Solid Waste Section

NORTH CAROLINA PROFESSIONAL SEAL 14799 ENGINEER JOHN G. FUNK 6/4/03

AS-BUILT DRAWING
CONSTRUCTED IN SUBSTANTIAL
CONFORMANCE WITH CONTRACT DOCUMENTS

NO	REVISIONS	DRN	CHK	DATE
	AS-BUILT	JGF	JGF	6/4/03
2	FOR BID			7/10/02
1	CONSTRUCTION DOCUMENT PHASE REVIEW			
0	DESIGN DOCUMENT PHASE REVIEW			11/02/01

DRN / DES / CHK / APP

Copyright © 2001 EARTH TECH all rights reserved.

EARTH TECH
A tyco INTERNATIONAL LTD. COMPANY
701 Corporate Center Drive, Suite 475
Raleigh, NC 27607
(919) 854-6200 Fax (919) 854-6259

NORTH CAROLINA STATE UNIVERSITY
TRANSFER STATION
IMPROVEMENTS PROJECT

DATE	NOVEMBER, 2001
PROJECT NO	35507
FILENAME	
SHEET NO	
DRAWING NO	02-G-1

...\cadd\TRANS-STATION\title.dgn 06/04/2003 10:33:48 AM

GENERAL LEGEND

DISCIPLINE IDENTIFIER

DISCIPLINE	DISCIPLINE IDENTIFIER	DISCIPLINE STANDARD DETAIL NUMBERS
GENERAL	G	NONE
CIVIL	C	02-000 TO 02-999
ARCHITECTURAL	A	07-000 TO 07-999
STRUCTURAL	S	08-000 TO 08-999
PROCESS-MECHANICAL	M	06-000 TO 06-499
INSTRUMENTATION & CONTROL	N	06-500 TO 06-999
PLUMBING	P	09-400 TO 09-499
HVAC	H	09-000 TO 09-399 & 09-500 TO 09-999
ELECTRICAL	E	10-000 TO 10-999
REMOVALS	R	NONE

SECTION DESIGNATION

SECTION DESIGNATIONS USE LETTERS

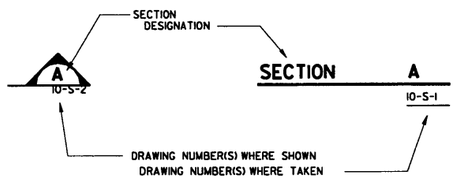

DETAIL DESIGNATION

DETAIL DESIGNATIONS USE NUMBERS

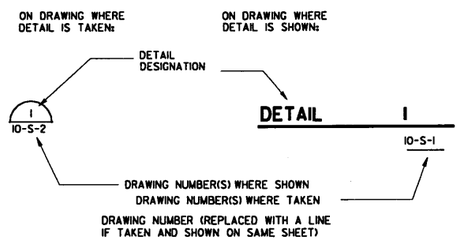

DRAWING NUMBER DESIGNATION

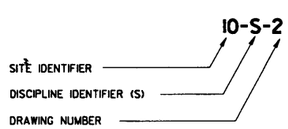

PLAN NOTE DESIGNATION

1 PLAN NOTE, SEE LIST ON SAME DRAWING

REMOVAL NOTE DESIGNATION

1 REMOVAL NOTE, SEE LIST ON SAME DRAWING

NOTE:
1. THIS IS A STANDARD LEGEND. NOT ALL THE INFORMATION SHOWN ON THIS LEGEND IS USED ON THIS PROJECT.

BUILDING CODE SUMMARY

Name of Project: North Carolina State University Transfer Station Improvements
Address: North Carolina State University Motor Pool Road Raleigh North Carolina
Proposed Use: Storm water control, at solid waste transfer station
Owner/Contact Person: Facility Planning & Design, Ms. Jill Coleman Phone# 919-515-8063
Code Enforcement Jurisdiction: ----------

DESIGNER OF RECORD

DESIGNER	NAME	LICENSE #	TELEPHONE #
Architectural	NA	--------	----------
Electrical	NA	--------	----------
Plumbing	NA	--------	----------
Mechanical	NA	--------	----------
Structural	John G. Funk	14799	919-854-6239
Sprinkler-Standpipe	NA	--------	---------
Fire Alarm	NA	--------	---------
Other	NA	--------	---------

BUILDING DATA

Occupancy: Assembly X Business Educational Mercantile
Hazardous: Factory-Industrial Institutional (unrestricted)
Institutional (restricted) Use Condition _____
Residential Storage

Mixed Occupancy? Yes No X Separation _____ hr.

Construction Type: I II III IV(P) IV(UP) X
V(P) V(UP) VI(P) VI(UP)
Mixed Construction Yes X No Type _____

Sprinkled Yes No X (1313R130) _____
Fire District Yes X No
Building Height 16 Feet 1 Number of Stories
Mezzanine Yes No X
High Rise? Yes No X

Gross Building Area (Footprint) Sq. Ft
1st Floor 830
Total Gross Area 830 Sq. Ft
Area increase: Yes No X

FIRE RESISTANCE RATINGS

Party/Firewalls	NA. Open canopy structure with no walls.
Exterior bearing walls	NA. Open canopy structure with no walls.
Exterior non-bearing walls	NA. Open canopy structure with no walls.
Interior walls	NA. Open canopy structure with no walls.

LIFE SAFETY SYSTEM

Emergency Lighting and Exit Signs	Yes	No X
Fire Alarm and Smoke Detection Systems	Yes	No X
Panic Hardware	Yes	No X

EXIT REQUIREMENTS

Dead end limit-maximum condition NA

Travel distance to exit-maximum conditions 16 Feet

Number of exits: NA. Not an occupied space. Canopy open at either end.

DESIGN LOADS

Roof live load: 16 psf

Wind: Zone 80 mph Importance Factor 1

ASCE-7 Exposure B

Floor: NA

Snow: 15 psf

Lateral design control: Earthquake ___ Wind X

Calculated Wind Base Shears (for MWFRS) V_x = 2001b
V_y = 4601b

SEISMIC PERFORMANCE CATEGORY B

Effective peak velocity-related acceleration	A_v = 0.075
Peak acceleration coefficient	A_A = 0.050
Seismic Hazard Exposure Group	SHEG = 1
Seismic Performance Group	SPC = B
Site coefficient	S = 1.2

Basic structural system: X - Moment frame, Y - Braced Frame

Response modification factor	R_x = 4.5, R_y = 5
Deflection amplification factor	Cdy = 4
Building height, feet	H = 16 ft
Seismic base shear	V = 185 lbs
MODAL ANALYSIS PROCEDURE:	NA

SOIL BEARING CAPACITIES:

Field Test 2000 psf (Engineering Consulting Services, LTD October 30, 2001)

PARKING SPACES: None Required None Provided

NORTH CAROLINA PROFESSIONAL SEAL 14799 ENGINEER JOHN G. FUNK 6/4/03

AS-BUILT DRAWING
CONSTRUCTED IN SUBSTANTIAL
CONFORMANCE WITH CONTRACT DOCUMENTS

NO	REVISIONS	DRN	CHK	DATE
	AS-BUILT	JGF	JGF	6/4/03
2	FOR BID			7/10/02
1	CONSTRUCTION DOCUMENT PHASE REVIEW			3/15/02
0	DESIGN DOCUMENT PHASE REVIEW			11/02/01

DRN DES CHK APP

Copyright © 2001 EARTH TECH all rights reserved.

EARTH TECH
A tyco INTERNATIONAL LTD. COMPANY
701 Corporate Center Drive, Suite 475
Raleigh, NC 27607
(919) 854-6200 Fax (919) 854-6259

NORTH CAROLINA STATE UNIVERSITY
TRANSFER STATION IMPROVEMENTS PROJECT

GENERAL LEGEND AND BUILDING CODE SUMMARY

DATE NOVEMBER, 2001
PROJECT NO 35507
FILENAME
SHEET NO
DRAWING NO 02-G-2

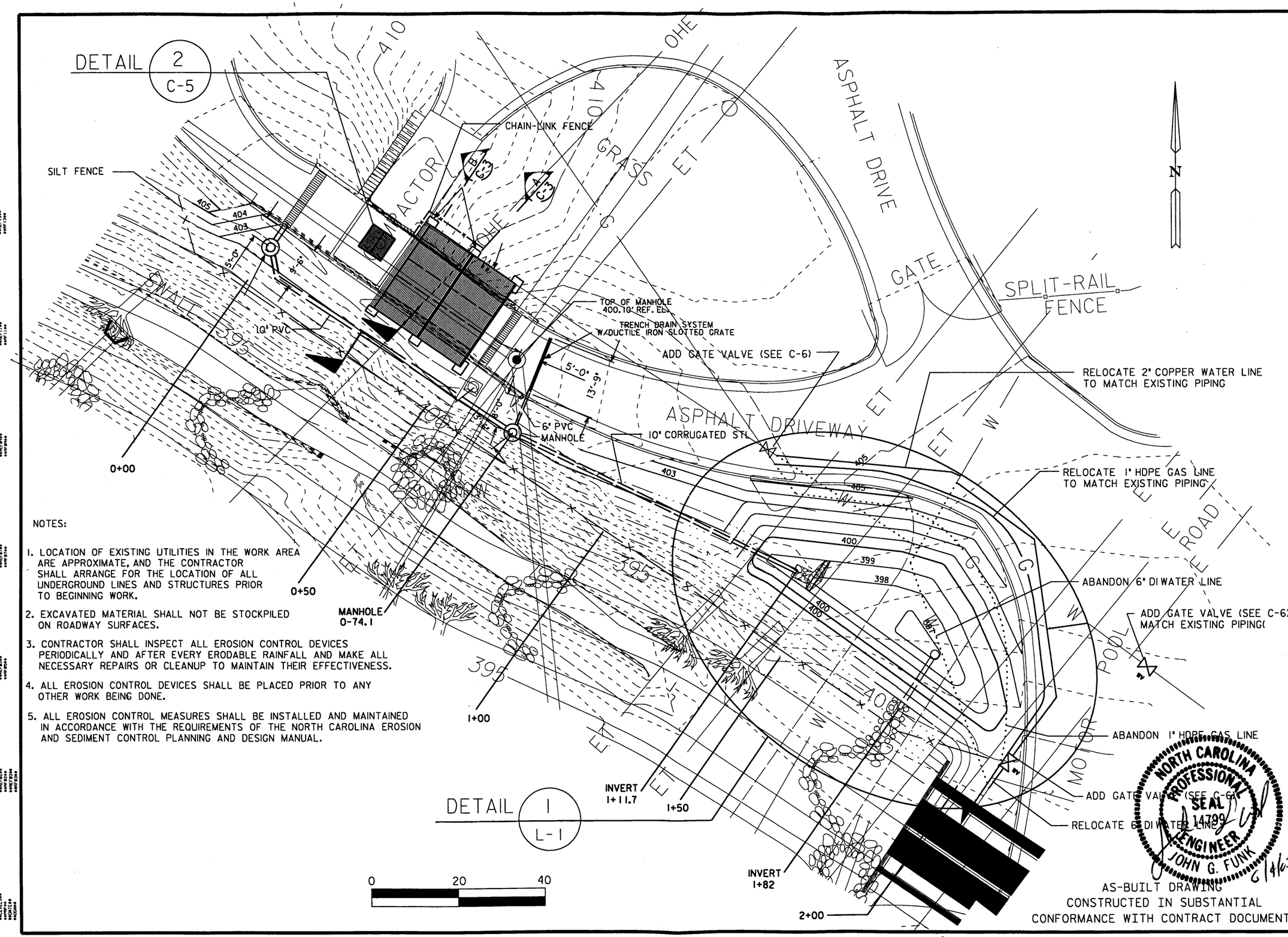

NOTES:

1. LOCATION OF EXISTING UTILITIES IN THE WORK AREA ARE APPROXIMATE, AND THE CONTRACTOR SHALL ARRANGE FOR THE LOCATION OF ALL UNDERGROUND LINES AND STRUCTURES PRIOR TO BEGINNING WORK.
2. EXCAVATED MATERIAL SHALL NOT BE STOCKPILED ON ROADWAY SURFACES.
3. CONTRACTOR SHALL INSPECT ALL EROSION CONTROL DEVICES PERIODICALLY AND AFTER EVERY ERODABLE RAINFALL AND MAKE ALL NECESSARY REPAIRS OR CLEANUP TO MAINTAIN THEIR EFFECTIVENESS.
4. ALL EROSION CONTROL DEVICES SHALL BE PLACED PRIOR TO ANY OTHER WORK BEING DONE.
5. ALL EROSION CONTROL MEASURES SHALL BE INSTALLED AND MAINTAINED IN ACCORDANCE WITH THE REQUIREMENTS OF THE NORTH CAROLINA EROSION AND SEDIMENT CONTROL PLANNING AND DESIGN MANUAL.

AS-BUILT DRAWING
CONSTRUCTED IN SUBSTANTIAL
CONFORMANCE WITH CONTRACT DOCUMENTS

NORTH CAROLINA PROFESSIONAL SEAL 14799 ENGINEER JOHN G. FUNK 6/4/03

NO	REVISIONS	DRN	CHK	DATE
	AS-BUILT	JGF	JGF	6/4/03
3	REVISE WATER LINE LOCATION AND MAT'L	---	---	
2	FOR BID	JGF	JGF	10/16/02
1	CONSTRUCTION DOCUMENT PHASE REVIEW			7/08/02
0	DESIGN DOCUMENT PHASE REVIEW	---	---	3/29/02 11/02/01

DRN JGF
DES ---
CHK JGF
APP ---

Copyright © 2001 EARTH TECH all rights reserved.

EARTH TECH
A tyco INTERNATIONAL LTD. COMPANY
701 Corporate Center Drive, Suite 475
Raleigh, NC 27607
(919) 854-6200 Fax (919) 854-6259

NORTH CAROLINA STATE UNIVERSITY
TRANSFER STATION IMPROVEMENTS PROJECT

SITE PLAN

DATE NOVEMBER, 2001
PROJECT NO 35507
FILENAME
SHEET NO
DRAWING NO 02-G-3

...\TRANS-STATION\siteplanrv1.dgn 06/04/2003 10:27:07 AM

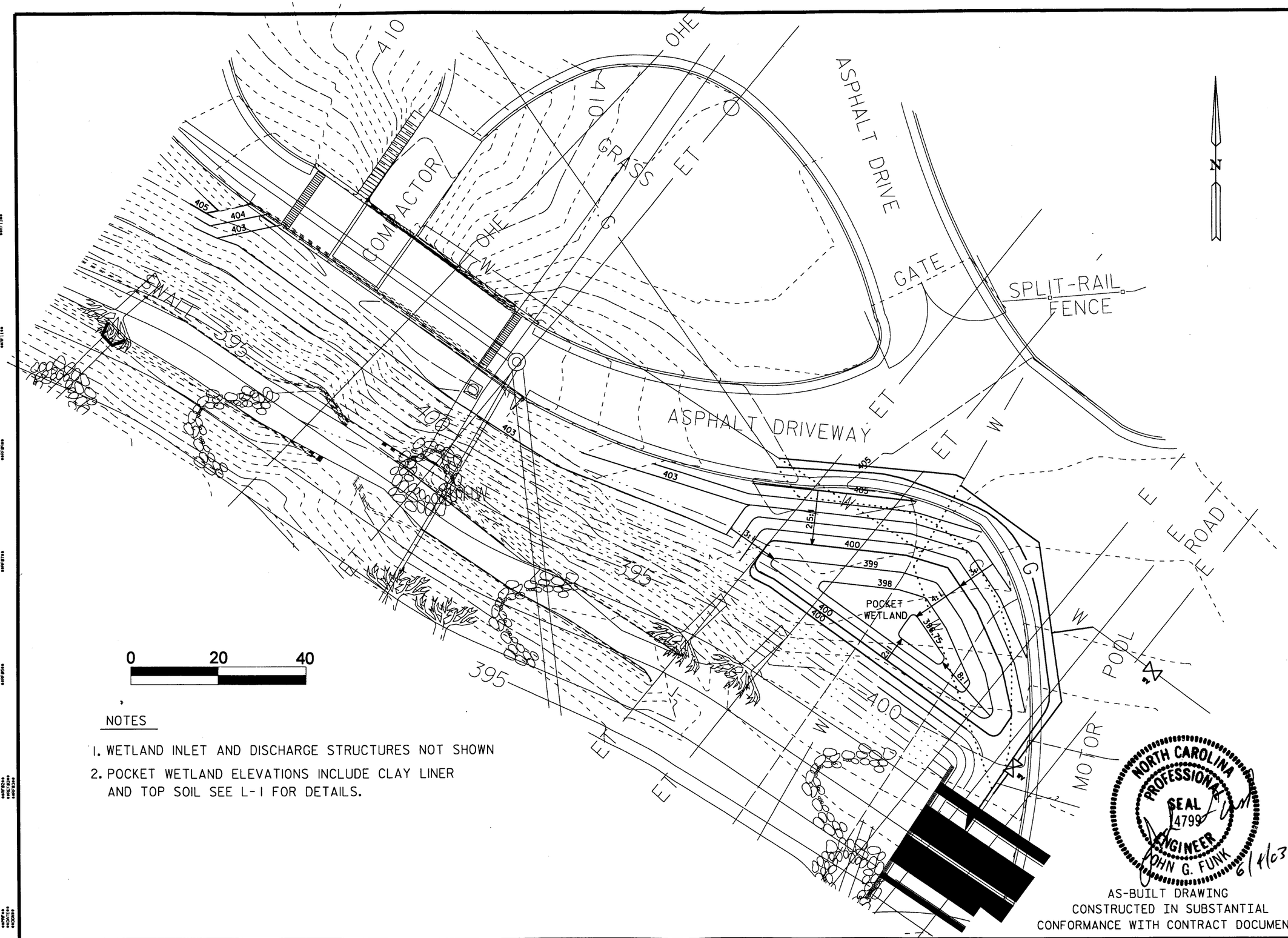

NOTES

1. WETLAND INLET AND DISCHARGE STRUCTURES NOT SHOWN
2. POCKET WETLAND ELEVATIONS INCLUDE CLAY LINER AND TOP SOIL SEE L-1 FOR DETAILS.

NORTH CAROLINA PROFESSIONAL SEAL 4799 ENGINEER JOHN G. FUNK 6/4/03

AS-BUILT DRAWING
CONSTRUCTED IN SUBSTANTIAL
CONFORMANCE WITH CONTRACT DOCUMENTS

NO	REVISIONS	DRN	CHK	DATE
	AS-BUILT	JGF	JGF	6/4/03
2	FOR BID			7/10/02
1	CONSTRUCTION DOCUMENT PHASE REVIEW			3/29/02
0	DESIGN DOCUMENT PHASE REVIEW			11/02/01

DRN
DES
CHK
APP

Copyright © 2001
Earth Tech all rights reserved.

EARTH TECH
A tyco INTERNATIONAL LTD. COMPANY
701 Corporate Center Drive, Suite 475
Raleigh, NC 27607
(919) 854-6200 Fax (919) 854-6259

NORTH CAROLINA STATE UNIVERSITY
TRANSFER STATION IMPROVEMENTS PROJECT

GRADING PLAN

DATE	NOVEMBER, 2001
PROJECT NO	35507
FILENAME	
SHEET NO	
DRAWING NO	02-C-1

...\cadd\TRANS-STATION\grading.dgn 06/04/2003 10:23:50 AM

NOTES:

1. MIN. CLEARANCE FROM TOP OF CANOPY TO NEUTRAL WIRE IS 10'-6" BASED ON INFORMATION PROVIDED BY CP&L.
2. HEIGHT OF LARGEST TRANSFER TRUCK IS 13'-11" BASED ON INFORMATION PROVIDED BY NCSU
3. PROVIDE STEEL FLASHING TO MATCH COLOR AND FINISH OF RIBBED STEEL ROOF PANELS.

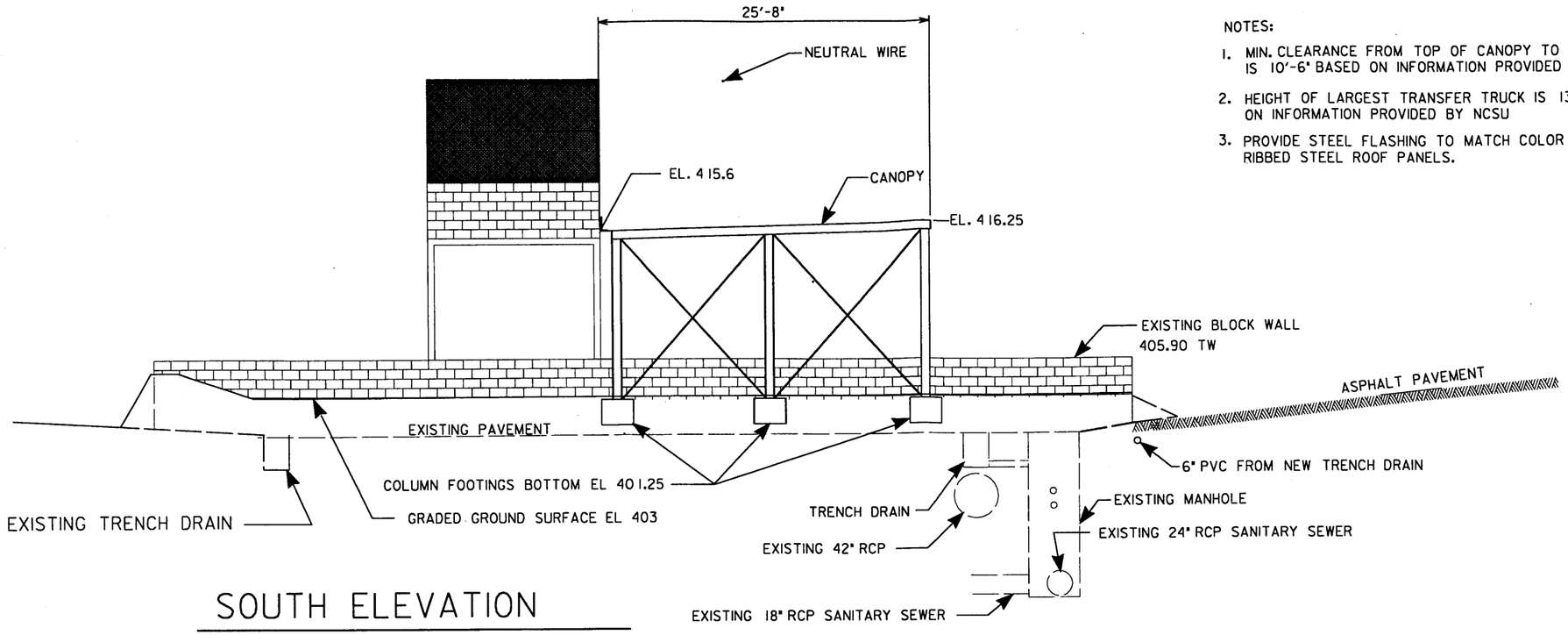

SOUTH ELEVATION

0 10 20

SCALE

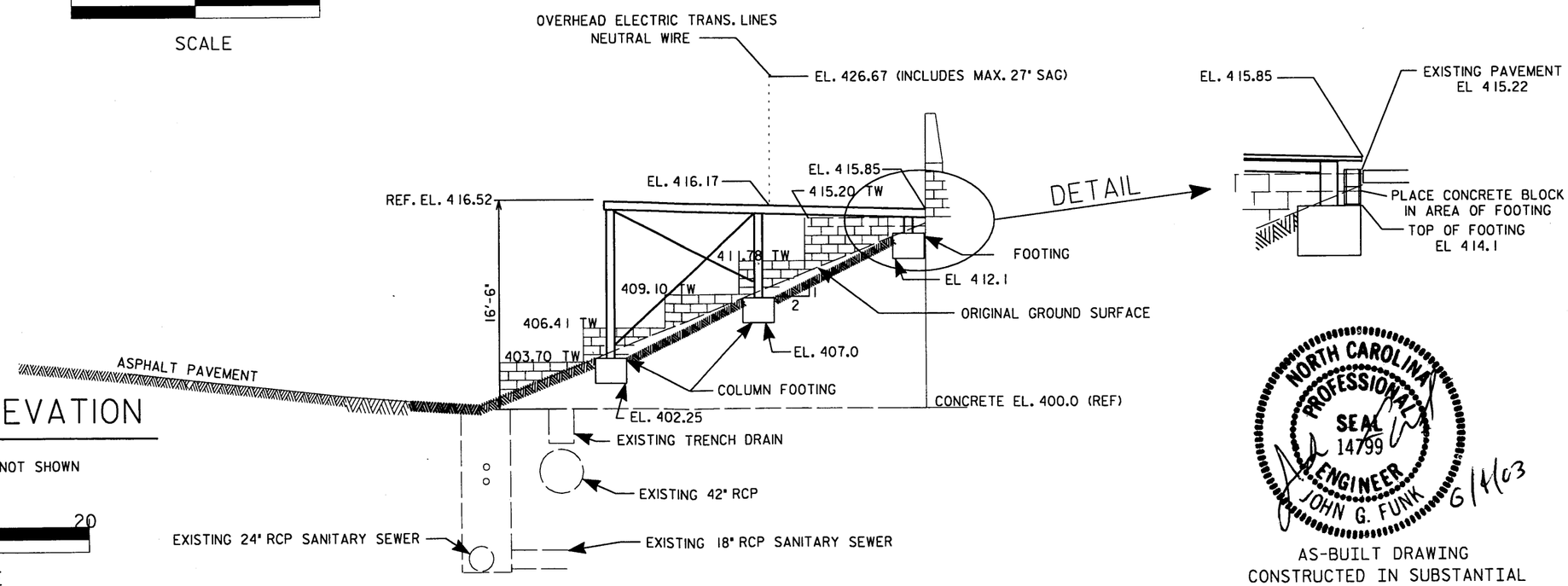

NORTH ELEVATION

NOTE: FENCE NOT SHOWN

0 10 20

SCALE

NORTH CAROLINA PROFESSIONAL SEAL 14799 ENGINEER JOHN G. FUNK 6/4/03

AS-BUILT DRAWING
CONSTRUCTED IN SUBSTANTIAL
CONFORMANCE WITH CONTRACT DOCUMENTS

NO	REVISIONS	DRN	CHK	DATE
2	FOR BID	---	---	7/08/02
1	DESIGN DOCUMENT PHASE REVIEW	---	---	11/02/01
0	FOR NC STATE UNIVERSITY REVIEW	---	---	07/16/01

AS-BUILT JGF JGF 6/4/03

DRN
DES
CHK
APP

Copyright © 2001 EARTH TECH all rights reserved.

EARTH TECH
A tyco INTERNATIONAL LTD. COMPANY
701 Corporate Center Drive, Suite 475
Raleigh, NC 27607
(919) 854-6200 Fax (919) 854-6259

NORTH CAROLINA STATE UNIVERSITY
TRANSFER STATION IMPROVEMENTS PROJECT

CANOPY SECTIONS & DETAILS

DATE NOVEMBER, 2001
PROJECT NO 35507
FILENAME
SHEET NO
DRAWING NO 02-C-2

...\cadd\TRANS-STATION\02-C-2.DGN 06/04/2003 10:09:51 AM

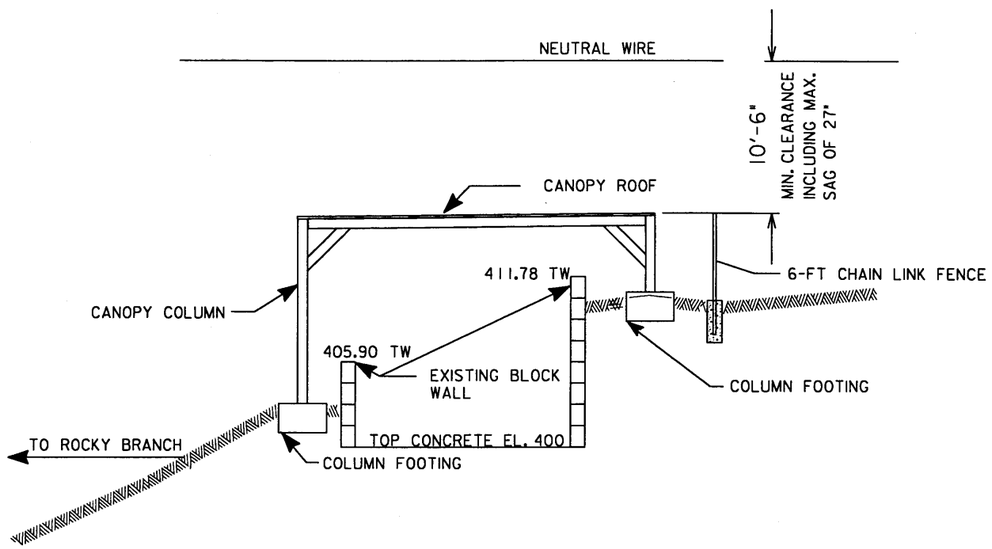

SECTION A / G-3

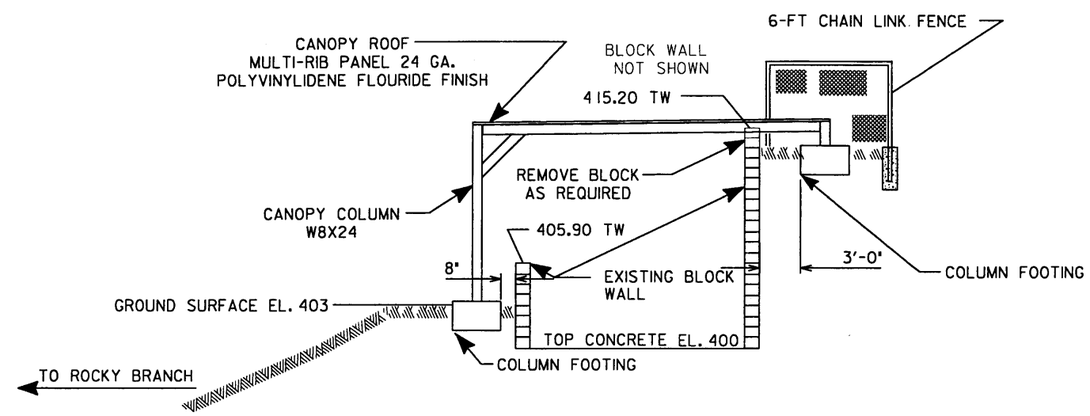

SECTION B / G-3

0 10 20

SCALE

NORTH CAROLINA PROFESSIONAL SEAL 14799 ENGINEER JOHN G. FUNK 6/4/03

AS-BUILT DRAWING
CONSTRUCTED IN SUBSTANTIAL
CONFORMANCE WITH CONTRACT DOCUMENTS

3	AS-BUILT	JGF	JGF	6/4/03
2	FOR BID			7/10/02
1	CONSTRUCTION DOCUMENT PHASE REVIEW			
0	FOR NC STATE UNIVERSITY REVIEW			07/16/01
NO	REVISIONS	DRN	CHK	DATE

DRN
DES
CHK
APP

Copyright © 2001
EARTH TECH all rights reserved.

EARTH TECH
A tyco INTERNATIONAL LTD. COMPANY
701 Corporate Center Drive, Suite 475
Raleigh, NC 27607
(919) 854-6200 Fax (919) 854-6259

NORTH CAROLINA STATE UNIVERSITY
TRANSFER STATION STORM WATER PROJECT

CANOPY SECTIONS & DETAILS

DATE	JUNE, 2001
PROJECT NO	35507
FILENAME	
SHEET NO	
DRAWING NO	02-C-3

...\cadd\TRANS-STATION\02-C-3.DGN 06/04/2003 11:13:51 AM

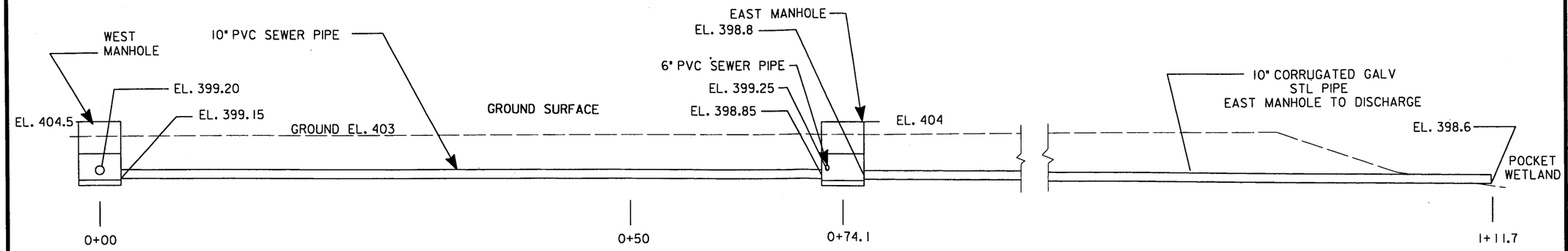

DRAINAGE PROFILE WEST DRAIN MANHOLE TO POCKET WETLAND

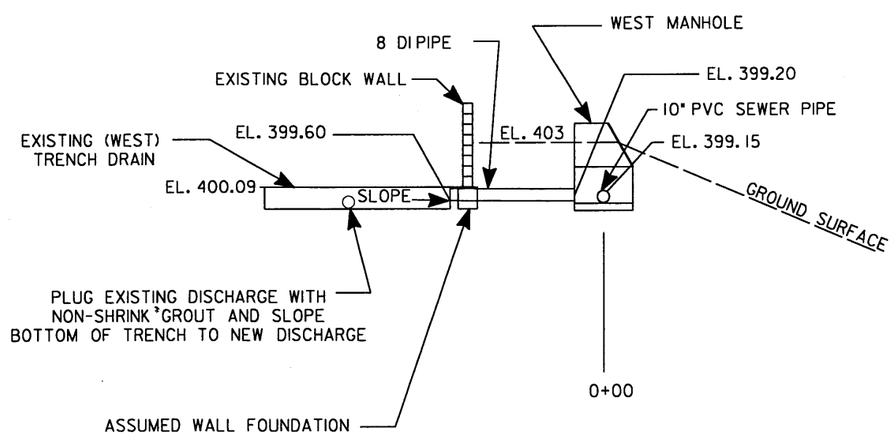

DRAINAGE PROFILE WEST DRAIN TO WEST MANHOLE

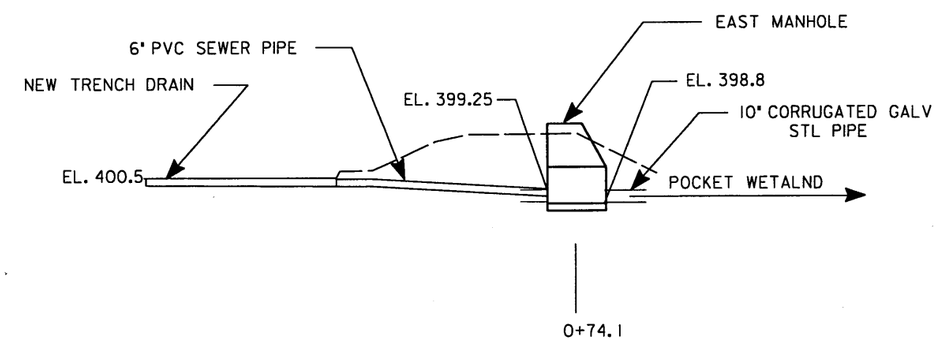

DRAINAGE PROFILE EAST DRAIN TO EAST MANHOLE

0 10 20

SCALE

NORTH CAROLINA PROFESSIONAL SEAL 14799 ENGINEER JOHN N. FUNK

6/4/03

BUILT DRAWING CONSTRUCTED IN SUBSTANTIAL CONFORMANCE WITH CONTRACT DOCUMENTS

NO	REVISIONS	DRN	CHK	DATE
	AS-BUILT	JGF	JGF	6/4/03
3	FOR BID	---		7/10/02
2	CONSTRUCTION DOCUMENT REVIEW			3/20/02
1	DESIGN DOCUMENT REVIEW			11/02/01
0	FOR NC STATE UNIVERSITY REVIEW	---		7/17/01

DRN
DES
CHK
APP

Copyright © 2001
EARTH TECH all rights reserved.

EARTH TECH
A tyco INTERNATIONAL LTD. COMPANY
701 Corporate Center Drive, Suite 475
Raleigh, NC 27607
(919) 854-6200 Fax (919) 854-6259

NORTH CAROLINA STATE UNIVERSITY
TRANSFER STATION IMPROVEMENTS PROJECT

DRAIN & PIPELINE PROFILE

DATE NOVEMBER, 2001
PROJECT NO 35507
FILENAME
SHEET NO
DRAWING NO 02-C-4

...\cadd\TRANS-STATION\02-C-4.DGN 06/04/2003 10:14:44 AM

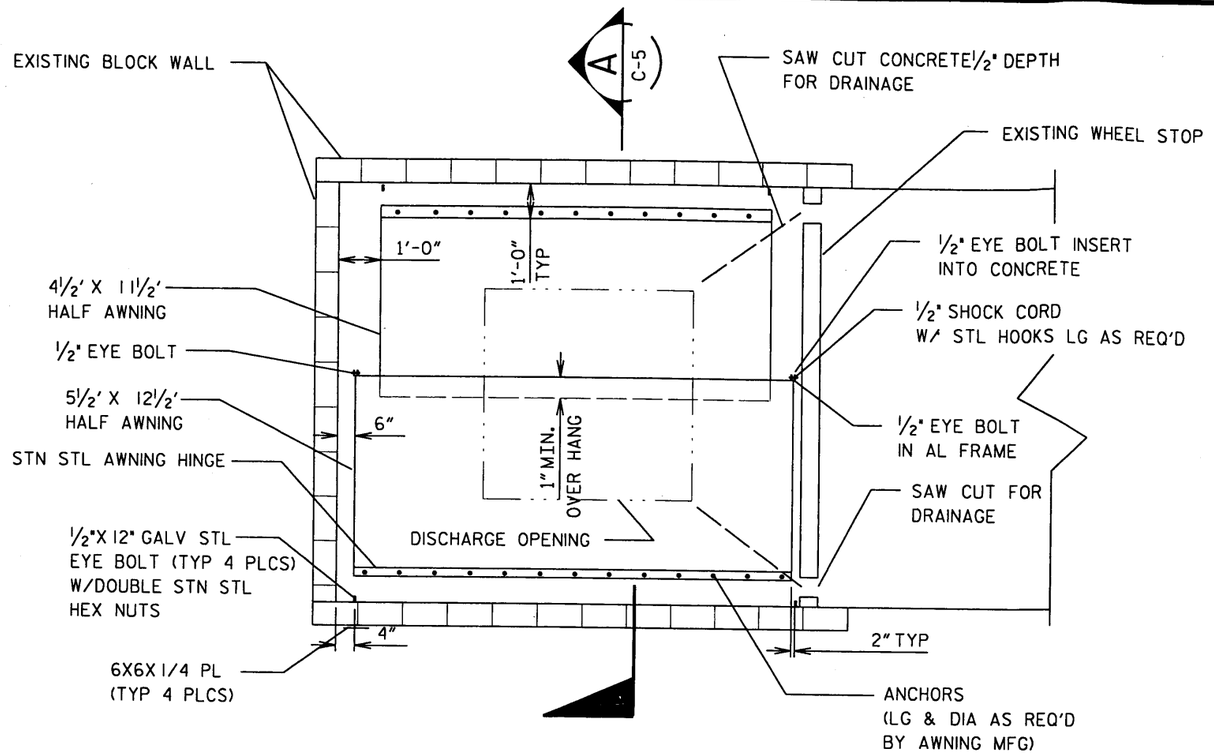

DETAIL 2 / G-3 AWNING PLAN VIEW

NOTES:

1. AWNING TO BE DESIGNED AND FABRICATED BY A FIRM EXPERIENCED IN MANUFACTURE OF CUSTOM AWNINGS.
2. AWNING FRAME SHALL BE STRUCTURAL ALUMINUM TUBING.
3. AWNING MATERIAL SHALL BE VINYL LAMINATE WITH POLYESTER SUBSTRATE, 16/17 OZ/SY.
4. SUBMIT COLOR CHART TO NCSU FOR SELECTION.
5. DESIGN AWNING FOR 5 PSF UNIFORM LIVE LOAD.

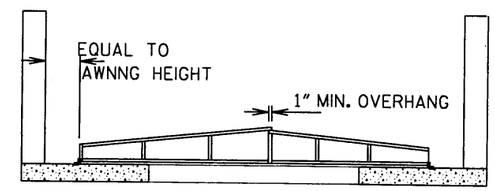

SECTION A / C-5

AWNING IN THE DOWN POSITION

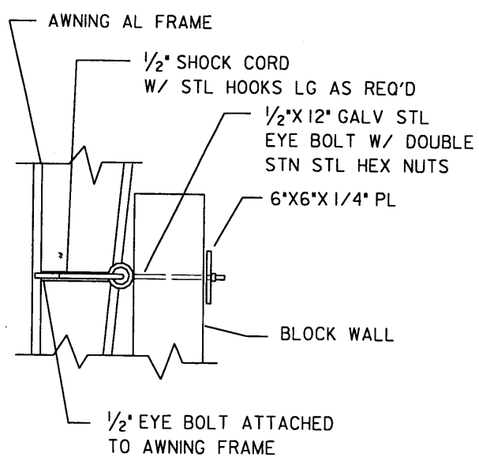

DETAIL 3 / C-5

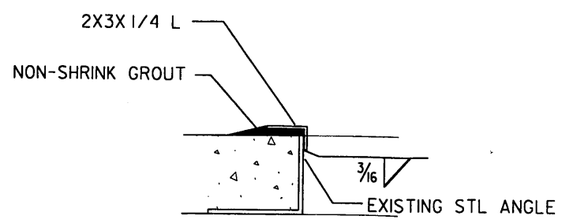

DETAIL 4 / C-5

TYP 4 SIDES OF OPENING, AND MITER CORNERS

DETAIL 3 / C-5

DETAIL 4 / C-5

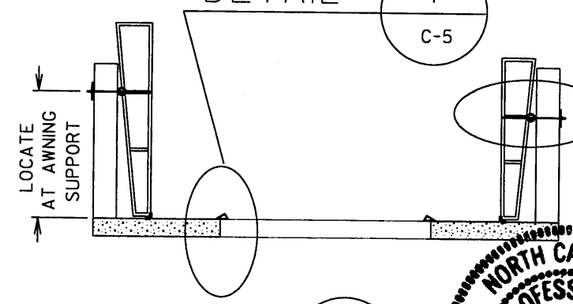

SECTION A / C-5

AWNING IN THE UP POSITION

NORTH CAROLINA PROFESSIONAL SEAL 14799 ENGINEER JOHN G. FUNK 6/4/03

AS-BUILT DRAWING
CONSTRUCTED IN SUBSTANTIAL
CONFORMANCE WITH CONTRACT DOCUMENTS

NO	REVISIONS	DRN	CHK	DATE
	AS BUILT	JGF	JGF	6/4/03
1	FOR BID			7/10/02
0	CONSTRUCTION DOCUMENT PHASE REVIEW			3-29-02

Copyright © 2001 Earth Tech all rights reserved.

DRN / DES / CHK / APP

EARTH TECH
A TYCO INTERNATIONAL LTD. COMPANY
701 Corporate Center Drive, Suite 475
Raleigh, NC 27607
(919) 854-6200 Fax (919) 854-6259

NORTH CAROLINA STATE UNIVERSITY
TRANSFER STATION
STORM WATER PROJECT

AWNING DETAILS

DATE NOVEMBER, 2001
PROJECT NO 35507
FILENAME
SHEET NO
DRAWING NO 02-C-5

...\cadd\TRANS-STATION\02-C-5.DGN 06/04/2003 11:10:02 AM

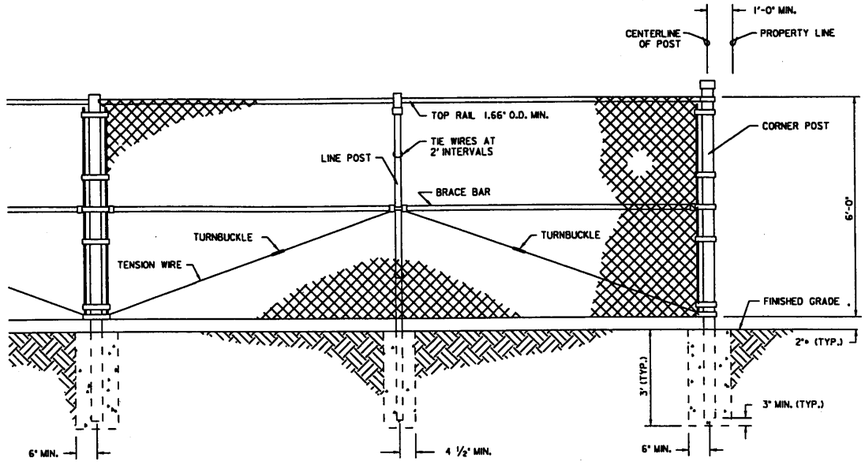

PULL POST LINE POST CORNER POST

CHAIN LINK FENCE

NOT TO SCALE

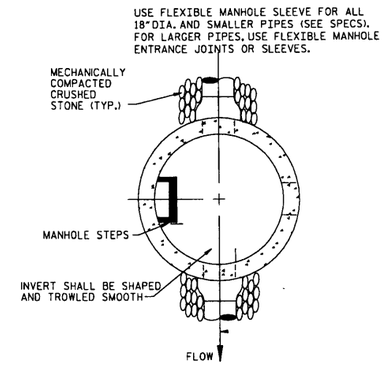

PLAN

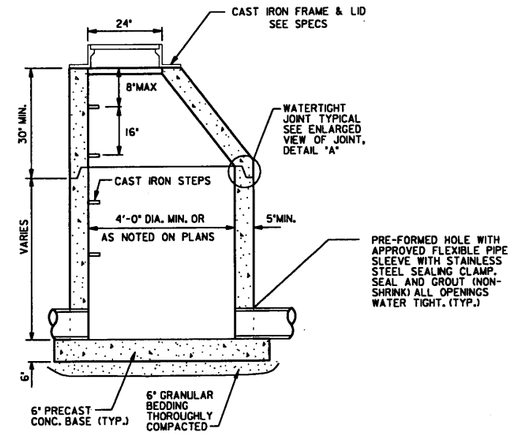

MANHOLE

NOTE: CAST WATERSTOP GASKETS INTO STRUCTURE AT PIPE PENETRATIONS.

NOT TO SCALE

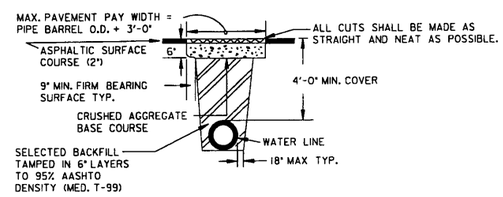

PAVEMENT CUT AND REPAIR DETAIL

N.T.S.

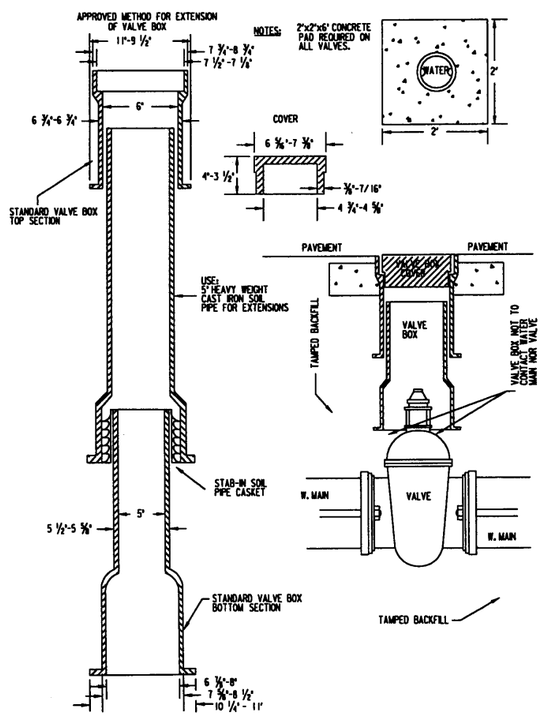

VALVE BOX INSTALLATION AND EXTENSION DETAIL

NORTH CAROLINA PROFESSIONAL SEAL 14799 ENGINEER JOHN G. FUNK 6/4/03

AS-BUILT DRAWING
CONSTRUCTED IN SUBSTANTIAL
CONFORMANCE WITH CONTRACT DOCUMENTS

NO	REVISIONS	DRN	CHK	DATE
2	FOR BID			7/10/02
1	CONSTRUCTION DOCUMENT PHASE REVIEW			3-29-02
0	DESIGN DOCUMENT REVIEW			11-06-01
	AS-BUILT	JGF	JGF	6/4/03

DRN
DES
CHK
APP

Copyright © 2001 EARTH TECH all rights reserved.

EARTH TECH
A tyco INTERNATIONAL LTD. COMPANY
701 Corporate Center Drive, Suite 475
Raleigh, NC 27607
(919) 854-6200 Fax (919) 854-6259

NORTH CAROLINA STATE UNIVERSITY
TRANSFER STATION IMPROVEMENTS PROJECT

DETAILS

DATE	NOVEMBER, 2001
PROJECT NO	35507
FILENAME	
SHEET NO	
DRAWING NO	02-C-6

...\cadd\TRANS-STATION\details.dgn 06/04/2003 10:19:08 AM

	Key	Scientific Name	Common Name	LS	B&B	BR	Cont.	Plug	Peat pot	Seed %	Remarks
Permanent Seeding Mixture		*Arundinaria gigantea*	Giant Cane							15	Apply at 5 lbs/acre, .1 acres total area. No more than 5% each of deertongue and switchgrass.
		Carex lupulina	Hop Sedge							2	
		Elymus virginicus	Virginia Wildrye							15	
		Eupatorium fistulosum	Joe Pye Weed							2	
		Hystrix patula	Bottle-brush Grass							2	
		Itea virginica	Virginia Willow							5	
		Juncus effusus	Soft Rush							15	
		Leersia oryzoides	Rice Cut Grass							15	
		Lobelia cardinalis	Cardinal Flower							1	
		Panicum clandestinum	Deertongue							5	
		Panicum virgatum	Switchgrass							5	
		Scirpus americanus	Three-square Bulrush							1	
		Scirpus cyperinus	Woolgrass							2	
		Uniola latifolia	River Oats							15	

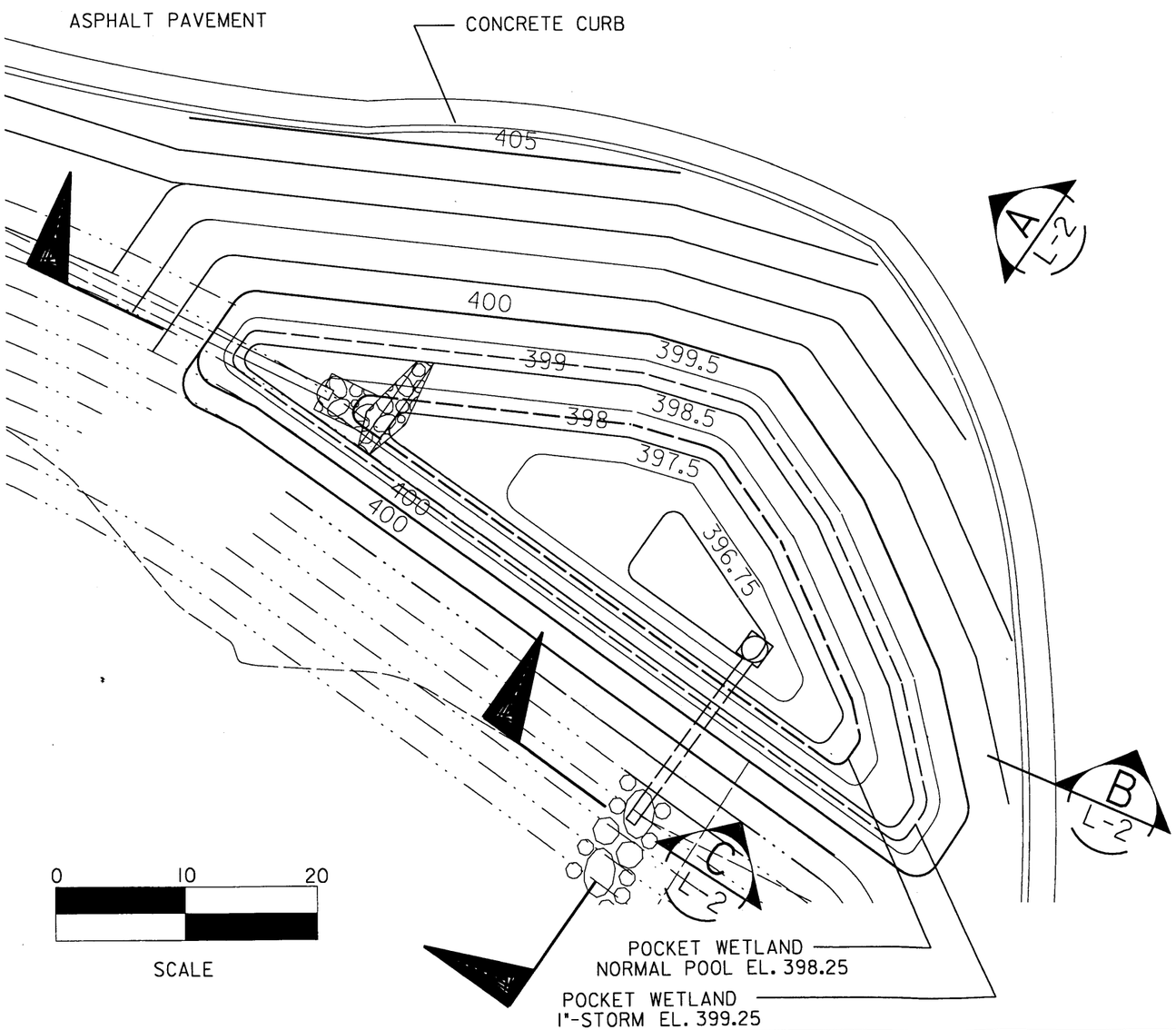

NOTES:

1. TEMPORARY SEEDING: RYE GRAIN AT THE RATE OF 50 LB/ACRE IN SPRING, FALL, AND WINTER. BROWN-TOP MILLET AT THE RATE OF 40 LB/ACRE IN SUMMER
2. PERMANENT SEEDING SHALL OCCUR IN CONJUNCTION WITH TEMOPRARY SEEDING.
3. APPLY SEED MIX A TO ALL AREAS DISTURBED BY CONSTRUCTION.
4. SEED SHALL BE TILLED INTO THE SOIL TO A DEPTH OF 2-INCHES.
5. ALL GROUND COVERS SHALL BE FERTILIZED WITH A 10-6-4 ANALYSIS FERTILIZER AS A WET APPLICATION RATES OF 3 LBS PER 100 SQUARE FEET.

SOIL PREPARATION OF DISTURBED AREAS

1. SURFACE WATER CONTROL MEASURES TO BE INSTALLED ACCORDING TO PLAN.
2. DISTURBED AREAS SHALL BE RIPPED OR TILLED. DISTURBED AREAS FROM STREET EDGE TO TOP OF BANK SHALL BE RIPPED AFTER ADDING LIME AND FERTILIZER. THESE SAME AREAS SHALL BE TILLED IF DEEMED NECESSARY BY THE ENGINEER
3. LOOSE ROCKS, ROOTS AND OTHER OBSTRUCTIONS SHALL BE REMOVED FROM THE SURFACE SO THAT THEY WILL NOT INTERFERE WITH ESTABLISHMENT AND MAINTENANCE OF VEGETATION. SURFACE FOR FINAL PLANTING AREA PREPARATION, AT FINISH GRADES SHOWN, SHALL BE REASONABLY SMOOTH AND UNIFORM.
4. SOIL TEST SHALL BE TAKEN, AND LIME AND FERTILIZER PROVIDED ACCORDING TO NCDA SOIL TEST REPORT FOR HARDWOOD TREES.
5. LIME AND FERTILIZER SHALL BE APPLIED UNIFORMLY AND MIXED WITH THE SOIL DURING PLANTING AREA PREPARATION.

SURFACE STABILIZATION

GRADED SLOPES AND FILLS-THE ANGLE FOR GRADED SLOPES AND FILLS SHALL BE NO GREATER THAN THE ANGLE WHICH CAN BE RETAINED BY VEGETATIVE COVER OR OTHER ADEQUATE EROSION CONTROL DEVICES OR STRUCTURES. IN ANY EVENT, SLOPES LEFT EXPOSED SHALL, WITHIN 15 WORKING DAYS OF COMPLETION OF ANY PHASE OF GRADING, BE PLANTED OR OTHERWISE PROVIDED WITH GROUND COVER, DEVICES, OR STRUCTURES SUFFICIENT TO RESTRAIN EROSION.

- EROSION CONTROL MEASURES SHALL BE IMPLEMENTATED IN ACCORDANCE WITH NORTH CAROLINA EROSION AND SEDIMENT CONTROL MANUAL
- MULCH TO BE TACKED OR MECHANICALLY TIED DOWN WITHIN TWO DAYS AFTER MULCH IS SPREAD.

NORTH CAROLINA PROFESSIONAL SEAL 14799 ENGINEER JOHN G. FUNK 6/4/03

AS-BUILT DRAWING
CONSTRUCTED IN SUBSTANTIAL
CONFORMANCE WITH CONTRACT DOCUMENTS

NO	REVISIONS	DRN	CHK	DATE
	AS-BUILT	JGF	JGF	6/4/03
1	FOR BID			7/10/02
0	CONSTRUCTION PHASE REVIEW			

DRN / DES / CHK / APP

Copyright © 2001 EARTH TECH all rights reserved.

EARTH TECH
A tyco INTERNATIONAL LTD. COMPANY
701 Corporate Center Drive, Suite 475
Raleigh, NC 27607
(919) 854-6200 Fax (919) 854-6259

NORTH CAROLINA STATE UNIVERSITY
TRANSFER STATION IMPROVEMENTS PROJECT

POCKET WETLAND DETAIL AND PLANTING SCHEDULE

DATE	NOVEMBER, 2001
PROJECT NO	35507
FILENAME	
SHEET NO	
DRAWING NO	02-L-1

...\TRANS-STATION\PLANTING.DGN 06/04/2003 10:25:20 AM

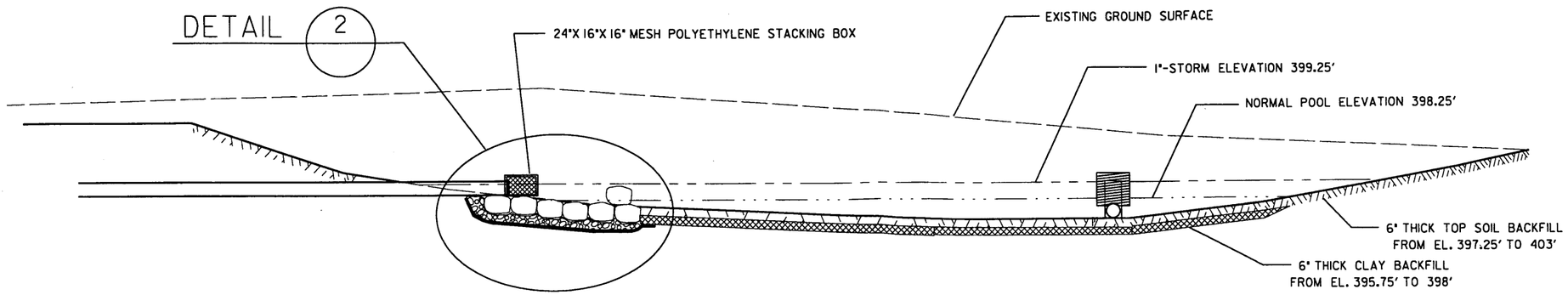

SECTION B / L-1

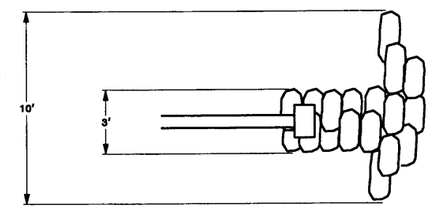

DETAIL 2 / L-2 WETLAND INLET PLAN VIEW

NOTES:

FLAT ROCKS OF A MINIMUM SIZE OF 2' X 2' (+/- .5') SHALL BE USED TO CONSTRUCT THIS STRUCTURE.

THE DETAILS BELOW ARE MEANT TO ASSIST THE CONTRACTOR SINCE THE STRUCTURE WILL HAVE TO BE ADJUSTED TO FIT BASED ON THE AVAILABLE ROCKS.

SECTION A / L-1

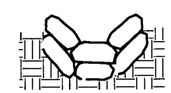

SECTION C / L-1

NOTES:

FLAT ROCKS OF A MINIMUM SIZE OF 2' X 2' (+/- .5') SHALL BE USED TO CONSTRUCT THIS STRUCTURE. THE ROCKS SHALL BE ALIGNED IN A SHINGLE ARRANGEMENT SO THAT THE JOINT BETWEEN TWO HEADER ROCKS IS DIRECTLY ABOVE THE CENTER OF THE UNDERLYING FOOTER ROCK.

STEP DISCHARGE WILL BE TIED INTO THE ELEVATION OF THE CROSS VANE ON THE STREAMBANK.

THE DETAILS BELOW ARE MEANT TO ASSIST THE CONTRACTOR SINCE EACH STEP WILL HAVE TO BE ADJUSTED TO FIT BASED ON THE AVAILABLE ROCKS.

NORTH CAROLINA PROFESSIONAL SEAL 14799 ENGINEER JOHN G. FUNK 6/4/03

AS-BUILT DRAWING
CONSTRUCTED IN SUBSTANTIAL
CONFORMANCE WITH CONTRACT DOCUMENTS

NO	REVISIONS	DRN	CHK	DATE
	AS-BUILT	JGF	JGF	6/4/03
1	FOR BID			7/10/02
0	CONSTRUCTION PHASE REVIEW			

DRN
DES
CHK
APP

Copyright © 2001 EARTH TECH all rights reserved.

EARTH TECH
A tyco INTERNATIONAL LTD. COMPANY
701 Corporate Center Drive, Suite 475
Raleigh, NC 27607
(919) 854-6200 Fax (919) 854-6259

NORTH CAROLINA STATE UNIVERSITY
TRANSFER STATION
IMPROVEMENTS PROJECT

POCKET WETLAND DETAILS

DATE	NOVEMBER, 2001
PROJECT NO	35507
FILENAME	
SHEET NO	
DRAWING NO	02-L-2

...\cadd\TRANS-STATION\02-L-2.DGN 06/04/2003 10:43:55 AM

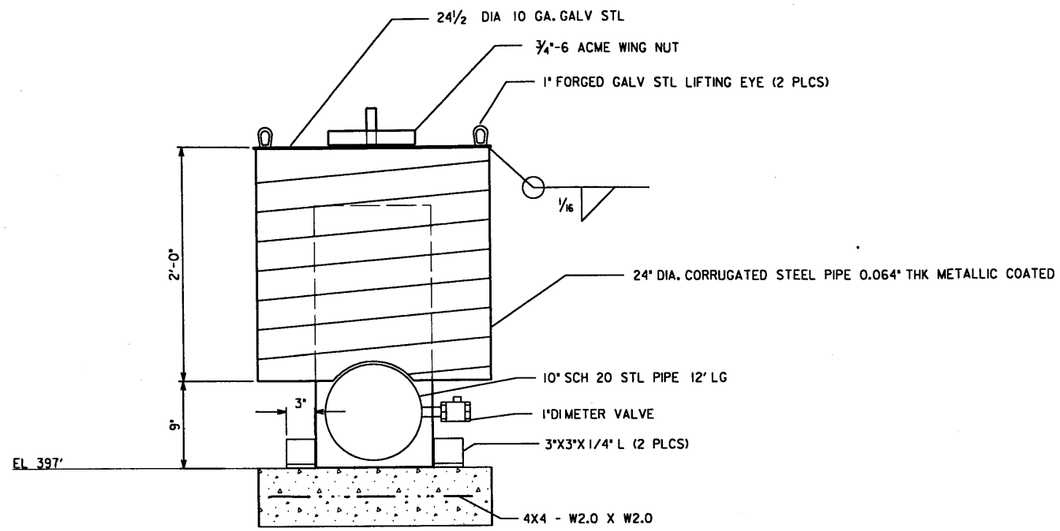

DETAIL 1 / L-2

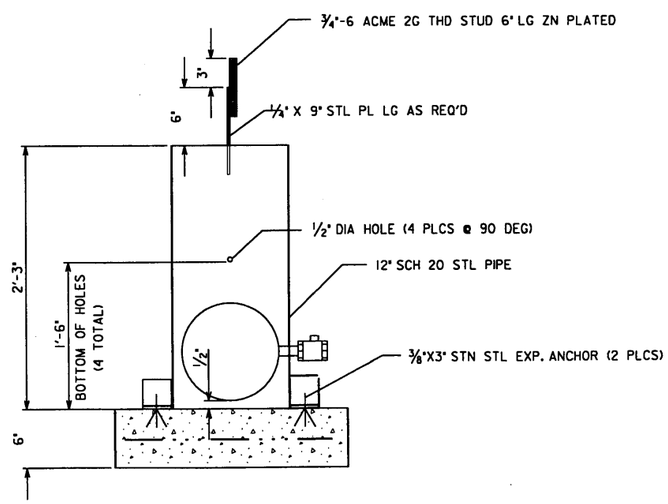

DETAIL 1 WITH 24" DIA. CORRUGATED PIPE NOT SHOWN

NOTES:

1. WELDING SHALL BE IN ACCORDANCE WITH AWS SPECIFICATIONS.
2. PAINT UNCOATED STEEL SURFACES WITH ONE COAT OF COAL TAR SOLUTION 12-16 MILS DFT.
3. TOUCH-UP WELD ZONE ON COATED STEEL SURFACES WITH ONE COAT INORGANIC ZINC-RICH PRIMER 2-3.5 MILS DFT.

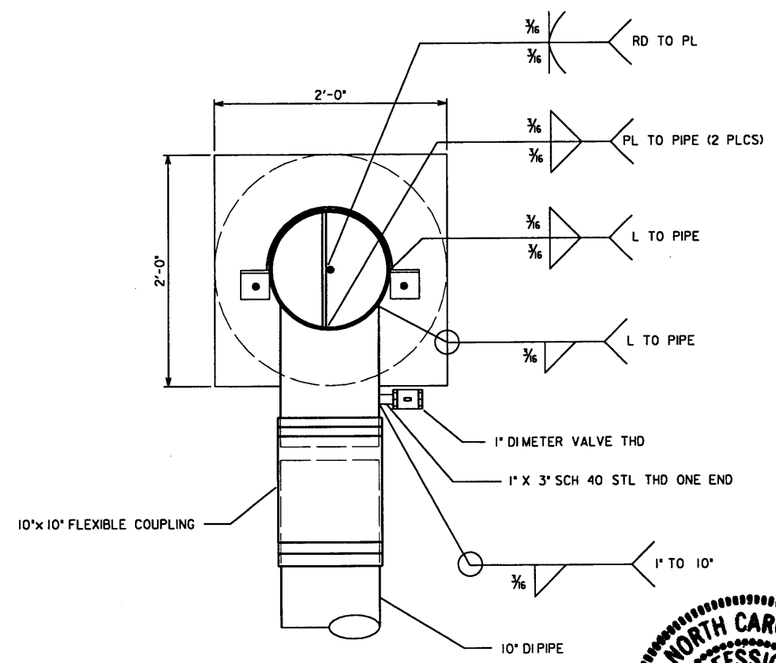

DETAIL 1 PLAN VIEW

NORTH CAROLINA PROFESSIONAL SEAL 14799 ENGINEER JOHN G. FUNK 6/4/03

AS-BUILT DRAWING
CONSTRUCTED IN SUBSTANTIAL
CONFORMANCE WITH CONTRACT DOCUMENTS

NO	REVISIONS	DRN	CHK	DATE
1	FOR BID			7/08/02
0	CONSTRUCTION DESIGN PHASE REVIEW			3/29/02
	AS BUILT	JGF	JGF	6/4/03

DRN
DES
CHK
APP

Copyright © 2001 EARTH TECH all rights reserved.

EARTH TECH
A tyco INTERNATIONAL LTD. COMPANY
701 Corporate Center Drive, Suite 475
Raleigh, NC 27607
(919) 854-6200 Fax (919) 854-6259

NORTH CAROLINA STATE UNIVERSITY
TRANSFER STATION
STORM WATER PROJECT

POCKET WETLAND DETAILS

DATE	JUNE, 2001
PROJECT NO	35507
FILENAME	
SHEET NO	
DRAWING NO	02-L-3

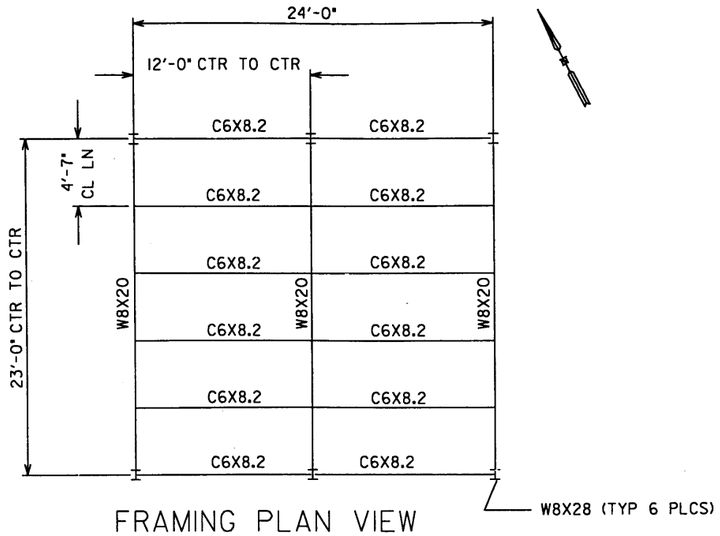

FRAMING PLAN VIEW

0 10 20

SCALE

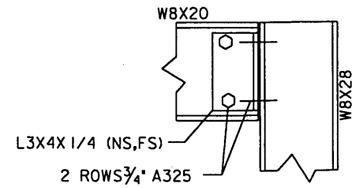

FRAMED BEAM CONNECTION

NOT TO SCALE

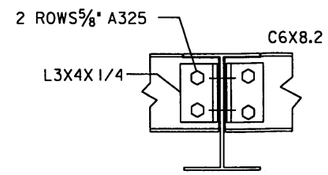

PURLIN CONNECTION

NOT TO SCALE

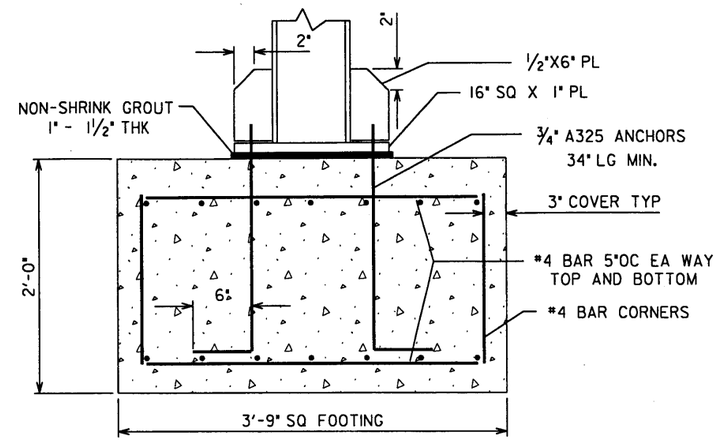

COLUMN-FOOTING CONNECTION

NOT TO SCALE

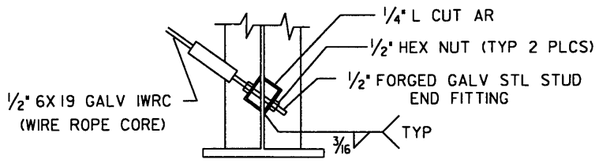

BRACING CONNECTION

NOT TO SCALE

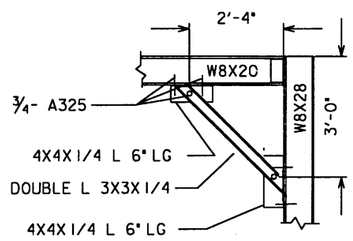

KNEE BRACE

NOT TO SCALE

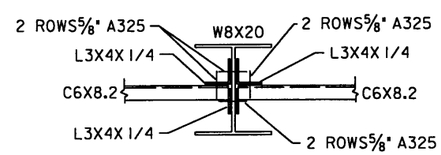

PURLIN - COLUMN

NOT TO SCALE

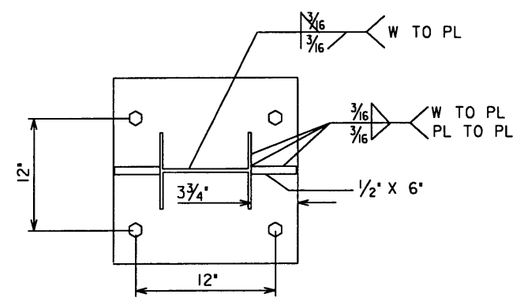

COLUMN BASE PLATE CONNECTION

NOT TO SCALE

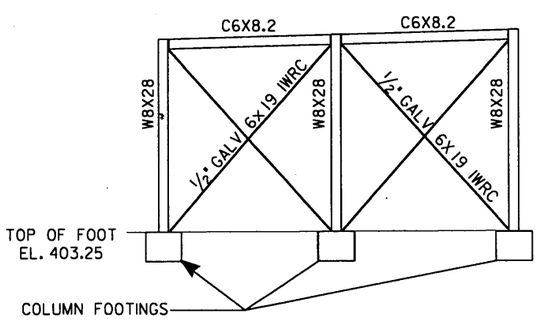

SOUTH ELEVATION

NOTE: CONTRACTOR SHALL VERIFY ELEVATIONS

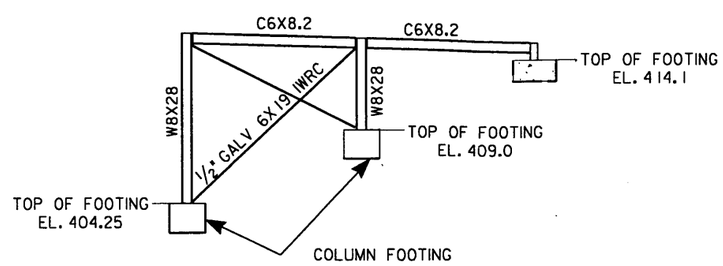

NORTH ELEVATION

NOTE: CONTRACTOR SHALL VERIFY ELEVATIONS

0 10 20

SCALE

NOTES

1. CONTRACTOR SHALL VERIFY ALL DIMENSION AND BE RESPONSIBE FOR DETAILING AND FIT-UP OF ALL STRUCTURAL STEEL
2. CONTRACTOR SHALL SUBMIT STRUCTURAL STEEL SHOP DRAWING FOR REVIEW
3. ALL BOLTED CONNECTION SHALL BE IN ACCORDANCE WITH AISC SPECIFICATIONS.
4. ALL WELDING SHALL BE IN ACCORDANCE WITH AWS & AISC SPECIFICATIONS.
5. STRUCTURAL STEEL SHALL BE SHOP PRIME PAINTED. FINISH PAINT SHALL BE ACRYLIC LATEX SEMI GLOSS 3.0 MILS DFT
6. SCREW FASTENERS SHALL BE HEAVY DUTY, SELF-DRILLING HEX HEAD WITH BONDED EPDM WASHER, #12 MIN.
7. SCREW FASTENER SPACING RIBBED STEEL SHEET TO STRUCTURAL STEEL6" OC MIN.

NORTH CAROLINA PROFESSIONAL SEAL 14799 ENGINEER JOHN G. FUNK 8/4/03

AS-BUILT DRAWING
CONSTRUCTED IN SUBSTANTIAL
CONFORMANCE WITH CONTRACT DOCUMENTS

NO	REVISIONS	DATE	DRN	CHK
3	FOR BID	1/08/02		
2	CONSTRUCTION DOCUMENT PHASE REVIEW	3/25/02		
1	DESIGN DOCUMENT PHASE REVIEW	11/02/01		
0	FOR NC STATE UNIVERSITY REVIEW	07/16/01	JGF	JGF 6/4/03

AS-BUILT

DRN
DES
CHK
APP

Copyright © 2001 EARTH TECH all rights reserved.

EARTH TECH
A tyco INTERNATIONAL LTD. COMPANY
701 Corporate Center Drive, Suite 475
Raleigh, NC 27607
(919) 854-6200 Fax (919) 854-6259

NORTH CAROLINA STATE UNIVERSITY
TRANSFER STATION IMPROVEMENTS PROJECT

CANOPY STRUCTURAL STEEL AND FOOTING

DATE NOVEMBER, 2001
PROJECT NO 35507
FILENAME
SHEET NO
DRAWING NO 02-S-1

...\cadd\TRANS-STATION\steel.dgn 06/04/2003 10:32:22 AM