RED ROCK DISPOSAL, LLC
WAKE COUNTY, NORTH CAROLINA

CONSTRUCTION & DEMOLITION DEBRIS (C&D) LANDFILL
PHASE 1
ENGINEERING DRAWINGS

MAY 2001
REVISED OCTOBER 2003 (SEE NOTE 1)
△3 REVISED APRIL 2004

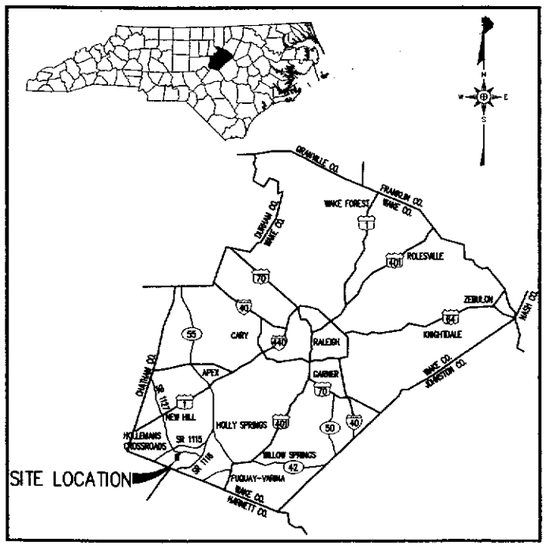

VICINITY MAP
N.T.S.

SHEET NO.	DRAWING NO.	DRAWING TITLE
△3 1	1	TITLE/COVER SHEET
2	E1	EXISTING SITE CONDITIONS (NOT INCLUDED IN REVISED DRAWING SET)
△3 3	E2	FACILITY PLAN – BASE GRADES
4	E3	FACILITY PLAN – FINAL COVER GRADES
5	E4	PHASE 1 – SUBGRADE (NOT INCLUDED IN REVISED DRAWING SET. REFER TO DRAWING EC8 FOR PHASE 1C SUBGRADE)
6	E5	PHASE 1 – FINAL GRADING AND DRAINAGE PLAN
7	G1	PHASE 1 – DETAILS (NO REVISIONS)
△3 8	X1	PHASE 1 – ENGINEERING CROSS SECTIONS (SHEET 1 OF 2)
△3 9	X2	PHASE 1 – ENGINEERING CROSS SECTIONS (SHEET 2 OF 2)
10	EC1	PHASE 1 – EROSION AND SEDIMENTATION CONTROL DETAILS (SHEET 1 OF 5)
11	EC2	PHASE 1 – EROSION AND SEDIMENTATION CONTROL DETAILS (SHEET 2 OF 5)
12	EC3	PHASE 1 – EROSION AND SEDIMENTATION CONTROL DETAILS (SHEET 3 OF 5) (NO REVISIONS)
13	EC4	PHASE 1 – EROSION AND SEDIMENTATION CONTROL DETAILS (SHEET 4 OF 5)
14	EC5	PHASE 1 – EROSION AND SEDIMENTATION CONTROL DETAILS (SHEET 5 OF 5)
15	EC6	PHASE 1C – INITIAL GRADING AND DRAINAGE PLAN
△3 16	EC7	PHASE 1C-1 SUBGRADE AND DRAINAGE PLAN
△3 17	EC8	PHASE 1C-2 SUBGRADE AND DRAINAGE PLAN
	P1	PHASE 1 – FILLING SEQUENCE (NOT INCLUDED IN REVISED DRAWING SET.)

NOTE

1. ONLY THOSE DRAWINGS PRESENTING CHANGES AS A RESULT OF RE-PHASING CELL 1C ARE INCLUDED IN THIS SET. ALL OTHER PREVIOUS PHASE 1 DRAWINGS REMAIN UNCHANGED OR ARE SUPERCEDED BY NEW DRAWINGS.

APPROVED
DIVISION OF WASTE MANAGEMENT
SOLID WASTE SECTION
DATE 6/4/04 BY DJB
RAL. CENT. FILE
PTC
MOD. #2
PHASE 1 (A, B, C REVISED)
92-28

Received
APR 2004
Solid Waste Section

G.N. RICHARDSON & ASSOCIATES, INC.
Engineering and Geological Services

NORTH CAROLINA PROFESSIONAL SEAL 021886

NORTH CAROLINA PROFESSIONAL SEAL 4/28/04

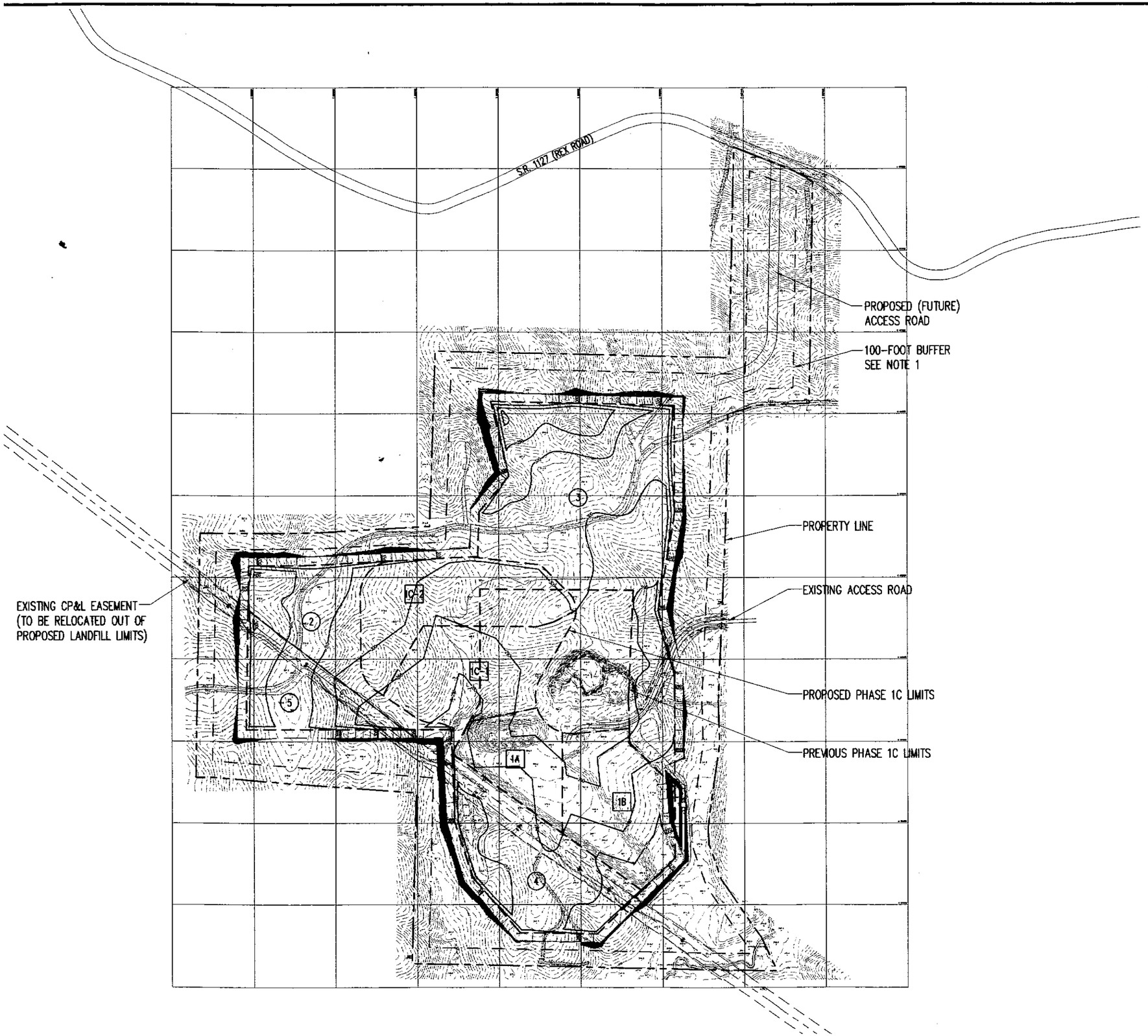

LEGEND

300	EXISTING 10' CONTOUR
	EXISTING 2' CONTOUR
	PROPERTY LINE (PER REFERENCE 2)
	PHASE BOUNDARY
3	PHASE IDENTIFICATION
1A	SUBPHASE AND SUB-SUBPHASE IDENTIFICATION

NOTES:

1. THIS BUFFER REPRESENTS A TYPE A BUFFER YARD AND A TRANSITIONAL BUFFER IN ACCORDANCE WITH WAKE COUNTY ZONING REQUIREMENTS. THIS 100-FOOT BUFFER ALSO INCLUDES, BUT DOES NOT SHOW, A 50-FOOT UNDISTURBED BUFFER ALSO PER WAKE COUNTY ZONING REQUIREMENTS.
2. ELEVATIONS REFERENCE U.S.G.S. VERTICAL DATUM (MSL).
3. GRID COORDINATES REFERENCE NC STATE PLANE SYSTEM (NAD 1983).

REFERENCES:

1. OVERALL SITE TOPOGRAPHY PREPARED BY SPATIAL DATA CONSULTANTS, INC., BASED ON AERIAL PHOTOGRAPHY DATED FEBRUARY 8, 2003.
2. THE PROPERTY LINE SHOWN REFERENCES DRAWING TITLED, "BOUNDARY SURVEY FOR WASTE INDUSTRIES, INC.", PREPARED BY SURVEY SOLUTIONS, P.C. DATED 12/27/00, SCALE 1"=400'.
3. CP&L POWERLINE/EASEMENT REFERENCES THE BOUNDARY SURVEY.

NO.	DATE	REVISION
3	4/04	REVISED GRADING
2	10/03	PHASE 1C REVISIONS

G.N. RICHARDSON & ASSOCIATES, INC.
Engineering and Geological Services
14 N. BOYLAN AVENUE RALEIGH, N.C. 27603
PHONE-919-828-0577 FAX-919-828-3899 WWW.GNRA.COM

SEAL

PROJECT TITLE:
RED ROCK DISPOSAL, LLC
CONSTRUCTION/DEMOLITION
LANDFILL PHASE 1
WAKE COUNTY,NC

DRAWING TITLE:
FACILITY PLAN
BASE GRADES

DESIGNED BY: T.B.M.	DRAWN BY: C.T.J.
CHECKED BY: J.M.C.	PROJECT NO.: RED ROCK-2

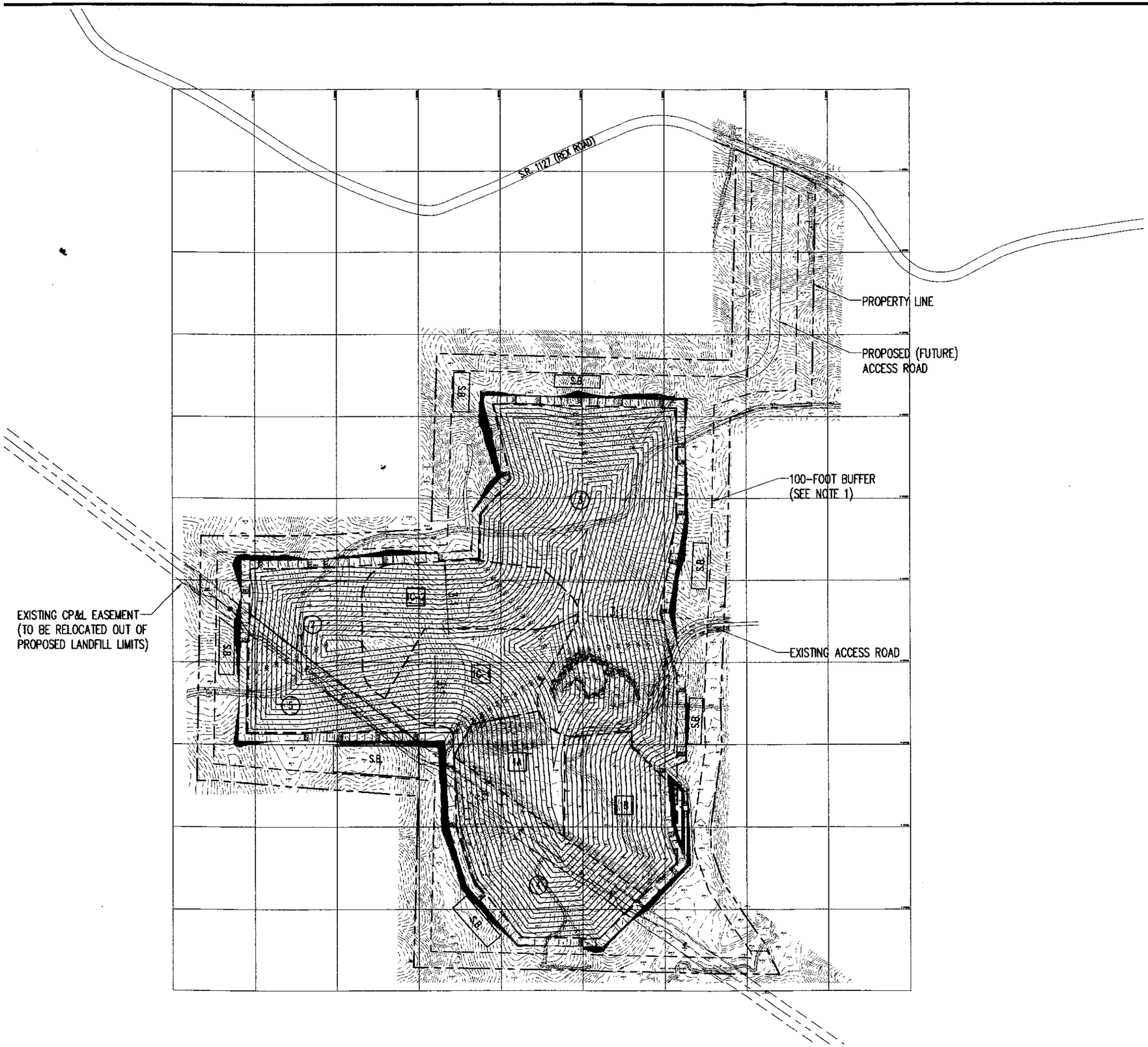

LEGEND

300	EXISTING 25' CONTOUR
	EXISTING 5' CONTOUR
	PROPERTY LINE (PER REFERENCE 2)
	PHASE BOUNDARY
S.B.	CONCEPTUAL SEDIMENT BASIN LOCATION (FINAL LOCATION TO BE DETERMINED)
3	PHASE IDENTIFICATION
1A	SUBPHASE AND SUB-SUBPHASE IDENTIFICATION

NOTES:

1. THIS BUFFER REPRESENTS A TYPE A BUFFER YARD AND A TRANSITIONAL BUFFER IN ACCORDANCE WITH WAKE COUNTY ZONING REQUIREMENTS. THIS 100-FOOT BUFFER ALSO INCLUDES, BUT DOES NOT SHOW, A 50-FOOT UNDISTURBED BUFFER ALSO PER WAKE COUNTY ZONING REQUIREMENTS.
2. ELEVATIONS REFERENCE U.S.G.S. VERTICAL DATUM (MSL).
3. GRID COORDINATES REFERENCE NC STATE PLANE SYSTEM (NAD 1983).

REFERENCES:

1. OVERALL SITE TOPOGRAPHY PREPARED BY SPATIAL DATA CONSULTANTS, INC., BASED ON AERIAL PHOTOGRAPHY DATED FEBRUARY 8, 2003.
2. THE PROPERTY LINE SHOWN REFERENCES DRAWING TITLED, "BOUNDARY SURVEY FOR WASTE INDUSTRIES, INC.", PREPARED BY SURVEY SOLUTIONS, P.C. DATED 12/27/00, SCALE 1"=400'.
3. CP&L POWERLINE/EASEMENT REFERENCES THE BOUNDARY SURVEY.

NO.	DATE	REVISION
2	10/03	PHASE 1C REVISIONS

G.N. RICHARDSON & ASSOCIATES, INC.
Engineering and Geological Services
14 N. BOYLAN AVENUE RALEIGH, N.C. 27603
PHONE-919-828-0677 FAX-919-828-3899 WWW.GNRA.COM

SEAL

PROJECT TITLE: RED ROCK DISPOSAL, LLC
CONSTRUCTION/DEMOLITION LANDFILL PHASE 1
WAKE COUNTY, NC

DRAWING TITLE: FACILITY PLAN
FINAL COVER GRADES

DESIGNED BY: T.B.M.	DRAWN BY: C.T.J.
CHECKED BY: J.M.G.	PROJECT NO.: RED ROCK-2

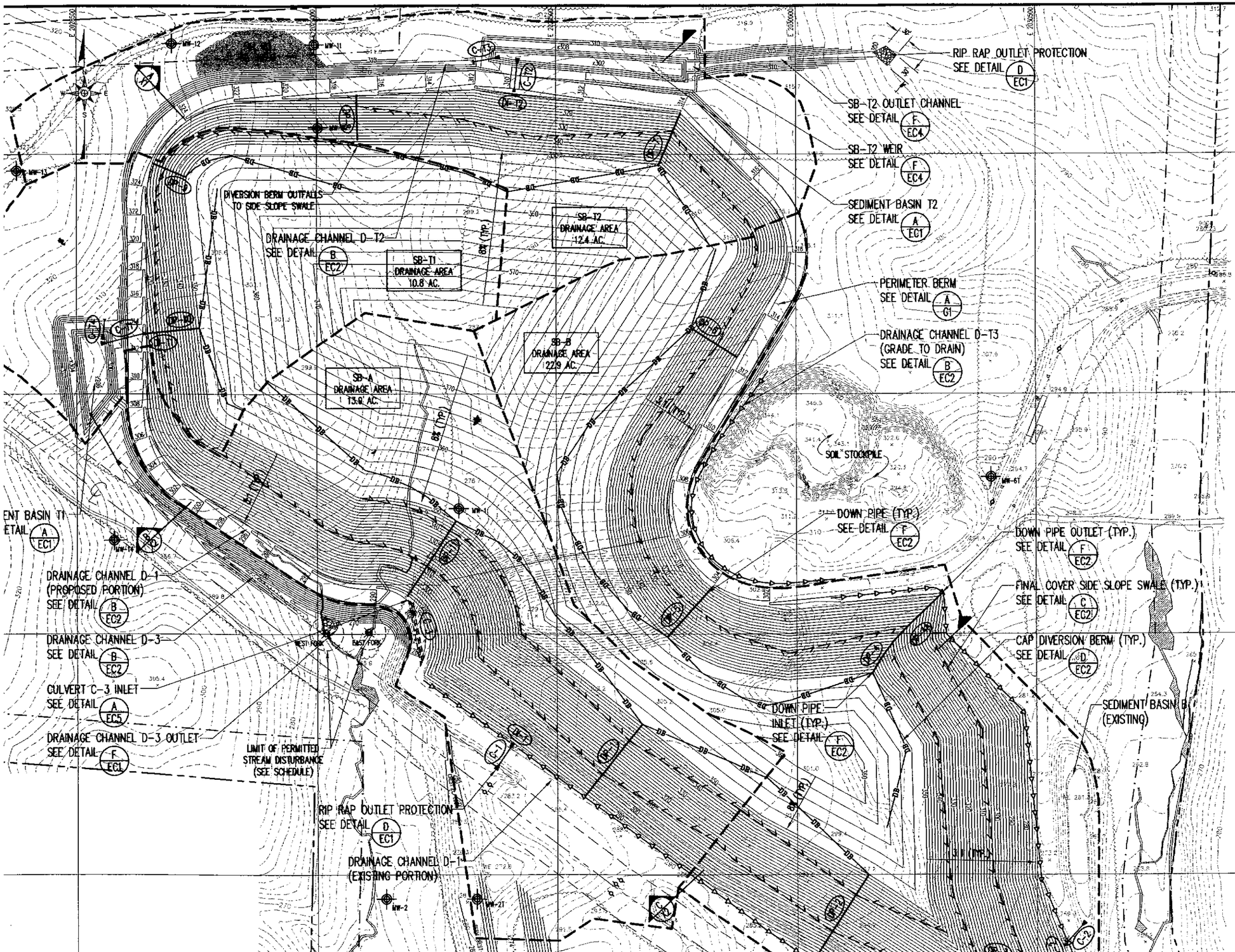

CULVERT SCHEDULE							
NO.	NO. OF PIPES	SIZE/TYPE	LENGTH	SLOPE	INV. IN	INV. OUT	REMARKS
[illegible]	1	30" RCP (CLASS III) WITH FES (OUTLET)	55'	2.0%	277.1'	276.0'	EXISTING CULVERT
[illegible]	1	30" RCP (CLASS III) WITH FES (OUTLET)	85'	8.4%	257.1'	250.0'	EXISTING CULVERT
[illegible]	[illegible]	18" RCP (CLASS III) WITH RIP RAP RIPRAP SIDES	[illegible]	[illegible]	[illegible]	[illegible]	[illegible]

SCHEDULE OF LIMITS OF PERMITTED STREAM DISTURBANCE		
LOCATION	NORTHING	EASTING
WEST FORK	674502.30	2029018.22
EAST FORK	674504.17	2029107.27

NOTE: NO EARTH DISTURBANCE OR SEDIMENT DEPOSITION PERMITTED DOWN STREAM OF THESE POINTS.

DOWN PIPE SCHEDULE	
NO.	SIZE
1	18"
2	18"
2A	18"
3	18"
4	18"
4A	18"
5	18"
6	18"
7	18"
8	18"
9	18"
10	18"
11	18"

LEGEND

- 500 — EXISTING 10' CONTOUR
- EXISTING 2' CONTOUR
- 250 — PROPOSED CONTOUR (SEE NOTE 4)
- PROPERTY LINE (SEE REFERENCE 2)
- 100' BUFFER (SEE NOTE 1)
- DELINEATED WETLAND AREAS (SEE REFERENCE 4)
- DELINEATED CHANNEL (SEE REFERENCE 4)
- DRAINAGE AREA BOUNDARY
- SIDE SLOPE SWALE
- DRAINAGE CHANNEL
- DB — CAP DIVERSION BERM
- DP-1 — DOWN PIPE
- C-T1 — DROP INLET/CULVERT
- MW-1 — MONITORING WELL (SEE NOTE 7)
- PZ-2 — PIEZOMETER

NOTES:

1. THIS BUFFER REPRESENTS A TYPE A BUFFER YARD AND A TRANSITIONAL BUFFER IN ACCORDANCE WITH WAKE COUNTY ZONING REQUIREMENTS. THIS 100-FOOT BUFFER ALSO INCLUDES, BUT DOES NOT SHOW, A 50-FOOT UNDISTURBED BUFFER ALSO PER WAKE COUNTY ZONING REQUIREMENTS.
2. ELEVATIONS REFERENCE U.S.G.S. VERTICAL DATUM (MSL).
3. GRID COORDINATES REFERENCE NC STATE PLANE SYSTEM (NAD 1983).
4. CONTOURS ON THE LANDFILL REPRESENT THE TOP OF FINAL COVER SURFACE. IN THE EVENT OF FUTURE NCDENR APPROVAL OF ADDITIONAL PHASES, THIS SURFACE REPRESENTS TOP OF INTERMEDIATE COVER SOIL.
5. CPAL APROVAL WILL BE RECEIVED PRIOR TO PLACEMENT OF ANY SOIL OR WASTE MATERIAL WITHIN THE 100' UTILITY EASEMENT.
6. EXISTING SEDIMENT TRAP NO. 1 IS LOCATED OUTSIDE OF THE SOUTHEAST CORNER OF PHASE 1. REFER TO MAY 2001 PHASE 1 PERMIT TO CONSTRUCT DRAWINGS.
7. MONITORING WELLS MW-1 AND MW-9 TO BE ABANDONED.
8. REFER TO DRAWINGS EC-5, EC-6, AND EC-7 FOR SEQUENTIAL GRADING AND DRAINAGE WITHIN PHASE 1C.

REFERENCES:

1. OVERALL SITE TOPOGRAPHY PREPARED BY SPATIAL DATA CONSULTANTS, INC., BASED ON AERIAL PHOTOGRAPHY DATED FEBRUARY 8, 2003.
2. THE PROPERTY LINE SHOWN REFERENCES DRAWING TITLED, "BOUNDARY SURVEY FOR WASTE INDUSTRIES, INC.", PREPARED BY SURVEY SOLUTIONS, P.C. DATED 12/27/00, SCALE 1"=400'.
3. CPAL POWERLINE/EASEMENT REFERENCES THE BOUNDARY SURVEY.
4. DELINEATION PERFORMED BY SOIL & ENVIRONMENTAL CONSULTANTS; SURVEYED BY SURVEYING SOLUTIONS, P.C., DATED APRIL 2001 AND APPROVED BY THE US ARMY CORPS OF ENGINEERS MAY 10, 2001.

NO.	DATE	REVISION
2	10/03	REVISED PHASE 1C
1	10/31/01	RELOCATED BASIN B AND REVISED PERIMETER BERM

G.N. RICHARDSON & ASSOCIATES, INC.
Engineering and Geological Services
14 N. BOYLAN AVENUE RALEIGH, N.C. 27603
PHONE-919-828-0577 FAX-919-828-3899 WWW.GNRA.COM

SEAL

PROJECT TITLE: RED ROCK DISPOSAL, LLC CONSTRUCTION & DEMOLITION LANDFILL PHASE 1 WAKE COUNTY, NC

DRAWING TITLE: PHASE 1 FINAL GRADING AND DRAINAGE PLAN

DESIGNED BY: T.B.M.	DRAWN BY: C.T.J.
CHECKED BY: J.M.G.	PROJECT NO.: RED ROCK-2

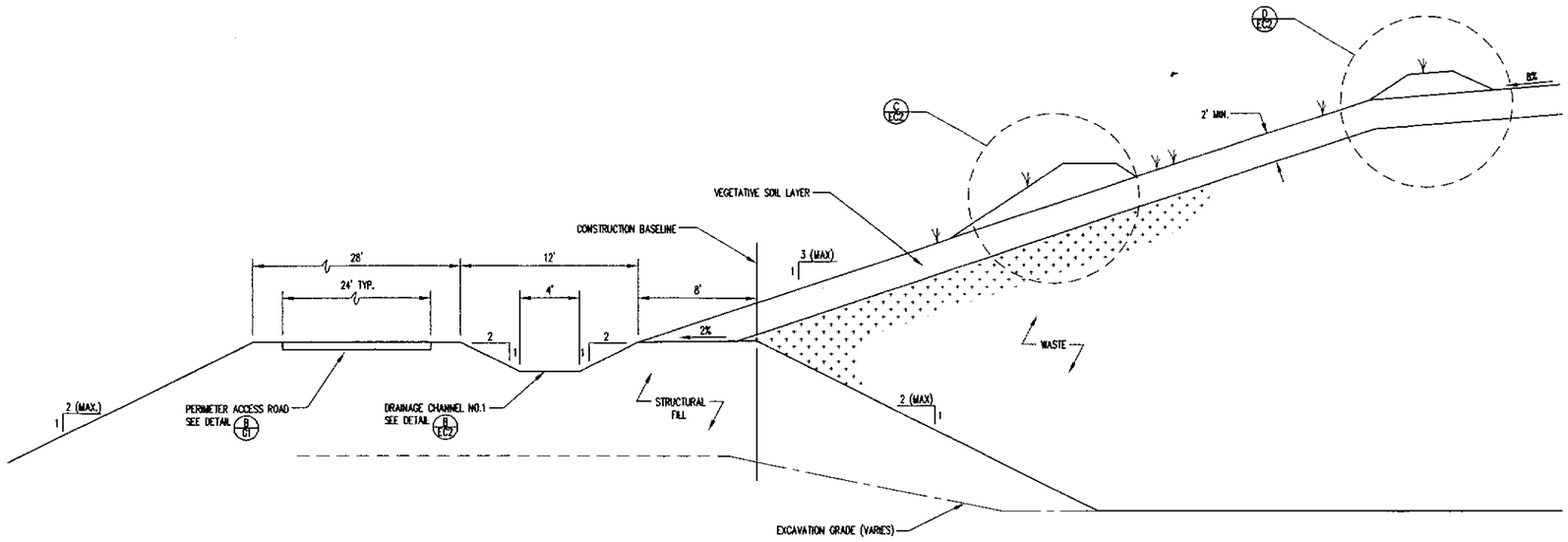

PERIMETER BERM CROSS SECTION (TYP.)

DETAIL A/G1
SCALE: 1"= 5'

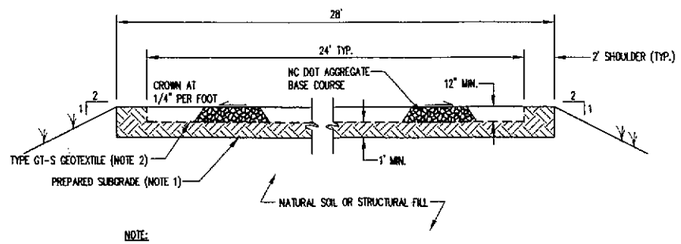

NOTE:

1. IN FILL AREAS, PREPARED SUBGRADE IS EQUIVALENT TO STRUCTURAL FILL. FOR CUT AREAS, REMOVE AND REPLACE WITH STRUCTURAL FILL (SEE PROJECT SPECIFICATIONS).
2. DEPENDING ON SUBGRADE CONDITIONS, THE ENGINEER MAY ALLOW INSTALLATION WITHOUT A GEOTEXTILE.

TYPICAL ROADWAY CROSS SECTION

DETAIL B/G1
SCALE: 1"= 5'

NO.	DATE	REVISION

G.N. RICHARDSON & ASSOCIATES, INC.
Engineering and Geological Services
425 N. BOYLAN AVENUE RALEIGH, N.C. 27603
PHONE-919-828-0577 FAX-919-828-3899 WWW.GNRA.COM

SEAL

SEAL

PROJECT TITLE:
RED ROCK DISPOSAL, LLC
CONSTRUCTION/DEMOLITION
LANDFILL PHASE 1
WAKE COUNTY, NC

DRAWING TITLE:
PHASE 1 – DETAILS

DESIGNED BY: P.K.S.	DRAWN BY: C.T.J.
CHECKED BY: J.M.G.	PROJECT NO.: CURTIS-3
SCALE:	DATE:

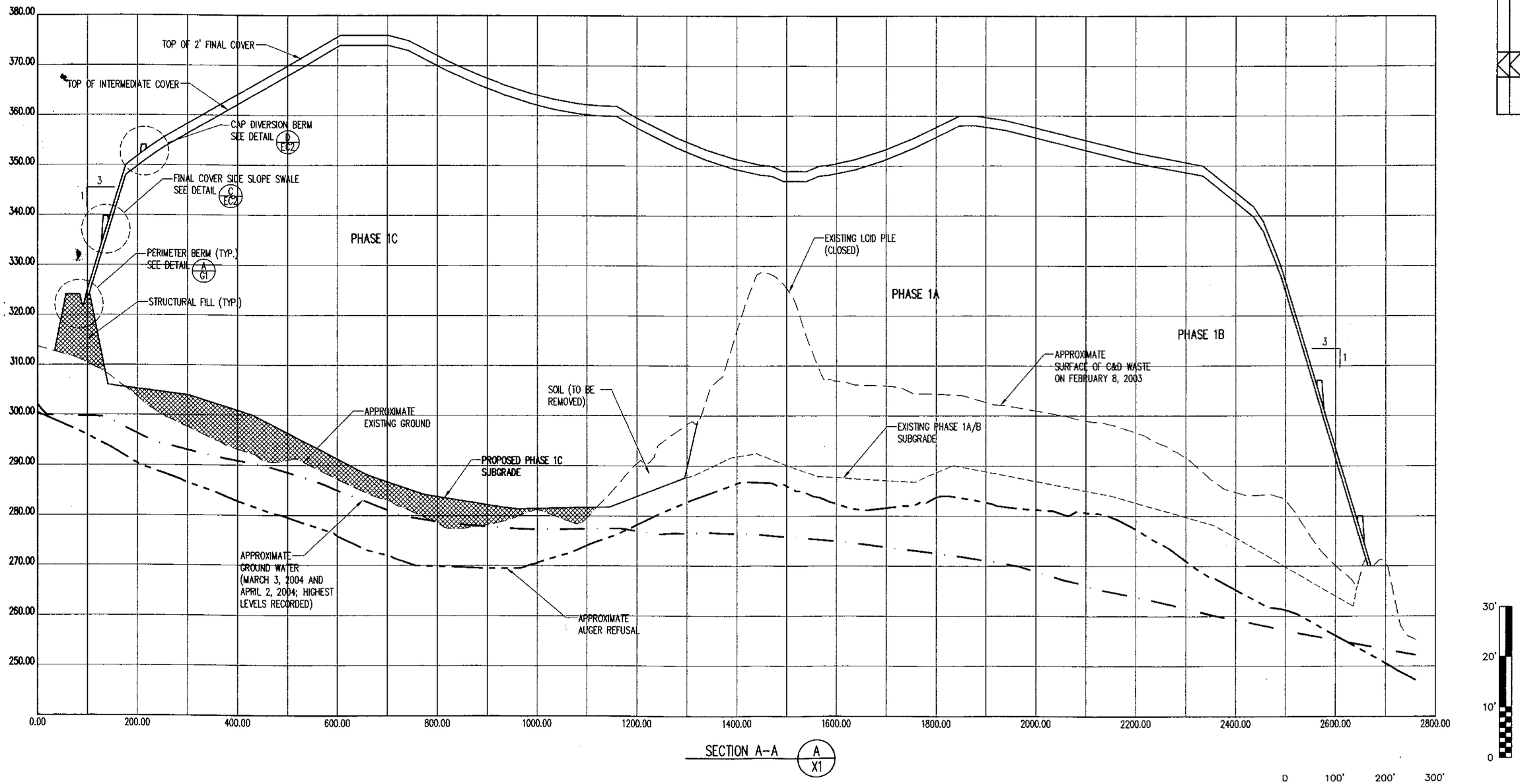

SECTION A-A (A / X1)

30' 20' 10' 0

0 100' 200' 300'

LEGEND

EXISTING GROUND (SEE REFERENCE 1)

PROPOSED GRADE

REFERENCES:

NO	DATE	REVISION
3	4/04	GRADING REVISIONS; REVISED GROUND WATER LEVELS
2	10/03	PHASE 1C REVISIONS

G.N. RICHARDSON & ASSOCIATES, INC.
Engineering and Geological Services
14 N. BOYLAN AVENUE RALEIGH, N.C. 27603
PHONE-919-828-0677 FAX-919-828-3899 WWW.GNRA.COM

SEAL

PROJECT TITLE: RED ROCK DISPOSAL, LLC
CONSTRUCTION/DEMOLITION
LANDFILL PHASE 1
WAKE COUNTY, NC

DRAWING TITLE: PHASE 1
ENGINEERING CROSS SECTIONS
(SHEET 1 OF 2)

DESIGNED BY: T.B.M.	DRAWN BY: C.T.J.
CHECKED BY: J.M.G.	PROJECT NO.: RED ROCK-2
SCALE:	DATE:

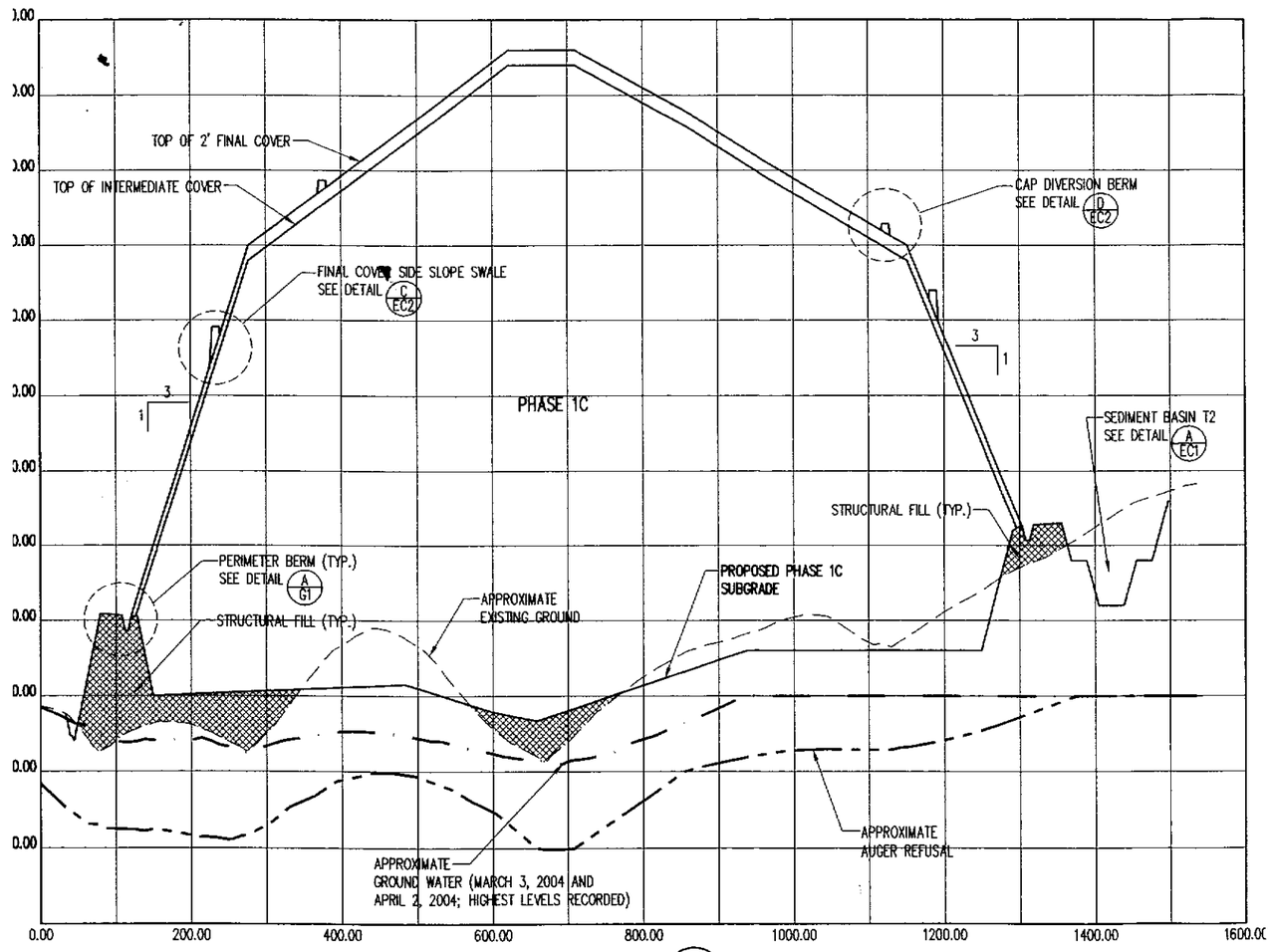

SECTION B–B (B / X2)

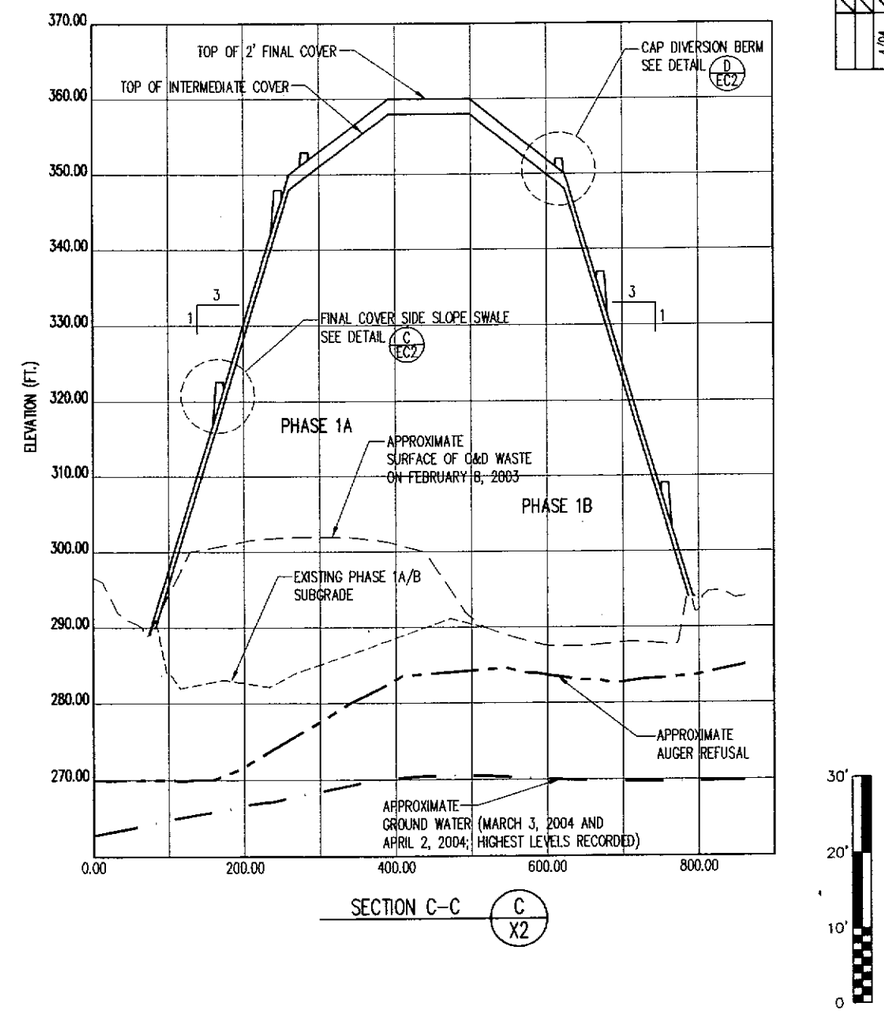

SECTION C–C (C / X2)

LEGEND

EXISTING GROUND (SEE REFERENCE 1)

REFERENCES:

NO.	DATE	REVISION
3	4/04	GRADING REVISIONS; REVISED GROUND WATER LEVELS
2	10/03	PHASE 1C REVISIONS

G.N. RICHARDSON & ASSOCIATES, INC.
Engineering and Geological Services
14 N. BOYLAN AVENUE RALEIGH, N.C. 27603
PHONE-919-828-0577 FAX-919-828-3899 WWW.GNRA.COM

SEAL

PROJECT TITLE: RED ROCK DISPOSAL, LLC
CONSTRUCTION/DEMOLITION
LANDFILL PHASE 1
WAKE COUNTY, NC

DRAWING TITLE: PHASE 1
ENGINEERING CROSS SECTIONS
(SHEET 2 OF 2)

DESIGNED BY:	DRAWN BY:
T.B.M.	C.T.J.
CHECKED BY:	PROJECT NO.:
J.M.C.	RED ROCK-2

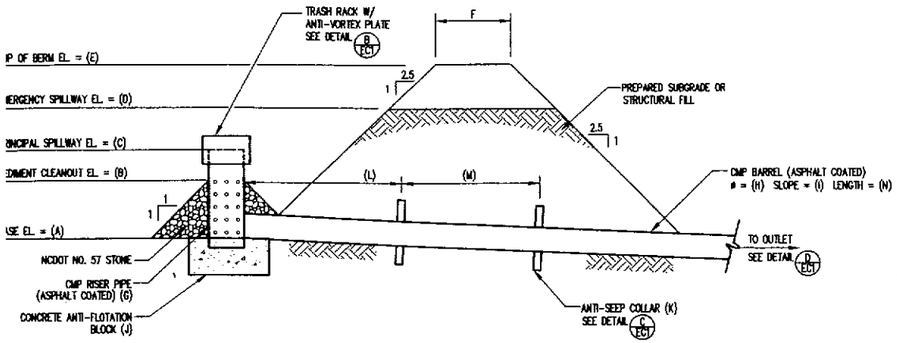

BASIN #	A	B	C	D	E	F	G	H	I	J	X	L	M	N
A (ENLARGED)	–	–	–	–	280.5'	–	–	–	–	–	–	–	–	–
B	259.0'	261.2'	263.0'	265.7'	267.7'	10'	36"	18"	0.5%	4.0'x4.0'x2.0' THICK	4.25'x4.25'	10'	25'	85'
T#	286.0'	287.6'	289.0'	290.0'	292.0'	10'	36"	18"	0.5%	3.25'x3.25'x2.0' THICK	3.25'x3.25'	10'	15'	160'
T1	296.0'	297.6'	300.0'	302.0'	304.0'	15'	36"	18"	2.0%	4.25'x4.25'x2.0' THICK	3.75'x3.75'	10'	10'	100'
T2	302.0'	304.3'	–	306.0'	380.0'	15'	36"	18"	–	–	–	–	–	–

NOTE:
1. CMP RISER IS PERFORATED WITH 1/2" DIAMETER HOLES ON 4" CENTERS FROM BASE TO CLEANOUT ELEVATION.

2 TYPICAL SEDIMENT BASIN CROSS-SECTION

DETAIL A EC1
N.T.S.

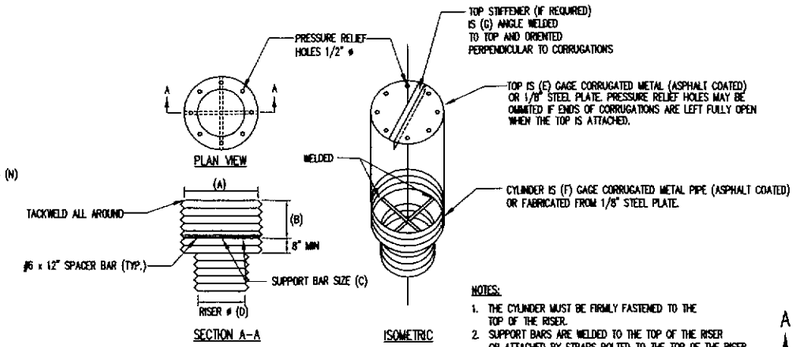

NOTES:
1. THE CYLINDER MUST BE FIRMLY FASTENED TO THE TOP OF THE RISER.
2. SUPPORT BARS ARE WELDED TO THE TOP OF THE RISER OR ATTACHED BY STRAPS BOLTED TO THE TOP OF THE RISER.

TRASH RACK SCHEDULE							
BASIN #	A	B	C	D	E	F	G
B	54"	17"	#8 REBAR	36"	14.0	14	NOT REQUIRED
T#	54"	17"	#8 REBAR	36"	14.0	14	NOT REQUIRED
T1	54"	17"	#8 REBAR	36"	14.0	14	NOT REQUIRED
T2	54"	17"	#8 REBAR	36"	14.0	14	NOT REQUIRED

TRASH RACK W/ ANTI-VORTEX PLATE

2 DETAIL B EC1
NOT TO SCALE

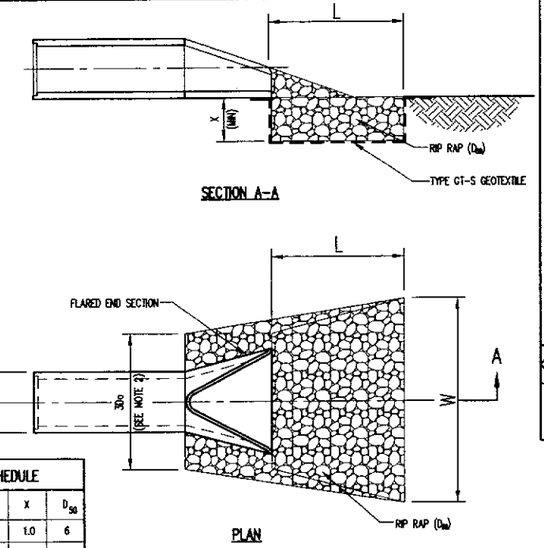

RIP RAP OUTLET PROTECTION SCHEDULE					
PIPE/OUTLET	D_0	L	W	X	D_{50}
C-1	30	16.0	19.0	1.0	6
C-2	30	19.0	22.0	1.5	9
C-3 (3x18")	–	10.0	22.0	1.0	6
SB-B	18	18.0	20.0	1.5	9
SB-T0	18	10.0	*	1.0	6
SB-T1	18	10.0	*	1.0	6
SB-T2	18	10.0	*	1.0	6
C-T1	30	14.0	17.0	1.0	6
C-T2	30	14.0	17.0	1.0	6
C-T3	18	10.0	12.0	1.0	6
C-T4	18	10.0	12.0	1.0	6
DP-1 TO DP-11	18	16.0	18.0	1.5	9
DP-2A	NO RIPRAP				
DP-4A	NO RIPRAP				

* RIP RAP WIDTH IS EQUAL TO CHANNEL WIDTH AT FLOW DEPTH OF 2 FEET.

RIP RAP OUTLET PROTECTION

2 DETAIL D EC1
N.T.S.

NOTE:
1. D_{50} REFERS TO THE MINIMUM REQUIRED AVERAGE STONE SIZE
2. FOR MORE THAN ONE PIPE, EXTEND RIP RAP 1.0' MIN. BEYOND OUTSIDE EDGES OF PIPES.

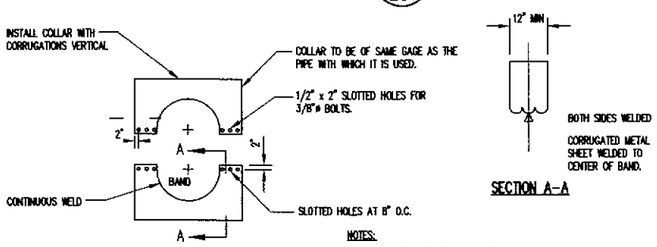

ELEVATION OF UNASSEMBLED COLLAR

NOTES:
1. ALL MATERIAL TO BE IN ACCORDANCE WITH PROJECT SPECIFICATIONS.
2. ALL COLLARS ARE TO BE ASPHALT COATED.
3. UNASSEMBLED COLLARS SHALL BE MARKED BY PAINTING OR TAGGING TO IDENTIFY MATCHING PAIRS.
4. THE LAP BETWEEN THE TWO HALF SECTIONS AND BETWEEN THE PIPE AND CONNECTING BAND SHALL BE CAULKED WITH ASPHALT MASTIC AT TIME OF INSTALLATION.
5. EACH COLLAR SHALL BE FURNISHED WITH TWO 1/2"ø RODS WITH STANDARD TANK LUGS FOR CONNECTING COLLARS TO PIPE

CORRUGATED METAL ANTI-SEEP COLLAR

DETAIL C EC1
N.T.S.

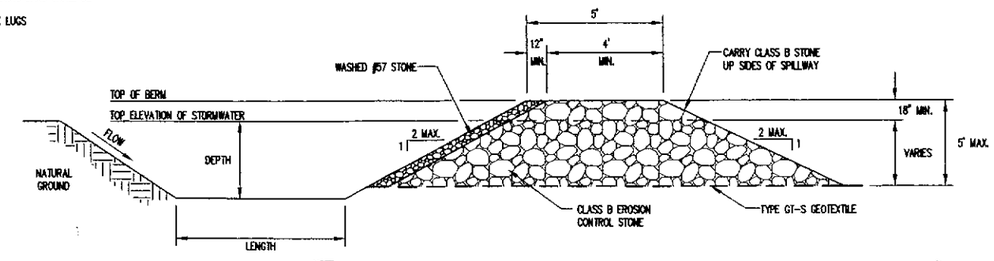

NOTE:
1. CLEAN TRAP WHEN SEDIMENT REACHES ONE-HALF OF THE DESIGN DEPTH.

SECTION THRU TRAP AND OUTLET

SEDIMENT TRAP SCHEDULE							
TRAP	WIDTH	LENGTH	DEPTH	WEIR LENGTH	BOT ELEV	TOP ELEV	WEIR ELEV
					(FT-MSL)		
1	18'	36'	3.5'	4'	EXISTING		
2	SEE PLAN	SEE PLAN	3.5'	10'	284.0	289.0	287.5
3	SEE PLAN	SEE PLAN	3.5'	10'	280.0	285.0	283.5

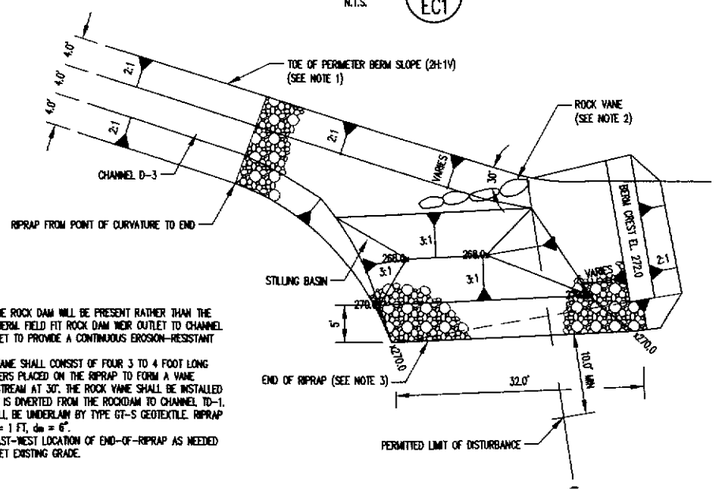

NOTES:
INITIALLY, THE ROCK DAM WILL BE PRESENT RATHER THAN THE PERIMETER BERM. FIELD FIT ROCK DAM WEIR OUTLET TO CHANNEL TD0-1 OUTLET TO PROVIDE A CONTINUOUS EROSION-RESISTANT FLOW PATH.
THE ROCK VANE SHALL CONSIST OF FOUR 3 TO 4 FOOT LONG FLAT BOULDERS PLACED ON THE RIPRAP TO FORM A VANE ANGLED UPSTREAM AT 30°. THE ROCK VANE SHALL BE INSTALLED AFTER FLOW IS DIVERTED FROM THE ROCKDAM TO CHANNEL TD-1.
RIPRAP SHALL BE UNDERLAIN BY TYPE GT-S GEOTEXTILE. RIPRAP THICKNESS = 1 FT, d_{50} = 6".
FIELD FIT EAST-WEST LOCATION OF END-OF-RIPRAP AS NEEDED TO BEST MEET EXISTING GRADE.

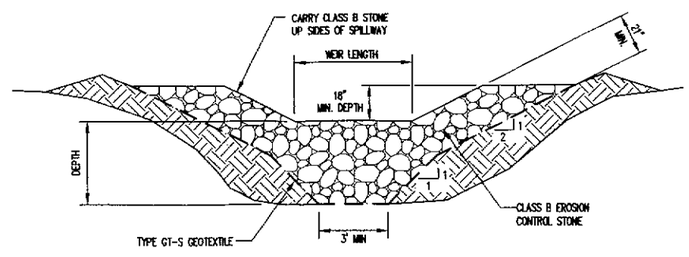

SECTION THRU BERM AND OUTLET

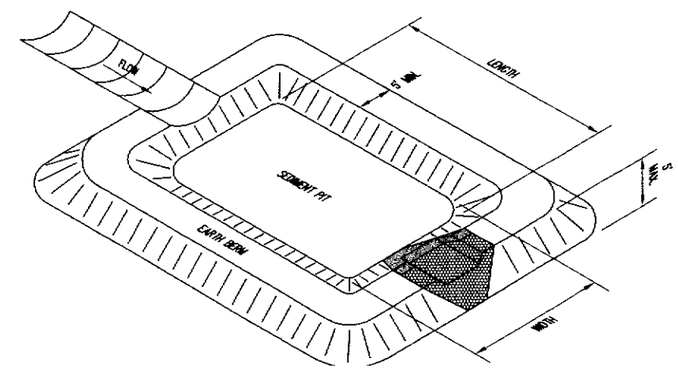

REVISION		
NO.	DATE	
2	10/03	PHASE 1C REVISIONS

G.N. RICHARDSON & ASSOCIATES, INC.
Engineering and Geological Services
14 N. BOYLAN AVENUE RALEIGH, N.C. 27603
PHONE-919-828-0577 FAX-919-828-3899 WWW.GNRA.COM

SEAL

PROJECT TITLE: RED ROCK DISPOSAL, LLC CONSTRUCTION/DEMOLITION LANDFILL PHASE 1 WAKE COUNTY, NC

DRAWING TITLE: PHASE 1 – EROSION & SEDIMENTATION CONTROL DETAILS (SHEET 1 OF 5)

DESIGNED BY: T.B.M.	DRAWN BY: C.T.J.
CHECKED BY: J.M.C.	PROJECT NO.: RED ROCK-2
SCALE:	DATE:

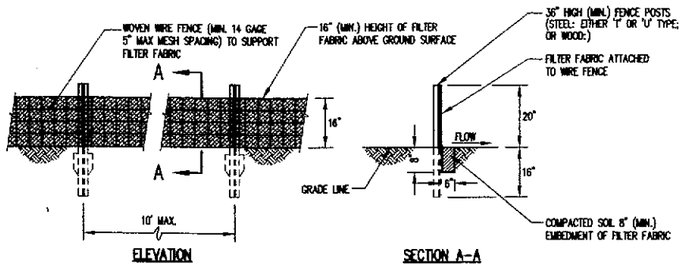

SILT FENCE

DETAIL A / EC2
N.T.S.

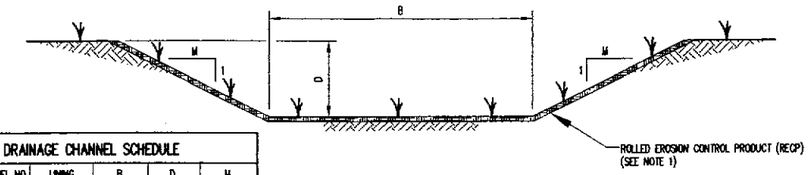

RECP LINED CHANNELS

NOTES:
1. FOR ANCHORAGE OF RECP, SEE DETAIL A / EC2
2. WHERE DEPTH OF CUT TO CHANNEL BOTTOM EXCEEDS 'D', INSTALL TRM TO HEIGHT 'D' ABOVE CHANNEL BOTTOM.

DRAINAGE CHANNEL DETAILS

DETAIL B / EC2
N.T.S.

2

DRAINAGE CHANNEL SCHEDULE				
DRAINAGE CHANNEL NO.	LINING	B	D	M
D-1	TRM*	4.0'	2.0'	2
D-2	TRM	0'	1.5'	2
D-3	TRM	4.0'	2.0'	2
D-T1	TRM	4.0'	2.0' MIN	2
D-T2	GRASS	3.0'	1.0' - 2.0'	2
D-T3	GRASS	0'	1.5'	2
SED. BASIN T1 OUTLET	TRM	4.0'	2.0'	2
SED. BASIN T2 OUTLET	TRM	4.0'	2.0'	2

*TRM = TURF REINFORCEMENT MATTING

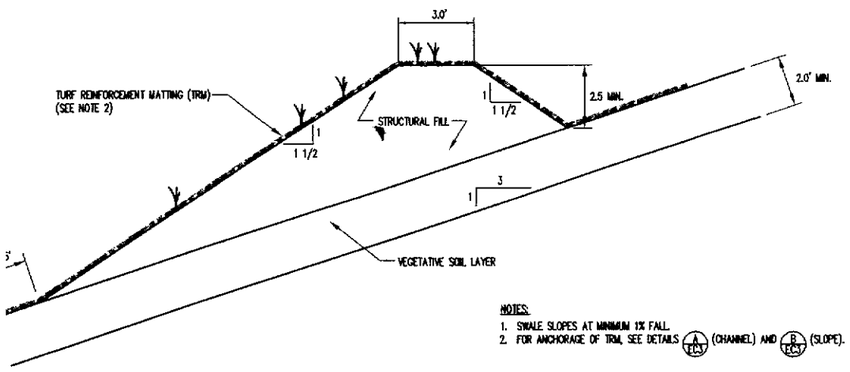

NOTES:
1. SWALE SLOPES AT MINIMUM 1% FALL.
2. FOR ANCHORAGE OF TRM, SEE DETAILS A / EC2 (CHANNEL) AND B / EC2 (SLOPE).

FINAL COVER - SIDE SLOPE SWALE

DETAIL C / EC2
SCALE 1"=5'-0"

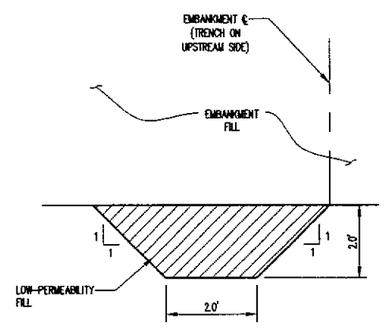

2

CUTOFF TRENCH

DETAIL G / EC2
N.T.S.

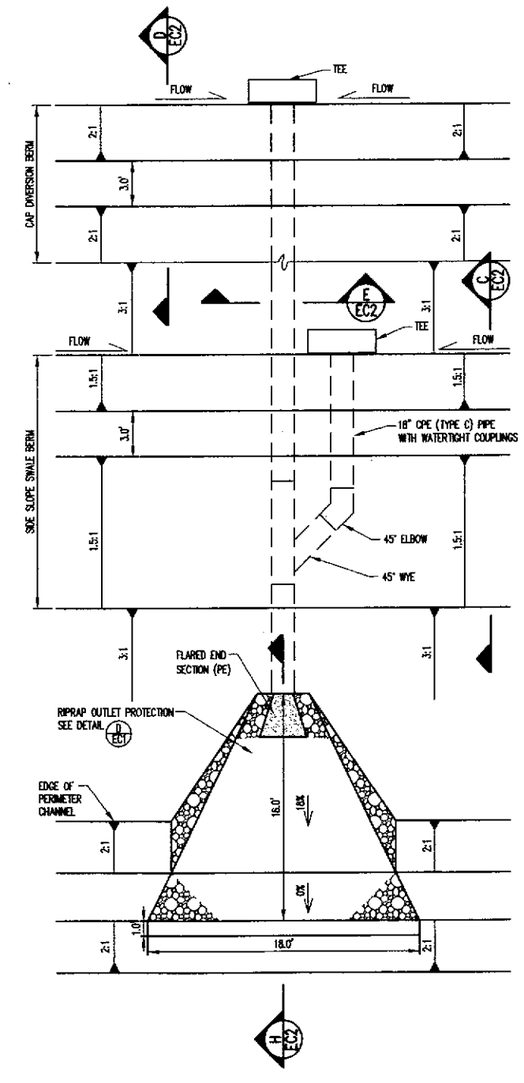

DOWN PIPE INLETS AND OUTLET

DETAIL F / EC2
SCALE 1"=5'

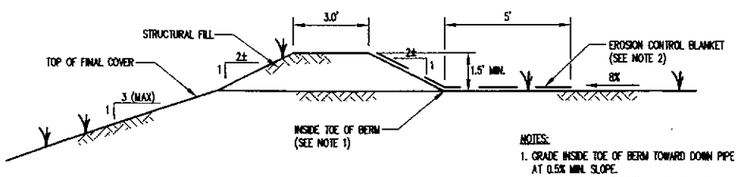

NOTES:
1. GRADE INSIDE TOE OF BERM TOWARD DOWN PIPE AT 0.5% MINI. SLOPE.
2. FOR ANCHORAGE OF EROSION CONTROL BLANKET, SEE DETAIL A / EC2.

CAP DIVERSION BERM

DETAIL D / EC2
SCALE 1"= 5'

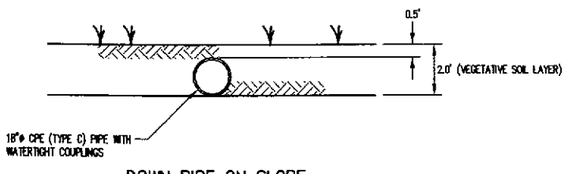

DOWN PIPE ON SLOPE

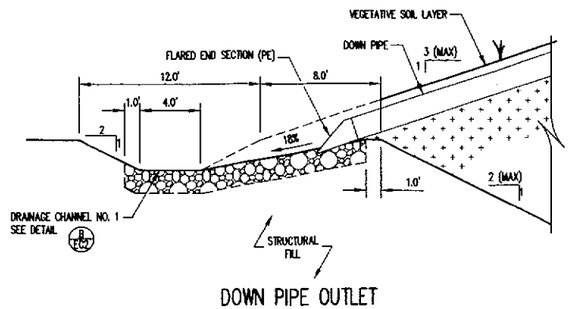

DOWN PIPE OUTLET

DETAIL H / EC2
N.T.S.

REVISION	DATE	NO.
PHASE 1C REVISIONS	10/03	1

G.N. RICHARDSON & ASSOCIATES, INC.
Engineering and Geological Services
14 N. BOYLAN AVENUE RALEIGH, N.C. 27603
PHONE-919-828-0577 FAX-919-828-3899 WWW.GNRA.COM

SEAL

SEAL

SEAL

PROJECT TITLE: RED ROCK DISPOSAL, LLC CONSTRUCTION/DEMOLITION LANDFILL PHASE 1 WAKE COUNTY, NC

DRAWING TITLE: PHASE 1 - EROSION & SEDIMENTATION CONTROL DETAILS (SHEET 2 OF 5)

DESIGNED BY: T.B.M.	DRAWN BY: C.T.J.
CHECKED BY: J.M.G.	PROJECT NO.: RED ROCK-2

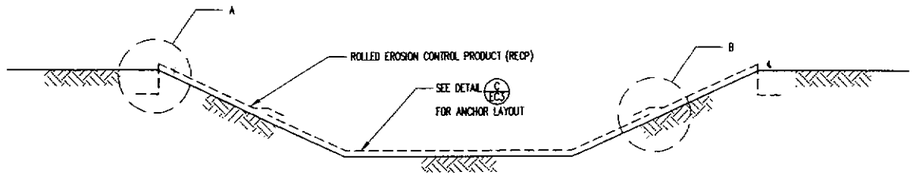

TYPICAL CHANNEL CROSS SECTION

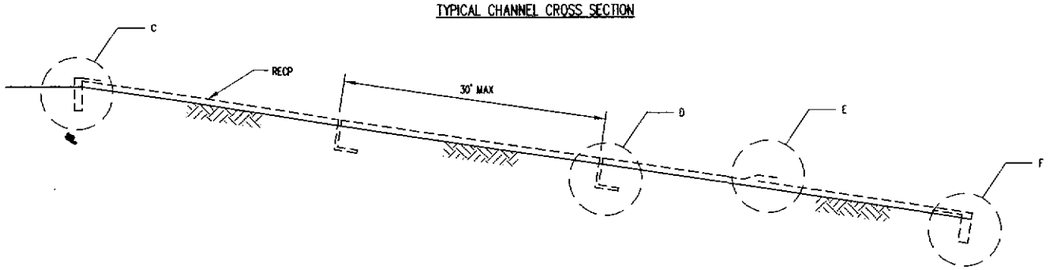

TYPICAL CHANNEL PROFILE

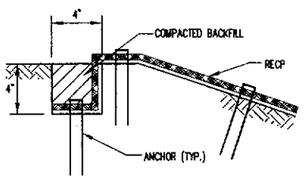

A. LONGITUDINAL ANCHOR TRENCH

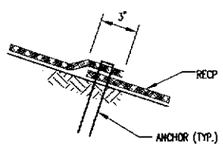

B. OVERLAP AT ADJACENT EDGES

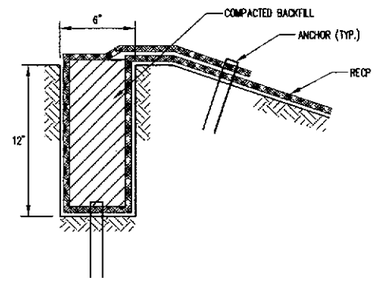

C. UPSTREAM TERMINAL ANCHOR TRENCH

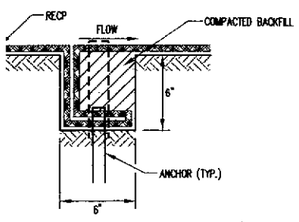

D. INTERMITTENT CHECK SLOT

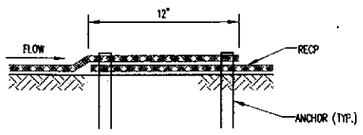

E. OVERLAP AT ROLL ENDS

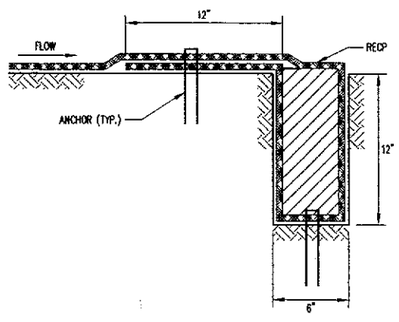

F. DOWNSTRAM TERMINAL ANCHOR TRENCH

NOTES:

1. PLACE ANCHORS AT ANCHOR TRENCHES, OVERLAPS, AND CHECK SLOTS ON 1 FOOT CENTERS. IF APPLICABLE, STAGGER ANCHOR SPACING BETWEEN MULTIPLE ROWS OF ANCHORS.

INSTALLATION OF ROLLED EROSION CONTROL PRODUCTS (CHANNELS)

DETAIL A EC3
N.T.S.

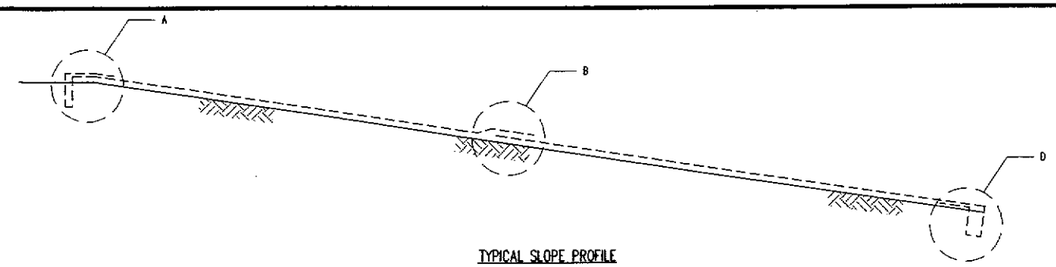

TYPICAL SLOPE PROFILE

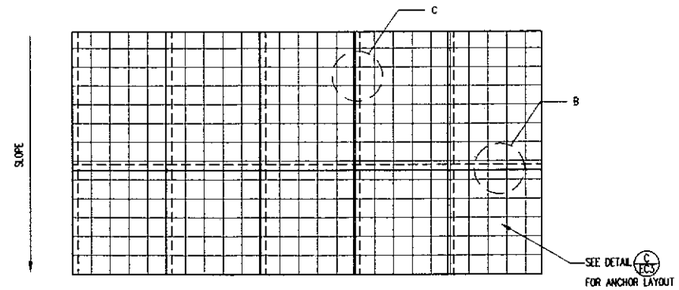

TYPICAL SLOPE PLAN VIEW

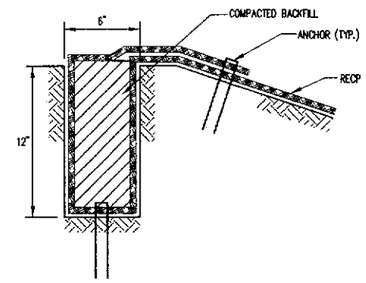

A. UPSLOPE TERMINAL ANCHOR TRENCH

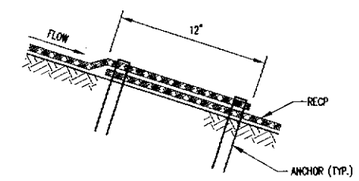

B. OVERLAP AT ROLL ENDS

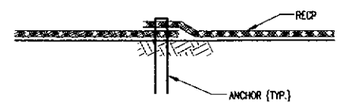

C. OVERLAP AT ADJACENT EDGES

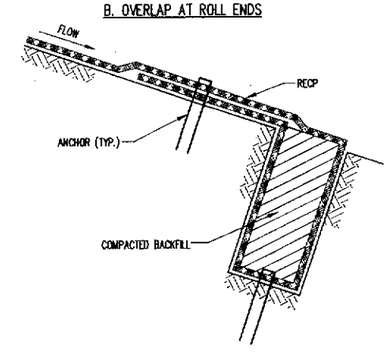

D. DOWNSLOPE TERMINAL ANCHOR TRENCH

NOTES:

1. PLACE ANCHORS AT ANCHOR TRENCHES, OVERLAPS, AND CHECK SLOTS ON 1 FOOT CENTERS. IF APPLICABLE, STAGGER ANCHOR SPACING BETWEEN MULTIPLE ROWS OF ANCHORS.

INSTALLATION OF ROLLED EROSION CONTROL PRODUCTS (SLOPES)

DETAIL B EC3
N.T.S.

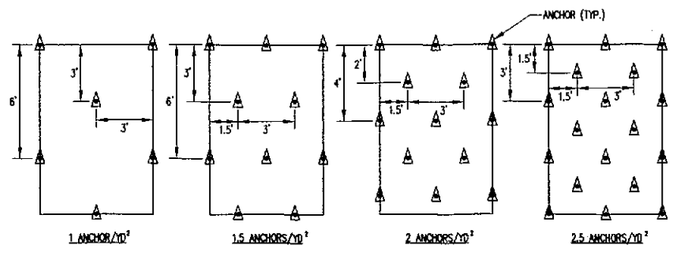

ANCHOR LAYOUT

ANCHOR SPACING SCHEDULE	
LOCATION	REQUIRED ANCHOR SPACING (ANCHORS/YD²)
ALL CHANNELS	2.5
1.5H:1V SLOPES	2.0
2H:1V SLOPES	2.0
2.5H:1V SLOPES	1.5
3H:1V SLOPES	1.5
3.5H:1V SLOPES	1.0

G.N. RICHARDSON & ASSOCIATES, INC.
Engineering and Geological Services
426 N. BOYLAN AVENUE RALEIGH, N.C. 27603
PHONE-919-828-0577 FAX-919-828-3899 WWW.GNRA.COM

NO.	DATE	REVISION

SEAL

PROJECT TITLE: RED ROCK DISPOSAL, LLC CONSTRUCTION/DEMOLITION LANDFILL PHASE 1 WAKE COUNTY, NC

DRAWING TITLE: PHASE 1 – EROSION & SEDIMENTATION CONTROL DETAILS (SHEET 3 OF 4)

DESIGNED BY: P.K.S.	DRAWN BY: C.T.J.
CHECKED BY: J.M.G.	PROJECT NO: CURTIS-3
SCALE:	DATE:

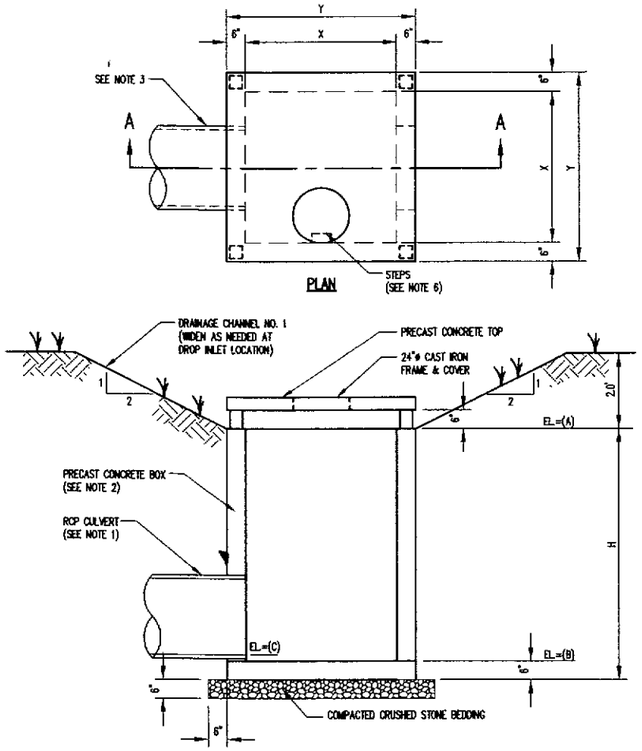

SECTION A-A

DROP INLET SCHEDULE							
OP INLET	CULVERT #	X	Y	A	B	C	H
1	30"	4.0'	5.0'	281.8'	276.8'	277.1'	5.5'
2	30"	4.0'	5.0'	261.8'	256.8'	257.1'	5.5'
T1	30"	4.0'	5.0'	311.7'	307.7'	308.0'	4.5'
T2	30"	4.0'	5.0'	307.7'	303.7'	304.0'	4.5'

NOTES:
1. PROVIDE WATERTIGHT JOINTS ON ALL PIPING.
2. PRECAST CONCRETE BOXES SHALL CONFORM TO THE FOLLOWING REQUIREMENTS:
   A. CONCRETE: COMPRESSIVE STRENGTH 4000 PSI
   B. REINFORCING: ASTM A-615, GRADE 60
   C. MEETS H-20 LOADING.
3. PIPES MAY BE ORIENTED DIFFERENTLY WITH RESPECT TO THE THE CHANNEL THAN DISPLAYED HERE. SEE DRAWING E5 FOR PROPER ORIENTATION.
4. THE CONTRACTOR SHALL PROVIDE ADEQUATE PROTECTION FROM SEDIMENTATION FOR ALL DROP INLETS USING GRAVEL AND WIRE MESH FILTERS OR OTHER METHOD AS APPROVED BY THE ENGINEER.
5. PROVIDE STEPS FOR DROP INLETS WITH H>4.5'. STEPS SHALL HAVE A 16" SPACING THE FULL HEIGHT OF THE DROP INLET. START FIRST STEP 6" BELOW TOP.

2 DROP INLET
DETAIL A / EC4
N.T.S.

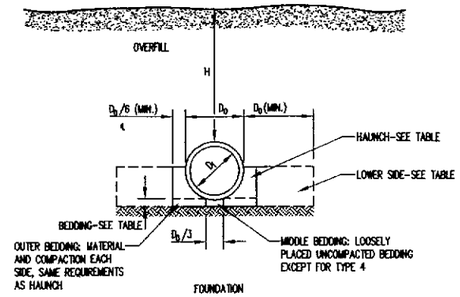

STANDARD EMBANKMENT INSTALLATIONS
FOR CONCRETE PIPE
(BASED ON AMERICAN CONCRETE PIPE ASSOCIATION RECOMMENDATIONS)

DETAIL B / EC4
N.T.S.

STANDARD EMBANKMENT INSTALLATION SOILS AND MINIMUM COMPACTION REQUIREMENTS			
INSTALLATION TYPE	BEDDING THICKNESS	HAUNCH AND OUTER BEDDING	LOWER SIDE
TYPE 1	D_0/24"(600mm) MINIMUM, NOT LESS THAN 3"(75mm). IF ROCK FOUNDATION, USE D_0/12"(300mm) MINIMUM, NOT LESS THAN 6"(150mm).	95% SW, SP, GW, GP	90% SW, SP, GW, GP; 95% ML, SM, GM OR GC, SC WITH <20% PASSING NO.200 SIEVE; OR 100% CL, MH, SC, GC, CH.
TYPE 2	D_0/24"(600mm) MINIMUM, NOT LESS THAN 3"(75mm). IF ROCK FOUNDATION, USE D_0/12"(300mm) MINIMUM, NOT LESS THAN 6"(150mm).	90% SW, SP, GW, GP; OR 95% ML, SM, GM OR GC, SC WITH <20% PASSING NO.200 SIEVE	85% SW, SP, GW, GP; 90% ML, SM, GM OR GC, SC WITH <20% PASSING NO.200 SIEVE; OR 95% CL, MH, SC, GC, CH.
TYPE 3	D_0/24"(600mm) MINIMUM, NOT LESS THAN 3"(75mm). IF ROCK FOUNDATION, USE D_0/12"(300mm) MINIMUM, NOT LESS THAN 6"(150mm).	85% SW, SP, GW, GP; 90% ML, SM, GM OR GC, SC WITH <20% PASSING NO.200 SIEVE; OR 95% CL, MH, SC, GC, CH	85% SW, SP, GW, GP; 90% ML, SM, GM OR GC, SC WITH <20% PASSING NO.200 SIEVE; OR 95% CL, MH, SC, GC, CH.
TYPE 4	NO BEDDING REQUIRED, EXCEPT IF ROCK FOUNDATION, USE D_0/12"(300mm) MINIMUM, NOT LESS THAN 6"(150mm).	NO COMPACTION REQUIRED, EXCEPT IF CL, MH, SC, GC, CH USE 85%	NO COMPACTION REQUIRED, EXCEPT IF CL, MH, SC, GC, CH USE 85%.

NOTES:
1. COMPACTION AND SOIL SYMBOLS (95% SW) REFER TO SW SOIL MATERIAL (USCS CLASSIFICATION) WITH A MINIMUM STANDARD PROCTOR COMPACTION (ASTM D 698) OF 95%.
2. SOIL IN THE OUTER BEDDING, HAUNCH, AND LOWER SIDE ZONES, EXCEPT WITHIN D_0/3 FROM THE PIPE SPRINGLINE, SHALL BE COMPACTED TO AT LEAST THE SAME COMPACTION AS THE MAJORITY OF THE SOIL IN THE OVERFILL ZONE.
3. SUBTRENCHES:
   3.1 A SUBTRENCH IS DEFINED AS A TRENCH WITH ITS TOP BELOW FINISHED GRADE BY MORE THAN 0.1H OR, FOR ROADWAYS, ITS TOP IS AT AN ELEVATION LOWER THAN 1'(0.3m) BELOW THE BOTTOM OF THE PAVEMENT BASE MATERIAL.
   3.2 THE MINIMUM WIDTH OF A SUBTRENCH SHALL BE 1.33 D_0, OR WIDER IF REQUIRED FOR ADEQUATE SPACE TO ATTAIN THE SPECIFIED COMPACTION IN THE HAUNCH AND BEDDING ZONES.
   3.3 FOR SUBTRENCHES WITH WALLS OF NATURAL SOIL, ANY PORTION OF THE LOWER SIDE ZONE IN THE SUBTRENCH WALL SHALL BE AT LEAST AS FIRM AS AN EQUIVALENT SOIL PLACED TO THE COMPACTION REQUIREMENTS SPECIFIED FOR THE LOWER SIDE ZONE AND AS FIRM AS THE MAJORITY IF THE SOIL IN THE OVERFILL ZONE, OR SHALL BE REMOVED AND REPLACED WITH SOIL COMPACTED TO THE SPECIFIED LEVEL.

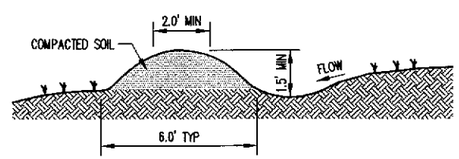

NOTES:
1. THIS DETAIL APPLIES TO DIVERSION BERMS FOR WHICH CONTOURS ARE NOT SHOWN. CONTOURED DIVERSION BERMS HAVE A MINIMUM HEIGHT OF 2.0' AND CREST WIDTH OF 4.0'.

TEMPORARY DIVERSION
2 DETAIL D / EC4
N.T.S.

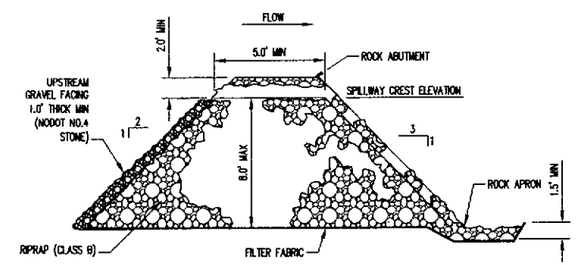

CROSS SECTION

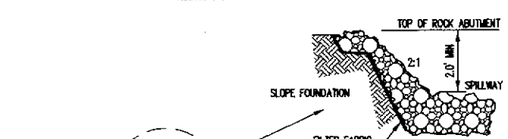

SPILLWAY DETAIL

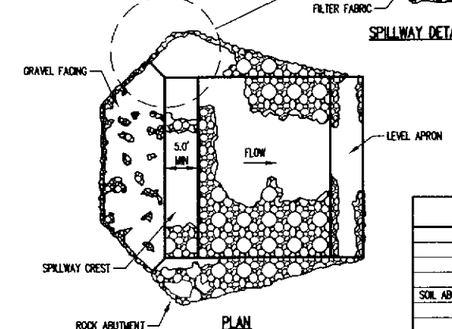

PLAN

ROCK DAM GEOMETRY	
DESCRIPTION	VALUE
UPSTREAM SLOPE	2:1
DOWNSTREAM SLOPE	3:1
APRON WIDTH	6'
SOIL ABUTMENTS:	
CREST ELEVATION	276' MSL
CREST WIDTH	5'
ROCK FILL:	
CREST ELEVATION	274' MSL
CREST WIDTH	15'
WEIR LENGTH	20'

2 ROCK DAM

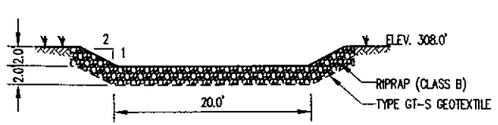

NOTES:
1. PLACE A 1 FOOT THICKNESS OF NODOT NO. 4 STONE ON UPSTREAM FACE OF RIPRAP.
2. CONSTRUCT 6 FOOT WIDE RIPRAP APRON AT DOWNSTREAM EDGE OF WEIR AS SHOWN IN DETAIL C/EC4.

SB-T2 WEIR
2 DETAIL F / EC4
N.T.S.

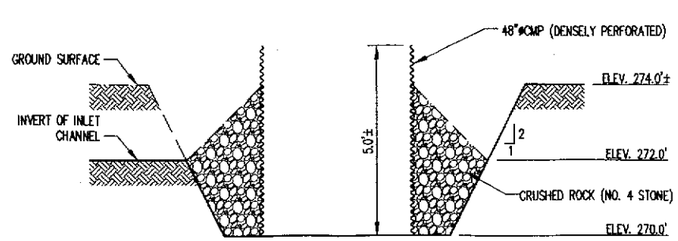

TEMPORARY PUMP STATION

NO.	DATE	REVISION
2	10/03	PHASE 1C REVISIONS

G.N. RICHARDSON & ASSOCIATES, INC.
Engineering and Geological Services
14 N. BOYLAN AVENUE RALEIGH, N.C. 27603
PHONE-919-828-0677 FAX-919-828-3899 WWW.GNRA.COM

SEAL

PROJECT TITLE: RED ROCK DISPOSAL, LLC CONSTRUCTION/DEMOLITION LANDFILL PHASE 1 WAKE COUNTY, NC

DRAWING TITLE: PHASE 1 - EROSION & SEDIMENTATION CONTROL DETAILS (SHEET 4 OF 5)

DESIGNED BY: T.B.M.	DRAWN BY: C.T.J.
CHECKED BY: J.M.G.	PROJECT NO.: RED ROCK-2

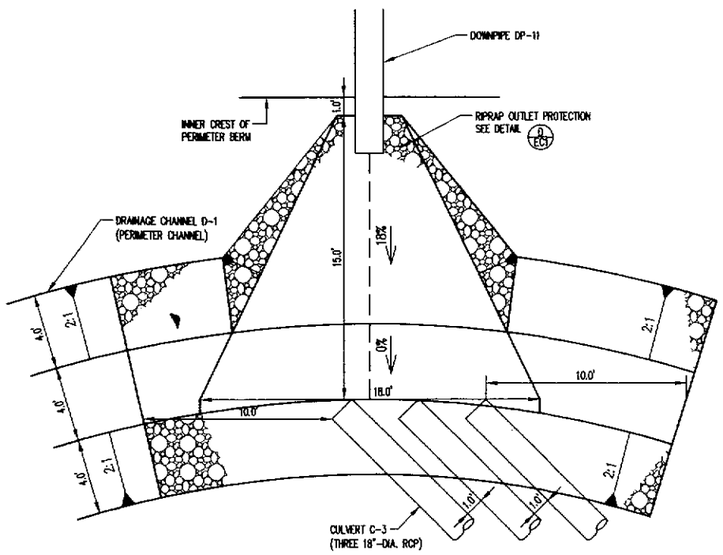

CULVERT C-3 INLET

DETAIL A EC5
SCALE 1"=4'

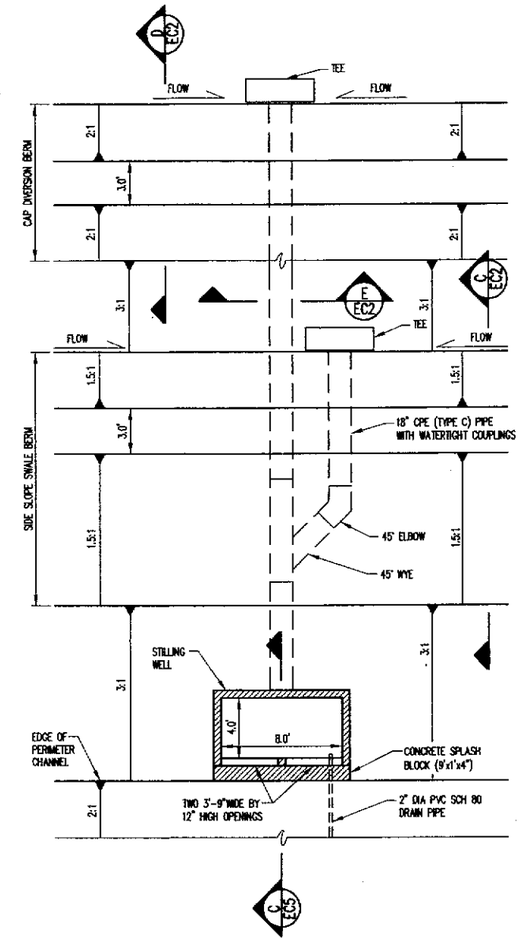

DOWN PIPE WITH STILLING WELL ALTERNATE

DETAIL B EC5
SCALE 1"=5'

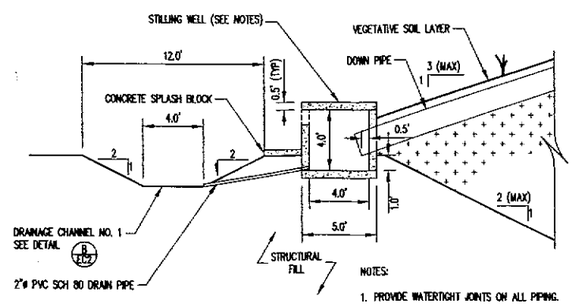

STILLING WELL ALTERNATE

DETAIL C EC5
SCALE 1"= 5'

NOTES:

1. PROVIDE WATERTIGHT JOINTS ON ALL PIPING.
2. PRECAST CONCRETE BOXES SHALL CONFORM TO THE FOLLOWING REQUIREMENTS:
   A. CONCRETE: COMPRESSIVE STRENGTH 4000 PSI
   B. REINFORCING: ASTM A-615, GRADE 60
   C. MEETS H-20 LOADING.
3. PIPES MAY BE ORIENTED DIFFERENTLY WITH RESPECT TO THE CHANNEL THAN DISPLAYED HERE. SEE DRAWING E5 FOR PROPER ORIENTATION.

NO	DATE	REVISION
2	10/03	PHASE 1C REVISIONS

G.N. RICHARDSON & ASSOCIATES, INC.
Engineering and Geological Services
14 N. BOYLAN AVENUE RALEIGH, N.C. 27603
PHONE-919-828-0577 FAX-919-828-3899 WWW.GNRA.COM

SEAL

SEAL

PROJECT TITLE: RED ROCK DISPOSAL, LLC CONSTRUCTION/DEMOLITION LANDFILL PHASE 1 WAKE COUNTY, NC

DRAWING TITLE: PHASE 1 – EROSION & SEDIMENTATION CONTROL DETAILS (SHEET 5 OF 5)

DESIGNED BY: T.B.M.	DRAWN BY: C.T.J.
CHECKED BY: J.M.G.	PROJECT NO.: RED ROCK-2
SCALE:	DATE:

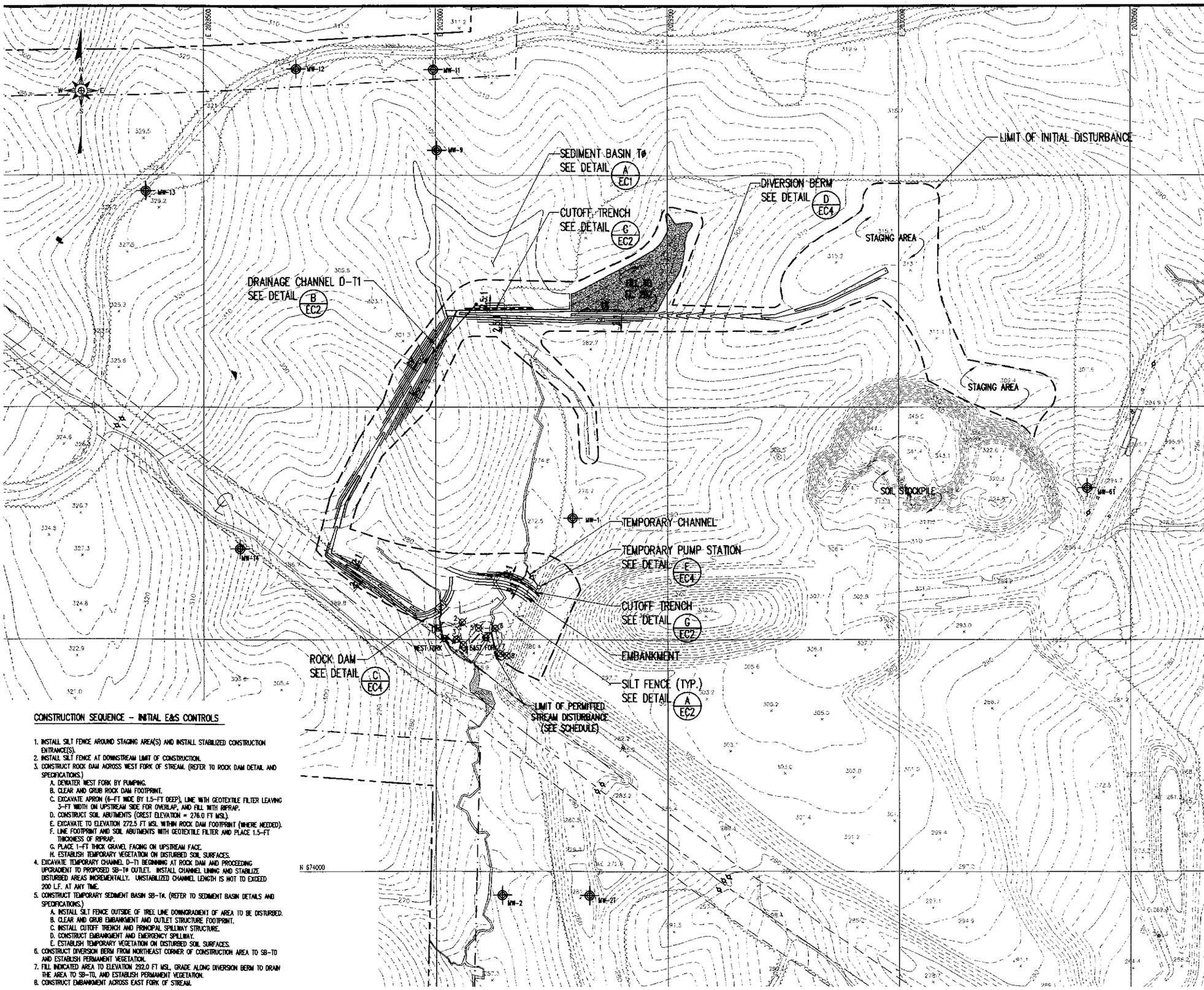

SCHEDULE OF LIMITS OF PERMITTED STREAM DISTURBANCE

LOCATION	NORTHING	EASTING
WEST FORK	674502.30	2029018.22
EAST FORK	674504.17	2029107.27

NOTE: NO EARTH DISTURBANCE OR SEDIMENT DEPOSITION PERMITTED DOWN STREAM OF THESE POINTS.

SCHEDULE OF CONTROL POINTS FOR SILT FENCE NEAR LIMITS OF STREAM DISTURBANCE

CONTROL POINT NUMBER	NORTHING	EASTING
1	674524.49	2029004.56
2	674536.89	2029056.52
3	674500.82	2029044.34
4	674489.34	2029058.78
5	674524.64	2029091.50
6	674524.21	2029127.70
7	674470.60	2029139.04
8	674466.24	2029153.00

NOTE: THE LOCATION OF THE SILT FENCE WAS SELECTED TO PROVIDE APPROXIMATELY 20-FEET OF UNDISTURBED BUFFER UPSTREAM OF THE LIMITS OF PERMITTED STREAM DISTURBANCE.

LEGEND

- 300 — EXISTING 10' CONTOUR
- EXISTING 2' CONTOUR
- 280 — PROPOSED SUBGRADE CONTOUR (BASE OF WASTE) (SEE NOTE 4)
- SILT FENCE
- LIMIT OF DISTURBANCE
- PROPERTY LINE (SEE REFERENCE 2)
- 100' BUFFER (SEE NOTE 1)
- DELINEATED WETLAND AREAS (SEE REFERENCE 4)
- DELINEATED CHANNEL (SEE REFERENCE 4)
- MW-1 — MONITORING WELL (SEE NOTE 7)
- PZ-2 — PIEZOMETER

CONSTRUCTION SEQUENCE - INITIAL E&S CONTROLS

1. INSTALL SILT FENCE AROUND STAGING AREA(S) AND INSTALL STABILIZED CONSTRUCTION ENTRANCE(S).
2. INSTALL SILT FENCE AT DOWNSTREAM LIMIT OF CONSTRUCTION.
3. CONSTRUCT ROCK DAM ACROSS WEST FORK OF STREAM. (REFER TO ROCK DAM DETAIL AND SPECIFICATIONS.)
   - A. DEWATER WEST FORK BY PUMPING.
   - B. CLEAR AND GRUB ROCK DAM FOOTPRINT.
   - C. EXCAVATE APRON (6-FT WIDE BY 1.5-FT DEEP), LINE WITH GEOTEXTILE FILTER LEAVING 3-FT WIDTH ON UPSTREAM SIDE FOR OVERLAP, AND FILL WITH RIPRAP.
   - D. CONSTRUCT SOIL ABUTMENTS (CREST ELEVATION = 276.0 FT MSL).
   - E. EXCAVATE TO ELEVATION 272.5 FT MSL WITHIN ROCK DAM FOOTPRINT (WHERE NEEDED).
   - F. LINE FOOTPRINT AND SOIL ABUTMENTS WITH GEOTEXTILE FILTER AND PLACE 1.5-FT THICKNESS OF RIPRAP.
   - G. PLACE 1-FT THICK GRAVEL FACING ON UPSTREAM FACE.
   - H. ESTABLISH TEMPORARY VEGETATION ON DISTURBED SOIL SURFACES.
4. EXCAVATE TEMPORARY CHANNEL D-T1 BEGINNING AT ROCK DAM AND PROCEEDING UPGRADIENT TO PROPOSED SB-T# OUTLET. INSTALL CHANNEL LINING AND STABILIZE DISTURBED AREAS INCREMENTALLY. UNSTABILIZED CHANNEL LENGTH IS NOT TO EXCEED 200 L.F. AT ANY TIME.
5. CONSTRUCT TEMPORARY SEDIMENT BASIN SB-T#. (REFER TO SEDIMENT BASIN DETAILS AND SPECIFICATIONS.)
   - A. INSTALL SILT FENCE OUTSIDE OF TREE LINE DOWNGRADIENT OF AREA TO BE DISTURBED.
   - B. CLEAR AND GRUB EMBANKMENT AND OUTLET STRUCTURE FOOTPRINT.
   - C. INSTALL CUTOFF TRENCH AND PRINCIPAL SPILLWAY STRUCTURE.
   - D. CONSTRUCT EMBANKMENT AND EMERGENCY SPILLWAY.
   - E. ESTABLISH TEMPORARY VEGETATION ON DISTURBED SOIL SURFACES.
6. CONSTRUCT DIVERSION BERM FROM NORTHEAST CORNER OF CONSTRUCTION AREA TO SB-T0 AND ESTABLISH PERMANENT VEGETATION.
7. FILL INDICATED AREA TO ELEVATION 292.0 FT MSL, GRADE ALONG DIVERSION BERM TO DRAIN THE AREA TO SB-T0, AND ESTABLISH PERMANENT VEGETATION.
8. CONSTRUCT EMBANKMENT ACROSS EAST FORK OF STREAM.

NOTES:

1. THIS BUFFER REPRESENTS A TYPE A BUFFER YARD AND A TRANSITIONAL BUFFER IN ACCORDANCE WITH WAKE COUNTY ZONING REQUIREMENTS. THIS 100-FOOT BUFFER ALSO INCLUDES, BUT DOES NOT SHOW, A 50-FOOT UNDISTURBED BUFFER ALSO PER WAKE COUNTY ZONING REQUIREMENTS.
2. ELEVATIONS REFERENCE U.S.G.S. VERTICAL DATUM (MSL).
3. GRID COORDINATES REFERENCE NC STATE PLANE SYSTEM (NAD 1983).
4. THE SUBGRADE ELEVATIONS IN PHASE 1C HAVE BEEN ESTABLISHED BASED ON A CONSERVATIVE ISOLATION DISTANCE ABOVE SEASONAL HIGH GROUND WATER LEVEL (I.E. 6 FEET).
6. CP&L APROVAL WILL BE RECEIVED PRIOR TO PLACEMENT OF ANY SOIL OR WASTE MATERIAL WITHIN THE 100' UTILITY EASEMENT.
7. MONITORING WELLS MW-1 AND MW-9 TO BE ABANDONED.

REFERENCES:

1. OVERALL SITE TOPOGRAPHY PREPARED BY SPATIAL DATA CONSULTANTS, INC., BASED ON AERIAL PHOTOGRAPHY DATED FEBRUARY 8, 2003.
2. THE PROPERTY LINE SHOWN REFERENCES DRAWING TITLED, "BOUNDARY SURVEY FOR WASTE INDUSTRIES, INC.", PREPARED BY SURVEY SOLUTIONS, P.C. DATED 12/27/00, SCALE 1"=400'.
3. CP&L POWERLINE/EASEMENT REFERENCES THE BOUNDARY SURVEY.
4. DELINEATION PERFORMED BY SOIL & ENVIRONMENTAL CONSULTANTS;

NO.	DATE	REVISION
1	10/03	NEW DRAWING

G.N. RICHARDSON & ASSOCIATES, INC.
Engineering and Geological Services
14 N. BOYLAN AVENUE RALEIGH, N.C. 27603
PHONE-919-828-0677 FAX-919-828-3899 WWW.GNRA.COM

SEAL

PROJECT TITLE: RED ROCK DISPOSAL, LLC CONSTRUCTION & DEMOLITION LANDFILL PHASE 1C WAKE COUNTY, NC

DRAWING TITLE: PHASE 1C INITIAL GRADING AND DRAINAGE PLAN

DESIGNED BY: T.B.M.	DRAWN BY: C.T.J.
CHECKED BY: J.M.G.	PROJECT NO.: RED ROCK-2

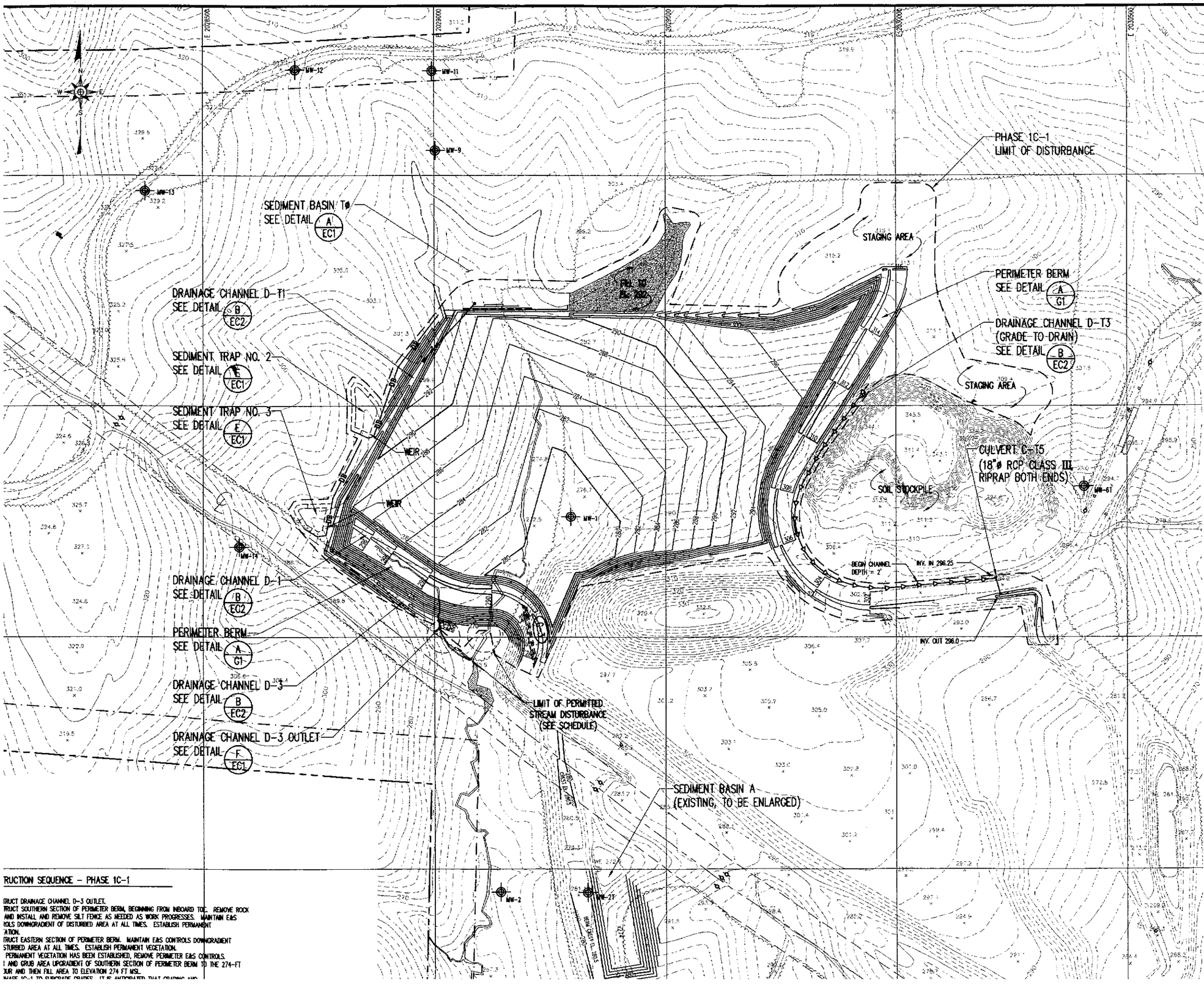

SCHEDULE OF LIMITS OF PERMITTED STREAM DISTURBANCE

LOCATION	NORTHING	EASTING
WEST FORK	674502.30	2029018.22
EAST FORK	674504.17	2029107.27

NOTE: NO EARTH DISTURBANCE OR SEDIMENT DEPOSITION PERMITTED DOWN STREAM OF THESE POINTS.

LEGEND

- EXISTING 10' CONTOUR
- EXISTING 2' CONTOUR
- 280 — PROPOSED SUBGRADE CONTOUR (BASE OF WASTE) (SEE NOTE 4)
- LIMIT OF SEDIMENT BASIN/TRAP
- DB — DIVERSION BERM (SEE DETAIL D/EC1)
- CHANNEL
- LIMIT OF FILL AREA
- LIMIT OF DISTURBANCE
- PROPERTY LINE (SEE REFERENCE 2)
- 100' BUFFER (SEE NOTE 1)
- DELINEATED WETLAND AREAS (SEE REFERENCE 4)
- DELINEATED CHANNEL (SEE REFERENCE 4)
- C-3 — CULVERT
- MW-1 — MONITORING WELL (SEE NOTE 7)
- PZ-2 — PIEZOMETER

NOTES:

1. THIS BUFFER REPRESENTS A TYPE A BUFFER YARD AND A TRANSITIONAL BUFFER IN ACCORDANCE WITH WAKE COUNTY ZONING REQUIREMENTS. THIS 100-FOOT BUFFER ALSO INCLUDES, BUT DOES NOT SHOW, A 50-FOOT UNDISTURBED BUFFER ALSO PER WAKE COUNTY ZONING REQUIREMENTS.
2. ELEVATIONS REFERENCE U.S.G.S. VERTICAL DATUM (MSL).
3. GRID COORDINATES REFERENCE NC STATE PLANE SYSTEM (NAD 1983).
4. THE SUBGRADE ELEVATIONS IN PHASE 1C HAVE BEEN ESTABLISHED BASED ON AN ISOLATION DISTANCE ABOVE SEASONAL HIGH GROUND WATER LEVEL OF 4 FEET.
6. CP&L APROVAL WILL BE REQEVED PRIOR TO PLACEMENT OF ANY SOIL OR WASTE MATERIAL WITHIN THE 100' UTILITY EASEMENT.
7. MONITORING WELLS MW-1 AND MW-9 TO BE ABANDONED.

REFERENCES:

1. OVERALL SITE TOPOGRAPHY PREPARED BY SPATIAL DATA CONSULTANTS, INC., BASED ON AERIAL PHOTOGRAPHY DATED FEBRUARY 8, 2003.
2. THE PROPERTY LINE SHOWN REFERENCES DRAWING TITLED, "BOUNDARY SURVEY FOR WASTE INDUSTRIES, INC.", PREPARED BY SURVEY SOLUTIONS, P.C. DATED 12/27/00, SCALE 1"=400'.
3. CP&L POWERLINE/EASEMENT REFERENCES THE BOUNDARY SURVEY.
4. DELINEATION PERFORMED BY SOIL & ENVIRONMENTAL CONSULTANTS;

RUCTION SEQUENCE - PHASE 1C-1

TRUCT DRAINAGE CHANNEL D-3 OUTLET.
TRUCT SOUTHERN SECTION OF PERIMETER BERM, BEGINNING FROM INBOARD TOE. REMOVE ROCK AND INSTALL AND REMOVE SILT FENCE AS NEEDED AS WORK PROGRESSES. MAINTAIN E&S KOLS DOWNGRADIENT OF DISTURBED AREA AT ALL TIMES. ESTABLISH PERMANENT ATION.
TRUCT EASTERN SECTION OF PERIMETER BERM. MAINTAIN E&S CONTROLS DOWNGRADIENT STURBED AREA AT ALL TIMES. ESTABLISH PERMANENT VEGETATION.
PERMANENT VEGETATION HAS BEEN ESTABLISHED, REMOVE PERIMETER E&S CONTROLS.
AND GRUB AREA UPGRADIENT OF SOUTHERN SECTION OF PERIMETER BERM TO THE 274-FT OUR AND THEN FILL AREA TO ELEVATION 274 FT MSL.
PHASE 1C-1 TO SUBGRADE PHASES. IT IS ANTICIPATED THAT GRADING AND

G.N. RICHARDSON & ASSOCIATES, INC.
Engineering and Geological Services
14 N. BOYLAN AVENUE RALEIGH, N.C. 27603
PHONE-919-828-0577 FAX-919-828-3899 WWW.GNRA.COM

DATE	NO.	REVISION
4/04	3	REVISED GRADING
10/03	2	NEW DRAWING

SEAL

PROJECT TITLE: RED ROCK DISPOSAL, LLC
CONSTRUCTION & DEMOLITION
LANDFILL PHASE 1C
WAKE COUNTY, NC

DRAWING TITLE: PHASE 1C-1
SUBGRADE AND
DRAINAGE PLAN

DESIGNED BY: T.B.M.	DRAWN BY: C.T.J.
CHECKED BY: J.W.G.	PROJECT NO.: RED ROCK-2

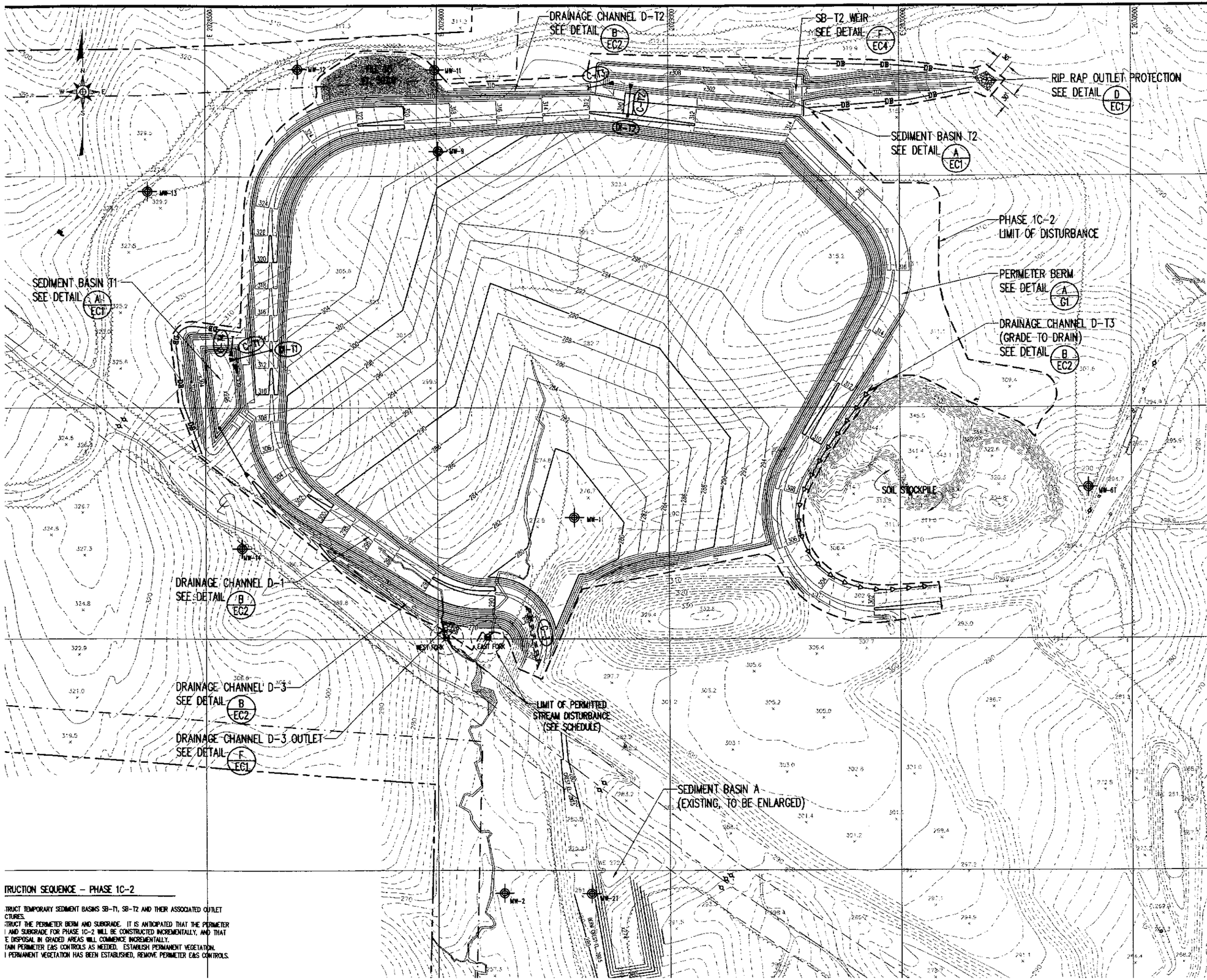

SCHEDULE OF LIMITS OF PERMITTED STREAM DISTURBANCE

LOCATION	NORTHING	EASTING
WEST FORK	674502.30	2029018.22
EAST FORK	674504.17	2029107.27

NOTE: NO EARTH DISTURBANCE OR SEDIMENT DEPOSITION PERMITTED DOWN STREAM OF THESE POINTS.

LEGEND

- EXISTING 10' CONTOUR
- EXISTING 2' CONTOUR
- PROPOSED SUBGRADE CONTOUR (BASE OF WASTE) (SEE NOTE 4)
- DIVERSION BERM (SEE DETAIL D EC4)
- CHANNEL
- LIMIT OF FILL AREA
- LIMIT OF DISTURBANCE
- PROPERTY LINE (SEE REFERENCE 2)
- 100' BUFFER (SEE NOTE 1)
- DELINEATED WETLAND AREAS (SEE REFERENCE 4)
- DELINEATED CHANNEL (SEE REFERENCE 4)
- C-T1 CULVERT
- DI-T1 DROP INLET
- MW-1 MONITORING WELL (SEE NOTE 7)
- PZ-2 PIEZOMETER

NOTES:

1. THIS BUFFER REPRESENTS A TYPE A BUFFER YARD AND A TRANSITIONAL BUFFER IN ACCORDANCE WITH WAKE COUNTY ZONING REQUIREMENTS. THIS 100-FOOT BUFFER ALSO INCLUDES, BUT DOES NOT SHOW, A 50-FOOT UNDISTURBED BUFFER ALSO PER WAKE COUNTY ZONING REQUIREMENTS.
2. ELEVATIONS REFERENCE U.S.G.S. VERTICAL DATUM (MSL).
3. GRID COORDINATES REFERENCE NC STATE PLANE SYSTEM (NAD 1983).
4. THE SUBGRADE ELEVATIONS IN PHASE 1C HAVE BEEN ESTABLISHED BASED ON AN ISOLATION DISTANCE ABOVE SEASONAL HIGH GROUND WATER LEVEL OF 4 FEET.
6. CP&L APROVAL WILL BE RECEIVED PRIOR TO PLACEMENT OF ANY SOIL OR WASTE MATERIAL WITHIN THE 100' UTILITY EASEMENT.
7. MONITORING WELLS MW-1 AND MW-9 TO BE ABANDONED.

REFERENCES:

1. OVERALL SITE TOPOGRAPHY PREPARED BY SPATIAL DATA CONSULTANTS, INC., BASED ON AERIAL PHOTOGRAPHY DATED FEBRUARY 8, 2003.
2. THE PROPERTY LINE SHOWN REFERENCES DRAWING TITLED, "BOUNDARY SURVEY FOR WASTE INDUSTRIES, INC.", PREPARED BY SURVEY SOLUTIONS, P.C. DATED 12/27/00, SCALE 1"=400'.
3. CP&L POWERLINE/EASEMENT REFERENCES THE BOUNDARY SURVEY.
4. DELINEATION PERFORMED BY SOIL & ENVIRONMENTAL CONSULTANTS;

TRUCTION SEQUENCE – PHASE 1C-2

TRUCT TEMPORARY SEDIMENT BASINS SB-T1, SB-T2 AND THEIR ASSOCIATED OUTLET CTURES.
TRUCT THE PERIMETER BERM AND SUBGRADE. IT IS ANTICIPATED THAT THE PERIMETER AND SUBGRADE FOR PHASE 1C-2 WILL BE CONSTRUCTED INCREMENTALLY, AND THAT E DISPOSAL IN GRADED AREAS WILL COMMENCE INCREMENTALLY.
TAIN PERIMETER E&S CONTROLS AS NEEDED. ESTABLISH PERMANENT VEGETATION.
PERMANENT VEGETATION HAS BEEN ESTABLISHED, REMOVE PERIMETER E&S CONTROLS.

NO.	DATE	REVISION
3	4/04	REVISED GRADING
2	10/03	NEW DRAWING

G.N. RICHARDSON & ASSOCIATES, INC.
Engineering and Geological Services
14 N. BOYLAN AVENUE RALEIGH, N.C. 27603
PHONE-919-828-0577 FAX-919-828-3899 WWW.GNRA.COM

SEAL

PROJECT TITLE: RED ROCK DISPOSAL, LLC CONSTRUCTION & DEMOLITION LANDFILL PHASE 1C WAKE COUNTY, NC

DRAWING TITLE: PHASE 1C-2 SUBGRADE AND DRAINAGE PLAN

DESIGNED BY: T.B.W.	DRAWN BY: C.T.J.
CHECKED BY: J.M.G.	PROJECT NO.: RED ROCK-2