Fac/Perm/Co ID #	Date	Doc ID#
92-09	11/21/10	DIN 9357 DW

CDM

5400 Glenwood Avenue, Suite 300
Raleigh, North Carolina 27612
tel: 919-325-3500
fax: 919-781-5730

RECEIVED
OCT - 5 2009
SOLID WASTE SECTION

September 29, 2009

Ms. Donna J. Wilson
Environmental Engineer
North Carolina Department of Environmental and Natural Resources
Division of Waste Management
Permitting Branch, Solid Waste Section
1646 Mail Service Center
Raleigh, NC 27699-1646

Subject: Wake County, North Carolina
North Wake Landfill Phase 2 Closure
Post Closure Permit Modification – Response to Comments

Dear Ms. Wilson:

On behalf of Wake County, CDM is pleased to submit revisions to the Post Closure Permit Modification per your review comments received via e-mail on September 24, 2009. For your convenience, CDM has formatted this letter correspondence to present your comment followed immediately by our response in *italics*.

1. I've reviewed the response to comments on the North Wake Landfill post-closure modifications, dated Aug. 31, 2009, and I have an additional comment. More frequent jet cleaning and camera inspection of the leachate system is needed for the first 5 years, then the frequency can be reevaluated by the County and the Section. For the first 5 years, the leachate lines should be cleaned every year, and the lines should be camera inspected initially and at least every 3 years, but more often if there are blockages detected.

   Section 2.2, page 2-9 has been revised to incorporate the aforementioned comments and is included in ***Attachment No. 1****.*

If you have any questions or need additional information, please do not hesitate to call me at (919) 787-5620.

Very truly yours,

W. Michael Brinchek, P.E.
Project Manager
Camp Dresser & McKee

Enclosures
cc: Eric Staehle, WCFD&C
John Roberson, WCFD&C
Johnny Beal, WCSW
Lee Squires, WCSW
Brenan Buckley, CDM

Attachment No. 1

The sump pump flow meter vault shall be inspected each quarter by a qualified inspector who is knowledgeable in the operation of sump pump flow meters. The inspector shall manually operate each pump to ensure that they are working properly. The flow meter calibration shall be checked quarterly and scheduled for recalibration, as needed. Flow meter records shall be monitored and placed in the post-closure logbook. A summary report as to the condition of the sump pump and metering facilities shall be recorded in the post-closure logbook along with photographs of any items of concern.

The clean-outs shall also be inspected for damage on a quarterly basis. The protruding portion of each clean-out shall be checked for damage. If problems with the leachate collection system are discovered, assessment and then repairs (if needed) shall begin immediately.

All piping of the leachate collection system will be cleaned, by means of high pressure water jet on or before January 2010 and every year thereafter for a minimum of five years. At which time the frequency may be re-evaluated by NCDENR SWS. In addition, camera inspection of all lines will be performed during the initial cleaning service and every three years for a minimum of five years, but more often when obstructions within the lines are detected.

To prevent public access to the leachate clean-outs or sumps they will be secured by flanged end caps or by manhole covers respectively.

2.2.3 Groundwater Monitoring Wells

Inspection of the ground water monitoring wells will take place semi-annually during scheduled sampling events. The inspection will consist of verifying the condition of the monitoring wells to ensure that no damage has occurred and that representative ground water samples can be collected. The inspector should note the following:

1) The total depth of the well shall be recorded every time a water sample is collected or a water level reading is taken to check if sediment has accumulated at the bottom of the well or if the well has been damaged. If sediment build-up has occurred, the sediment shall be removed by pumping or bailing.

2) If turbid samples are collected from a well, redevelopment of the well will be performed.

3) The above-ground protective casing shall be inspected for damage. The protective casing, including the concrete base, shall be structurally sound and free of any damage or corrosion. The lockable cover and lock shall also be checked at this time. Locks will be replaced as needed to maintain security.

Wake County, North Carolina

North Wake Solid Waste Management Facility

North Wake Landfill Phase II Final Closure

Post-Closure Plan Permit Modification

September 2009

WAKE COUNTY
NORTH CAROLINA

Permit Application

Section 2
Post-Closure Plan

Rule .1617(a)(1)(E), of the North Carolina Solid Waste Regulations Section 15A NCAC 13B .1600, requires owners/operators of municipal solid waste landfill (MSWLF) units to prepare a post-closure plan. The purpose of the plan is to provide the necessary information for preserving the integrity of the landfill facility in its post-closure life. This post-closure plan specifically addresses any planned uses for the landfill after closure and maintenance activities for the closure cap, landfill gas control system, leachate collection system, ground water monitoring wells, and erosion and sedimentation control. This plan also addresses certification and financial assurance requirements.

Post-closure care will begin immediately following final closure of the landfill. Post-closure care may decrease from the minimum time period of 30 years specified in the regulations if the County can demonstrate that the reduced period will pose no threat to human health or the environment. However, the North Carolina Department of Environment and Natural Resources, Solid Waste Section reserves the right to increase the post-closure care period if it is deemed necessary to protect human health and the environment.

2.1 Planned Use of Landfill After Closure

The North Wake Landfill (NWLF), located off Durant Road on Deponie Drive in North Raleigh, has been in operation since 1988 and has recently closed and no longer accepts municipal solid waste. Closure operations are underway and scheduled to be completed by early 2009. In 2005, in preparation for the closure, the County hired the consultant team of OBS Landscape Architects and CDM to facilitate a public planning process and produce a Master Plan for post closure use. The project planning team included representatives from Wake County, City of Raleigh, Wake County Public School System, North Carolina Department of Environment and Natural Resources (NCDENR), a neighborhood citizens committee and surrounding community. The final Master Plan was accepted by County Commissioners in February 2006. The final Master Plan includes trails, picnic shelters, restrooms, playgrounds, elementary school, athletic fields, and EMS facility (See Figure 1).

The athletic fields, playgrounds, elementary school, and EMS facility are currently planned in what is now identified as the borrow area. Although part of the overall development of the Wake County property, proposed future facilities within the borrow area are outside the permitted landfill boundary and will not be monitored or maintained as part of post-closure care plan.

This first phase of the Master Plan includes development generally along the northern perimeter of the Subtitle D landfill, indicated by areas B, C, E, F, and G (See Figure 2).

North Wake Landfill Post Closure Land Use Master Plan

Legend

A. Elementary School, Athletic and Community Recreation Complex
- Elementary School
- Football Fields
- Baseball Fields
- Softball Fields
- Multi-purpose Fields
- School Multi-purpose Field
- Community Building
- Restrooms and Concessions Buildings
- Playground
- Skate Park
- Picnic Shelters
- Parking
- Public Art
- EMS Facility

B. Braided Pathways
- Paved Pedestrian / Bike Trail
- Central Pond
- Hike and Bike Trails (unpaved)
- Public Art
- Trail Head Parking

C. The Meadow
- Hike and Bike Trails (unpaved)
- Native Plants Garden
- Open Space Multi-Use
- Playground
- Paved Pedestrian / Bike Trails
- Picnic Shelters
- Restrooms
- Outdoor Classroom
- Parking
- Secured Area / Gas Flare, Leachate Tank and Maintenance Building

D. Prospect Hill
- Hike and Bike Trails (unpaved)
- Paved Pedestrian / Bike Trails
- Top of Hill: Viewing Shelter, Open Space, Public Art, Loop Trail
- Wetland
- Greenway Connection
- Shelter

E. Braided Pathways
- Paved Pedestrian / Bike Trail
- Hike and Bike Trails (unpaved)
- Public Art
- Trail Head Parking

F. Kids and Canines Recreation Area
- Dog Park
- Hike and Bike Trails (unpaved)
- Greenway Connection
- Restroom
- Top of Hill: Viewing Shelter, Public Art, Playground
- Paved Pedestrian / Bike Trail
- Parking

G. Top of the Hill Education Center
- Reduce Pavilion
- Reuse Pavilion
- Recycle Pavilion
- Public Art
- Pedestrian Trail
- Simulated Landfill Exhibit
- Programmed Vehicle Parking

H. GSA Service Center
- Proposed Office Expansion
- Storage / Maintenance Expansion
- Fueling Station

I. Solid Waste Services
- Convenience Center (Super Center)
- Household Hazardous Waste
- Multi-Material
- Maintenance
- Communications Tower
- Employee Office
- Office and Employee Training Center
- Temporary EMS Facility

J. Future Development Area
- J1 Potential Office Expansion & fueling station
- J2 Potential EMS Facility
- J3 Potential Office Expansion & EMS Facility

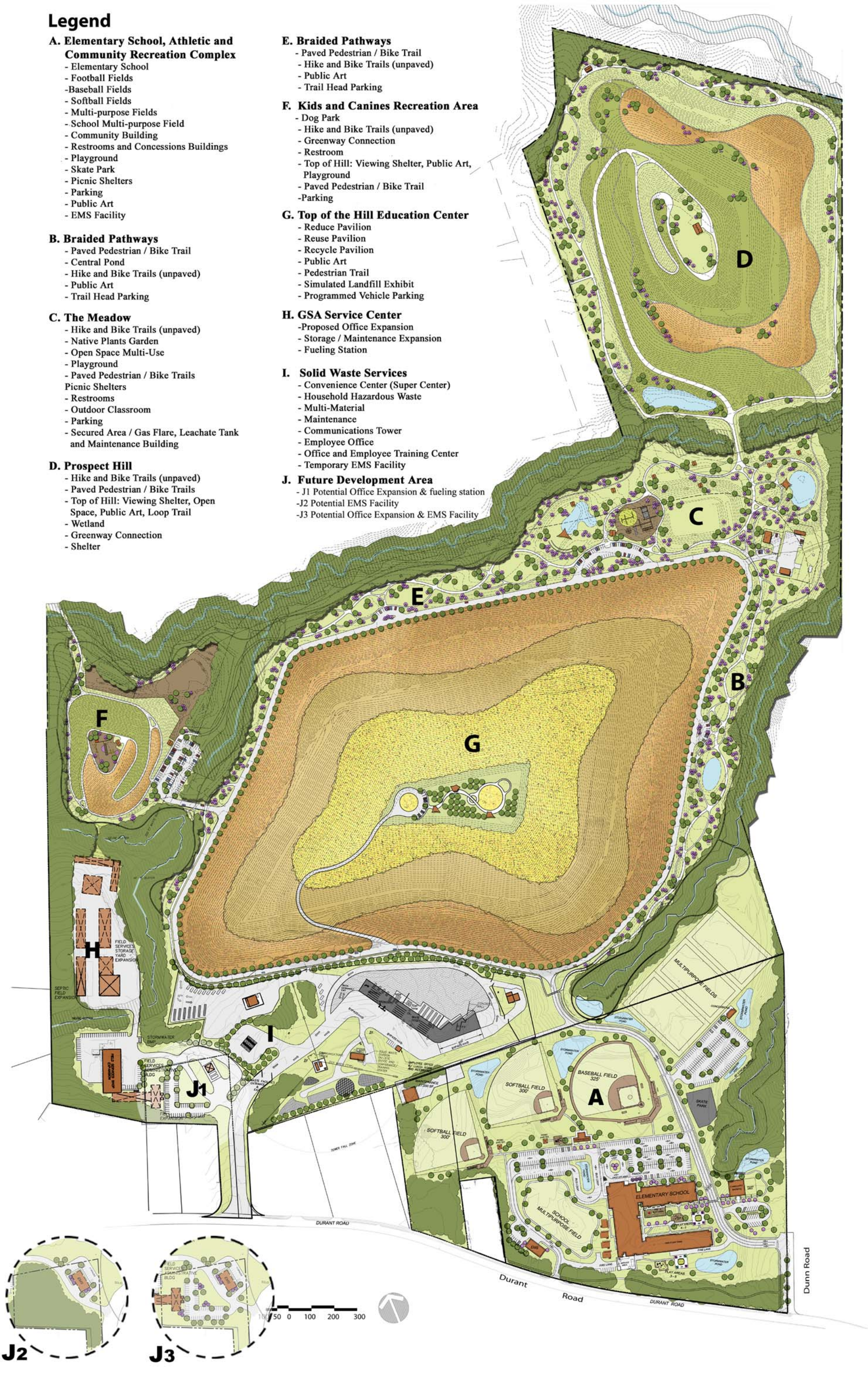

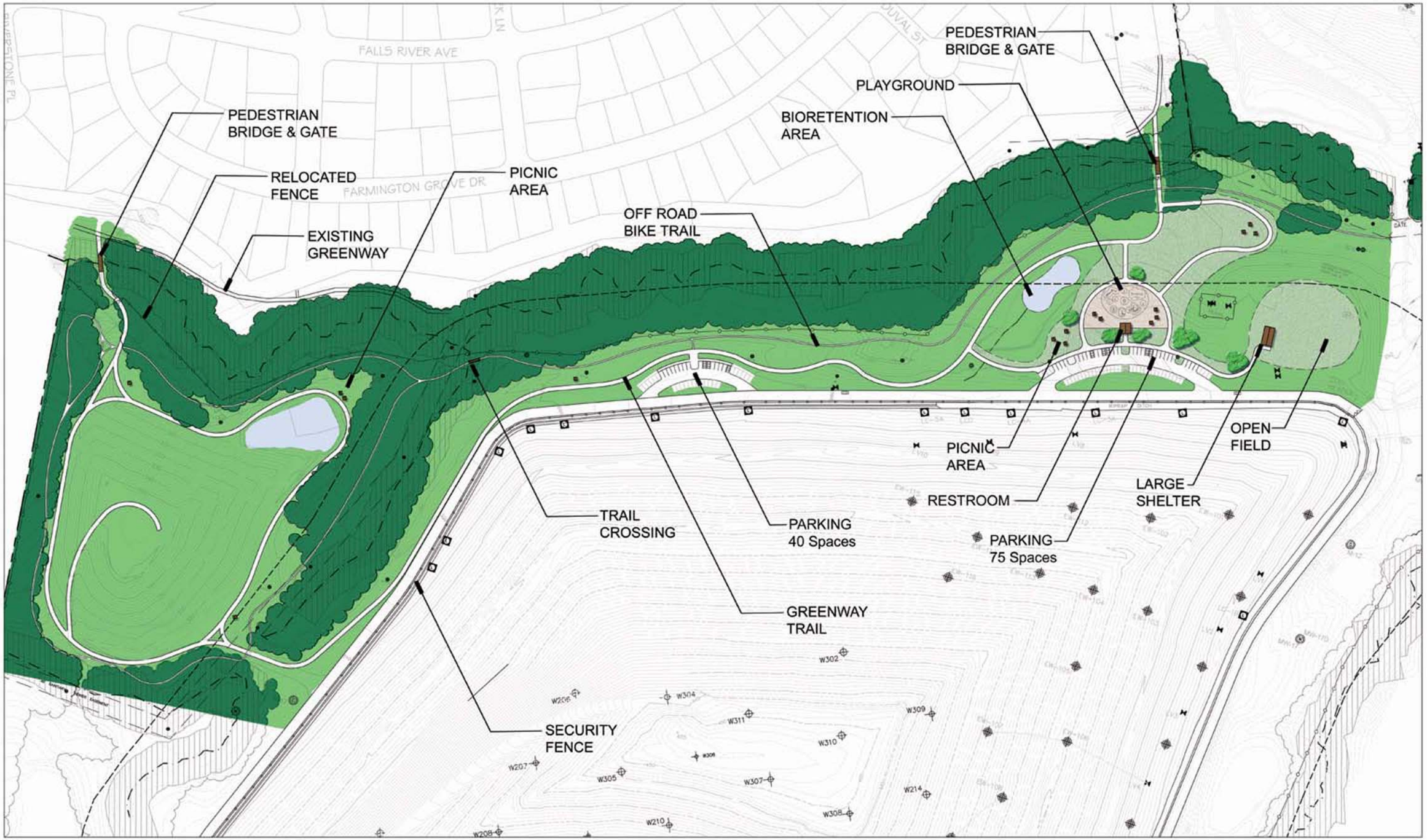

NORTH WAKE LANDFILL PARK

PHASE 1

100 50 0 100 200 300

Figure 2

All subsequent phases will be submitted to the North Carolina Department of Environment and Natural Resources, Division of Waste Management, Solid Waste Section (SWS) for approval as a permit modification prior to development of additional phases. This design is consistent with the concepts of the Master Plan. As the details of the design were developed, the NWLF citizens committee continued to be active participants in this design process. Wake County representatives, City of Raleigh and NCDENR also contributed to development of the Master Plan.

The first phase of the park includes trails, playground, restroom facility, open space play area and large picnic shelter (75-100 person). A paved pedestrian path is woven throughout the different park areas and connects to the adjacent neighborhoods and the City of Raleigh greenway system at two locations via pedestrian bridges. There are also approximately 2.5 miles of off-road bicycling and hiking trails planned. These off road trails will be constructed through grant funding. Initially Vehicular access to the park facility will be through the existing landfill entrance from Durant Road and Deponie Drive along the existing internal perimeter road that traverses around the main landfill. Parking areas are provided at the main day use area and along the perimeter road to provide access to the trail system. Additional amenities throughout the park will include picnic areas and interpretive signage. Once the school and the park are built on the borrow site, access to the park will be redirected to a common route off of a newly established section of Dunn Road. Distribution of vehicles within the landfill park will continue to be via the internal perimeter road.

Access to the park will be limited to the two greenway entrances and the landfill park entrance. These entrances will be open from 8 a.m. to sunset. Site security will be maintained by the existing perimeter fence and gates will be installed at all entrances to secure each entrance during hours outside of operations.

An additional amenity to the park includes access to the top of the Subtitle D landfill. Pedestrians and bicyclists will be allowed access to the top of the landfill along a walkway that serves as the maintenance access road. Vehicular access will be controlled and limited. This access drive will lead to a loop trail at the top of the hill that has benches, interpretive signage, and special plantings as shown on Sheet LA-9. The loop trail will allow 360-degree long distance views from the top of the landfill to the surrounding area. Key observation / orientation points will be provided at (2) locations along this loop trail. The guide rail (see Figure 3) surrounding the accessible area on top of the hill will be installed to discourage access on the side slopes outside the loop trail. The guide rail and benches will be the only structures installed on top of the landfill. Guide rail will also be placed along the outside edge of the perimeter channel as a visual barrier to keep people off of the landfill sideslopes. Signage will be posted on the guide rail prohibiting public access.

To provide protection to the underlying closure cap system a minimum of 4 feet of cover will be placed over the landfill liner in areas that the public will be allowed to access. Additional material will be added to increase the thickness of the vegetative cover layer such that the structures (benches and guide rails) incorporated into the loop trail amenity above, can be properly installed without penetrating the 18-inch-

thick protective cover layer (See Figure 4). The additional vegetative cover will not exceed the permitted landfill height since the landfill closed in advance of achieving permitted waste grades.

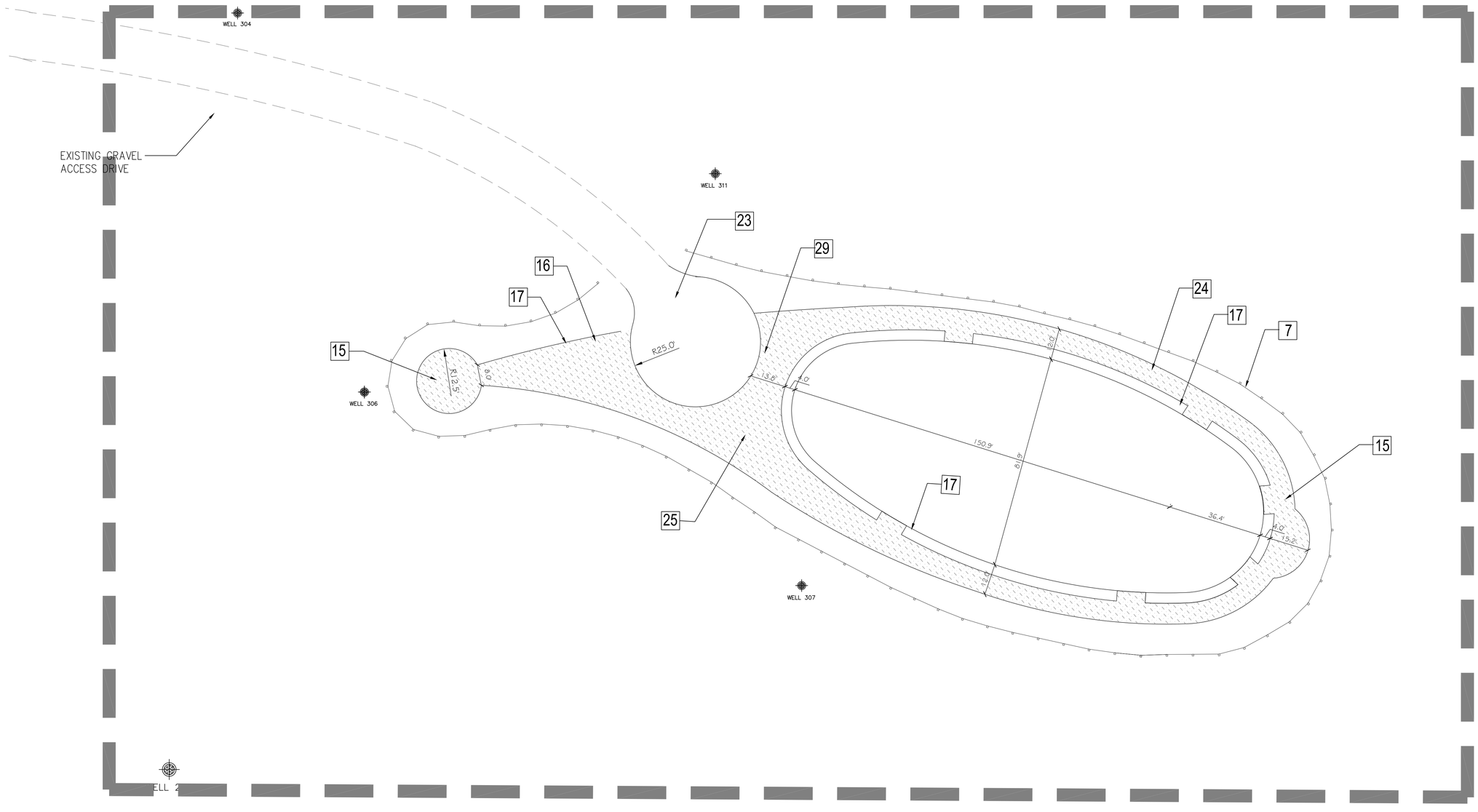

SITE IMPROVEMENT NOTES:

1. 8' WIDE ASPHALT TRAIL PER DETAIL 7/LA-22 & 1/LA-22.
2. CONCRETE WALK / PAVING PER DETAIL 2/LA-22.
3. ASPHALT PAVING PER DETAIL 1/LA-22.
4. WHEEL STOP - SEE SITE AMENITIES SCHEDULE SHEET LA-1. INSTALL PER MANUFACTURERS SPECIFICATION AND PER DETAIL 4/LA-21.
5. HANDICAP PARKING SIGN PER DETAIL 1/LA-21.
6. HANDICAP PARKING SPACES PER DETAIL 2/LA-21.
7. GUIDE RAIL PER DETAIL 7/LA-21.
8. SEE ALTERNATES ON SHEET LA-2.
9. BRIDGE ABUTMENTS & FOUNDATIONS - REFERENCE ENGINEER DRAWINGS, SHEETS S-1, S-2, S-3, LA-25.
10. PRE-FABRICATED STEEL BRIDGE (TOTAL QTY: 3) BY CONTECH BRIDGE SOLUTIONS, OR APPROVED EQUAL. PEDESTRIAN BRIDGE, PONY TRUSS, CONCRETE DECKING, VERTICAL PICKETS IN WEATHERING STEEL. DIMENSIONS AS FOLLOWS:
    10a. 8' wide X 40' long
    10b. 8' wide X 26' long
    10c. 8' wide X 50' long
11. RELOCATED FENCE. REPLACE WITH NEW AS NEEDED PER DETAIL 4/LA-23.
12. 10' WIDE DOUBLE SWING GATE PER DETAIL 3/LA-23.
13. PICNIC TABLES - SEE SITE AMENITIES SCHEDULE SHEET LA-1. INSTALL PER MANUFACTURERS SPECIFICATIONS ON CONCRETE PAD PER DETAIL 2/LA-22.
14. ACCESSIBLE PICNIC TABLE - SEE SITE AMENITIES SCHEDULE SHEET LA-1. INSTALL PER MANUFACTURERS SPECIFICATIONS.
15. BENCHES - SEE SITE AMENITIES SCHEDULE SHEET LA-1. INSTALL PER MANUFACTURERS SPECIFICATIONS. LANDSCAPE ARCHITECT TO FIELD LOCATE.
16. BIKE RACK - SEE SITE AMENITIES SCHEDULE SHEET LA-1. INSTALL PER MANUFACTURERS SPECIFICATIONS.
17. TRASH RECEPTACLE - SEE SITE AMENITIES SCHEDULE SHEET LA-1. INSTALL PER MANUFACTURERS INSTRUCTIONS. ANY TRASH RECEPTACLE SHOWN ON PAVEMENT SHALL BE SURFACE MOUNTED.
18. SHELTER - SEE SITE AMENITIES SCHEDULE SHEET LA-1. INSTALL PER MANUFACTURERS SPECIFICATIONS ON CONCRETE PAD PER DETAILS 2/LA-22 AND 8/LA-22.
19. RESTROOM BUILDING & BENCH - REFERENCE ARCHITECTURAL DRAWINGS.
20. MONITORING WELL TO BE FLUSH MOUNTED PER DETAIL D/D-2.
21. GRAVEL PARKING LOT BY OTHERS.
22. PARK ACCESS GATE PER DETAIL 1/LA-24, 2/LA-24, AND 3/LA-24.
23. GRAVEL TURNAROUND BY OTHERS.
24. AGGREGATE PATH PER DETAIL 5/LA-22.
25. EDUCATIONAL SIGNAGE BY OTHERS. LOCATION TO BE DETERMINED IN FIELD.
26. RETAINING WALL PER DETAIL 2/LA-23. REFERENCE SHEETS LA-12, LA-13, LA-16 FOR WALL ELEVATIONS.
27. GRILL - SEE SITE AMENITIES SCHEDULE SHEET LA-1. INSTALL PER MANUFACTURERS SPECIFICATIONS ON CRUSHED STONE PAD PER DETAIL 8/LA-21.
28. COLLAPSIBLE BOLLARD - SEE SITE AMENITIES SCHEDULE SHEET LA-1. INSTALL PER MANUFACTURERS SPECIFICATIONS.
29. BOULDERS - CONTRACTOR TO SUPPLY BOULDERS WITH MIN. 3' DIAMETER.
30. CONCRETE CURB AND GUTTER PER DETAIL 3/LA-22.
31. RECYCLING RECEPTACLE - SEE SITE AMENITIES SCHEDULE SHEET LA-1. INSTALL PER MANUFACTURERS SPECIFICATIONS ON CONCRETE PAD PER DETAIL 2/LA-22.
32. DRINKING FOUNTAIN - SEE SITE AMENITIES SCHEDULE SHEET LA-1. INSTALL PER MANUFACTURERS SPECIFICATIONS.
33. SPEED BUMP - SEE SITE AMENITIES SCHEDULE SHEET LA-1. INSTALL PER MANUFACTURERS SPECIFICATIONS. TOTAL LOCATIONS (3).
34. WIPE DOWN CURB PER DETAIL 5/LA-21.
35. CROSSWALK PER DETAIL 3/LA-21.
36. CONCRETE BRIDGE APPROACH PER DETAIL 2/LA-22
37. TURFSTONE PAVING PER DETAIL 4/LA-24 AND 5/LA-24. FILL VOIDS WITH CRUSHED STONE.
38. METAL GATE AND TRAIL BOLLARD PER DETAIL 1/LA-23.
39. ASPHALT / CONCRETE CONNECTION PER DETAIL 4/LA-22.
40. PAINTED CENTERLINE - 4" WIDE, YELLOW THERMOPLASTIC FROM GATE TO GATE.
41. PAINTED STOP BAR - 18" WIDE, WHITE THERMOPLASTIC.

LAYOUT PLAN

20 10 0 20 30 40

obs
landscape architects
land planners

306/200 Parham Street
Suite B
Raleigh, NC 27601
919.755.0046

NORTH WAKE LANDFILL PARK PHASE ONE

9000 DEPONIE DRIVE
RALEIGH,NC

WAKE COUNTY
FACILITIES DESIGN
AND CONSTRUCTION

Consultants

Professional Seals

NORTH CAROLINA REGISTERED LANDSCAPE ARCHITECT C-110 OBS LANDSCAPE ARCHITECTS

NORTH CAROLINA REGISTERED LANDSCAPE ARCHITECT 549 BRIAN H. STARKEY

Revisions

No.	Description	Date

Date Issued:	03/03/09
Scale	1"=20'
Drawn by:	NMY/LT
Checked by:	BHS
Sheet No.	

LA-9

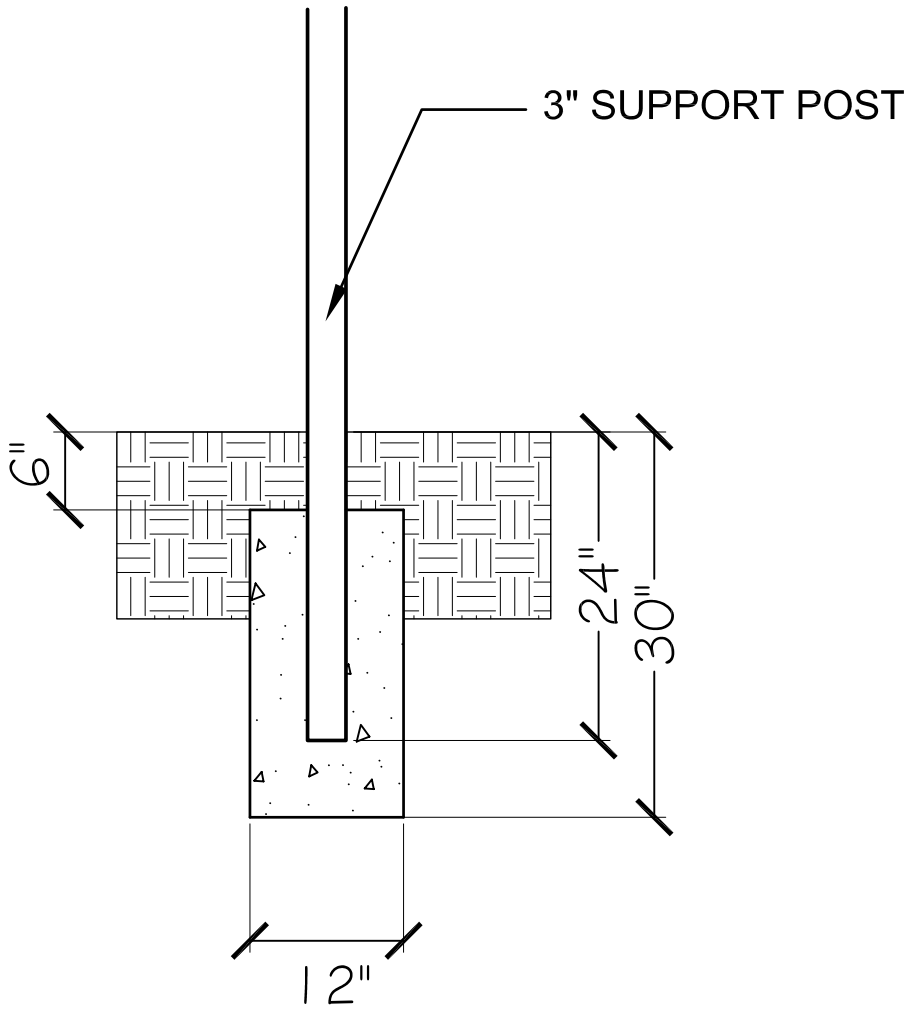

FIGURE 3

landscape architects
land planners

306/200 Parham Street
Suite B
Raleigh, NC 27601
919.755.0046

PROJECT: North Wake Landfill Park, Wake County

Bench - Support Post Embedment Detail

Scale: NTS 04.23.09

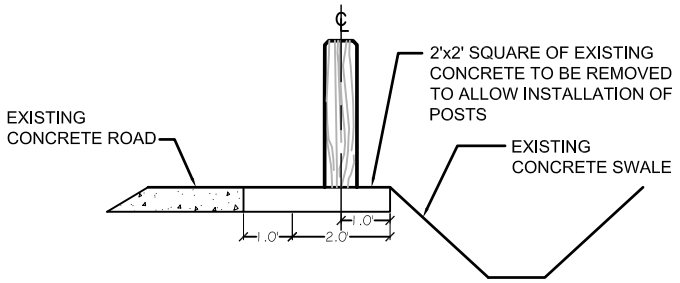

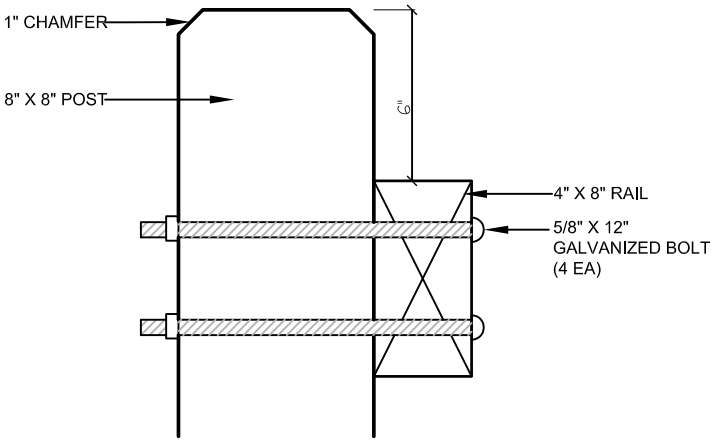

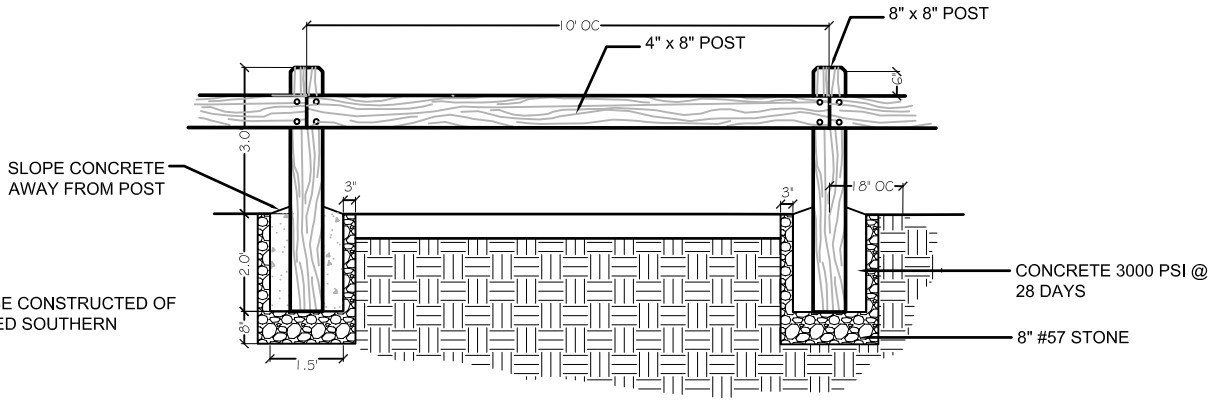

NOTES:

1. GUIDE RAIL IS TO BE CONSTRUCTED OF PRESSURE TREATED SOUTHERN YELLOW PINE.

FIGURE 4

landscape architects
land planners

306/200 Parham Street
Suite B
Raleigh, NC 27601
919.755.0046

PROJECT: North Wake Landfill Park, Wake County

Guiderail Detail

Scale: NTS 04.23.09

2.2 Maintenance and Monitoring Activities

Post-closure maintenance and monitoring activities for the North Wake Subtitle D Landfill will include the following activities:

2.2.1 Final Cover (Cap) System

Inspection of the closure cap will take place quarterly. The inspection will consist of a field survey of the entire closure cap. Items of concern to be noted by the inspector will include but are not limited to: signs of erosion (ruts, sediment deposits, etc.), patches of stressed or dead vegetation, animal burrows, recessed areas or ponding, upheaving, leachate seepage stains and/or flowing leachate, cracks in the cap, damaged gas vents and tree saplings (especially species with tap roots).

Following each inspection, a summary report of the condition of the cap and the items of concern shall be recorded in the post-closure logbook for the facility. Areas that require further attention shall be photographed and delineated on a map of the facility. These items will also be entered in the logbook. Since post-closure inspection personnel will most likely change during the post-closure period, the post-closure logbook shall be kept in a standardized format that allows for new inspection personnel to easily review the results of past post-closure inspections of the site and to make new entries during quarterly inspections.

Action shall be taken immediately to address any items of concern identified during each quarterly inspection. Obvious repair items shall be performed under the supervision of the post-closure maintenance manager. If an item of concern requires further study to determine a course of action, the engineer responsible for closure design shall be contacted for consultation.

Maintenance required for the closure cap is minimal. The vegetative cover will be mowed at least twice a year to suppress weed and brush growth. If vegetative cover is not adequate in any particular area, fertilizer will be applied and the area re-seeded in order to re-establish growth. Animal burrows and eroded or depressed areas shall be filled in with compacted soil and reseeded.

2.2.2 Leachate Collection System

The post-closure leachate collection system will consist of leachate collection lines, leachate header lines, leachate cleanouts, the leachate gravity main and the leachate sampling station. The leachate storage pond, which is part of the operational leachate collection system, was decommissioned during the Phase 2 Closure project. The leachate storage pond decommissioning plan and approach is provided in Appendix A.

Inspection of the accessible items of the leachate collection system (i.e. clean-outs, manholes and pump station) will be made on a quarterly basis.

The sump pump flow meter vault shall be inspected each quarter by a qualified inspector who is knowledgeable in the operation of sump pump flow meters. The inspector shall manually operate each pump to ensure that they are working properly. The flow meter calibration shall be checked quarterly and scheduled for recalibration, as needed. Flow meter records shall be monitored and placed in the post-closure logbook. A summary report as to the condition of the sump pump and metering facilities shall be recorded in the post-closure logbook along with photographs of any items of concern.

The clean-outs shall also be inspected for damage on a quarterly basis. The protruding portion of each clean-out shall be checked for damage. If problems with the leachate collection system are discovered, assessment and then repairs (if needed) shall begin immediately.

All piping of the leachate collection system will be cleaned, by means of high pressure water jet on or before January 2010 and every year thereafter for a minimum of five years. At which time the frequency may be re-evaluated by NCDENR SWS. In addition, camera inspection of all lines will be performed during the initial cleaning service and every three years for a minimum of five years, but more often when obstructions within the lines are detected.

To prevent public access to the leachate clean-outs or sumps they will be secured by flanged end caps or by manhole covers respectively.

2.2.3 Groundwater Monitoring Wells

Inspection of the ground water monitoring wells will take place semi-annually during scheduled sampling events. The inspection will consist of verifying the condition of the monitoring wells to ensure that no damage has occurred and that representative ground water samples can be collected. The inspector should note the following:

1) The total depth of the well shall be recorded every time a water sample is collected or a water level reading is taken to check if sediment has accumulated at the bottom of the well or if the well has been damaged. If sediment build-up has occurred, the sediment shall be removed by pumping or bailing.

2) If turbid samples are collected from a well, redevelopment of the well will be performed.

3) The above-ground protective casing shall be inspected for damage. The protective casing, including the concrete base, shall be structurally sound and free of any damage or corrosion. The lockable cover and lock shall also be checked at this time. Locks will be replaced as needed to maintain security.

4) The surface seals shall be inspected for settling and cracking. If the seal is damaged in any way, the seal will be replaced.

5) Well casings shall also be inspected. Well casings shall be structurally sound and free of any cracks.

6) The condition of the ground water monitoring system shall be recorded in the post-closure logbook following each sampling event. Monitoring of the groundwater wells shall be conducted as described in the groundwater-monitoring plan.

Drawing LA-2 provides locations of all the groundwater monitoring wells located around the North Wake Landfill. Groundwater monitoring wells located within areas accessible to the public are protected by existing bollards with the exception of two wells. These monitoring wells are identified on Drawing LA-2, and will be flush mounted as detailed in Figure 1 to provided added protection.

2.2.4 Surface Water Monitoring

Surface water monitoring will continue to occur semi-annually for the duration of the post closure period in accordance with the previously approved Water Quality Monitoring Plan included as part of the North Wake Landfill – Phase II Permit Renewal Application. The Water Quality Monitoring Plan has been included as part of this Post-Closure Permit Modification in Appendix C. Drawing LA-2 provides locations of all the surface water monitoring locations in the Phase I boundaries of the North Wake Landfill Park

2.2.5 Landfill Gas Monitoring and Control System

Operation and maintenance of the landfill gas collection system at the North Wake Landfill is currently being performed by Wake Gas Producers, Inc. under contract with Wake County Solid Waste Management. Wake Gas Producers shall also be responsible for any upgrades to the system to include servicing or replacement of any collection system component (e.g. blower/vacuum, flare station, individual wellheads, condensate sumps, etc.). Wake Gas Producers will also be responsible for adjusting the gas collection system to maintain gas quality for sale to neighboring Mallinckrodt Pharmaceuticals. Wake County will, however, be responsible for maintaining the perimeter LFG migration control system at the closed (unlined) North Wake landfill, as well as monitoring and adjusting the perimeter system to control offsite migration. Permanent gas monitoring wells have been installed at the landfill property boundary to monitor for migration, both for the unlined and Subtitle D landfills.

Inspection of the landfill gas monitoring and control system will continue to take place on a quarterly basis and include monitoring of any temporary or permanent structures onsite. The quarterly inspection shall also verify the condition of the monitoring wells and their protective casings, concrete bases and locks, as well as monitor the perimeter of the landfill for offsite migration and conduct quarterly

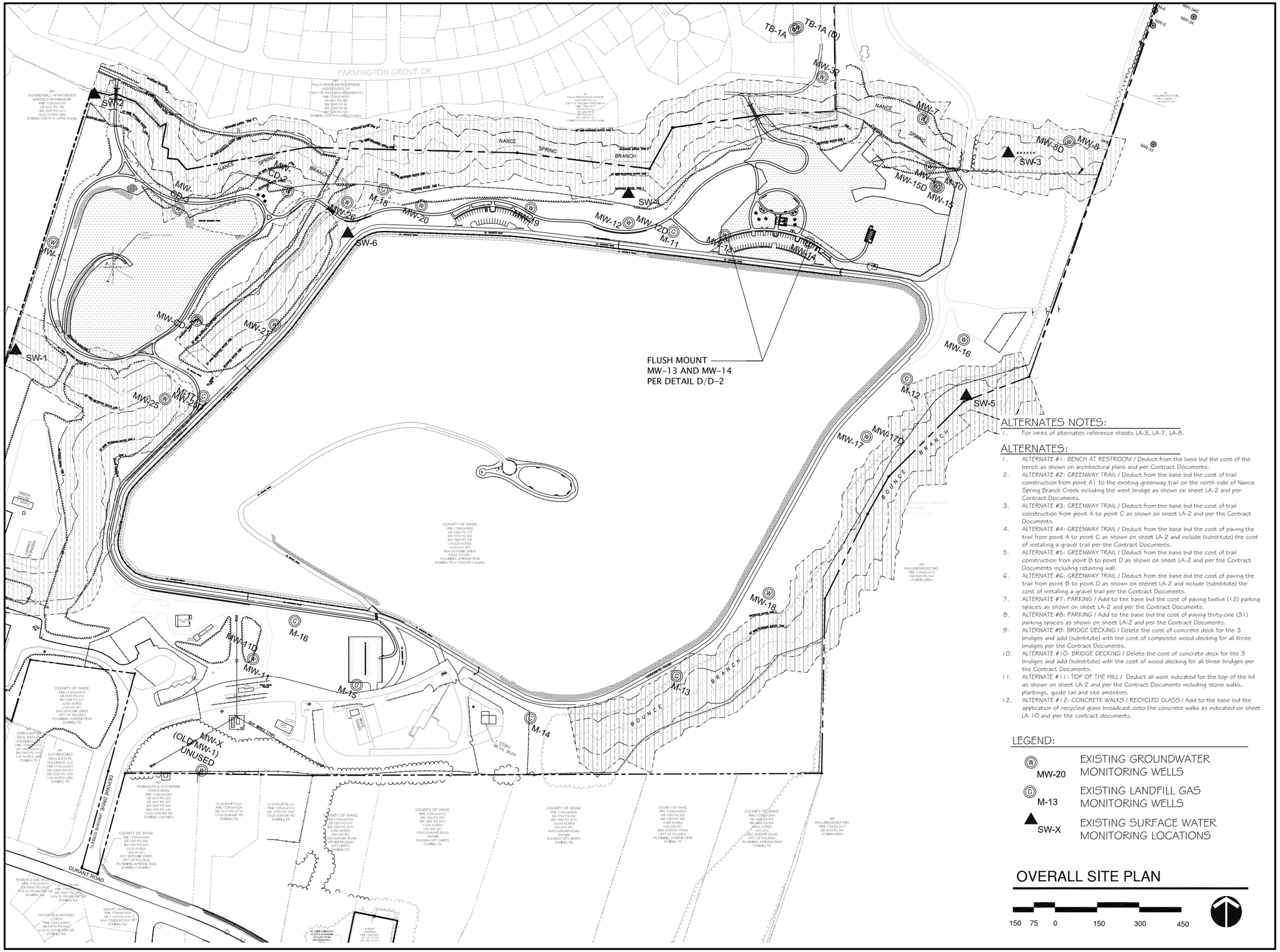

ALTERNATES NOTES:

1. For limits of alternates reference sheets LA-3, LA-7, LA-8.

ALTERNATES:

1. ALTERNATE #1: BENCH AT RESTROOM / Deduct from the base bid the cost of the bench as shown on architectural plans and per Contract Documents.
2. ALTERNATE #2: GREENWAY TRAIL / Deduct from the base bid the cost of trail construction from point A1 to the existing greenway trail on the north side of Nance Spring Branch Creek including the west bridge as shown on sheet LA-2 and per Contract Documents.
3. ALTERNATE #3: GREENWAY TRAIL / Deduct from the base bid the cost of trail construction from point A to point C as shown on sheet LA-2 and per the Contract Documents.
4. ALTERNATE #4: GREENWAY TRAIL / Deduct from the base bid the cost of paving the trail from point A to point C as shown on sheet LA-2 and include (substitute) the cost of installing a gravel trail per the Contract Documents.
5. ALTERNATE #5: GREENWAY TRAIL / Deduct from the base bid the cost of trail construction from point B to point D as shown on sheet LA-2 and per the Contract Documents including retaining wall.
6. ALTERNATE #6: GREENWAY TRAIL / Deduct from the base bid the cost of paving the trail from point B to point D as shown on sheeet LA-2 and include (substitute) the cost of installing a gravel trail per the Contract Documents.
7. ALTERNATE #7: PARKING / Add to the base bid the cost of paving twelve (12) parking spaces as shown on sheet LA-2 and per the Contract Documents.
8. ALTERNATE #8: PARKING / Add to the base bid the cost of paving thirty-one (31) parking spaces as shown on sheet LA-2 and per the Contract Documents.
9. ALTERNATE #9: BRIDGE DECKING / Delete the cost of concrete deck for the 3 bridges and add (substitute) with the cost of composite wood decking for all three bridges per the Contract Documents.
10. ALTERNATE #10: BRIDGE DECKING / Delete the cost of concrete deck for the 3 bridges and add (substitute) with the cost of wood decking for all three bridges per the Contract Documents.
11. ALTERNATE #11: TOP OF THE HILL / Deduct all work indicated for the top of the hill as shown on sheet LA-2 and per the Contract Documents including stone walks, plantings, guide rail and site amenities.
12. ALTERNATE #12: CONCRETE WALKS / RECYCLED GLASS / Add to the base bid the application of recycled glass broadcast onto the concrete walks as indicated on sheet LA-10 and per the contract documents.

LEGEND:

MW-20	EXISTING GROUNDWATER MONITORING WELLS
M-13	EXISTING LANDFILL GAS MONITORING WELLS
SW-X	EXISTING SURFACE WATER MONITORING LOCATIONS

OVERALL SITE PLAN

150 75 0 150 300 450

obs
landscape architects
land planners

306/200 Parham Street
Suite B
Raleigh, NC 27601
919.755.0046

NORTH WAKE LANDFILL PARK PHASE ONE

9000 DEPONIE DRIVE
RALEIGH,NC

WAKE COUNTY
FACILITIES DESIGN
AND CONSTRUCTION

Consultants

Professional Seals

Revisions

No.	Description	Date

Date Issued:	03/03/09
Scale	1"=150'
Drawn by:	NMY/LT
Checked by:	BHS
Sheet No.	

LA-2

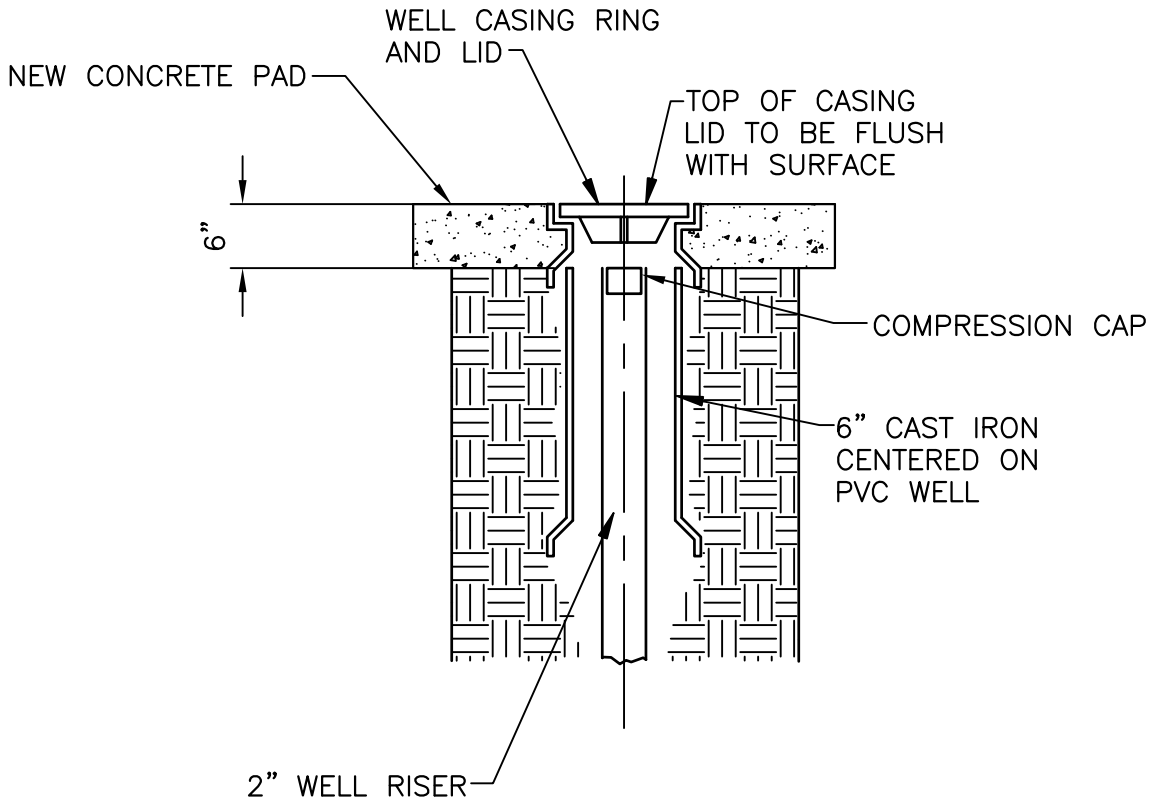

FLUSH MOUNTED MONITORING WELL

DETAIL D

NTS –

NOTE:

1. REMOVE STEEL CASING AND ASSOCIATED CONCRETE PAD
2. INSTALL NEW FLUSH MOUNTED CASING AND PAD
3. REMOVE EXISTING COMPRESSION CAP
4. CUT 2" WELL RISER TO 6" BELOW GRADE
5. REINSTALL COMPRESSION CAP
6. INSTALL WATERTIGHT BOLTED LID

	DATE 04–22–09			FIGURE NO.
		SHEET NO.		
CDM Camp Dresser & McKee		D–2		FIG 1

sweeps of each landfill for landfill gas emissions. A summary of each inspection shall be recorded in the post-closure logbook along with photographs of any items of concern.

Monitoring of the gas monitoring wells and onsite buildings shall be conducted as described in the monitoring plan provided in Appendix B – Landfill Gas Control Plan. Additionally the foundation of the restroom facility will be vented per Sheet BD 001 and BD 002 located at the end of Appendix B.

Gas monitoring wells found to be in need of repair or replacement will be repaired or replaced immediately.

The gas migration control system, currently in place around the perimeter of the closed (unlined) North Wake landfill, will not be accessible to the public during this phase of the reuse project. Protection of the gas wells adjacent to the loop road on the top of the Subtitle D landfill and along pedestrian walkways to the top of the landfill will be protected by either fencing or signage. Additional protection will be installed if deemed necessary (e.g. wellhead locking devices, below grade vaults w/locking covers).

2.2.6 Erosion and Sedimentation Control System

The post-closure erosion and sedimentation control system for the Subtitle D landfill will include stormwater diversion berms and downdrains located on the landfill cap surface; the perimeter drainage ditch and sedimentation basins. Three sedimentation basins will be operational at the beginning of the post-closure period. As park development expands, removal of the sedimentation basins is proposed, since the site will be stabilized.

Concentrated flows resulting from the removal of the sedimentation basins will be diffused using appropriate measures designed for the 10-year, 24-hour design storm event.

Additional features, including bio-retention basins will be utilized as necessary to help control runoff from impervious areas. The design of the bio-retention basins and other features will meet all applicable local, State and Federal guidelines for stormwater control.

Inspection of the erosion and sedimentation control system shall occur semi-annually and after storm events exceeding 1-inch of precipitation. During each inspection, the elements of the system including ditches, pipes, ponds, and inlet/outlet structures will be checked for obstructions and damage. Ditches and diversion berms shall be inspected for erosion of the side slopes, loss of vegetative cover, shifting of riprap, excessive buildup of sediment, or any other condition that may prevent proper functioning. Drainage piping shall be checked for obstructions and the inlets/outlets inspected for undercutting. The sediment levels shall be monitored to determine if sediment removal is required. The condition of all dissipation devices and outfalls

will also be observed for excessive erosion and/or deterioration. Following each inspection, a summary report will be entered in the post-closure logbook along with photographs of any items of concern.

Maintenance and/or repairs should be performed as prescribed by the inspectors review.

2.2.8 Certification of Post-Closure

Every 5 years, a certification verifying that post-closure care was performed in accordance with the post-closure plan and signed by a Professional Engineer licensed in the State of North Carolinawill be made part of the operating record. The County will notify the SWS when each certification has been placed in the operating record.

2.2.9 Name of Individual Responsible for Post-Closure Maintenance of the Site

Mr. David Cooke, County Manager, or his designee will be responsible for operations and maintenance of the site during the post-closure period. Mr. Cooke can be reached at the following address:

David Cooke
County Manager
Wake County
336 Fayetteville Street Mall
Raleigh, NC 27602

Mr. Cooke most likely will not be employed with Wake County throughout the entire 30-year post-closure period. A new individual will be appointed at the time Mr. Cooke's employment with the County ends.

2.3 Financial Assurance

Wake County will submit a financial assurance package to SWS in accordance with the criteria set forth under Rule .1628. A detailed cost estimate for post-closure care has been prepared and is provided herein and a copy has been placed in the operating record. The cost estimate is based on 30 years of post-closure care. Each year, the estimate will be adjusted for inflation and any changes to the activities of post-closure care.

Table 2
Post Closure Cost Estimate
North Wake Subtitle D Landfill
Wake County, North Carolina

	Unit Price	Unit	Quantity	Total
Administration	$7,980.00	Yr.	30	$239,400
Monitoring				
20 Groundwater Wells Sampled and Analyzed bi-annually for 30 years	$960.00	Ea.	1,200	$1,152,000
4 Surface Water Locations Sampled and Analyzed bi-annually for 30 years	$720.00	Ea.	240	$172,800
14 Landfill Gas Wells Sampled and Analyzed Quarterly for 30 years	$240.00	Ea.	1,680	$403,200
Maintenance				
Fencing, Gates, Signs, etc.	$600.00	Yr.	30	$18,000
Access Roads	$2,400.00	Yr.	30	$72,000
Mowing	$3,600.00	Yr.	30	$108,000
Stormwater Structures	$3,600.00	Yr.	30	$108,000
Leachate Collection and Storage System	$15,000.00	Yr.	30	$450,000
Final Cover System	$18,000.00	Yr.	30	$540,000
Groundwater and Gas Monitoring Wells	$3,500.00	Yr.	30	$105,000
Leachate Treatment	$30,000.00	Yr.	30	$900,000
Subtotal				$4,122,000
Contingency (15%)				$618,400
Total Post Closure Cost				$4,886,800

APPENDIX A

Appendix A
Leachate Pond Decommissioning

Introduction

The existing leachate storage pond at the North Wake Subtitle D Landfill (landfill) is a lined storage pond used for temporary containment of the leachate generated from the Subtitle D landfill. The leachate storage pond liner system is an impervious liner system that includes from bottom to top:

- a 24-inch-thick compacted clay liner (hydraulic conductivity (k_v) $\leq 1 \times 10^{-7}$ centimeters per second (cm/sec));
- a 60-mil high density polyethylene (HDPE) geomembrane; and
- a concrete fabric formed lined protective layer.

Leachate from the leachate storage pond gravity drains into a leachate pump station west of the existing leachate storage pond, which discharges into the City of Raleigh Sanitary Sewer System as allowed under Permit No. NC0029033 (**See Attachment 1**). As permitted, Wake County is allowed to discharge at a rate up to 125,000 gallons per day (gpd) to the City of Raleigh Sanitary Sewer System provided that pH is between 6.0 and 10.0 standard units and the sum of total toxic organic compounds (TTO) with detected concentrations greater than .01 mg/L is less than 2.13 mg/L.

Completion of the North Wake Landfill closure will eliminate stormwater infiltration, consequently reducing leachate generation and eliminating the need for future onsite leachate storage. For this reason, the leachate storage pond is proposed for decommissioning under the current Phase 2 closure contract. The decommissioning of the pond under the current contract will allow disposal of debris generated from the decommissioning of the leachate storage pond within the landfill.

Leachate Data and Calculations

Quantity Validation

Since the proposed plan is to decommission the leachate storage pond under the current Phase 2 closure contract prior to complete closure of the landfill, the leachate generation rates were modeled for waste depths at the time of closure and prior to installation of the cover cap system. Using the US EPA HELP Model 3.07 the North Wake Subtitle D Landfill was modeled to estimate the peak daily and average annual leachate generation rates at the time of closure. The HELP Model results included in **Attachment No. 2** estimate that the average and peak daily leachate generation rates are 122.5 and 710 gallons per acre per day (gpad), respectively.

With a lined footprint of approximately 67 acres, the resulting average and peak daily leachate discharge rates for the landfill at closure are 8,210 and 47,570 gpd

respectively. These rates are well below the maximum permitted discharge rate of 125,000 gpd.

To validate the HELP Model Results and provide further justification that removal of the leachate storage pond is appropriate, data from Cells 1 and 2 of the Delaware Solid Waste Authority's (DSWA's) Southern Solid Waste Management Center (SSWMC) has been provided for comparison. The data was selected as a comparison data set because the DSWA maintains complete records of leachate flow from individual landfill cells; Cells 1 and 2 are Subtitle D lined cells closed in 1997 using an exposed geomembrane; and the average annual precipitation for Raleigh, North Carolina, and Georgetown, Delaware are similar at 42.46 inches and 43.36 inches per year respectively. The similarity in annual precipitation supports selecting the DSWA SSWMC Cells 1 and 2 for comparison because precipitation is the main component in leachate generation.

Figure A-1 shows a line graph of leachate flow from the SSWMC Cells 1 and 2 at the time of closure through November, 2006. As shown, the maximum average daily flow rate occurs near the closure date and is approximately 600 gpad, which is less than the peak daily leachate generation rate of 710 gpad as estimated by the HELP Model results. Review of the complete leachate flow records for Cells 1 and 2 provided in **Attachment 3** shows that the maximum average leachate flow rate for any one month during the life of Cells 1 and 2 is 1,420 gpad. Although not anticipated, if this flow rate were realized at the North Wake Landfill following the decommissioning of the leachate pond, the total flow rate for the landfill would be approximately 95,140 gpd, which is still less than the maximum allowable discharge rate of 125,000 gpd.

Figure A-1
SSWMF Cells 1 and 2 Leachate Flow

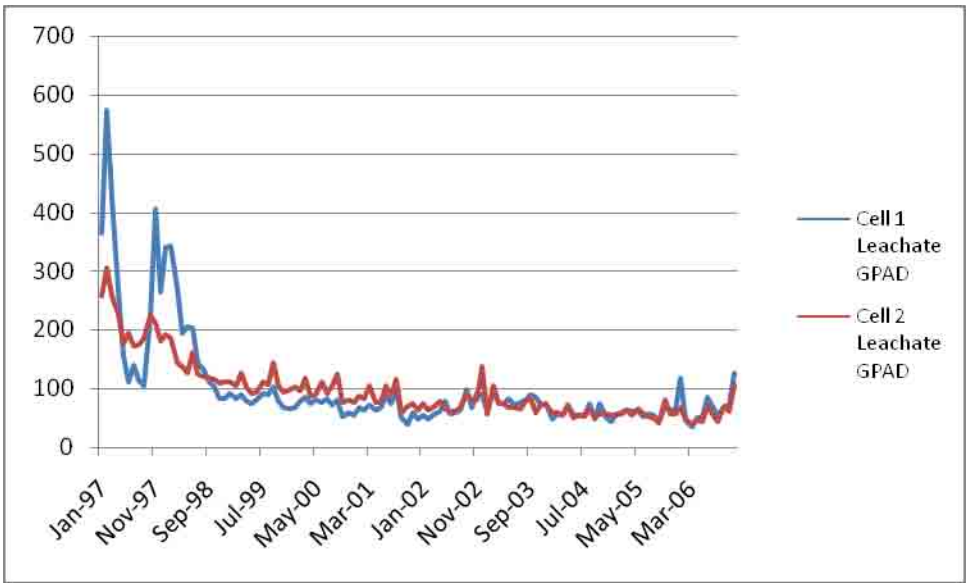

Current monitoring of leachate generation rates indicates that leachate generation rates are significantly below the permitted discharge rate of 125,000 gpd. As shown in **Attachment 4** the average daily discharge rate from December 18, 2006 to October 2, 2008 is 9,690 gallons per day - 12.9 times lower than the permitted discharge rate.

Based on monitoring records from December 18, 2006 to October 2, 2008, the maximum average daily discharge rate occurred during January, 2007. The average daily discharge rate during the January 2007 sampling event was 99,209 gallons per day. Of the other 9 recorded sampling events from December 18, 2006 to October 2, 2008, 8 of the 9 events generated an average daily discharge rate less than one-half of the maximum average daily discharge rate of 99,209 gallons per day. The one exception was during August 2007, when an average daily discharge rate of 63,408 gallons per day was observed.

As the area of the impermeable cover cap system is increased through the ongoing closure project leachate generation potential is constantly decreasing. As a result, anticipated discharge rates should further decrease from the observed discharge rates presented in **Attachment 4**.

Quality Validation

As indicated above, leachate discharged from the landfill is required to have a pH between 6.0 and 10.0 standard units and the sum of TTOs with detected concentrations greater than .01 mg/L, must be less than 2.13 mg/L. The historical leachate quality data has not exceeded these conditions to date and based on the nature of leachate, the leachate quality is not expected to fall outside of the limits following landfill closure.

The pH of leachate varies with age of the waste. Leachate pH drops during the acid formation phase of anaerobic decomposition which typically occurs within the first year and then increases during the methane formation phase until it stabilizes in a range between 6 and 8. Since no new waste is being placed in the landfill it is reasonable to assume that the pH will remain within the required limits for discharge to the City of Raleigh Sanitary Sewer System.

The TTOs are not expected to vary significantly from the historical data. Therefore, an exceedance in TTOs is not expected.

Sampling and Analysis Plan

In preparation for the decommissioning of the existing leachate storage pond, the following sampling plan has been developed to determine if any contamination has occurred below the leachate storage pond liner.

First, the leachate storage pond will be drained and a bypass pumping system will be installed to divert leachate around the pond and into the leachate pump station west of the leachate storage pond. Then, three cored samples will be extracted from the leachate pond liner system. The concrete and geomembrane components will be

visually inspected and a written summary of the visual inspection will be provided in the final sampling report. The clay liner will be analyzed for North Carolina Appendix II Total Volatile Organic Compounds (VOCs) by EPA Method 8260, Total Semi Volatile Organic Compounds (SVOCs) by EPA Method 8270, Polychlorinated biphenyls (PCBs) by EPA Method 8082, Pesticides by EPA Method 8081, Herbicides by EPA Method 8151, and Total Metals by EPA Method 6010 and Mercury by EPA Method 7470. All analytical results will be included in the final sampling report.

If the analytical results do not detect contaminant concentrations greater than the respective remediation goals provided in the North Carolina Division of Waste Management Inactive Hazardous Site Branch Health Based Soil Remediation Goals Table, then no further action will be required other than to perforate and breakup the remaining pond liner in place, as described below.

If analytical results indicate concentrations of contaminants higher than the respective remediation goal, the concrete and geomembrane liners will be completely removed and properly disposed of within the landfill. Upon removal of the concrete and geomembrane liners, the vertical and horizontal contamination limits in the underlying clay and subgrade soils will be delineated through visual and analytical techniques.

Leachate Storage Pond Decommissioning Plan

Prior to decommissioning the leachate storage pond, the landfill's leachate collection system will be connected to City of Raleigh sanitary sewer, north of the leachate pond. The leachate pump station west of the existing leachate storage pond will be decommissioned and a gravity system will be installed immediately downstream of the existing solid 10-inch HDPE header pipe exiting the landfill as shown in Figure A-2. An HDPE lined concrete manhole will be connected to the existing 10-inch HDPE header discharging from the landfill to allow flow monitoring and sampling of the leachate prior to discharging into the City of Raleigh sanitary sewer. This sampling system will provide means to extract a 24-hour composite sample in compliance with the City of Raleigh user permit for discharge to the sanitary sewer system. A 2-inch connection from the gas condensate line directly to the manhole will also be installed to allow the condensate from the gas collection system to first discharge into the wet well and then to the pump station.

Based on results of the pond liner system analysis the pond will be decommissioned in one of two ways. If analysis indicates that no contaminants are present in the clay liner, then the concrete lined surface of the leachate storage pond will be cleaned to remove all traces of waste. The cleaned fabric formed concrete liner and the geomembrane and clay liners will be penetrated multiple times along the pond bottom to promote drainage through the leachate storage pond bottom. The liner penetrations will be filled with common fill and the leachate storage pond will be backfilled to grade, and sloped to provide a natural drainage pattern for surface runoff. In addition, approximately five feet of the fabric formed concrete and underlying geomembrane and clay liners will be removed from the rim of the leachate

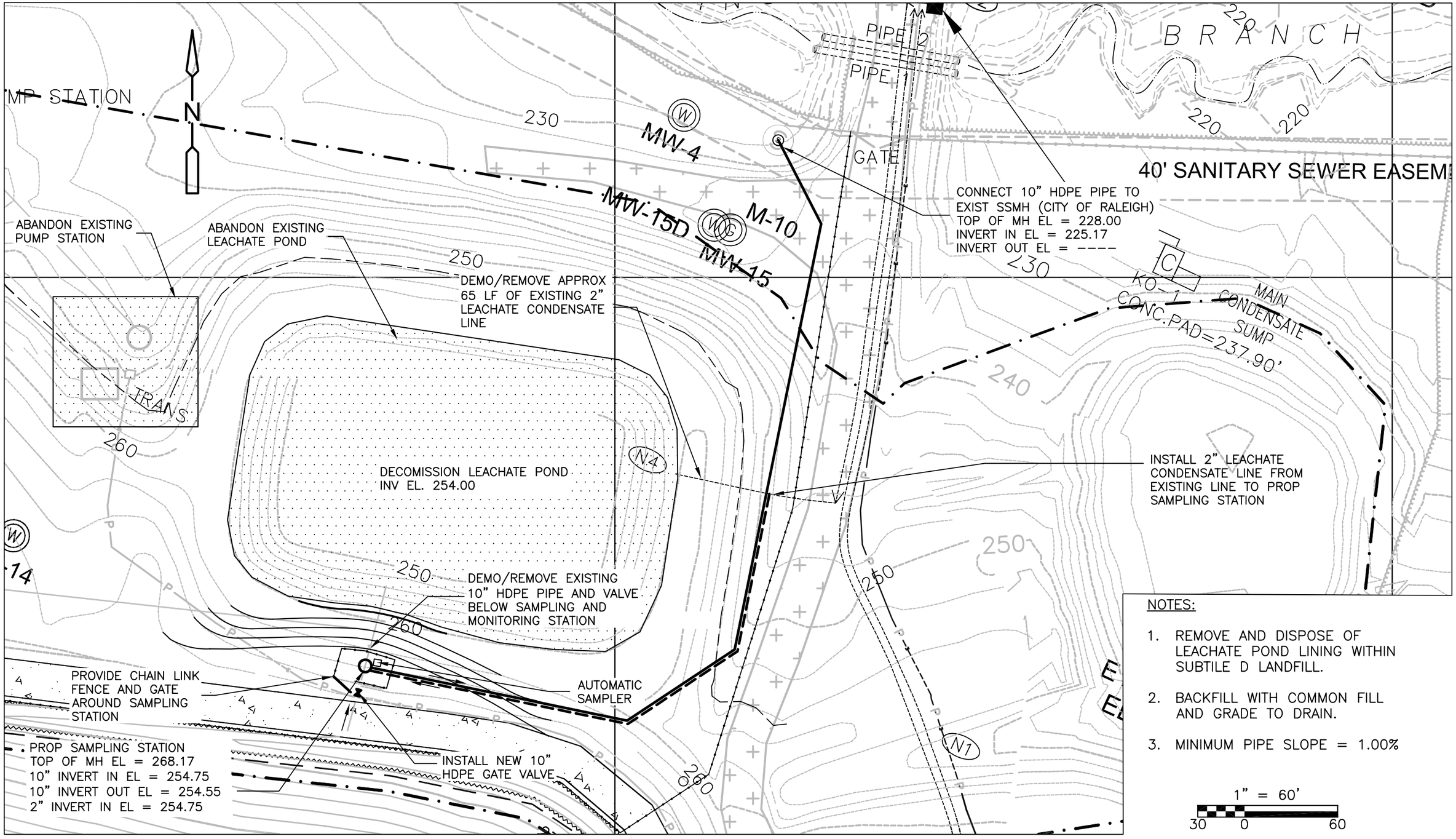

NOTES:

1. REMOVE AND DISPOSE OF LEACHATE POND LINING WITHIN SUBTILE D LANDFILL.
2. BACKFILL WITH COMMON FILL AND GRADE TO DRAIN.
3. MINIMUM PIPE SLOPE = 1.00%

CDM

DATE 10-28-2008

FIGURE NO.

A-2

PERMIT SET ONLY

storage pond along the entire pond perimeter to promote lateral migration of stormwater infiltration and prevent saturation of the surface materials.

If contaminants are present in the clay liner, the fabric formed concrete and geomembrane liner system will be completely removed and properly disposed of within the landfill. As previously discussed in the sampling plan, the vertical and horizontal contamination limits in the underlying clay and subgrade soils will be delineated through visual and analytical techniques and the contaminated soils then removed and disposed of within the landfill. The vertical and horizontal contamination limits will be recorded and provided in the final sampling report.

Historical Groundwater Monitoring Data

Monitoring wells MW-15 and MW-15d are directly down-gradient of the leachate storage pond (see Figure A-3). Table 3 A-D in **Attachment 5** provides groundwater quality for the entire site. As shown on Table 3A in **Attachment 5**, wells MW-15 and MW-15d have had historic detections of metals. These concentrations are similar to those in the background wells for the site (MW-11 and MW-11d) and for most of the other compliance wells. Statistical analyses continually indicate that metals detections in the compliance wells at the North Wake Subtitle D Landfill are not significant and are, therefore, naturally occurring at the site.

In addition, samples across the site - including the background wells - have had very low-level (estimated) detections of VOCs. A review of the VOC compounds and concentrations indicates that the detections are mostly common laboratory contaminants and not indicative of landfill releases.

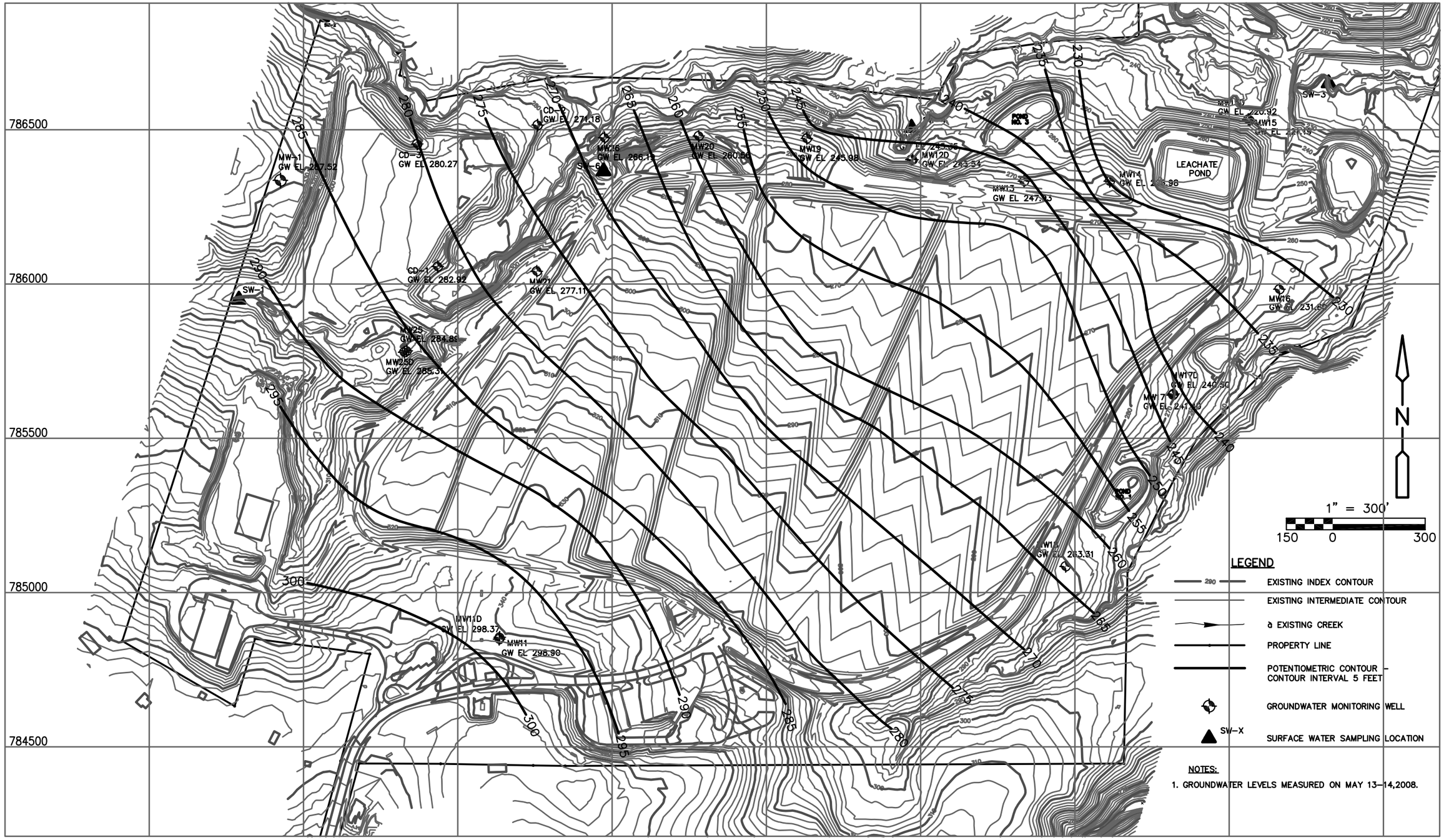

CDM Camp Dresser & McKee

Figure A–3
NORTH WAKE LINED LANDFILL
POTENTIOMETRIC CONTOUR MAP

ATTACHMENT 1

City of Raleigh

PERMIT

Industrial User Pretreatment Permit (IUP)
To Discharge Wastewater Under the
Industrial Pretreatment Program

LAND
IUP Number

40 CFR Category

In compliance with the provisions of North Carolina General Statute 143-215.1, any applicable federal categorical pretreatment regulations, all other lawful standards and regulations promulgated and adopted by the North Carolina Environmental Management Commission, and the City of Raleigh Sanitary Sewer Use Ordinance. The following Industry, hereafter referred to by name or as the permittee:

Industry name, permittee:	**Wake County North Wake Landfill**
Facility Located at Street Address	**9004 Deponie Drive**
City	**Raleigh**
State, Zip	**North Carolina 27614**

is hereby authorized to discharge wastewater from the facility located at the above listed address into the sanitary sewer collection system and the wastewater treatment facility of the City of Raleigh listed below:

WWTP name:	**Neuse River Wastewater Treatment Plant**
NPDES Number:	**NC0029033**
WWTP Address:	**P. O. Box 590**
City, State, Zip	**Raleigh, North Carolina, 27602**

in accordance with effluent limitations, monitoring requirements, and all other conditions set forth in Parts I, II, and III of this Industrial User Pretreatment Permit (IUP).

Effective date, this permit and the authorization to discharge shall become effective at midnight on this date:.	**July 1, 2004**
Expiration date, this permit and the authorization to discharge shall expire at midnight on this date:.	**December 31, 2008**

June 17, 2004
Date signed

H. Dale Crisp, Director, Public Utilities

ATTACHMENT 2

```
******************************************************************************
****

******************************************************************************
*****
 **
**
 **
**
 **              HYDROLOGIC EVALUATION OF LANDFILL PERFORMANCE
**
 **                HELP MODEL VERSION 3.07  (1 NOVEMBER 1997)
**
 **                  DEVELOPED BY ENVIRONMENTAL LABORATORY
**
 **                    USAE WATERWAYS EXPERIMENT STATION
**
 **             FOR USEPA RISK REDUCTION ENGINEERING LABORATORY
**
 **
**
 **
**

******************************************************************************
*****

******************************************************************************
*****


 PRECIPITATION DATA FILE:    C:\HELP3\RAL_PREC.D4
 TEMPERATURE DATA FILE:      C:\HELP3\RAL_TEMP.D7
 SOLAR RADIATION DATA FILE:  C:\HELP3\RAL_SOL.D13
 EVAPOTRANSPIRATION DATA:    C:\HELP3\RAL_EVAP.D11
 SOIL AND DESIGN DATA FILE:  C:\HELP3\RAL_SOIL.D10
 OUTPUT DATA FILE:           C:\HELP3\ral\Ral_1.OUT


 TIME:  13:30     DATE:   4/14/2008




******************************************************************************
*****

      TITLE:     Wake County, North Wake Landfill
                 North Wake Subtitle D Landfill
                 Leachate Generation at Closure
```

```
*************************************************************************
*****

      NOTE:  INITIAL MOISTURE CONTENT OF THE LAYERS AND SNOW WATER WERE
               COMPUTED AS NEARLY STEADY-STATE VALUES BY THE PROGRAM.


                                LAYER  1
                                --------

                    TYPE 1 - VERTICAL PERCOLATION LAYER
                        MATERIAL TEXTURE NUMBER   0
            THICKNESS                   =     12.00   INCHES
            POROSITY                    =      0.4570 VOL/VOL
            FIELD CAPACITY              =      0.1310 VOL/VOL
            WILTING POINT               =      0.0580 VOL/VOL
            INITIAL SOIL WATER CONTENT  =      0.2458 VOL/VOL
            EFFECTIVE SAT. HYD. COND.   =  0.999999975000E-04 CM/SEC



                                LAYER  2
                                --------

                    TYPE 1 - VERTICAL PERCOLATION LAYER
                        MATERIAL TEXTURE NUMBER   0
            THICKNESS                   =   2160.00   INCHES
            POROSITY                    =      0.6710 VOL/VOL
            FIELD CAPACITY              =      0.2970 VOL/VOL
            WILTING POINT               =      0.0770 VOL/VOL
            INITIAL SOIL WATER CONTENT  =      0.3015 VOL/VOL
            EFFECTIVE SAT. HYD. COND.   =  0.999999975000E-04 CM/SEC



                                LAYER  3
                                --------

                      TYPE 2 - LATERAL DRAINAGE LAYER
                        MATERIAL TEXTURE NUMBER  21
            THICKNESS                   =     24.00   INCHES
            POROSITY                    =      0.3970 VOL/VOL
            FIELD CAPACITY              =      0.0320 VOL/VOL
            WILTING POINT               =      0.0130 VOL/VOL
            INITIAL SOIL WATER CONTENT  =      0.0434 VOL/VOL
            EFFECTIVE SAT. HYD. COND.   =  0.300000012000     CM/SEC
            SLOPE                       =      5.00   PERCENT
            DRAINAGE LENGTH             =   1300.0    FEET
```

LAYER 4

TYPE 4 - FLEXIBLE MEMBRANE LINER
MATERIAL TEXTURE NUMBER 35

THICKNESS	=	0.06	INCHES
POROSITY	=	0.0000	VOL/VOL
FIELD CAPACITY	=	0.0000	VOL/VOL
WILTING POINT	=	0.0000	VOL/VOL
INITIAL SOIL WATER CONTENT	=	0.0000	VOL/VOL
EFFECTIVE SAT. HYD. COND.	=	0.199999996000E-12	CM/SEC
FML PINHOLE DENSITY	=	0.00	HOLES/ACRE
FML INSTALLATION DEFECTS	=	0.00	HOLES/ACRE
FML PLACEMENT QUALITY	=	1 - PERFECT	

GENERAL DESIGN AND EVAPORATIVE ZONE DATA

NOTE: SCS RUNOFF CURVE NUMBER WAS COMPUTED FROM DEFAULT SOIL DATA BASE USING SOIL TEXTURE # 5 WITH A POOR STAND OF GRASS, A SURFACE SLOPE OF 5.% AND A SLOPE LENGTH OF 200. FEET.

SCS RUNOFF CURVE NUMBER	=	78.10	
FRACTION OF AREA ALLOWING RUNOFF	=	100.0	PERCENT
AREA PROJECTED ON HORIZONTAL PLANE	=	1.000	ACRES
EVAPORATIVE ZONE DEPTH	=	10.0	INCHES
INITIAL WATER IN EVAPORATIVE ZONE	=	2.379	INCHES
UPPER LIMIT OF EVAPORATIVE STORAGE	=	4.570	INCHES
LOWER LIMIT OF EVAPORATIVE STORAGE	=	0.580	INCHES
INITIAL SNOW WATER	=	0.000	INCHES
INITIAL WATER IN LAYER MATERIALS	=	655.189	INCHES
TOTAL INITIAL WATER	=	655.189	INCHES
TOTAL SUBSURFACE INFLOW	=	0.00	INCHES/YEAR

EVAPOTRANSPIRATION AND WEATHER DATA

NOTE: EVAPOTRANSPIRATION DATA WAS OBTAINED FROM RALEIGH NORTH CAROLINA

STATION LATITUDE	=	35.87	DEGREES
MAXIMUM LEAF AREA INDEX	=	0.00	
START OF GROWING SEASON (JULIAN DATE)	=	86	
END OF GROWING SEASON (JULIAN DATE)	=	310	
EVAPORATIVE ZONE DEPTH	=	10.0	INCHES

AVERAGE ANNUAL WIND SPEED = 7.70 MPH
AVERAGE 1ST QUARTER RELATIVE HUMIDITY = 66.00 %
AVERAGE 2ND QUARTER RELATIVE HUMIDITY = 70.00 %
AVERAGE 3RD QUARTER RELATIVE HUMIDITY = 78.00 %
AVERAGE 4TH QUARTER RELATIVE HUMIDITY = 72.00 %

NOTE: PRECIPITATION DATA WAS SYNTHETICALLY GENERATED USING
COEFFICIENTS FOR RALEIGH NORTH CAROLINA

NORMAL MEAN MONTHLY PRECIPITATION (INCHES)

JAN/JUL	FEB/AUG	MAR/SEP	APR/OCT	MAY/NOV	JUN/DEC
3.55	3.43	3.69	2.91	3.67	3.66
4.38	4.44	3.29	2.73	2.87	3.14

NOTE: TEMPERATURE DATA WAS SYNTHETICALLY GENERATED USING
COEFFICIENTS FOR RALEIGH NORTH CAROLINA

NORMAL MEAN MONTHLY TEMPERATURE (DEGREES FAHRENHEIT)

JAN/JUL	FEB/AUG	MAR/SEP	APR/OCT	MAY/NOV	JUN/DEC
39.60	41.60	49.30	59.50	67.20	73.90
77.70	77.00	71.00	59.70	50.00	42.00

NOTE: SOLAR RADIATION DATA WAS SYNTHETICALLY GENERATED USING
COEFFICIENTS FOR RALEIGH NORTH CAROLINA
AND STATION LATITUDE = 35.87 DEGREES

****

AVERAGE MONTHLY VALUES IN INCHES FOR YEARS 1 THROUGH 5

	JAN/JUL	FEB/AUG	MAR/SEP	APR/OCT	MAY/NOV	JUN/DEC
PRECIPITATION						
TOTALS	3.26	2.82	4.37	2.63	3.53	5.42
	4.57	6.26	2.81	3.77	2.52	2.90

```
     STD. DEVIATIONS        2.96     0.95     1.30     1.89     2.64
1.99
                            2.29     5.93     1.69     2.69     1.66
1.28

   RUNOFF
   ------
     TOTALS                 0.223    0.045    0.161    0.004    0.225
0.168
                            0.232    0.817    0.406    0.281    0.029
0.148

     STD. DEVIATIONS        0.397    0.045    0.278    0.005    0.504
0.175
                            0.168    1.693    0.779    0.470    0.041
0.254

   EVAPOTRANSPIRATION
   ------------------
     TOTALS                 1.538    1.959    2.367    2.636    2.882
3.376
                            3.250    2.956    2.037    1.924    1.683
1.268

     STD. DEVIATIONS        0.284    0.297    0.403    1.043    1.201
0.971
                            1.353    1.111    1.036    0.670    0.677
0.165

   LATERAL DRAINAGE COLLECTED FROM LAYER  3
   ----------------------------------------
     TOTALS                 0.1026   0.0798   0.1061   0.1744   0.1131
0.0869
                            0.2672   0.2171   0.1331   0.1143   0.1229
0.1292

     STD. DEVIATIONS        0.0107   0.0535   0.0831   0.2384   0.1720
0.0452
                            0.1323   0.1621   0.0795   0.0981   0.0603
0.1048

   PERCOLATION/LEAKAGE THROUGH LAYER  4
   -------------------------------------
     TOTALS                 0.0000   0.0000   0.0000   0.0000   0.0000
0.0000
                            0.0000   0.0000   0.0000   0.0000   0.0000
0.0000

     STD. DEVIATIONS        0.0000   0.0000   0.0000   0.0000   0.0000
0.0000
                            0.0000   0.0000   0.0000   0.0000   0.0000
0.0000
```

```
 ---------------------------------------------------------------------------
-------
                AVERAGES OF MONTHLY AVERAGED DAILY HEADS (INCHES)
 ---------------------------------------------------------------------------
-------


   DAILY AVERAGE HEAD ON TOP OF LAYER  4
   -------------------------------------
     AVERAGES               0.0507   0.0432   0.0525   0.0891   0.0559
0.0444
                            0.1321   0.1073   0.0680   0.0565   0.0628
0.0639

     STD. DEVIATIONS        0.0053   0.0290   0.0411   0.1218   0.0850
0.0231
                            0.0654   0.0801   0.0406   0.0485   0.0308
0.0518


***************************************************************************
******




***************************************************************************
******

      AVERAGE ANNUAL TOTALS & (STD. DEVIATIONS) FOR YEARS    1 THROUGH
5
 ---------------------------------------------------------------------------
-------
                                       INCHES            CU. FEET
PERCENT
                                 -------------------   -------------   ---
------
  PRECIPITATION                   44.86    (   9.753)     162856.3
100.00

  RUNOFF                           2.739   (  3.1403)       9941.05
6.104

  EVAPOTRANSPIRATION              27.876   (  0.9707)     101190.28
62.135

  LATERAL DRAINAGE COLLECTED      1.64665 (  0.78993)      5977.352
3.67032
    FROM LAYER  3

  PERCOLATION/LEAKAGE THROUGH     0.00000 (  0.00000)         0.013
0.00001
    LAYER  4
```

```
  AVERAGE HEAD ON TOP             0.069 (    0.033)
    OF LAYER  4

  CHANGE IN WATER STORAGE        12.603   (  6.0718)      45747.70
28.091


*************************************************************************
******



*************************************************************************
*****

                  PEAK DAILY VALUES FOR YEARS    1 THROUGH    5
    ---------------------------------------------------------------------
---
                                                  (INCHES)      (CU. FT.)
                                                 ----------   ------------
-
       PRECIPITATION                               5.22         18948.600

       RUNOFF                                      2.706         9821.3838

       DRAINAGE COLLECTED FROM LAYER  3            0.02614
94.89672

       PERCOLATION/LEAKAGE THROUGH LAYER  4        0.000000
0.00016

       AVERAGE HEAD ON TOP OF LAYER  4             0.401

       MAXIMUM HEAD ON TOP OF LAYER  4             0.799

       LOCATION OF MAXIMUM HEAD IN LAYER  3
             (DISTANCE FROM DRAIN)                 0.0 FEET

       SNOW WATER                                  1.67          6061.1182


       MAXIMUM VEG. SOIL WATER (VOL/VOL)                   0.4570

       MINIMUM VEG. SOIL WATER (VOL/VOL)                   0.1164


        ***  Maximum heads are computed using McEnroe's equations.  ***

             Reference:  Maximum Saturated Depth over Landfill Liner
                         by Bruce M. McEnroe, University of Kansas
                         ASCE Journal of Environmental Engineering
                         Vol. 119, No. 2, March 1993, pp. 262-270.
```

****
*****

****
*****

FINAL WATER STORAGE AT END OF YEAR 5

LAYER	(INCHES)	(VOL/VOL)
1	3.3213	0.2768
2	713.8151	0.3305
3	1.0655	0.0444
4	0.0000	0.0000
SNOW WATER	0.000	

****
*****

****
*****

ATTACHMENT 3

SSWMC Historical
Leachate Generation and
Movement

Month/Year	Cell 1 (GPAD)	Cell 2 (GPAD)
Jan-86		
Feb-86	25	0
Mar-86	29	0
Apr-86	34	0
May-86	22	0
Jun-86	18	0
Jul-86	31	0
Aug-86	45	0
Sep-86	27	0
Oct-86	23	0
Nov-86	26	0
Dec-86	74	0
Jan-87	116	0
Feb-87	180	0
Mar-87	146	0
Apr-87	106	0
May-87	145	0
Jun-87	152	0
Jul-87	132	0
Aug-87	72	0
Sep-87	61	0
Oct-87	69	0
Nov-87	64	0
Dec-87	143	0
Jan-88	193	0
Feb-88	465	0
Mar-88	266	0
Apr-88	346	0
May-88	222	0
Jun-88	129	0
Jul-88	79	0
Aug-88	98	0
Sep-88	133	0
Oct-88	90	0
Nov-88	239	0
Dec-88	155	0
Jan-89	190	0
Feb-89	196	0
Mar-89	516	0
Apr-89	446	0
May-89	348	0
Jun-89	301	0
Jul-89	0	0
Aug-89	0	0
Sep-89	0	0
Oct-89	0	0
Nov-89	0	0
Dec-89	0	0
Jan-90	304	58
Feb-90	229	38

Mar-90	168	28
Apr-90	220	48
May-90	178	47
Jun-90	146	17
Jul-90	121	37
Aug-90	114	18
Sep-90	76	11
Oct-90	72	33
Nov-90	74	35
Dec-90	125	59
Jan-91	267	176
Feb-91	104	96
Mar-91	163	107
Apr-91	133	128
May-91	114	84
Jun-91	143	90
Jul-91	136	90
Aug-91	190	95
Sep-91	115	56
Oct-91	123	61
Nov-91	109	64
Dec-91	175	58
Jan-92	159	60
Feb-92	170	82
Mar-92	207	129
Apr-92	134	74
May-92	114	88
Jun-92	142	115
Jul-92	97	74
Aug-92	181	344
Sep-92	180	313
Oct-92	131	148
Nov-92	208	165
Dec-92	261	144
Jan-93	321	155
Feb-93	199	91
Mar-93	312	146
Apr-93	227	202
May-93	174	123
Jun-93	119	153
Jul-93	92	111
Aug-93	91	139
Sep-93	107	217
Oct-93	93	174
Nov-93	216	165
Dec-93	294	210
Jan-94	298	1,365
Feb-94	515	798
Mar-94	462	1,420
Apr-94	331	1,413
May-94	170	357
Jun-94	150	281
Jul-94	117	272
Aug-94	253	361
Sep-94	232	280
Oct-94	139	246
Nov-94	250	236

Dec-94	146	228
Jan-95	260	217
Feb-95	253	210
Mar-95	300	223
Apr-95	134	177
May-95	273	229
Jun-95	149	206
Jul-95	132	179
Aug-95	102	146
Sep-95	82	163
Oct-95	192	169
Nov-95	321	231
Dec-95	288	190
Jan-96	833	347
Feb-96	684	366
Mar-96	342	225
Apr-96	747	479
May-96	343	462
Jun-96	248	244
Jul-96	276	312
Aug-96	187	223
Sep-96	375	240
Oct-96	316	245
Nov-96	135	189
Dec-96	519	308
Jan-97	364	258
Feb-97	573	306
Mar-97	423	258
Apr-97	267	227
May-97	155	177
Jun-97	112	195
Jul-97	140	172
Aug-97	114	174
Sep-97	105	186
Oct-97	222	226
Nov-97	405	211
Dec-97	264	181
Jan-98	340	193
Feb-98	343	185
Mar-98	271	144
Apr-98	194	138
May-98	204	128
Jun-98	202	163
Jul-98	144	124
Aug-98	131	120
Sep-98	111	119
Oct-98	102	116
Nov-98	82	110
Dec-98	83	113
Jan-99	90	112
Feb-99	83	105
Mar-99	90	126
Apr-99	78	102
May-99	75	93
Jun-99	80	95
Jul-99	90	112
Aug-99	89	107

Sep-99	102	144
Oct-99	78	105
Nov-99	68	94
Dec-99	66	100
Jan-00	67	104
Feb-00	78	96
Mar-00	84	119
Apr-00	73	89
May-00	81	90
Jun-00	76	112
Jul-00	82	93
Aug-00	72	105
Sep-00	80	126
Oct-00	51	78
Nov-00	59	83
Dec-00	54	77
Jan-01	67	89
Feb-01	64	83
Mar-01	71	104
Apr-01	63	77
May-01	66	78
Jun-01	86	105
Jul-01	74	89
Aug-01	101	116
Sep-01	50	60
Oct-01	39	71
Nov-01	58	76
Dec-01	48	63
Jan-02	53	75
Feb-02	48	64
Mar-02	56	70
Apr-02	60	80
May-02	79	66
Jun-02	56	61
Jul-02	58	61
Aug-02	63	69
Sep-02	97	92
Oct-02	68	83
Nov-02	92	81
Dec-02	89	139
Jan-03	64	58
Feb-03	94	105
Mar-03	75	74
Apr-03	74	75
May-03	83	68
Jun-03	72	68
Jul-03	75	67
Aug-03	79	80
Sep-03	90	83
Oct-03	85	60
Nov-03	71	74
Dec-03	75	74
Jan-04	48	59
Feb-04	56	59
Mar-04	54	55
Apr-04	72	73
May-04	57	51

Jun-04	54	56
Jul-04	53	54
Aug-04	73	67
Sep-04	47	52
Oct-04	74	58
Nov-04	49	58
Dec-04	43	55
Jan-05	55	56
Feb-05	57	60
Mar-05	62	63
Apr-05	60	56
May-05	61	66
Jun-05	52	57
Jul-05	57	54
Aug-05	55	52
Sep-05	43	42
Oct-05	68	81
Nov-05	64	58
Dec-05	63	57
Jan-06	117	68
Feb-06	45	48
Mar-06	35	40
Apr-06	49	46
May-06	51	45
Jun-06	85	70
Jul-06	68	57
Aug-06	54	45
Sep-06	68	70
Oct-06	71	63
Nov-06	127	108
Dec-06		
Jan-07		
Feb-07		
Mar-07		
Apr-07		
May-07		
Jun-07		
Jul-07		
Aug-07		
Sep-07		
Oct-07		
Nov-07		
Dec-07		
---	---	---
Months	225	225
Minimum	0	0
Maximum	833	1,420
Average	146	120
Total		

ATTACHMENT 4

North Wake Landfill

Leachate Discharge Flow Readings

2007-2008

Date	Time	Flow Meter Reading (gallons)	Comments	Discharge Between Readings (gallons)	Average Daily Discharge (gallons)
12/18/2006	-	76,941,530	Start City of Raleigh Invoice		
1/2/2007	13:39	76,941,530	Start Discharge Event	0	
1/2/2007	13:58	76,943,150	Start Sampling Event	1,620	
1/3/2007	13:58	77,054,360	End Sampling Event	111,210	
1/11/2007	15:09	77,834,410	End Discharge Event	892,880	99,209
1/30/2007	-	77,834,410	End City of Raleigh Invoice	892,880	20,765
2/28/2007	-	77,834,420	Start City of Raleigh Invoice	10	
3/7/2007	11:15	77,834,420	Start Discharge Event	0	
3/7/2007	12:00	77,838,280	Start Sampling event; 26 hours	3,860	
3/8/2007	14:02	77,962,170	End Sampling event; 26 hours	123,890	
3/22/2007	8:35	78,500,560	End Discharge Event	666,140	44,409
3/27/2007	-	78,500,560	End City of Raleigh Invoice	666,140	24,672
3/29/2007	14:45	78,500,560	Start Sampling event; 1.25 hours	0	
3/29/2007	16:00	78,501,420	End Sampling event; 1.25 hours	860	
4/27/2007	-	78,643,800	Start City of Raleigh Invoice	142,380	
5/9/2007	11:45	78,718,650	Start Discharge Event	74,850	
5/9/2007	12:18	78,719,070	Start Sampling Event	420	
5/10/2007	12:03	78,734,960	End Sampling Event	15,890	
5/14/2007	10:14	78,787,030	End Discharge Event	68,380	13,676
5/25/2007	-	78,787,040	Start City of Raleigh Invoice	10	
5/25/2007	-	78,787,040	End City of Raleigh Invoice	143,240	5,116
8/1/2007	10:25	78,787,050	Start Discharge Event	10	
8/1/2007	11:35	78,791,240	Start Sampling Event	4,190	
8/2/2007	11:23	78,871,230	End Sampling Event	79,990	
8/6/2007	7:36	79,104,090	End Discharge Event	317,040	63,408
8/28/2007	-	79,104,090	End City of Raleigh Invoice	317,050	3,337
11/14/2007	14:00	79,104,580	Start Discharge Event	490	
11/14/2007	14:00	79,104,580	Start Sampling Event	0	
11/15/2007	14:00	79,136,380	End Sampling Event	31,800	
11/23/2007	14:00	79,438,110	End Discharge Event	333,530	37,059
12/26/2007	-	79,438,110	Start City of Raleigh Invoice	0	

North Wake Landfill

Leachate Discharge Flow Readings

2007-2008

Date	Time	Flow Meter Reading (gallons)	Comments	Discharge Between Readings (gallons)	Average Daily Discharge (gallons)
1/8/2008	8:42	79,438,120	Start Discharge Event	10	
1/31/2008	11:22	80,297,760	Start Sampling Event	859,640	
2/1/2008	11:22	80,335,840	End Sampling Event	38,080	
2/1/2008	11:22	80,335,840	End Discharge Event	897,720	37,405
2/4/2008	13:30	80,442,180	Start Discharge Event	106,340	
2/4/2008	13:30	80,442,180	Start Sampling Event	0	
2/5/2008	-	80,474,250	End City of Raleigh Invoice	1,036,140	25,272
2/5/2008	13:30	80,479,180	End Sampling Event	4,930	
2/29/2008	8:30	80,834,120	End Discharge Event	391,940	15,678
5/1/2008	12:20	80,834,140	Start Discharge Event	20	
5/27/2008	12:55	81,508,740	Start Sampling Event	674,600	
5/28/2008	12:55	81,563,200	End Sampling Event	54,460	
5/30/2008	21:30	81,741,560	End Discharge Event	907,420	31,290
8/1/2008	11:30	81,741,590	Start Discharge Event	30	
8/4/2008	12:43	81,886,050	Start Sampling Event	144,460	
8/5/2008	12:43	81,934,610	End Sampling Event	48,560	
8/31/2008	10:30	82,819,140	End Discharge Event	1,077,550	35,918
9/10/2008	10:15	82,819,480	Start Discharge Event	340	
9/10/2008	10:18	82,819,480	Start Sampling Event	0	
9/11/2008	10:18	82,867,010	End Sampling Event	47,530	
9/26/2008	17:00	83,222,160	End Discharge Event	402,680	25,168
10/1/2008	10:30	83,222,160	Start Discharge Event	0	
10/1/2008	10:45	83,222,770	Start Sampling Event	610	
10/2/2008	10:45	83,278,700	End Sampling Event	55,930	
10/30/2008	?	?	End Discharge Event - Not Completed		

Discharge between 12/18/06 and 10/2/08: 6,337,170 gallons

Average Daily Discharge between 12/18/06 and 10/2/08: 9,690 gallons

ATTACHMENT 5

Table 3A
Detected Groundwater Constituents - Metals
North Wake Lined Landfill

Monitor Well	Sample Date	Antimony	Arsenic	Barium	Beryllium	Cadmium	Chromium	Cobalt	Copper	Lead	Nickel	Selenium	Silver	Thallium	Vanadium	Zinc
NC2L		**0.0014***	**0.05**	**2**	**0.004***	**0.00175**	**0.05**	**0.07***	**1**	**0.015**	**0.1**	**0.05**	**0.0175**	**0.00028***	**0.0035***	**1.05**
SWSL		**0.006**	**0.010**	**0.1**	**0.001**	**0.001**	**0.01**	**0.01**	**0.01**	**0.01**	**0.05**	**0.01**	**0.01**	**0.0055**	**0.025**	**0.01**
MW-11	31-Oct-95		0.011	0.842	**0.008**		0.024	**0.071**	0.331	**0.026**	0.087				**0.117**	0.314
MW-11	19-Dec-95															
MW-11	26-Feb-96						0.011	0.022								0.106
MW-11	29-Apr-96															0.106
MW-11	27-Nov-96			0.035												
MW-11	22-Apr-97															0.13
MW-11	31-Oct-97															0.066
MW-11	11-May-98															
MW-11	8-Dec-98					**0.0021**										
MW-11	14-Apr-99															
MW-11	30-Nov-99															
MW-11	5-Apr-00					0.0012										
MW-11	18-Dec-00															
MW-11	18-Apr-01															
MW-11	27-Nov-01			0.311					0.0165							0.0297
MW-11	5-Apr-02															
MW-11	5-Nov-02															
MW-11	15-Apr-03															
MW-11	29-Oct-03															
MW-11	21-Apr-04															
MW-11	18-Nov-04															
MW-11	21-Apr-05															
MW-11	11-Nov-05															0.083
MW-11	13-Apr-06															
MW-11	8-Nov-06															0.082
MW-11	20-Apr-07															0.021
MW-11	7-Nov-07			0.332	0.0021					0.012					**0.058**	0.113
MW-11	15-May-08			0.0778J			0.0054J		0.0105	0.00392J			0.00448J	**0.00563**	0.00290J	0.0161
MW-11D	31-Oct-95					**0.002**										
MW-11D	19-Dec-95															
MW-11D	26-Feb-96					0.001										
MW-11D	29-Apr-96															
MW-11D (dup)	29-Apr-96															
MW-11 D	27-Nov-96			0.026												
MW-11D	22-Apr-97															0.054
MW-11D	31-Oct-97															0.026
MW-11D	11-May-98												0.012			0.069
MW-11D	8-Dec-98					**0.0019**										
MW-11D	14-Apr-99															
MW-11D	30-Nov-99															
MW-11D	5-Apr-00															
MW-11D	18-Dec-00															
MW-11D	18-Apr-01															
MW-11D	27-Nov-01															
MW-11D	5-Apr-02															
MW-11D	5-Nov-02															
MW-11D	15-Apr-03															
MW-11D	29-Oct-03															
MW-11D	21-Apr-04															
MW-11D	18-Nov-04															
MW-11D	21-Apr-05															
MW-11D	11-Nov-05															
MW-11D	13-Apr-06															
MW-11D	8-Nov-06															
MW-11D	20-Apr-07															
MW-11D	7-Nov-07															0.016
MW-11D	15-May-08			0.0597J	0.00307		0.00641J		0.00821J	0.00459J			0.00398J	**0.00691**	0.000970J	0.00982J
MW-12	31-Oct-95															
MW-12	19-Dec-95															
MW-12 (dup)	19-Dec-95															
MW-12	26-Feb-96															
MW-12	29-Apr-96															
MW-12	27-Nov-96			0.2				0.005	0.01	0.006					**0.014**	0.028
MW-12	24-Apr-97						0.012									0.11
MW-12	3-Nov-97			0.55	0.0029	0.0013	0.021	0.023		**0.018**					**0.12**	0.31
MW-12	23-Nov-98															
MW-12	14-Apr-99															
MW-12	1-Dec-99															
MW-12	5-Apr-00															
MW-12	18-Dec-00															
MW-12	17-Apr-01															
MW-12	28-Nov-01															
MW-12	3-Apr-02															
MW-12	5-Nov-02					0.0013										
MW-12	15-Apr-03															
MW-12	30-Oct-03															
MW-12	7-Apr-04															
MW-12	18-Nov-04						0.019	0.018							**0.065**	0.05
MW-12	21-Apr-05															
MW-12	11-Nov-05															
MW-12	13-Apr-06															
MW-12	8-Nov-06															
MW-12	20-Apr-07			0.26	0.001				0.037						**0.05**	0.061
MW-12	7-Nov-07			0.266	0.0014				0.031						**0.038**	0.068
MW-12	14-May-08			0.287		0.00068J	0.0181	0.00992J	0.0656	**0.0206**		0.0101			**0.0578**	0.0592

Table 3A
Detected Groundwater Constituents - Metals
North Wake Lined Landfill

Monitor Well	Sample Date	Antimony	Arsenic	Barium	Beryllium	Cadmium	Chromium	Cobalt	Copper	Lead	Nickel	Selenium	Silver	Thallium	Vanadium	Zinc
NC2L		**0.0014***	**0.05**	**2**	**0.004***	**0.00175**	**0.05**	**0.07***	**1**	**0.015**	**0.1**	**0.05**	**0.0175**	**0.00028***	**0.0035***	**1.05**
SWSL		**0.006**	**0.010**	**0.1**	**0.001**	**0.001**	**0.01**	**0.01**	**0.01**	**0.01**	**0.05**	**0.01**	**0.01**	**0.0055**	**0.025**	**0.01**
MW-12D	31-Oct-95															
MW-12D	19-Dec-95															
MW-12D	26-Feb-96															
MW-12D	29-Apr-96															
MW-12 D	27-Nov-96			0.013												
MW-12D	24-Apr-97															
MW-12D	3-Nov-97															
MW-12D	23-Nov-98															
MW-12D	14-Apr-99															
MW-12D	1-Dec-99															
MW-12D	5-Apr-00															
MW-12D	18-Dec-00															
MW-12D (dup)	18-Dec-00					0.0011										
MW-12D	17-Apr-01															
MW-12D	28-Nov-01															
MW-12D	3-Apr-02															
MW-12D	5-Nov-02															
MW-12D	15-Apr-03															
MW-12D	30-Oct-03															
MW-12D	7-Apr-04															
MW-12D	18-Nov-04															
MW-12D	21-Apr-05															
MW-12D	11-Nov-05															
MW-12D	13-Apr-06															
MW-12D	8-Nov-06															
MW-12D	20-Apr-07															
MW-12D	7-Nov-07															
MW-12D	14-May-08			0.0228J			0.00345J		0.0131	0.00947J						
MW-13	31-Oct-95				0.002		0.022				0.063				**0.044**	0.069
MW-13	19-Dec-95															
MW-13	26-Feb-96															
MW-13	29-Apr-96															
MW-13	27-Nov-96			0.018												
MW-13	24-Apr-97															
MW-13	7-May-98						0.021									
MW-13	23-Nov-98					**0.0068**	**0.059**	**0.019**							**0.081**	0.12
MW-13	14-Apr-99															
MW-13	1-Dec-99															
MW-13	6-Apr-00															
MW-13	18-Dec-00					0.0011	0.0102									
MW-13	17-Apr-01															
MW-13	28-Nov-01	NS	NS	NS	NS	NS	NS	NS	NS	NS	NS	NS	NS	NS	NS	NS
MW-13	3-Apr-02															
MW-13	6-Nov-02															
MW-13	15-Apr-03															
MW-13 (dup)	15-Apr-03															
MW-13	30-Oct-03															
MW-13	8-Apr-04						0.0222									
MW-13 (dup)	8-Apr-04															
MW-13	18-Nov-04						**0.086**	0.033							**0.099**	0.1
MW-13	21-Apr-05															
MW-13	11-Nov-05			0.578			0.0158				**0.109**				**0.217**	0.272
MW-13	13-Apr-06						0.012									
MW-13	8-Nov-06						0.017									
MW-13	20-Apr-07															0.012
MW-13	7-Nov-07			0.157			0.024								**0.03**	0.062
MW-13	13-May-08			0.0446J			0.00748J		0.00466J	0.00881J					**0.00589J**	0.00845J
MW-14	31-Oct-95										0.052					
MW-14	19-Dec-95															
MW-14	26-Feb-96									**0.021**						
MW-14	29-Apr-96						0.013	**0.012**								
MW-14	27-Nov-96			0.011												
MW-14	24-Apr-97															0.098
MW-14	1-Nov-97															0.098
MW-14	7-May-98						0.034				0.088					0.064
MW-14	23-Nov-98															
MW-14 (dup)	23-Nov-98															
MW-14	14-Apr-99															
MW-14	1-Dec-99					0.001										
MW-14	6-Apr-00															
MW-14 (dup)	6-Apr-00															
MW-14	18-Dec-00															
MW-14	17-Apr-01															
MW-14	28-Nov-01															
MW-14	3-Apr-02															
MW-14	5-Nov-02															
MW-14	15-Apr-03					0.0017										
MW-14	29-Oct-03															
MW-14	8-Apr-04															
MW-14	18-Nov-04															
MW-14	21-Apr-05															
MW-14	11-Nov-05															
MW-14	13-Apr-06															
MW-14	8-Nov-06															
MW-14	20-Apr-07															
MW-14	7-Nov-07								0.013							0.025
MW-14	13-May-08			0.0338J			0.00554J		0.00642J	0.00787J						

Table 3A
Detected Groundwater Constituents - Metals
North Wake Lined Landfill

Monitor Well	Sample Date	Antimony	Arsenic	Barium	Beryllium	Cadmium	Chromium	Cobalt	Copper	Lead	Nickel	Selenium	Silver	Thallium	Vanadium	Zinc
NC2L		**0.0014***	**0.05**	**2**	**0.004***	**0.00175**	**0.05**	**0.07***	**1**	**0.015**	**0.1**	**0.05**	**0.0175**	**0.00028***	**0.0035***	**1.05**
SWSL		**0.006**	**0.010**	**0.1**	**0.001**	**0.001**	**0.01**	**0.01**	**0.01**	**0.01**	**0.05**	**0.01**	**0.01**	**0.0055**	**0.025**	**0.01**
MW-15	31-Oct-95						0.012				0.064					
MW-15	19-Dec-95															
MW-15	26-Feb-96						0.036	0.012							**0.143**	
MW-15	29-Apr-96				**0.005**		**0.196**	0.052	0.503	**0.034**	0.094				**0.410**	0.240
MW-15	27-Nov-96			0.15			0.003	0.007	0.017						**0.051**	0.046
MW-15 (dup)	27-Nov-96			0.2			0.004	0.007	0.021						**0.072**	0.046
MW-15	24-Apr-97															0.078
MW-15 (dup)	24-Apr-97															
MW-15	31-Oct-97															0.078
MW-15	7-May-98													**0.012**		
MW-15	23-Nov-98					**0.0025**	0.01								**0.040**	0.12
MW-15	14-Apr-99					0.0011										0.0159
MW-15	1-Dec-99															
MW-15	6-Apr-00					0.0015										
MW-15	18-Dec-00					0.0014		0.0102							**0.0941**	0.475
MW-15	17-Apr-01															
MW-15 (dup)	17-Apr-01															
MW-15	28-Nov-01					0.0011									**0.0669**	0.165
MW-15	3-Apr-02															
MW-15	6-Nov-02															
MW-15	15-Apr-03					**0.0019**	0.0195	0.0169							**0.0617**	
MW-15	29-Oct-03															
MW-15	8-Apr-04															
MW-15	18-Nov-04						**0.06**	0.025			0.052				**0.142**	0.09
MW-15	21-Apr-05															
MW-15	11-Nov-05															
MW-15	13-Apr-06															
MW-15	8-Nov-06						0.011									0.061
MW-15	20-Apr-07															
MW-15	7-Nov-07								0.015						**0.027**	0.077
MW-15	13-May-08			0.0896J			0.0121	0.00526J	0.0197	0.00515J		0.0139			**0.0191J**	0.0134
MW-15D	31-Oct-95															
MW-15D	19-Dec-95															
MW-15D	26-Feb-96															
MW-15D	29-Apr-96															
MW-15D	27-Nov-96			0.05			0.003								**0.005**	
MW-15D	24-Apr-97															0.05
MW-15D	31-Oct-97									0.013						0.05
MW-15D	7-May-98						0.013							**0.011**		
MW-15D	23-Nov-98															
MW-15D	14-Apr-99															
MW-15D	1-Dec-99															
MW-15D	6-Apr-00															
MW-15D	18-Dec-00															
MW-15D	17-Apr-01															
MW-15D	28-Nov-01															
MW-15D	3-Apr-02															
MW-15D	6-Nov-02															
MW-15D	15-Apr-03															
MW-15D	29-Oct-03															
MW-15D	8-Apr-04															
MW-15D	18-Nov-04															
MW-15D	21-Apr-05															
MW-15D	11-Nov-05															
MW-15D	13-Apr-06															
MW-15D	8-Nov-06															
MW-15D	20-Apr-07															
MW-15D	7-Nov-07															
MW-15D	13-May-08			0.0601J			0.00506J		0.00522J	0.00788J						0.00536J
MW-16	31-Oct-95						**0.590**				0.073					
MW-16	19-Dec-95						**0.204**									
MW-16	26-Feb-96						**0.086**									
MW-16 (dup)	26-Feb-96						0.020									
MW-16	29-Apr-96				0.003		0.040	0.017		**0.037**					**0.065**	0.051
MW-16	27-Nov-96			0.15				0.002								
MW-16	24-Apr-97						0.012			0.011						0.14
MW-16	31-Oct-97							0.01								0.045
MW-16 (dup)	31-Oct-97						0.012	0.013		0.012						0.031
MW-16	7-May-98						0.012							**0.015**		
MW-16	23-Nov-98					0.0015										
MW-16	14-Apr-99					0.0013										
MW-16	1-Dec-99					0.0013										
MW-16	6-Apr-00							0.0133								
MW-16	18-Dec-00															
MW-16	17-Apr-01															
MW-16	28-Nov-01		0.0133													
MW-16	3-Apr-02															
MW-16	6-Nov-02															
MW-16	15-Apr-03															
MW-16	29-Oct-03															
MW-16 (dup)	29-Oct-03															
MW-16	8-Apr-04		0.0151					0.0124								
MW-16	18-Nov-04	dry	dry	dry	dry	dry	dry	dry	dry	dry	dry	dry	dry	dry	dry	dry
MW-16	21-Apr-05															
MW-16	11-Nov-05															
MW-16	13-Apr-06															
MW-16	8-Nov-06		0.012				0.012	0.012								
MW-16	20-Apr-07			0.112					0.011							0.029
MW-16	7-Nov-07			0.167					0.012							0.023

Table 3A
Detected Groundwater Constituents - Metals
North Wake Lined Landfill

Monitor Well	Sample Date	Antimony	Arsenic	Barium	Beryllium	Cadmium	Chromium	Cobalt	Copper	Lead	Nickel	Selenium	Silver	Thallium	Vanadium	Zinc
NC2L		**0.0014***	**0.05**	**2**	**0.004***	**0.00175**	**0.05**	**0.07***	**1**	**0.015**	**0.1**	**0.05**	**0.0175**	**0.00028***	**0.0035***	**1.05**
SWSL		**0.006**	**0.010**	**0.1**	**0.001**	**0.001**	**0.01**	**0.01**	**0.01**	**0.01**	**0.05**	**0.01**	**0.01**	**0.0055**	**0.025**	**0.01**
MW-16	13-May-08			0.144		0.00027J	0.0152	0.00752J	0.0295	0.012		0.012	0.00094J		**0.0307J**	0.129
MW-17	31-Oct-95															
MW-17	19-Dec-95						0.012									
MW-17	26-Feb-96				0.003		0.036	0.011		**0.016**					**0.104**	0.052
MW-17	29-Apr-96						0.014									
MW-17	27-Nov-96			0.023			0.003									
MW-17	24-Apr-97						0.02									0.056
MW-17	31-Oct-97						0.013			0.01						0.035
MW-17	11-May-98						0.011									0.13
MW-17	23-Nov-98															
MW-17	14-Apr-99															
MW-17	1-Dec-99															
MW-17	6-Apr-00															
MW-17	18-Dec-00															
MW-17	17-Apr-01															
MW-17	29-Nov-01															
MW-17	3-Apr-02															
MW-17 (dup)	3-Apr-02															
MW-17	6-Nov-02															
MW-17	15-Apr-03															
MW-17	29-Oct-03															
MW-17	8-Apr-04															
MW-17	18-Nov-04															
MW-17	21-Apr-05															
MW-17	11-Nov-05						0.014									
MW-17	13-Apr-06															
MW-17	8-Nov-06				0.003		0.02			**0.017**					**0.042**	
MW-17	20-Apr-07															
MW-17	7-Nov-07			0.107	0.003		0.019		0.011	**0.015**					**0.041**	0.029
MW-17	13-May-08			0.0417J			0.0112		0.00808J	0.00844J			0.0015J		**0.0113J**	0.00722J
MW-17D	31-Oct-95															
MW-17D	19-Dec-95															
MW-17D	26-Feb-96															
MW-17D	29-Apr-96															
MW-17D	27-Nov-96			0.026			0.005									
MW-17D	24-Apr-97															
MW-17D	31-Oct-97															
MW-17D	11-May-98															0.058
MW-17D	23-Nov-98															
MW-17D	14-Apr-99															
MW-17D	1-Dec-99															
MW-17D	6-Apr-00															
MW-17D	18-Dec-00															
MW-17D	17-Apr-01															
MW-17D	29-Nov-01															
MW-17D	3-Apr-02															
MW-17D	6-Nov-02															0.539
MW-17D	15-Apr-03															
MW-17D	29-Oct-03															
MW-17D	8-Apr-04															
MW-17D	18-Nov-04															
MW-17D	21-Apr-05					**0.002**										
MW-17D	11-Nov-05															
MW-17D	13-Apr-06															
MW-17D	8-Nov-06															
MW-17D	20-Apr-07						0.021									
MW-17D	7-Nov-07															
MW-17D	13-May-08			0.0382J			0.00345J		0.00446J	0.00853J			0.0013J			0.0063J
MW-18	31-Oct-95			0.857	**0.004**		**0.271**	**0.092**		**0.018**	**0.264**				**0.207**	0.428
MW-18 (dup)	31-Oct-95			1.347	**0.009**		**0.505**	**0.145**		**0.027**	**0.458**				**0.307**	0.875
MW-18	19-Dec-95															
MW-18	26-Feb-96						**0.067**	0.038		0.012					**0.107**	0.150
MW-18	29-Apr-96				**0.005**		**0.299**	**0.127**	0.620	**0.023**	**0.218**				**0.165**	0.606
MW-18	27-Nov-96			0.018												
MW-18	24-Apr-97					0.001		0.045			0.066				**0.11**	0.26
MW-18	31-Oct-97						**0.064**	0.026							**0.062**	0.11
MW-18	7-May-98						0.014									
MW-18	23-Nov-98					0.0012	0.013									
MW-18	14-Apr-99					**0.0018**										
MW-18	1-Dec-99						0.0123									
MW-18	6-Apr-00															
MW-18	18-Dec-00															
MW-18	17-Apr-01															
MW-18	29-Nov-01						0.0231	0.0165								0.0676
MW-18	5-Apr-02															
MW-18	6-Nov-02						0.0146	0.0106								
MW-18	15-Apr-03					0.0010	0.0235	0.0133								
MW-18	29-Oct-03						0.0275	0.0134								
MW-18	8-Apr-04						0.0251	0.0119								
MW-18	18-Nov-04															
MW-18	21-Apr-05															
MW-18	11-Nov-05															
MW-18	13-Apr-06						0.023									0.051
MW-18	8-Nov-06			0.598	0.003		0.047	0.019		**0.017**					**0.056**	0.244
MW-18	20-Apr-07			0.106					0.026						**0.025**	0.043
MW-18	7-Nov-07			0.281	0.001		0.035	0.013	0.043						**0.044**	0.107
MW-18	13-May-08			0.0726J			0.022	0.00544J	0.0286	0.0128	0.00608J	0.0091J			**0.0178J**	0.0223

Table 3A
Detected Groundwater Constituents - Metals
North Wake Lined Landfill

Monitor Well	Sample Date	Antimony	Arsenic	Barium	Beryllium	Cadmium	Chromium	Cobalt	Copper	Lead	Nickel	Selenium	Silver	Thallium	Vanadium	Zinc
NC2L		**0.0014***	**0.05**	**2**	**0.004***	**0.00175**	**0.05**	**0.07***	**1**	**0.015**	**0.1**	**0.05**	**0.0175**	**0.00028***	**0.0035***	**1.05**
SWSL		**0.006**	**0.010**	**0.1**	**0.001**	**0.001**	**0.01**	**0.01**	**0.01**	**0.01**	**0.05**	**0.01**	**0.01**	**0.0055**	**0.025**	**0.01**
MW-19	8-Mar-99					**0.003**	**0.124**	0.0285		0.0124	0.056				**0.0826**	0.0573
MW-19	15-Apr-99															
MW-19	27-May-99															
MW-19	20-Jul-99															
MW-19	4-Aug-99															
MW-19 (dup)	4-Aug-99															
MW-19	1-Dec-99															
MW-19	5-Apr-00															
MW-19	18-Dec-00															
MW-19	18-Apr-01															
MW-19	28-Nov-01															
MW-19	4-Apr-02															
MW-19	5-Nov-02						0.0178									
MW-19	16-Apr-03						0.0294									
MW-19	30-Oct-03															
MW-19	7-Apr-04															
MW-19	18-Nov-04						0.018									
MW-19	21-Apr-05															
MW-19	11-Nov-05															
MW-19	13-Apr-06															
MW-19	8-Nov-06															
MW-19	20-Apr-07															
MW-19	7-Nov-07						0.017		0.029							0.012
MW-19	14-May-08			0.033J			0.0106		0.012							0.00437J
MW-20	15-Apr-99					0.00012	0.0118	0.036								0.098
MW-20	27-May-99															
MW-20 (dup)	27-May-99															
MW-20	20-Jul-99															
MW-20	4-Aug-99															
MW-20	1-Dec-99															
MW-20	5-Apr-00															
MW-20	18-Dec-00															
MW-20	18-Apr-01															
MW-20	27-Nov-01			0.179				0.0279	0.122							0.0827
MW-20	4-Apr-02							0.011								
MW-20	6-Nov-02															
MW-20	16-Apr-03					0.0013	0.0101	0.0191								0.0601
MW-20	30-Oct-03															
MW-20	7-Apr-04															
MW-20	18-Nov-04							0.01								
MW-20	21-Apr-05															
MW-20	11-Nov-05															
MW-20	13-Apr-06															
MW-20	8-Nov-06															
MW-20	20-Apr-07								0.019							0.015
MW-20	7-Nov-07			0.147				0.012	0.075	**0.019**					**0.029**	0.079
MW-20	14-May-08		0.00231J	0.0364J			0.00474J		0.0272	0.0113					**0.0107J**	0.0126
MW-21	15-Apr-99					**0.004**		0.0632	0.362	0.0147	0.0527				**0.0565**	0.347
MW-21	27-May-99															
MW-21	20-Jul-99															
MW-21	4-Aug-99															
MW-21	30-Nov-99															
MW-21	5-Apr-00															
MW-21	18-Dec-00															
MW-21	18-Apr-01															
MW-21	27-Nov-01															
MW-21	4-Apr-02															
MW-21	5-Nov-02															
MW-21	16-Apr-03															
MW-21	30-Oct-03															
MW-21	7-Apr-04															
MW-21	18-Nov-04							0.016							**0.049**	
MW-21	21-Apr-05															
MW-21	11-Nov-05															
MW-21	13-Apr-06															
MW-21	8-Nov-06															
MW-21	20-Apr-07															
MW-21	7-Nov-07															0.011
MW-21	14-May-08			0.085J			0.00425J		0.0192	0.00645J					**0.00538J**	0.0109
MW-21 (dup)	14-May-08			0.0914J			0.00476J		0.0205	0.00542J			0.00446J	**0.00692**	**0.012J**	0.0168

Table 3A
Detected Groundwater Constituents - Metals
North Wake Lined Landfill

Monitor Well	Sample Date	Antimony	Arsenic	Barium	Beryllium	Cadmium	Chromium	Cobalt	Copper	Lead	Nickel	Selenium	Silver	Thallium	Vanadium	Zinc
NC2L		**0.0014***	**0.05**	**2**	**0.004***	**0.00175**	**0.05**	**0.07***	**1**	**0.015**	**0.1**	**0.05**	**0.0175**	**0.00028***	**0.0035***	**1.05**
SWSL		**0.006**	**0.010**	**0.1**	**0.001**	**0.001**	**0.01**	**0.01**	**0.01**	**0.01**	**0.05**	**0.01**	**0.01**	**0.0055**	**0.025**	**0.01**
MW-25	15-Apr-99															
MW-25	27-May-99															
MW-25	20-Jul-99															
MW-25 (dup)	20-Jul-99															
MW-25	4-Aug-99															
MW-25	1-Dec-99															
MW-25	5-Apr-00															
MW-25	18-Dec-00					0.0011										
MW-25	18-Apr-01															
MW-25	27-Nov-01															
MW-25	4-Apr-02															
MW-25	5-Nov-02															
MW-25	16-Apr-03															
MW-25	30-Oct-03															
MW-25	7-Apr-04															
MW-25	18-Nov-04															
MW-25	21-Apr-05															
MW-25	11-Nov-05															
MW-25	13-Apr-06															
MW-25	8-Nov-06															
MW-25	20-Apr-07															0.01
MW-25	7-Nov-07			0.126			0.015									0.028
MW-25	14-May-08			0.0528J			0.00441J		0.00472J	0.00397J						
MW-25D	15-Apr-99															
MW-25D	27-May-99															
MW-25D	20-Jul-99															
MW-25D	4-Aug-99															
MW-25D	1-Dec-99															
MW-25D	5-Apr-00															
MW-25D	18-Dec-00															
MW-25D	18-Apr-01					**0.0039**										
MW-25D	27-Nov-01								0.0109							
MW-25D	4-Apr-02															
MW-25D	5-Nov-02															
MW-25D	16-Apr-03					**0.0033**	0.0172	0.0212								
MW-25D	30-Oct-03															
MW-25D	7-Apr-04															
MW-25D	18-Nov-04															
MW-25D	21-Apr-05															
MW-25D	11-Nov-05															
MW-25D	13-Apr-06															
MW-25D	8-Nov-06						0.01									
MW-25D	20-Apr-07															
MW-25D	7-Nov-07						0.01		0.029							0.029
MW-25D	14-May-08			0.0766J			0.0121	0.00418J	0.0356		0.00844J				**0.013J**	0.0204
MW-26	27-May-99					0.0014		0.0306								
MW-26	20-Jul-99							0.0102								
MW-26	4-Aug-99							0.01								
MW-26 (dup)	4-Aug-99							0.0102								
MW-26	30-Nov-99															
MW-26 (dup)	30-Nov-99															
MW-26	5-Apr-00					0.0017		0.0146								
MW-26	15-Dec-00					**0.0018**		0.02								
MW-26	18-Apr-01							0.0109								
MW-26	27-Nov-01							0.0126								
MW-26	4-Apr-02							0.0111								
MW-26	5-Nov-02					0.0016		0.0152								
MW-26 (dup)	5-Nov-02					**0.0018**		0.0154								
MW-26	16-Apr-03					0.0012		0.0165								
MW-26	30-Oct-03					0.0011		0.0278							**0.0405**	
MW-26	7-Apr-04							0.0117								
MW-26	18-Nov-04						0.011	0.023								
MW-26	21-Apr-05															
MW-26	11-Nov-05															
MW-26	13-Apr-06															
MW-26	8-Nov-06															
MW-26	20-Apr-07			0.387	0.001	**0.002**	0.016	0.026	0.356						**0.059**	0.165
MW-26	7-Nov-07								0.012							
MW-26	14-May-08			0.0633J			0.0102	0.0129	0.0573	0.0137	0.0118J	0.0203			**0.0155J**	0.0141

Notes: DUP - Duplicate samples results; D - Deep well

All units are in milligrams per liter (parts per million).

- Indicates results below detection limits

- Concentrations exceeds N.C. Groundwater Standards (2L) or Groundwater Protection Standard

* - Groundwater Protection Standard

J - Indicates the analytical result is an estimated concentration between the Method Detection Limit and the Solid Waste Section Reporting Limit

SWSL - Solid Waste Section Limit

Table 3B
Detected Groundwater Constituents - VOCs
North Wake Lined Landfill

Monitor Well	Sample Date	Acetone	2-Butanone (MEK)	Carbon Disulfide	Chloroform	Chloromethane	4,4'-DDT	Cis-1,2-Dichloroethene	1, 1-Dichloroethane	Endosulfan I	Methylene Chloride	Tetrachloroethene	Toluene	Trichlorofluoromethane
NC2L		**700**	**4200**	**700**	**70**	**2.6**	**0.1**	**70**	**70**	**NE**	**4.6**	**0.7**	**1000**	**2100**
SWSL		**100**	**100**	**100**	**5**	**1**	**0**	**5**	**5**	**NE**	**1**	**1**	**1**	**1**
MW-11	7-Nov-07					0.4J								
MW-11	15-May-08													
MW-11D	7-Nov-07				0.3J	0.2J								
MW-11D	15-May-08				0.31J		0.0297J			0.0096J				
MW-12	7-Nov-07	2.5J	2.9J			0.3J								
MW-12	14-May-08													
MW-12D	7-Nov-07													
MW-12D	14-May-08				0.12J									
MW-13	7-Nov-07		1.6J		0.2J									
MW-13	13-May-08				0.24J									
MW-14	7-Nov-07		1.4J		0.2J							0.2J		
MW-14	13-May-08				0.25J				0.09J			0.13J		
MW-15	7-Nov-07		1.8J			0.3J								
MW-15	13-May-08													
MW-15D	7-Nov-07		2.4J			0.3J								
MW-15D	13-May-08			0.11J										
MW-16	7-Nov-07		1.3J											
MW-16	13-May-08	4.91J											0.22J	
MW-17	7-Nov-07		4.8J			0.4J								
MW-17	13-May-08													
MW-17D	7-Nov-07					1.5J								
MW-17D	13-May-08													
MW-18	7-Nov-07		1.8J		0.2J									
MW-18	13-May-08				0.21J									
MW-19	7-Nov-07		2.2J			0.3J								
MW-19	14-May-08				0.16J							0.12J		
MW-20	7-Nov-07	1.7J	1.7J						0.4J		0.2J	0.5J		0.2J
MW-20	14-May-08				0.17J			0.11J	0.45J			0.58J		
MW-21	7-Nov-07	1.5J	1.4J											
MW-21	14-May-08				0.14J									
MW-21 (dup)	14-May-08													
MW-25	7-Nov-07	1.6J	1.4J											
MW-25	14-May-08													
MW-25D	7-Nov-07	2.1J	2.2J			0.2J								
MW-25D	14-May-08				0.16J									
MW-26	7-Nov-07	4.9J	3.6J			0.3J								
MW-26	14-May-08													

Notes: DUP - Duplicate samples results; D - Deep well

All units are in micrograms per liter (parts per billion).

- Indicates results below detection limits

- Concentrations exceeds N.C. Groundwater Standards (2L) or Groundwater Protection Standard

* - Groundwater Protection Standard

NE - Not Established

J - Indicates the analytical result is an estimated concentration between the Method Detection Limit and the Solid Waste Section Reporting Limit

SWSL - Solid Waste Section Limit

Table 3C
Detected Surface Water Constituents - Metals
North Wake Lined Landfill

Monitor Well	Sample Date	Antimony	Arsenic	Barium	Beryllium	Cadmium	Chromium	Cobalt	Copper	Lead	Nickel	Selenium	Silver	Thallium	Vanadium	Zinc
NC2B		**NS**	**0.05**	**NS**	**0.0065**	**0.002**	**0.05**	**NS**	**0.007***	**0.025**	**0.088**	**0.005**	**0.00006**	**NS**	**NS**	**0.05***
SWSL		**0.006**	**0.010**	**0.1**	**0.001**	**0.001**	**0.01**	**0.01**	**0.01**	**0.01**	**0.05**	**0.01**	**0.01**	**0.0055**	**0.025**	**0.01**
SW-2	31-Oct-95					**0.002**										
SW-2	28-Nov-96			0.025				0.002								0.021
SW-2	21-Apr-97															
SW-2	11-Nov-97															
SW-2	11-May-98															
SW-2	23-Nov-98															
SW-2	14-Apr-99															
SW-2	9-Apr-02															
SW-2	16-Apr-03															
SW-2	29-Oct-03															
SW-2	8-Apr-04															
SW-3	31-Oct-95															
SW-3	27-Nov-96			0.033												0.032
SW-3	21-Apr-97															
SW-3	1-Nov-97															**0.056**
SW-3	11-May-98															
SW-3	23-Nov-98															
SW-3	14-Apr-99															
SW-3	30-Nov-99															
SW-3	6-Apr-00															
SW-3	15-Dec-00															
SW-3	17-Apr-01															
SW-3	29-Nov-01															
SW-3	3-Apr-02															
SW-3	6-Nov-02															
SW-3	15-Apr-03															
SW-3	29-Oct-03						0.0111									
SW-3	8-Apr-04															
SW-4	31-Oct-95						0.013	0.012		0.018						
SW-4	28-Dec-96			0.013				0.002								
SW-4	21-Apr-97															
SW-4	3-Nov-97															
SW-4	11-May-98															
SW-4	23-Nov-98	NS	NS	NS	NS	NS	NS	NS	NS	NS	NS	NS	NS	NS	NS	NS
SW-4	14-Apr-99															
SW-4	30-Nov-99															
SW-4	5-Apr-00															
SW-4	15-Dec-00															
SW-4	17-Apr-01															
SW-4	29-Nov-01															
SW-4	3-Apr-02															
SW-4	6-Nov-02															
SW-4	15-Apr-03															
SW-4	30-Oct-03															
SW-4	7-Apr-04															
SW-4	18-Nov-04					0.001	0.011	0.015								
SW-4	21-Apr-05															
SW-4	11-Nov-05					0.001										
SW-4	13-Apr-06															
SW-4	8-Nov-06															
SW-4	20-Apr-07															0.025
SW-4	7-Nov-07															
SW-4	14-May-08			0.0218J			0.00328J		0.00481J	0.00551J						0.00512J

Table 3C
Detected Surface Water Constituents - Metals
North Wake Lined Landfill

Monitor Well	Sample Date	Antimony	Arsenic	Barium	Beryllium	Cadmium	Chromium	Cobalt	Copper	Lead	Nickel	Selenium	Silver	Thallium	Vanadium	Zinc
NC2B		**NS**	**0.05**	**NS**	**0.0065**	**0.002**	**0.05**	**NS**	**0.007***	**0.025**	**0.088**	**0.005**	**0.00006**	**NS**	**NS**	**0.05***
SWSL		**0.006**	**0.010**	**0.1**	**0.001**	**0.001**	**0.01**	**0.01**	**0.01**	**0.01**	**0.05**	**0.01**	**0.01**	**0.0055**	**0.025**	**0.01**
SW-5	31-Oct-95						0.012									
SW-5	27-Nov-96			0.044				0.002								0.012
SW-5	21-Apr-97															
SW-5	1-Nov-97															0.042
SW-5	11-May-98															
SW-5	23-Nov-98															
SW-5	14-Apr-99															
SW-5	30-Nov-99															
SW-5	6-Apr-00															
SW-5	15-Dec-00															
SW-5	17-Apr-01															
SW-5	29-Nov-01															
SW-5	3-Apr-02					0.001										
SW-5	6-Nov-02					0.001										
SW-5	15-Apr-03					0.001										
SW-5	29-Oct-03					0.001										
SW-5	8-Apr-04															
SW-5	18-Nov-04															
SW-5	21-Apr-05	dry	dry	dry	dry	dry	dry	dry	dry	dry	dry	dry	dry	dry	dry	dry
SW-5	11-Nov-05	dry	dry	dry	dry	dry	dry	dry	dry	dry	dry	dry	dry	dry	dry	dry
SW-5	13-Apr-06	dry	dry	dry	dry	dry	dry	dry	dry	dry	dry	dry	dry	dry	dry	dry
SW-5	8-Nov-06															
SW-5	20-Apr-07	dry	dry	dry	dry	dry	dry	dry	dry	dry	dry	dry	dry	dry	dry	dry
SW-5	7-Nov-07	dry	dry	dry	dry	dry	dry	dry	dry	dry	dry	dry	dry	dry	dry	dry
SW-5	13-May-08		0.00279J	0.203		0.00021J	0.0452	0.0127	**0.0487**	**0.0382**	0.0137J	**0.0237**			0.116	0.0803
SW-6	30-Nov-99															
SW-6	5-Apr-00															
SW-6	15-Dec-00															
SW-6	18-Apr-01															
SW-6	29-Nov-01															
SW-6	4-Apr-02															
SW-6	5-Nov-02															
SW-6	16-Apr-03															
SW-6	30-Oct-03															
SW-6	7-Apr-04													0.011		
SW-6	18-Nov-04															
SW-6	21-Apr-05															
SW-6	11-Nov-05															
SW-6	13-Apr-06															
SW-6	8-Nov-06															
SW-6	20-Apr-07															
SW-6	7-Nov-07															
SW-6	14-May-08			0.0488J			0.00441J		**0.00721J**	0.00671J						0.00576J

Notes: DUP - Duplicate samples results; D - Deep well

All units are in milligrams per liter (parts per million).

- Indicates results below detection limits

- Concentrations exceeds N.C. Surface Water Standards for Class C Waters

* - Action level

J - Indicates the analytical result is an estimated concentration between the Method Detection Limit and the Solid Waste Section Reporting Limit

SWSL - Solid Waste Section Limit

Table 3D
Detected Surface Water Constituents - VOCs
North Wake Lined Landfill

Monitor Well	Sample Date	Acetone	Bromodichloromethane	Bromoform	2-Butanone (MEK)	Carbon Disulfide	Chloroform	Chloromethane	Dibromochloromethane	Cis-1,2-Dichloroethene	1, 1-Dichloroethane	Methylene Chloride	Tetrachloroethene	Toluene	Trichlorofluoromethane
NC2B		**NS**	**NS**	**NS**	**NS**	**NS**	**NS**	**NS**	**NS**	**NS**	**NS**	**NS**	**10.8**	**11**	**NS**
SWSL		**100**	**1**	**3**	**100**	**100**	**5**	**1**	**1**	**5**	**5**	**1**	**1**	**1**	**1**
SW-4	7-Nov-07				1.3J										
SW-4	14-May-08														
SW-5	7-Nov-07														
SW-5	13-May-08	7.75J													
SW-6	7-Nov-07	2.7J			3.1J			0.3J							
SW-6	14-May-08	3.36J	0.27J	0.38J					0.31J					0.12J	

Notes: DUP - Duplicate samples results; D - Deep well

All units are in milligrams per liter (parts per million).

- Indicates results below detection limits

- Concentrations exceeds N.C. Surface Water Standards for Class C Waters

* - Action level

J - Indicates the analytical result is an estimated concentration between the Method Detection Limit and the Solid Waste Section Reporting Limit

SWSL - Solid Waste Section Limit

APPENDIX B

Appendix B - Landfill Gas Control Plan
Contents

Section 1 Introduction 1-1

1.1 Purpose 1-1
1.2 General Characteristics of LFG and Methane Generation 1-1

1.2.1 Decomposition Rate and Volume 1-2
1.2.2 LFG Migration 1-2

Section 2 Regulatory Background 2-1

2.1 Introduction 2-1
2.2 Subtitle D and North Carolina Regulations 2-1
2.3 Clear Air Act 2-2

2.3.1 Summary of the Proposed Regulations 2-2
2.3.2 Compliance 2-3

Section 3 LFG Monitoring System: Design and Installation 3-1

3.1 Summary of Recommendations 3-1
3.2 Well Design & Depth 3-1
3.3 Design 3-6
3.4 Monitoring Equipment Needed 3-6

Section 4 LFG Monitoring Program 4-1

4.1 Frequency of Routine Monitoring 4-1
4.2 Staffing 4-1
4.3 Monitoring Procedures 4-1
4.4 Record Keeping 4-2

Section 5 Contingency Plan 5-1

5.1 Actions If Regulatory Limit is Detected in Structures 5-1
5.2 Actions If Regulatory Limit is Detected at Monitoring Wells 5-2
5.3 Subtitle D Compliance Action Plan 5-2

5.3.1 Immediate Action 5-2
5.3.2 Actions Within Seven Days 5-3
5.3.3 Actions Within Sixty Days 5-3

5.4 Public Relations and Information 5-3

Section 6 Options for Controlling LFG 6-1

6.1 Migration Control Techniques 6-1

6.1.1 Impermeable Physical Barriers 6-1
6.1.2 Passive Removal System 6-1
6.1.3 Active Removal System 6-1
6.1.4 Air Injection 6-2

6.2 Environmental Control Techniques 6-2

6.2.1 Control Through LFG Recovery Systems 6-2
6.2.2 Control Through Flaring LFG 6-3

Section 7 Bibliography 7-1

Appendix B - Landfill Gas Control Plan
List of Figures

Figure

3-1 Typical Methane Gas Monitoring Well Design 3-2

3-2 Gas Well Slotting Detail 3-4

3-3 Guard Post 3-5

Section 1
Introduction

Landfill gas (LFG) is a natural by-product of the anaerobic decomposition of landfilled bio-degradable waste. LFG can present a danger to human health and the environment and therefore must be monitored. For these reasons, LFG is regulated by Federal and North Carolina state legislation. This Plan describes the systems and programs needed to fulfill federal and state regulations concerning LFG. In addition, this Plan describes the characteristics of LFG and its migration patterns; and provides alternative methods to control and destroy its harmful components. This additional background information is presented in the Plan to insure it is readily available should a situation occur that requires information and action beyond that described in this Plan.

1.1 Purpose

This Plan fulfills the requirements set forth in Subtitle D and the North Carolina Solid Waste Management Rules for monitoring and controlling LFG. This Plan:

- describes the necessary LFG monitoring systems,
- sets forth the monitoring procedures and programs, and
- identifies the actions needed if levels of methane exceed regulatory limits.

1.2 General Characteristics of LFG and Methane Generation

Landfill gas (LFG) can be an energy resource as well as a source of environmental pollution. What makes LFG valuable as an energy resource is its methane content. LFG is composed of approximately 50 percent methane in contrast to natural gas which consists of approximately 95 percent methane. LFG programs which focus on recovering gas as an energy resource include collection and extraction systems used to maximize its recovery. What makes LFG a source of environmental pollution is its odor, its potentially explosive properties, and its contribution to global warming. LFG programs which focus on the environmental hazards of landfill gas include collection systems to monitor the migration of gas and control or neutralize its environmental impacts.

LFG is composed of 50 - 55 percent methane (CH_4); 45 - 50 percent carbon dioxide (CO_2); and, less than one percent non-methane organic compounds. These individual gases remain co-mingled and do not naturally separate.

1.2.1 Decomposition Rate and Volume

The decomposition of bio-degradable waste begins with aerobic decomposition that typically lasts three to 18 months until the oxygen in the landfill is depleted. Following this, the anaerobic phase begins which results in LFG production. This anaerobic phase continues until all of the carbon-based materials are broken down or oxygen is reintroduced. Some historical LFG production generation models suggest that LFG generation continues for as long as 20 years. However, recent LFG recovery projects in California have demonstrated that production may continue beyond these 20 year estimates.

A reintroduction of oxygen does not stop the production of LFG, it just retards it. The volume of LFG generated over the life of a landfill is a function of the total volume of organic waste in the landfill as influenced by age, moisture, compaction, and pH.

1.2.2 LFG Migration

The production of LFG creates a positive pressure within the landfill that forces the gas to migrate. LFG is lighter than air and moves upward unless there is a barrier. LFG will move laterally along the path of least resistance or lowest pressure. LFG migration is a function of soil conditions, hydrogeologic conditions, and weather conditions. LFG moves through porous soils, along underground pipes, and through trenches. In some cases the LFG migration path can be observed at the surface through observations of stressed vegetation. In these instances LFG replaces the oxygen in root structures and eventually destroys the plants.

If tightly capped, LFG will move downward or laterally. Unless LFG is collected, it may migrate laterally, off the landfill site. If the landfill does not have an impermeable cover cap, LFG may migrate upward, through the landfill surface and cause odor and air quality problems. The lining and capping of a landfill does not effect the production of gas, it only improves the potential to collect and control it.

Section 2
Regulatory Background

2.1 Introduction

Because of the real and potential dangers from LFG and the methane in landfill gas, to the public health and safety and to the environment, existing and pending federal and state regulations require owners of municipal solid waste landfills (MSWLFs) to monitor and control it. The regulations are contained in Section 258.23 of Subtitle D of the Resource Conservation and Recovery Act (RCRA) and Title 15 A NCAC Subchapter 13 B Section .1626 (4).

Other applicable federal regulations relating to LFG, which come under the Clean Air Act have become law as of early 1996.

2.2 Subtitle D and North Carolina Regulations

Methane gas is explosive when present within the range of five percent to 15 percent by volume in air. When present in concentrations greater than 15 percent, the mixture will not explode. The five percentage mixture is referred to as the Lower Explosive Limit (LEL) while the 15 percentage concentration is referred to as the Upper Explosive Limit (UEL). The State of North Carolina, through its 15A NCAC 13B .1626 (4) (a); and EPA, through the Subtitle D regulations part (a) of Section 258.23 parts (a) and (b) requires owners of operating MSWLFs, by October 9, 1993, to ensure that the facility:

- does not exceed 25 percent of the lower explosive limit for methane in facility structures; and
- does not exceed the lower explosive limit at the facility property boundary.

The lower explosive limit means the lowest percent by volume of a mixture of explosive gases in air that will promulgate a flame at 25^0 C and atmospheric pressure.

Part (b) of Section 258.23 and part (b) of Section .1626 of the North Carolina regulations require that a routine methane monitoring program be implemented to insure that these standards are met. A methane monitoring program typically involves sampling LFG emissions, using a specially designed meter, through a system of strategically located and specifically designed wells, on a regularly scheduled basis. The time and frequency of monitoring must be determined based on soil conditions, hydrogeologic

conditions and hydraulic conditions surrounding the facility, and locations of structures and property boundaries. However, compliance with Subtitle D requires that the minimum frequency of monitoring be quarterly.

Part (c) of Section 258.23 and part (c) of Section .1626 of the North Carolina regulations require that if methane levels exceed the specified limits, the owner or operator must:

- immediately take all necessary steps to ensure the protection of human health;
- immediately notify the State Director (it is assumed that this will be the Director of the North Carolina DSWM);
- within seven days of detection, place in the operating record the methane gas levels detected;
- within seven days of detection, provide a description of the steps taken to protect human health;
- within 60 days of detection, implement a remediation plan for the methane gas release; the plan shall describe the nature and extent of the problem and the proposed remedy;
- within 60 days of detection, place a copy of the plan in the operating record of the landfill; and
- within 60 days of detection, notify the State Director that the plan has been implemented.

2.3 Clean Air Act

On May 30, 1991, EPA proposed new source performance standards (NSPS) and emission guidelines for air emissions from municipal solid waste landfills. These were proposed under Section 111 of the Clean Air Act (CAA) and came into effect in early 1996. The regulations are intended to reduce five health and environmental effects of LFG generated by MSWLFs:

- explosive hazards;
- global warming effects from methane emissions;
- human health and vegetative effects caused by the non-methane organic compounds;
- carcinogenicity and non-cancerous health effects; and
- odor nuisance.

2.3.1 Summary of the Proposed Regulations

The portion of the NSPS that affect MSWLFs are under Section 111(b) and 111(d) of the CAA. The standards and guidelines require the periodic

calculation of an annual NMOC (non-methane organic compound) emission rate at each affected or designed MSWLF facility. The calculation involve the use of a model or formula contained in the regulations. At each facility where the calculated emission rate is equal to or exceeds the regulatory cut off of 150 Mg/yr (167 tpy) of non-methane organic compounds, the MSWLF will be required to design and install a LFG collection system and then combust (with or without energy recovery) the captured LFG. The proposed standards are based on the use of an active collection system (i.e. a system that "actively" or mechanically draws out the LFG) and flares the gas to satisfy a 98 percent destruction criteria. Other control devices will be acceptable if they can demonstrate this level of destruction.

2.3.2 Compliance

On June 10, 1996, Wake County submitted an Initial Design Capacity and NMOC Emission Rate Report Form to the Air Quality Section of North Carolina Division of Environmental Management and is currently awaiting comments. The North Wake Subtitle D Landfill total design capacity was 4,300,000 tons (including the existing unlined landfill area) which exceeds the 2.75 million ton limit imposed by the new regulations. As a results of exceeding the 2.75 million ton threshold, a Title V Permit will be applied for by March 12, 1997.

Section 3
LFG Monitoring System: Design and Installation

The first step needed to meet Subtitle D and North Carolina LFG requirements involves installing a LFG monitoring system. The next step involves implementing a monitoring program. The third step requires developing a plan for the actions that will be taken if monitoring results meet or exceed the regulatory limits. This section describes the proposed monitoring system. Section 4.0 describes the monitoring program. Section 5.0 described the proposed plan for actions.

A monitoring system could consist of trenches, wells, or probes designed and equipped to monitor methane migration and concentration. Portable monitoring equipment is needed to complete the system if it is not installed at the well heads. Equipment can include portable hand-held meters or probes that can be used to measure the level of methane and non-methane trace elements in the LFG.

3.1 Summary of Recommendations

Subtitle D regulations do not provide specific guidance regarding design requirements for LFG monitoring systems. An LFG monitoring system should be constructed in phases as landfill development progresses. System design based on several factors, including: 1) the observation of no visible sign of methane migration, 2) the assumption that the soils in the landfill are fairly uniform in composition and compaction (which would indicate that there is no specific path that the methane would take to migrate away from the site), and 3) the site specific size and logistic layout of the landfill.

3.2 Well Design and Depth

Subtitle D does not provide specifications for either well design or spacing. The state, through the Solid Waste Section, has not formalized well design nor spacing requirements as of this writing.

It is proposed by this report that the well design compliment the standards defined in the CAA regulations. Discussions with state staff indicated that North Carolina is considering following standards similar to those proposed in the CAA. Figure 3-1 shows one option for the proposed design of the methane monitor wells.

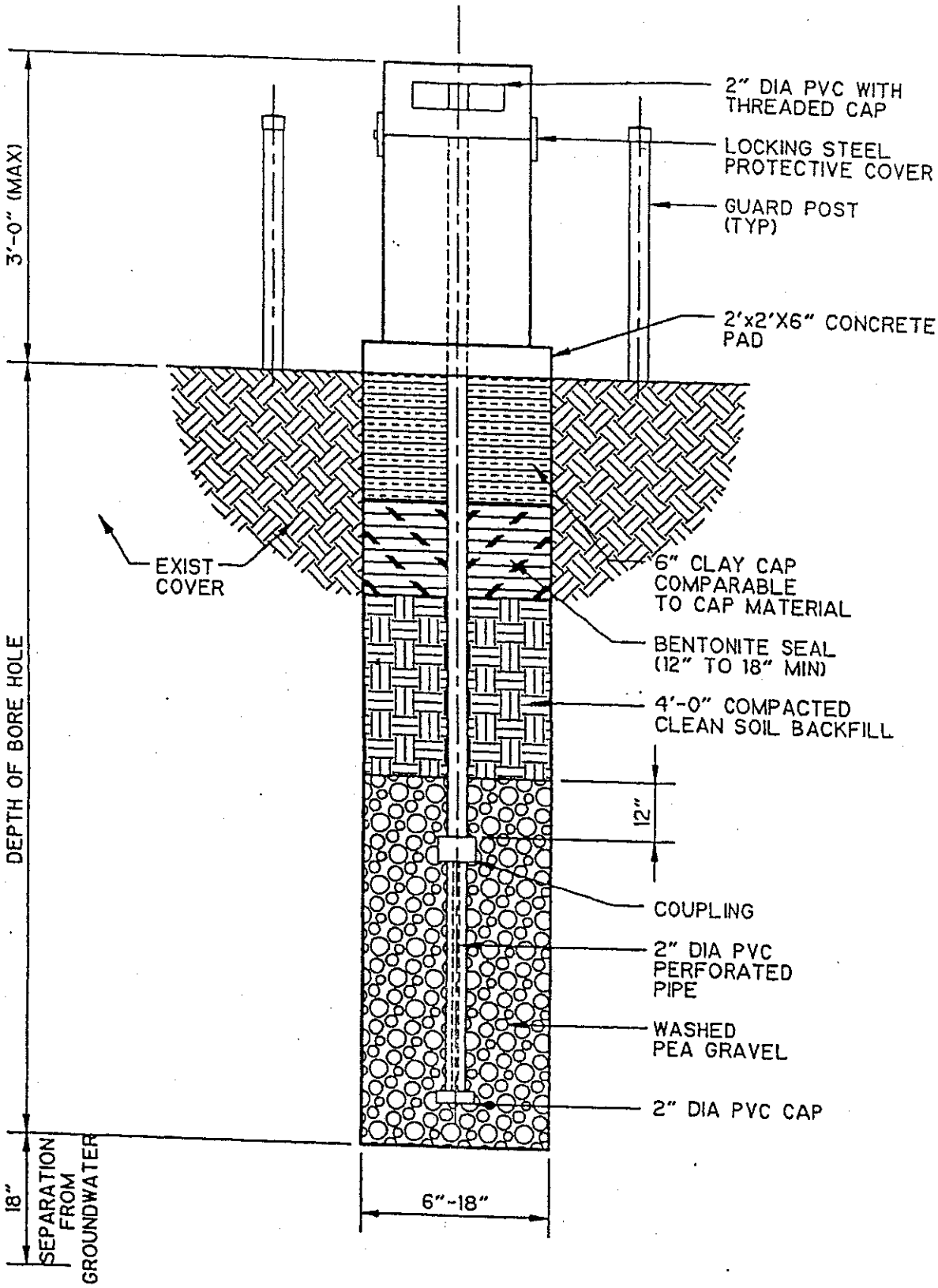

NORTH WAKE SUBTITLE D LANDFILL

TYPICAL METHANE GAS MONITORING WELL DESIGN

CDM
environmental engineers, scientists, planners, & management consultants

Figure No. 3-1

Each well is to be installed using a drill rig to a depth of approximately 18 inches above the seasonal high ground water table. Based on a review of the existing ground water monitoring wells and boring logs, the average depth to the ground water is approximately 20 feet. It is recommended that each well be dug to ground water to insure adequate depth. A pipe, perforated over the bottom two thirds of the well depth will be placed in the center of the well. A minimum requirement for perforations is holes or slots with and open area equivalent to .01-m (1/2 in.) diameter spaced 90 degrees apart every 0.1 to 0.2 m (4 to 8 in.). A detail of the pipe perforations is located on Figure 3-2. Additionally, a detail of the Guard Post at the well head is located on Figure 3-3.

After the pipe is placed in the center of the hole, it is backfilled with pea gravel to a level 0.3 m (one ft) above the perforated section. A layer of back-fill material at least 1.2 m (four ft) thick is added. A layer of bentonite 0.45 m (18 inches) thick is added and the remainder of the hole is backfilled with cover material or material equal in permeability to the existing cover cap material.

3.3 Design

Six monitoring wells have already been installed as part of the Phase I construction. Three additional wells are proposed for a total of nine for the entire North Wake Subtitle D Landfill. Well locations (existing and proposed) are noted on sheet C7 of the facility drawing submitted in February 1993.

3.4 Monitoring Equipment Needed

In order to monitor the methane levels at the wells and inside structures on the landfill, one or more methane monitoring devices will be needed. Several types of meters and monitoring devices are available. One variety of methane monitoring meter is a Gas Tech LEL Meter which sells for approximately $2,000.00. This is designed like a probe which is stuck into a well and the LEL is read. Another type of meter is a hand-held meter, also around $2,000.00, which can be used inside a building to measure the methane level in the room. It is recommended that the County purchase the necessary monitoring meters to measure levels inside structures and to measure levels at well heads.

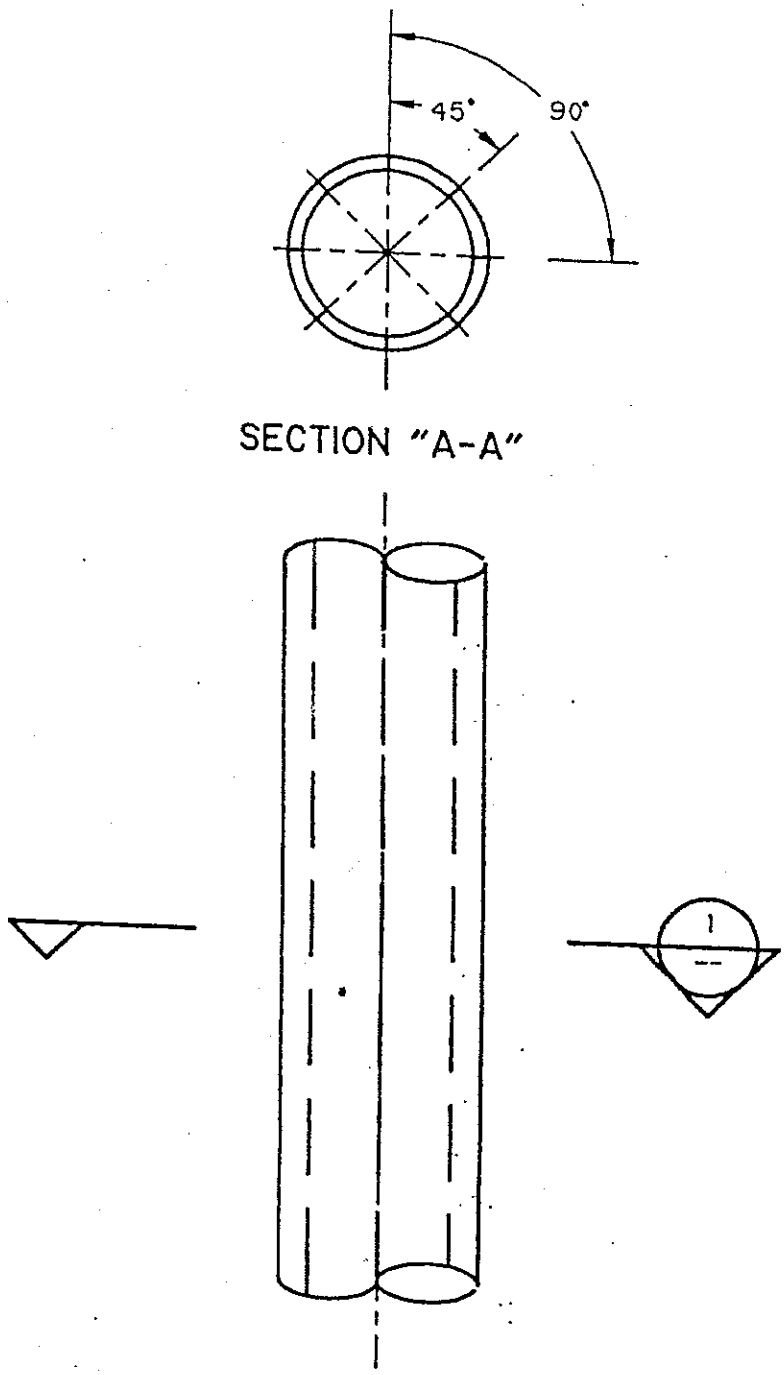

NORTH WAKE SUBTITLE D LANDFILL

GAS WELL
SLOTTING DETAIL

CDM
environmental engineers, scientists, planners, & management consultants

Figure No. 3-2

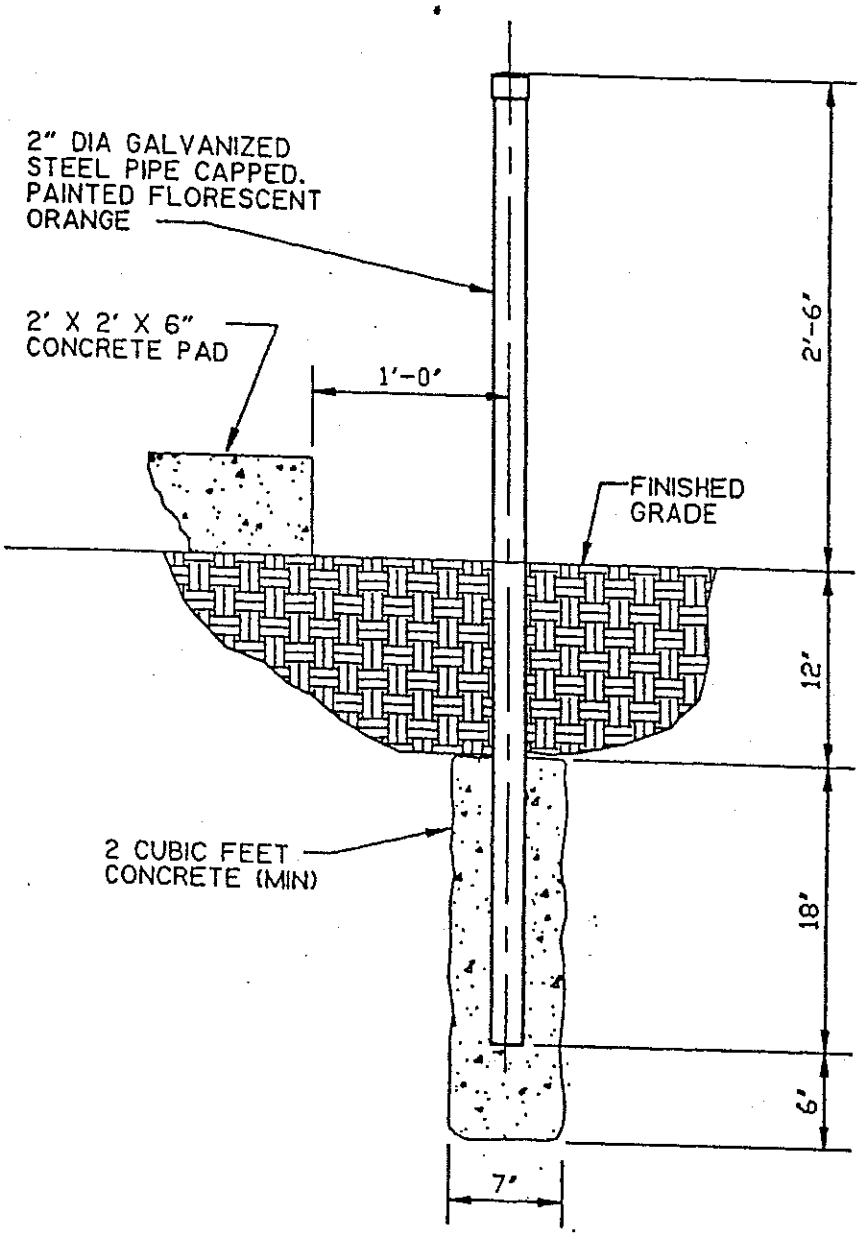

NORTH WAKE SUBTITLE D LANDFILL

CDM
environmental engineers, scientists,
planners, & management consultants

GUARD POST

Figure No. 3-3

Section 4
LFG Monitoring Program

In addition to installing a system of monitoring wells, purchasing monitoring equipment, and budgeting for services, it will be necessary in the future to implement an LFG monitoring program.

A monitoring program, includes a schedule for reading or monitoring LFG emission levels at designated locations on a regular basis and a system for reporting the concentration levels.

The requirements for regularly reading the emission levels, and the plan for actions if readings exceed safe levels should, at a minimum, be based on compliance with state and federal regulations. The plan that is recommended in this report exceeds the regulatory criteria to further protect the health and safety of nearby residents.

4.1 Frequency of Routine Monitoring

Subtitle D regulations require quarterly monitoring of methane beginning October 9, 1993. It is recommended that a quarterly methane monitoring program be implemented when the site opens and continue throughout the active life of the site. Monthly or more frequent monitoring may become necessary if levels are close to the regulatory levels or demonstrate a pattern which is approaching this limit.

4.2 Staffing

Monitoring should consist of having a trained technician use calibrated equipment designed to determine the level of methane escaping the landfill through monitoring wells and inside structures on the landfill site.

The job of monitoring the methane levels will require a trained staff person. Available options include training an existing staff person, hiring a special contractor, or hiring part-time staff to perform this task.

4.3 Monitoring Procedures

Each regular quarterly monitoring procedure should begin by checking methane levels in the scale-house and any occupied structure on the landfill site. Next, the non-occupied buildings at the landfill should be checked. Finally, monitoring wells at the facility property boundary should be checked.

If the methane levels detected within on-site buildings are greater than 25 percent of the lower explosive limit, the technician shall immediately follow the actions presented in Section 5.1 of this report. If methane levels detected

at the wells at the facility property boundary exceeds the lower explosive limit, the technician shall immediately follow the action plan presented in Section 5.2.

4.4 Record Keeping

All readings will be recorded on a standard methane monitoring log form. A sample methane monitoring log is provided at the end of this section. These forms will be reviewed and initialed by the landfill supervisor or the County's Environmental Consultant and then placed in the landfill operating records. These quarterly methane monitoring logs will remain on file at the landfill with other landfill records. These readings should be available for review by EPA and the State upon request.

METHANE MONITORING LOG FORM
(this report must be completed quarterly)

North Wake Subtitle D Landfill
Wake County, North Carolina

Technician Name: _____

Date: (mo/day/year) _____

General weather conditions: _____

Temperature: _____

Barometric condition pressure: _____

MONITORING INSTRUCTIONS

1. Measure methane levels within structures on the landfill property. The landfill gas reading must not exceed 25% of the methane lower explosive limit (L.E.L). If methane measurements exceed 25% of the L.E.L., contact the landfill supervisor and follow the outlined plan in Appendix B of the operations manual.

2. Measure methane levels at all nine methane monitoring wells located around the landfill boundaries. The landfill gas reading must not exceed 100% of the methane L.E.L. If methane measurements exceed 100% of the L.E.L., contact the landfill supervisor and follow the outlined plan in Appendix B of the operations manual.

3. Complete the entire data sheet located on the reverse side.

4. If methane levels exceed the above-mentioned levels at any monitoring location, report the measurements to the Environmental Consultant.

5. File this methane monitoring log sheet in the landfill office in the appropriate record keeping section with other landfill records.

(over)METHANE MONITORING DATA SHEET

Monitoring Locations	% L.E.L. Reading	Within Compliance		Landfill Supervisor Contacted		Monitoring Point
		Yes	No	Yes	No	
Scale house						
Admin. bldg.						
Drop-off facility						
Convenience Center						
Field service bldg.						
Methane well-1						
Methane well-2						
Methane well-3						
Methane well-4						
Methane well-5						
Methane well-6						
Methane well-7						
Methane well-8						
Methane well-9						
Comments and Observations:						
Landfill Supervisor Actions Taken:						

Section 5
Contingency Plan

Both Subtitle D and the North Carolina Solid Waste Management Rules require and a contingency plan for action if methane levels exceed the regulatory concentration limits. The plan for action includes the specific step by step actions needed should regulatory limits be detected.

5.1 Actions if Regulatory Limits Detected in Structures

If any structures on the landfill property measures a methane level equal to or more than 25 percent of the LEL the following actions should be taken:

- the building should be immediately evacuated
- the landfill supervisor should be immediately contacted
- all individuals in and around the structure should be ordered to immediately stop smoking
- all space heaters and similar appliances should be immediately disconnected from their power source
- all doors and windows in the structure which gave the reading should be opened to permit the methane to escape
- as a precautionary measure, the landfill operator will open doors and windows in all structures on the landfill property
- equipment used to take the readings should be tested immediately to verify it was giving accurate readings

The technician will then proceed to take readings at all methane monitoring wells at the landfill. All levels should be verified and recorded in the methane monitoring log book. This information, including the verification that the equipment is providing accurate readings, the current readings, and the levels at all monitoring locations for the previous three quarters should be provided to the County's landfill supervisor. The Wake County landfill supervisor will make the decision to return to business as usual; temporarily evacuate the site; or follow the plan proposed in Section 5.3.

5.2 Actions if Regulatory Limits Detected at Monitoring Wells

If any of the methane monitoring wells measure a level equal to or more than the lower explosive limit as defined by Subtitle D, the technician should:

- immediately contact the landfill supervisor
- recheck the methane levels inside the facility structures. (If levels are close to or exceed 25 percent of the lower explosive level the actions in Section 5.1 should be followed.)

Once it is verified that levels inside the buildings are safe, the technician should check and record readings at all remaining methane monitoring wells on the site.

- the equipment used to take the readings should be tested to verify it is giving accurate readings

This information, the current readings, and the levels for the previous three quarters should be provided to the Wake County landfill supervisor who will make the decision to: return to business as usual; temporarily evacuate the site; or, follow the plan proposed in Section 5.3.

5.3 Subtitle D Compliance Action Plan

If upon verification as described in Sections 5.1 and 5.2, the methane monitoring levels are equal to or exceed the regulatory limits as defined by Subtitle D, the following actions are proposed to both comply with Subtitle D regulations as well as protect the health and safety of the individuals at or near the landfill site.

5.3.1 Immediate Action

If methane levels exceed the specified limits, the landfill operator or the landfill supervisor will take immediate action to ensure the protection of human health and safety. This will include:

- evacuate all buildings on the site;
- open all doors and windows in buildings on the landfill site;
- notify the Wake County Manager Office's about the concentration levels;
- if warranted by the degree of intensity of the methane concentration, check the methane levels in structures near the landfill yet outside the facility boundary;

- if warranted by the degree of intensity of the methane concentration, evacuate the landfill area or evacuate the area adjacent to the landfill;
- notify the State Director of the Subtitle D compliance program about the reading;
- begin to identify or narrow down the source of the methane causing the readings exceeding the regulatory limits (i.e. the path that the methane is taking to the monitoring location);
- begin to identify the extent of the methane problem;
- as appropriate, begin to take corrective action to control the methane levels in building at the landfill site, at the boundaries to the landfill, and at the landfill site.

5.3.2 Actions Within Seven Days

If methane levels exceed the regulatory limits, in order to comply with Subtitle D, the County must take the following actions within seven days:

- place in the operating records of the landfill, the gas levels detected; and,
- provide a description to the approved state or federal EPA agency a description of the steps taken to protect human health.

It is also suggested that at this time, the operator begin to develop a plan which:

- describes the nature and extent of the problem and
- proposes the remedy for the problem.

5.3.3 Actions Within Sixty Days

If methane levels exceed the specified limits, the County must take the following actions within 60 days:

- implement a remediation plan for the methane gas release;
- place a copy of the plan in the operating record of the landfill;
- notify the appropriate State Director or EPA official that the plan has been implemented.

5.4 Public Relations and Information

As with any potentially dangerous situation, it is important to keep the public, public service agencies, and the media informed. False information, inaccurate information, or the lack of information concerning potential explosions at a public facility could create panic.

If the County Manager determines that a potentially dangerous situation exists, it is recommended that a one page explanation of the situation be written and distributed to all homes and businesses within a one-half mile radius of the landfill. This should be done within the first two to four hours of making the determination that a potential danger to human health and safety exists.

It is recommended that the County Manager appoint one individual to provide information to: the media; the police authorities with jurisdiction in the area; and area medical facilities. Area hospitals and police departments may receive calls once the local media releases the story. Centralizing the flow of information will avoid conflicting information and inaccurate information. Providing detailed and honest facts about the situation being under control, is critical.

Section 6
LFG Collection System Monitoring and Maintenance

When LFG collection system additions are connected to the existing system, the system additions will be subjected to a testing/monitoring/balancing program. Once steady state conditions are achieved, the following routine monitoring activities will be performed:

- The LFG collection system will be inspected to check for damage, leaks, etc. on a weekly basis, or more frequently if required.
- LFG quality, pressure, temperature and flow measurements will be taken at individual wellfield features (wells, collectors, headers, etc.) on a monthly basis, or more frequently if required. Field equipment will be kept calibrated, per the manufacturers' recommendations.
- The LFG extraction rates from individual wells and collectors will be adjusted based on monitoring results to address issues such as surging vacuum, decreased methane content, increased oxygen content, high temperature, and high or low flows.
- On a weekly basis, the condensate management system will be inspected to verify proper operation (e.g. check for blockages, leaks, liquid levels and surging), as indicated by system performance.
- The LFG blower/flare station will be inspected weekly to verify proper operation. Operating conditions will be recorded and kept on file.
- Mechanical and electrical components of the condensate management system and blower/flare station (e.g., pumps, blowers, compressors, burners, controls, etc.) will be maintained and serviced in accordance with the manufacturers' recommendations. Vendor O&M manuals, which include start-up, shut-down, and troubleshooting procedures and sequences, will be maintained on file.
- Non-routine maintenance requirements, such as replacement of valves, ports, piping, wells and traps, will be performed as required by system performance.

LFG collection system monitoring and maintenance will be performed by an operator assigned to the site on a part-time basis. The LFG system operator will be on-call 24 hours a day to respond to non-routine O&M requirements.

The LFG system operator will be notified via an autodialer connected to the system control panel of system shut down or improper operations.

Section 7
Bibliography

Clinton, Michael and Roquetta, Alex. "The Landfill Technician," Municipal Solid Waste Management Magazine, July/Aug, 1992.

EPA, Air and Energy Engineering Research Laboratory, Research Triangle Park, Landfill Gas Energy Utilization:Technical Options and Case Studies, June 1992.

EPA, Clean Air Act, Section 111, May 30 , 1991, proposed new source performance standards.

EPA, Subtitle D, Solid Waste Disposal Facility Criteria, Final Rule, October 9, 1991.

Energy Tactics, Electric Power for Landfill Gas, N.Y., N.Y., August, 1992.

GRCDA/SWANA, Publication # GR-LG 0301, Landfill Gas Management: Control, Recovery, and Utilization, Volume 2, Selected Papers from 1987 - 1990, 247 pp, published 1991.

Khalil, M.A.K. and R. A. Rasmussen. Constraints on the Global Sources of Methane and an Analysis of Recent Budgets. Tellus, 42 B 229-236, 1990.

O'Leary, Philip, Sanitary Landfill Leachate and Gas Management, Seminar Documents, December 3 - 6, 1991.

Poland, Ronald, Collection System for Landfill Gas, Recovery and Control, One Size May Not Fit All, Waste Management, Inc, Chicago, Ill. 1991.

Thorneloe, Susan, EPA, Landfill Gas Recovery, Utilization Options and Economics, Presented at the 16th Institute of Gas Technology, March 5, 1992.

Thorneloe, Susan, EPA, Global Emissions and Control, Landfill Gas Utilization, presented at the 2nd U.S. Conference on Municipal Solid Waste Management, June 3 - 5, 1992.

Thorneloe, Susan, EPA, Paper presented at the EPA Symposium on Greenhouse Gas
Emissions and Migration Research, August 18 - 20, 1992.

RESTROOM BUILDING

GAS VENTING DETAILS

SHEETS BD-001 & BD-002

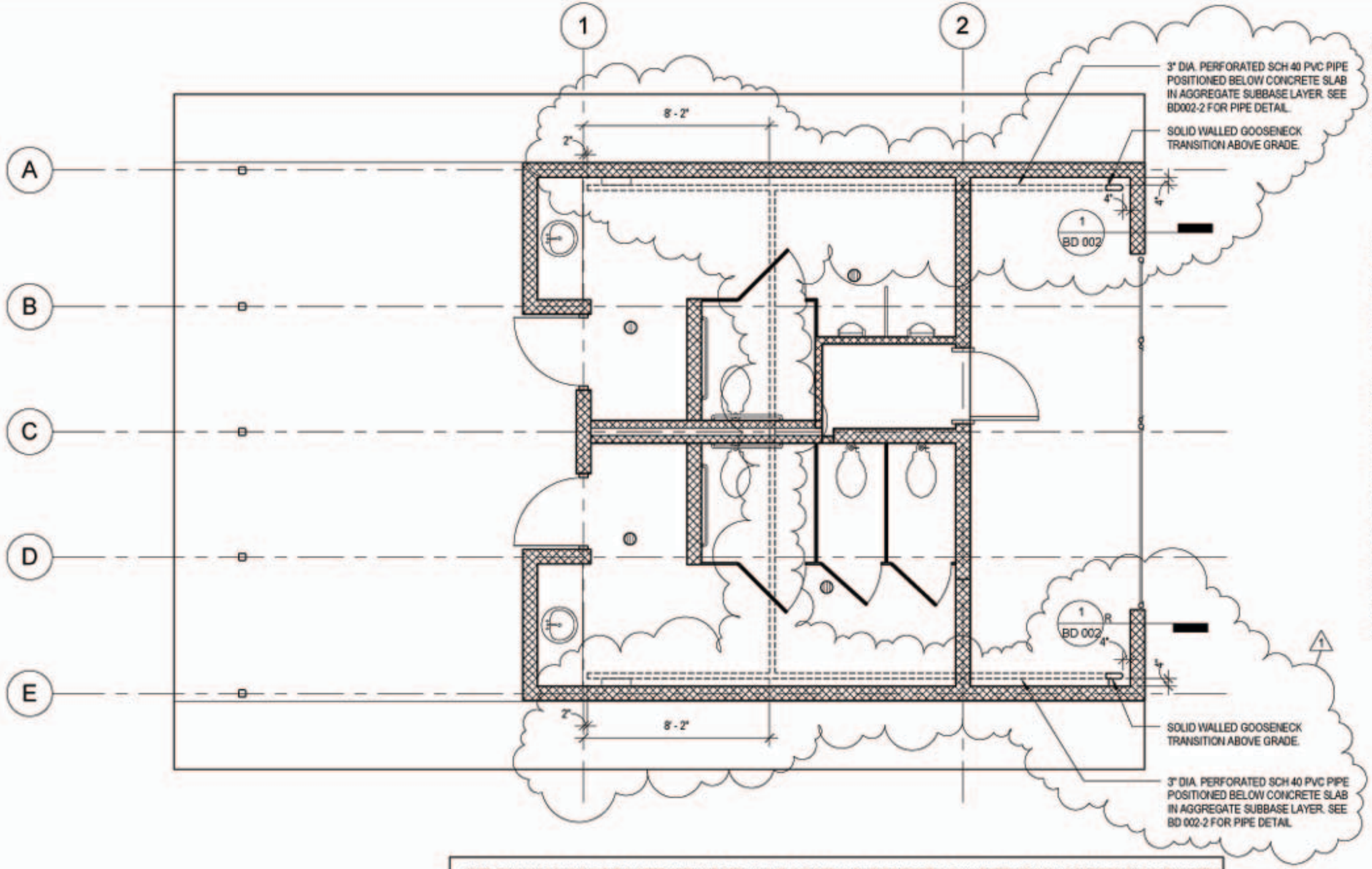

NOTE: DRAWINGS SHOWING THE SLOTTED METHANE PIPE LAYOUT, AND METHANE VENT PIPE DETAILS HAVE BEEN DRAWN AS DIRECTED BY SCS ENGINEERS OF POWHATAN, VIRGINIA. CHERRY HUFFMAN ARCHITECTS PA ASSUMES NO RESPONSIBILITY FOR THESE DETAILS COMPOSING THE METHANE VENTING SYSTEM FOR THIS PROJECT.

FIRST FLOOR-METHANE PIPE LAYOUT

1 / BD 001 1/4" = 1'-0"

NORTH WAKE COUNTY LANDFILL PARK- TOILET BUILDING

ADDENDUM #1 - METHANE PIPE LAYOUT

REF. DRAWING: A401

3/24/2009 1:57:28 PM

BD 001

CHERRY HUFFMAN ARCHITECTS PA
135 E. Martin Street, Suite 101
Raleigh, North Carolina 27601
919.821.0601 919.821.0720 F
www.cherryhuffman.com

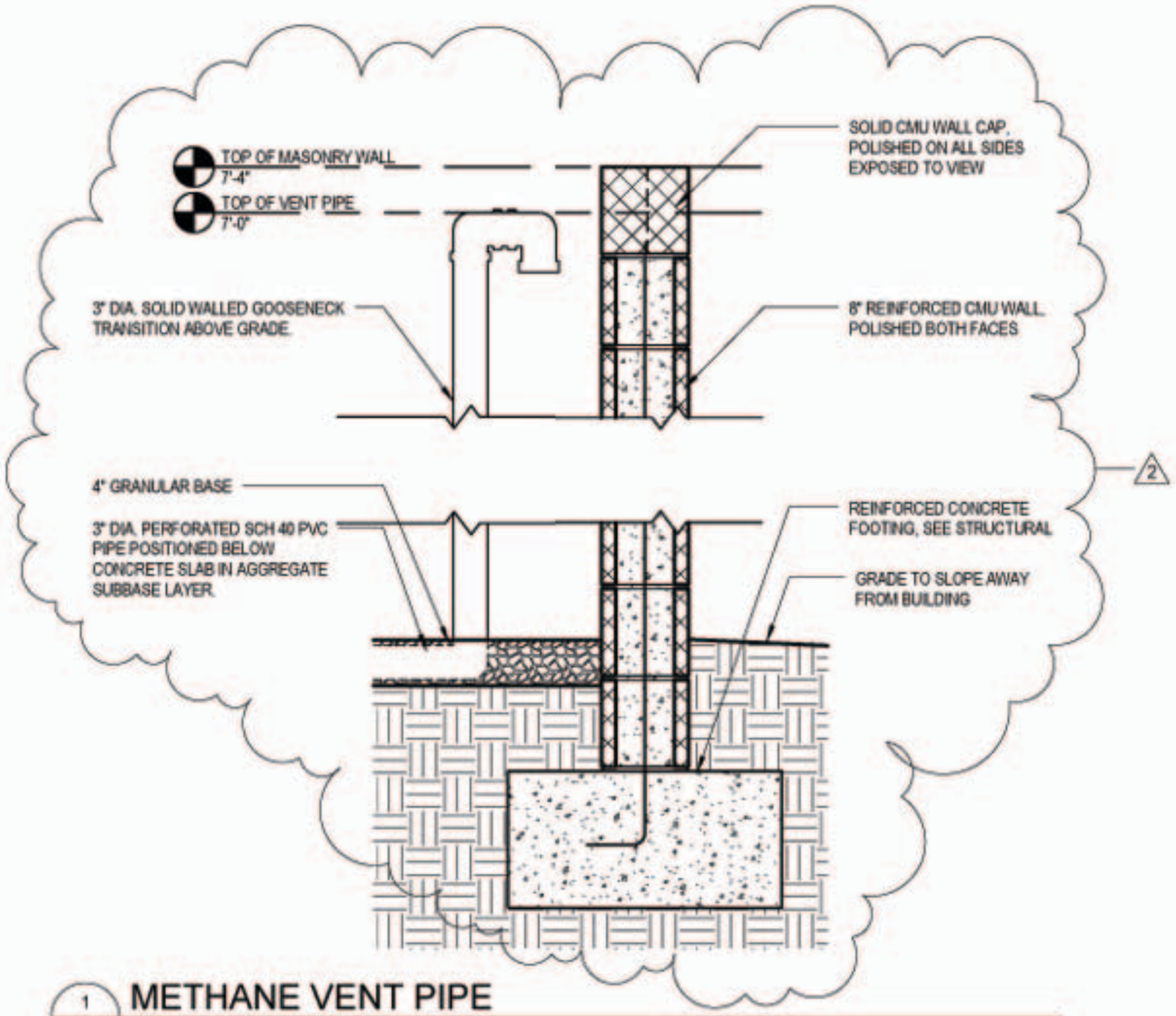

1 BD 002 METHANE VENT PIPE
1" = 1'-0"

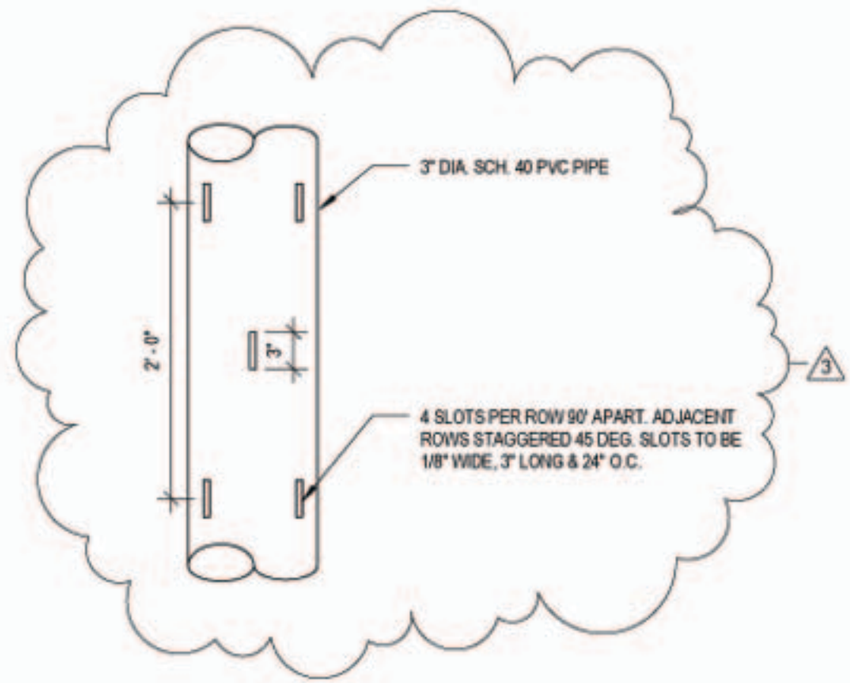

2 BD 002 SLOTTED PIPE
1" = 1'-0"

NOTE: DRAWINGS SHOWING THE SLOTTED METHANE PIPE LAYOUT, AND METHANE VENT PIPE DETAILS HAVE BEEN DRAWN AS DIRECTED BY SCS ENGINEERS OF POWHATAN, VIRGINIA. CHERRY HUFFMAN ARCHITECTS PA ASSUMES NO RESPONSIBILITY FOR THESE DETAILS COMPOSING THE METHANE VENTING SYSTEM FOR THIS PROJECT.

3/24/2009 1:57:42 PM

NORTH WAKE COUNTY LANDFILL PARK- TOILET BUILDING

ADDENDUM #1 - METHANE VENT DETAILS
REF. DRAWING: A401

BD 002

CHERRY HUFFMAN ARCHITECTS PA
135 E. Martin Street, Suite 101
Raleigh, North Carolina 27601
919.821.0061 919.821.0720
www.cherryhuffman.com

APPENDIX C

Contents

List of Sheets

Section 1 Introduction 1-1

1.1 Purpose 1-1
1.2 Scope 1-1

Section 2 Geologic Setting 2-1

2.1 Geology 2-1
2.2 Hydrogeology 2-1

Section 3 Proposed Groundwater Monitoring Network 3-1

3.1 Monitoring Well Locations 3-1
3.2 Monitor Well Installation and Construction 3-1
3.3 Hydraulic Conductivity Testing 3-3
3.4 Surface Water Quality Monitoring Plan 3-3

Section 4 Sampling and Analysis Plan 4-1

4.1 Introduction 4-1
4.2 Groundwater and Surface Water Sample Collection. 4-1
4.3 Sample Preservation and Shipment 4-5
4.4 Analytical Procedures 4-5
4.5 Chain-of-Custody 4-6
4.6 Quality Assurance/Quality Control 4-7

Section 5 Statistical Evaluation 5-1

5.1 Method of Analysis 5-1
5.2 Background Well to Compliance Well Comparisons 5-2
5.3 Analysis of Variance 5-2
5.4 Tolerance Intervals 5-2
5.5 Results/Reporting Requirements 5-3
5.6 Detection of Elevated Constituent Levels 5-3

List of Sheets

Sheet

3-1 Water Quality Monitoring Plan . . . . . Pocket

Section 1
Introduction

1.1 Purpose

The purpose of this Water Quality Monitoring Plan is to address the requirements in Rule .1623(b)(3), and to present a plan for groundwater and surface water monitoring for the North Wake Subtitle D Landfill, Cells 5-11. The Water Quality Monitoring Plan includes information on the proposed groundwater monitoring network, surface water monitoring plan, sampling and analysis requirements, and detection monitoring requirements. The groundwater monitoring network was designed based on information obtained from recent and previous subsurface investigations and a review of literature pertaining to regional geology and groundwater resources. A detailed discussion of the geological and hydrogeological conditions at the site is presented in both the Site Plan Application and the Design Hydrogeologic Report.

1.2 Scope

The Water Quality Monitoring Plan includes the following elements, in accordance with Rules .1630 through .1637 of the North Carolina Administrative Code:

- Design and installation of a groundwater monitoring system, based on site-specific information, to yield groundwater samples from the uppermost aquifer that represents the quality of the background groundwater that has not been affected by landfill activities or other man-made activities.

- Design and installation of groundwater monitoring system, based on site-specific information, to yield groundwater samples from the uppermost aquifer that represent the quality of groundwater passing the relevant point of compliance.

- Monitor wells designed and constructed in accordance with the applicable North Carolina Well Construction Standards as found in 15A NCAC 2C.

- A Sampling and Analysis Plan that includes procedures and techniques for sample collection, sample preservation and shipment, analytical procedures, chain-of-custody procedures, and quality assurance and quality control.

- A statistical analysis methodology to be applied to the groundwater monitoring data in order to evaluate and demonstrate compliance with the groundwater performance standards, once sufficient analytical data is collected.

Section 2
Geologic Setting

The North Wake Subtitle D Landfill expansion is located off Durant Road north of Raleigh, North Carolina. The landfill expansion site (Cells 5-11) consists of 43 lined acres. The site consists of moderate slopes and has been cleared during construction of Cells 1-4.

2.1 Geology

The Geologic Map of North Carolina shows the site to be located within the Raleigh Belt and is underlain by a mica gneiss unit of Cambrian to Late Proterozoic age. Additional mapping by Horton and others (1992) have included bedrock at the site as part of the Raleigh gneiss, which they state is equivalent to the injected gneiss and schist described by Parker (1979). The Raleigh gneiss is mainly a heterogeneous gneiss composed of interlayered biotite gneiss and hornblend-biotite gneiss.

The residuum soils (saprolite) generally consist of fine to coarse-grained sand, silt, sandy silt with trace clay, interbedded with sand lenses. The unconsolidated soils extend from ground surface to depths ranging from 13 to 70 feet. The saprolite grades into partially weathered rock (PWR). PWR was encountered in the borings as indicated by a blow count greater than 50 blows per six inch interval. The thickness of saprolite and PWR was greatest in upland areas, and least in the bottom of secondary drainage features. PWR was generally less than five feet in thickness. Depth to bedrock, defined as depth to auger refusal, ranges from 13 feet to 70 feet below ground surface. The top of bedrock is a subdued reflection of surface topography.

2.2 Hydrogeology

As with bedrock, the potentiometric surface is a subdued reflection of surface topography. As discussed in the Design Hydrogeologic Report, groundwater flow in the Cell 5-11 area is generally towards the north/northeast with discharge to the creek which bounds the site to the north. Groundwater flow greatly influenced by the drainage feature which bisects the central portion of the site. To a less extent, groundwater flow direction is also influenced by the drainage feature located to the west of Cells 5-11. These drainage features are an important target for groundwater monitoring.

Section 3
Proposed Groundwater Monitoring Network

This section presents the proposed groundwater monitoring network for Cells 5-11 Area. Section 3.1 presents proposed monitoring well locations, Section 3.2 discusses monitoring well installation and construction specifications, Section 3.3 discusses hydraulic conductivity testing of the monitoring wells, and Section 3.4 is the surface water quality monitoring plan.

3.1 Monitoring Well Locations

The SWS regulations require that upgradient monitoring well(s) be located so that groundwater samples collected from the uppermost aquifer provide an indication of background groundwater quality. The downgradient monitoring wells must represent groundwater quality at the relevant point of compliance. The wells must be located in similar geologic units so that upgradient and downgradient groundwater quality data can be compared. An approved groundwater monitoring system for Cells 1- 4 has already been installed. The proposed groundwater monitoring system presented in this report for Cells 5 -11, was designed in conjunction with the existing monitoring well network.

As the groundwater beneath the site is a three dimensional system, both nested background and point of compliance wells were installed as part of the monitoring well network for Cells 1-4. Nested pairs are also proposed for Cells 5-11. In most locations across the site, groundwater is encountered above the bedrock surface in sufficient thickness so that a shallow monitoring well can be completed in the saprolite or PWR zone. The zone should be of sufficient thickness to account for seasonal fluctuations in the water table. At monitoring well location MW-19, if bedrock is encountered at a depth that does not allow the well to be completely screened within the saprolite/PWR zone, then the well will be screened across the bedrock/soil interface. A shallow bedrock monitoring wells at monitoring well location, MW- 22D, will target the shallowest water-bearing fracture zones encountered. Drilling observations and air lift yield tests will be utilized to identify fractured zones.

The five new monitoring wells for proposed groundwater monitoring system for Cells 5-11 are shown in Sheet 3-1. The existing wells for Cells 1-4 are also shown on this sheet. This sheet shows the individual cells of the entire landfill and the relationship of the monitor wells to the cells. All wells are anticipated to be installed in the uppermost aquifer as it occurs within the saprolite, except for MW-22D which will be installed in the upper fracture zone of the bedrock aquifer.

3.2 Monitor Well Installation and Construction

The monitoring wells will be constructed in accordance with standard industry procedures and will meet the requirements of 15A NCAC 2C. The monitoring wells at locations of potentially saturated saprolite or PWR will be installed by advancing the borehole through the water table using hollow-stem augering techniques. Soil samples will be collected at five-foot intervals with a split spoon sampler in accordance with ASTM D-1586. Soil lithology will be described in the field by an onsite geologist to develop a borehole log. If saturation conditions are not evident upon refusal of hollow stem auger drilling, then a temporary well screen will be placed in the hole for a period up to 48 hours to determine whether the well will make water.

If no saturation is expected or encountered during hollow stem auger drilling, then the shallowest well will be installed in the upper portion of the bedrock aquifer utilizing air rotary drilling techniques. During air rotary drilling, drilling observations will be recorded by an onsite geologist, including observed fractures and lithological descriptions from cuttings. Drilling will proceed until the first water-bearing fracture is encountered. Upon observing a fracture (an evident drop of the drill rod and/or a change in drill chatter), then an air lift yield test will be conducted. The drill rod will be raised at least 10 feet, and operations will cease for a period of 30 minutes. After the 30 minute period, the drill rod will be lowered to the bottom of the hole, and air will be blown for a period of 10 minutes. The amount of water coming from the hole at this time (if any) will be estimated in gallons per minute. If the borehole is dry, then the drill rig will be moved approximately 20 feet, and the above procedure repeated.

The monitoring wells will be constructed using 2-inch ID PVC well casing with threaded flush joints. The shallow monitoring wells will be constructed with fifteen feet of 0.010-inch slot screen at the end of the casing string placed so that it brackets the water table. The deeper monitoring well at each nested pair location will be constructed with a ten foot screen interval. The PVC casing string will extend approximately two feet above ground surface. A sand pack will be placed around the screen interval to a maximum of two feet above the top of the screen. A two foot thick bentonite seal consisting of hydrated bentonite pellets will be placed on top of the sand to hydraulically seal the completion interval. The remainder of the annulus will be sealed with a bentonite-Portland cement grout to ground surface. A protective outer casing with a lockable cap will be placed over the PVC casing and into the grout, extending 2.5 to 3 feet below ground surface.

Following completion, the monitor well will be developed to remove the residual effects of drilling. The well will be developed using a combination of surging and overpumping. All drilling and downhole equipment will be decontaminated by steam cleaning between borings. All well casing will also be decontaminated by steam cleaning. Well development equipment will be decontaminated by washing

in a non-phosphate detergent solution followed by a potable water rinse, then a distilled water rinse, and allowed to air dry.

The horizontal location of all new monitor wells will be surveyed in State Plane Coordinates by a Registered Land Surveyor to the nearest 0.1 foot. The vertical control or elevation of the top of PVC casing (the well measuring point) will be surveyed to the nearest 0.01 foot accuracy to mean sea level (msl). The height of the well measuring point above ground surface will be measured.

3.3 Hydraulic Conductivity Testing

Following installation and development of the new monitor wells, the hydraulic conductivity of the aquifer material surrounding each well will be determined by conducting slug falling head and/or recovery tests on each well. During drilling operations, where possible, saturated saprolite samples will be collected for laboratory testing of porosity.

3.4 Surface Water Quality Monitoring Plan

The surface water monitoring locations were approved in the Water Quality Monitoring Plan for Cells 1-4. No modifications are proposed to the Surface Water Quality Monitoring Plan. These sampling locations are shown on Sheet 3-1.

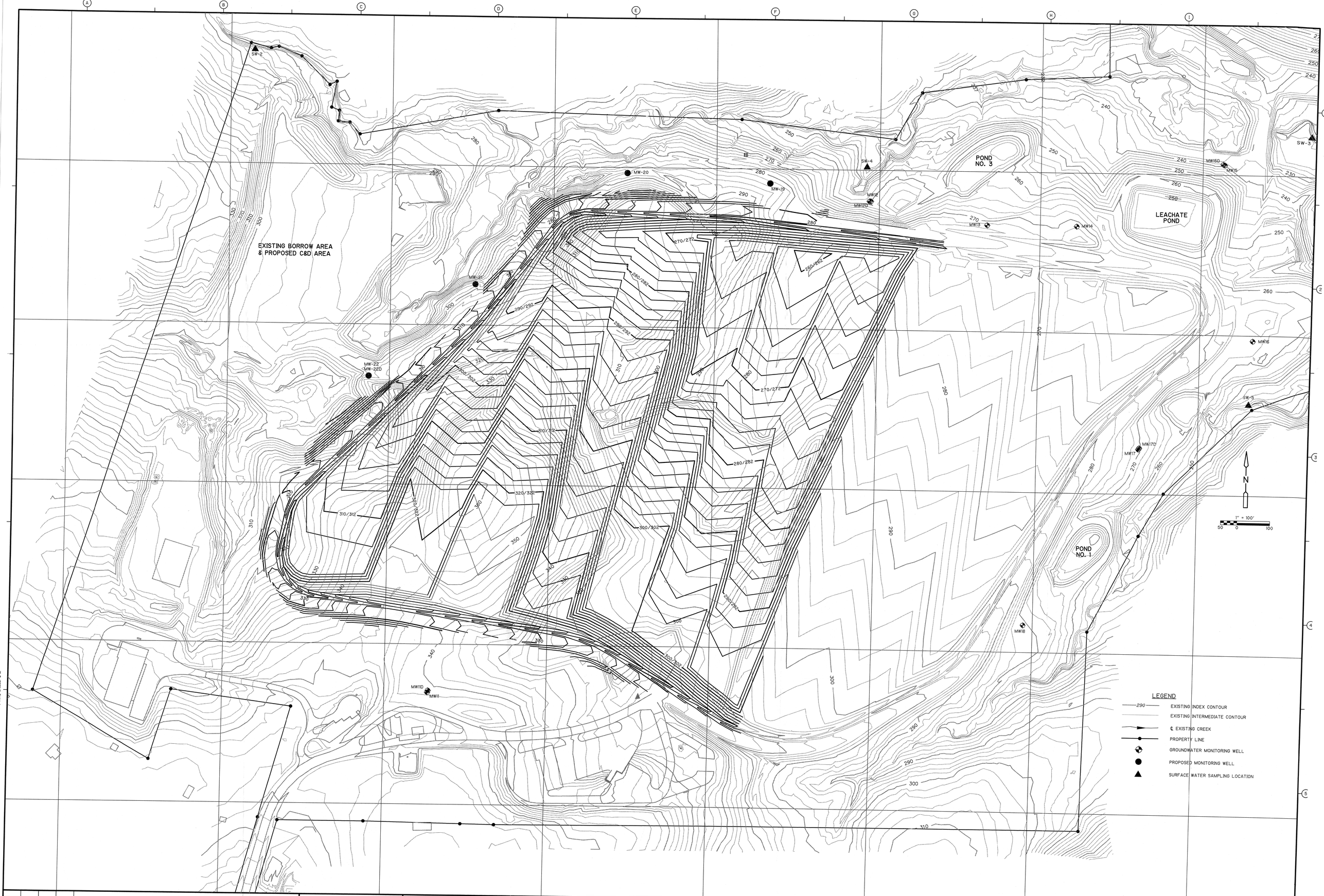

REV. NO.	DATE	DRWN	CHKD	REMARKS

DESIGNED BY: T. GRANT
DRAWN BY: J. KILLINGSWORTH
SHEET CHK'D BY:
CROSS CHK'D BY:
APPROVED BY:
DATE: JULY 1996

CDM Camp Dresser & McKee
environmental services
offices worldwide
5400 Glenwood Avenue, Suite 300
Raleigh, North Carolina 27612
Tel: (919) 787-5620 Fax: (919) 781-5730

WAKE COUNTY
NORTH CAROLINA

NORTH WAKE LANDFILL

WATER QUALITY MONITOR PLAN

PROJECT NO. 6172-60
FILE NAME: FIGURE

SHEET NO.
3-1

Section 4
Sampling and Analysis Plan

4.1 Introduction

Rule .1632 (a) specifies that the owner/operator must provide, as part of the groundwater monitoring program, a groundwater and surface water sampling and analysis (S&A) plan. The S&A plan should be designed to provide accurate results of groundwater quality at the upgradient and downgradient sampling locations. The S&A plan will address the following subjects:

- Groundwater sample collection
- Sample preservation and shipment
- Analytical procedures
- Chain-of-custody
- Quality assurance/quality control (QA/QC)

4.2 Groundwater and Surface Water Sample Collection

Upon completion of well construction, development, and a well stabilization period, the sampling plan will be instituted. Groundwater samples will be collected from each of the monitoring wells and from the surface water sampling locations. The proposed frequency of sampling will include one sample to be collected from each monitoring well prior to the facility receiving waste and three additional samples within six months of issuance of the Permit To Operate as required by Rule .1633(b). These samples will comprise the baseline sampling for statistical analysis. Groundwater samples from each of the monitoring wells will be sampled on a semi-annual basis. Surface water samples will be collected on a semi-annual basis only.

Static Water Level Measurements

Static water level elevations will be measured prior to any purging or sampling activities. Static water level data will be used to monitor changes in site hydrogeologic conditions. The following measurements will be recorded in a dedicated field book prior to sample collection:

- Height of the well measuring point above ground surface
- Depth of water in the well from the TOC measuring point (to the nearest 0.01 foot)
- Total depth of the well
- Height of the water column in the well casing

An electronic water level indicator will be used to accurately measure water elevations to within 0.01 foot within the same day in as short a period of time as possible. Each well will have a permanent, easily identified reference point from which all water level measurements will be taken. The reference point will be

marked and the elevation surveyed by a North Carolina Registered Land Surveyor.

Detection of Immiscible Layers

USEPA's Technical Manual for Solid Waste Disposal Facility Criteria outlines specifications for groundwater sampling and analysis. One of these specifications outlines the establishment of provisions for detecting immiscible fluids, if applicable. Typically, immiscible fluids are categorized as either, (1) light, non-aqueous phase liquids (L-NAPLs), or (2) dense, non-aqueous phase liquids (D-NAPLs). L-NAPLs are more commonly referred to as "floaters" due to their relatively lighter specific gravity, while D-NAPLs are typically referred to as "sinkers" due to their relatively denser specific gravity.

In most instances, the probability of immiscible fluids being present and subsequently detected in groundwater monitoring wells surrounding sanitary landfills is somewhat remote because chemical products (such as industrial solvents) are not accepted for storage or disposal at Subtitle D solid waste management facilities. However, for those rare instances where a separate immiscible phase is believed to be present, EPA suggests that provisions for detecting these types of fluids should be developed.

The following procedure is proposed to address these concerns in the event that the SWS ever requires this test to be performed. In those instances where the monitoring well's screened interval encompasses the water table surface, the ability to detect and sample light nonaqueous phase liquids (LNAPLs) prior to implementation of routine groundwater sampling activities may exist. To accomplish this objective, a transparent teflon or disposable bailer will be lowered into the well to just below the water table surface. The bailer will then be removed from the well and the contents examined to identify if any immiscible fluids are present. If any immiscible fluids are determined to be potentially present, an interface probe is proposed to be used. The depth of the light phase immiscible layer as determined by the interface probe, will then be recorded in a field logbook. The interface probe will continue to be lowered until it intersects the groundwater table surface. The depth of the organic/water interface zone also will be recorded. From these two measurements, the thickness of the light phase immiscible layer can be readily determined.

The potential presence of dense phase immiscible layer will be determined by the examination of laboratory analytical results. Analytical results above a percentage of a given chemicals solubility limit can indicate the potential presence of DNAPLs.

As mentioned above, monitoring for immsicible phase fluids is not envisioned to be performed during typical sampling events, but is provided here to document how the test will be performed if the SWS requires it at a future date.

Monitoring Well Evacuation

Following measurement of the static water level in all of the wells, individual wells will be purged of all stagnant water. The stagnant water, which is not representative of true aquifer conditions, will be removed to ensure that fresh formation water can be sampled. A minimum of three well casing volumes will be removed prior to sampling the well. The well volume for 2-inch diameter wells will be calculated using the following equation: one well volume in gallons equals the height of the water column (in feet) times 0.1632 (slightly less than 0.5 gallons per foot water for 3 casing volumes). Because aquifer formations onsite are relatively low-yield, the well will be purged in such a way that water is removed from the bottom of the screened interval. During the well purging process, field measurements (pH, temperature, and specific conductance) will be collected at regular intervals, and reported in a tabular format. The well will be purged until field measurements stabilize within approximately 10 percent between subsequent readings or until the well is dry. Stabilization of these measurements will indicate that fresh formation water is present in the well. Field measurements of pH, temperature, and conductivity, will be obtained by using a Corning Check Mate Combination Water Quality Meter or equivalent. If the well is purged to dryness, the samples will be collected after a sufficient volume of water has entered the well to allow collection of the sample. Wells will be purged using a decontaminated teflon bailer with new nylon rope or an acceptable pumping device approved by the SWS. Field measurements collected during purging activities will be recorded in the field logbook.

Sample Collection

After purging activities are complete, groundwater samples will be collected for laboratory analysis. The wells will be sampled using laboratory decontaminated teflon bailers equipped with new nylon rope. Bailers will be used for one well only. Field decontamination of bailers will not be permitted. If disposable bailers are used, they will be constructed of teflon and certification of decontamination will be provided. Disposable bailers will only be used if laboratory decontaminated standard teflon bailers or dedicated sampling systems are not available. The bailers will be lowered slowly into the well to minimize sample agitation. Sample water will be placed directly into sample bottles provided by the analytical laboratory, using the following method:

1. Retrieve bailer and slowly transfer sample water to the appropriate sample container. The bailer should not be allowed to touch the sample container.

2. The sample container for the volatile organic compounds should be filled first, leaving no headspace or air bubbles. The container should then be tightly sealed. The sample container may have preservative added by the laboratory or preservative may be added in the field before closing the sample container.

3. The sample container for the metals should then be filled. This container should be filled to the bottle shoulder and have head space to allow for preservative addition.

Surface water samples will be obtained from areas of minimal turbulence and aeration. The following procedure will be implemented regarding sampling of surface waters:

1. Hold the bottle near the bottom with one hand, and with the other, remove the cap.

2. Push the sample container slowly into the water and tilt up towards the current to fill. A depth of about six inches is satisfactory. Avoid breaching the surface while filling the container.

3. The container should be moved slowly, in a lateral direction, if there is little current movement.

4. If the stream depths are too shallow to allow submersion of the sample container, a pool may be scooped out of the channel bottom and allowed to clear prior to sampling.

5. Lift the container from the water and place the uncontaminated cap on the container.

The wells and surface water stations will be sampled in the order of potential for increasing contamination levels beginning with the upgradient (background) sampling locations. The individual water samples will be collected, bottled and preserved (as necessary) in the order of parameter volatility. The collection order for the samples will be as follows:

- Volatile organic compounds (VOCs)
- Total metals.

The samples will be transferred from the sampling equipment directly into a prepared sample container provided by the laboratory. Field filtering of samples is not permitted. There will be a specific size and type of container provided for each constituent to be analyzed. For VOC analysis, the containers provided will be 40-ml glass vials. For metals analysis, the samples will be collected in 1-liter HDPE bottles. Extra containers will be provided in case of accidental breakage. All field personnel will wear protective latex disposable gloves in order to prevent extrinsic contamination from clothing, body oils, dirt, and other various contaminants. Sample documentation requirements to ensure sample integrity, will included sample locations, date and time of sample collection, proper analysis, and preservative (if applicable).

Decontamination Procedures

All sampling and purging equipment that will come in contact with the well casing and water will be decontaminated per specifications in the North Carolina Water Quality Guidance Document for Solid Waste Facilities. All sampling equipment will be laboratory cleaned. The following decontamination procedures will be used for teflon sampling equipment as outlined in the North Carolina Water Quality Monitoring Guidance Document for Solid Waste Facilities:

1. Clean item with tap water and phosphate-free laboratory detergent (Liquinox or equivalent), using a brush if necessary to remove particulate matter and surface films.

2. Rinse thoroughly with tap water

3. Rinse with 10% nitric or 10% hydrochloric acid.

4. Rinse thoroughly with deionized or distilled water and allow to air dry

5. Rinse thoroughly with high grade isopropanol and allow to air dry

6. Rinse with deionized or distilled water and allow to air dry

7. Wrap with aluminum foil, if necessary, to prevent contamination of equipment during storage or transport.

4.3 Sample Preservation and Shipment

In order to ensure sample integrity, preservation and shipment procedures will be carefully monitored. Generally, ice and chemical additives will be used as sample preservatives, as recommended by the commercial laboratory. For VOC analysis, hydrochloric acid will be used as the preservation method as well as maintaining the samples at a temperature of 4°C. Nitric acid will be used as the preservative for samples needing metals analysis. If the analytical laboratory is located some distance from the site, samples shall be shipped via a 24-hour delivery service to ensure holding times are not exceeded. Shipment of samples will be coordinated with the laboratory. Proper storage and transport conditions must be maintained in order to preserve the integrity of the sample. Once taken, samples will be placed on ice and cooled to a temperature of 4°C. Samples are to be packed in coolers so as to inhibit breakage or accidental spills. Custody seals will be placed on the outside of the cooler, in a manner to detect tampering of the samples. The laboratory shall immediately notify the owner/operator of any samples that arrive with custody seals broken.

4.4 Analytical Procedures

The samples taken from each well and from the surface water sampling locations will be analyzed for the constituents listed in 40 CFR Part 258, Appendix 1. The

analytical procedures for the indicated parameters will be conducted using the following methods:

Analysis	EPA Method Number
Volatile organic compounds	8260
Total metals	In accordance with SWS policy at the time of sampling.

4.5 Chain-of-Custody

It is imperative that an accurate record of sample collection, transport, analysis, and disposal be maintained and documented. Therefore, chain-of-custody procedures will be instituted and followed throughout the sampling program. It is necessary to establish documentation to trace sample possession from the time of collection until disposal. The chain-of-custody program shall include the following requirements:

- Samples shall be accompanied by a chain-of-custody record that notes the date and time of collection as well as sampling personnel.
- All samples shall be properly labeled to prevent misidentification of samples.
- Field notes shall be included to provide pertinent information about each sample.
- A sample analysis sheet shall accompany all samples to the laboratory.
- Sample custody seals shall be used to indicate any tampering of samples.
- All records pertaining to the shipment of a sample shall be retained (freight bills, post office receipts, and bills of lading).

The laboratory shall not accept samples for analysis without a correctly prepared chain-of-custody form. The laboratory shall be responsible for maintaining chain-of-custody of the sample(s) from time of receipt to disposal. The chain-of-custody form shall be signed by each individual who possesses the samples.

To prevent sample misidentification, a label will be affixed to each sample container in a manner as to prevent the label from becoming dislodged during transport which will contain the following information:

- Sample identification number
- Name and signature of sample collector

- Name and signature of sample collector
- Date and time of collection
- Place of collection
- Parameters requested

In addition the container itself should be labeled with the sample identification number, at a minimum, to allow for identification should the label fall off.

4.6 Quality Assurance/Quality Control

The reliability and validity of the field and analytical laboratory data will be monitored as part of the QA/QC program used in the laboratory. Field duplicates and sample blanks will be collected to check sampling protocol and to account for any changes that occur after sampling. The QA/QC program will stipulate the use of standards, laboratory blanks, and duplicates for identification of matrix interferences.

Field Duplicates

Field duplicates provide a measure of field and laboratory precision. Field duplicates will be collected from identical locations using proper sampling procedures. The duplicate samples will be collected at a frequency of one per day per sampling event.

Equipment Rinsate Blanks

To evaluate the effectiveness of the decontamination procedures, equipment rinsate blanks will be collected. The sample will be collected by passing distilled water through the sampling equipment after decontamination has been completed. Equipment blanks will be collected at a minimum of one per day of groundwater sampling activities.

Trip/Travel Blanks

A trip/ travel blank shall be prepared to account for any sample contamination that may occur during transport to and from the site. The sample will be prepared in the laboratory with deionized or distilled water and shall accompany the sample shipping container to the field. The trip/travel blank shall remain unopened until receipt by the lab for analysis. One trip blank per sampling event will be collected.

Section 5
Statistical Evaluation

The North Carolina SWS requires that the owner or operator of a landfill specify a statistical method outlined in .1632(g) to evaluate groundwater monitoring data. The goal of the statistical analysis is to determine whether statistically significant evidence of contamination exists and to identify the point of contamination. The North Carolina Solid Waste Management Rules provide several methods for statistical analysis of groundwater data. These methods are:

1. Parametric analysis of variance (ANOVA)
2. Rank based (non-parametric) ANOVA with multiple comparisons
3. Tolerance prediction interval
4. Control chart
5. An alternative statistical test method that meets the performance standards of Rule .1632(g).

Statistical evaluation of monitoring data will be performed for the duration of the monitoring program, including the post-closure care period. This section proposes a valid statistical approach to meet the SWS requirements. The choice of an appropriate statistical test depends on the type of monitoring, the nature of the data, and the proportion of values in the data set that are below detection limits. The statistical analysis will be conducted separately for each constituent in each well. The statistical method is based on the EPA's Statistical Analysis of Groundwater Monitoring Data at RCRA Facilities, Interim Final Guidance Document (1989).

5.1 Method of Analysis

The statistical evaluation of the groundwater analytical data will involve comparisons of analytical data obtained from the background (upgradient) well and analytical data obtained from the compliance (downgradient) wells. The EPA recommends the Analysis of Variance (ANOVA) method for statistical evaluation when the amount of analytical data is limited. Since the proposed North Wake Landfill is a new facility, the ANOVA method will compensate for the limited availability of data. As more data becomes available, a tolerance interval approach may be used for the compliance wells. If at any time during monitoring activities, more than 50 percent of the data values are below the detection limit, comparison analysis will be conducted using a test of proportions.

5.2 Background Well to Compliance Well Comparisons

For this monitoring plan, the relevant data comparison will be between background well data and compliance well data. The data from the compliance wells will be statistically analyzed against the background well to determine any statistical evidence of exceedances of the groundwater standards. In some instances, an intrawell comparison will be used.

Since the ANOVA method has been chosen for the initial statistical data analysis, the assumption of equal variance and normality within the data must be confirmed. Normality of the concentration data will be checked by calculating the coefficient of variation of the data. Bartlett's test will be used to determine the variance equality. Data sets that do not follow a normal distribution will be transformed to a log normal distribution.

Once more data becomes available, a tolerance level approach may be used. The tolerance level method uses background well data to define tolerance limits for comparison with compliance well data.

5.3 Analysis of Variance

The methods by which contaminants travel in groundwater allow for the assumption the concentration levels in individual wells will not change equally. Contamination from a landfill can be compared as differences in average concentration at each well. These differences can be accurately detected by the ANOVA method. For the parametric one-way analysis of variance to yield reliable results, a minimum number of observations are required. It is recommended that data sets from at least two or more wells be used in the comparisons. It is also required that each well have a minimum of three data sets. The monitor wells will be sampled once prior to the facility receiving wastes and three additional times within six months of receiving the Permit To Operate to achieve the required number of data sets and to account for seasonal variations of groundwater chemistry. The analysis will be performed for a 5 percent significance level.

5.4 Tolerance Intervals

The tolerance interval will be developed based on background well data. The compliance well data will be compared to the tolerance interval. Compliance well data that fails to fall within the tolerance interval indicates statistically significant evidence of contamination. A sample size of eight or more results will be used to define the tolerance interval. Tolerance levels will be developed assuming that the data or the transformed data are normally distributed. The tolerance interval will include a coverage percentage of 95. A confidence level of 95 percent will also be used during the tolerance level analysis.

5.5 Results/Reporting Requirements

In accordance with Rule .1632(j), within 14 days of completing the statistical analysis for the analytical data from groundwater samples, a report shall be submitted to the SWS which includes the following information.

- Field observations related to the condition of the monitoring wells
- Field data
- Laboratory data
- Statistical analysis
- Sampling methodologies
- Quality assurance/quality control data
- Information on groundwater flow
- Wells with constituents exceeding groundwater standards or show a statistically significant increase over background
- Other pertinent information

5.6 Detection of Elevated Constituent Levels

If upon completion of sampling and statistical analysis, it is determined that a statistically significant increase over background for one or more of the metals listed in Appendix 1 exists, or, if concentrations are elevated above the maximum concentration level (MCL) or practical quantification limit (PQL) for any volatile organic compound (VOC) listed in Appendix 1 at any monitoring well or surface water sample at the site's boundary, then:

(1) The county will notify the SWS within 14 days of this finding,

(2) Place a notice in the operating record within 14 days of this finding indicating which constituent(s) have demonstrated a statistically significant change from background,

(3) Resample the monitoring well(s) in question within 30 days of this finding for Appendix 1 constituents to determine the validity of the data; and

(4) An assessment monitoring program shall be establish within 90 days of determination of a statistical increase or exceedance of the NC Groundwater Standards.

(5) Demonstrate successfully to the SWS (through certification by a qualified groundwater scientist) that a source other than the MSWLF unit caused the contamination, or that the statistically significant increase resulted from error in sampling, analysis, statistical evaluation or natural variation in groundwater quality.

The actions outlined above are proposed to be implemented if contaminants are detected. Final actions will be mandated by direction of the North Carolina SWS.