Wilson, Donna

From: Brinchek, W. Michael (Mike) [BrinchekWM@cdm.com]
Sent: Thursday, April 23, 2009 4:09 PM
To: Donna Wilson
Cc: Ed Mussler; Eric.Staehle@co.wake.nc.us; John Roberson; jbeal@co.wake.nc.us; Brian Starkey; Buckley, J. Brenan; Brossoie, Robert
Subject: RE: North Wake Landfill post-closure plan
Attachments: Permit Modification Final.pdf

<<Permit Modification Final.pdf>> Donna,

Attached is a pdf of CDM's responses to your comments below. We will submit a hard copy for your files as well. If you have any questions, please contact me at your earliest convenience.

Regards,

Mike

-----Original Message-----
From: Donna Wilson [mailto:Donna.Wilson@ncmail.net]
Sent: Thursday, April 16, 2009 4:10 PM
To: Brinchek, W. Michael (Mike)
Cc: Ed Mussler
Subject: North Wake Landfill post-closure plan

Michael - I've completed review of the North Wake Landfill post-closure plan modifications. Please address the following comments/questions:

1. Please provide a drawing showing the groundwater monitoring wells, methane monitoring wells, and surface water monitoring points with the post-closure land use plans.
2. What controls are in place to keep people off the side slopes? It appears that the public can go around the fencing. Will there be fencing along the bottom of the side slope to prevent public access?
3. Surface water monitoring was not mentioned in the post-closure monitoring. Please clarify.
4. The post-closure plan should include periodic camera inspection of the leachate system.
5. Please explain if the projects are planned to be developed in Phases, with which portions completed in each phase.
6. Please address methane monitoring in enclosed buildings, such as bathrooms.
7. What are the pavilions to be constructed on top of the landfill? Is it a covered structure? How will these be constructed/anchored into the landfill cap? What is the shelter to be constructed on top of Area D? Will exhibits, benches, or other features be anchored into the cap? How will fence posts be anchored into the landfill cap?
8. What will be the thickness of cover on top of the landfills that are accessible to the public?
9. Will the leachate clean-outs and sumps be secured from public access?
10. It is recommended that post-closure certifications be sent in

every 5 years, instead of just at the end.

If you have any questions, please let me know.
Thanks, Donna Wilson

--
Donna J. Wilson
Environmental Engineer
Solid Waste Section/Division of Waste Management NC DENR
1646 Mail Service Center
Raleigh NC 27699-1646
Phone 919-508-8510
Section webpage - http://wastenotnc.org/swhome

E-mail correspondence to and from this address may be subject to the North Carolina Public Records Law and may be disclosed to third parties.

CDM

5400 Glenwood Avenue, Suite 300
Raleigh, North Carolina 27612
tel: 919-325-3500
fax: 919-781-5730

April 23, 2009

Ms. Donna J. Wilson
Environmental Engineer
North Carolina Department of Environmental and Natural Resources
Division of Waste Management
Permitting Branch, Solid Waste Section
1646 Mail Service Center
Raleigh, NC 27699-1646

Subject: Wake County, North Carolina
North Wake Landfill Phase 2 Closure
Post Closure Permit Modification – Response to Comments

Dear Ms. Wilson:

On behalf of Wake County, CDM is pleased to submit revisions to the Post Closure Permit Modification per your review comments received via e-mail on April 16, 2009. For your convenience, CDM has formatted this letter correspondence to present your comment followed immediately by our response in *italics*.

General

1. Please provide a drawing showing the groundwater monitoring wells, methane monitoring wells, and surface water monitoring points with the post-closure land use plans.

   Attachment 1 includes the following:

   - *Drawing LA-2 – a plan showing how all groundwater and methane monitoring wells and surface water monitoring points align with the proposed Phase 1 development; and*

   - *Figure 1 – Detail – D - a detail showing the flush mounted monitoring well detail for monitoring wells MW-13 and MW-14, which are within the paving limits of the proposed Phase 1 of development.*

2. What controls are in place to keep people off the side slopes? It appears that the public can go around the fencing. Will there be fencing along the bottom of the side slope to prevent public access?

Within the proposed Phase 1 construction limits, a wooden guide rail will be installed around the perimeter access road between the perimeter access road and the landfill perimeter channel per Detail 7/LA-21 of Attachment 2. The same wooden guide rail will be installed around the viewing area at the top of the landfill as shown on Sheet LA-9 of Attachment 2. In addition to the fencing the County will post signage along both guide rails prohibiting public access onto the landfill sideslopes.

3. Surface water monitoring was not mentioned in the post-closure monitoring. Please Clarify?

   Refer to the revised Post Closure Permit Modification, under Section 2.2.4 (Attachment 4). Section 2.2.4 reads, "Surface water monitoring will continue to occur semi-annually for the duration of the post closure period in accordance with the Water Quality Monitoring Plan in the approved North Wake Landfill – Phase II Permit Renewal Application, Amended March 1997.

4. The post-closure plan should include periodic camera inspection of the leachate system.

   Section 2.2.2, Paragraph 2 (Attachment 4) reads "Inspection of the collection lines will be performed concurrent with the annual cleaning service."

5. Please explain if the projects are planned to be developed in Phases, with which portions completed in each phase. Please address methane monitoring in enclosed buildings, such as bathrooms.

   Monitoring of wells and onsite buildings will be conducted as described in the Landfill Gas Control Plan previously included in Appendix B of the Operation Plan of the , North Wake Landfill – Phase II Permit Renewal Application, Amended March 1997. Additionally the foundation of the restroom facility will be vented per the Sheets BD 001 and BD 002 (Attachment 3).

6. What are the pavilions to be constructed on top of the landfill? Is it a covered structure? How will these be constructed/anchored into the landfill cap? What is the shelter to be constructed on top of Area D? Will exhibits, benches, or other features be anchored into the cap? How will fence posts be anchored into the landfill cap?

   The pavilions to be constructed on top of the landfill are viewing areas and will consist of vegetated planting areas, a gravel cul-de-sac, gravel paths, wooden guide rails, and benches as shown in the attached Sheet LA-9. The guide rails and benches are the only structures that will require anchoring. Both of which will be anchored using the same

method as detailed in the attached detail 7/LA-21. Guide rail posts and benches are to be located in an area with an increased minimum cap thickness of 4 feet, such that the 18-inch-thick protective cover is not in impacted by the post.

7. What will be the thickness of cover on top of the landfill that are accessible to the public?

   The minimum cap thickness will be 4 feet in areas where the public will be allowed to access.

8. Will the leachate clean-outs and sumps be secured from public access?

   The leachate clean-outs are secured by flanged end caps and the sumps are secured by manhole covers.

9. It is recommended that post-closure certifications be sent in every 5 years, instead of just at the end.

   Section 2.2.8 of the Post Closure Permit Modification (Attachment 4) has been revised such that certifications verifying post-closure care will be performed every five years in accordance with the post-closure plan; signed by a Professional Engineer, Licensed in the State of North Carolina in lieu of at the completion of the post-closure care period.

If you have any questions or need additional information, please do not hesitate to call me at (919) 787-5620.

Very truly yours,

W. Michael Brinchek, P.E.
Camp Dresser & McKee

Enclosures
cc: J. Beal, Wake County
J. Roberson, Wake County
E. Staehle, Wake County
B. Starkey, OBS
B. Brossoie, CDM
B. Buckley, CDM

Attachment No. 1

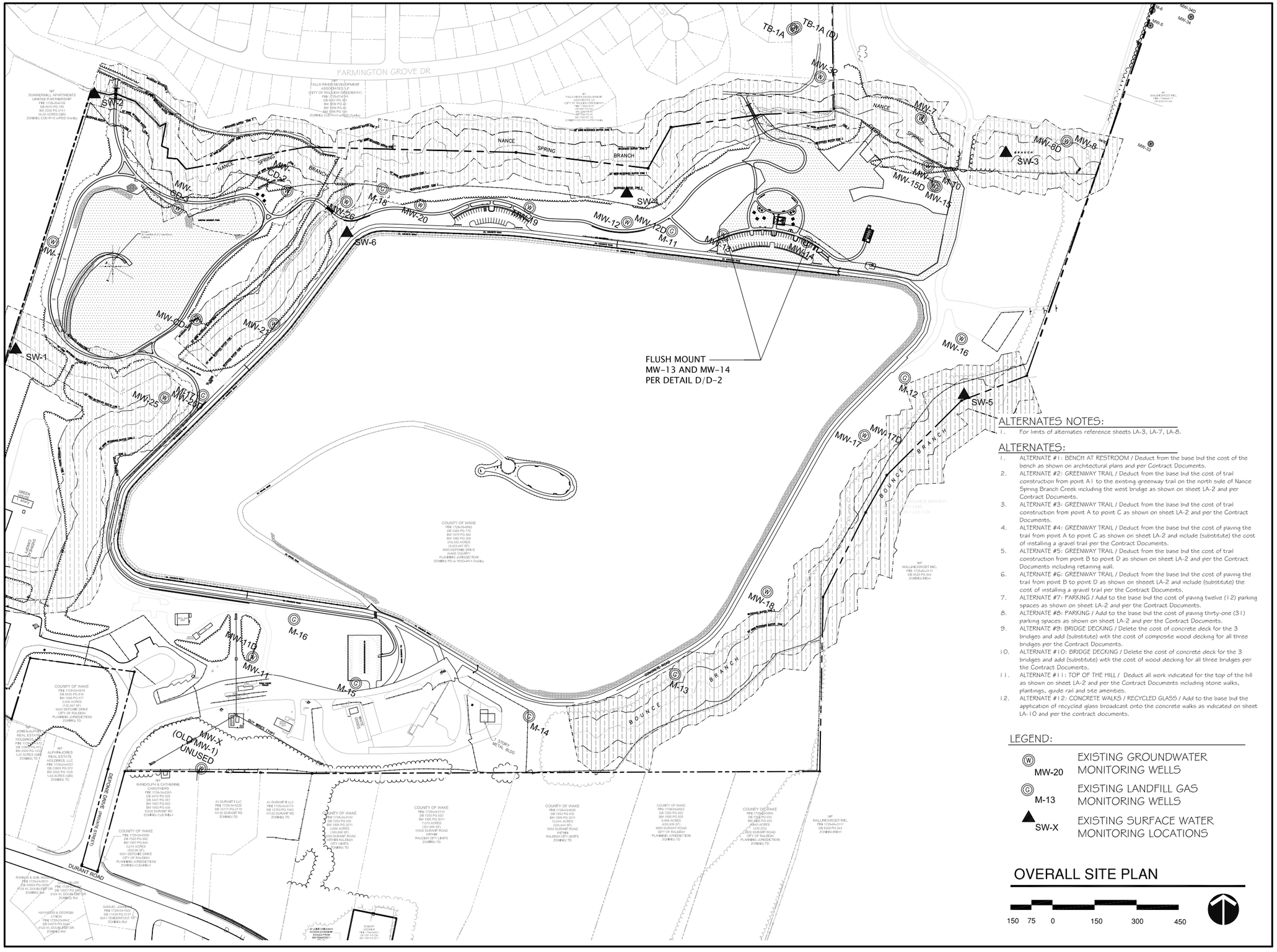

ALTERNATES NOTES:

1. For limits of alternates reference sheets LA-3, LA-7, LA-8.

ALTERNATES:

1. ALTERNATE #1: BENCH AT RESTROOM / Deduct from the base bid the cost of the bench as shown on architectural plans and per Contract Documents.
2. ALTERNATE #2: GREENWAY TRAIL / Deduct from the base bid the cost of trail construction from point A1 to the existing greenway trail on the north side of Nance Spring Branch Creek including the west bridge as shown on sheet LA-2 and per Contract Documents.
3. ALTERNATE #3: GREENWAY TRAIL / Deduct from the base bid the cost of trail construction from point A to point C as shown on sheet LA-2 and per the Contract Documents.
4. ALTERNATE #4: GREENWAY TRAIL / Deduct from the base bid the cost of paving the trail from point A to point C as shown on sheet LA-2 and include (substitute) the cost of installing a gravel trail per the Contract Documents.
5. ALTERNATE #5: GREENWAY TRAIL / Deduct from the base bid the cost of trail construction from point B to point D as shown on sheet LA-2 and per the Contract Documents including retaining wall.
6. ALTERNATE #6: GREENWAY TRAIL / Deduct from the base bid the cost of paving the trail from point B to point D as shown on sheeet LA-2 and include (substitute) the cost of installing a gravel trail per the Contract Documents.
7. ALTERNATE #7: PARKING / Add to the base bid the cost of paving twelve (12) parking spaces as shown on sheet LA-2 and per the Contract Documents.
8. ALTERNATE #8: PARKING / Add to the base bid the cost of paving thirty-one (31) parking spaces as shown on sheet LA-2 and per the Contract Documents.
9. ALTERNATE #9: BRIDGE DECKING / Delete the cost of concrete deck for the 3 bridges and add (substitute) with the cost of composite wood decking for all three bridges per the Contract Documents.
10. ALTERNATE #10: BRIDGE DECKING / Delete the cost of concrete deck for the 3 bridges and add (substitute) with the cost of wood decking for all three bridges per the Contract Documents.
11. ALTERNATE #11: TOP OF THE HILL / Deduct all work indicated for the top of the hill as shown on sheet LA-2 and per the Contract Documents including stone walks, plantings, guide rail and site amenities.
12. ALTERNATE #12: CONCRETE WALKS / RECYCLED GLASS / Add to the base bid the application of recycled glass broadcast onto the concrete walks as indicated on sheet LA-10 and per the contract documents.

LEGEND:

MW-20	EXISTING GROUNDWATER MONITORING WELLS
M-13	EXISTING LANDFILL GAS MONITORING WELLS
SW-X	EXISTING SURFACE WATER MONITORING LOCATIONS

OVERALL SITE PLAN

150 75 0 150 300 450

obs
landscape architects
land planners

306/200 Parham Street
Suite B
Raleigh, NC 27601
919.755.0046

NORTH WAKE LANDFILL PARK PHASE ONE

9000 DEPONIE DRIVE
RALEIGH,NC

WAKE COUNTY
FACILITIES DESIGN
AND CONSTRUCTION

Consultants

Professional Seals

Revisions

No.	Description	Date

Date Issued:	03/03/09
Scale	1"=150'
Drawn by:	NMY/LT
Checked by:	BHS
Sheet No.	

LA-2

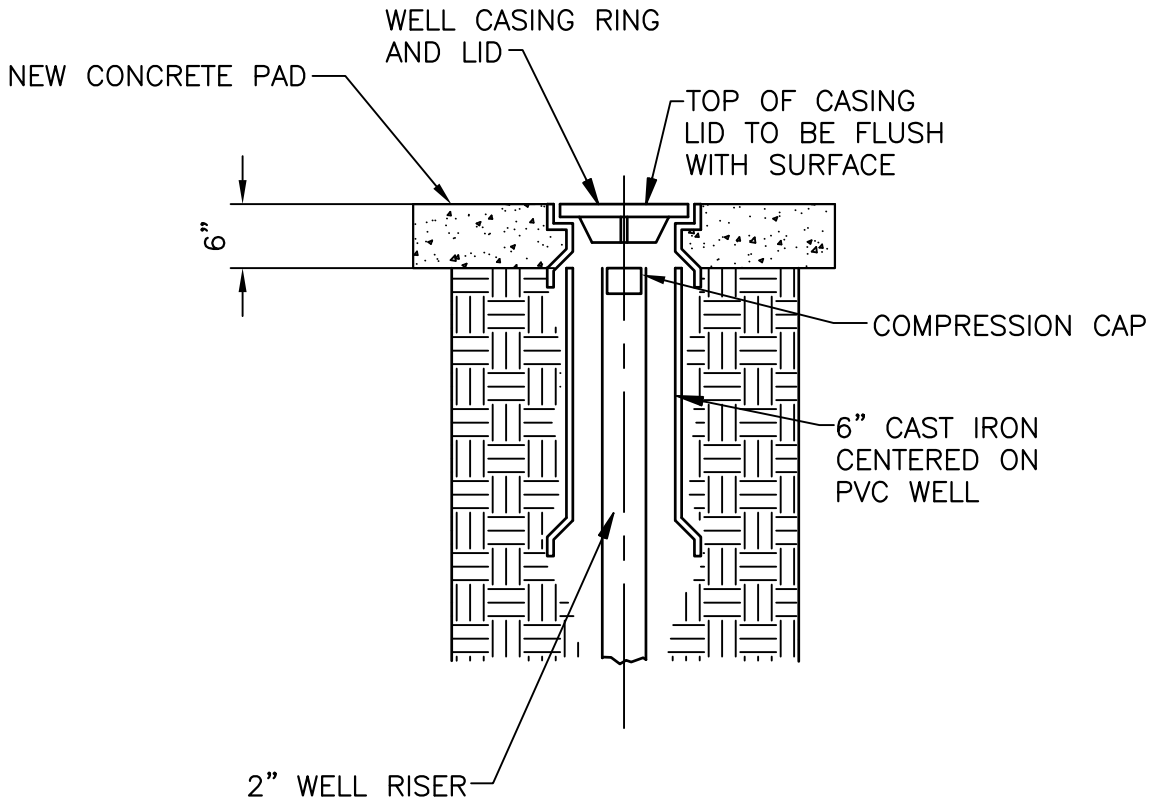

FLUSH MOUNTED MONITORING WELL

DETAIL D

NTS –

NOTE:

1. REMOVE STEEL CASING AND ASSOCIATED CONCRETE PAD
2. INSTALL NEW FLUSH MOUNTED CASING AND PAD
3. REMOVE EXISTING COMPRESSION CAP
4. CUT 2" WELL RISER TO 6" BELOW GRADE
5. REINSTALL COMPRESSION CAP
6. INSTALL WATERTIGHT BOLTED LID

	DATE 04–22–09			FIGURE NO.
CDM Camp Dresser & McKee		SHEET NO.		
		D–2		FIG 1

Attachment No. 2

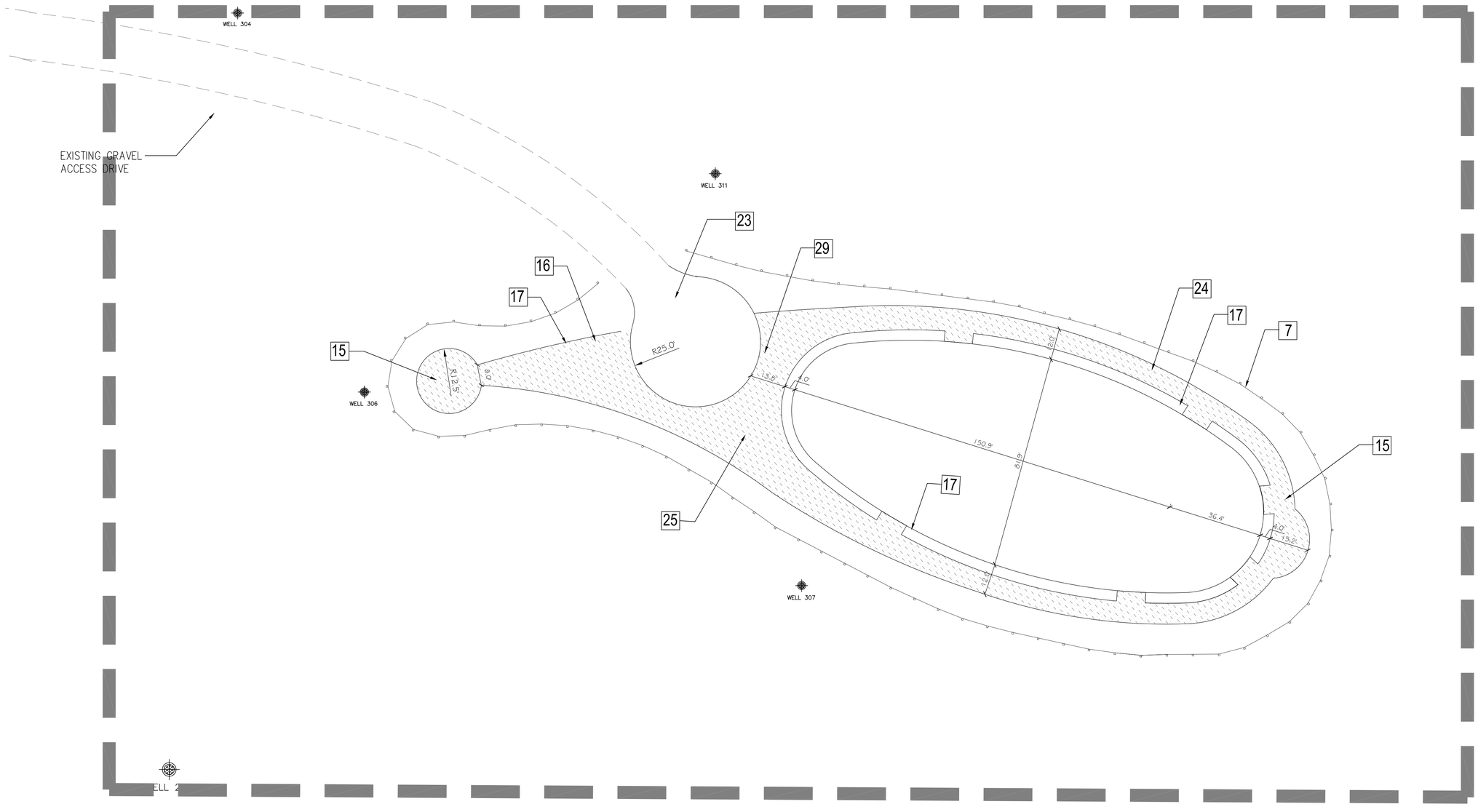

SITE IMPROVEMENT NOTES:

1. 8' WIDE ASPHALT TRAIL PER DETAIL 7/LA-22 & 1/LA-22.
2. CONCRETE WALK / PAVING PER DETAIL 2/LA-22.
3. ASPHALT PAVING PER DETAIL 1/LA-22.
4. WHEEL STOP - SEE SITE AMENITIES SCHEDULE SHEET LA-1. INSTALL PER MANUFACTURERS SPECIFICATION AND PER DETAIL 4/LA-21.
5. HANDICAP PARKING SIGN PER DETAIL 1/LA-21.
6. HANDICAP PARKING SPACES PER DETAIL 2/LA-21.
7. GUIDE RAIL PER DETAIL 7/LA-21.
8. SEE ALTERNATES ON SHEET LA-2.
9. BRIDGE ABUTMENTS & FOUNDATIONS - REFERENCE ENGINEER DRAWINGS, SHEETS S-1, S-2, S-3, LA-25.
10. PRE-FABRICATED STEEL BRIDGE (TOTAL QTY: 3) BY CONTECH BRIDGE SOLUTIONS, OR APPROVED EQUAL. PEDESTRIAN BRIDGE, PONY TRUSS, CONCRETE DECKING, VERTICAL PICKETS IN WEATHERING STEEL. DIMENSIONS AS FOLLOWS:
    10a. 8' wide X 40' long
    10b. 8' wide X 26' long
    10c. 8' wide X 50' long
11. RELOCATED FENCE. REPLACE WITH NEW AS NEEDED PER DETAIL 4/LA-23.
12. 10' WIDE DOUBLE SWING GATE PER DETAIL 3/LA-23.
13. PICNIC TABLES - SEE SITE AMENITIES SCHEDULE SHEET LA-1. INSTALL PER MANUFACTURERS SPECIFICATIONS ON CONCRETE PAD PER DETAIL 2/LA-22.
14. ACCESSIBLE PICNIC TABLE - SEE SITE AMENITIES SCHEDULE SHEET LA-1. INSTALL PER MANUFACTURERS SPECIFICATIONS.
15. BENCHES - SEE SITE AMENITIES SCHEDULE SHEET LA-1. INSTALL PER MANUFACTURERS SPECIFICATIONS. LANDSCAPE ARCHITECT TO FIELD LOCATE.
16. BIKE RACK - SEE SITE AMENITIES SCHEDULE SHEET LA-1. INSTALL PER MANUFACTURERS SPECIFICATIONS.
17. TRASH RECEPTACLE - SEE SITE AMENITIES SCHEDULE SHEET LA-1. INSTALL PER MANUFACTURERS INSTRUCTIONS. ANY TRASH RECEPTACLE SHOWN ON PAVEMENT SHALL BE SURFACE MOUNTED.
18. SHELTER - SEE SITE AMENITIES SCHEDULE SHEET LA-1. INSTALL PER MANUFACTURERS SPECIFICATIONS ON CONCRETE PAD PER DETAILS 2/LA-22 AND 8/LA-22.
19. RESTROOM BUILDING & BENCH - REFERENCE ARCHITECTURAL DRAWINGS.
20. MONITORING WELL TO BE FLUSH MOUNTED PER DETAIL D/D-2.
21. GRAVEL PARKING LOT BY OTHERS.
22. PARK ACCESS GATE PER DETAIL 1/LA-24, 2/LA-24, AND 3/LA-24.
23. GRAVEL TURNAROUND BY OTHERS.
24. AGGREGATE PATH PER DETAIL 5/LA-22.
25. EDUCATIONAL SIGNAGE BY OTHERS. LOCATION TO BE DETERMINED IN FIELD.
26. RETAINING WALL PER DETAIL 2/LA-23. REFERENCE SHEETS LA-12, LA-13, LA-16 FOR WALL ELEVATIONS.
27. GRILL - SEE SITE AMENITIES SCHEDULE SHEET LA-1. INSTALL PER MANUFACTURERS SPECIFICATIONS ON CRUSHED STONE PAD PER DETAIL 8/LA-21.
28. COLLAPSIBLE BOLLARD - SEE SITE AMENITIES SCHEDULE SHEET LA-1. INSTALL PER MANUFACTURERS SPECIFICATIONS.
29. BOULDERS - CONTRACTOR TO SUPPLY BOULDERS WITH MIN. 3' DIAMETER.
30. CONCRETE CURB AND GUTTER PER DETAIL 3/LA-22.
31. RECYCLING RECEPTACLE - SEE SITE AMENITIES SCHEDULE SHEET LA-1. INSTALL PER MANUFACTURERS SPECIFICATIONS ON CONCRETE PAD PER DETAIL 2/LA-22.
32. DRINKING FOUNTAIN - SEE SITE AMENITIES SCHEDULE SHEET LA-1. INSTALL PER MANUFACTURERS SPECIFICATIONS.
33. SPEED BUMP - SEE SITE AMENITIES SCHEDULE SHEET LA-1. INSTALL PER MANUFACTURERS SPECIFICATIONS. TOTAL LOCATIONS (3).
34. WIPE DOWN CURB PER DETAIL 5/LA-21.
35. CROSSWALK PER DETAIL 3/LA-21.
36. CONCRETE BRIDGE APPROACH PER DETAIL 2/LA-22
37. TURFSTONE PAVING PER DETAIL 4/LA-24 AND 5/LA-24. FILL VOIDS WITH CRUSHED STONE.
38. METAL GATE AND TRAIL BOLLARD PER DETAIL 1/LA-23.
39. ASPHALT / CONCRETE CONNECTION PER DETAIL 4/LA-22.
40. PAINTED CENTERLINE - 4" WIDE, YELLOW THERMOPLASTIC FROM GATE TO GATE.
41. PAINTED STOP BAR - 18" WIDE, WHITE THERMOPLASTIC.

LAYOUT PLAN

20 10 0 20 30 40

obs
landscape architects
land planners

306/200 Parham Street
Suite B
Raleigh, NC 27601
919.755.0046

NORTH WAKE LANDFILL PARK PHASE ONE

9000 DEPONIE DRIVE
RALEIGH,NC

WAKE COUNTY
FACILITIES DESIGN
AND CONSTRUCTION

Consultants

Professional Seals

NORTH CAROLINA REGISTERED LANDSCAPE ARCHITECT C-110 OBS LANDSCAPE ARCHITECTS

NORTH CAROLINA REGISTERED LANDSCAPE ARCHITECT 549 BRIAN H. STARKEY

Revisions

No.	Description	Date

Date Issued:	03/03/09
Scale	1"=20'
Drawn by:	NMY/LT
Checked by:	BHS
Sheet No.	

LA-9

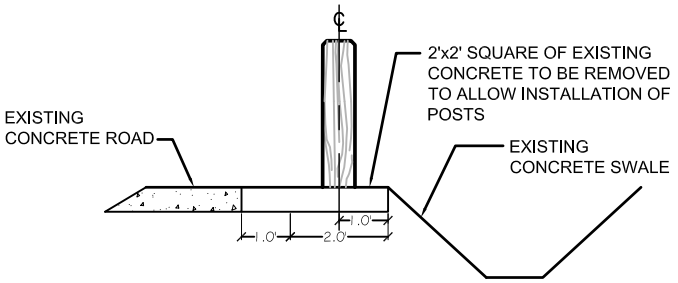

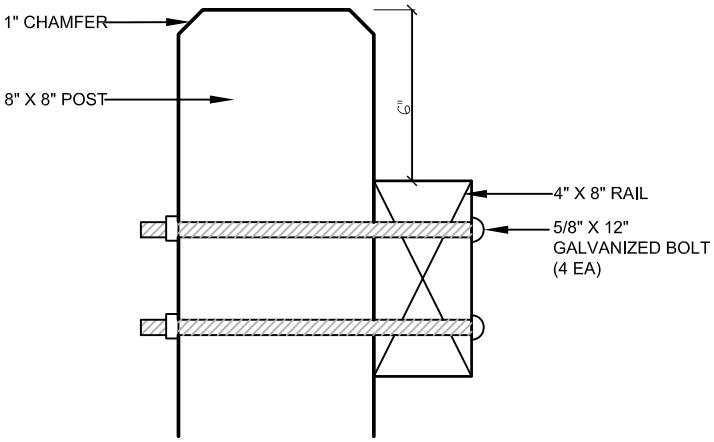

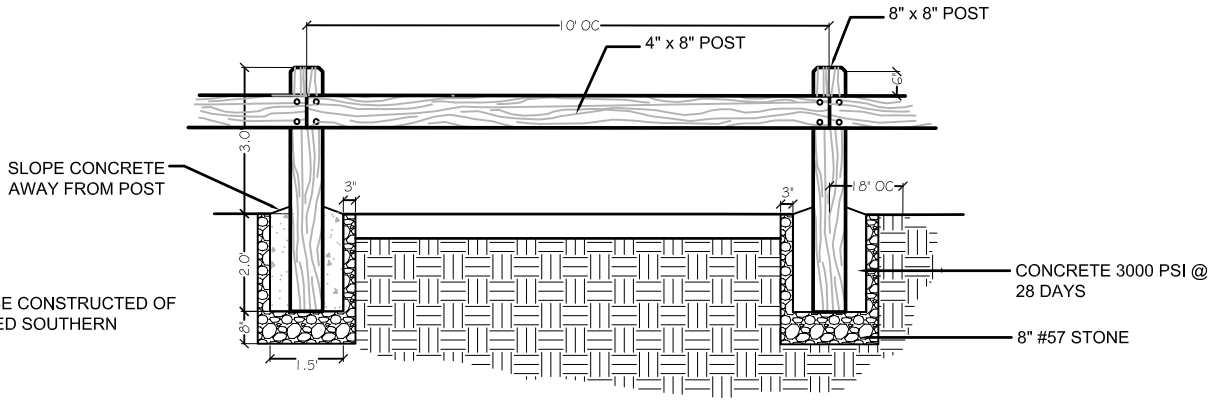

NOTES:

1. GUIDE RAIL IS TO BE CONSTRUCTED OF PRESSURE TREATED SOUTHERN YELLOW PINE.

landscape architects
land planners

306/200 Parham Street
Suite B
Raleigh, NC 27601
919.755.0046

PROJECT: North Wake Landfill Park, Wake County

Guiderail Detail

Scale: NTS 04.23.09

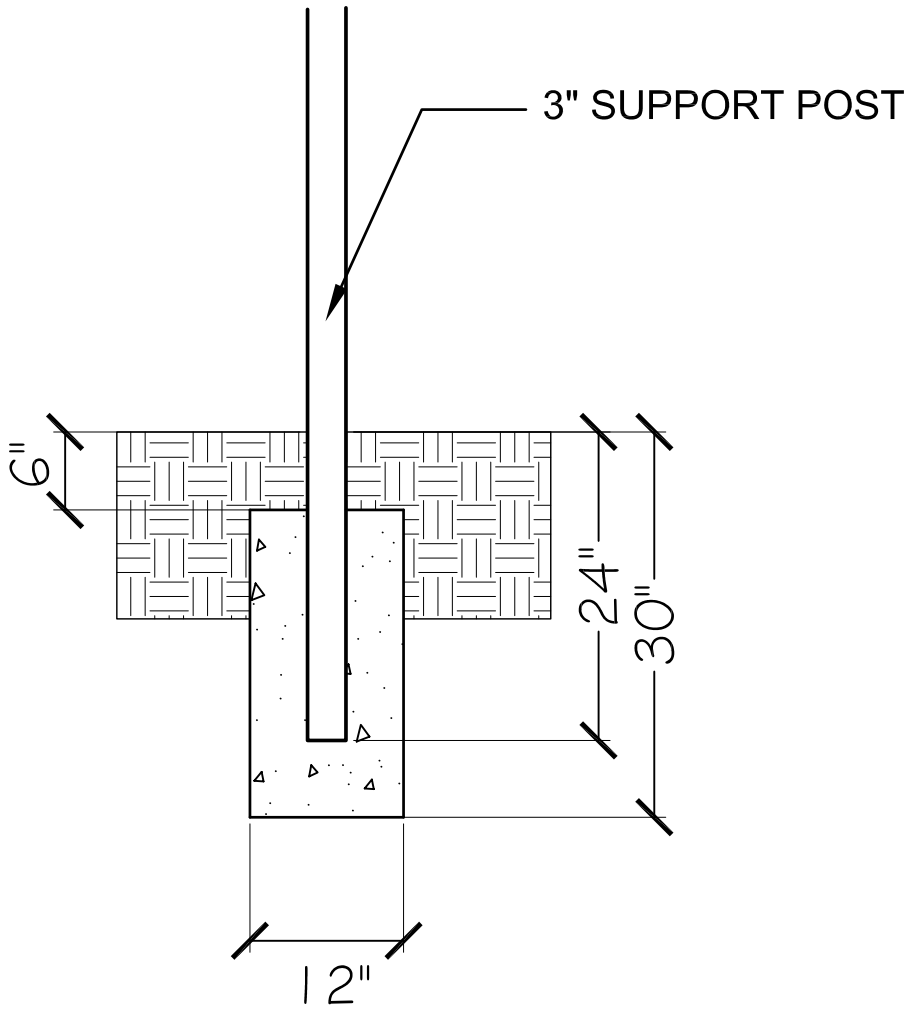

PROJECT: North Wake Landfill Park, Wake County

Bench - Support Post Embedment Detail

landscape architects
land planners

306/200 Parham Street
Suite B
Raleigh, NC 27601
919.755.0046

Scale: NTS 04.23.09

Attachment No. 3

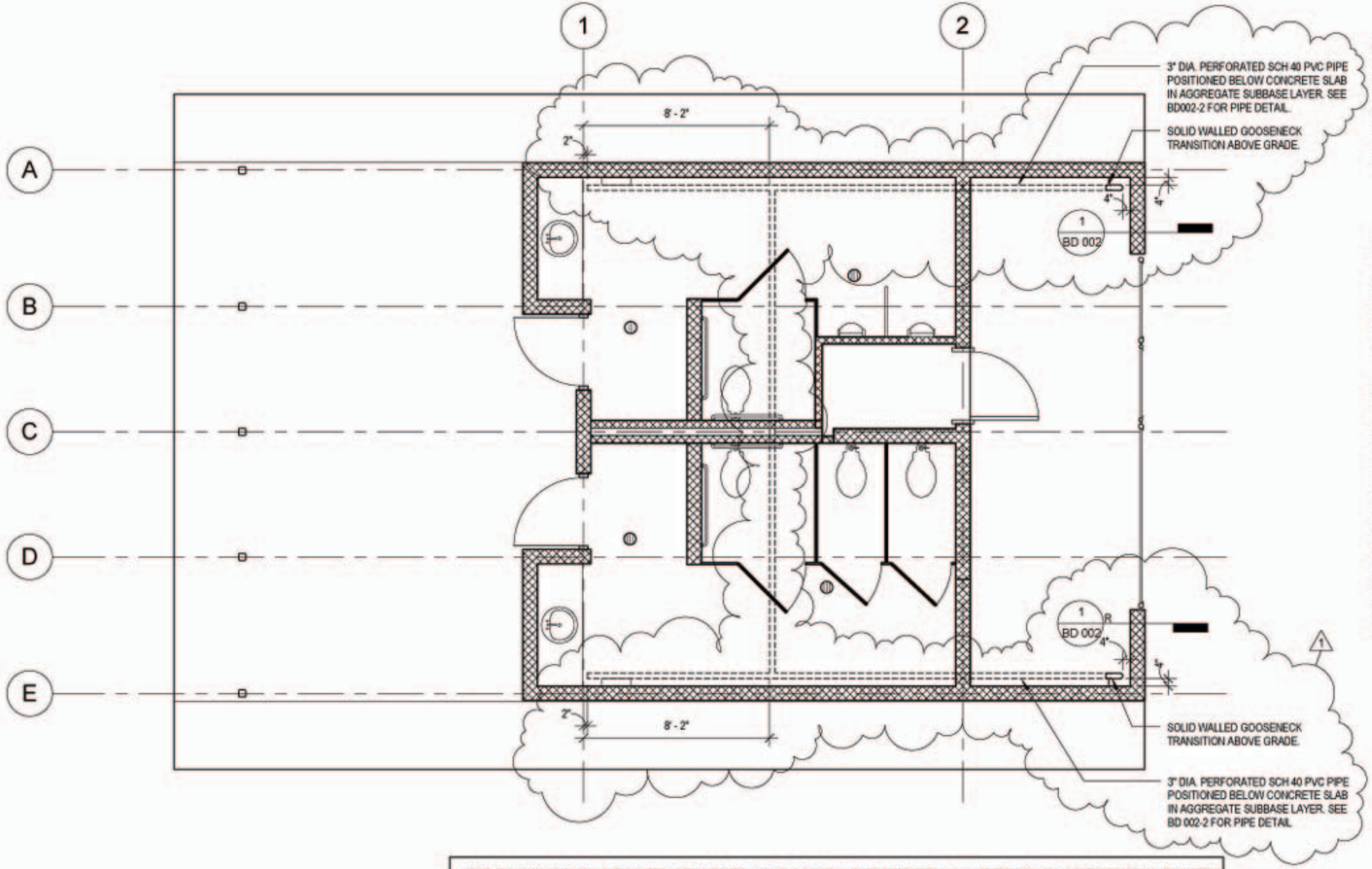

NOTE: DRAWINGS SHOWING THE SLOTTED METHANE PIPE LAYOUT, AND METHANE VENT PIPE DETAILS HAVE BEEN DRAWN AS DIRECTED BY SCS ENGINEERS OF POWHATAN, VIRGINIA. CHERRY HUFFMAN ARCHITECTS PA ASSUMES NO RESPONSIBILITY FOR THESE DETAILS COMPOSING THE METHANE VENTING SYSTEM FOR THIS PROJECT.

FIRST FLOOR-METHANE PIPE LAYOUT

1 / BD 001 1/4" = 1'-0"

NORTH WAKE COUNTY LANDFILL PARK- TOILET BUILDING

ADDENDUM #1 - METHANE PIPE LAYOUT

REF. DRAWING: A401

3/24/2009 1:57:28 PM

BD 001

CHERRY HUFFMAN ARCHITECTS PA
135 E. Martin Street, Suite 101
Raleigh, North Carolina 27601
919.821.0601 919.821.0720 F
www.cherryhuffman.com

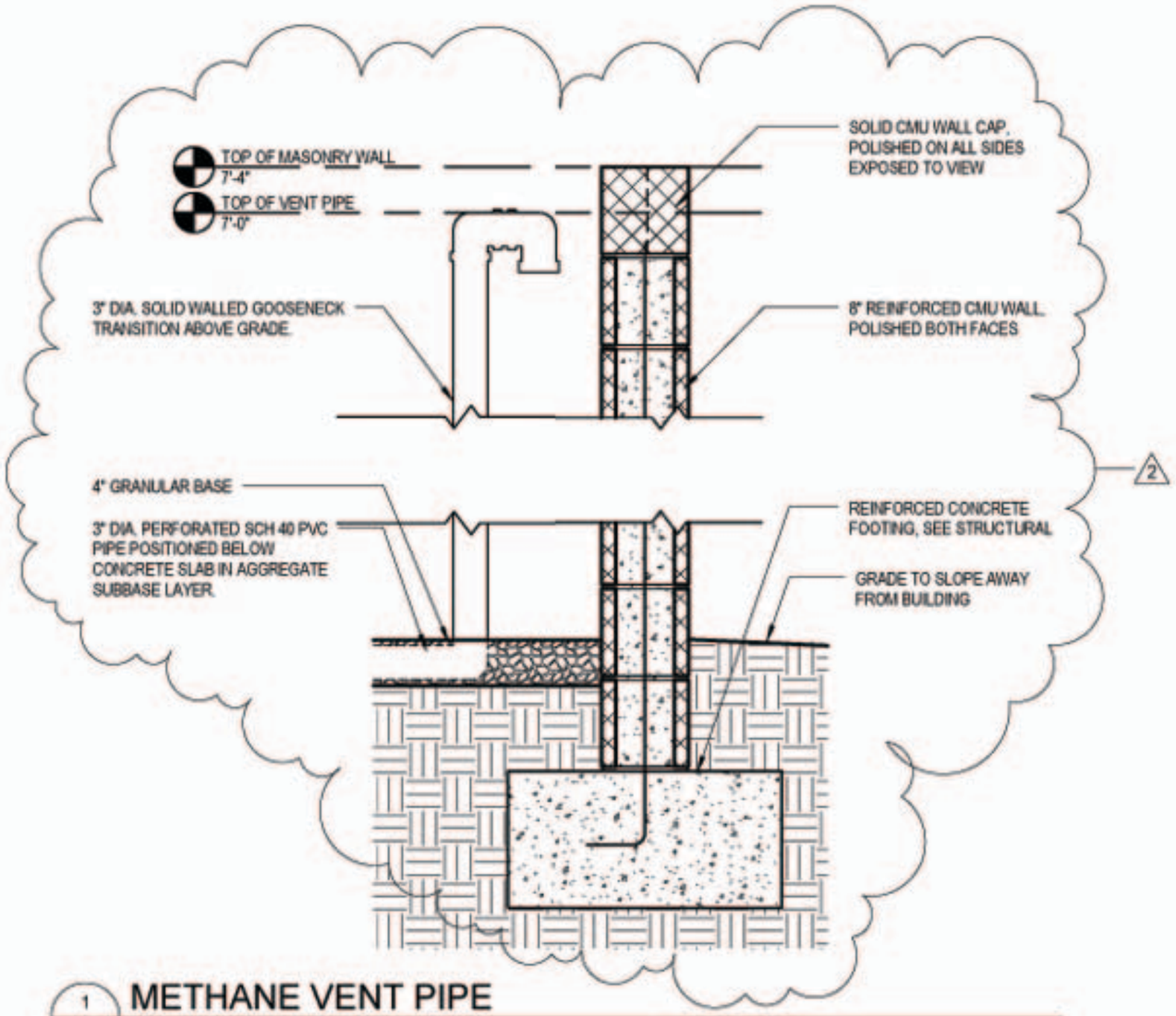

1 BD 002 METHANE VENT PIPE
1" = 1'-0"

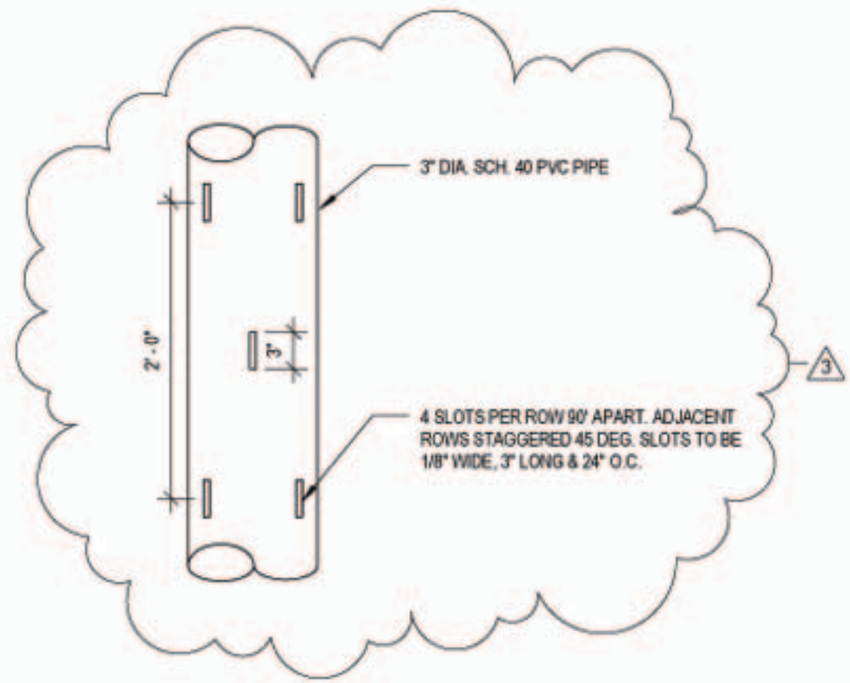

2 BD 002 SLOTTED PIPE
1" = 1'-0"

NOTE: DRAWINGS SHOWING THE SLOTTED METHANE PIPE LAYOUT, AND METHANE VENT PIPE DETAILS HAVE BEEN DRAWN AS DIRECTED BY SCS ENGINEERS OF POWHATAN, VIRGINIA. CHERRY HUFFMAN ARCHITECTS PA ASSUMES NO RESPONSIBILITY FOR THESE DETAILS COMPOSING THE METHANE VENTING SYSTEM FOR THIS PROJECT.

3/24/2009 1:57:42 PM

NORTH WAKE COUNTY LANDFILL PARK- TOILET BUILDING

ADDENDUM #1 - METHANE VENT DETAILS
REF. DRAWING: A401

BD 002

CHERRY HUFFMAN ARCHITECTS PA
135 E. Martin Street, Suite 101
Raleigh, North Carolina 27601
919.821.0061 919.821.0720
www.cherryhuffman.com

Attachment No. 4

Section 2
Post-Closure Plan

Rule .1617(a)(1)(E), of the North Carolina Solid Waste Regulations Section 15A NCAC 13B .1600, requires owners/operators of municipal solid waste landfill (MSWLF) units to prepare a post-closure plan. The purpose of the plan is to provide the necessary information for preserving the integrity of the landfill facility in its post-closure life. This post-closure plan specifically addresses any planned uses for the landfill after closure and maintenance activities for the closure cap, landfill gas control system, leachate collection system, ground water monitoring wells, and erosion and sedimentation control. This plan also addresses certification and financial assurance requirements.

Post-closure care will begin immediately following final closure of the landfill. Post-closure care may decrease from the minimum time period of 30 years specified in the regulations if the County can demonstrate that the reduced period will pose no threat to human health or the environment. However, the North Carolina Department of Environment and Natural Resources, Solid Waste Section reserves the right to increase the post-closure care period if it is deemed necessary to protect human health and the environment.

2.1 Planned Use of Landfill After Closure

The North Wake Landfill (NWLF), located off Durant Road on Deponie Drive in North Raleigh, has been in operation since 1988 and has recently closed and no longer accepts municipal solid waste. Closure operations are underway and scheduled to be completed by early 2009. In 2005, in preparation for the closure, the County hired the consultant team of OBS Landscape Architects and CDM to facilitate a public planning process and produce a Master Plan for post closure use. The project planning team included representatives from Wake County, City of Raleigh, Wake County Public School System, North Carolina Department of Environment and Natural Resources (NCDENR), a neighborhood citizens committee and surrounding community. The final Master Plan was accepted by County Commissioners in February 2006. The final Master Plan includes trails, picnic shelters, restrooms, playgrounds, elementary school, athletic fields, and EMS facility (See Figure 1).

The athletic fields, playgrounds, elementary school, and EMS facility are currently planned in what is now identified as the borrow area. Although part of the overall development of the Wake County property, proposed future facilities within the borrow area are outside the permitted landfill boundary and will not be monitored or maintained as part of post-closure care plan.

This first phase of the Master Plan includes development generally along the northern perimeter of the Subtitle D landfill, indicated by areas B, C, E, F, and G (See Figure 2).

North Wake Landfill Post Closure Land Use Master Plan

Legend

A. Elementary School, Athletic and Community Recreation Complex
- Elementary School
- Football Fields
- Baseball Fields
- Softball Fields
- Multi-purpose Fields
- School Multi-purpose Field
- Community Building
- Restrooms and Concessions Buildings
- Playground
- Skate Park
- Picnic Shelters
- Parking
- Public Art
- EMS Facility

B. Braided Pathways
- Paved Pedestrian / Bike Trail
- Central Pond
- Hike and Bike Trails (unpaved)
- Public Art
- Trail Head Parking

C. The Meadow
- Hike and Bike Trails (unpaved)
- Native Plants Garden
- Open Space Multi-Use
- Playground
- Paved Pedestrian / Bike Trails
- Picnic Shelters
- Restrooms
- Outdoor Classroom
- Parking
- Secured Area / Gas Flare, Leachate Tank and Maintenance Building

D. Prospect Hill
- Hike and Bike Trails (unpaved)
- Paved Pedestrian / Bike Trails
- Top of Hill: Viewing Shelter, Open Space, Public Art, Loop Trail
- Wetland
- Greenway Connection
- Shelter

E. Braided Pathways
- Paved Pedestrian / Bike Trail
- Hike and Bike Trails (unpaved)
- Public Art
- Trail Head Parking

F. Kids and Canines Recreation Area
- Dog Park
- Hike and Bike Trails (unpaved)
- Greenway Connection
- Restroom
- Top of Hill: Viewing Shelter, Public Art, Playground
- Paved Pedestrian / Bike Trail
- Parking

G. Top of the Hill Education Center
- Reduce Pavilion
- Reuse Pavilion
- Recycle Pavilion
- Public Art
- Pedestrian Trail
- Simulated Landfill Exhibit
- Programmed Vehicle Parking

H. GSA Service Center
- Proposed Office Expansion
- Storage / Maintenance Expansion
- Fueling Station

I. Solid Waste Services
- Convenience Center (Super Center)
- Household Hazardous Waste
- Multi-Material
- Maintenance
- Communications Tower
- Employee Office
- Office and Employee Training Center
- Temporary EMS Facility

J. Future Development Area
- J1 Potential Office Expansion & fueling station
- J2 Potential EMS Facility
- J3 Potential Office Expansion & EMS Facility

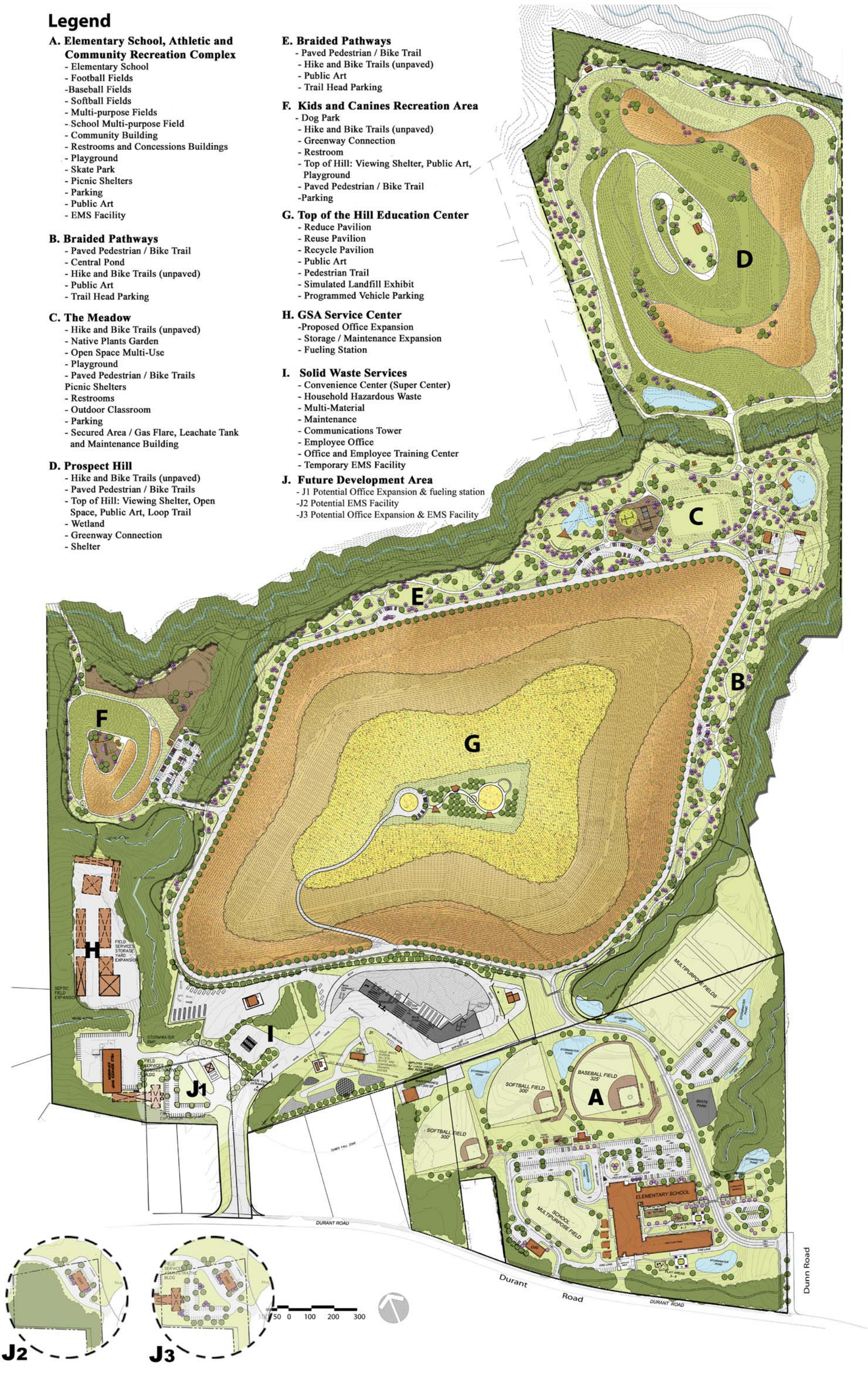

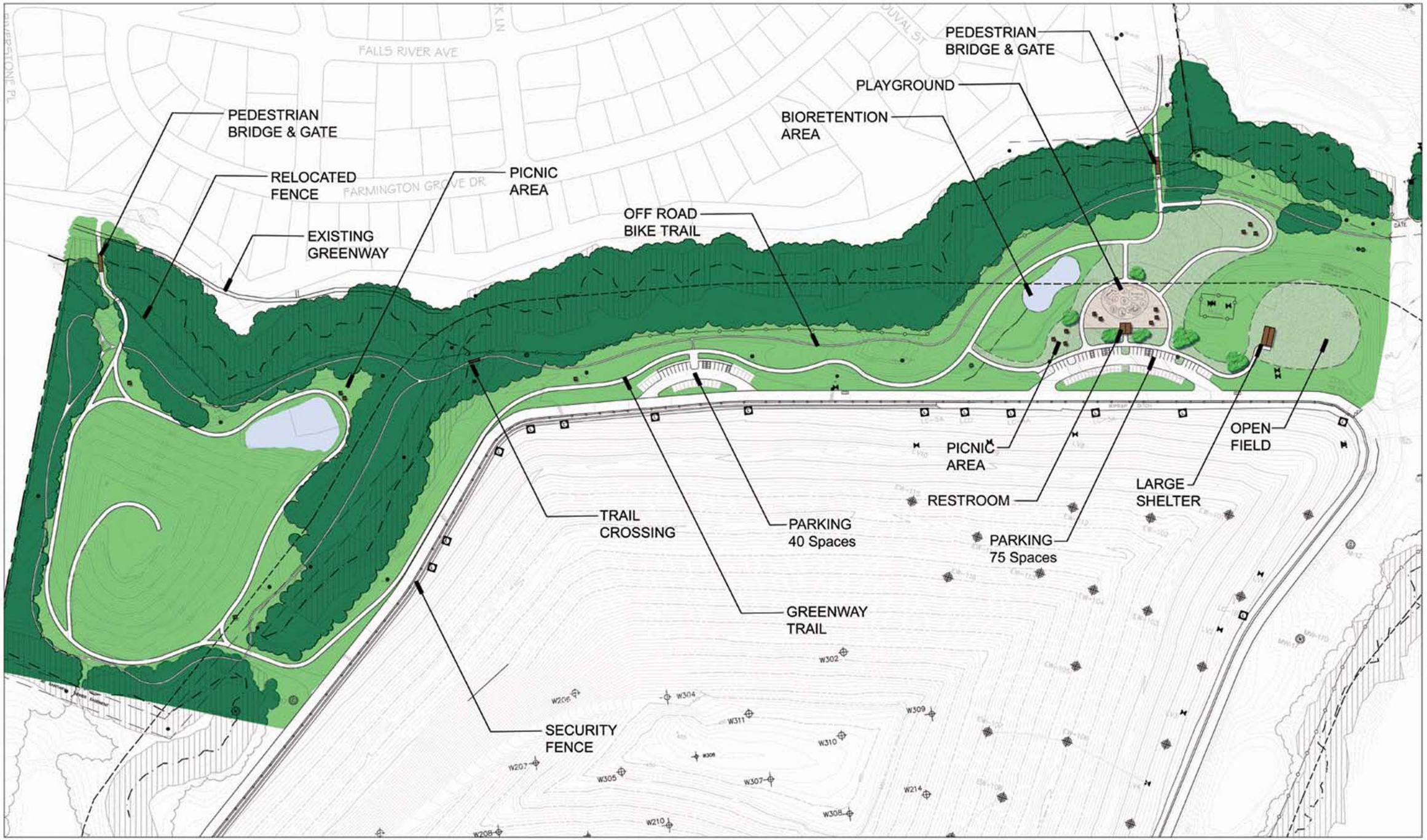

NORTH WAKE LANDFILL PARK

PHASE 1

100 50 0 100 200 300

Figure 2

All subsequent phases will be submitted to the North Carolina Department of Environment and Natural Resources, Division of Waste Management, Solid Waste Section (SWS) for approval as a permit modification prior to development of additional phases. This design is consistent with the concepts of the Master Plan. As the details of the design were developed, the NWLF citizens committee continued to be active participants in this design process. Wake County representatives, City of Raleigh and NCDENR also contributed to development of the Master Plan.

The first phase of the park includes trails, playground, restroom facility, open space play area and large picnic shelter (75-100 person). A paved pedestrian path is woven throughout the different park areas and connects to the adjacent neighborhoods and the City of Raleigh greenway system at two locations via pedestrian bridges. There are also approximately 2.5 miles of off-road bicycling and hiking trails planned. These off road trails will be constructed through grant funding. Initially Vehicular access to the park facility will be through the existing landfill entrance from Durant Road and Deponie Drive along the existing internal perimeter road that traverses around the main landfill. Parking areas are provided at the main day use area and along the perimeter road to provide access to the trail system. Additional amenities throughout the park will include picnic areas and interpretive signage. Once the school and the park are built on the borrow site, access to the park will be redirected to a common route off of a newly established section of Dunn Road. Distribution of vehicles within the landfill park will continue to be via the internal perimeter road.

Access to the park will be limited to the two greenway entrances and the landfill park entrance. These entrances will be open from 8 a.m. to sunset. Site security will be maintained by the existing perimeter fence and gates will be installed at all entrances to secure each entrance during hours outside of operations.

An additional amenity to the park includes access to the top of the Subtitle D landfill that is currently being closed (See Figure 3). Pedestrians and bicyclists will be allowed access to the top of the landfill along a walkway that serves as the maintenance access road. Vehicular access will be controlled and limited. This access drive will lead to a loop trail at the top of the hill that has benches, interpretive signage, and special plantings. The loop trail will allow 360-degree long distance views from the top of the landfill to the surrounding area. Key observation / orientation points will be provided at (2) locations along this loop trail. The fence surrounding the accessible area on top of the hill will be installed to discourage access on the side slopes outside the loop trail.

To provide protection to the underlying closure cap system a minimum of 4 feet of cover will be placed over the landfill liner in areas that the public will be allowed to access. Additional material will be added to increase the thickness of the vegetative cover layer such that the structures incorporated into the loop trail amenity above, can be properly installed without penetrating the 18-inch-thick protective cover layer. The additional vegetative cover will not exceed the permitted landfill height since the landfill closed in advance of achieving permitted waste grades.

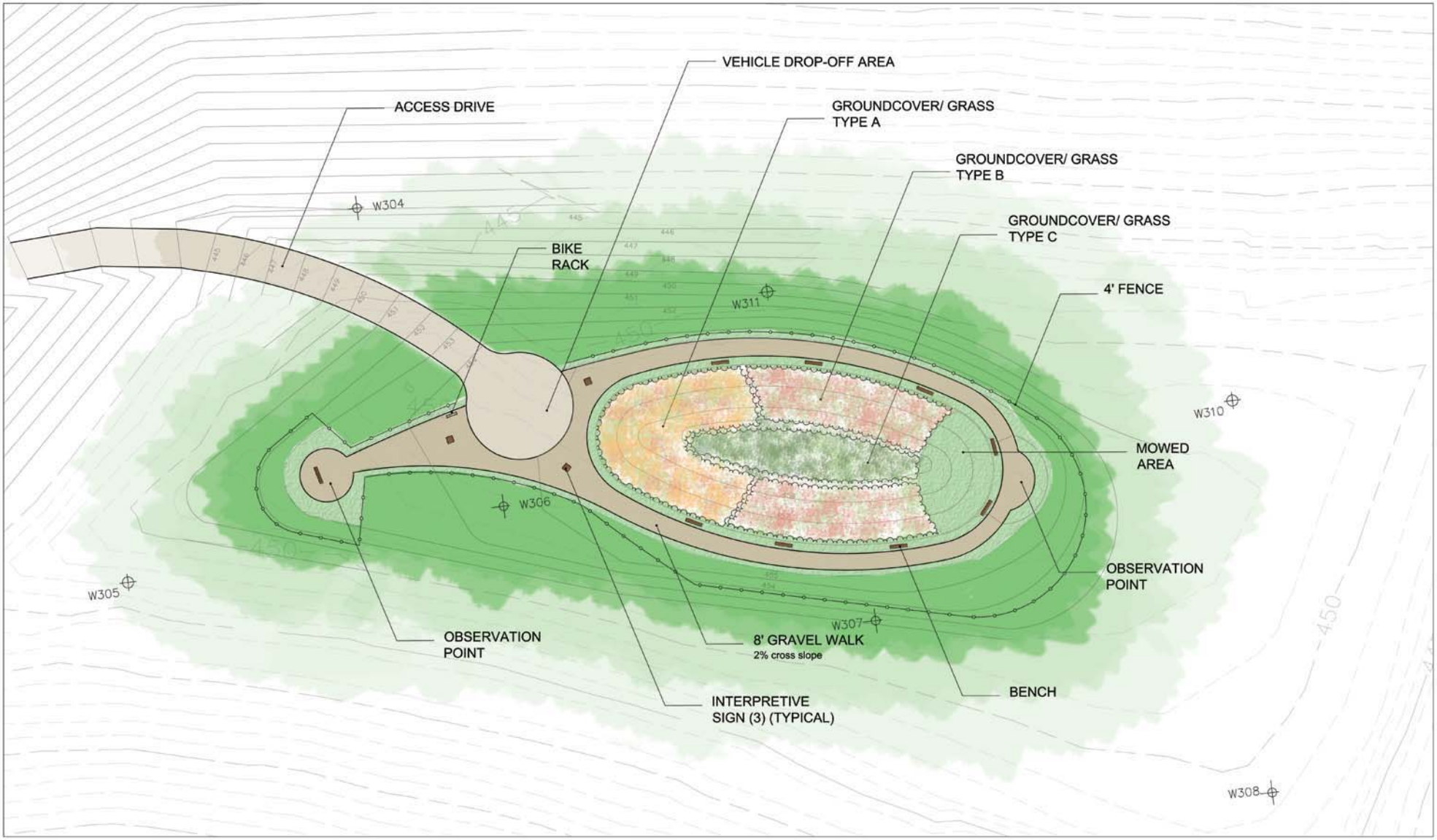

Top of the Hill

20 10 0 20 40 60

Figure 3

NORTH WAKE LANDFILL PARK

2.2 Maintenance and Monitoring Activities

Post-closure maintenance and monitoring activities for the North Wake Subtitle D Landfill will include the following activities:

2.2.1 Final Cover (Cap) System

Inspection of the closure cap will take place quarterly. The inspection will consist of a field survey of the entire closure cap. Items of concern to be noted by the inspector will include but are not limited to: signs of erosion (ruts, sediment deposits, etc.), patches of stressed or dead vegetation, animal burrows, recessed areas or ponding, upheaving, leachate seepage stains and/or flowing leachate, cracks in the cap, damaged gas vents and tree saplings (especially species with tap roots).

Following each inspection, a summary report of the condition of the cap and the items of concern shall be recorded in the post-closure logbook for the facility. Areas that require further attention shall be photographed and delineated on a map of the facility. These items will also be entered in the logbook. Since post-closure inspection personnel will most likely change during the post-closure period, the post-closure logbook shall be kept in a standardized format that allows for new inspection personnel to easily review the results of past post-closure inspections of the site and to make new entries during quarterly inspections.

Action shall be taken immediately to address any items of concern identified during each quarterly inspection. Obvious repair items shall be performed under the supervision of the post-closure maintenance manager. If an item of concern requires further study to determine a course of action, the engineer responsible for closure design shall be contacted for consultation.

Maintenance required for the closure cap is minimal. The vegetative cover will be mowed at least twice a year to suppress weed and brush growth. If vegetative cover is not adequate in any particular area, fertilizer will be applied and the area re-seeded in order to re-establish growth. Animal burrows and eroded or depressed areas shall be filled in with compacted soil and reseeded.

2.2.2 Leachate Collection System

The post-closure leachate collection system will consist of leachate collection lines, leachate header lines, leachate cleanouts, the leachate gravity main and the leachate sampling station. The leachate storage pond, which is part of the operational leachate collection system, is scheduled for decommissioning during the Phase 2 Closure project, currently under construction. The leachate storage pond decommissioning plan and approach is provided in Appendix A.

Inspection of the accessible items of the leachate collection system (i.e. clean-outs, manholes and pump station) will be made on a quarterly basis. Inspection of the collection lines will be performed concurrent with the annual cleaning service.

The sump pump flow meter vault shall be inspected each quarter by a qualified inspector who is knowledgeable in the operation of sump pump flow meters. The inspector shall manually operate each pump to ensure that they are working properly. The flow meter calibration shall be checked quarterly and scheduled for recalibration, as needed. Flow meter records shall be monitored and placed in the post-closure logbook. A summary report as to the condition of the sump pump and metering facilities shall be recorded in the post-closure logbook along with photographs of any items of concern.

The clean-outs shall also be inspected for damage on a quarterly basis. The protruding portion of each clean-out shall be checked for damage. If problems with the leachate collection system are discovered, assessment and then repairs (if needed) shall begin immediately.

All piping of the leachate collection system will be pressure cleaned and flushed annually to remove the build-up of biological growth and sediments.

The sump pump shall be pulled and inspected every six months to check electrical connections, excessive impeller wear and obstructions.

2.2.3 Groundwater Monitoring Wells

Inspection of the ground water monitoring wells will take place semi-annually during scheduled sampling events. The inspection will consist of verifying the condition of the monitoring wells to ensure that no damage has occurred and that representative ground water samples can be collected. The inspector should note the following:

1) The total depth of the well shall be recorded every time a water sample is collected or a water level reading is taken to check if sediment has accumulated at the bottom of the well or if the well has been damaged. If sediment build-up has occurred, the sediment shall be removed by pumping or bailing.

2) If turbid samples are collected from a well, redevelopment of the well will be performed.

3) The above-ground protective casing shall be inspected for damage. The protective casing, including the concrete base, shall be structurally sound and free of any damage or corrosion. The lockable cover and lock shall also be checked at this time. Locks will be replaced as needed to maintain security.

4) The surface seals shall be inspected for settling and cracking. If the seal is damaged in any way, the seal will be replaced.

5) Well casings shall also be inspected. Well casings shall be structurally sound and free of any cracks.

6) The condition of the ground water monitoring system shall be recorded in the post-closure logbook following each sampling event. Monitoring of the groundwater wells shall be conducted as described in the groundwater-monitoring plan.

Groundwater monitoring wells located within areas accessible to the public will be protected with bollards, and the protective casings replaced with below grade locking covers if deemed necessary for added protection.

2.2.4 Surface Water Monitoring

Surface water monitoring will continue to occur semi-annually for the duration of the post closure period in accordance with the Water Quality Monitoring Plan in the approved North Wake Landfill – Phase II Permit Renewal Application.

2.2.5 Landfill Gas Monitoring and Control System

Operation and maintenance of the landfill gas collection system at the North Wake Landfill is currently being performed by Wake Gas Producers, Inc. under contract with Wake County Solid Waste Management. Wake Gas Producers shall also be responsible for any upgrades to the system to include servicing or replacement of any collection system component (e.g. blower/vacuum, flare station, individual wellheads, condensate sumps, etc.). Wake Gas Producers will also be responsible for adjusting the gas collection system to maintain gas quality for sale to neighboring Mallinckrodt Pharmaceuticals. Wake County will, however, be responsible for maintaining the perimeter LFG migration control system at the closed (unlined) North Wake landfill, as well as monitoring and adjusting the perimeter system to control offsite migration. Permanent gas monitoring wells have been installed at the landfill property boundary to monitor for migration, both for the unlined and Subtitle D landfills.

Inspection of the landfill gas monitoring and control system will continue to take place on a quarterly basis to include any temporary or permanent structures onsite. The quarterly inspection shall also verify the condition of the monitoring wells and their protective casings, concrete bases and locks, as well as monitor the perimeter of the landfill for offsite migration and conduct quarterly sweeps of each landfill for landfill gas emissions. A summary of each inspection shall be recorded in the post-closure logbook along with photographs of any items of concern.

Testing of the monitoring wells and onsite buildings shall be conducted as described in the monitoring plan provided in Section 4 – Operation Plan, Appendix B, entitled "Landfill Gas Control Plan."

Gas monitoring wells found to be in need of repair or replacement will be repaired or replaced immediately.

The gas migration control system, currently in place around the perimeter of the closed (unlined) North Wake landfill, will not be accessible to the public during this

phase of the reuse project. Protection of the gas wells adjacent to the loop road on the top of the Subtitle D landfill and along pedestrian walkways to the top of the landfill will be protected by either fencing or signage. Additional protection will be installed if deemed necessary (e.g. wellhead locking devices, below grade vaults w/locking covers).

2.2.6 Erosion and Sedimentation Control System

The post-closure erosion and sedimentation control system for the Subtitle D landfill will include stormwater diversion berms and downdrains located on the landfill cap surface; the perimeter drainage ditch and sedimentation basins. Three sedimentation basins will be operational at the beginning of the post-closure period. As park development expands, removal of the sedimentation basins is proposed, since the site will be stabilized.

Concentrated flows resulting from the removal of the sedimentation basins will be diffused using appropriate measures designed for the 10-year, 24-hour design storm event.

Additional features, including bio-retention basins will be utilized as necessary to help control runoff from impervious areas. The design of the bio-retention basins and other features will meet all applicable local, State and Federal guidelines for stormwater control.

Inspection of the erosion and sedimentation control system shall occur semi-annually and after storm events exceeding 1-inch of precipitation. During each inspection, the elements of the system including ditches, pipes, ponds, and inlet/outlet structures will be checked for obstructions and damage. Ditches and diversion berms shall be inspected for erosion of the side slopes, loss of vegetative cover, shifting of riprap, excessive buildup of sediment, or any other condition that may prevent proper functioning. Drainage piping shall be checked for obstructions and the inlets/outlets inspected for undercutting. The sediment levels shall be monitored to determine if sediment removal is required. The condition of all dissipation devices and outfalls will also be observed for excessive erosion and/or deterioration. Following each inspection, a summary report will be entered in the post-closure logbook along with photographs of any items of concern.

Maintenance and/or repairs should be performed as prescribed by the inspectors review.

2.2.8 Certification of Post-Closure

Every 5 years, a certification verifying that post-closure care was performed in accordance with the post-closure plan and signed by a Professional Engineer licensed in the State of North Carolinawill be made part of the operating record. The County will notify the SWS when each certification has been placed in the operating record.

2.2.9 Name of Individual Responsible for Post-Closure Maintenance of the Site

Mr. David Cooke, County Manager, or his designee will be responsible for operations and maintenance of the site during the post-closure period. Mr. Cooke can be reached at the following address:

David Cooke
County Manager
Wake County
336 Fayetteville Street Mall
Raleigh, NC 27602

Mr. Cooke most likely will not be employed with Wake County throughout the entire 30-year post-closure period. A new individual will be appointed at the time Mr. Cooke's employment with the County ends.

2.3 Financial Assurance

Wake County will submit a financial assurance package to SWS in accordance with the criteria set forth under Rule .1628. A detailed cost estimate for post-closure care has been prepared and is provided herein and a copy has been placed in the operating record. The cost estimate is based on 30 years of post-closure care. Each year, the estimate will be adjusted for inflation and any changes to the activities of post-closure care.

Table 2
Post Closure Cost Estimate
North Wake Subtitle D Landfill
Wake County, North Carolina

	Unit Price	Unit	Quantity	Total
Administration	$7,980.00	Yr.	30	$239,400
Monitoring				
20 Groundwater Wells Sampled and Analyzed bi-annually for 30 years	$960.00	Ea.	1,200	$1,152,000
4 Surface Water Locations Sampled and Analyzed bi-annually for 30 years	$720.00	Ea.	240	$172,800
14 Landfill Gas Wells Sampled and Analyzed Quarterly for 30 years	$240.00	Ea.	1,680	$403,200
Maintenance				
Fencing, Gates, Signs, etc.	$600.00	Yr.	30	$18,000
Access Roads	$2,400.00	Yr.	30	$72,000
Mowing	$3,600.00	Yr.	30	$108,000
Stormwater Structures	$3,600.00	Yr.	30	$108,000
Leachate Collection and Storage System	$15,000.00	Yr.	30	$450,000
Final Cover System	$18,000.00	Yr.	30	$540,000
Groundwater and Gas Monitoring Wells	$3,500.00	Yr.	30	$105,000
Leachate Treatment	$30,000.00	Yr.	30	$900,000
Subtotal				$4,122,000
Contingency (15%)				$618,400
Total Post Closure Cost				$4,886,800

Appendix A
Leachate Pond Decommissioning

Introduction

The existing leachate storage pond at the North Wake Subtitle D Landfill (landfill) is a lined storage pond used for temporary containment of the leachate generated from the Subtitle D landfill. The leachate storage pond liner system is an impervious liner system that includes from bottom to top:

- a 24-inch-thick compacted clay liner (hydraulic conductivity (k_v) $\leq 1 \times 10^{-7}$ centimeters per second (cm/sec));
- a 60-mil high density polyethylene (HDPE) geomembrane; and
- a concrete fabric formed lined protective layer.

Leachate from the leachate storage pond gravity drains into a leachate pump station west of the existing leachate storage pond, which discharges into the City of Raleigh Sanitary Sewer System as allowed under Permit No. NC0029033 (**See Attachment 1**). As permitted, Wake County is allowed to discharge at a rate up to 125,000 gallons per day (gpd) to the City of Raleigh Sanitary Sewer System provided that pH is between 6.0 and 10.0 standard units and the sum of total toxic organic compounds (TTO) with detected concentrations greater than .01 mg/L is less than 2.13 mg/L.

Completion of the North Wake Landfill closure will eliminate stormwater infiltration, consequently reducing leachate generation and eliminating the need for future onsite leachate storage. For this reason, the leachate storage pond is proposed for decommissioning under the current Phase 2 closure contract. The decommissioning of the pond under the current contract will allow disposal of debris generated from the decommissioning of the leachate storage pond within the landfill.

Leachate Data and Calculations

Quantity Validation

Since the proposed plan is to decommission the leachate storage pond under the current Phase 2 closure contract prior to complete closure of the landfill, the leachate generation rates were modeled for waste depths at the time of closure and prior to installation of the cover cap system. Using the US EPA HELP Model 3.07 the North Wake Subtitle D Landfill was modeled to estimate the peak daily and average annual leachate generation rates at the time of closure. The HELP Model results included in **Attachment No. 2** estimate that the average and peak daily leachate generation rates are 122.5 and 710 gallons per acre per day (gpad), respectively.

With a lined footprint of approximately 67 acres, the resulting average and peak daily leachate discharge rates for the landfill at closure are 8,210 and 47,570 gpd

respectively. These rates are well below the maximum permitted discharge rate of 125,000 gpd.

To validate the HELP Model Results and provide further justification that removal of the leachate storage pond is appropriate, data from Cells 1 and 2 of the Delaware Solid Waste Authority's (DSWA's) Southern Solid Waste Management Center (SSWMC) has been provided for comparison. The data was selected as a comparison data set because the DSWA maintains complete records of leachate flow from individual landfill cells; Cells 1 and 2 are Subtitle D lined cells closed in 1997 using an exposed geomembrane; and the average annual precipitation for Raleigh, North Carolina, and Georgetown, Delaware are similar at 42.46 inches and 43.36 inches per year respectively. The similarity in annual precipitation supports selecting the DSWA SSWMC Cells 1 and 2 for comparison because precipitation is the main component in leachate generation.

Figure A-1 shows a line graph of leachate flow from the SSWMC Cells 1 and 2 at the time of closure through November, 2006. As shown, the maximum average daily flow rate occurs near the closure date and is approximately 600 gpad, which is less than the peak daily leachate generation rate of 710 gpad as estimated by the HELP Model results. Review of the complete leachate flow records for Cells 1 and 2 provided in **Attachment 3** shows that the maximum average leachate flow rate for any one month during the life of Cells 1 and 2 is 1,420 gpad. Although not anticipated, if this flow rate were realized at the North Wake Landfill following the decommissioning of the leachate pond, the total flow rate for the landfill would be approximately 95,140 gpd, which is still less than the maximum allowable discharge rate of 125,000 gpd.

Figure A-1
SSWMF Cells 1 and 2 Leachate Flow

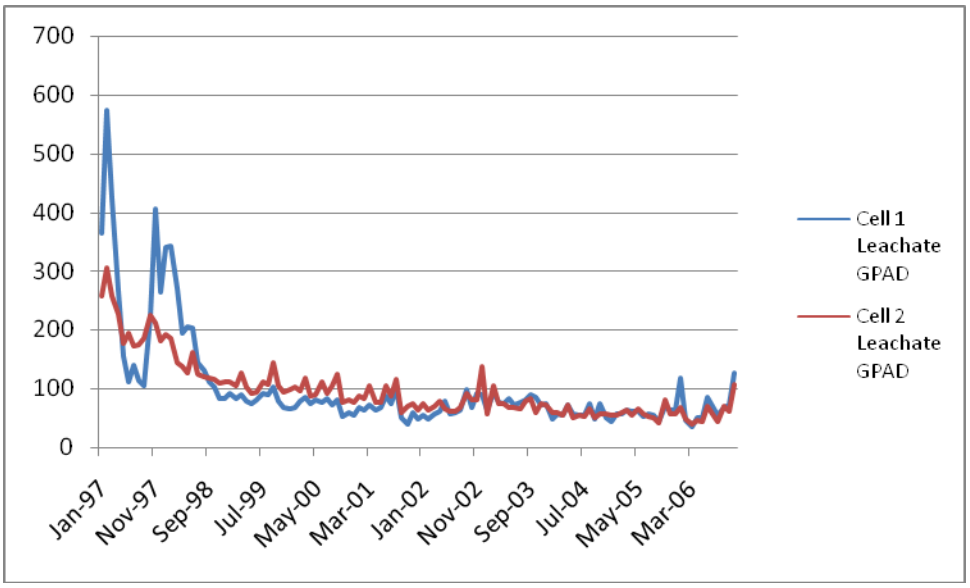

Current monitoring of leachate generation rates indicates that leachate generation rates are significantly below the permitted discharge rate of 125,000 gpd. As shown in **Attachment 4** the average daily discharge rate from December 18, 2006 to October 2, 2008 is 9,690 gallons per day - 12.9 times lower than the permitted discharge rate.

Based on monitoring records from December 18, 2006 to October 2, 2008, the maximum average daily discharge rate occurred during January, 2007. The average daily discharge rate during the January 2007 sampling event was 99,209 gallons per day. Of the other 9 recorded sampling events from December 18, 2006 to October 2, 2008, 8 of the 9 events generated an average daily discharge rate less than one-half of the maximum average daily discharge rate of 99,209 gallons per day. The one exception was during August 2007, when an average daily discharge rate of 63,408 gallons per day was observed.

As the area of the impermeable cover cap system is increased through the ongoing closure project leachate generation potential is constantly decreasing. As a result, anticipated discharge rates should further decrease from the observed discharge rates presented in **Attachment 4**.

Quality Validation

As indicated above, leachate discharged from the landfill is required to have a pH between 6.0 and 10.0 standard units and the sum of TTOs with detected concentrations greater than .01 mg/L, must be less than 2.13 mg/L. The historical leachate quality data has not exceeded these conditions to date and based on the nature of leachate, the leachate quality is not expected to fall outside of the limits following landfill closure.

The pH of leachate varies with age of the waste. Leachate pH drops during the acid formation phase of anaerobic decomposition which typically occurs within the first year and then increases during the methane formation phase until it stabilizes in a range between 6 and 8. Since no new waste is being placed in the landfill it is reasonable to assume that the pH will remain within the required limits for discharge to the City of Raleigh Sanitary Sewer System.

The TTOs are not expected to vary significantly from the historical data. Therefore, an exceedance in TTOs is not expected.

Sampling and Analysis Plan

In preparation for the decommissioning of the existing leachate storage pond, the following sampling plan has been developed to determine if any contamination has occurred below the leachate storage pond liner.

First, the leachate storage pond will be drained and a bypass pumping system will be installed to divert leachate around the pond and into the leachate pump station west of the leachate storage pond. Then, three cored samples will be extracted from the leachate pond liner system. The concrete and geomembrane components will be

visually inspected and a written summary of the visual inspection will be provided in the final sampling report. The clay liner will be analyzed for North Carolina Appendix II Total Volatile Organic Compounds (VOCs) by EPA Method 8260, Total Semi Volatile Organic Compounds (SVOCs) by EPA Method 8270, Polychlorinated biphenyls (PCBs) by EPA Method 8082, Pesticides by EPA Method 8081, Herbicides by EPA Method 8151, and Total Metals by EPA Method 6010 and Mercury by EPA Method 7470. All analytical results will be included in the final sampling report.

If the analytical results do not detect contaminant concentrations greater than the respective remediation goals provided in the North Carolina Division of Waste Management Inactive Hazardous Site Branch Health Based Soil Remediation Goals Table, then no further action will be required other than to perforate and breakup the remaining pond liner in place, as described below.

If analytical results indicate concentrations of contaminants higher than the respective remediation goal, the concrete and geomembrane liners will be completely removed and properly disposed of within the landfill. Upon removal of the concrete and geomembrane liners, the vertical and horizontal contamination limits in the underlying clay and subgrade soils will be delineated through visual and analytical techniques.

Leachate Storage Pond Decommissioning Plan

Prior to decommissioning the leachate storage pond, the landfill's leachate collection system will be connected to City of Raleigh sanitary sewer, north of the leachate pond. The leachate pump station west of the existing leachate storage pond will be decommissioned and a gravity system will be installed immediately downstream of the existing solid 10-inch HDPE header pipe exiting the landfill as shown in Figure A-2. An HDPE lined concrete manhole will be connected to the existing 10-inch HDPE header discharging from the landfill to allow flow monitoring and sampling of the leachate prior to discharging into the City of Raleigh sanitary sewer. This sampling system will provide means to extract a 24-hour composite sample in compliance with the City of Raleigh user permit for discharge to the sanitary sewer system. A 2-inch connection from the gas condensate line directly to the manhole will also be installed to allow the condensate from the gas collection system to first discharge into the wet well and then to the pump station.

Based on results of the pond liner system analysis the pond will be decommissioned in one of two ways. If analysis indicates that no contaminants are present in the clay liner, then the concrete lined surface of the leachate storage pond will be cleaned to remove all traces of waste. The cleaned fabric formed concrete liner and the geomembrane and clay liners will be penetrated multiple times along the pond bottom to promote drainage through the leachate storage pond bottom. The liner penetrations will be filled with common fill and the leachate storage pond will be backfilled to grade, and sloped to provide a natural drainage pattern for surface runoff. In addition, approximately five feet of the fabric formed concrete and underlying geomembrane and clay liners will be removed from the rim of the leachate

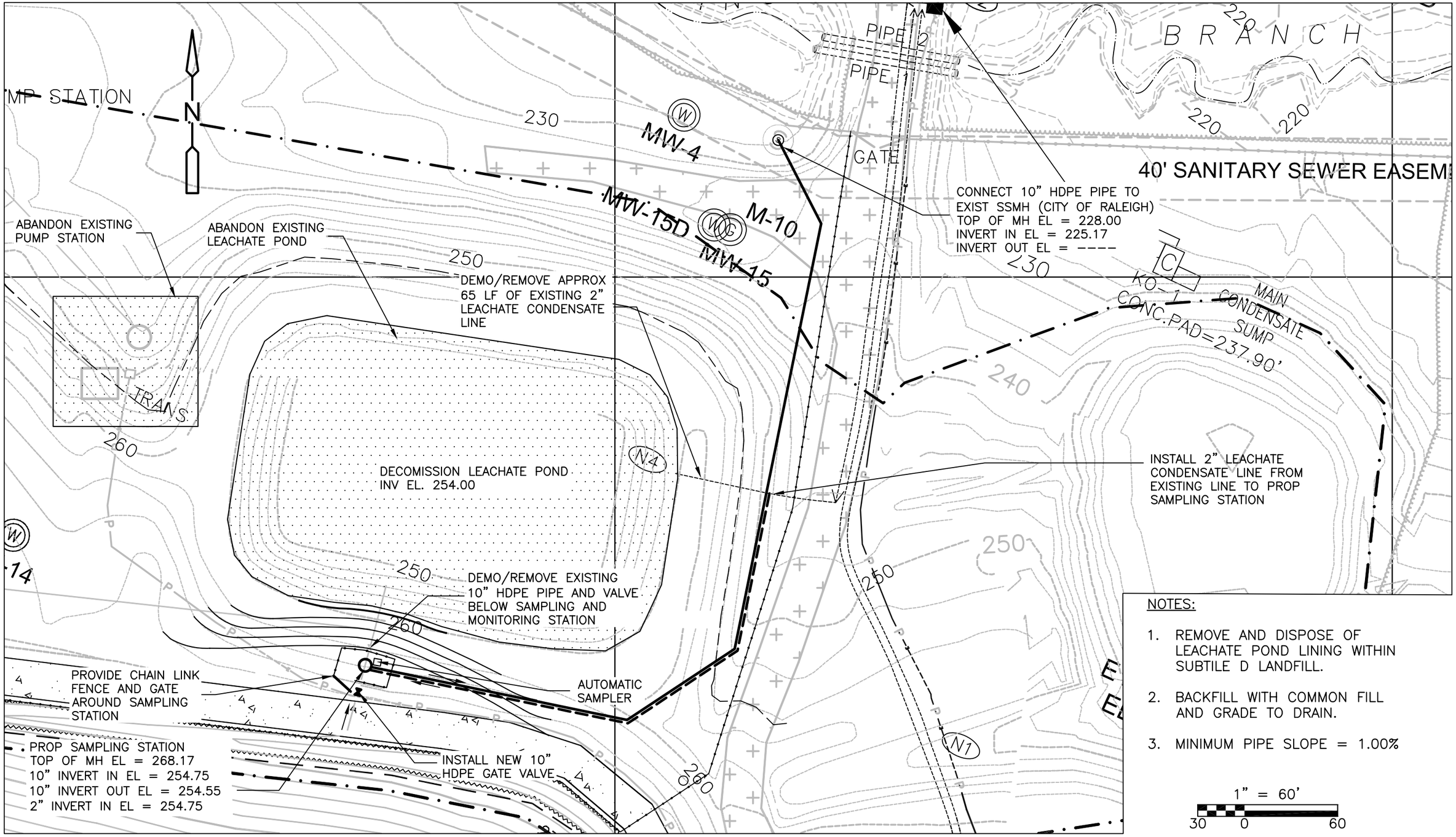

NOTES:

1. REMOVE AND DISPOSE OF LEACHATE POND LINING WITHIN SUBTILE D LANDFILL.
2. BACKFILL WITH COMMON FILL AND GRADE TO DRAIN.
3. MINIMUM PIPE SLOPE = 1.00%

CDM

DATE 10-28-2008

FIGURE NO.

A-2

PERMIT SET ONLY

storage pond along the entire pond perimeter to promote lateral migration of stormwater infiltration and prevent saturation of the surface materials.

If contaminants are present in the clay liner, the fabric formed concrete and geomembrane liner system will be completely removed and properly disposed of within the landfill. As previously discussed in the sampling plan, the vertical and horizontal contamination limits in the underlying clay and subgrade soils will be delineated through visual and analytical techniques and the contaminated soils then removed and disposed of within the landfill. The vertical and horizontal contamination limits will be recorded and provided in the final sampling report.

Historical Groundwater Monitoring Data

Monitoring wells MW-15 and MW-15d are directly down-gradient of the leachate storage pond (see Figure A-3). Table 3 A-D in **Attachment 5** provides groundwater quality for the entire site. As shown on Table 3A in **Attachment 5**, wells MW-15 and MW-15d have had historic detections of metals. These concentrations are similar to those in the background wells for the site (MW-11 and MW-11d) and for most of the other compliance wells. Statistical analyses continually indicate that metals detections in the compliance wells at the North Wake Subtitle D Landfill are not significant and are, therefore, naturally occurring at the site.

In addition, samples across the site - including the background wells - have had very low-level (estimated) detections of VOCs. A review of the VOC compounds and concentrations indicates that the detections are mostly common laboratory contaminants and not indicative of landfill releases.

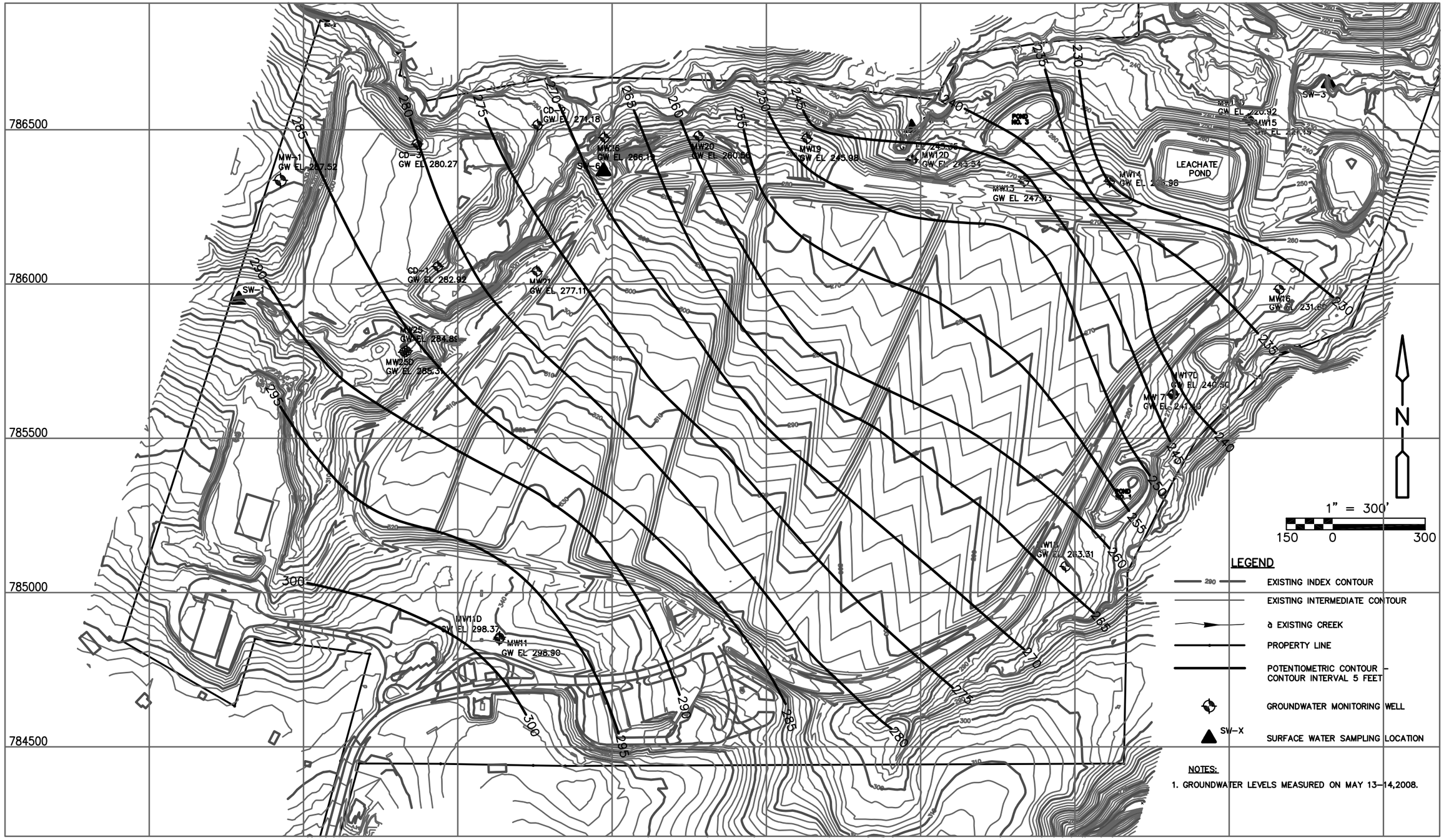

CDM Camp Dresser & McKee

Figure A–3
NORTH WAKE LINED LANDFILL
POTENTIOMETRIC CONTOUR MAP

ATTACHMENT 1

City of Raleigh

PERMIT

Industrial User Pretreatment Permit (IUP)
To Discharge Wastewater Under the
Industrial Pretreatment Program

LAND
IUP Number

40 CFR Category

In compliance with the provisions of North Carolina General Statute 143-215.1, any applicable federal categorical pretreatment regulations, all other lawful standards and regulations promulgated and adopted by the North Carolina Environmental Management Commission, and the City of Raleigh Sanitary Sewer Use Ordinance. The following Industry, hereafter referred to by name or as the permittee:

Industry name, permittee:	**Wake County North Wake Landfill**
Facility Located at Street Address	**9004 Deponie Drive**
City	**Raleigh**
State, Zip	**North Carolina 27614**

is hereby authorized to discharge wastewater from the facility located at the above listed address into the sanitary sewer collection system and the wastewater treatment facility of the City of Raleigh listed below:

WWTP name:	**Neuse River Wastewater Treatment Plant**
NPDES Number:	**NC0029033**
WWTP Address:	**P. O. Box 590**
City, State, Zip	**Raleigh, North Carolina, 27602**

in accordance with effluent limitations, monitoring requirements, and all other conditions set forth in Parts I, II, and III of this Industrial User Pretreatment Permit (IUP).

Effective date, this permit and the authorization to discharge shall become effective at midnight on this date:.	**July 1, 2004**
Expiration date, this permit and the authorization to discharge shall expire at midnight on this date:.	**December 31, 2008**

June 17, 2004
Date signed

H. Dale Crisp, Director, Public Utilities

ATTACHMENT 2

```
******************************************************************************
****

******************************************************************************
*****
 **
**
 **
**
 **              HYDROLOGIC EVALUATION OF LANDFILL PERFORMANCE
**
 **                HELP MODEL VERSION 3.07  (1 NOVEMBER 1997)
**
 **                  DEVELOPED BY ENVIRONMENTAL LABORATORY
**
 **                    USAE WATERWAYS EXPERIMENT STATION
**
 **             FOR USEPA RISK REDUCTION ENGINEERING LABORATORY
**
 **
**
 **
**

******************************************************************************
*****

******************************************************************************
*****


 PRECIPITATION DATA FILE:    C:\HELP3\RAL_PREC.D4
 TEMPERATURE DATA FILE:      C:\HELP3\RAL_TEMP.D7
 SOLAR RADIATION DATA FILE:  C:\HELP3\RAL_SOL.D13
 EVAPOTRANSPIRATION DATA:    C:\HELP3\RAL_EVAP.D11
 SOIL AND DESIGN DATA FILE:  C:\HELP3\RAL_SOIL.D10
 OUTPUT DATA FILE:           C:\HELP3\ral\Ral_1.OUT


 TIME:  13:30     DATE:   4/14/2008



******************************************************************************
*****

      TITLE:     Wake County, North Wake Landfill
                 North Wake Subtitle D Landfill
                 Leachate Generation at Closure
```

```
*************************************************************************
*****

      NOTE:  INITIAL MOISTURE CONTENT OF THE LAYERS AND SNOW WATER WERE
               COMPUTED AS NEARLY STEADY-STATE VALUES BY THE PROGRAM.


                                LAYER  1
                                --------

                   TYPE 1 - VERTICAL PERCOLATION LAYER
                       MATERIAL TEXTURE NUMBER   0
          THICKNESS                   =     12.00   INCHES
          POROSITY                    =      0.4570 VOL/VOL
          FIELD CAPACITY              =      0.1310 VOL/VOL
          WILTING POINT               =      0.0580 VOL/VOL
          INITIAL SOIL WATER CONTENT  =      0.2458 VOL/VOL
          EFFECTIVE SAT. HYD. COND.   =  0.999999975000E-04 CM/SEC


                                LAYER  2
                                --------

                   TYPE 1 - VERTICAL PERCOLATION LAYER
                       MATERIAL TEXTURE NUMBER   0
          THICKNESS                   =   2160.00   INCHES
          POROSITY                    =      0.6710 VOL/VOL
          FIELD CAPACITY              =      0.2970 VOL/VOL
          WILTING POINT               =      0.0770 VOL/VOL
          INITIAL SOIL WATER CONTENT  =      0.3015 VOL/VOL
          EFFECTIVE SAT. HYD. COND.   =  0.999999975000E-04 CM/SEC


                                LAYER  3
                                --------

                     TYPE 2 - LATERAL DRAINAGE LAYER
                       MATERIAL TEXTURE NUMBER  21
          THICKNESS                   =     24.00   INCHES
          POROSITY                    =      0.3970 VOL/VOL
          FIELD CAPACITY              =      0.0320 VOL/VOL
          WILTING POINT               =      0.0130 VOL/VOL
          INITIAL SOIL WATER CONTENT  =      0.0434 VOL/VOL
          EFFECTIVE SAT. HYD. COND.   =  0.300000012000     CM/SEC
          SLOPE                       =      5.00   PERCENT
          DRAINAGE LENGTH             =   1300.0    FEET
```

LAYER 4

TYPE 4 - FLEXIBLE MEMBRANE LINER
MATERIAL TEXTURE NUMBER 35

THICKNESS	=	0.06	INCHES
POROSITY	=	0.0000	VOL/VOL
FIELD CAPACITY	=	0.0000	VOL/VOL
WILTING POINT	=	0.0000	VOL/VOL
INITIAL SOIL WATER CONTENT	=	0.0000	VOL/VOL
EFFECTIVE SAT. HYD. COND.	=	0.199999996000E-12	CM/SEC
FML PINHOLE DENSITY	=	0.00	HOLES/ACRE
FML INSTALLATION DEFECTS	=	0.00	HOLES/ACRE
FML PLACEMENT QUALITY	=	1 - PERFECT	

GENERAL DESIGN AND EVAPORATIVE ZONE DATA

NOTE: SCS RUNOFF CURVE NUMBER WAS COMPUTED FROM DEFAULT SOIL DATA BASE USING SOIL TEXTURE # 5 WITH A POOR STAND OF GRASS, A SURFACE SLOPE OF 5.% AND A SLOPE LENGTH OF 200. FEET.

SCS RUNOFF CURVE NUMBER	=	78.10	
FRACTION OF AREA ALLOWING RUNOFF	=	100.0	PERCENT
AREA PROJECTED ON HORIZONTAL PLANE	=	1.000	ACRES
EVAPORATIVE ZONE DEPTH	=	10.0	INCHES
INITIAL WATER IN EVAPORATIVE ZONE	=	2.379	INCHES
UPPER LIMIT OF EVAPORATIVE STORAGE	=	4.570	INCHES
LOWER LIMIT OF EVAPORATIVE STORAGE	=	0.580	INCHES
INITIAL SNOW WATER	=	0.000	INCHES
INITIAL WATER IN LAYER MATERIALS	=	655.189	INCHES
TOTAL INITIAL WATER	=	655.189	INCHES
TOTAL SUBSURFACE INFLOW	=	0.00	INCHES/YEAR

EVAPOTRANSPIRATION AND WEATHER DATA

NOTE: EVAPOTRANSPIRATION DATA WAS OBTAINED FROM RALEIGH NORTH CAROLINA

STATION LATITUDE	=	35.87	DEGREES
MAXIMUM LEAF AREA INDEX	=	0.00	
START OF GROWING SEASON (JULIAN DATE)	=	86	
END OF GROWING SEASON (JULIAN DATE)	=	310	
EVAPORATIVE ZONE DEPTH	=	10.0	INCHES

AVERAGE ANNUAL WIND SPEED = 7.70 MPH
AVERAGE 1ST QUARTER RELATIVE HUMIDITY = 66.00 %
AVERAGE 2ND QUARTER RELATIVE HUMIDITY = 70.00 %
AVERAGE 3RD QUARTER RELATIVE HUMIDITY = 78.00 %
AVERAGE 4TH QUARTER RELATIVE HUMIDITY = 72.00 %

NOTE: PRECIPITATION DATA WAS SYNTHETICALLY GENERATED USING
COEFFICIENTS FOR RALEIGH NORTH CAROLINA

NORMAL MEAN MONTHLY PRECIPITATION (INCHES)

JAN/JUL	FEB/AUG	MAR/SEP	APR/OCT	MAY/NOV	JUN/DEC
3.55	3.43	3.69	2.91	3.67	3.66
4.38	4.44	3.29	2.73	2.87	3.14

NOTE: TEMPERATURE DATA WAS SYNTHETICALLY GENERATED USING
COEFFICIENTS FOR RALEIGH NORTH CAROLINA

NORMAL MEAN MONTHLY TEMPERATURE (DEGREES FAHRENHEIT)

JAN/JUL	FEB/AUG	MAR/SEP	APR/OCT	MAY/NOV	JUN/DEC
39.60	41.60	49.30	59.50	67.20	73.90
77.70	77.00	71.00	59.70	50.00	42.00

NOTE: SOLAR RADIATION DATA WAS SYNTHETICALLY GENERATED USING
COEFFICIENTS FOR RALEIGH NORTH CAROLINA
AND STATION LATITUDE = 35.87 DEGREES

****

AVERAGE MONTHLY VALUES IN INCHES FOR YEARS 1 THROUGH 5

	JAN/JUL	FEB/AUG	MAR/SEP	APR/OCT	MAY/NOV	JUN/DEC
PRECIPITATION						
TOTALS	3.26	2.82	4.37	2.63	3.53	5.42
	4.57	6.26	2.81	3.77	2.52	2.90

```
     STD. DEVIATIONS        2.96     0.95     1.30     1.89     2.64
1.99
                            2.29     5.93     1.69     2.69     1.66
1.28

   RUNOFF
   ------
     TOTALS                 0.223    0.045    0.161    0.004    0.225
0.168
                            0.232    0.817    0.406    0.281    0.029
0.148

     STD. DEVIATIONS        0.397    0.045    0.278    0.005    0.504
0.175
                            0.168    1.693    0.779    0.470    0.041
0.254

   EVAPOTRANSPIRATION
   ------------------
     TOTALS                 1.538    1.959    2.367    2.636    2.882
3.376
                            3.250    2.956    2.037    1.924    1.683
1.268

     STD. DEVIATIONS        0.284    0.297    0.403    1.043    1.201
0.971
                            1.353    1.111    1.036    0.670    0.677
0.165

   LATERAL DRAINAGE COLLECTED FROM LAYER  3
   ----------------------------------------
     TOTALS                 0.1026   0.0798   0.1061   0.1744   0.1131
0.0869
                            0.2672   0.2171   0.1331   0.1143   0.1229
0.1292

     STD. DEVIATIONS        0.0107   0.0535   0.0831   0.2384   0.1720
0.0452
                            0.1323   0.1621   0.0795   0.0981   0.0603
0.1048

   PERCOLATION/LEAKAGE THROUGH LAYER  4
   -------------------------------------
     TOTALS                 0.0000   0.0000   0.0000   0.0000   0.0000
0.0000
                            0.0000   0.0000   0.0000   0.0000   0.0000
0.0000

     STD. DEVIATIONS        0.0000   0.0000   0.0000   0.0000   0.0000
0.0000
                            0.0000   0.0000   0.0000   0.0000   0.0000
0.0000
```

```
 ---------------------------------------------------------------------------
-------
                AVERAGES OF MONTHLY AVERAGED DAILY HEADS (INCHES)
 ---------------------------------------------------------------------------
-------


   DAILY AVERAGE HEAD ON TOP OF LAYER  4
   -------------------------------------
     AVERAGES               0.0507   0.0432   0.0525   0.0891   0.0559
0.0444
                            0.1321   0.1073   0.0680   0.0565   0.0628
0.0639

     STD. DEVIATIONS        0.0053   0.0290   0.0411   0.1218   0.0850
0.0231
                            0.0654   0.0801   0.0406   0.0485   0.0308
0.0518


***************************************************************************
******




***************************************************************************
******

      AVERAGE ANNUAL TOTALS & (STD. DEVIATIONS) FOR YEARS    1 THROUGH
5
 ---------------------------------------------------------------------------
-------
                                       INCHES            CU. FEET
PERCENT
                                 -------------------   -------------   ---
------
  PRECIPITATION                   44.86    (   9.753)     162856.3
100.00

  RUNOFF                           2.739   (  3.1403)       9941.05
6.104

  EVAPOTRANSPIRATION              27.876   (  0.9707)     101190.28
62.135

  LATERAL DRAINAGE COLLECTED      1.64665 (  0.78993)      5977.352
3.67032
    FROM LAYER  3

  PERCOLATION/LEAKAGE THROUGH     0.00000 (  0.00000)         0.013
0.00001
    LAYER  4
```

```
  AVERAGE HEAD ON TOP             0.069 (    0.033)
    OF LAYER  4

  CHANGE IN WATER STORAGE        12.603   (  6.0718)      45747.70
28.091


*************************************************************************
******



*************************************************************************
*****

                  PEAK DAILY VALUES FOR YEARS    1 THROUGH    5
    ---------------------------------------------------------------------
---
                                                  (INCHES)      (CU. FT.)
                                                 ----------   ------------
-
       PRECIPITATION                               5.22         18948.600

       RUNOFF                                      2.706         9821.3838

       DRAINAGE COLLECTED FROM LAYER  3            0.02614
94.89672

       PERCOLATION/LEAKAGE THROUGH LAYER  4        0.000000
0.00016

       AVERAGE HEAD ON TOP OF LAYER  4             0.401

       MAXIMUM HEAD ON TOP OF LAYER  4             0.799

       LOCATION OF MAXIMUM HEAD IN LAYER  3
             (DISTANCE FROM DRAIN)                 0.0 FEET

       SNOW WATER                                  1.67          6061.1182


       MAXIMUM VEG. SOIL WATER (VOL/VOL)                   0.4570

       MINIMUM VEG. SOIL WATER (VOL/VOL)                   0.1164


        ***  Maximum heads are computed using McEnroe's equations.  ***

             Reference:  Maximum Saturated Depth over Landfill Liner
                         by Bruce M. McEnroe, University of Kansas
                         ASCE Journal of Environmental Engineering
                         Vol. 119, No. 2, March 1993, pp. 262-270.
```

****
*****

****
*****

FINAL WATER STORAGE AT END OF YEAR 5

LAYER	(INCHES)	(VOL/VOL)
1	3.3213	0.2768
2	713.8151	0.3305
3	1.0655	0.0444
4	0.0000	0.0000
SNOW WATER	0.000	

****
*****

****
*****

ATTACHMENT 3

SSWMC Historical
Leachate Generation and
Movement

Month/Year	Cell 1 (GPAD)	Cell 2 (GPAD)
Jan-86		
Feb-86	25	0
Mar-86	29	0
Apr-86	34	0
May-86	22	0
Jun-86	18	0
Jul-86	31	0
Aug-86	45	0
Sep-86	27	0
Oct-86	23	0
Nov-86	26	0
Dec-86	74	0
Jan-87	116	0
Feb-87	180	0
Mar-87	146	0
Apr-87	106	0
May-87	145	0
Jun-87	152	0
Jul-87	132	0
Aug-87	72	0
Sep-87	61	0
Oct-87	69	0
Nov-87	64	0
Dec-87	143	0
Jan-88	193	0
Feb-88	465	0
Mar-88	266	0
Apr-88	346	0
May-88	222	0
Jun-88	129	0
Jul-88	79	0
Aug-88	98	0
Sep-88	133	0
Oct-88	90	0
Nov-88	239	0
Dec-88	155	0
Jan-89	190	0
Feb-89	196	0
Mar-89	516	0
Apr-89	446	0
May-89	348	0
Jun-89	301	0
Jul-89	0	0
Aug-89	0	0
Sep-89	0	0
Oct-89	0	0
Nov-89	0	0
Dec-89	0	0
Jan-90	304	58
Feb-90	229	38

Mar-90	168	28
Apr-90	220	48
May-90	178	47
Jun-90	146	17
Jul-90	121	37
Aug-90	114	18
Sep-90	76	11
Oct-90	72	33
Nov-90	74	35
Dec-90	125	59
Jan-91	267	176
Feb-91	104	96
Mar-91	163	107
Apr-91	133	128
May-91	114	84
Jun-91	143	90
Jul-91	136	90
Aug-91	190	95
Sep-91	115	56
Oct-91	123	61
Nov-91	109	64
Dec-91	175	58
Jan-92	159	60
Feb-92	170	82
Mar-92	207	129
Apr-92	134	74
May-92	114	88
Jun-92	142	115
Jul-92	97	74
Aug-92	181	344
Sep-92	180	313
Oct-92	131	148
Nov-92	208	165
Dec-92	261	144
Jan-93	321	155
Feb-93	199	91
Mar-93	312	146
Apr-93	227	202
May-93	174	123
Jun-93	119	153
Jul-93	92	111
Aug-93	91	139
Sep-93	107	217
Oct-93	93	174
Nov-93	216	165
Dec-93	294	210
Jan-94	298	1,365
Feb-94	515	798
Mar-94	462	1,420
Apr-94	331	1,413
May-94	170	357
Jun-94	150	281
Jul-94	117	272
Aug-94	253	361
Sep-94	232	280
Oct-94	139	246
Nov-94	250	236

Dec-94	146	228
Jan-95	260	217
Feb-95	253	210
Mar-95	300	223
Apr-95	134	177
May-95	273	229
Jun-95	149	206
Jul-95	132	179
Aug-95	102	146
Sep-95	82	163
Oct-95	192	169
Nov-95	321	231
Dec-95	288	190
Jan-96	833	347
Feb-96	684	366
Mar-96	342	225
Apr-96	747	479
May-96	343	462
Jun-96	248	244
Jul-96	276	312
Aug-96	187	223
Sep-96	375	240
Oct-96	316	245
Nov-96	135	189
Dec-96	519	308
Jan-97	364	258
Feb-97	573	306
Mar-97	423	258
Apr-97	267	227
May-97	155	177
Jun-97	112	195
Jul-97	140	172
Aug-97	114	174
Sep-97	105	186
Oct-97	222	226
Nov-97	405	211
Dec-97	264	181
Jan-98	340	193
Feb-98	343	185
Mar-98	271	144
Apr-98	194	138
May-98	204	128
Jun-98	202	163
Jul-98	144	124
Aug-98	131	120
Sep-98	111	119
Oct-98	102	116
Nov-98	82	110
Dec-98	83	113
Jan-99	90	112
Feb-99	83	105
Mar-99	90	126
Apr-99	78	102
May-99	75	93
Jun-99	80	95
Jul-99	90	112
Aug-99	89	107

Sep-99	102	144
Oct-99	78	105
Nov-99	68	94
Dec-99	66	100
Jan-00	67	104
Feb-00	78	96
Mar-00	84	119
Apr-00	73	89
May-00	81	90
Jun-00	76	112
Jul-00	82	93
Aug-00	72	105
Sep-00	80	126
Oct-00	51	78
Nov-00	59	83
Dec-00	54	77
Jan-01	67	89
Feb-01	64	83
Mar-01	71	104
Apr-01	63	77
May-01	66	78
Jun-01	86	105
Jul-01	74	89
Aug-01	101	116
Sep-01	50	60
Oct-01	39	71
Nov-01	58	76
Dec-01	48	63
Jan-02	53	75
Feb-02	48	64
Mar-02	56	70
Apr-02	60	80
May-02	79	66
Jun-02	56	61
Jul-02	58	61
Aug-02	63	69
Sep-02	97	92
Oct-02	68	83
Nov-02	92	81
Dec-02	89	139
Jan-03	64	58
Feb-03	94	105
Mar-03	75	74
Apr-03	74	75
May-03	83	68
Jun-03	72	68
Jul-03	75	67
Aug-03	79	80
Sep-03	90	83
Oct-03	85	60
Nov-03	71	74
Dec-03	75	74
Jan-04	48	59
Feb-04	56	59
Mar-04	54	55
Apr-04	72	73
May-04	57	51

Jun-04	54	56
Jul-04	53	54
Aug-04	73	67
Sep-04	47	52
Oct-04	74	58
Nov-04	49	58
Dec-04	43	55
Jan-05	55	56
Feb-05	57	60
Mar-05	62	63
Apr-05	60	56
May-05	61	66
Jun-05	52	57
Jul-05	57	54
Aug-05	55	52
Sep-05	43	42
Oct-05	68	81
Nov-05	64	58
Dec-05	63	57
Jan-06	117	68
Feb-06	45	48
Mar-06	35	40
Apr-06	49	46
May-06	51	45
Jun-06	85	70
Jul-06	68	57
Aug-06	54	45
Sep-06	68	70
Oct-06	71	63
Nov-06	127	108
Dec-06		
Jan-07		
Feb-07		
Mar-07		
Apr-07		
May-07		
Jun-07		
Jul-07		
Aug-07		
Sep-07		
Oct-07		
Nov-07		
Dec-07		
---	---	---
Months	225	225
Minimum	0	0
Maximum	833	1,420
Average	146	120
Total		

ATTACHMENT 4

North Wake Landfill

Leachate Discharge Flow Readings

2007-2008

Date	Time	Flow Meter Reading (gallons)	Comments	Discharge Between Readings (gallons)	Average Daily Discharge (gallons)
12/18/2006	-	76,941,530	Start City of Raleigh Invoice		
1/2/2007	13:39	76,941,530	Start Discharge Event	0	
1/2/2007	13:58	76,943,150	Start Sampling Event	1,620	
1/3/2007	13:58	77,054,360	End Sampling Event	111,210	
1/11/2007	15:09	77,834,410	End Discharge Event	892,880	99,209
1/30/2007	-	77,834,410	End City of Raleigh Invoice	892,880	20,765
2/28/2007	-	77,834,420	Start City of Raleigh Invoice	10	
3/7/2007	11:15	77,834,420	Start Discharge Event	0	
3/7/2007	12:00	77,838,280	Start Sampling event; 26 hours	3,860	
3/8/2007	14:02	77,962,170	End Sampling event; 26 hours	123,890	
3/22/2007	8:35	78,500,560	End Discharge Event	666,140	44,409
3/27/2007	-	78,500,560	End City of Raleigh Invoice	666,140	24,672
3/29/2007	14:45	78,500,560	Start Sampling event; 1.25 hours	0	
3/29/2007	16:00	78,501,420	End Sampling event; 1.25 hours	860	
4/27/2007	-	78,643,800	Start City of Raleigh Invoice	142,380	
5/9/2007	11:45	78,718,650	Start Discharge Event	74,850	
5/9/2007	12:18	78,719,070	Start Sampling Event	420	
5/10/2007	12:03	78,734,960	End Sampling Event	15,890	
5/14/2007	10:14	78,787,030	End Discharge Event	68,380	13,676
5/25/2007	-	78,787,040	Start City of Raleigh Invoice	10	
5/25/2007	-	78,787,040	End City of Raleigh Invoice	143,240	5,116
8/1/2007	10:25	78,787,050	Start Discharge Event	10	
8/1/2007	11:35	78,791,240	Start Sampling Event	4,190	
8/2/2007	11:23	78,871,230	End Sampling Event	79,990	
8/6/2007	7:36	79,104,090	End Discharge Event	317,040	63,408
8/28/2007	-	79,104,090	End City of Raleigh Invoice	317,050	3,337
11/14/2007	14:00	79,104,580	Start Discharge Event	490	
11/14/2007	14:00	79,104,580	Start Sampling Event	0	
11/15/2007	14:00	79,136,380	End Sampling Event	31,800	
11/23/2007	14:00	79,438,110	End Discharge Event	333,530	37,059
12/26/2007	-	79,438,110	Start City of Raleigh Invoice	0	

North Wake Landfill

Leachate Discharge Flow Readings

2007-2008

Date	Time	Flow Meter Reading (gallons)	Comments	Discharge Between Readings (gallons)	Average Daily Discharge (gallons)
1/8/2008	8:42	79,438,120	Start Discharge Event	10	
1/31/2008	11:22	80,297,760	Start Sampling Event	859,640	
2/1/2008	11:22	80,335,840	End Sampling Event	38,080	
2/1/2008	11:22	80,335,840	End Discharge Event	897,720	37,405
2/4/2008	13:30	80,442,180	Start Discharge Event	106,340	
2/4/2008	13:30	80,442,180	Start Sampling Event	0	
2/5/2008	-	80,474,250	End City of Raleigh Invoice	1,036,140	25,272
2/5/2008	13:30	80,479,180	End Sampling Event	4,930	
2/29/2008	8:30	80,834,120	End Discharge Event	391,940	15,678
5/1/2008	12:20	80,834,140	Start Discharge Event	20	
5/27/2008	12:55	81,508,740	Start Sampling Event	674,600	
5/28/2008	12:55	81,563,200	End Sampling Event	54,460	
5/30/2008	21:30	81,741,560	End Discharge Event	907,420	31,290
8/1/2008	11:30	81,741,590	Start Discharge Event	30	
8/4/2008	12:43	81,886,050	Start Sampling Event	144,460	
8/5/2008	12:43	81,934,610	End Sampling Event	48,560	
8/31/2008	10:30	82,819,140	End Discharge Event	1,077,550	35,918
9/10/2008	10:15	82,819,480	Start Discharge Event	340	
9/10/2008	10:18	82,819,480	Start Sampling Event	0	
9/11/2008	10:18	82,867,010	End Sampling Event	47,530	
9/26/2008	17:00	83,222,160	End Discharge Event	402,680	25,168
10/1/2008	10:30	83,222,160	Start Discharge Event	0	
10/1/2008	10:45	83,222,770	Start Sampling Event	610	
10/2/2008	10:45	83,278,700	End Sampling Event	55,930	
10/30/2008	?	?	End Discharge Event - Not Completed		

Discharge between 12/18/06 and 10/2/08: 6,337,170 gallons

Average Daily Discharge between 12/18/06 and 10/2/08: 9,690 gallons

ATTACHMENT 5

Table 3A
Detected Groundwater Constituents - Metals
North Wake Lined Landfill

Monitor Well	Sample Date	Antimony	Arsenic	Barium	Beryllium	Cadmium	Chromium	Cobalt	Copper	Lead	Nickel	Selenium	Silver	Thallium	Vanadium	Zinc
NC2L		**0.0014***	**0.05**	**2**	**0.004***	**0.00175**	**0.05**	**0.07***	**1**	**0.015**	**0.1**	**0.05**	**0.0175**	**0.00028***	**0.0035***	**1.05**
SWSL		**0.006**	**0.010**	**0.1**	**0.001**	**0.001**	**0.01**	**0.01**	**0.01**	**0.01**	**0.05**	**0.01**	**0.01**	**0.0055**	**0.025**	**0.01**
MW-11	31-Oct-95		0.011	0.842	**0.008**		0.024	**0.071**	0.331	**0.026**	0.087				**0.117**	0.314
MW-11	19-Dec-95															
MW-11	26-Feb-96						0.011	0.022								0.106
MW-11	29-Apr-96															0.106
MW-11	27-Nov-96			0.035												
MW-11	22-Apr-97															0.13
MW-11	31-Oct-97															0.066
MW-11	11-May-98															
MW-11	8-Dec-98					**0.0021**										
MW-11	14-Apr-99															
MW-11	30-Nov-99															
MW-11	5-Apr-00					0.0012										
MW-11	18-Dec-00															
MW-11	18-Apr-01															
MW-11	27-Nov-01			0.311					0.0165							0.0297
MW-11	5-Apr-02															
MW-11	5-Nov-02															
MW-11	15-Apr-03															
MW-11	29-Oct-03															
MW-11	21-Apr-04															
MW-11	18-Nov-04															
MW-11	21-Apr-05															
MW-11	11-Nov-05															0.083
MW-11	13-Apr-06															
MW-11	8-Nov-06															0.082
MW-11	20-Apr-07															0.021
MW-11	7-Nov-07			0.332	0.0021					0.012					**0.058**	0.113
MW-11	15-May-08			0.0778J			0.0054J		0.0105	0.00392J			0.00448J	**0.00563**	0.00290J	0.0161
MW-11D	31-Oct-95					**0.002**										
MW-11D	19-Dec-95															
MW-11D	26-Feb-96					0.001										
MW-11D	29-Apr-96															
MW-11D (dup)	29-Apr-96															
MW-11 D	27-Nov-96			0.026												
MW-11D	22-Apr-97															0.054
MW-11D	31-Oct-97															0.026
MW-11D	11-May-98												0.012			0.069
MW-11D	8-Dec-98					**0.0019**										
MW-11D	14-Apr-99															
MW-11D	30-Nov-99															
MW-11D	5-Apr-00															
MW-11D	18-Dec-00															
MW-11D	18-Apr-01															
MW-11D	27-Nov-01															
MW-11D	5-Apr-02															
MW-11D	5-Nov-02															
MW-11D	15-Apr-03															
MW-11D	29-Oct-03															
MW-11D	21-Apr-04															
MW-11D	18-Nov-04															
MW-11D	21-Apr-05															
MW-11D	11-Nov-05															
MW-11D	13-Apr-06															
MW-11D	8-Nov-06															
MW-11D	20-Apr-07															
MW-11D	7-Nov-07															0.016
MW-11D	15-May-08			0.0597J	0.00307		0.00641J		0.00821J	0.00459J			0.00398J	**0.00691**	0.000970J	0.00982J
MW-12	31-Oct-95															
MW-12	19-Dec-95															
MW-12 (dup)	19-Dec-95															
MW-12	26-Feb-96															
MW-12	29-Apr-96															
MW-12	27-Nov-96			0.2				0.005	0.01	0.006					**0.014**	0.028
MW-12	24-Apr-97						0.012									0.11
MW-12	3-Nov-97			0.55	0.0029	0.0013	0.021	0.023		**0.018**					**0.12**	0.31
MW-12	23-Nov-98															
MW-12	14-Apr-99															
MW-12	1-Dec-99															
MW-12	5-Apr-00															
MW-12	18-Dec-00															
MW-12	17-Apr-01															
MW-12	28-Nov-01															
MW-12	3-Apr-02															
MW-12	5-Nov-02					0.0013										
MW-12	15-Apr-03															
MW-12	30-Oct-03															
MW-12	7-Apr-04															
MW-12	18-Nov-04						0.019	0.018							**0.065**	0.05
MW-12	21-Apr-05															
MW-12	11-Nov-05															
MW-12	13-Apr-06															
MW-12	8-Nov-06															
MW-12	20-Apr-07			0.26	0.001				0.037						**0.05**	0.061
MW-12	7-Nov-07			0.266	0.0014				0.031						**0.038**	0.068
MW-12	14-May-08			0.287		0.00068J	0.0181	0.00992J	0.0656	**0.0206**		0.0101			**0.0578**	0.0592

Table 3A
Detected Groundwater Constituents - Metals
North Wake Lined Landfill

Monitor Well	Sample Date	Antimony	Arsenic	Barium	Beryllium	Cadmium	Chromium	Cobalt	Copper	Lead	Nickel	Selenium	Silver	Thallium	Vanadium	Zinc
NC2L		**0.0014***	**0.05**	**2**	**0.004***	**0.00175**	**0.05**	**0.07***	**1**	**0.015**	**0.1**	**0.05**	**0.0175**	**0.00028***	**0.0035***	**1.05**
SWSL		**0.006**	**0.010**	**0.1**	**0.001**	**0.001**	**0.01**	**0.01**	**0.01**	**0.01**	**0.05**	**0.01**	**0.01**	**0.0055**	**0.025**	**0.01**
MW-12D	31-Oct-95															
MW-12D	19-Dec-95															
MW-12D	26-Feb-96															
MW-12D	29-Apr-96															
MW-12 D	27-Nov-96			0.013												
MW-12D	24-Apr-97															
MW-12D	3-Nov-97															
MW-12D	23-Nov-98															
MW-12D	14-Apr-99															
MW-12D	1-Dec-99															
MW-12D	5-Apr-00															
MW-12D	18-Dec-00															
MW-12D (dup)	18-Dec-00					0.0011										
MW-12D	17-Apr-01															
MW-12D	28-Nov-01															
MW-12D	3-Apr-02															
MW-12D	5-Nov-02															
MW-12D	15-Apr-03															
MW-12D	30-Oct-03															
MW-12D	7-Apr-04															
MW-12D	18-Nov-04															
MW-12D	21-Apr-05															
MW-12D	11-Nov-05															
MW-12D	13-Apr-06															
MW-12D	8-Nov-06															
MW-12D	20-Apr-07															
MW-12D	7-Nov-07															
MW-12D	14-May-08			0.0228J			0.00345J		0.0131	0.00947J						
MW-13	31-Oct-95				0.002		0.022				0.063				**0.044**	0.069
MW-13	19-Dec-95															
MW-13	26-Feb-96															
MW-13	29-Apr-96															
MW-13	27-Nov-96			0.018												
MW-13	24-Apr-97															
MW-13	7-May-98						0.021									
MW-13	23-Nov-98					**0.0068**	**0.059**	**0.019**							**0.081**	0.12
MW-13	14-Apr-99															
MW-13	1-Dec-99															
MW-13	6-Apr-00															
MW-13	18-Dec-00					0.0011	0.0102									
MW-13	17-Apr-01															
MW-13	28-Nov-01	NS	NS	NS	NS	NS	NS	NS	NS	NS	NS	NS	NS	NS	NS	NS
MW-13	3-Apr-02															
MW-13	6-Nov-02															
MW-13	15-Apr-03															
MW-13 (dup)	15-Apr-03															
MW-13	30-Oct-03															
MW-13	8-Apr-04						0.0222									
MW-13 (dup)	8-Apr-04															
MW-13	18-Nov-04						**0.086**	0.033							**0.099**	0.1
MW-13	21-Apr-05															
MW-13	11-Nov-05			0.578			0.0158				**0.109**				**0.217**	0.272
MW-13	13-Apr-06						0.012									
MW-13	8-Nov-06						0.017									
MW-13	20-Apr-07															0.012
MW-13	7-Nov-07			0.157			0.024								**0.03**	0.062
MW-13	13-May-08			0.0446J			0.00748J		0.00466J	0.00881J					**0.00589J**	0.00845J
MW-14	31-Oct-95										0.052					
MW-14	19-Dec-95															
MW-14	26-Feb-96									**0.021**						
MW-14	29-Apr-96						0.013	**0.012**								
MW-14	27-Nov-96			0.011												
MW-14	24-Apr-97															0.098
MW-14	1-Nov-97															0.098
MW-14	7-May-98						0.034				0.088					0.064
MW-14	23-Nov-98															
MW-14 (dup)	23-Nov-98															
MW-14	14-Apr-99															
MW-14	1-Dec-99					0.001										
MW-14	6-Apr-00															
MW-14 (dup)	6-Apr-00															
MW-14	18-Dec-00															
MW-14	17-Apr-01															
MW-14	28-Nov-01															
MW-14	3-Apr-02															
MW-14	5-Nov-02															
MW-14	15-Apr-03					0.0017										
MW-14	29-Oct-03															
MW-14	8-Apr-04															
MW-14	18-Nov-04															
MW-14	21-Apr-05															
MW-14	11-Nov-05															
MW-14	13-Apr-06															
MW-14	8-Nov-06															
MW-14	20-Apr-07															
MW-14	7-Nov-07								0.013							0.025
MW-14	13-May-08			0.0338J			0.00554J		0.00642J	0.00787J						

Table 3A
Detected Groundwater Constituents - Metals
North Wake Lined Landfill

Monitor Well	Sample Date	Antimony	Arsenic	Barium	Beryllium	Cadmium	Chromium	Cobalt	Copper	Lead	Nickel	Selenium	Silver	Thallium	Vanadium	Zinc
NC2L		**0.0014***	**0.05**	**2**	**0.004***	**0.00175**	**0.05**	**0.07***	**1**	**0.015**	**0.1**	**0.05**	**0.0175**	**0.00028***	**0.0035***	**1.05**
SWSL		**0.006**	**0.010**	**0.1**	**0.001**	**0.001**	**0.01**	**0.01**	**0.01**	**0.01**	**0.05**	**0.01**	**0.01**	**0.0055**	**0.025**	**0.01**
MW-15	31-Oct-95						0.012				0.064					
MW-15	19-Dec-95															
MW-15	26-Feb-96						0.036	0.012							**0.143**	
MW-15	29-Apr-96				**0.005**		**0.196**	0.052	0.503	**0.034**	0.094				**0.410**	0.240
MW-15	27-Nov-96			0.15			0.003	0.007	0.017						**0.051**	0.046
MW-15 (dup)	27-Nov-96			0.2			0.004	0.007	0.021						**0.072**	0.046
MW-15	24-Apr-97															0.078
MW-15 (dup)	24-Apr-97															
MW-15	31-Oct-97															0.078
MW-15	7-May-98													**0.012**		
MW-15	23-Nov-98					**0.0025**	0.01								**0.040**	0.12
MW-15	14-Apr-99					0.0011										0.0159
MW-15	1-Dec-99															
MW-15	6-Apr-00					0.0015										
MW-15	18-Dec-00					0.0014		0.0102							**0.0941**	0.475
MW-15	17-Apr-01															
MW-15 (dup)	17-Apr-01															
MW-15	28-Nov-01					0.0011									**0.0669**	0.165
MW-15	3-Apr-02															
MW-15	6-Nov-02															
MW-15	15-Apr-03					**0.0019**	0.0195	0.0169							**0.0617**	
MW-15	29-Oct-03															
MW-15	8-Apr-04															
MW-15	18-Nov-04						**0.06**	0.025			0.052				**0.142**	0.09
MW-15	21-Apr-05															
MW-15	11-Nov-05															
MW-15	13-Apr-06															
MW-15	8-Nov-06						0.011									0.061
MW-15	20-Apr-07															
MW-15	7-Nov-07								0.015						**0.027**	0.077
MW-15	13-May-08			0.0896J			0.0121	0.00526J	0.0197	0.00515J		0.0139			**0.0191J**	0.0134
MW-15D	31-Oct-95															
MW-15D	19-Dec-95															
MW-15D	26-Feb-96															
MW-15D	29-Apr-96															
MW-15D	27-Nov-96			0.05			0.003								**0.005**	
MW-15D	24-Apr-97															0.05
MW-15D	31-Oct-97									0.013						0.05
MW-15D	7-May-98						0.013							**0.011**		
MW-15D	23-Nov-98															
MW-15D	14-Apr-99															
MW-15D	1-Dec-99															
MW-15D	6-Apr-00															
MW-15D	18-Dec-00															
MW-15D	17-Apr-01															
MW-15D	28-Nov-01															
MW-15D	3-Apr-02															
MW-15D	6-Nov-02															
MW-15D	15-Apr-03															
MW-15D	29-Oct-03															
MW-15D	8-Apr-04															
MW-15D	18-Nov-04															
MW-15D	21-Apr-05															
MW-15D	11-Nov-05															
MW-15D	13-Apr-06															
MW-15D	8-Nov-06															
MW-15D	20-Apr-07															
MW-15D	7-Nov-07															
MW-15D	13-May-08			0.0601J			0.00506J		0.00522J	0.00788J						0.00536J
MW-16	31-Oct-95						**0.590**				0.073					
MW-16	19-Dec-95						**0.204**									
MW-16	26-Feb-96						**0.086**									
MW-16 (dup)	26-Feb-96						0.020									
MW-16	29-Apr-96				0.003		0.040	0.017		**0.037**					**0.065**	0.051
MW-16	27-Nov-96			0.15				0.002								
MW-16	24-Apr-97						0.012			0.011						0.14
MW-16	31-Oct-97							0.01								0.045
MW-16 (dup)	31-Oct-97						0.012	0.013		0.012						0.031
MW-16	7-May-98						0.012							**0.015**		
MW-16	23-Nov-98					0.0015										
MW-16	14-Apr-99					0.0013										
MW-16	1-Dec-99					0.0013										
MW-16	6-Apr-00							0.0133								
MW-16	18-Dec-00															
MW-16	17-Apr-01															
MW-16	28-Nov-01		0.0133													
MW-16	3-Apr-02															
MW-16	6-Nov-02															
MW-16	15-Apr-03															
MW-16	29-Oct-03															
MW-16 (dup)	29-Oct-03															
MW-16	8-Apr-04		0.0151					0.0124								
MW-16	18-Nov-04	dry	dry	dry	dry	dry	dry	dry	dry	dry	dry	dry	dry	dry	dry	dry
MW-16	21-Apr-05															
MW-16	11-Nov-05															
MW-16	13-Apr-06															
MW-16	8-Nov-06		0.012				0.012	0.012								
MW-16	20-Apr-07			0.112					0.011							0.029
MW-16	7-Nov-07			0.167					0.012							0.023

Table 3A
Detected Groundwater Constituents - Metals
North Wake Lined Landfill

Monitor Well	Sample Date	Antimony	Arsenic	Barium	Beryllium	Cadmium	Chromium	Cobalt	Copper	Lead	Nickel	Selenium	Silver	Thallium	Vanadium	Zinc
NC2L		**0.0014***	**0.05**	**2**	**0.004***	**0.00175**	**0.05**	**0.07***	**1**	**0.015**	**0.1**	**0.05**	**0.0175**	**0.00028***	**0.0035***	**1.05**
SWSL		**0.006**	**0.010**	**0.1**	**0.001**	**0.001**	**0.01**	**0.01**	**0.01**	**0.01**	**0.05**	**0.01**	**0.01**	**0.0055**	**0.025**	**0.01**
MW-16	13-May-08			0.144		0.00027J	0.0152	0.00752J	0.0295	0.012		0.012	0.00094J		**0.0307J**	0.129
MW-17	31-Oct-95															
MW-17	19-Dec-95						0.012									
MW-17	26-Feb-96				0.003		0.036	0.011		**0.016**					**0.104**	0.052
MW-17	29-Apr-96						0.014									
MW-17	27-Nov-96			0.023			0.003									
MW-17	24-Apr-97						0.02									0.056
MW-17	31-Oct-97						0.013			0.01						0.035
MW-17	11-May-98						0.011									0.13
MW-17	23-Nov-98															
MW-17	14-Apr-99															
MW-17	1-Dec-99															
MW-17	6-Apr-00															
MW-17	18-Dec-00															
MW-17	17-Apr-01															
MW-17	29-Nov-01															
MW-17	3-Apr-02															
MW-17 (dup)	3-Apr-02															
MW-17	6-Nov-02															
MW-17	15-Apr-03															
MW-17	29-Oct-03															
MW-17	8-Apr-04															
MW-17	18-Nov-04															
MW-17	21-Apr-05															
MW-17	11-Nov-05						0.014									
MW-17	13-Apr-06															
MW-17	8-Nov-06				0.003		0.02			**0.017**					**0.042**	
MW-17	20-Apr-07															
MW-17	7-Nov-07			0.107	0.003		0.019		0.011	**0.015**					**0.041**	0.029
MW-17	13-May-08			0.0417J			0.0112		0.00808J	0.00844J			0.0015J		**0.0113J**	0.00722J
MW-17D	31-Oct-95															
MW-17D	19-Dec-95															
MW-17D	26-Feb-96															
MW-17D	29-Apr-96															
MW-17D	27-Nov-96			0.026			0.005									
MW-17D	24-Apr-97															
MW-17D	31-Oct-97															
MW-17D	11-May-98															0.058
MW-17D	23-Nov-98															
MW-17D	14-Apr-99															
MW-17D	1-Dec-99															
MW-17D	6-Apr-00															
MW-17D	18-Dec-00															
MW-17D	17-Apr-01															
MW-17D	29-Nov-01															
MW-17D	3-Apr-02															
MW-17D	6-Nov-02															0.539
MW-17D	15-Apr-03															
MW-17D	29-Oct-03															
MW-17D	8-Apr-04															
MW-17D	18-Nov-04															
MW-17D	21-Apr-05					**0.002**										
MW-17D	11-Nov-05															
MW-17D	13-Apr-06															
MW-17D	8-Nov-06															
MW-17D	20-Apr-07						0.021									
MW-17D	7-Nov-07															
MW-17D	13-May-08			0.0382J			0.00345J		0.00446J	0.00853J			0.0013J			0.0063J
MW-18	31-Oct-95			0.857	**0.004**		**0.271**	**0.092**		**0.018**	**0.264**				**0.207**	0.428
MW-18 (dup)	31-Oct-95			1.347	**0.009**		**0.505**	**0.145**		**0.027**	**0.458**				**0.307**	0.875
MW-18	19-Dec-95															
MW-18	26-Feb-96						**0.067**	0.038		0.012					**0.107**	0.150
MW-18	29-Apr-96				**0.005**		**0.299**	**0.127**	0.620	**0.023**	**0.218**				**0.165**	0.606
MW-18	27-Nov-96			0.018												
MW-18	24-Apr-97					0.001		0.045			0.066				**0.11**	0.26
MW-18	31-Oct-97						**0.064**	0.026							**0.062**	0.11
MW-18	7-May-98						0.014									
MW-18	23-Nov-98					0.0012	0.013									
MW-18	14-Apr-99					**0.0018**										
MW-18	1-Dec-99						0.0123									
MW-18	6-Apr-00															
MW-18	18-Dec-00															
MW-18	17-Apr-01															
MW-18	29-Nov-01						0.0231	0.0165								0.0676
MW-18	5-Apr-02															
MW-18	6-Nov-02						0.0146	0.0106								
MW-18	15-Apr-03					0.0010	0.0235	0.0133								
MW-18	29-Oct-03						0.0275	0.0134								
MW-18	8-Apr-04						0.0251	0.0119								
MW-18	18-Nov-04															
MW-18	21-Apr-05															
MW-18	11-Nov-05															
MW-18	13-Apr-06						0.023									0.051
MW-18	8-Nov-06			0.598	0.003		0.047	0.019		**0.017**					**0.056**	0.244
MW-18	20-Apr-07			0.106					0.026						**0.025**	0.043
MW-18	7-Nov-07			0.281	0.001		0.035	0.013	0.043						**0.044**	0.107
MW-18	13-May-08			0.0726J			0.022	0.00544J	0.0286	0.0128	0.00608J	0.0091J			**0.0178J**	0.0223

Table 3A
Detected Groundwater Constituents - Metals
North Wake Lined Landfill

Monitor Well	Sample Date	Antimony	Arsenic	Barium	Beryllium	Cadmium	Chromium	Cobalt	Copper	Lead	Nickel	Selenium	Silver	Thallium	Vanadium	Zinc
NC2L		**0.0014***	**0.05**	**2**	**0.004***	**0.00175**	**0.05**	**0.07***	**1**	**0.015**	**0.1**	**0.05**	**0.0175**	**0.00028***	**0.0035***	**1.05**
SWSL		**0.006**	**0.010**	**0.1**	**0.001**	**0.001**	**0.01**	**0.01**	**0.01**	**0.01**	**0.05**	**0.01**	**0.01**	**0.0055**	**0.025**	**0.01**
MW-19	8-Mar-99					**0.003**	**0.124**	0.0285		0.0124	0.056				**0.0826**	0.0573
MW-19	15-Apr-99															
MW-19	27-May-99															
MW-19	20-Jul-99															
MW-19	4-Aug-99															
MW-19 (dup)	4-Aug-99															
MW-19	1-Dec-99															
MW-19	5-Apr-00															
MW-19	18-Dec-00															
MW-19	18-Apr-01															
MW-19	28-Nov-01															
MW-19	4-Apr-02															
MW-19	5-Nov-02						0.0178									
MW-19	16-Apr-03						0.0294									
MW-19	30-Oct-03															
MW-19	7-Apr-04															
MW-19	18-Nov-04						0.018									
MW-19	21-Apr-05															
MW-19	11-Nov-05															
MW-19	13-Apr-06															
MW-19	8-Nov-06															
MW-19	20-Apr-07															
MW-19	7-Nov-07						0.017		0.029							0.012
MW-19	14-May-08			0.033J			0.0106		0.012							0.00437J
MW-20	15-Apr-99					0.00012	0.0118	0.036								0.098
MW-20	27-May-99															
MW-20 (dup)	27-May-99															
MW-20	20-Jul-99															
MW-20	4-Aug-99															
MW-20	1-Dec-99															
MW-20	5-Apr-00															
MW-20	18-Dec-00															
MW-20	18-Apr-01															
MW-20	27-Nov-01			0.179				0.0279	0.122							0.0827
MW-20	4-Apr-02							0.011								
MW-20	6-Nov-02															
MW-20	16-Apr-03					0.0013	0.0101	0.0191								0.0601
MW-20	30-Oct-03															
MW-20	7-Apr-04															
MW-20	18-Nov-04							0.01								
MW-20	21-Apr-05															
MW-20	11-Nov-05															
MW-20	13-Apr-06															
MW-20	8-Nov-06															
MW-20	20-Apr-07								0.019							0.015
MW-20	7-Nov-07			0.147				0.012	0.075	**0.019**					**0.029**	0.079
MW-20	14-May-08		0.00231J	0.0364J			0.00474J		0.0272	0.0113					**0.0107J**	0.0126
MW-21	15-Apr-99					**0.004**		0.0632	0.362	0.0147	0.0527				**0.0565**	0.347
MW-21	27-May-99															
MW-21	20-Jul-99															
MW-21	4-Aug-99															
MW-21	30-Nov-99															
MW-21	5-Apr-00															
MW-21	18-Dec-00															
MW-21	18-Apr-01															
MW-21	27-Nov-01															
MW-21	4-Apr-02															
MW-21	5-Nov-02															
MW-21	16-Apr-03															
MW-21	30-Oct-03															
MW-21	7-Apr-04															
MW-21	18-Nov-04							0.016							**0.049**	
MW-21	21-Apr-05															
MW-21	11-Nov-05															
MW-21	13-Apr-06															
MW-21	8-Nov-06															
MW-21	20-Apr-07															
MW-21	7-Nov-07															0.011
MW-21	14-May-08			0.085J			0.00425J		0.0192	0.00645J					**0.00538J**	0.0109
MW-21 (dup)	14-May-08			0.0914J			0.00476J		0.0205	0.00542J			0.00446J	**0.00692**	**0.012J**	0.0168

Table 3A
Detected Groundwater Constituents - Metals
North Wake Lined Landfill

Monitor Well	Sample Date	Antimony	Arsenic	Barium	Beryllium	Cadmium	Chromium	Cobalt	Copper	Lead	Nickel	Selenium	Silver	Thallium	Vanadium	Zinc
NC2L		**0.0014***	**0.05**	**2**	**0.004***	**0.00175**	**0.05**	**0.07***	**1**	**0.015**	**0.1**	**0.05**	**0.0175**	**0.00028***	**0.0035***	**1.05**
SWSL		**0.006**	**0.010**	**0.1**	**0.001**	**0.001**	**0.01**	**0.01**	**0.01**	**0.01**	**0.05**	**0.01**	**0.01**	**0.0055**	**0.025**	**0.01**
MW-25	15-Apr-99															
MW-25	27-May-99															
MW-25	20-Jul-99															
MW-25 (dup)	20-Jul-99															
MW-25	4-Aug-99															
MW-25	1-Dec-99															
MW-25	5-Apr-00															
MW-25	18-Dec-00					0.0011										
MW-25	18-Apr-01															
MW-25	27-Nov-01															
MW-25	4-Apr-02															
MW-25	5-Nov-02															
MW-25	16-Apr-03															
MW-25	30-Oct-03															
MW-25	7-Apr-04															
MW-25	18-Nov-04															
MW-25	21-Apr-05															
MW-25	11-Nov-05															
MW-25	13-Apr-06															
MW-25	8-Nov-06															
MW-25	20-Apr-07															0.01
MW-25	7-Nov-07			0.126			0.015									0.028
MW-25	14-May-08			0.0528J			0.00441J		0.00472J	0.00397J						
MW-25D	15-Apr-99															
MW-25D	27-May-99															
MW-25D	20-Jul-99															
MW-25D	4-Aug-99															
MW-25D	1-Dec-99															
MW-25D	5-Apr-00															
MW-25D	18-Dec-00															
MW-25D	18-Apr-01					**0.0039**										
MW-25D	27-Nov-01								0.0109							
MW-25D	4-Apr-02															
MW-25D	5-Nov-02															
MW-25D	16-Apr-03					**0.0033**	0.0172	0.0212								
MW-25D	30-Oct-03															
MW-25D	7-Apr-04															
MW-25D	18-Nov-04															
MW-25D	21-Apr-05															
MW-25D	11-Nov-05															
MW-25D	13-Apr-06															
MW-25D	8-Nov-06						0.01									
MW-25D	20-Apr-07															
MW-25D	7-Nov-07						0.01		0.029							0.029
MW-25D	14-May-08			0.0766J			0.0121	0.00418J	0.0356		0.00844J				**0.013J**	0.0204
MW-26	27-May-99					0.0014		0.0306								
MW-26	20-Jul-99							0.0102								
MW-26	4-Aug-99							0.01								
MW-26 (dup)	4-Aug-99							0.0102								
MW-26	30-Nov-99															
MW-26 (dup)	30-Nov-99															
MW-26	5-Apr-00					0.0017		0.0146								
MW-26	15-Dec-00					**0.0018**		0.02								
MW-26	18-Apr-01							0.0109								
MW-26	27-Nov-01							0.0126								
MW-26	4-Apr-02							0.0111								
MW-26	5-Nov-02					0.0016		0.0152								
MW-26 (dup)	5-Nov-02					**0.0018**		0.0154								
MW-26	16-Apr-03					0.0012		0.0165								
MW-26	30-Oct-03					0.0011		0.0278							**0.0405**	
MW-26	7-Apr-04							0.0117								
MW-26	18-Nov-04						0.011	0.023								
MW-26	21-Apr-05															
MW-26	11-Nov-05															
MW-26	13-Apr-06															
MW-26	8-Nov-06															
MW-26	20-Apr-07			0.387	0.001	**0.002**	0.016	0.026	0.356						**0.059**	0.165
MW-26	7-Nov-07								0.012							
MW-26	14-May-08			0.0633J			0.0102	0.0129	0.0573	0.0137	0.0118J	0.0203			**0.0155J**	0.0141

Notes: DUP - Duplicate samples results; D - Deep well

All units are in milligrams per liter (parts per million).

- Indicates results below detection limits

- Concentrations exceeds N.C. Groundwater Standards (2L) or Groundwater Protection Standard

* - Groundwater Protection Standarc

J - Indicates the analytical result is an estimated concentration between the Method Detection Limit and the Solid Waste Section Reporting Limit

SWSL - Solid Waste Section Limit

Table 3B
Detected Groundwater Constituents - VOCs
North Wake Lined Landfill

Monitor Well	Sample Date	Acetone	2-Butanone (MEK)	Carbon Disulfide	Chloroform	Chloromethane	4,4'-DDT	Cis-1,2-Dichloroethene	1, 1-Dichloroethane	Endosulfan I	Methylene Chloride	Tetrachloroethene	Toluene	Trichlorofluoromethane
NC2L		**700**	**4200**	**700**	**70**	**2.6**	**0.1**	**70**	**70**	**NE**	**4.6**	**0.7**	**1000**	**2100**
SWSL		**100**	**100**	**100**	**5**	**1**	**0**	**5**	**5**	**NE**	**1**	**1**	**1**	**1**
MW-11	7-Nov-07					0.4J								
MW-11	15-May-08													
MW-11D	7-Nov-07				0.3J	0.2J								
MW-11D	15-May-08				0.31J		0.0297J			0.0096J				
MW-12	7-Nov-07	2.5J	2.9J			0.3J								
MW-12	14-May-08													
MW-12D	7-Nov-07													
MW-12D	14-May-08				0.12J									
MW-13	7-Nov-07		1.6J		0.2J									
MW-13	13-May-08				0.24J									
MW-14	7-Nov-07		1.4J		0.2J							0.2J		
MW-14	13-May-08				0.25J				0.09J			0.13J		
MW-15	7-Nov-07		1.8J			0.3J								
MW-15	13-May-08													
MW-15D	7-Nov-07		2.4J			0.3J								
MW-15D	13-May-08			0.11J										
MW-16	7-Nov-07		1.3J											
MW-16	13-May-08	4.91J											0.22J	
MW-17	7-Nov-07		4.8J			0.4J								
MW-17	13-May-08													
MW-17D	7-Nov-07					1.5J								
MW-17D	13-May-08													
MW-18	7-Nov-07		1.8J		0.2J									
MW-18	13-May-08				0.21J									
MW-19	7-Nov-07		2.2J			0.3J								
MW-19	14-May-08				0.16J							0.12J		
MW-20	7-Nov-07	1.7J	1.7J						0.4J		0.2J	0.5J		0.2J
MW-20	14-May-08				0.17J			0.11J	0.45J			0.58J		
MW-21	7-Nov-07	1.5J	1.4J											
MW-21	14-May-08				0.14J									
MW-21 (dup)	14-May-08													
MW-25	7-Nov-07	1.6J	1.4J											
MW-25	14-May-08													
MW-25D	7-Nov-07	2.1J	2.2J			0.2J								
MW-25D	14-May-08				0.16J									
MW-26	7-Nov-07	4.9J	3.6J			0.3J								
MW-26	14-May-08													

Notes: DUP - Duplicate samples results; D - Deep well

All units are in micrograms per liter (parts per billion).

- Indicates results below detection limits

- Concentrations exceeds N.C. Groundwater Standards (2L) or Groundwater Protection Standard

* - Groundwater Protection Standard

NE - Not Established

J - Indicates the analytical result is an estimated concentration between the Method Detection Limit and the Solid Waste Section Reporting Limit

SWSL - Solid Waste Section Limit

Table 3C
Detected Surface Water Constituents - Metals
North Wake Lined Landfill

Monitor Well	Sample Date	Antimony	Arsenic	Barium	Beryllium	Cadmium	Chromium	Cobalt	Copper	Lead	Nickel	Selenium	Silver	Thallium	Vanadium	Zinc
NC2B		**NS**	**0.05**	**NS**	**0.0065**	**0.002**	**0.05**	**NS**	**0.007***	**0.025**	**0.088**	**0.005**	**0.00006**	**NS**	**NS**	**0.05***
SWSL		**0.006**	**0.010**	**0.1**	**0.001**	**0.001**	**0.01**	**0.01**	**0.01**	**0.01**	**0.05**	**0.01**	**0.01**	**0.0055**	**0.025**	**0.01**
SW-2	31-Oct-95					**0.002**										
SW-2	28-Nov-96			0.025				0.002								0.021
SW-2	21-Apr-97															
SW-2	11-Nov-97															
SW-2	11-May-98															
SW-2	23-Nov-98															
SW-2	14-Apr-99															
SW-2	9-Apr-02															
SW-2	16-Apr-03															
SW-2	29-Oct-03															
SW-2	8-Apr-04															
SW-3	31-Oct-95															
SW-3	27-Nov-96			0.033												0.032
SW-3	21-Apr-97															
SW-3	1-Nov-97															**0.056**
SW-3	11-May-98															
SW-3	23-Nov-98															
SW-3	14-Apr-99															
SW-3	30-Nov-99															
SW-3	6-Apr-00															
SW-3	15-Dec-00															
SW-3	17-Apr-01															
SW-3	29-Nov-01															
SW-3	3-Apr-02															
SW-3	6-Nov-02															
SW-3	15-Apr-03															
SW-3	29-Oct-03						0.0111									
SW-3	8-Apr-04															
SW-4	31-Oct-95						0.013	0.012		0.018						
SW-4	28-Dec-96			0.013				0.002								
SW-4	21-Apr-97															
SW-4	3-Nov-97															
SW-4	11-May-98															
SW-4	23-Nov-98	NS	NS	NS	NS	NS	NS	NS	NS	NS	NS	NS	NS	NS	NS	NS
SW-4	14-Apr-99															
SW-4	30-Nov-99															
SW-4	5-Apr-00															
SW-4	15-Dec-00															
SW-4	17-Apr-01															
SW-4	29-Nov-01															
SW-4	3-Apr-02															
SW-4	6-Nov-02															
SW-4	15-Apr-03															
SW-4	30-Oct-03															
SW-4	7-Apr-04															
SW-4	18-Nov-04					0.001	0.011	0.015								
SW-4	21-Apr-05															
SW-4	11-Nov-05					0.001										
SW-4	13-Apr-06															
SW-4	8-Nov-06															
SW-4	20-Apr-07															0.025
SW-4	7-Nov-07															
SW-4	14-May-08			0.0218J			0.00328J		0.00481J	0.00551J						0.00512J

Table 3C
Detected Surface Water Constituents - Metals
North Wake Lined Landfill

Monitor Well	Sample Date	Antimony	Arsenic	Barium	Beryllium	Cadmium	Chromium	Cobalt	Copper	Lead	Nickel	Selenium	Silver	Thallium	Vanadium	Zinc
NC2B		**NS**	**0.05**	**NS**	**0.0065**	**0.002**	**0.05**	**NS**	**0.007***	**0.025**	**0.088**	**0.005**	**0.00006**	**NS**	**NS**	**0.05***
SWSL		**0.006**	**0.010**	**0.1**	**0.001**	**0.001**	**0.01**	**0.01**	**0.01**	**0.01**	**0.05**	**0.01**	**0.01**	**0.0055**	**0.025**	**0.01**
SW-5	31-Oct-95						0.012									
SW-5	27-Nov-96			0.044				0.002								0.012
SW-5	21-Apr-97															
SW-5	1-Nov-97															0.042
SW-5	11-May-98															
SW-5	23-Nov-98															
SW-5	14-Apr-99															
SW-5	30-Nov-99															
SW-5	6-Apr-00															
SW-5	15-Dec-00															
SW-5	17-Apr-01															
SW-5	29-Nov-01															
SW-5	3-Apr-02					0.001										
SW-5	6-Nov-02					0.001										
SW-5	15-Apr-03					0.001										
SW-5	29-Oct-03					0.001										
SW-5	8-Apr-04															
SW-5	18-Nov-04															
SW-5	21-Apr-05	dry	dry	dry	dry	dry	dry	dry	dry	dry	dry	dry	dry	dry	dry	dry
SW-5	11-Nov-05	dry	dry	dry	dry	dry	dry	dry	dry	dry	dry	dry	dry	dry	dry	dry
SW-5	13-Apr-06	dry	dry	dry	dry	dry	dry	dry	dry	dry	dry	dry	dry	dry	dry	dry
SW-5	8-Nov-06															
SW-5	20-Apr-07	dry	dry	dry	dry	dry	dry	dry	dry	dry	dry	dry	dry	dry	dry	dry
SW-5	7-Nov-07	dry	dry	dry	dry	dry	dry	dry	dry	dry	dry	dry	dry	dry	dry	dry
SW-5	13-May-08		0.00279J	0.203		0.00021J	0.0452	0.0127	**0.0487**	**0.0382**	0.0137J	**0.0237**			0.116	0.0803
SW-6	30-Nov-99															
SW-6	5-Apr-00															
SW-6	15-Dec-00															
SW-6	18-Apr-01															
SW-6	29-Nov-01															
SW-6	4-Apr-02															
SW-6	5-Nov-02															
SW-6	16-Apr-03															
SW-6	30-Oct-03															
SW-6	7-Apr-04													0.011		
SW-6	18-Nov-04															
SW-6	21-Apr-05															
SW-6	11-Nov-05															
SW-6	13-Apr-06															
SW-6	8-Nov-06															
SW-6	20-Apr-07															
SW-6	7-Nov-07															
SW-6	14-May-08			0.0488J			0.00441J		**0.00721J**	0.00671J						0.00576J

Notes: DUP - Duplicate samples results; D - Deep well

All units are in milligrams per liter (parts per million).

- Indicates results below detection limits

- Concentrations exceeds N.C. Surface Water Standards for Class C Waters

* - Action level

J - Indicates the analytical result is an estimated concentration between the Method Detection Limit and the Solid Waste Section Reporting Limit

SWSL - Solid Waste Section Limit

Table 3D
Detected Surface Water Constituents - VOCs
North Wake Lined Landfill

Monitor Well	Sample Date	Acetone	Bromodichloromethane	Bromoform	2-Butanone (MEK)	Carbon Disulfide	Chloroform	Chloromethane	Dibromochloromethane	Cis-1,2-Dichloroethene	1, 1-Dichloroethane	Methylene Chloride	Tetrachloroethene	Toluene	Trichlorofluoromethane
NC2B		**NS**	**NS**	**NS**	**NS**	**NS**	**NS**	**NS**	**NS**	**NS**	**NS**	**NS**	**10.8**	**11**	**NS**
SWSL		**100**	**1**	**3**	**100**	**100**	**5**	**1**	**1**	**5**	**5**	**1**	**1**	**1**	**1**
SW-4	7-Nov-07				1.3J										
SW-4	14-May-08														
SW-5	7-Nov-07														
SW-5	13-May-08	7.75J													
SW-6	7-Nov-07	2.7J			3.1J			0.3J							
SW-6	14-May-08	3.36J	0.27J	0.38J					0.31J					0.12J	

Notes: DUP - Duplicate samples results; D - Deep well

All units are in milligrams per liter (parts per million).

- Indicates results below detection limits

- Concentrations exceeds N.C. Surface Water Standards for Class C Waters

* - Action level

J - Indicates the analytical result is an estimated concentration between the Method Detection Limit and the Solid Waste Section Reporting Limit

SWSL - Solid Waste Section Limit