McGill
ASSOCIATES

January 14, 1999

Fac/Perm/Co ID #	Date	Doc ID#
5703	7/12/2011	DIN 14578

Mr. Tim Jewett
North Carolina Department of Environment,
and Natural Resources
Division of Solid Waste Management
585 Waughtown Street
Winston Salem, North Carolina 27107

RE: Well Abandonment Records and
Ground Water Monitoring Well
Installation Logs
Macon County MSW Landfill, Phase
2 Cell 1
Macon County, North Carolina

Dear Mr. Jewett,

Please find the enclosed two (2) copies of the well abandonment records for the work completed by D.R. Phillips Contracting Company, Inc. These are records for the abandonment of 20 piezometers, 7 ground water monitoring wells, 7 soil borings, and 2 private water wells in conjunction with the new landfill construction. A private water well which was included in the design report as the McCall residence well has not been located. This well use to serve the residence that is now used for county offices. The town of Franklin water system serves the office.

In addition I have also enclosed two (2) copies each of the of the new ground water monitoring well installation records and a location map for the wells installed by Terra Consultants for the new landfill construction.

Please give me a call at ~~(704)~~ 828 252-0575 if you have any questions or comments.

Sincerely,

McGILL ASSOCIATES, P.A.

Jeffrey R. Bishop

JEFFREY R. BISHOP, P.E.

Enclosures

cc: Larry Lackey
orsillo\96117.00\tj14jan9

McGill Associates, P.A. • P.O. Box 2259, Asheville, NC 28802 • 55 Broad Street, Asheville, NC 28801
828-252-0575 • FAX 828-252-2518

Terra Consultants, Inc. | **WELL INSTALLATION RECORD** | **WELL NO. MW-17**

DRILLING CONTRACTOR: Wingo Enterprises, Inc.
DRILLER NAME: John Wingo
DRILLER REGISTRATION NO.: 1581

PROJECT: Macon Co. MSW Landfill
Phase 2 (New landfill cell)
STATE WELL CONSTRUCTION PERMIT NO.: n/a

1. **WELL LOCATION**
Nearest Town: Franklin County: Macon State: North Carolina
Site Description: Macon County Municipal Solid Waste Landfill (see site map)
(Road, Community, Site Name or Subdivision w/ Lot No. - provide sketch)

2. **OWNER** Macon County
ADDRESS 5 West Main Street
Franklin (City or Town) North Carolina (State) 28734 (Zip)

3. **DATE DRILLED** 5/28/98 **WELL USE** monitoring
4. **TOTAL DEPTH** 85 Ft.
5. **CUTTINGS COLLECTED?** YES [X] NO [ ]
6. **DOES WELL REPLACE EXISTING WELL?** YES [ ] NO [X]
7. **STATIC WATER LEVEL** Below Top of Casing: 82 FT
(use "+" if Above Top of Casing)
8. **TOP OF CASING** Above Land Surface: 2.5 FT
9. **YIELD** (gpm): n/a **METHOD OF TEST:**
10. **WATER ZONES** (depth): n/a
11. **CLORINATION:** Type n/a Amount

DRILLING LOG

Depth From	Depth To	Description
0		Red, micaceous sandy
	17	SILT
17		Dark brown w/ gray
		& black micaceous
	46	silty Fine SAND
46		Light reddish brown
	85	w/ gray sandy Silt

Note: Logged from cuttings

DESCRIPTION OF WELL CONSTRUCTION

12. **CASING:**

	Depth From	To		Diam	Wall Thickness	Mat'l
From	0	To 66	Ft.	2"	Sc40	PVC
From		To	Ft.			
From		To	Ft.			

13. **GROUT:**

	Depth From	To		Material	Method
From	0	To 62	Ft.	Portland	Tremmie
From	62	To 64	Ft.	Bentonite	Dry pack

14. **SCREEN:**

	Depth From	To		Diam	Slot Size	Mat'l
From	66	To 81	Ft.	2" in.	.01 in.	PVC
From		To	Ft.	in.	in.	

15. **SAND / GRAVEL PACK:**

	Depth From	To		Size	Material
From	64	To 85	Ft.	#1	Sand
From		To	Ft.		

16. **REMARKS:** well development by hand bailing
pH - 6.6, Temp - 60.3F, Cond - 0.132 mS/cm
color - clear, odor - n/a

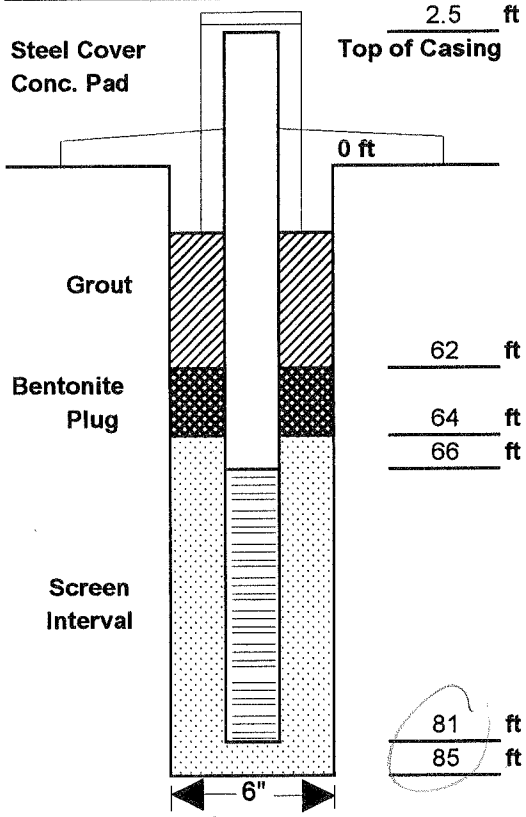

I DO HEREBY CERTIFY THAT THIS WELL WAS CONSTRUCTED IN ACCORDANCE WITH 15A NCAC 2C, WELL CONSTRUCTION STANDARDS, AND THAT A COPY OF THIS RECORD HAS BEEN PROVIDED TO THE WELL OWNER.

Signature of Contractor or Agent — Date 6/8/98

Terra Consultants, Inc. | **WELL INSTALLATION RECORD** | **WELL NO. MW-18**

DRILLING CONTRACTOR: Wingo Enterprises, Inc.
DRILLER NAME: John Wingo
DRILLER REGISTRATION NO.: 1581

PROJECT: Macon Co. MSW Landfill
Phase 2 (New landfill cell)
STATE WELL CONSTRUCTION PERMIT NO.: n/a

1. **WELL LOCATION**
   Nearest Town: Franklin County: Macon State: North Carolina
   Site Description: Macon County Municipal Solid Waste Landfill (see site map)
   (Road, Community, Site Name or Subdivision w/ Lot No. - provide sketch)
2. **OWNER** Macon County
   ADDRESS 5 West Main Street
   Franklin (City or Town) North Carolina (State) 28734 (Zip)
3. **DATE DRILLED** 5/29/98 **WELL USE** monitoring
4. **TOTAL DEPTH** 64 Ft.
5. **CUTTINGS COLLECTED?** YES [X] NO [ ]
6. **DOES WELL REPLACE EXISTING WELL?** YES [ ] NO [X]
7. **STATIC WATER LEVEL** Below Top of Casing: 61 FT
   (use "+" if Above Top of Casing)
8. **TOP OF CASING** Above Land Surface: 2.5 FT
9. **YIELD** (gpm): n/a **METHOD OF TEST:**
10. **WATER ZONES** (depth): n/a
11. **CLORINATION:** Type n/a Amount

DRILLING LOG

Depth From	Depth To	Description
0		Red, micaceous sandy
	13	SILT
13		Dark brown w/ gray
		& black micaceous
	40	silty Fine SAND
40		Light reddish brown
	64	w/ gray sandy Silt

Note: Logged from cuttings

DESCRIPTION OF WELL CONSTRUCTION

12. **CASING:**

	Depth			Diam	Wall Thickness	Mat'l
From 0	To 48	Ft.		2"	Sc40	PVC
From	To	Ft.				
From	To	Ft.				

13. **GROUT:**

	Depth			Material	Method
From 0	To 44	Ft.		Portland	Tremmie
From 44	To 46	Ft.		Bentonite	dry pack

14. **SCREEN:**

	Depth			Diam	Slot Size	Mat'l
From 48	To 63	Ft.		2" in.	.01 in.	PVC
From	To	Ft.		in.	in.	

15. **SAND / GRAVEL PACK:**

	Depth			Size	Material
From 46	To 64	Ft.		#1	Sand
From	To	Ft.			

16. **REMARKS:** well development by hand bailing
pH - 6.7, Temp - 63.8F, Cond - 0.065 mS/cm
color - cloudy, odor - n/a

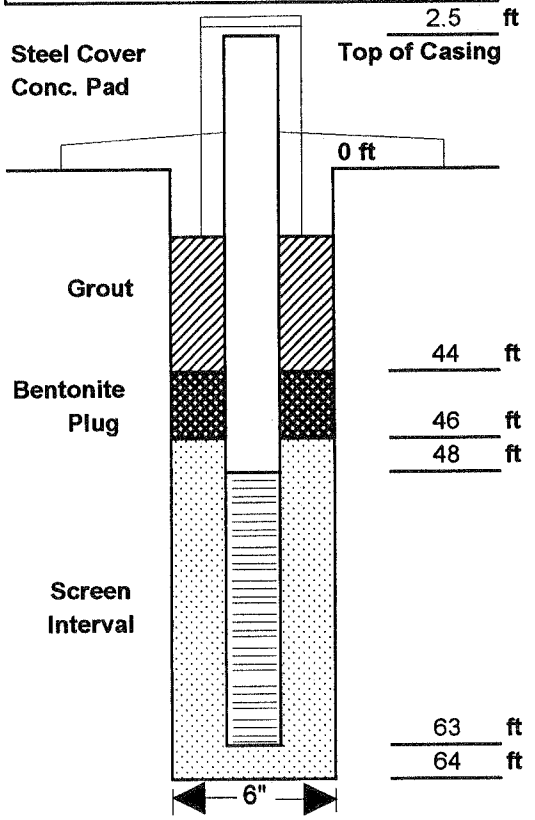

I DO HEREBY CERTIFY THAT THIS WELL WAS CONSTRUCTED IN ACCORDANCE WITH 15A NCAC 2C, WELL CONSTRUCTION STANDARDS, AND THAT A COPY OF THIS RECORD HAS BEEN PROVIDED TO THE WELL OWNER.

Signature of Contractor or Agent

6/8/98
Date

Terra Consultants, Inc. | **WELL INSTALLATION RECORD** | **WELL NO.** MW-19

DRILLING CONTRACTOR: Wingo Enterprises, Inc.
DRILLER NAME: John Wingo
DRILLER REGISTRATION NO.: 1581

PROJECT: Macon Co. MSW Landfill
Phase 2 (New landfill cell)
STATE WELL CONSTRUCTION PERMIT NO.: n/a

1. **WELL LOCATION**
Nearest Town: Franklin County: Macon State: North Carolina
Site Description: Macon County Municipal Solid Waste Landfill (see site map)
(Road, Community, Site Name or Subdivision w/ Lot No. - provide sketch)

2. **OWNER** Macon County
ADDRESS 5 West Main Street
Franklin (City or Town) North Carolina (State) 28734 (Zip)

3. **DATE DRILLED** 5/27/98 **WELL USE** monitoring
4. **TOTAL DEPTH** 23 Ft.
5. **CUTTINGS COLLECTED?** YES [X] NO [ ]
6. **DOES WELL REPLACE EXISTING WELL?** YES [ ] NO [X]
7. **STATIC WATER LEVEL** Below Top of Casing: 21 FT
(use "+" if Above Top of Casing)
8. **TOP OF CASING** Above Land Surface: 2.5 FT
9. **YIELD** (gpm): n/a **METHOD OF TEST:**
10. **WATER ZONES** (depth): n/a
11. **CLORINATION:** Type n/a Amount

DRILLING LOG

Depth From	Depth To	Description
0		
		Red, micaceous sandy
	19	SILT
19		Dark brown w/ gray
		& black micaceous
	23	silty Fine SAND (sappr)

Note: Logged from cuttings

DESCRIPTION OF WELL CONSTRUCTION

12. **CASING:**

	Depth			Diam	Wall Thickness	Mat'l
From 0	To 7	Ft.		2"	Sc40	PVC
From	To	Ft.				
From	To	Ft.				

13. **GROUT:**

	Depth			Material	Method
From 0	To 4	Ft.		Portland	Tremmie
From 4	To 6	Ft.		Bentonite	dry pack

14. **SCREEN:**

	Depth			Diam	Slot Size	Mat'l
From 7	To 22	Ft.		2" in.	.01 in.	PVC
From	To	Ft.		in.	in.	

15. **SAND / GRAVEL PACK:**

	Depth			Size	Material
From 6	To 23	Ft.		#1	Sand
From	To	Ft.			

16. **REMARKS:** well development by hand bailing
pH - 6.8, Temp - 64.0F, Cond - 0.114 mS/cm
color - sl. cloudy, odor - n/a

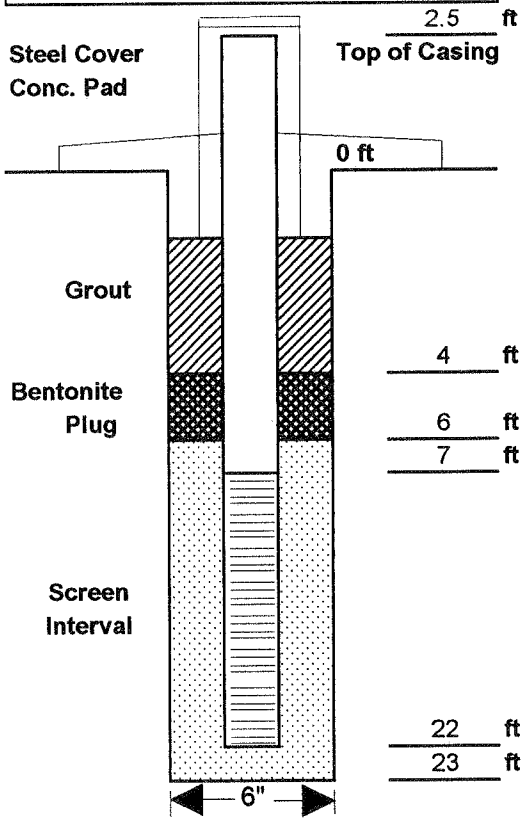

I DO HEREBY CERTIFY THAT THIS WELL WAS CONSTRUCTED IN ACCORDANCE WITH 15A NCAC 2C, WELL CONSTRUCTION STANDARDS, AND THAT A COPY OF THIS RECORD HAS BEEN PROVIDED TO THE WELL OWNER.

Signature of Contractor or Agent — Date 6/6/98

Terra Consultants, Inc. | **WELL INSTALLATION RECORD** | **WELL NO. MW-19A**

DRILLING CONTRACTOR: Wingo Enterprises, Inc.
DRILLER NAME: John Wingo
DRILLER REGISTRATION NO.: 1581

PROJECT: Macon Co. MSW Landfill
Phase 2 (New landfill cell)
STATE WELL CONSTRUCTION PERMIT NO.: n/a

1. **WELL LOCATION**
Nearest Town: Franklin County: Macon State: North Carolina
Site Description: Macon County Municipal Solid Waste Landfill (see site map)
(Road, Community, Site Name or Subdivision w/ Lot No. - provide sketch)

2. **OWNER** Macon County
ADDRESS 5 West Main Street
Franklin (City or Town) North Carolina (State) 28734 (Zip)

3. **DATE DRILLED** 5/27/98 **WELL USE** monitoring
4. **TOTAL DEPTH** 55 Ft.
5. **CUTTINGS COLLECTED?** YES [X] NO [ ]
6. **DOES WELL REPLACE EXISTING WELL?** YES [ ] NO [X]
7. **STATIC WATER LEVEL** Below Top of Casing: 52 FT
(use "+" if Above Top of Casing)
8. **TOP OF CASING** Above Land Surface: 2.5 FT
9. **YIELD** (gpm): n/a **METHOD OF TEST:**
10. **WATER ZONES** (depth): n/a
11. **CLORINATION:** Type n/a Amount

DRILLING LOG

Depth From	Depth To	Description
0		Red, micaceous sandy
	18	SILT
18		Dark brown w/ gray
		& black micaceous
	36	silty Fine SAND
36		Light reddish brown
	55	w/ gray sandy Silt

Note: Logged from cuttings

DESCRIPTION OF WELL CONSTRUCTION

12. **CASING:**

	Depth From	To		Diam	Wall Thickness	Mat'l
From	0	To 51.5	Ft.	2"	Sc40	PVC
From		To	Ft.			
From		To	Ft.			

13. **GROUT:**

	Depth From	To		Material	Method
From	0	To 47.5	Ft.	Portland	Tremmie
From	47.5	To 49.5	Ft.	Bentonite	dry pack

14. **SCREEN:**

	Depth From	To		Diam	Slot Size	Mat'l
From	51.5	To 54	Ft.	2" in.	.01 in.	PVC
From		To	Ft.	in.	in.	

2.5' Screen

15. **SAND / GRAVEL PACK:**

	Depth From	To		Size	Material
From	49.5	To 55	Ft.	#1	Sand
From		To	Ft.		

5.5'

16. **REMARKS:** well development by hand bailing
pH - 6.45, Temp - 62.1F, Cond - 0.074 mS/cm
color - clear, odor - n/a

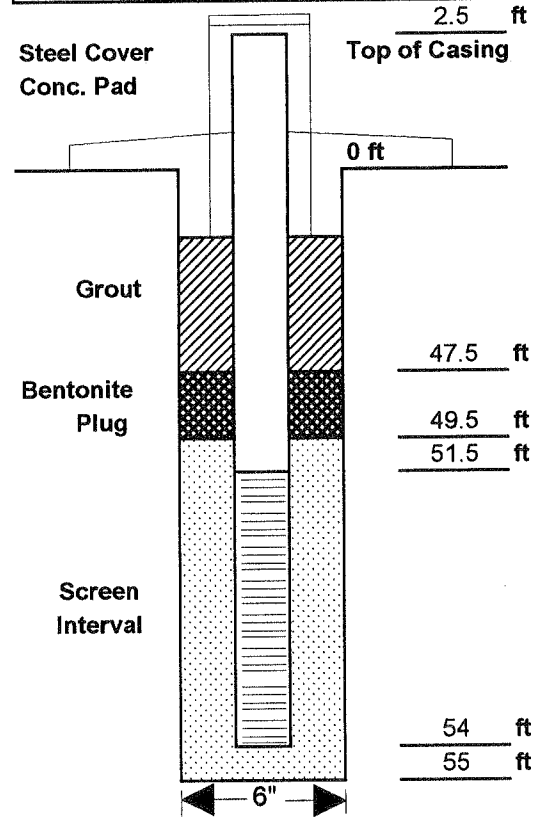

I DO HEREBY CERTIFY THAT THIS WELL WAS CONSTRUCTED IN ACCORDANCE WITH 15A NCAC 2C, WELL CONSTRUCTION STANDARDS, AND THAT A COPY OF THIS RECORD HAS BEEN PROVIDED TO THE WELL OWNER.

Signature of Contractor or Agent

6/8/98
Date

Terra Consultants, Inc. | **WELL INSTALLATION RECORD** | **WELL NO. MW-20**

DRILLING CONTRACTOR: Wingo Enterprises, Inc.
DRILLER NAME: John Wingo
DRILLER REGISTRATION NO.: 1581

PROJECT: Macon Co. MSW Landfill
Phase 2 (New landfill cell)
STATE WELL CONSTRUCTION PERMIT NO.: n/a

1. **WELL LOCATION**
Nearest Town: Franklin County: Macon State: North Carolina
Site Description: Macon County Municipal Solid Waste Landfill (see site map)
(Road, Community, Site Name or Subdivision w/ Lot No. - provide sketch)

2. **OWNER** Macon County
ADDRESS 5 West Main Street
Franklin (City or Town) North Carolina (State) 28734 (Zip)

3. **DATE DRILLED** 5/28/98 **WELL USE** monitoring
4. **TOTAL DEPTH** 23 Ft.
5. **CUTTINGS COLLECTED?** YES [X] NO [ ]
6. **DOES WELL REPLACE EXISTING WELL?** YES [ ] NO [X]
7. **STATIC WATER LEVEL** Below Top of Casing: 21 FT
(use "+" if Above Top of Casing)
8. **TOP OF CASING** Above Land Surface: 2.5 FT
9. **YIELD** (gpm): n/a **METHOD OF TEST:**
10. **WATER ZONES** (depth): n/a
11. **CLORINATION:** Type n/a Amount

DRILLING LOG

Depth From	Depth To	Description
0		
		Red, micaceous sandy
	16	SILT
16		Dark brown w/ gray
		& black micaceous
	23	silty Fine SAND (sappr)

Note: Logged from cuttings

DESCRIPTION OF WELL CONSTRUCTION

12. **CASING:**

	Depth From	To		Diam	Wall Thickness	Mat'l
	0	6	Ft.	2"	Sch40	PVC
			Ft.			
			Ft.			

13. **GROUT:**

	Depth From	To		Material	Method
	0	3	Ft.	Portland	Tremmie
	3	5	Ft.	Bentonite	dry pack

14. **SCREEN:**

	Depth From	To		Diam		Slot Size		Mat'l
	6	21	Ft.	2"	in.	.01	in.	PVC
			Ft.		in.		in.	

15. **SAND / GRAVEL PACK:**

	Depth From	To		Size	Material
	5	23	Ft.	#1	Sand
			Ft.		

16. **REMARKS:** well development by hand bailing
pH -7.1, Temp - 63.8F, Cond - 0.0412 mS/cm
color - cloudy, odor - n/a

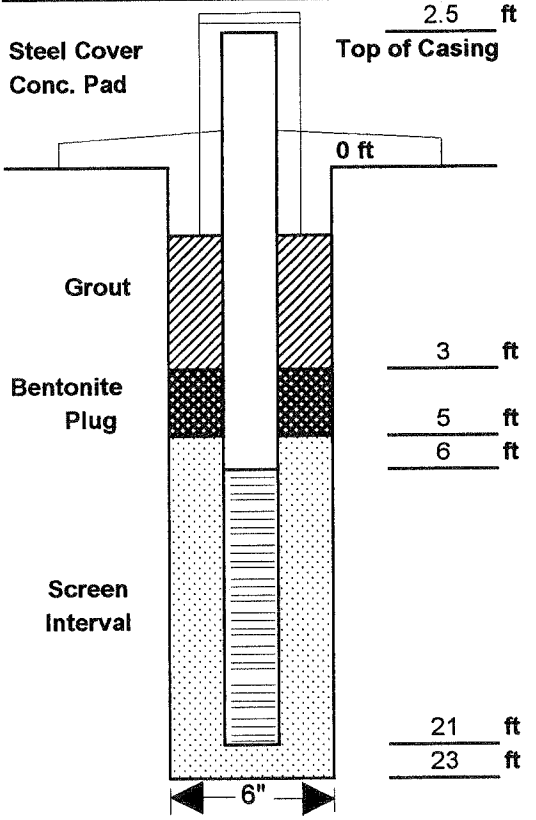

I DO HEREBY CERTIFY THAT THIS WELL WAS CONSTRUCTED IN ACCORDANCE WITH 15A NCAC 2C, WELL CONSTRUCTION STANDARDS, AND THAT A COPY OF THIS RECORD HAS BEEN PROVIDED TO THE WELL OWNER.

Signature of Contractor or Agent — Date 6/5/98

Terra Consultants, Inc. | **WELL INSTALLATION RECORD** | **WELL NO.** MW-21

DRILLING CONTRACTOR: Wingo Enterprises, Inc.
DRILLER NAME: John Wingo
DRILLER REGISTRATION NO.: 1581

PROJECT: Macon Co. MSW Landfill
Phase 2 (New landfill cell)
STATE WELL CONSTRUCTION PERMIT NO.: n/a

1. **WELL LOCATION**
Nearest Town: Franklin County: Macon State: North Carolina
Site Description: Macon County Municipal Solid Waste Landfill (see site map)
(Road, Community, Site Name or Subdivision w/ Lot No. - provide sketch)

2. **OWNER** Macon County
ADDRESS 5 West Main Street
Franklin (City or Town) North Carolina (State) 28734 (Zip)

3. **DATE DRILLED** 5/28/98 **WELL USE** monitoring
4. **TOTAL DEPTH** 24 Ft.
5. **CUTTINGS COLLECTED?** YES [X] NO [ ]
6. **DOES WELL REPLACE EXISTING WELL?** YES [ ] NO [X]
7. **STATIC WATER LEVEL** Below Top of Casing: 22 FT
(use "+" if Above Top of Casing)
8. **TOP OF CASING** Above Land Surface: 2.5 FT
9. **YIELD** (gpm): n/a **METHOD OF TEST:**
10. **WATER ZONES** (depth): n/a
11. **CLORINATION:** Type n/a Amount

DRILLING LOG

Depth From	Depth To	Description
0		
		Red, micaceous sandy
	15	SILT
15		Dark brown w/ gray
		& black micaceous
	24	silty Fine SAND (sappr)
		(augering near refusal
		@ 24 feet)

Note: Logged from cuttings

DESCRIPTION OF WELL CONSTRUCTION

12. **CASING:**

	Depth From	To		Diam	Wall Thickness	Mat'l
From	0	8.5	Ft.	2"	Sch40	PVC
From			Ft.			
From			Ft.			

13. **GROUT:**

	Depth From	To		Material	Method
From	0	5.5	Ft.	Portland	Tremmie
From	5.5	7.5	Ft.	Bentonite	dry pack

14. **SCREEN:**

	Depth From	To		Diam	Slot Size	Mat'l
From	8.5	23.5	Ft.	2" in.	.01 in.	PVC
From			Ft.	in.	in.	

15. **SAND / GRAVEL PACK:**

	Depth From	To		Size	Material
From	7.5	24	Ft.	#1	Sand
From			Ft.		

16. **REMARKS:** well development by hand bailing
pH - 8.1, Temp - 64.1F, Cond - 0.088 mS/cm
color - clear, odor - n/a

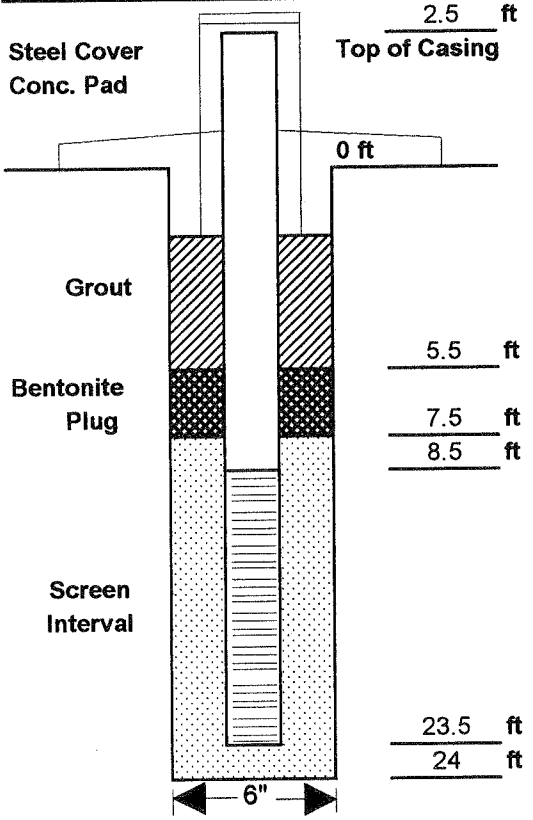

I DO HEREBY CERTIFY THAT THIS WELL WAS CONSTRUCTED IN ACCORDANCE WITH 15A NCAC 2C, WELL CONSTRUCTION STANDARDS, AND THAT A COPY OF THIS RECORD HAS BEEN PROVIDED TO THE WELL OWNER.

Signature of Contractor or Agent

6/8/98
Date

Terra Consultants, Inc. | **WELL INSTALLATION RECORD** | **WELL NO. MW-22**

DRILLING CONTRACTOR: Wingo Enterprises, Inc.
DRILLER NAME: John Wingo
DRILLER REGISTRATION NO.: 1561

PROJECT: Macon Co. MSW Landfill
Phase 2 (New landfill cell)
STATE WELL CONSTRUCTION PERMIT NO.: n/a

1. **WELL LOCATION**
Nearest Town: Franklin County: Macon State: North Carolina
Site Description: Macon County Municipal Solid Waste Landfill (see site map)
(Road, Community, Site Name or Subdivision w/ Lot No. - provide sketch)

2. **OWNER** Macon County
ADDRESS 5 West Main Street
Franklin (City or Town) North Carolina (State) 28734 (Zip)

3. **DATE DRILLED** 5/29/98 **WELL USE** monitoring
4. **TOTAL DEPTH** 25 Ft.
5. **CUTTINGS COLLECTED?** YES [X] NO [ ]
6. **DOES WELL REPLACE EXISTING WELL?** YES [ ] NO [X]
7. **STATIC WATER LEVEL** Below Top of Casing: 23 FT
(use "+" if Above Top of Casing)
8. **TOP OF CASING** Above Land Surface: 2.5 FT
9. **YIELD** (gpm): n/a **METHOD OF TEST:**
10. **WATER ZONES** (depth): n/a
11. **CLORINATION:** Type n/a Amount

DRILLING LOG

Depth From	Depth To	Description
0		
		Red, micaceous sandy
	17	SILT
17		Dark brown w/ gray
		& black micaceous
	25	silty Fine SAND (sappr)

Note: Logged from cuttings

DESCRIPTION OF WELL CONSTRUCTION

12. **CASING:**

Depth From	Depth To		Diam	Wall Thickness	Mat'l
0	8	Ft.	2"	Sc40	PVC
		Ft.			
		Ft.			

13. **GROUT:**

Depth From	Depth To		Material	Method
0	4	Ft.	Portland	Tremmie
4	6	Ft.	Bentonite	dry pack

14. **SCREEN:**

Depth From	Depth To		Diam	Slot Size	Mat'l
8	23	Ft.	2" in.	.01 in.	PVC
		Ft.	in.	in.	

15. **SAND / GRAVEL PACK:**

Depth From	Depth To		Size	Material
6	25	Ft.	#1	Sand
		Ft.		

16. **REMARKS:** well development by hand bailing
pH - 8.2, Temp - 64.1F, Cond - 0.144 mS/cm
color - clear, odor - n/a

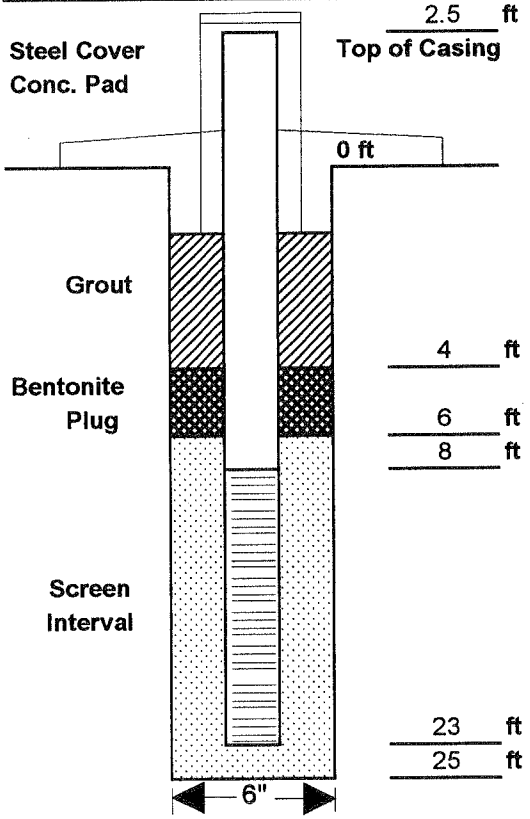

I DO HEREBY CERTIFY THAT THIS WELL WAS CONSTRUCTED IN ACCORDANCE WITH 15A NCAC 2C, WELL CONSTRUCTION STANDARDS, AND THAT A COPY OF THIS RECORD HAS BEEN PROVIDED TO THE WELL OWNER.

Signature of Contractor or Agent

6/8/98
Date

Terra Consultants, Inc. | **WELL INSTALLATION RECORD** | **WELL NO. MW-22A**

DRILLING CONTRACTOR: Wingo Enterprises, Inc.
DRILLER NAME: John Wingo
DRILLER REGISTRATION NO.: 1581

PROJECT: Macon Co. MSW Landfill
Phase 2 (New landfill cell)
STATE WELL CONSTRUCTION PERMIT NO.: n/a

1. **WELL LOCATION**
Nearest Town: Franklin County: Macon State: North Carolina
Site Description: Macon County Municipal Solid Waste Landfill (see site map)
(Road, Community, Site Name or Subdivision w/ Lot No. - provide sketch)

2. **OWNER** Macon County
ADDRESS 5 West Main Street
Franklin (City or Town) North Carolina (State) 28734 (Zip)

3. **DATE DRILLED** 5/29/98 **WELL USE** monitoring
4. **TOTAL DEPTH** 39.5 Ft.
5. **CUTTINGS COLLECTED?** YES [X] NO [ ]
6. **DOES WELL REPLACE EXISTING WELL?** YES [ ] NO [X]
7. **STATIC WATER LEVEL** Below Top of Casing: - FT
(use "+" if Above Top of Casing)
8. **TOP OF CASING** Above Land Surface: 2.5 FT
9. **YIELD** (gpm): n/a **METHOD OF TEST:**
10. **WATER ZONES** (depth): n/a
11. **CLORINATION:** Type n/a Amount

DRILLING LOG

Depth From	Depth To	Description
0		
		Red, micaceous sandy
	17	SILT
17		Dark brown w/ gray
		& black micaceous
	25	silty Fine SAND (sappr)
25		ROCK
	40	

Note: Logged from cuttings

DESCRIPTION OF WELL CONSTRUCTION

12. **CASING:**

	Depth			Diam	Wall Thickness	Mat'l
From 0	To 36.5	Ft.		2"	Sc40	PVC
From	To	Ft.				
From	To	Ft.				

13. **GROUT:**

	Depth			Material	Method
From 0	To 33	Ft.		Portland	Tremmie
From 33	To 35	Ft.		Bentonite	dry pack

14. **SCREEN:**

	Depth			Diam	Slot Size	Mat'l
From 36.5	To 39.5	Ft.		2" in.	.01 in.	PVC
From	To	Ft.		in.	in.	

3' Screen

15. **SAND / GRAVEL PACK:**

	Depth			Size	Material
From 35	To 39.5	Ft.		#1	Sand
From	To	Ft.			

4.5'

16. **REMARKS:** well development by hand bailing
pH - 8.4, Temp - 63.3F, Cond - 0.0318 mS/cm
color - clear, odor - n/a

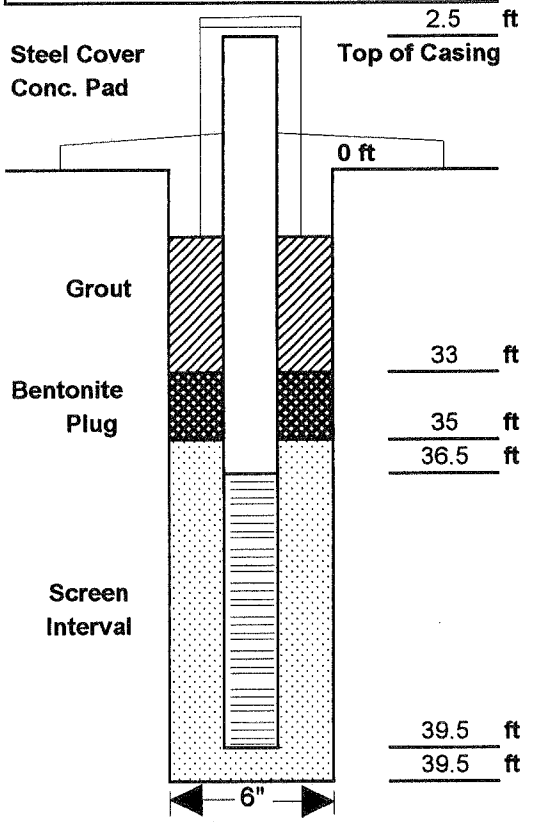

I DO HEREBY CERTIFY THAT THIS WELL WAS CONSTRUCTED IN ACCORDANCE WITH 15A NCAC 2C, WELL CONSTRUCTION STANDARDS, AND THAT A COPY OF THIS RECORD HAS BEEN PROVIDED TO THE WELL OWNER.

Signature of Contractor or Agent — Date 6/8/98

INVOICE

D.R. PHILLIPS CONTRACTING, L.P.

P.O. BOX 1689
ROBBINSVILLE, NORTH CAROLINA 28771
(704) 479-6426

No: 2320

TO: _____

DATE: 12-15-97 JOB NO. 9748 N.C.

JOB NAME Macon County Landfill

JOB LOCATION Franklin, N.C.

TERMS:

	DESCRIPTION	PRICE	AMOUNT
	Filled well PZ-1.		
	Well was 66 feet deep with		
	21 feet of water. Filled with		
	Cement.		
	(2" diameter well)		
	Sterilized with Clorox.		

INVOICE

D.R. PHILLIPS CONTRACTING, L.P.

P.O. BOX 1689
ROBBINSVILLE, NORTH CAROLINA 28771
(704) 479-6426

No: 2303

TO: _____

DATE: 12-15-97 JOB NO. 9748 N.C.

JOB NAME Macon County Landfill

JOB LOCATION Franklin, N.C.

TERMS:

	DESCRIPTION	PRICE	AMOUNT	
	Filled well PZ-2.			
	Well was 60 feet deep with			
	17 feet of water. Filled with			
	Cement.			
	(2" diameter well)			
	Steilzed with Clorox			

INVOICE

D.R. PHILLIPS CONTRACTING, L.P.

P.O. BOX 1689
ROBBINSVILLE, NORTH CAROLINA 28771
(704) 479-6426

No: 2313

TO: _____

DATE: 11-10-97 JOB NO. 9748 NC

JOB NAME Mason County Landfill

JOB LOCATION Franklin, N.C.

TERMS:

	DESCRIPTION	PRICE	AMOUNT
	Filled well PZ-5. Well was 32 feet deep with 22 feet of water. Filled with Cement. (2" diameter well) Sterilized with Clorox		

INVOICE

D.R. PHILLIPS CONTRACTING, L.P.

P.O. BOX 1689
ROBBINSVILLE, NORTH CAROLINA 28771
(704) 479-6426

No: 2304

TO: _____

DATE: 12-15-97 JOB NO. 9748 N.C.

JOB NAME Macon County Landfill

JOB LOCATION Franklin, N.C.

TERMS:

	DESCRIPTION	PRICE	AMOUNT
	Filled well PZ-6. Well was 45 feet deep with 9 feet of water. Filled with Cement. (2" diameter well) Sterilized with Clorox		

INVOICE

D.R. PHILLIPS CONTRACTING, L.P.

P.O. BOX 1689
ROBBINSVILLE, NORTH CAROLINA 28771
(704) 479-6426

No: 2309

TO: _____

DATE: 10-24-97 JOB NO. 9748 W.C.

JOB NAME Macon County Landfill

JOB LOCATION Franklin, N.C.

TERMS:

	DESCRIPTION	PRICE	AMOUNT
	Filled well # PZ-12. Well was 38 feet deep with 10 feet of water filled with cement. (2" diameter well) Sterilized with Clorox		

INVOICE

D.R. PHILLIPS CONTRACTING, L.P.

P.O. BOX 1689
ROBBINSVILLE, NORTH CAROLINA 28771
(704) 479-6426

No: 2306

TO: _____

DATE: 12-16-97 JOB NO. 9748 NC

JOB NAME Macon County Landfill

JOB LOCATION Franklin, N.C.

TERMS:

	DESCRIPTION	PRICE	AMOUNT
	Filled PZ-13.		
	Well was 54 feet deep with		
	12 feet of water. Filled with		
	Cement.		
	(2" diameter well)		
	Sterilized with Clorox		

INVOICE

D.R. PHILLIPS CONTRACTING, L.P.

P.O. BOX 1689
ROBBINSVILLE, NORTH CAROLINA 28771
(704) 479-6426

No: 2314

TO: _____

DATE: 11-11-97 JOB NO. 9748 N.C.

JOB NAME Macon County Landfill

JOB LOCATION Franklin, N.C.

TERMS:

	DESCRIPTION	PRICE	AMOUNT
	Filled well AZ-14. Well was 123 feet deep with 54 feet of water. Filled with Cement. (6" diameter well) Sterilized with Clorox		

INVOICE

D.R. PHILLIPS CONTRACTING, L.P.

P.O. BOX 1689
ROBBINSVILLE, NORTH CAROLINA 28771
(704) 479-6426

No: 2307

TO: _____

DATE: 12-18-97 JOB NO. 9748 NC

JOB NAME Macon County Landfill

JOB LOCATION Franklin, N.C.

TERMS:

	DESCRIPTION	PRICE	AMOUNT
	Filled well # PZ-15.		
	Well was 123 feet deep with		
	48 feet of Water. Filled first		
123-60=63	60 feet with Cement + then finished		
	it with packed dirt.		
	(6" diameter well)		
	Sterilized with Clorox		
	2090.26 -63 = 2027.26		

INVOICE

D.R. PHILLIPS CONTRACTING, L.P.

P.O. BOX 1689
ROBBINSVILLE, NORTH CAROLINA 28771
(704) 479-6426

No: 2315

TO: _____

DATE: 11-20-97 JOB NO. 9748 N.C.

JOB NAME Macon County Landfill

JOB LOCATION Franklin, N.C.

TERMS:

	DESCRIPTION	PRICE	AMOUNT
	Filled well PZ-16.		
	Well was 40' feet deep with	≤/b 63'	
	no water. Filled with dirt		
	(2" diameter well)		
	Sterilized with Clorox		
	2073.69 - 63 = 2010.69		

INVOICE

D.R. PHILLIPS CONTRACTING, L.P.

P.O. BOX 1689
ROBBINSVILLE, NORTH CAROLINA 28771
(704) 479-6426

No: 2318

TO: _____

DATE: 11-29-97 JOB NO. 9748 N.C.

JOB NAME Mason County Landfill

JOB LOCATION Franklin, N.C.

TERMS:

	DESCRIPTION	PRICE	AMOUNT
	Filled well MW-4.		
	Well was 65 feet deep with		
	27 feet of water. Filled with		
	Cement.		
	(2" diameter well)		
	Sterilized with Clorox		

INVOICE

D.R. PHILLIPS CONTRACTING, L.P.

P.O. BOX 1689
ROBBINSVILLE, NORTH CAROLINA 28771
(704) 479-6426

No: 2311

TO: _____

DATE: 11-5-97 JOB NO. 9748 NC

JOB NAME Macon County Landfill

JOB LOCATION Franklin, N.C. 28734

TERMS:

	DESCRIPTION	PRICE	AMOUNT
	Filled Monitoring well #6 well was 27 feet deep and had 5 feet of water. Well was filled completely with cement. (2" diameter well) Sterilized with Clorox		

INVOICE

D.R. PHILLIPS CONTRACTING, L.P.

P.O. BOX 1689
ROBBINSVILLE, NORTH CAROLINA 28771
(704) 479-6426

No: 2312

TO: _____

DATE: 11-5-97 JOB NO. 9748 N.C.

JOB NAME Mason County Landfill

JOB LOCATION Franklin, N.C.

TERMS:

	DESCRIPTION	PRICE	AMOUNT
	Filled Monitoring well # 6-A		
	Well was 22 feet deep with		
	no Water. Filled with Cement.		
	(2" diameter well)		
	Sterilized with Clorox		

INVOICE

D.R. PHILLIPS CONTRACTING, L.P.

P.O. BOX 1689
ROBBINSVILLE, NORTH CAROLINA 28771
(704) 479-6426

No: 2322

TO: _____

DATE: 12-15-97 JOB NO. 9748 N.C

JOB NAME Mason County Landfill

JOB LOCATION Franklin, N.C.

TERMS:

	DESCRIPTION	PRICE	AMOUNT
	Filled well MW-7.		
	Well was 24 feet deep with		
	8 feet of water. Filled with		
	Cement.		
	(2" diameter well)		
	Sterilized with Clorox		

INVOICE

D.R. PHILLIPS CONTRACTING, L.P.

P.O. BOX 1689
ROBBINSVILLE, NORTH CAROLINA 28771
(704) 479-6426

No: 2319

TO: _____

DATE: 12-1-97 JOB NO. 97148 N.C.

JOB NAME Macon County Landfill

JOB LOCATION Franklin, N.C.

TERMS:

	DESCRIPTION	PRICE	AMOUNT
	Filled well MW-8.		
	Well was 45 feet deep with		
	10 feet of water. Filled with		
	Cement.		
	(2" diameter well)		
	Sterilized with Clorox		

INVOICE

D.R. PHILLIPS CONTRACTING, L.P.

P.O. BOX 1689
ROBBINSVILLE, NORTH CAROLINA 28771
(704) 479-6426

No: 2321

TO:

DATE: 12-15-97 JOB NO. 9748 N.C.

JOB NAME Macon County Landfill

JOB LOCATION Franklin, N.C.

TERMS:

	DESCRIPTION	PRICE	AMOUNT
	Filled well MW-9.		
	Well was 40 feet deep with		
	4 feet of water. Filled with		
	Cement.		
	(2" diameter well)		
	Sterilized with Clorox		

INVOICE

D.R. PHILLIPS CONTRACTING, L.P.

P.O. BOX 1689
ROBBINSVILLE, NORTH CAROLINA 28771
(704) 479-6426

No: 2308

TO: _____

DATE: 11-28-97 JOB NO. 9748 NC

JOB NAME Mason County Landfill

JOB LOCATION Franklin, N.C.

TERMS:

	DESCRIPTION	PRICE	AMOUNT
	Filled well # TB22. Well was Well was 26 feet deep with no water. Filled with dirt. Sterilized with Clorox		
	2108 - 26 = 2082 ±		
Filled			
Filled			

INVOICE

D.R. PHILLIPS CONTRACTING, L.P.

P.O. BOX 1689
ROBBINSVILLE, NORTH CAROLINA 28771
(704) 479-6426

No: 2317

TO: _____

DATE: 11-28-97 JOB NO. 9748 N.C.

JOB NAME Macon County Landfill

JOB LOCATION Franklin, N.C.

TERMS:

	DESCRIPTION	PRICE	AMOUNT
	Filled well TB# 26		
	Well was 38 feet deep with		
	no water. Filled with Cement.		
	Steritzid with Clorox.		

INVOICE

D.R. PHILLIPS CONTRACTING, L.P.

P.O. BOX 1689
ROBBINSVILLE, NORTH CAROLINA 28771
(704) 479-6426

No: 2316

TO: _____

DATE: 11-27-97 JOB NO. 9748 N.C

JOB NAME Macon County Landfill

JOB LOCATION Franklin, N.C.

TERMS:

	DESCRIPTION	PRICE	AMOUNT
	Filled well TB#29.		
	Well was 22 feet deep with		
	no water. Filled with cement.		
	Sterilized with Clorox		

INVOICE

D.R. PHILLIPS CONTRACTING, L.P.

P.O. BOX 1689
ROBBINSVILLE, NORTH CAROLINA 28771
(704) 479-6426

No: 2305

TO: _____

DATE: 12-15-97 JOB NO. 9748 N.C

JOB NAME Macon County Landfill

JOB LOCATION Franklin, N.C.

TERMS:

	DESCRIPTION	PRICE	AMOUNT
	Filled well TB# 30. (over in church yard) Well was 38 feet deep with no water. Filled with Cement. Sterilized with Clorox		

North Carolina
Department of Environment, Health, & Natural Resources
Division of Environmental Management
Groundwater Section
P.O. Box 29535 - Raleigh, N.C. 27626-0535

WELL ABANDONMENT RECORD

CONTRACTOR _____ REG. NO. _____

1. WELL LOCATION: (Show a sketch of the location on back of form.)
Nearest Town: _____ County: _____

_____ _____
(Road, Community, Subdivision, Lot No.) Quadrangle No.

2. OWNER: _____

3. ADDRESS: _____

4. TOPOGRAPHY : draw, slope, hilltop, valley, flat

5. USE OF WELL: _____ DATE: _____

6. TOTAL DEPTH: _____ DIAMETER: _____

7. CASING REMOVED:

feet	diameter

8. SEALING MATERIAL:

Neat cement	Sand cement
bags of cement _____	bags of cement _____
gals. of water _____	yds. of sand _____
	gals. of water _____

Other
Type material _____

Amount _____

9. EXPLAIN METHOD EMPLACEMENT OF MATERIAL

_____

_____

_____

WELL DIAGRAM: Draw a detailed sketch of the well showing total depth, depth and diameter of screens remaining in the well, gravel interval, intervals of casing perforations, and depths and types of fill materials used.

I do hereby certify that this well abandonment record is true and exact.

Signature of Contractor or Agent _____ Date _____

WELL LOCATION: Draw a location sketch on the reverse of this sheet, showing the direction and distance of the well to at least two (2) nearby reference points such as roads, intersections and streams. Identify roads with State Highway road identification numbers.

Submit original to the Division of Environmental Management, one copy to the Driller, and one copy to the owner.

GW-30 Revised 7/17/92

END

MACON COUNTY MSW LANDFILL
Well Abandonment Information

Well No. PZ4

55 Feet Deep
12 Feet of Water

Well was sterilized with Clorox and filled with concrete on 6-17-98 per Mitch Orr.

Shelley P. Rodefer, Treas.

MACON COUNTY MSW LANDFILL
Well Abandonment Information

Well No. PZ7

48 Feet Deep
No Water

Well was sterilized with Clorox and filled with concrete on 6-17-98 per Mitch Orr.

Shelley P. Rodefer, Treas.

MACON COUNTY MSW LANDFILL
Well Abandonment Information

Well No. PZ8

30 Feet Deep
4 Feet of Water

Well was sterilized with Clorox and filled with concrete on 6-17-98 per Mitch Orr.

Shelley P. Rodefer, Treas.

MACON COUNTY MSW LANDFILL
Well Abandonment Information

Well No. PZ8-A

60 Feet Deep
33 Feet of Water

Well was sterilized with Clorox and filled with concrete on 6-17-98 per Mitch Orr.

Shelley P. Rodefer, Treas

MACON COUNTY MSW LANDFILL
Well Abandonment Information

Well No. PZ3-A

92 Feet Deep
25 Feet of Water

Well was sterilized with Clorox and filled with concrete on 11-9-98 by D. R. Phillips.

Shelley P. Rodefer

MACON COUNTY MSW LANDFILL
Well Abandonment Information

Well No. PZ3

75 Feet Deep
8 Feet of Water

Well was sterilized with Clorox and filled with concrete on 11-9-98 by D. R. Phillips.

Shelley P. Rodefer

MACON COUNTY MSW LANDFILL
Well Abandonment Information

Well No. PZ10

96 Feet Deep
20 Feet of Water

Well was sterilized with Clorox and filled with concrete on 11-9-98 by D. R. Phillips.

Shelley P. Rodefer

MACON COUNTY MSW LANDFILL
Well Abandonment Information

Well No. PZ10-A

96 Feet Deep
20 Feet of Water

Well was sterilized with Clorox and filled with concrete on 11-9-98 by D. R. Phillips.

Shelley P. Rodefer

MACON COUNTY MSW LANDFILL
Well Abandonment Information

Ledford Residence

165 Feet Deep
35 Feet of Water

Well was sterilized with Clorox and filled with concrete on 11-9-98 by D. R. Phillips.

Shelley P. Rodefer

MACON COUNTY MSW LANDFILL
Well Abandonment Information

McCall Residence

Well not found, per D. R. Phillips 11-9-98.

Shelley P. Rodefer

MACON COUNTY MSW LANDFILL
Well Abandonment Information

Unitarian Church

Please see Well No. TB30. Already filled per Mitch Orr 11-6-98.

Shelley P. Rodefer

MACON COUNTY MSW LANDFILL
Well Abandonment Information

Well No. PZ9

58 Feet Deep
29 Feet of Water

Sterilized with Clorox and filled with concrete on 12-15-97 by Mitch Orr.

Shelley P. Rodefer

MACON COUNTY MSW LANDFILL
Well Abandonment Information

Well No. PZ11

68 Feet Deep
34 Feet of Water

Sterilized with Clorox and filled with concrete on 12-15-97 by Mitch Orr.

Shelley P. Rodefer

MACON COUNTY MSW LANDFILL
Well Abandonment Information

Well No. MW16

33 Feet Deep
16 Feet of Water

Sterilized with Clorox and filled with concrete on 5-19-98 by Mitch Orr.

Shelley P. Rodefer

MACON COUNTY MSW LANDFILL
Well Abandonment Information

Well No. MW16-A

23 Feet Deep
11 Feet of Water

Sterilized with Clorox and filled with concrete on 5-19-98 by Mitch Orr.

Shelley P. Rodefer

MACON COUNTY MSW LANDFILL
Well Abandonment Information

Well No. B21

This well was already filled with dirt per Mitch Orr 11-6-98.

Shelley P. Rodefer

2086.3 - 40 = 2046.3

MACON COUNTY MSW LANDFILL
Well Abandonment Information

Well No. B27

This well was already filled with dirt per Mitch Orr 11-6-98.

Shelley P. Rodefer

2085 - 39 = 2046

MACON COUNTY MSW LANDFILL
Well Abandonment Information

Well No. B28

This well was already filled with dirt per Mitch Orr 11-6-98.

Shelley P. Rodefer

2095.9 - 59 = 2036.9