5103Map2002 - Batch No.___

/

34

Johnston Co.

5103 2002
map

JOHNSTON COUNTY, NORTH CAROLINA
DEPARTMENT OF PUBLIC UTILITIES

MSW LANDFILL PHASE 4A
CELL 1
CONSTRUCTION DRAWINGS

FEBRUARY 2002

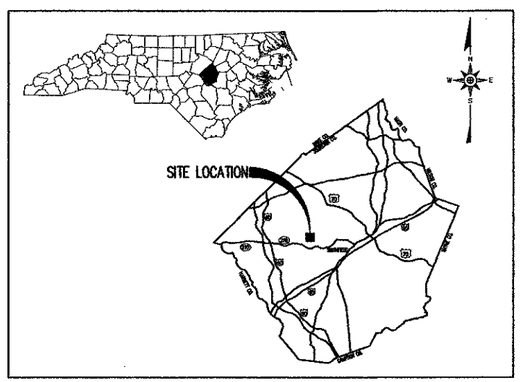

VICINITY MAP
NOT TO SCALE

ISSUED FOR CONSTRUCTION

SHEET NO.	DRAWING NO.	DRAWING TITLE
1	1	TITLE/COVER SHEET
2	E1	EXISTING SITE CONDITIONS
3	E2	SITE DEVELOPMENT PLAN
4	E3	SUBGRADE GRADING PLAN
5	E4	COMPOSITE LINER GRADING PLAN
6	E5	LEACHATE MANAGEMENT SYSTEMS – LEAK DETECTION PIPING
7	E6	LEACHATE MANAGEMENT SYSTEMS – PRIMARY COLLECTION PIPING
8	E7	LEACHATE FORCEMAIN PLAN AND PROFILE
9	G1	PERIMETER BERM DETAILS
10	G2	LINER SYSTEM DETAILS (SHEET 1 OF 2)
11	G3	LINER SYSTEM DETAILS (SHEET 2 OF 2)
12	G4	LEACHATE COLLECTION SYSTEM DETAILS (SHEET 1 OF 2)
13	G5	LEACHATE COLLECTION SYSTEM DETAILS (SHEET 2 OF 2)
14	G6	LEAK DETECTION SYSTEM DETAILS
15	G7	LEACHATE DISCHARGE PIPING DETAILS
16	R1	ROADWAY DETAILS
17	EC1	EROSION AND SEDIMENTATION CONTROL PLAN
18	EC2	EROSION AND SEDIMENTATION CONTROL DETAILS (SHEET 1 OF 4)
19	EC3	EROSION AND SEDIMENTATION CONTROL DETAILS (SHEET 2 OF 4)
20	EC4	EROSION AND SEDIMENTATION CONTROL DETAILS (SHEET 3 OF 4)
21	EC5	EROSION AND SEDIMENTATION CONTROL DETAILS (SHEET 4 OF 4)
22	LFG1	LANDFILL GAS MANAGEMENT PLAN
23	LFG2	LANDFILL GAS MANAGEMENT DETAILS (SHEET 1 OF 2)
24	LFG3	LANDFILL GAS MANAGEMENT DETAILS (SHEET 2 OF 2)
25	EL1	ELECTRICAL PLAN AND DETAILS
26	BA1	BORROW AREA D DEVELOPMENT PLAN

G.N. RICHARDSON & ASSOCIATES, INC.
Engineering and Geological Services
425 N. BOYLAN AVENUE RALEIGH, N.C. 27603
PHONE-919-828-0577 FAX-919-828-3899 WWW.GNRA.COM

NORTH CAROLINA PROFESSIONAL SEAL 8895 ENGINEER GREGORY N. RICHARDSON 3/29/02

NORTH CAROLINA PROFESSIONAL SEAL 021666 ENGINEER PETER K. SCHEER 3/26/02

FILE NAME JOHN-D0224

G:\-cad\JOHNSTON\John-14\const-issue\sheets\JOHN-D0224.dwg DATE: MAR 26, 2002 TIME: 1:56 PM

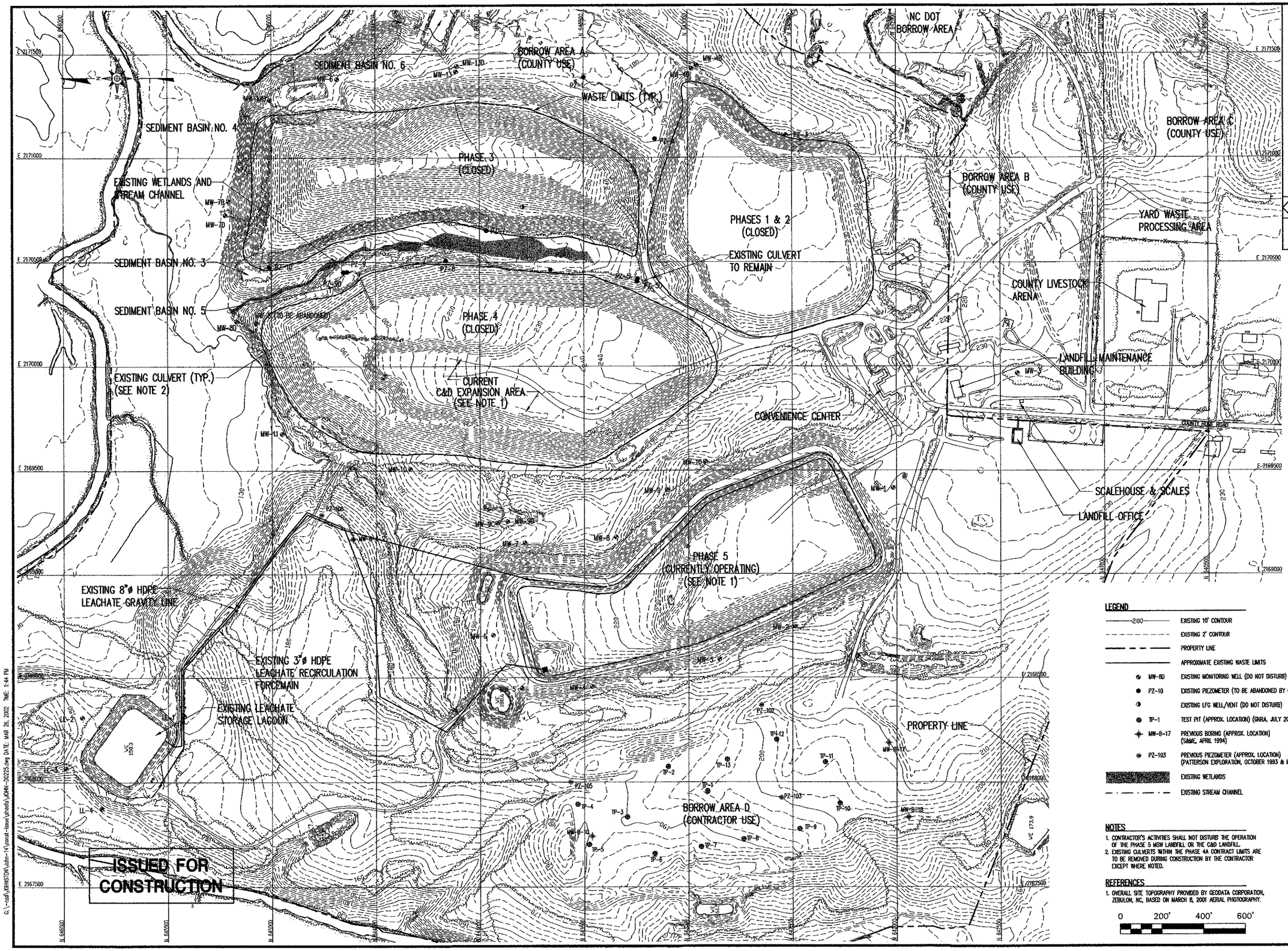

LEGEND

200	EXISTING 10' CONTOUR
	EXISTING 2' CONTOUR
	PROPERTY LINE
	APPROXIMATE EXISTING WASTE LIMITS
MW-8D	EXISTING MONITORING WELL (DO NOT DISTURB)
PZ-10	EXISTING PIEZOMETER (TO BE ABANDONED BY CONTRACTOR)
	EXISTING LFG WELL/VENT (DO NOT DISTURB)
TP-1	TEST PIT (APPROX. LOCATION) (GNRA, JULY 2001)
MW-B-17	PREVIOUS BORING (APPROX. LOCATION) (S&ME, APRIL 1994)
PZ-103	PREVIOUS PIEZOMETER (APPROX. LOCATION) (PATTERSON EXPLORATION, OCTOBER 1993 & MARCH 1994)
	EXISTING WETLANDS
	EXISTING STREAM CHANNEL

NOTES

1. CONTRACTOR'S ACTIVITIES SHALL NOT DISTURB THE OPERATION OF THE PHASE 5 MSW LANDFILL OR THE C&D LANDFILL.
2. EXISTING CULVERTS WITHIN THE PHASE 4A CONTRACT LIMITS ARE TO BE REMOVED DURING CONSTRUCTION BY THE CONTRACTOR EXCEPT WHERE NOTED.

REFERENCES

1. OVERALL SITE TOPOGRAPHY PROVIDED BY GEODATA CORPORATION, ZEBULON, NC, BASED ON MARCH 8, 2001 AERIAL PHOTOGRAPHY.

0 200' 400' 600'

REVISION	DATE	NO.

G.N. RICHARDSON & ASSOCIATES, INC.
Engineering and Geological Services
425 N. BOYLAN AVENUE RALEIGH, N.C. 27603
PHONE-919-828-0577 FAX-919-828-3899 WWW.GNRA.COM

SEAL

PROJECT TITLE: JOHNSTON COUNTY MSW LANDFILL PHASE 4A CELL 1 CONSTRUCTION DRAWINGS

DRAWING TITLE: EXISTING SITE CONDITIONS

DESIGNED BY: P.K.S.	DRAWN BY: C.T.J.
CHECKED BY: G.N.R.	PROJECT NO.: JOHN-14
SCALE: AS SHOWN	DATE: FEB. 2002
FILE NAME: JOHN-D0225	
SHEET NO. 2	DRAWING NO. E1

G:\-cad\JOHNSTON\John-14\const-issue\photo\JOHN-D0225.dwg DATE: MAR 26, 2002 TIME: 1:44 PM

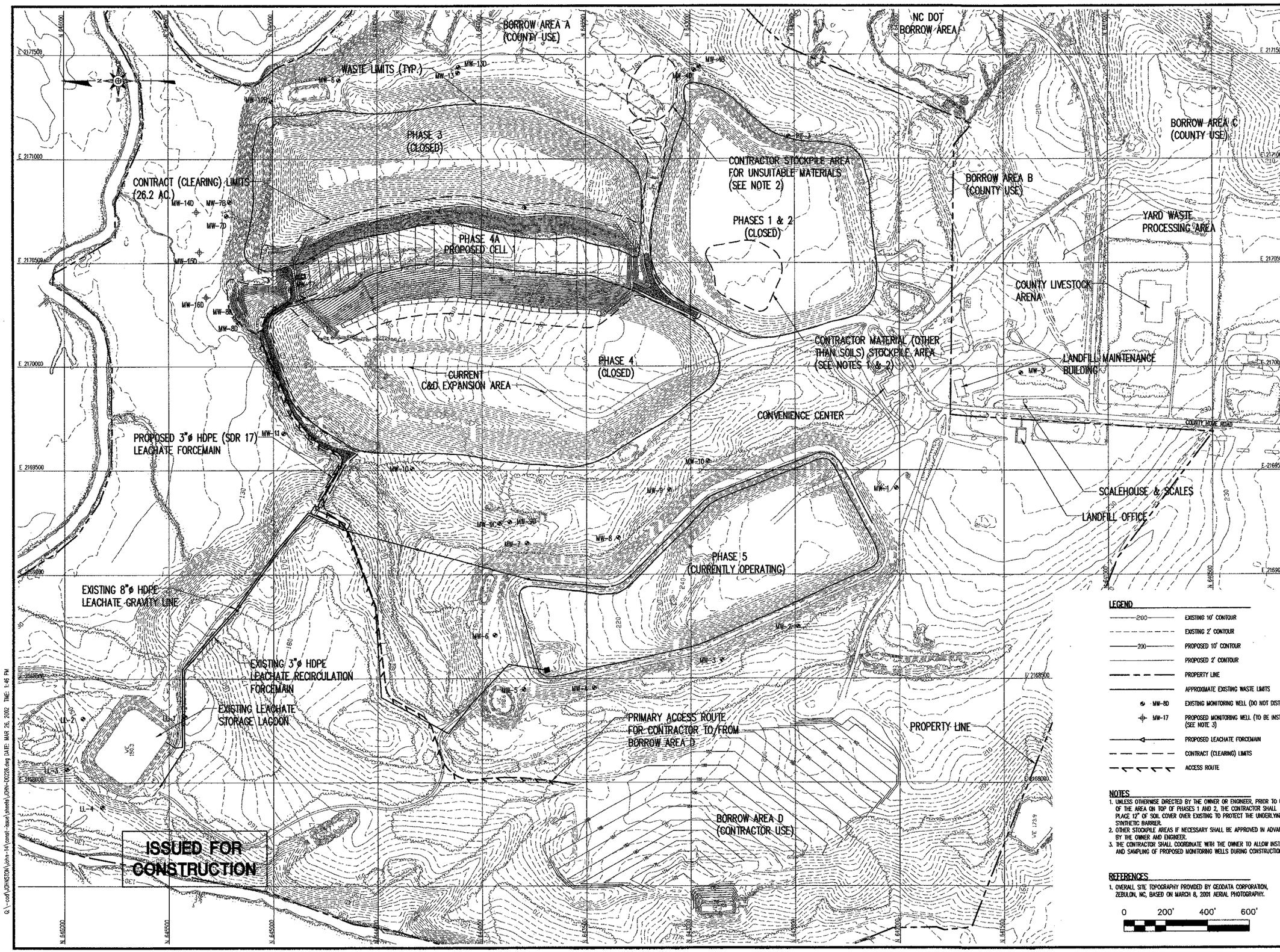

LEGEND

200	EXISTING 10' CONTOUR
	EXISTING 2' CONTOUR
200	PROPOSED 10' CONTOUR
	PROPOSED 2' CONTOUR
	PROPERTY LINE
	APPROXIMATE EXISTING WASTE LIMITS
MW-8D	EXISTING MONITORING WELL (DO NOT DISTURB)
MW-17	PROPOSED MONITORING WELL (TO BE INSTALLED BY OWNER) (SEE NOTE 3)
	PROPOSED LEACHATE FORCEMAIN
	CONTRACT (CLEARING) LIMITS
	ACCESS ROUTE

NOTES

1. UNLESS OTHERWISE DIRECTED BY THE OWNER OR ENGINEER, PRIOR TO USE OF THE AREA ON TOP OF PHASES 1 AND 2, THE CONTRACTOR SHALL PLACE 12" OF SOIL COVER OVER EXISTING TO PROTECT THE UNDERLYING SYNTHETIC BARRIER.
2. OTHER STOCKPILE AREAS IF NECESSARY SHALL BE APPROVED IN ADVANCE BY THE OWNER AND ENGINEER.
3. THE CONTRACTOR SHALL COORDINATE WITH THE OWNER TO ALLOW INSTALLATION AND SAMPLING OF PROPOSED MONITORING WELLS DURING CONSTRUCTION OF CELL 1.

REFERENCES

1. OVERALL SITE TOPOGRAPHY PROVIDED BY GEODATA CORPORATION, ZEBULON, NC, BASED ON MARCH 8, 2001 AERIAL PHOTOGRAPHY.

0 200' 400' 600'

G.N. RICHARDSON & ASSOCIATES, INC.
Engineering and Geological Services
425 N. BOYLAN AVENUE RALEIGH, N.C. 27603
PHONE-919-828-0577 FAX-919-828-3899 WWW.GNRA.COM

SEAL: NORTH CAROLINA PROFESSIONAL ENGINEER SEAL 021666 PETER K. SCHEER 3/26/02

SEAL: NORTH CAROLINA PROFESSIONAL ENGINEER SEAL 8895 GREGORY N. RICHARDSON 3/26/02

PROJECT TITLE: JOHNSTON COUNTY MSW LANDFILL PHASE 4A CELL 1 CONSTRUCTION DRAWINGS

DRAWING TITLE: SITE DEVELOPMENT PLAN

DESIGNED BY: P.K.S.	DRAWN BY: C.T.J.
CHECKED BY: G.N.R.	PROJECT NO.: JOHN-14
SCALE: AS SHOWN	DATE: FEB. 2002
FILE NAME: JOHN-D0226	
SHEET NO. 3	DRAWING NO. E2

Q:\-cad\JOHNSTON\John-14\const-issue\sheets\JOHN-D0226.dwg DATE: MAR 26, 2002 TIME: 1:46 PM

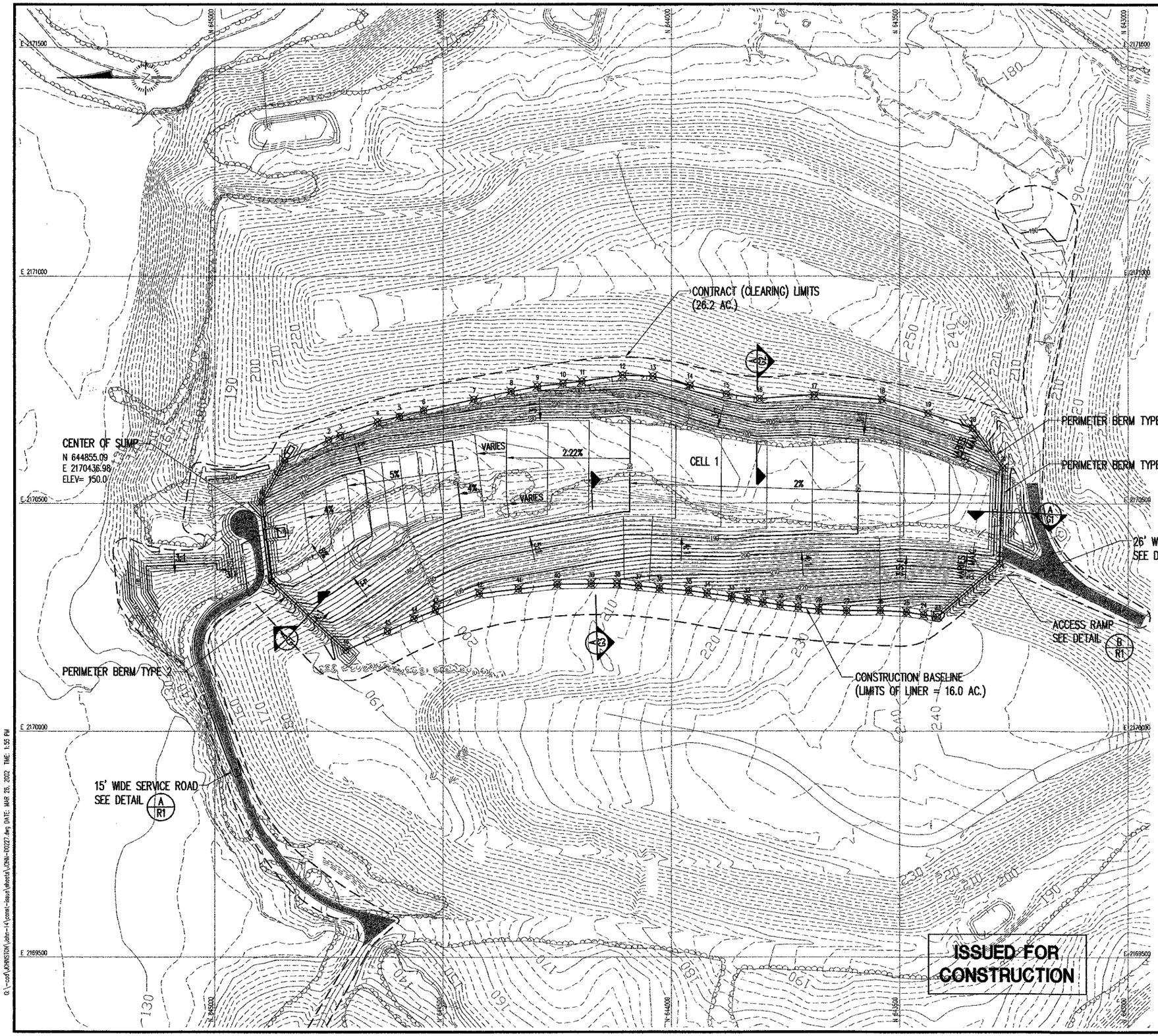

CONSTRUCTION BASLINE COORDINATES		
NODE ID	NORTHING	EASTING
1	644847.48	2170595.02
2	644751.30	2170640.32
3	644725.50	2170650.84
4	644644.20	2170680.00
5	644596.12	2170692.20
6	644543.02	2170704.78
7	644433.00	2170729.70
8	644351.36	2170747.29
9	644293.99	2170758.75
10	644237.76	2170765.20
11	644196.48	2170769.93
12	644107.21	2170783.29
13	644040.85	2170780.64
14	643959.77	2170760.79
15	643880.02	2170741.27
16	643807.53	2170731.06
17	643687.31	2170739.56
18	643538.92	2170729.54
19	643438.16	2170698.95
20	643340.26	2170665.75
21	643274.35	2170578.30
22	643281.68	2170369.04
23	643417.58	2170253.34
24	643448.04	2170258.05
25	643485.64	2170263.87
26	643543.01	2170267.03
27	643616.60	2170265.87
28	643677.54	2170269.06
29	643722.77	2170273.92
30	643762.60	2170278.19
31	643800.25	2170284.17
32	643834.73	2170290.32
33	643869.44	2170296.50
34	643922.55	2170303.96
35	643962.87	2170309.59
36	644027.16	2170314.70
37	644072.85	2170320.04
38	644119.74	2170325.52
39	644176.50	2170324.62
40	644251.12	2170323.43
41	644335.78	2170313.47
42	644421.33	2170303.41
43	644517.45	2170268.29
44	644564.24	2170249.20
45	644622.66	2170221.12
46	644714.09	2170179.06
47	644876.58	2170331.31
48	644897.73	2170504.89

LEGEND

- EXISTING 10' CONTOUR
- EXISTING 2' CONTOUR
- PROPOSED 10' CONTOUR
- PROPOSED 2' CONTOUR
- CONTRACT (CLEARING) LIMITS
- CONSTRUCTION BASELINE
- CONSTRUCTION BASELINE CONTROL POINT

NOTES

1. CONTOURS SHOWN ON PIGGYBACK AREAS MAY VARY SOMEWHAT DUE TO SETTLEMENT OF UNDERLYING WASTE.
2. CONTOURS SHOWN REPRESENT TOP OF SUBGRADE.

REFERENCES

1. OVERALL SITE TOPOGRAPHY PROVIDED BY GEODATA CORPORATION, ZEBULON, NC, BASED ON MARCH 8, 2001 AERIAL PHOTOGRAPHY.

0 100' 200' 300'

G.N. RICHARDSON & ASSOCIATES, INC.
Engineering and Geological Services
425 N. BOYLAN AVENUE RALEIGH, N.C. 27603
PHONE-919-828-0577 FAX-919-828-3899 WWW.GNRA.COM

PROJECT TITLE: JOHNSTON COUNTY MSW LANDFILL PHASE 4A CELL 1 CONSTRUCTION DRAWINGS

DRAWING TITLE: SUBGRADE GRADING PLAN

DESIGNED BY: P.K.S.	DRAWN BY: C.T.J.
CHECKED BY: G.N.R.	PROJECT NO.: JOHN-14
SCALE: AS SHOWN	DATE: FEB. 2002
FILE NAME: JOHN-D0227	
SHEET NO. 4	DRAWING NO. E3

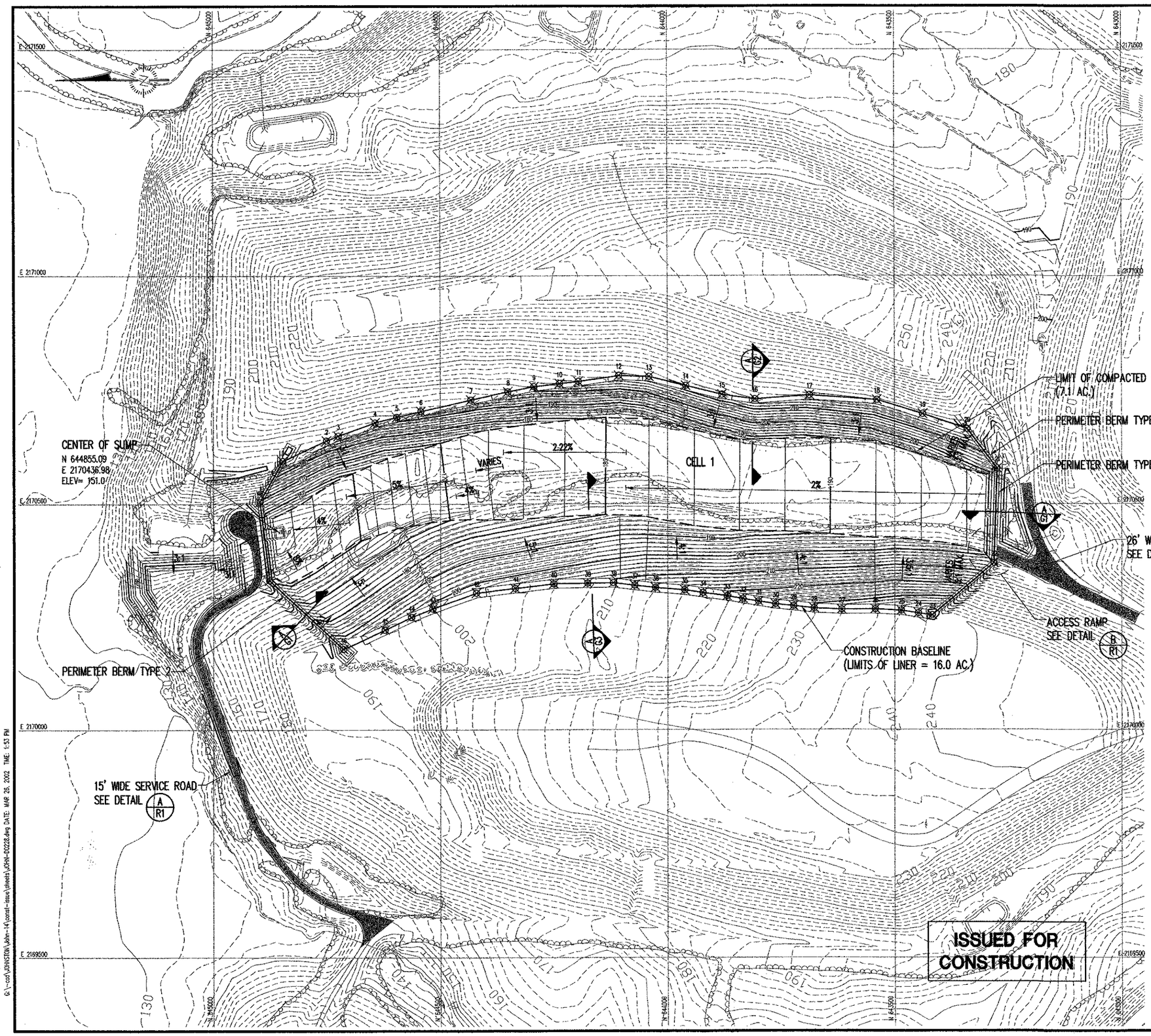

CONSTRUCTION BASLINE COORDINATES		
NODE ID	NORTHING	EASTING
1	644847.48	2170595.02
2	644751.30	2170640.32
3	644725.50	2170650.84
4	644644.20	2170680.00
5	644596.12	2170692.20
6	644543.02	2170704.78
7	644433.00	2170729.70
8	644351.36	2170747.29
9	644293.99	2170758.75
10	644237.76	2170765.20
11	644196.48	2170769.93
12	644107.21	2170783.29
13	644040.85	2170780.64
14	643959.77	2170760.79
15	643880.02	2170741.27
16	643807.53	2170731.06
17	643687.31	2170739.56
18	643538.92	2170729.54
19	643438.16	2170698.95
20	643340.26	2170665.75
21	643274.35	2170578.30
22	643281.68	2170369.04
23	643417.58	2170253.34
24	643448.04	2170258.05
25	643485.64	2170263.87
26	643543.01	2170267.03
27	643616.60	2170265.87
28	643677.54	2170269.06
29	643722.77	2170273.92
30	643762.60	2170278.19
31	643800.25	2170284.17
32	643834.73	2170290.32
33	643869.44	2170296.50
34	643922.55	2170303.96
35	643962.87	2170309.59
36	644027.16	2170314.70
37	644072.85	2170320.04
38	644119.74	2170325.52
39	644176.50	2170324.62
40	644251.12	2170323.43
41	644335.78	2170313.47
42	644421.33	2170303.41
43	644517.45	2170268.29
44	644564.24	2170249.20
45	644622.66	2170221.12
46	644714.09	2170179.06
47	644876.56	2170331.31
48	644897.73	2170504.89

LEGEND

- 200 — EXISTING 10' CONTOUR
- EXISTING 2' CONTOUR
- 200 — PROPOSED 10' CONTOUR
- PROPOSED 2' CONTOUR
- CONSTRUCTION BASELINE
- 20 — CONSTRUCTION BASELINE CONTROL POINT

NOTES

1. CONTOURS SHOWN ON PIGGYBACK AREAS MAY VARY SOMEWHAT DUE TO SETTLEMENT OF UNDERLYING WASTE.
2. CONTOURS SHOWN REPRESENT TOP OF SUBGRADE AND TOP OF COMPACTED SOIL LINER (WHERE APPLICABLE).

REFERENCES

1. OVERALL SITE TOPOGRAPHY PROVIDED BY GEODATA CORPORATION, ZEBULON, NC, BASED ON MARCH 8, 2001 AERIAL PHOTOGRAPHY.

0 100' 200' 300'

G.N. RICHARDSON & ASSOCIATES, INC.
Engineering and Geological Services
425 N. BOYLAN AVENUE RALEIGH, N.C. 27603
PHONE-919-828-0577 FAX-919-828-3899 WWW.GNRA.COM

SEAL: NORTH CAROLINA PROFESSIONAL ENGINEER SEAL 8895 GREGORY N. RICHARDSON 3/24/02

SEAL: NORTH CAROLINA PROFESSIONAL ENGINEER SEAL 021666 PIETER K. SCHEER 3/24/02

PROJECT TITLE: JOHNSTON COUNTY MSW LANDFILL PHASE 4A CELL 1 CONSTRUCTION DRAWINGS

DRAWING TITLE: COMPOSITE LINER GRADING PLAN

DESIGNED BY: P.K.S.	DRAWN BY: C.T.J.
CHECKED BY: C.N.R.	PROJECT NO.: JOHN-14
SCALE: AS SHOWN	DATE: FEB. 2002
FILE NAME: JOHN-D0228	
SHEET NO. 5	DRAWING NO. E4

G:\-cad\JOHNSTON\John-14\const-issue\sheets\JOHN-D0228.dwg DATE: MAR 26, 2002 TIME: 1:53 PM

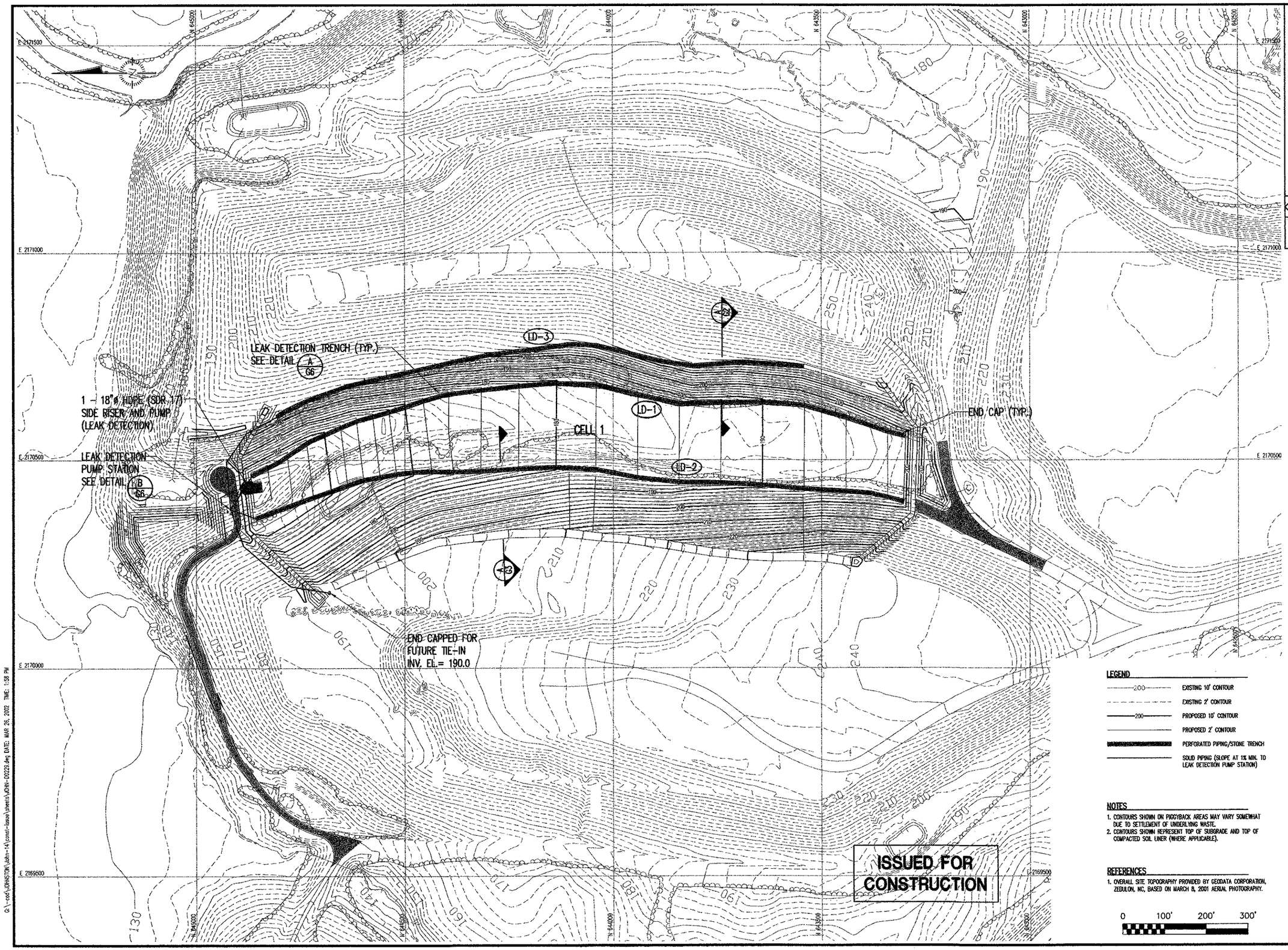

G:\-cad\JOHNSTON\John-14\Const-Issue\Sheets\JOHN-D0229.dwg DATE: MAR 26, 2002 TIME: 1:58 PM

DATE	NO.	REVISION

G.N. RICHARDSON & ASSOCIATES, INC.
Engineering and Geological Services
425 N. BOYLAN AVENUE RALEIGH, N.C. 27603
PHONE-919-828-0577 FAX-919-828-3899 WWW.GNRA.COM

SEAL

SEAL

PROJECT TITLE:
JOHNSTON COUNTY
MSW LANDFILL PHASE 4A
CELL 1
CONSTRUCTION DRAWINGS

DRAWING TITLE:
LEACHATE MANAGEMENT SYSTEMS
LEAK DETECTION PIPING

DESIGNED BY: P.K.S.	DRAWN BY: C.T.J.
CHECKED BY: G.N.R.	PROJECT NO.: JOHN-14
SCALE: AS SHOWN	DATE: FEB. 2002
FILE NAME: JOHN-D0229	
SHEET NO. 6	DRAWING NO. E5

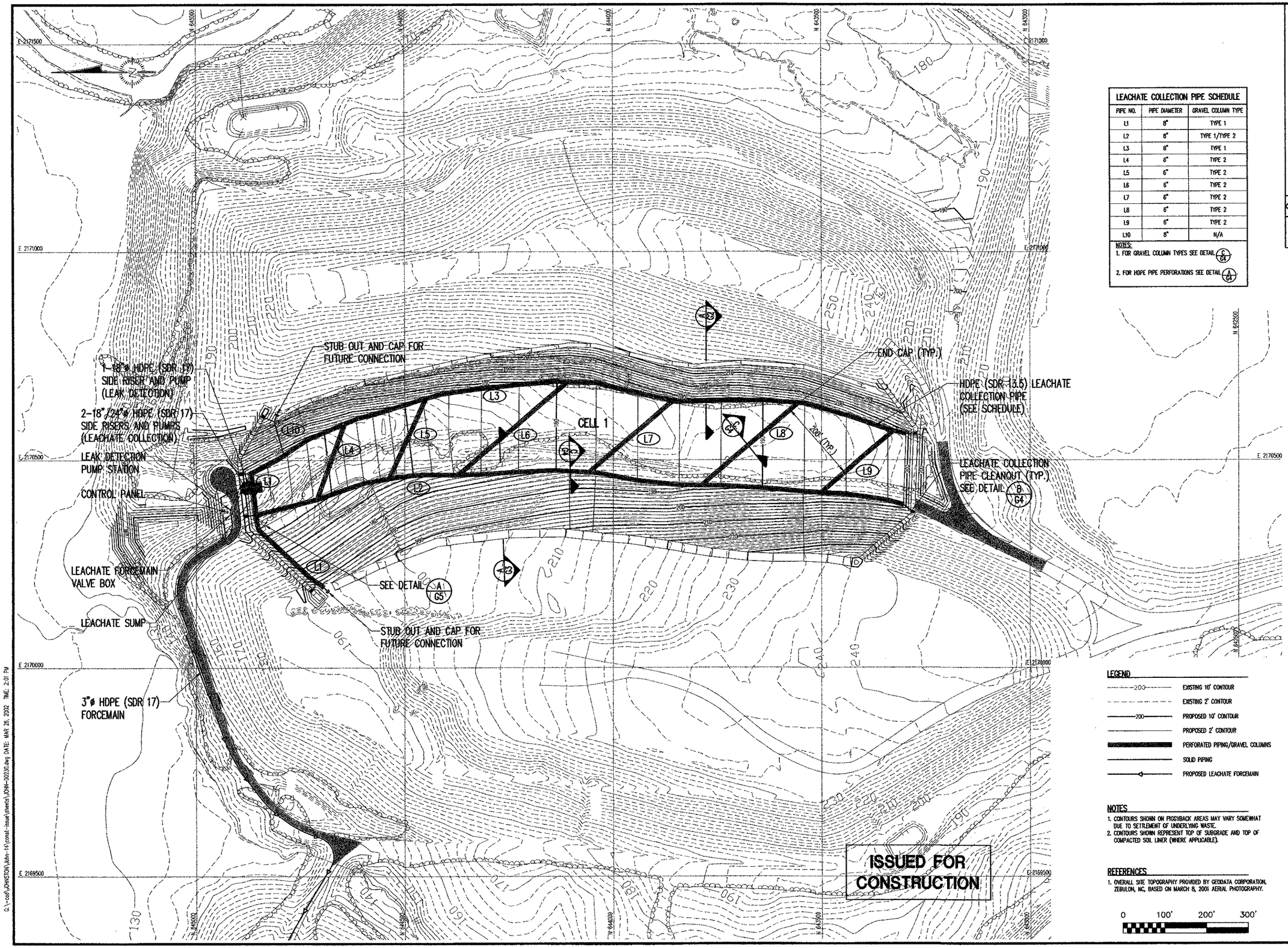

LEACHATE COLLECTION PIPE SCHEDULE		
PIPE NO.	PIPE DIAMETER	GRAVEL COLUMN TYPE
L1	8"	TYPE 1
L2	8"	TYPE 1/TYPE 2
L3	8"	TYPE 1
L4	6"	TYPE 2
L5	6"	TYPE 2
L6	6"	TYPE 2
L7	6"	TYPE 2
L8	6"	TYPE 2
L9	6"	TYPE 2
L10	8"	N/A

NOTES:
1. FOR GRAVEL COLUMN TYPES SEE DETAIL C/G4
2. FOR HDPE PIPE PERFORATIONS SEE DETAIL A/G4

LEGEND

- EXISTING 10' CONTOUR
- EXISTING 2' CONTOUR
- PROPOSED 10' CONTOUR
- PROPOSED 2' CONTOUR
- PERFORATED PIPING/GRAVEL COLUMNS
- SOLID PIPING
- PROPOSED LEACHATE FORCEMAIN

NOTES

1. CONTOURS SHOWN ON PIGGYBACK AREAS MAY VARY SOMEWHAT DUE TO SETTLEMENT OF UNDERLYING WASTE.
2. CONTOURS SHOWN REPRESENT TOP OF SUBGRADE AND TOP OF COMPACTED SOIL LINER (WHERE APPLICABLE).

REFERENCES

1. OVERALL SITE TOPOGRAPHY PROVIDED BY GEODATA CORPORATION, ZEBULON, NC, BASED ON MARCH 8, 2001 AERIAL PHOTOGRAPHY.

0 100' 200' 300'

ISSUED FOR CONSTRUCTION

DATE	NO.	REVISION

G.N. RICHARDSON & ASSOCIATES, INC.
Engineering and Geological Services
425 N. BOYLAN AVENUE RALEIGH, N.C. 27603
PHONE-919-828-0577 FAX-919-828-3899 WWW.GNRA.COM

SEAL: CAROLINA ENGINEER, SEAL 021666, PIETER K. SCHEER, 3/26/02

SEAL: NORTH CAROLINA PROFESSIONAL ENGINEER, SEAL 8895, GREGORY N. RICHARDSON, 3/26/02

PROJECT TITLE: JOHNSTON COUNTY MSW LANDFILL PHASE 4A CELL 1 CONSTRUCTION DRAWINGS

DRAWING TITLE: LEACHATE MANAGEMENT SYSTEMS PRIMARY COLLECTION PIPING

DESIGNED BY: P.K.S.	DRAWN BY: C.T.J.
CHECKED BY: G.N.R.	PROJECT NO.: JOHN-14
SCALE: AS SHOWN	DATE: FEB. 2002
FILE NAME: JOHN-00230	
SHEET NO. 7	DRAWING NO. E6

G:\-cad\JOHNSTON\John-14\const-issue\sheets\JOHN-00230.dwg DATE: MAR 26, 2002 TIME: 2:01 PM

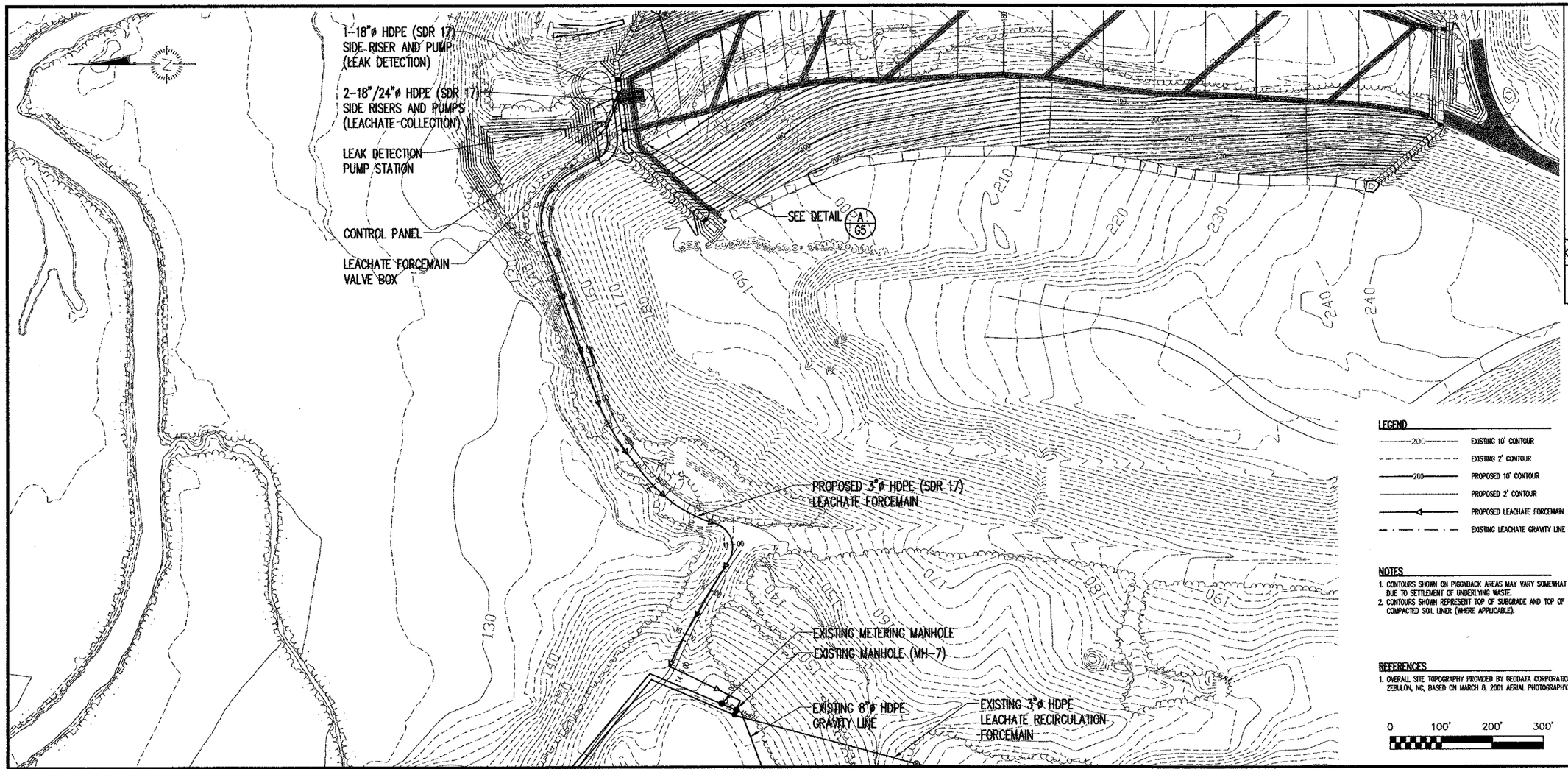

PLAN VIEW

LEGEND

- EXISTING 10' CONTOUR
- EXISTING 2' CONTOUR
- PROPOSED 10' CONTOUR
- PROPOSED 2' CONTOUR
- PROPOSED LEACHATE FORCEMAIN
- EXISTING LEACHATE GRAVITY LINE

NOTES

1. CONTOURS SHOWN ON PIGGYBACK AREAS MAY VARY SOMEWHAT DUE TO SETTLEMENT OF UNDERLYING WASTE.
2. CONTOURS SHOWN REPRESENT TOP OF SUBGRADE AND TOP OF COMPACTED SOIL LINER (WHERE APPLICABLE).

REFERENCES

1. OVERALL SITE TOPOGRAPHY PROVIDED BY GEODATA CORPORATION, ZEBULON, NC, BASED ON MARCH 8, 2001 AERIAL PHOTOGRAPHY.

0 100' 200' 300'

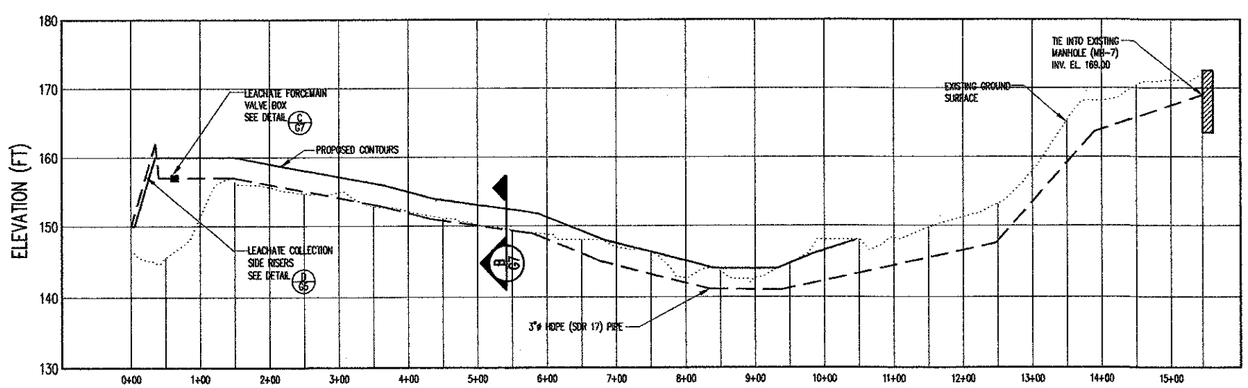

PROFILE

ISSUED FOR CONSTRUCTION

30' 20' 10' 0

0 100' 200' 300'

G.N. RICHARDSON & ASSOCIATES, INC.
Engineering and Geological Services
425 N. BOYLAN AVENUE RALEIGH, N.C. 27603
PHONE-919-828-0577 FAX-919-828-3899 WWW.GNRA.COM

SEAL: NORTH CAROLINA PROFESSIONAL ENGINEER SEAL 021666 PIETER K. SCHEER 3/26/02

SEAL: NORTH CAROLINA PROFESSIONAL ENGINEER SEAL 8895 GREGORY N. RICHARDSON 3/26/02

PROJECT TITLE: JOHNSTON COUNTY MSW LANDFILL PHASE 4A CELL 1 CONSTRUCTION DRAWINGS

DRAWING TITLE: LEACHATE FORCEMAIN PLAN AND PROFILE

DESIGNED BY: P.K.S.	DRAWN BY: C.T.J.
CHECKED BY: G.N.R.	PROJECT NO.: JOHN-14
SCALE: AS SHOWN	DATE: FEB. 2002
FILE NAME: JOHN-00231	
SHEET NO. 8	DRAWING NO. E7

G:\-cad\JOHNSTON\John-14\const-issue\sheets\JOHN-00231.dwg DATE: MAR 26, 2002 TIME: 2:04 PM

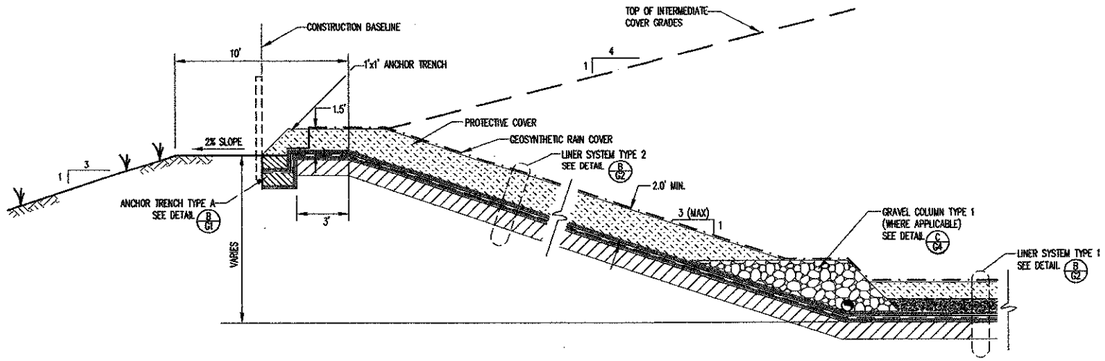

TYPE 1

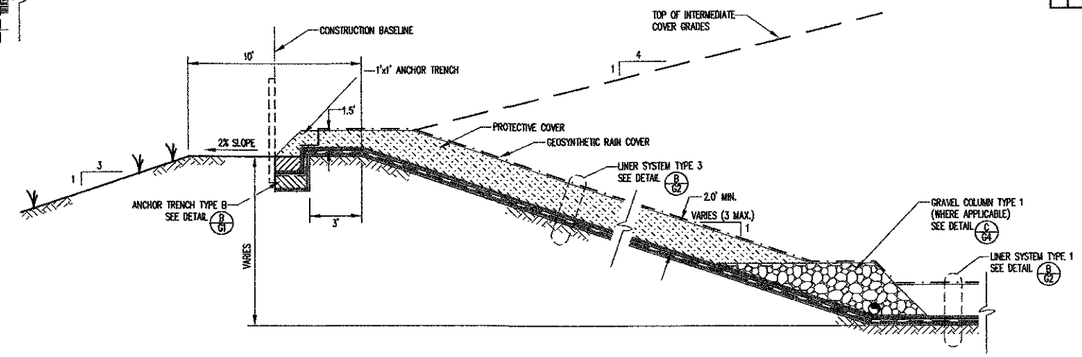

TYPE 2

PERIMETER BERM CROSS SECTIONS

DETAIL A/G1

SCALE: 1"=4'

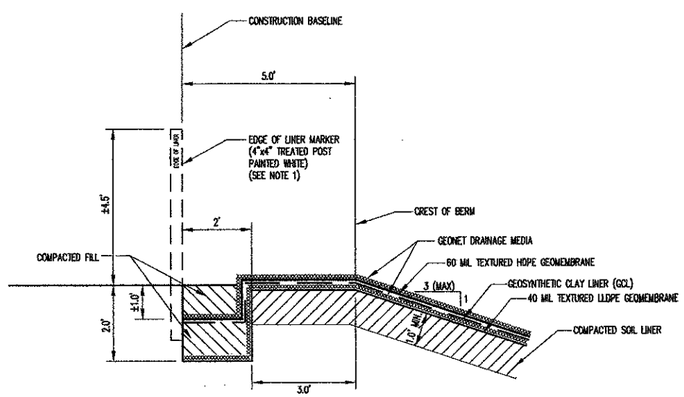

TYPE A

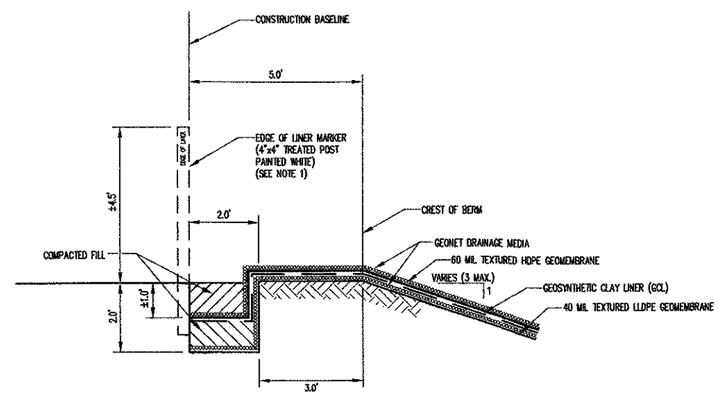

TYPE B

NOTES:

1. PLACE EDGE OF LINER MARKERS EVERY 100' ON-CENTER AND AT BREAK POINTS.
2. PROTECTIVE COVER AND GEOSYNTHETIC RAIN COVER NOT SHOWN FOR CLARITY.

ANCHOR TRENCH

DETAIL B/G1

SCALE: 1"= 2'

ISSUED FOR CONSTRUCTION

NO.	DATE	REVISION

G.N. RICHARDSON & ASSOCIATES, INC.
Engineering and Geological Services
425 N. BOYLAN AVENUE RALEIGH, N.C. 27603
PHONE-919-828-0577 FAX-919-828-3899 WWW.GNRA.COM

SEAL: CAROLINA GEOTECHNICAL SERVICES, INC. SEAL 021666 STANLEY PIETER K. SOLTYS 3/26/02

SEAL: NORTH CAROLINA PROFESSIONAL SEAL 8885 ENGINEER GREGORY N. RICHARDSON 3/26/02

PROJECT TITLE: JOHNSTON COUNTY MSW LANDFILL PHASE 4A CELL 1 CONSTRUCTION DRAWINGS

DRAWING TITLE: PERIMETER BERM DETAILS

DESIGNED BY: P.K.S.	DRAWN BY: C.T.J.
CHECKED BY: G.N.R.	PROJECT NO.: JOHN-14
SCALE: AS SHOWN	DATE: FEB. 2002
FILE NAME: JOHN-D0232	
SHEET NO. 9	DRAWING NO. G1

G:\-cad\JOHNSTON\John-14\const-issue\sheets\JOHN-D0232.dwg DATE: MAR 26, 2002 TIME: 2:07 PM

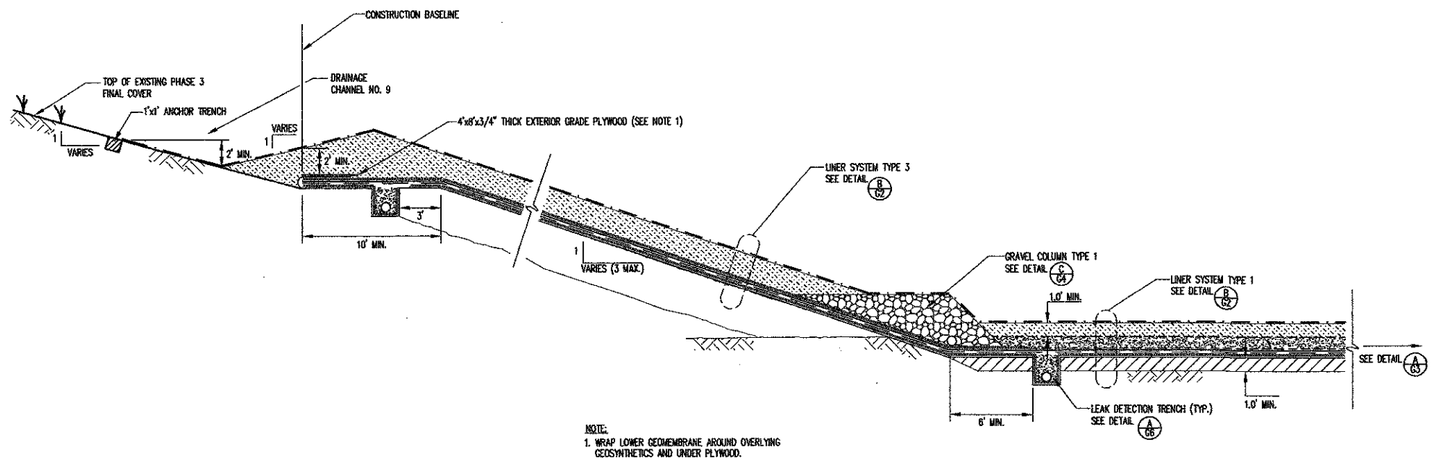

NOTE:
1. WRAP LOWER GEOMEMBRANE AROUND OVERLYING GEOSYNTHETICS AND UNDER PLYWOOD.

TYPICAL LINER SYSTEM CROSS SECTION – EAST SIDE

DETAIL A/G2
SCALE 1"= 5'

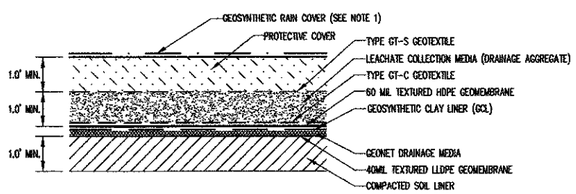

LINER SYSTEM–TYPE 1

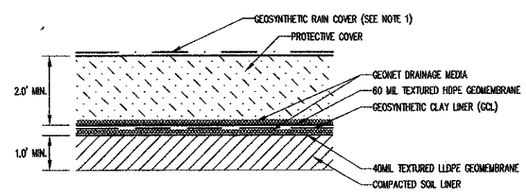

LINER SYSTEM–TYPE 2

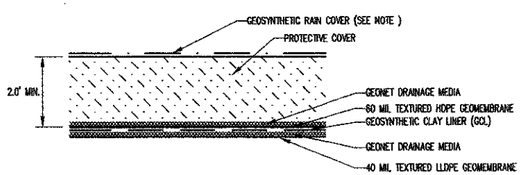

LINER SYSTEM–TYPE 3

NOTE:
1. FOR ANCHORAGE OF GEOSYNTHETIC RAIN COVER AGAINST WIND UPLIFT, SEE DETAIL C/G2

LINER SYSTEM CROSS SECTIONS

DETAIL B/G2
SCALE: 1"=2'

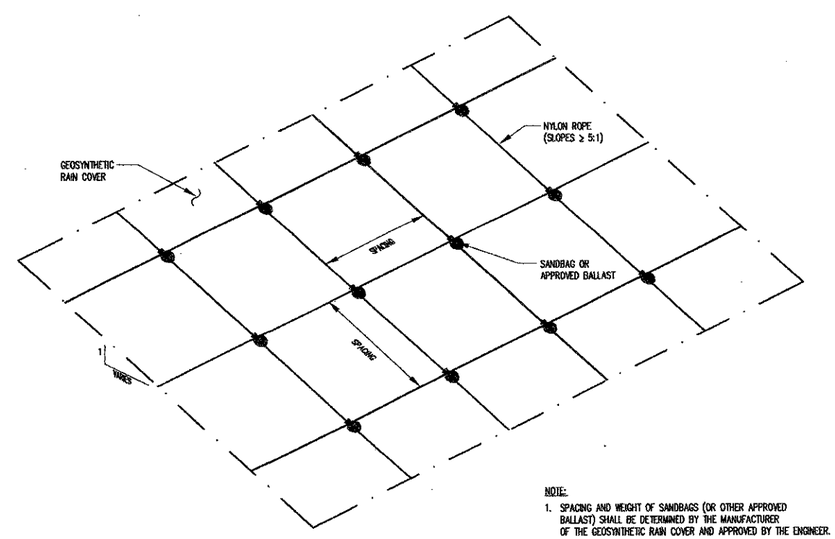

NOTE:
1. SPACING AND WEIGHT OF SANDBAGS (OR OTHER APPROVED BALLAST) SHALL BE DETERMINED BY THE MANUFACTURER OF THE GEOSYNTHETIC RAIN COVER AND APPROVED BY THE ENGINEER.

ANCHORAGE OF GEOSYNTHETIC RAIN COVER

DETAIL C/G2
NOT TO SCALE

ISSUED FOR CONSTRUCTION

G:\-cad\JOHNSTON\John-14\const-issue\sheets\JOHN-D0233.dwg DATE: MAR 26, 2002 TIME: 3:27 PM

G.N. RICHARDSON & ASSOCIATES, INC.
Engineering and Geological Services
425 N. BOYLAN AVENUE RALEIGH, N.C. 27603
PHONE-919-828-0577 FAX-919-828-3899 WWW.GNRA.COM

REVISION | NO. | DATE

SEAL: NORTH CAROLINA PROFESSIONAL ENGINEER SEAL 021666 PIETER K. SCHEER 3/26/02

SEAL: NORTH CAROLINA PROFESSIONAL ENGINEER SEAL 8895 GREGORY N. RICHARDSON 3/26/02

PROJECT TITLE: JOHNSTON COUNTY MSW LANDFILL PHASE 4A CELL 1 CONSTRUCTION DRAWINGS

DRAWING TITLE: LINER SYSTEM DETAILS (SHEET 1 OF 2)

DESIGNED BY: P.K.S.	DRAWN BY: C.T.J.
CHECKED BY: G.N.R.	PROJECT NO.: JOHN-14
SCALE: AS SHOWN	DATE: FEB. 2002
FILE NAME: JOHN-D0233	
SHEET NO. 10	DRAWING NO. G2

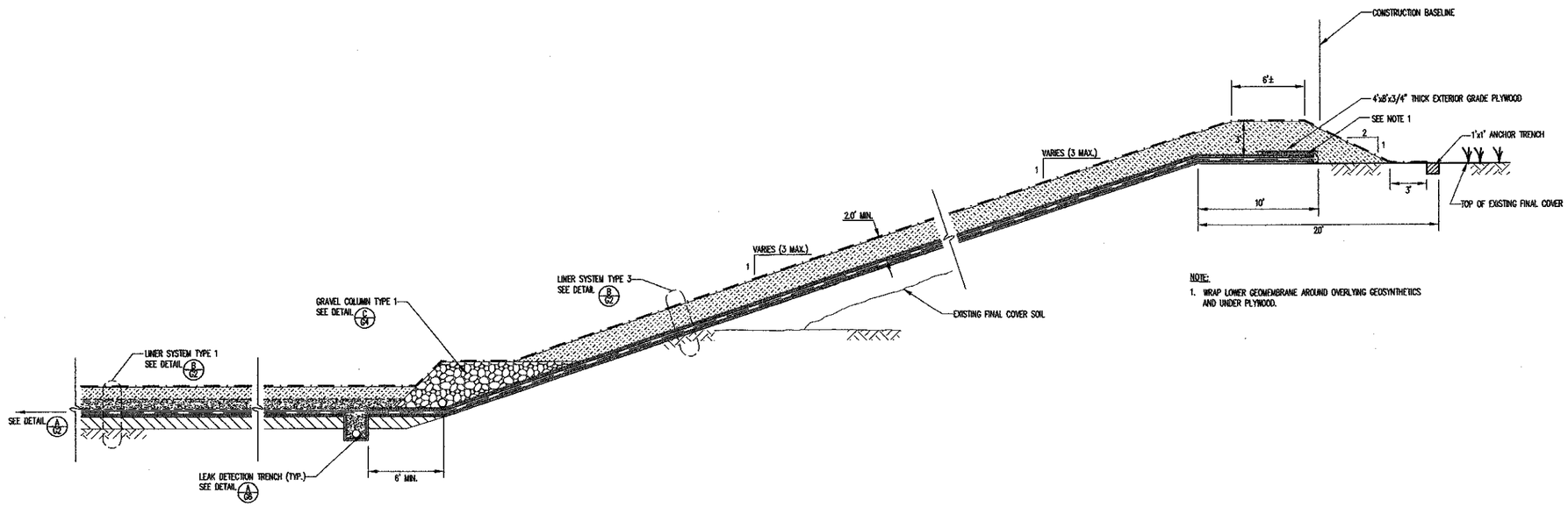

NOTE:

1. WRAP LOWER GEOMEMBRANE AROUND OVERLYING GEOSYNTHETICS AND UNDER PLYWOOD.

TYPICAL LINER SYSTEM CROSS SECTION – WEST SIDE

DETAIL A/G3
SCALE 1" = 5'

ISSUED FOR CONSTRUCTION

REVISION	DATE	NO.

G.N. RICHARDSON & ASSOCIATES, INC.
Engineering and Geological Services
425 N. BOYLAN AVENUE RALEIGH, N.C. 27603
PHONE-919-828-0577 FAX-919-828-3899 WWW.GNRA.COM

SEAL: SEAL 021866 ENGINEER PIETER K. SPRUIT 3/26/02

SEAL: SEAL 8895 PROFESSIONAL ENGINEER GREGORY N. RICHARDSON 3/26/02

PROJECT TITLE: JOHNSTON COUNTY MSW LANDFILL PHASE 4A CELL 1 CONSTRUCTION DRAWINGS

DRAWING TITLE: LINER SYSTEM DETAILS (SHEET 2 OF 2)

DESIGNED BY: P.K.S.	DRAWN BY: C.T.J.
CHECKED BY: G.N.R.	PROJECT NO.: JOHN-14
SCALE: AS SHOWN	DATE: FEB. 2002
FILE NAME: JOHN-D0234	
SHEET NO. 11	DRAWING NO. G3

G:\-cad\JOHNSTON\john-14\const-issue\sheets\JOHN-D0234.dwg DATE: MAR 26, 2002 TIME: 2:11 PM

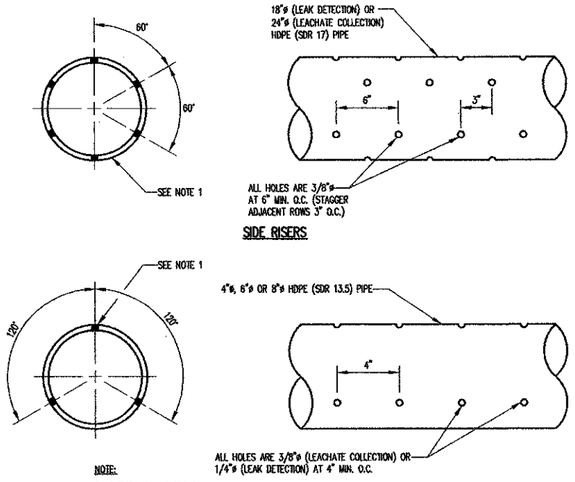

NOTE:
1. ORIENT PIPE AS SHOWN.

LEAK DETECTION / LEACHATE COLLECTION PIPING

HDPE PIPE PERFORATIONS

DETAIL A / G4
N.T.S.

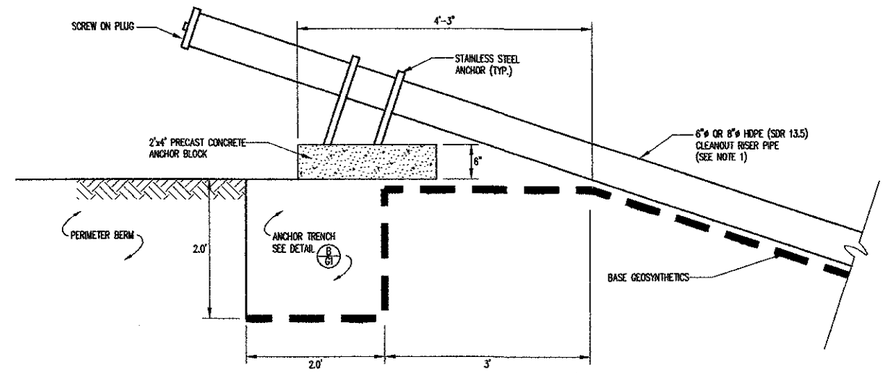

LEACHATE COLLECTION PIPE CLEANOUT
AT CREST OF SLOPE

DETAIL B / G4
NOT TO SCALE

NOTES:
1. RISER PIPE TO BE CONSTRUCTED OF SAME PIPE MATERIAL AS LEACHATE COLLECTION PIPE EXCEPT THAT RISER PIPE IS SOLID WALL.
2. CLEANOUT RISER TO BE EXTENDED DURING FINAL COVER CONSTRUCTION.
3. PROTECTIVE COVER AND GEOSYNTHETIC RAIN COVER NOT SHOWN FOR CLARITY.

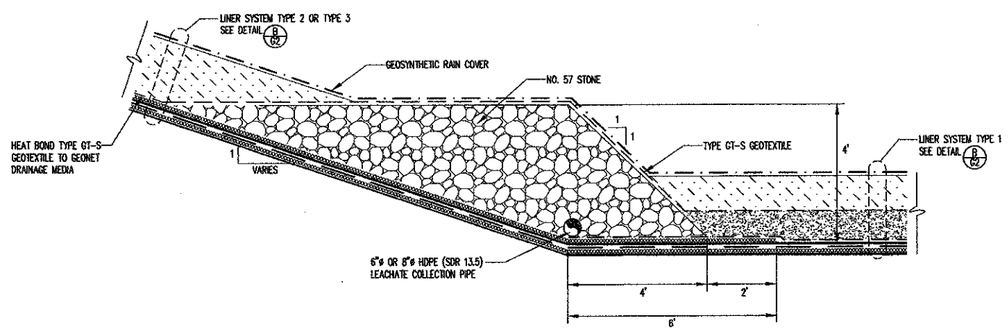

TYPE 1

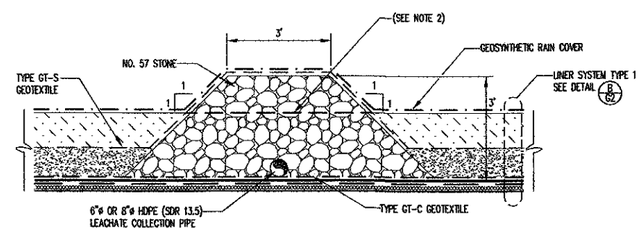

TYPE 2

GRAVEL COLUMN CROSS SECTIONS

DETAIL C / G4
SCALE: 1"= 2'

NOTES:
1. SOME LAYERS OF LINER SYSTEM AND LEAK DETECTION TRENCHES (WHERE APPLICABLE) NOT SHOWN FOR CLARITY.
2. AT THE LOW END OF TYPE 2 GRAVEL COLUMNS, LEAVE THE LAST 5 TO 10 FEET FLUSH WITH THE TOP OF PROTECTIVE COVER TO ALLOW STORMWATER TO FLOW TO THE LOW END OF THE CELL.

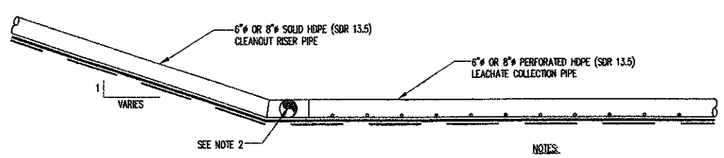

NOTES:
1. SOME LAYERS AND GRAVEL COLUMN (WHERE APPLICABLE) NOT SHOWN FOR CLARITY.
2. CONNECT TO CROSSING LEACHATE PIPING USING A CROSS FITTING.
3. FOR GRAVEL COLUMN, SEE DETAIL C/G4.

LEACHATE COLLECTION PIPE CLEANOUT
AT BASE OF SLOPE

DETAIL D / G4
NOT TO SCALE

ISSUED FOR CONSTRUCTION

NO.	DATE	REVISION

G.N. RICHARDSON & ASSOCIATES, INC.
Engineering and Geological Services
425 N. BOYLAN AVENUE RALEIGH, N.C. 27603
PHONE-919-828-0577 FAX-919-828-3899 WWW.GNRA.COM

SEAL: CAROLINA PROFESSIONAL ENGINEER SEAL 021666 ENGINEER PETER K. SHAW 3/26/02

SEAL: CAROLINA PROFESSIONAL ENGINEER SEAL 8895 ENGINEER GREGORY N. RICHARDSON 3/26/02

PROJECT TITLE: JOHNSTON COUNTY MSW LANDFILL PHASE 4A CELL 1 CONSTRUCTION DRAWINGS

DRAWING TITLE: LEACHATE COLLECTION SYSTEM DETAILS (SHEET 1 OF 2)

DESIGNED BY: P.K.S.	DRAWN BY: C.T.J.
CHECKED BY: G.N.R.	PROJECT NO.: JOHN-14
SCALE: AS SHOWN	DATE: FEB. 2002
FILE NAME: JOHN-D0235	
SHEET NO. 12	DRAWING NO. G4

G:\-cad\JOHNSTON\John-14\const-issue\sheets\JOHN-D0235.dwg DATE: MAR 26, 2002 TIME: 2:13 PM

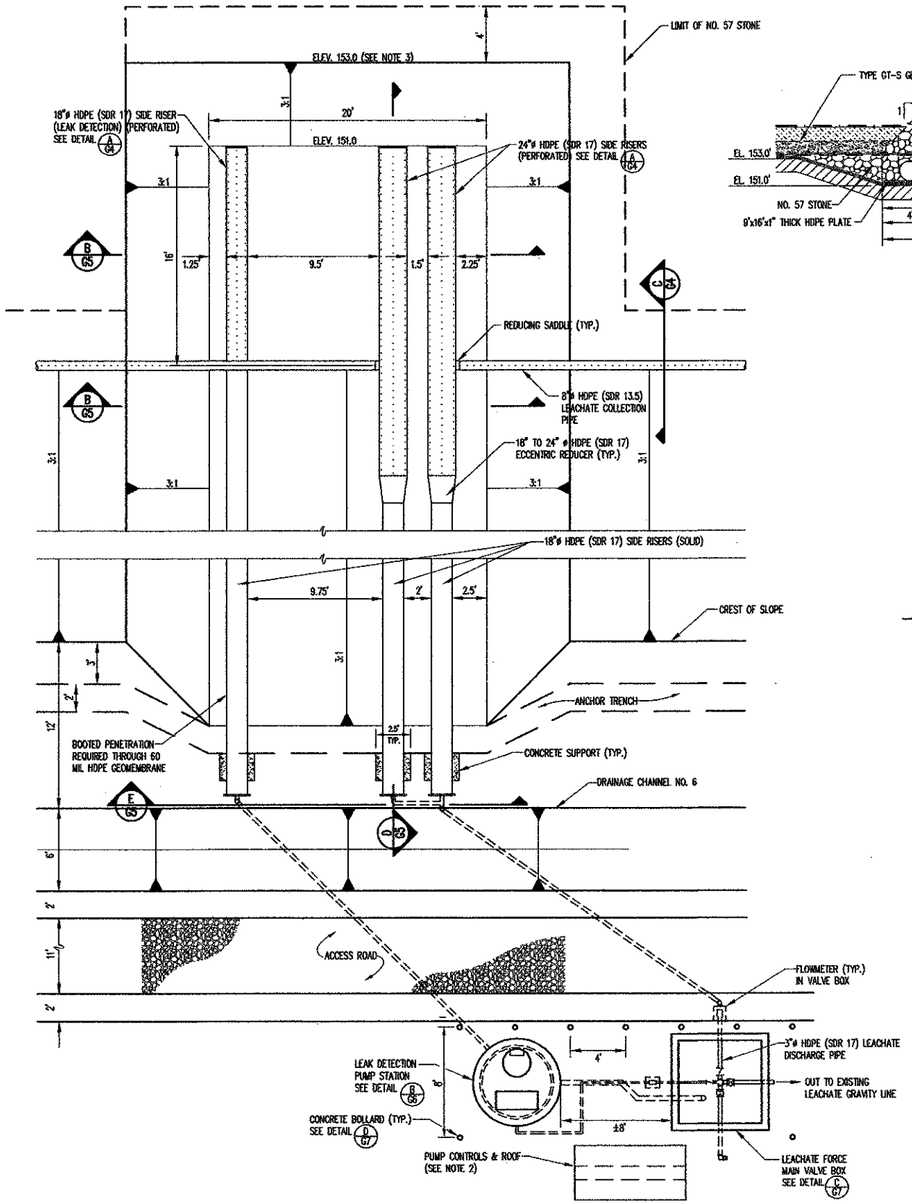

LEACHATE SUMP – PLAN VIEW

DETAIL A / G5

SCALE: 1"=5'

NOTES:

1. LEAK DETECTION PIPING NOT SHOWN FOR CLARITY.
2. SEE DRAWING EL1 FOR ELECTRICAL PLAN AND DETAILS.
3. ELEVATIONS SHOWN REPRESENT TOP OF COMPACTED SOIL LINER.

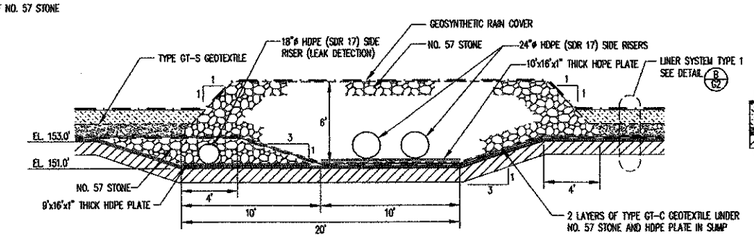

LEACHATE SUMP – TYPICAL CROSS SECTION

DETAIL B / G5

SCALE: 1"=5'

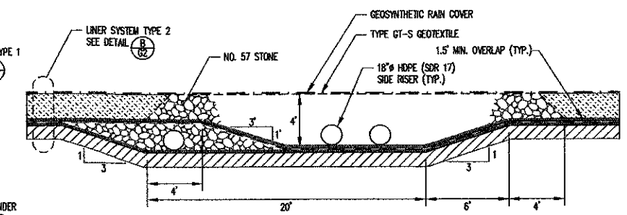

LEACHATE SUMP – TYPICAL CROSS SECTION OF SIDE RISER PIPES ON SLOPE

DETAIL C / G5

SCALE: 1"=5'

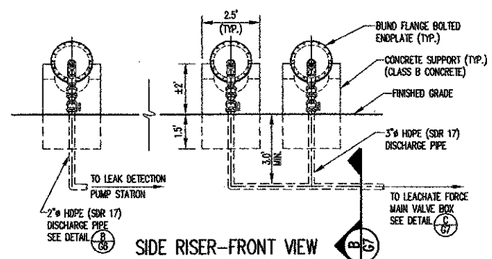

SIDE RISER–FRONT VIEW

DETAIL E / G5

SCALE: 1"= 3'

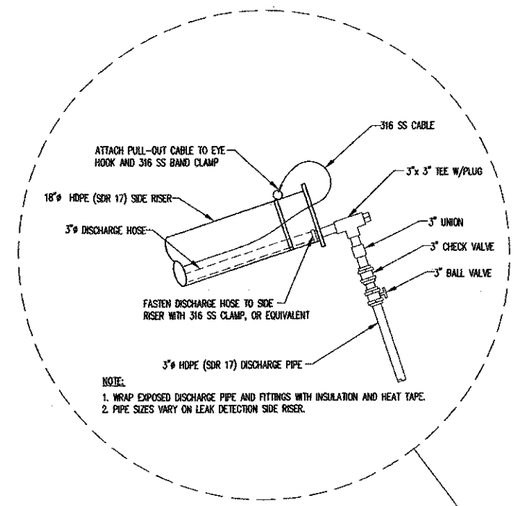

NOTE:

1. WRAP EXPOSED DISCHARGE PIPE AND FITTINGS WITH INSULATION AND HEAT TAPE.
2. PIPE SIZES VARY ON LEAK DETECTION SIDE RISER.

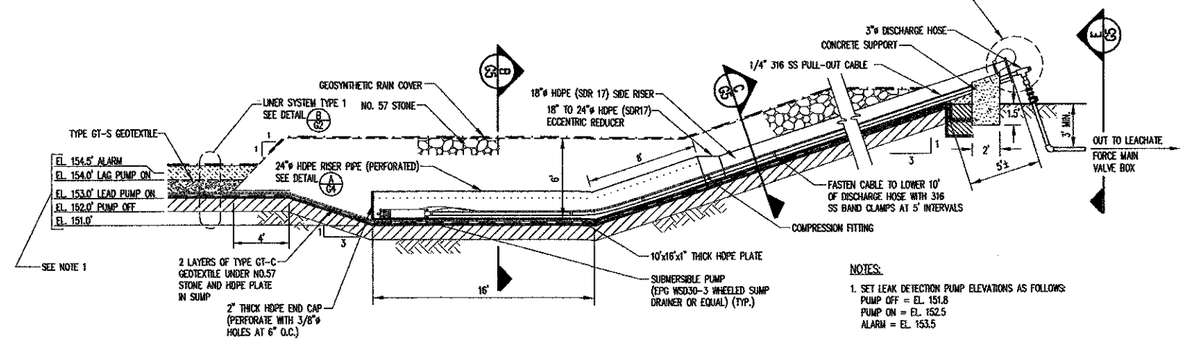

NOTES:

1. SET LEAK DETECTION PUMP ELEVATIONS AS FOLLOWS:
   PUMP OFF = EL. 151.8
   PUMP ON = EL. 152.5
   ALARM = EL. 153.5

LEACHATE SUMP – SECTION THROUGH LEACHATE COLLECTION SIDE RISER

DETAIL D / G5

SCALE: 1"=5'

ISSUED FOR CONSTRUCTION

REVISION	DATE	NO.

G.N. RICHARDSON & ASSOCIATES, INC.
Engineering and Geological Services
425 N. BOYLAN AVENUE RALEIGH, N.C. 27603
PHONE-919-828-0577 FAX-919-828-3899 WWW.GNRA.COM

SEAL: SEAL 021686 ENGINEER PIETER K. SEGO JR. 3/8/02

SEAL: CAROLINA HYDROGEOLOGY, INC. SEAL 8889 HYDROGEOLOGIST GREGORY N. RICHARDSON 3/8/02

PROJECT TITLE: JOHNSTON COUNTY MSW LANDFILL PHASE 4A CELL 1 CONSTRUCTION DRAWINGS

DRAWING TITLE: LEACHATE COLLECTION SYSTEM DETAILS (SHEET 2 OF 2)

DESIGNED BY: P.K.S.	DRAWN BY: C.T.J.
CHECKED BY: G.N.R.	PROJECT NO.: JOHN-14
SCALE: AS SHOWN	DATE: FEB. 2002
FILE NAME: JOHN-D0236	
SHEET NO.: 13	DRAWING NO.: G5

G:\-cad\JOHNSTON\John-14\const-issue\sheets\JOHN-D0236.dwg DATE: MAR 26, 2002 TIME: 2:15 PM

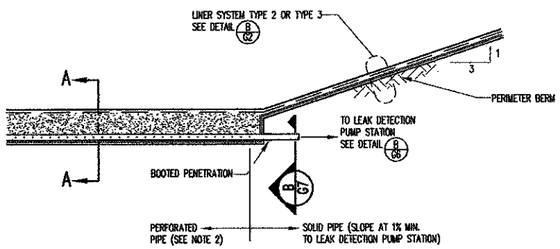

ELEVATION-DOWNSTREAM TERMINATION
SCALE: 1"=4'

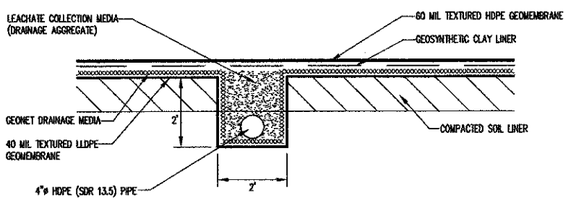

SECTION A-A (TRENCHES NO.1 & NO.2)
SCALE: 1"=2'

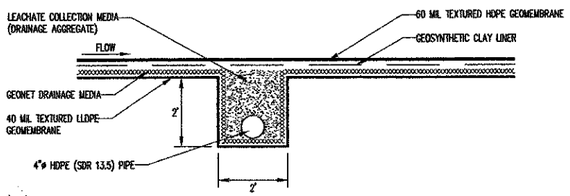

SECTION A-A (TRENCH NO.3)
SCALE: 1"=2'

LEAK DETECTION TRENCH DETAIL A/G6
SCALE: AS SHOWN

NOTE:
1. LAYERS ABOVE UPPER GEOMEMBRANE ARE NOT SHOWN FOR CLARITY.
2. SEE DETAIL A/G6 FOR HDPE PIPE PERFORATIONS.
3. SLIGHTLY ROUNDED CORNERS SHALL BE PROVIDED IN THE LEAK DETECTION TRENCH TO AVOID SHARP BENDS IN THE LLDPE GEOMEMBRANE. THE MINIMUM RADIUS OF CURVATURE FOR THE LLDPE GEOMEMBRANE SHALL BE IN ACCORDANCE WITH THE MANUFACTURERS RECOMMENDATIONS.

ISSUED FOR CONSTRUCTION

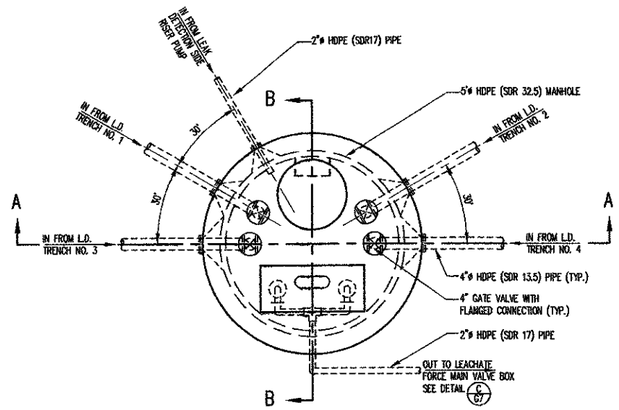

PLAN VIEW

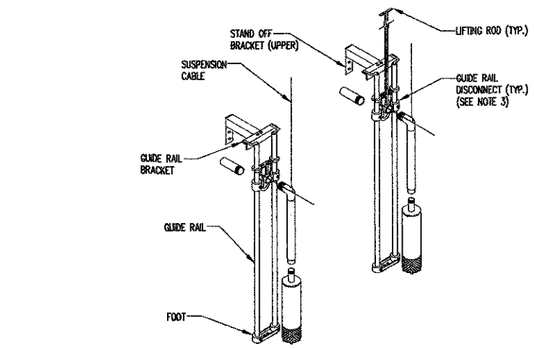

TYPICAL GUIDE RAIL AND BRACKETS
NOT TO SCALE

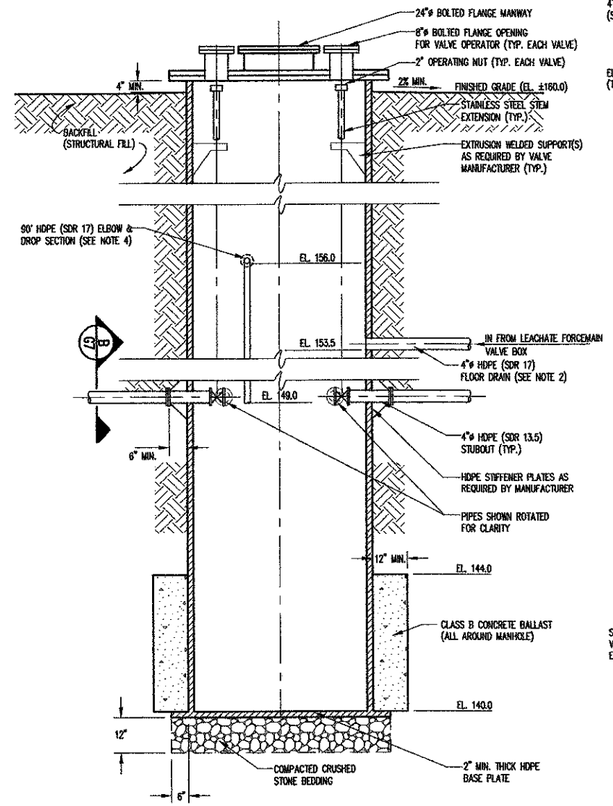

SECTION A-A

LEAK DETECTION PUMP STATION DETAIL B/G6
SCALE 1"=2'-0"

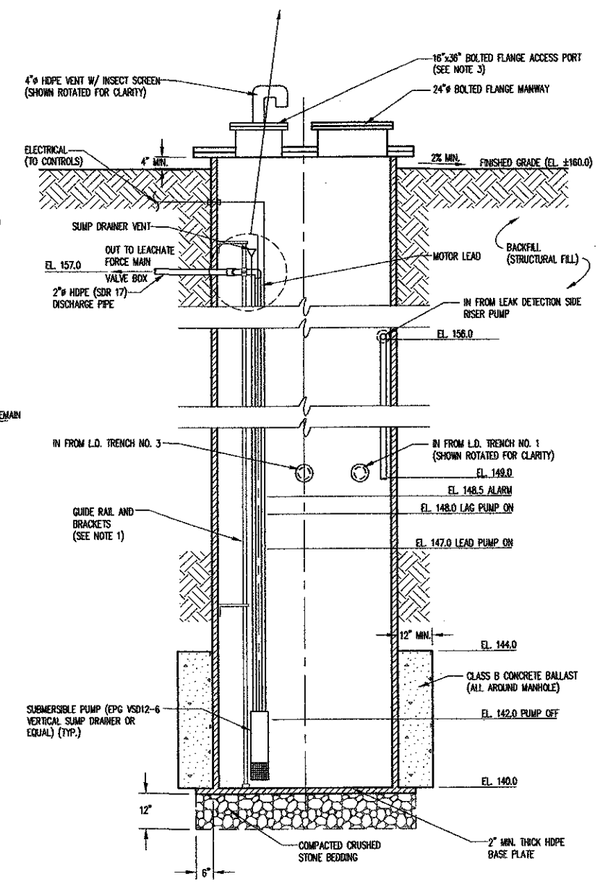

SECTION B-B

NOTES:
1. GUIDE RAIL AND BRACKETS SHALL BE AS RECOMMENDED BY THE PUMP MANUFACTURER.
2. FLOOR DRAIN NOT SHOWN IN PLAN VIEW FOR CLARITY.
3. GUIDE RAIL DISCONNECTS AND ACCESS PORT SHALL BE DESIGNED/POSITIONED SO THAT ENTRY INTO THE MANHOLE IS NOT REQUIRED FOR PUMP REMOVAL.
4. PROVIDE EXTRUSION WELDED SUPPORT(S) AS NECESSARY FOR DROP SECTION.

DATE	NO.	REVISION

G.N. RICHARDSON & ASSOCIATES, INC.
Engineering and Geological Services
425 N. BOYLAN AVENUE RALEIGH, N.C. 27603
PHONE-919-828-0577 FAX-919-828-3899 WWW.GNRA.COM

SEAL: CAROLINA PROFESSIONAL SEAL 027666 ENGINEER PETER K. SOPER 2/26/02

SEAL: CAROLINA PROFESSIONAL SEAL 8885 GEOLOGIST GREGORY N. RICHARDSON 2/26/02

PROJECT TITLE: JOHNSTON COUNTY MSW LANDFILL PHASE 4A CELL 1 CONSTRUCTION DRAWINGS

DRAWING TITLE: LEAK DETECTION SYSTEM DETAILS

DESIGNED BY: P.K.S.	DRAWN BY: C.T.J.
CHECKED BY: G.N.R.	PROJECT NO.: JOHN-14
SCALE: AS SHOWN	DATE: FEB. 2002
FILE NAME: JOHN-D0237	
SHEET NO. 14	DRAWING NO. G6

G:\-cad\JOHNSTON\John-14\const-issue\sheets\JOHN-D0237.dwg DATE: MAR 26, 2002 TIME: 2:17 PM

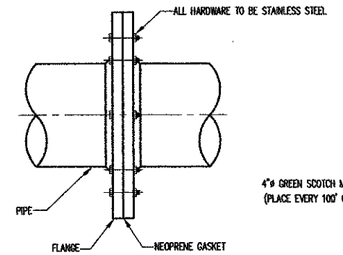

NOTE:
1. FLANGE DIMENSIONS, BOLT SPACING, AND HARDWARE VARY BY PIPE DIAMETER PER ANSI STANDARDS.
2. WHERE ALLOWED BY THE ENGINEER, FLANGED CONNECTIONS MAY BE REPLACED BY BUTT FUSION WELDING.

FLANGED PIPE CONNECTION

DETAIL A / G7
N.T.S

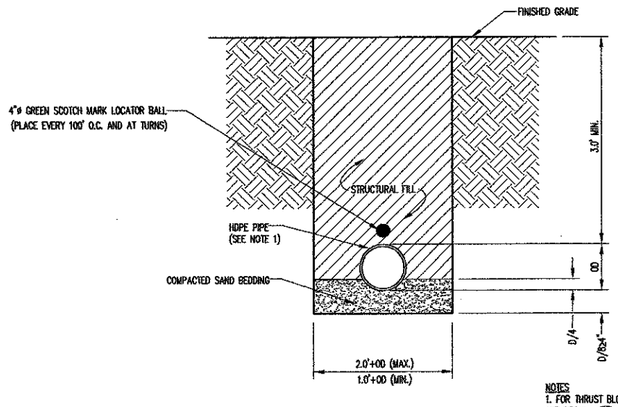

NOTES
1. FOR THRUST BLOCKING OF PRESSURE PIPE, SEE DETAIL E / G7

HDPE PIPE BEDDING

DETAIL B / G7
SCALE: 1"=1'-0"

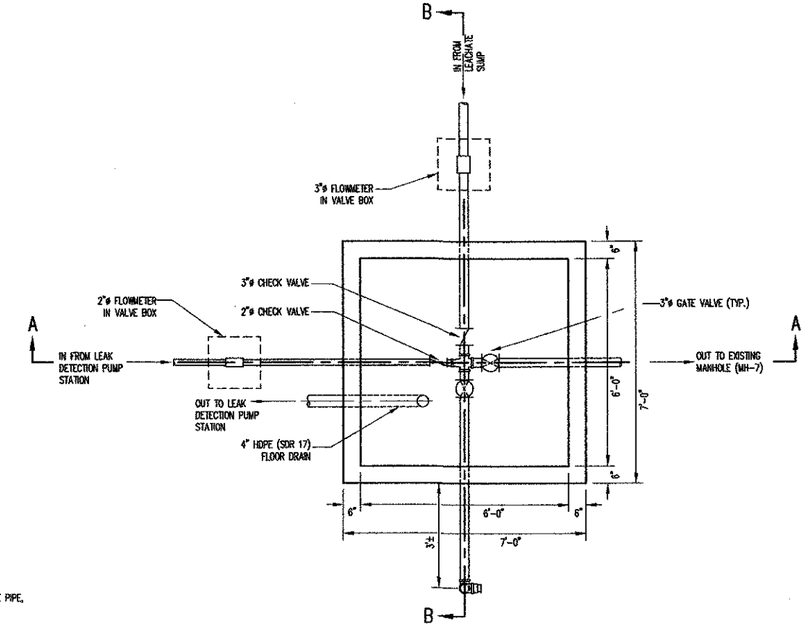

PLAN VIEW

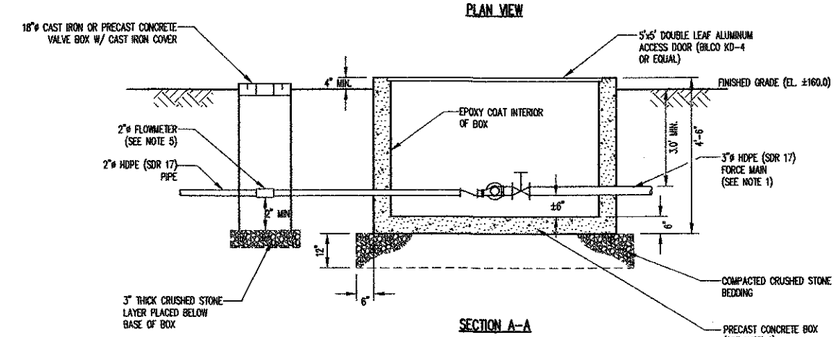

SECTION A-A

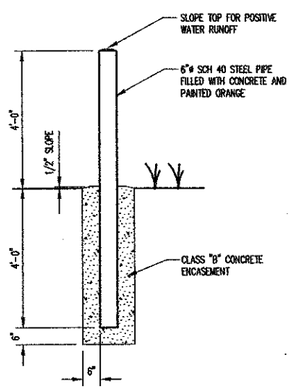

BOLLARD

DETAIL D / G7
NOT TO SCALE

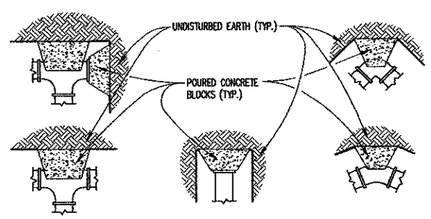

NOTES:
1. THESE DETAILS ARE FOR BOTH VERTICALLY AND HORIZONTALLY LAID PIPE.
2. POURED IN PLACE CONCRETE SHALL BE CLASS B.
3. LEAVE JOINTS CLEAR OF CONCRETE FOR EASY ACCESS.
4. POLYETHYLENE SHALL BE WRAPPED AROUND FITTINGS WHERE CONCRETE BLOCKING WILL EVENTUALLY BE REMOVED.
5. THE CRITICAL CONDITION OF UNDISTURBED EARTH IS ANTICIPATED TO BE SILTY SAND.
6. FITTING FACTORS:
   90° – 1.41
   PLUG – 1.00
   45° – 0.77
   22 1/2° – 0.39
   11 1/4° – 0.20

REQUIRED AREA OF BLOCK FACE EARTH BEARING (B) SHALL BE FIGURED AS FOLLOWS
WHERE:
B = AREA OF BLOCK FACE ($FT.^2$)
A = AREA OF PIPE DIA. IN SQ. IN.
P = DESIGN WORKING PRESS, PSI.
C = FITTING FACTOR
$B = \frac{P \cdot A \cdot C}{2000}$

THRUST BLOCKS

DETAIL E / G7
N.T.S.

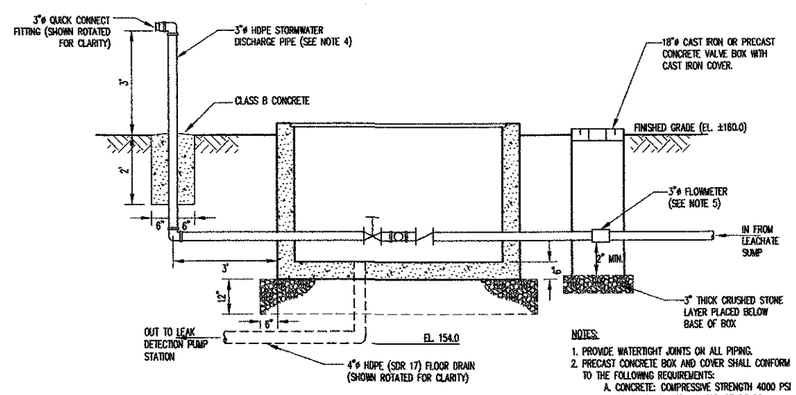

SECTION B-B

NOTES:
1. PROVIDE WATERTIGHT JOINTS ON ALL PIPING.
2. PRECAST CONCRETE BOX AND COVER SHALL CONFORM TO THE FOLLOWING REQUIREMENTS:
   A. CONCRETE: COMPRESSIVE STRENGTH 4000 PSI
   B. REINFORCING: ASTM A-615, GRADE 60
   C. MEETS H-20 LOADING.
3. CONTRACTOR SHALL PROVIDE CONCRETE THRUST BLOCKING AND VALVE SUPPORTS AS REQUIRED.
4. THE STORMWATER DISCHARGE PIPE IS TO BE USED TO DISCHARGE STORMWATER INFILTRATION FROM THE LEACHATE COLLECTION SYSTEM PRIOR TO THE PLACEMENT OF ANY WASTE.
5. FLOWMETER SHALL BE INSTALLED IN PIPE WITH MINIMUM OF 5 PIPE DIAMETERS UNOBSTRUCTED PIPE DOWNSTREAM OF METER AND 10 PIPE DIAMETERS UPSTREAM OF METER.
6. CONTRACTOR SHALL VERIFY THAT THE SELECTED BOX IS ADEQUATELY SIZED TO FIT THE PROPOSED VALVES AND FITTINGS.

LEACHATE FORCEMAIN VALVE BOX

DETAIL C / G7
SCALE: 1"=2'

ISSUED FOR CONSTRUCTION

NO.	DATE	REVISION

G.N. RICHARDSON & ASSOCIATES, INC.
Engineering and Geological Services
425 N. BOYLAN AVENUE RALEIGH, N.C. 27603
PHONE-919-828-0577 FAX-919-828-3899 WWW.GNRA.COM

SEAL: NORTH CAROLINA PROFESSIONAL SEAL 021666 ENGINEER PIETER K. STUDEPO

SEAL: NORTH CAROLINA PROFESSIONAL SEAL 3895 GEOLOGIST GREGORY N. RICHARDSON

PROJECT TITLE: JOHNSTON COUNTY MSW LANDFILL PHASE 4A CELL 1 CONSTRUCTION DRAWINGS

DRAWING TITLE: LEACHATE DISCHARGE PIPING DETAILS

DESIGNED BY: P.K.S.	DRAWN BY: C.T.J.
CHECKED BY: G.N.R.	PROJECT NO.: JOHN-14
SCALE: AS SHOWN	DATE: FEB. 2002
FILE NAME: JOHN-D0238	
SHEET NO. 15	DRAWING NO. G7

G:\-cad\JOHNSTON\John-14\const-issue\sheets\JOHN-D0238.dwg DATE: MAR 28, 2002 TIME: 2:15 PM

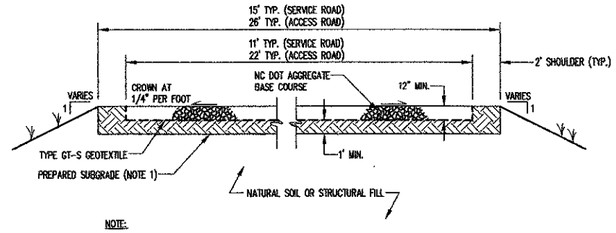

NOTE:

1. IN FILL AREAS, PREPARED SUBGRADE IS EQUIVALENT TO STRUCTURAL FILL. FOR CUT AREAS, REMOVE AND REPLACE WITH STRUCTURAL FILL (SEE PROJECT SPECIFICATIONS).

TYPICAL ROADWAY CROSS SECTION

DETAIL A/R1

SCALE: 1" = 5'

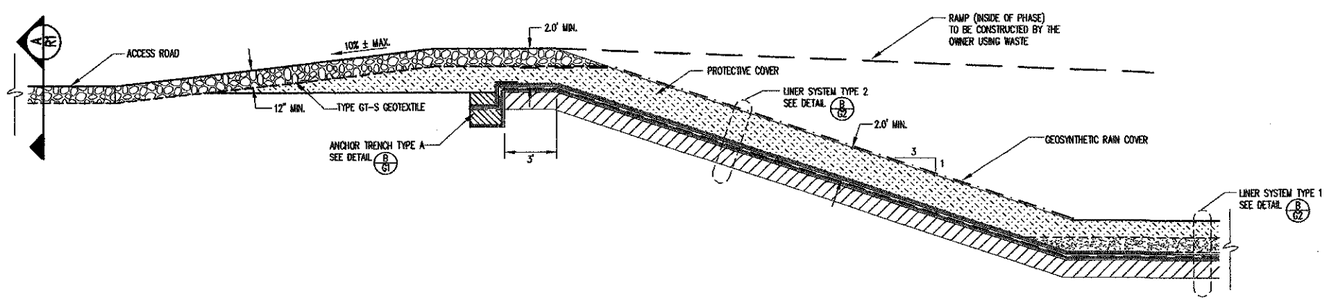

ACCESS RAMP

DETAIL B/R1

SCALE: 1" = 4'

ISSUED FOR CONSTRUCTION

REVISION	DATE	NO.

G.N. RICHARDSON & ASSOCIATES, INC.
Engineering and Geological Services
425 N. BOYLAN AVENUE RALEIGH, N.C. 27603
PHONE-919-828-0577 FAX-919-828-3899 WWW.GNRA.COM

SEAL

SEAL

PROJECT TITLE: JOHNSTON COUNTY MSW LANDFILL PHASE 4A CELL 1 CONSTRUCTION DRAWINGS

DRAWING TITLE: ROADWAY DETAILS

DESIGNED BY: P.K.S.	DRAWN BY: C.T.J.
CHECKED BY: G.N.R.	PROJECT NO.: JOHN-14
SCALE: AS SHOWN	DATE: FEB. 2002
FILE NAME: JOHN-D0239	
SHEET NO. 16	DRAWING NO. R1

G:\-cad\JOHNSTON\John-14\const-base\sheets\JOHN-D0239.dwg DATE: MAR 25, 2002 TIME: 2:21 PM

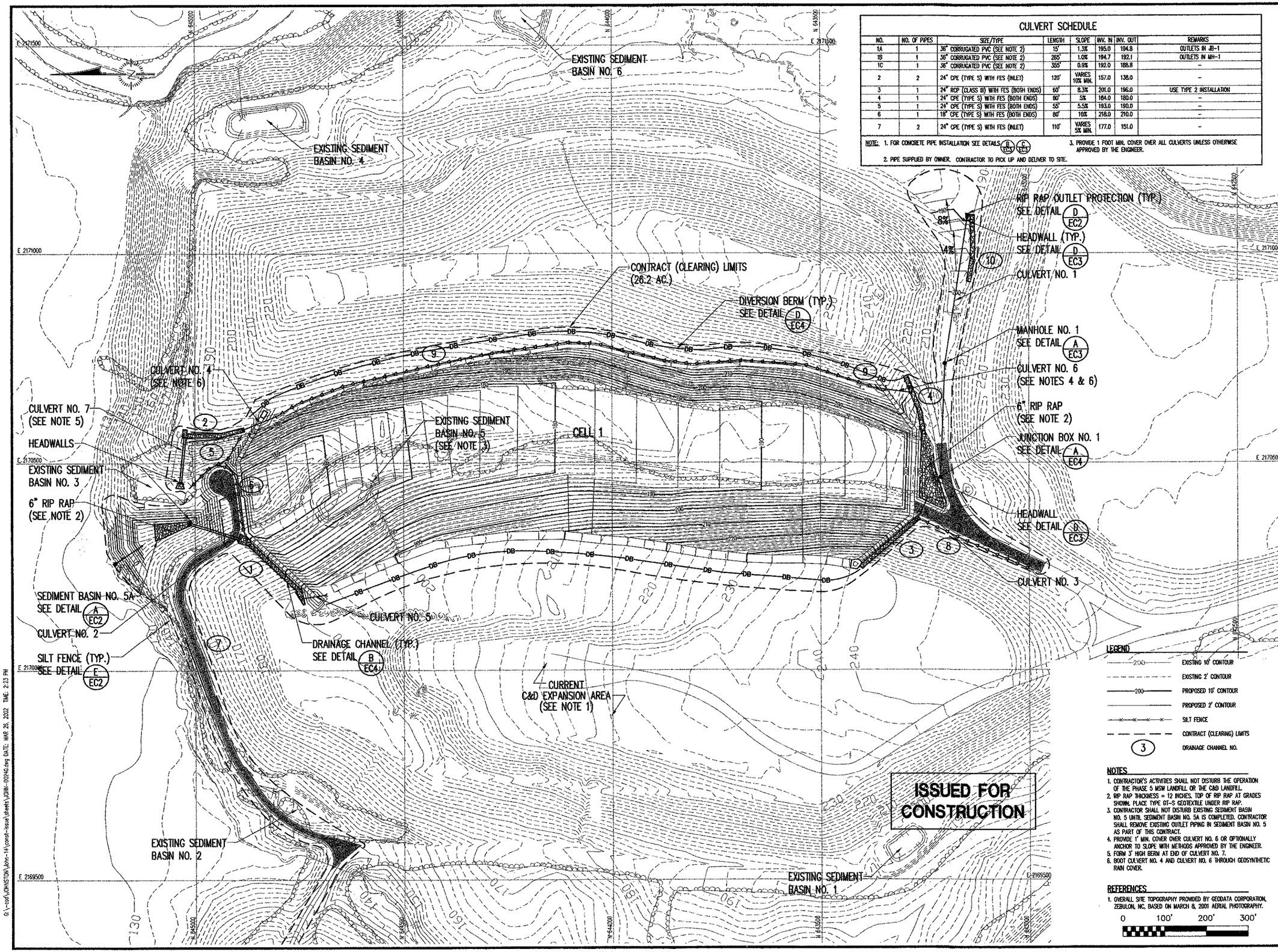
EXISTING SEDIMENT BASIN NO. 6
EXISTING SEDIMENT BASIN NO. 4
CONTRACT (CLEARING) LIMITS (26.2 AC.)
DIVERSION BERM (TYP.) SEE DETAIL D EC4
RIP RAP OUTLET PROTECTION (TYP.) SEE DETAIL D EC2
HEADWALL (TYP.) SEE DETAIL D EC3
CULVERT NO. 1
MANHOLE NO. 1 SEE DETAIL A EC3
CULVERT NO. 6 (SEE NOTES 4 & 6)
6" RIP RAP (SEE NOTE 2)
JUNCTION BOX NO. 1 SEE DETAIL A EC4
HEADWALL SEE DETAIL D EC3
CULVERT NO. 3
CULVERT NO. 4 (SEE NOTE 6)
CULVERT NO. 7 (SEE NOTE 5)
HEADWALLS
EXISTING SEDIMENT BASIN NO. 3
6" RIP RAP (SEE NOTE 2)
EXISTING SEDIMENT BASIN NO. 5 (SEE NOTE 3)
CELL 1
SEDIMENT BASIN NO. 5A SEE DETAIL A EC2
CULVERT NO. 2
SILT FENCE (TYP.) SEE DETAIL E EC2
CULVERT NO. 5
DRAINAGE CHANNEL (TYP.) SEE DETAIL B EC4
CURRENT C&D EXPANSION AREA (SEE NOTE 1)
EXISTING SEDIMENT BASIN NO. 2
EXISTING SEDIMENT BASIN NO. 1
ISSUED FOR CONSTRUCTION
E 2171500
E 2171000
E 2170500
E 2170000
E 2169500
N 645000
N 644500
N 644000
N 643500
N 643000
N 642500
N 642000
N 641500
N 641000
N 640500
N 640000
N 639500
N 639000
N 638500
N 638000
N 637500
N 637000
N 636500
N 636000
N 635500
N 635000
N 634500
N 634000
N 633500
N 633000
N 632500
N 632000
N 631500
N 631000
N 630500
N 630000
N 629500
N 629000
N 628500
N 628000
N 627500
N 627000
N 626500
N 626000
N 625500
N 625000
N 624500
N 624000
N 623500
N 623000
N 622500
N 622000
N 621500
N 621000
N 620500
N 620000
N 619500
N 619000
N 618500
N 618000
N 617500
N 617000
N 616500
N 616000
N 615500
N 615000
N 614500
N 614000
N 613500
N 613000
N 612500
N 612000
N 611500
N 611000
N 610500
N 610000
N 609500
N 609000
N 608500
N 608000
N 607500
N 607000
N 606500
N 606000
N 605500
N 605000
N 604500
N 604000
N 603500
N 603000
N 602500
N 602000
N 601500
N 601000
N 600500
N 600000
N 599500
N 599000
N 598500
N 598000
N 597500
N 597000
N 596500
N 596000
N 595500
N 595000
N 594500
N 594000
N 593500
N 593000
N 592500
N 592000
N 591500
N 591000
N 590500
N 590000
N 589500
N 589000
N 588500
N 588000
N 587500
N 587000
N 586500
N 586000
N 585500
N 585000
N 584500
N 584000
N 583500
N 583000
N 582500
N 582000
N 581500
N 581000
N 580500
N 580000
N 579500
N 579000
N 578500
N 578000
N 577500
N 577000
N 576500
N 576000
N 575500
N 575000
N 574500
N 574000
N 573500
N 573000
N 572500
N 572000
N 571500
N 571000
N 570500
N 570000
N 569500
N 569000
N 568500
N 568000
N 567500
N 567000
N 566500
N 566000
N 565500
N 565000
N 564500
N 564000
N 563500
N 563000
N 562500
N 562000
N 561500
N 561000
N 560500
N 560000
N 559500
N 559000
N 558500
N 558000
N 557500
N 557000
N 556500
N 556000
N 555500
N 555000
N 554500
N 554000
N 553500
N 553000
N 552500
N 552000
N 551500
N 551000
N 550500
N 550000
N 549500
N 549000
N 548500
N 548000
N 547500
N 547000
N 546500
N 546000
N 545500
N 545000
N 544500
N 544000
N 543500
N 543000
N 542500
N 542000
N 541500
N 541000
N 540500
N 540000
N 539500
N 539000
N 538500
N 538000
N 537500
N 537000
N 536500
N 536000
N 535500
N 535000
N 534500
N 534000
N 533500
N 533000
N 532500
N 532000
N 531500
N 531000
N 530500
N 530000
N 529500
N 529000
N 528500
N 528000
N 527500
N 527000
N 526500
N 526000
N 525500
N 525000
N 524500
N 524000
N 523500
N 523000
N 522500
N 522000
N 521500
N 521000
N 520500
N 520000
N 519500
N 519000
N 518500
N 518000
N 517500
N 517000
N 516500
N 516000
N 515500
N 515000
N 514500
N 514000
N 513500
N 513000
N 512500
N 512000
N 511500
N 511000
N 510500
N 510000
N 509500
N 509000
N 508500
N 508000
N 507500
N 507000
N 506500
N 506000
N 505500
N 505000
N 504500
N 504000
N 503500
N 503000
N 502500
N 502000
N 501500
N 501000
N 500500
N 500000
N 499500
N 499000
N 498500
N 498000
N 497500
N 497000
N 496500
N 496000
N 495500
N 495000
N 494500
N 494000
N 493500
N 493000
N 492500
N 492000
N 491500
N 491000
N 490500
N 490000
N 489500
N 489000
N 488500
N 488000
N 487500
N 487000
N 486500
N 486000
N 485500
N 485000
N 484500
N 484000
N 483500
N 483000
N 482500
N 482000
N 481500
N 481000
N 480500
N 480000
N 479500
N 479000
N 478500
N 478000
N 477500
N 477000
N 476500
N 476000
N 475500
N 475000
N 474500
N 474000
N 473500
N 473000
N 472500
N 472000
N 471500
N 471000
N 470500
N 470000
N 469500
N 469000
N 468500
N 468000
N 467500
N 467000
N 466500
N 466000
N 465500
N 465000
N 464500
N 464000
N 463500
N 463000
N 462500
N 462000
N 461500
N 461000
N 460500
N 460000
N 459500
N 459000
N 458500
N 458000
N 457500
N 457000
N 456500
N 456000
N 455500
N 455000
N 454500
N 454000
N 453500
N 453000
N 452500
N 452000
N 451500
N 451000
N 450500
N 450000
N 449500
N 449000
N 448500
N 448000
N 447500
N 447000
N 446500
N 446000
N 445500
N 445000
N 444500
N 444000
N 443500
N 443000
N 442500
N 442000
N 441500
N 441000
N 440500
N 440000
N 439500
N 439000
N 438500
N 438000
N 437500
N 437000
N 436500
N 436000
N 435500
N 435000
N 434500
N 434000
N 433500
N 433000
N 432500
N 432000
N 431500
N 431000
N 430500
N 430000
N 429500
N 429000
N 428500
N 428000
N 427500
N 427000
N 426500
N 426000
N 425500
N 425000
N 424500
N 424000
N 423500
N 423000
N 422500
N 422000
N 421500
N 421000
N 420500
N 420000
N 419500
N 419000
N 418500
N 418000
N 417500
N 417000
N 416500
N 416000
N 415500
N 415000
N 414500
N 414000
N 413500
N 413000
N 412500
N 412000
N 411500
N 411000
N 410500
N 410000
N 409500
N 409000
N 408500
N 408000
N 407500
N 407000
N 406500
N 406000
N 405500
N 405000
N 404500
N 404000
N 403500
N 403000
N 402500
N 402000
N 401500
N 401000
N 400500
N 400000
N 399500
N 399000
N 398500
N 398000
N 397500
N 397000
N 396500
N 396000
N 395500
N 395000
N 394500
N 394000
N 393500
N 393000
N 392500
N 392000
N 391500
N 391000
N 390500
N 390000
N 389500
N 389000
N 388500
N 388000
N 387500
N 387000
N 386500
N 386000
N 385500
N 385000
N 384500
N 384000
N 383500
N 383000
N 382500
N 382000
N 381500
N 381000
N 380500
N 380000
N 379500
N 379000
N 378500
N 378000
N 377500
N 377000
N 376500
N 376000
N 375500
N 375000
N 374500
N 374000
N 373500
N 373000
N 372500
N 372000
N 371500
N 371000
N 370500
N 370000
N 369500
N 369000
N 368500
N 368000
N 367500
N 367000
N 366500
N 366000
N 365500
N 365000
N 364500
N 364000
N 363500
N 363000
N 362500
N 362000
N 361500
N 361000
N 360500
N 360000
N 359500
N 359000
N 358500
N 358000
N 357500
N 357000
N 356500
N 356000
N 355500
N 355000
N 354500
N 354000
N 353500
N 353000
N 352500
N 352000
N 351500
N 351000
N 350500
N 350000
N 349500
N 349000
N 348500
N 348000
N 347500
N 347000
N 346500
N 346000
N 345500
N 345000
N 344500
N 344000
N 343500
N 343000
N 342500
N 342000
N 341500
N 341000
N 340500
N 340000
N 339500
N 339000
N 338500
N 338000
N 337500
N 337000
N 336500
N 336000
N 335500
N 335000
N 334500
N 334000
N 333500
N 333000
N 332500
N 332000
N 331500
N 331000
N 330500
N 330000
N 329500
N 329000
N 328500
N 328000
N 327500
N 327000
N 326500
N 326000
N 325500
N 325000
N 324500
N 324000
N 323500
N 323000
N 322500
N 322000
N 321500
N 321000
N 320500
N 320000
N 319500
N 319000
N 318500
N 318000
N 317500
N 317000
N 316500
N 316000
N 315500
N 315000
N 314500
N 314000
N 313500
N 313000
N 312500
N 312000
N 311500
N 311000
N 310500
N 310000
N 309500
N 309000
N 308500
N 308000
N 307500
N 307000
N 306500
N 306000
N 305500
N 305000
N 304500
N 304000
N 303500
N 303000
N 302500
N 302000
N 301500
N 301000
N 300500
N 300000
N 299500
N 299000
N 298500
N 298000
N 297500
N 297000
N 296500
N 296000
N 295500
N 295000
N 294500
N 294000
N 293500
N 293000
N 292500
N 292000
N 291500
N 291000
N 290500
N 290000
N 289500
N 289000
N 288500
N 288000
N 287500
N 287000
N 286500
N 286000
N 285500
N 285000
N 284500
N 284000
N 283500
N 283000
N 282500
N 282000
N 281500
N 281000
N 280500
N 280000
N 279500
N 279000
N 278500
N 278000
N 277500
N 277000
N 276500
N 276000
N 275500
N 275000
N 274500
N 274000
N 273500
N 273000
N 272500
N 272000
N 271500
N 271000
N 270500
N 270000
N 269500
N 269000
N 268500
N 268000
N 267500
N 267000
N 266500
N 266000
N 265500
N 265000
N 264500
N 264000
N 263500
N 263000
N 262500
N 262000
N 261500
N 261000
N 260500
N 260000
N 259500
N 259000
N 258500
N 258000
N 257500
N 257000
N 256500
N 256000
N 255500
N 255000
N 254500
N 254000
N 253500
N 253000
N 252500
N 252000
N 251500
N 251000
N 250500
N 250000
N 249500
N 249000
N 248500
N 248000
N 247500
N 247000
N 246500
N 246000
N 245500
N 245000
N 244500
N 244000
N 243500
N 243000
N 242500
N 242000
N 241500
N 241000
N 240500
N 240000
N 239500
N 239000
N 238500
N 238000
N 237500
N 237000
N 236500
N 236000
N 235500
N 235000
N 234500
N 234000
N 233500
N 233000
N 232500
N 232000
N 231500
N 231000
N 230500
N 230000
N 229500
N 229000
N 228500
N 228000
N 227500
N 227000
N 226500
N 226000
N 225500
N 225000
N 224500
N 224000
N 223500
N 223000
N 222500
N 222000
N 221500
N 221000
N 220500
N 220000
N 219500
N 219000
N 218500
N 218000
N 217500
N 217000
N 216500
N 216000
N 215500
N 215000
N 214500
N 214000
N 213500
N 213000
N 212500
N 212000
N 211500
N 211000
N 210500
N 210000
N 209500
N 209000
N 208500
N 208000
N 207500
N 207000
N 206500
N 206000
N 205500
N 205000
N 204500
N 204000
N 203500
N 203000
N 202500
N 202000
N 201500
N 201000
N 200500
N 200000
N 199500
N 199000
N 198500
N 198000
N 197500
N 197000
N 196500
N 196000
N 195500
N 195000
N 194500
N 194000
N 193500
N 193000
N 192500
N 192000
N 191500
N 191000
N 190500
N 190000
N 189500
N 189000
N 188500
N 188000
N 187500
N 187000
N 186500
N 186000
N 185500
N 185000
N 184500
N 184000
N 183500
N 183000
N 182500
N 182000
N 181500
N 181000
N 180500
N 180000
N 179500
N 179000
N 178500
N 178000
N 177500
N 177000
N 176500
N 176000
N 175500
N 175000
N 174500
N 174000
N 173500
N 173000
N 172500
N 172000
N 171500
N 171000
N 170500
N 170000
N 169500
N 169000
N 168500
N 168000
N 167500
N 167000
N 166500
N 166000
N 165500
N 165000
N 164500
N 164000
N 163500
N 163000
N 162500
N 162000
N 161500
N 161000
N 160500
N 160000
N 159500
N 159000
N 158500
N 158000
N 157500
N 157000
N 156500
N 156000
N 155500
N 155000
N 154500
N 154000
N 153500
N 153000
N 152500
N 152000
N 151500
N 151000
N 150500
N 150000
N 149500
N 149000
N 148500
N 148000
N 147500
N 147000
N 146500
N 146000
N 145500
N 145000
N 144500
N 144000
N 143500
N 143000
N 142500
N 142000
N 141500
N 141000
N 140500
N 140000
N 139500
N 139000
N 138500
N 138000
N 137500
N 137000
N 136500
N 136000
N 135500
N 135000
N 134500
N 134000
N 133500
N 133000
N 132500
N 132000
N 131500
N 131000
N 130500
N 130000
N 129500
N 129000
N 128500
N 128000
N 127500
N 127000
N 126500
N 126000
N 125500
N 125000
N 124500
N 124000
N 123500
N 123000
N 122500
N 122000
N 121500
N 121000
N 120500
N 120000
N 119500
N 119000
N 118500
N 118000
N 117500
N 117000
N 116500
N 116000
N 115500
N 115000
N 114500
N 114000
N 113500
N 113000
N 112500
N 112000
N 111500
N 111000
N 110500
N 110000
N 109500
N 109000
N 108500
N 108000
N 107500
N 107000
N 106500
N 106000
N 105500
N 105000
N 104500
N 104000
N 103500
N 103000
N 102500
N 102000
N 101500
N 101000
N 100500
N 100000
N 99500
N 99000
N 98500
N 98000
N 97500
N 97000
N 96500
N 96000
N 95500
N 95000
N 94500
N 94000
N 93500
N 93000
N 92500
N 92000
N 91500
N 91000
N 90500
N 90000
N 89500
N 89000
N 88500
N 88000
N 87500
N 87000
N 86500
N 86000
N 85500
N 85000
N 84500
N 84000
N 83500
N 83000
N 82500
N 82000
N 81500
N 81000
N 80500
N 80000
N 79500
N 79000
N 78500
N 78000
N 77500
N 77000
N 76500
N 76000
N 75500
N 75000
N 74500
N 74000
N 73500
N 73000
N 72500
N 72000
N 71500
N 71000
N 70500
N 70000
N 69500
N 69000
N 68500
N 68000
N 67500
N 67000
N 66500
N 66000
N 65500
N 65000
N 64500
N 64000
N 63500
N 63000
N 62500
N 62000
N 61500
N 61000
N 60500
N 60000
N 59500
N 59000
N 58500
N 58000
N 57500
N 57000
N 56500
N 56000
N 55500
N 55000
N 54500
N 54000
N 53500
N 53000
N 52500
N 52000
N 51500
N 51000
N 50500
N 50000
N 49500
N 49000
N 48500
N 48000
N 47500
N 47000
N 46500
N 46000
N 45500
N 45000
N 44500
N 44000
N 43500
N 43000
N 42500
N 42000
N 41500
N 41000
N 40500
N 40000
N 39500
N 39000
N 38500
N 38000
N 37500
N 37000
N 36500
N 36000
N 35500
N 35000
N 34500
N 34000
N 33500
N 33000
N 32500
N 32000
N 31500
N 31000
N 30500
N 30000
N 29500
N 29000
N 28500
N 28000
N 27500
N 27000
N 26500
N 26000
N 25500
N 25000
N 24500
N 24000
N 23500
N 23000
N 22500
N 22000
N 21500
N 21000
N 20500
N 20000
N 19500
N 19000
N 18500
N 18000
N 17500
N 17000
N 16500
N 16000
N 15500
N 15000
N 14500
N 14000
N 13500
N 13000
N 12500
N 12000
N 11500
N 11000
N 10500
N 10000
N 9500
N 9000
N 8500
N 8000
N 7500
N 7000
N 6500
N 6000
N 5500
N 5000
N 4500
N 4000
N 3500
N 3000
N 2500
N 2000
N 1500
N 1000
N 500
N 0
E 2171500
E 2171000
E 2170500
E 2170000
E 2169500
E 2169000
E 2168500
E 2168000
E 2167500
E 2167000
E 2166500
E 2166000
E 2165500
E 2165000
E 2164500
E 2164000
E 2163500
E 2163000
E 2162500
E 2162000
E

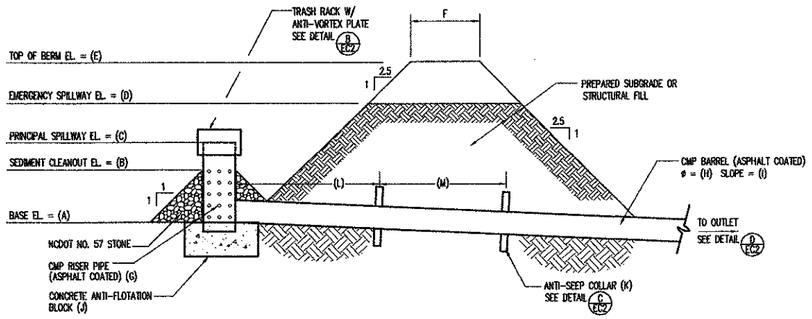

BASIN #	A	B	C	D	E	F	G	H	I	J	K	L	M
5A	136.0'	140.5'	143.0'	144.0'	146.0'	10'	48"	24"	3.0%	6' x 6' x 2.0' THICK	5.8' x 5.8'	10'	30'

NOTE:

1. CMP RISER IS PERFORATED WITH 1/2" DIAMETER HOLES ON 4" CENTERS FROM BASE TO CLEANOUT ELEVATION.

TYPICAL SEDIMENT BASIN CROSS-SECTION

DETAIL A/EC2
N.T.S.

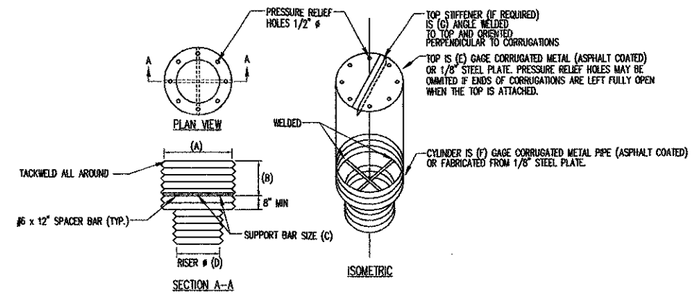

BASIN #	A	B	C	D	E	F	G
5A	72"	21"	1 1/4" PIPE OR 1 1/4 x 1 1/4 x 1/4 ANGLE	48"	14	16	NOT REQUIRED

NOTES:

1. THE CYLINDER MUST BE FIRMLY FASTENED TO THE TOP OF THE RISER.
2. SUPPORT BARS ARE WELDED TO THE TOP OF THE RISER OR ATTACHED BY STRAPS BOLTED TO THE TOP OF THE RISER.

TRASH RACK W/ ANTI-VORTEX PLATE

DETAIL B/EC2
N.T.S.

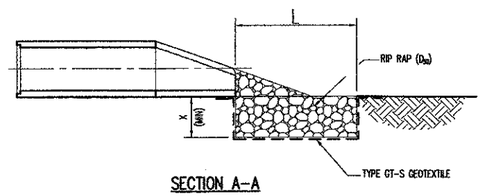

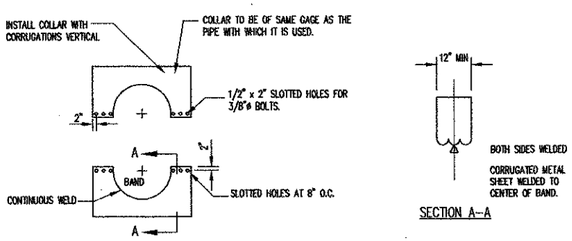

ELEVATION OF UNASSEMBLED COLLAR

NOTES:

1. ALL MATERIAL TO BE IN ACCORDANCE WITH PROJECT SPECIFICATIONS.
2. ALL COLLARS ARE TO BE ASPHALT COATED.
3. UNASSEMBLED COLLARS SHALL BE MARKED BY PAINTING OR TAGGING TO IDENTIFY MATCHING PAIRS.
4. THE LAP BETWEEN THE TWO HALF SECTIONS AND BETWEEN THE PIPE AND CONNECTING BAND SHALL BE CAULKED WITH ASPHALT MASTIC AT TIME OF INSTALLATION.
5. EACH COLLAR SHALL BE FURNISHED WITH TWO 1/2"ø RODS WITH STANDARD TANK LUGS FOR CONNECTING COLLARS TO PIPE

CORRUGATED METAL ANTI-SEEP COLLAR

DETAIL C/EC2
N.T.S.

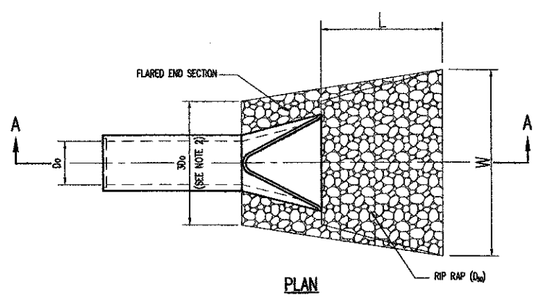

RIP RAP OUTLET PROTECTION (OUTLET TO FLAT AREA)

DETAIL D/EC2
N.T.S.

NOTE:

1. D_{50} REFERS TO THE MINIMUM REQUIRED AVERAGE STONE SIZE
2. FOR MORE THAN ONE PIPE, EXTEND RIP RAP 1.0' MIN. BEYOND OUTSIDE EDGES OF PIPES.

RIP RAP OUTLET PROTECTION SCHEDULE					
PIPE	D_0	L	W	X	D_{50}
SED. BASIN NO. 5A	24"	17'	19'	1.0'	6"
CULVERT NO. 1	36"	20'	23'	1.0'	6"
CULVERT NO. 7	2 X 24"	14'	16'	1.0'	6"

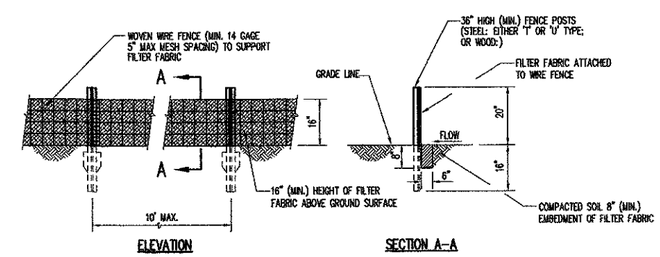

SILT FENCE

DETAIL E/EC2
N.T.S.

ISSUED FOR CONSTRUCTION

REVISION	DATE	NO.

G.N. RICHARDSON & ASSOCIATES, INC.
Engineering and Geological Services
425 N. BOYLAN AVENUE RALEIGH, N.C. 27603
PHONE-919-828-0577 FAX-919-828-3899 WWW.GNRA.COM

SEAL: NORTH CAROLINA PROFESSIONAL SEAL 021656 ENGINEER PIETER K. SEDS 3/26/02

SEAL: NORTH CAROLINA PROFESSIONAL SEAL 8895 ENGINEER GREGORY N. RICHARDSON 3/26/02

PROJECT TITLE: JOHNSTON COUNTY MSW LANDFILL PHASE 4A CELL 1 CONSTRUCTION DRAWINGS

DRAWING TITLE: EROSION AND SEDIMENTATION CONTROL DETAILS (SHEET 1 OF 4)

DESIGNED BY: P.K.S.	DRAWN BY: C.T.J.
CHECKED BY: G.N.R.	PROJECT NO.: JOHN-14
SCALE: AS SHOWN	DATE: FEB. 2002
FILE NAME: JOHN-D0195	
SHEET NO.: 18	DRAWING NO.: EC2

G:\-cad\JOHNSTON\John-14\const-issue\sheets\JOHN-D0241.dwg DATE: MAR 26, 2002 TIME: 2:24 PM

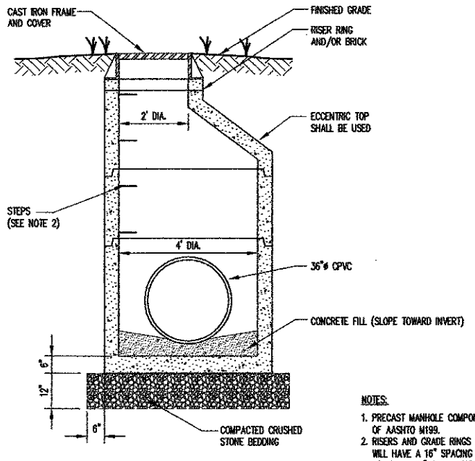

NOTES:

1. PRECAST MANHOLE COMPONENTS SHALL MEET REQUIREMENTS OF AASHTO M199.
2. RISERS AND GRADE RINGS SHALL BE ASSEMBLED SO ALL STEPS WILL HAVE A 16" SPACING THE FULL HEIGHT OF MANHOLE. START FIRST STEP 5" BELOW TOP.
3. WHERE MANHOLE TOP COULD BE SUBJECT TO VEHICULAR TRAFFIC THE TOP SHALL BE FLUSH WITH FINISH SURFACE, OTHERWISE THE MANHOLE TOP SHALL BE A MINIMUM OF 9" ABOVE GROUND.

PRECAST CONCRETE MANHOLE

DETAIL A / EC3
N.T.S.

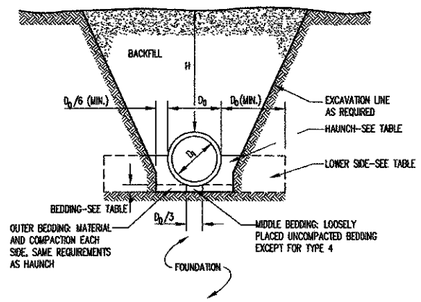

STANDARD TRENCH INSTALLATIONS FOR CONCRETE PIPE
(BASED ON AMERICAN CONCRETE PIPE ASSOCIATION RECOMMENDATIONS)

DETAIL B / EC3
N.T.S.

STANDARD TRENCH INSTALLATION SOILS AND MINIMUM COMPACTION REQUIREMENTS

INSTALLATION TYPE	BEDDING THICKNESS	HAUNCH AND OUTER BEDDING	LOWER SIDE
TYPE 1	D_B/24"(600mm) MINIMUM, NOT LESS THAN 3"(75mm). IF ROCK FOUNDATION, USE D_B/12"(300mm) MINIMUM, NOT LESS THAN 6"(150mm).	95% SW, SP, GW, GP	90% SW, SP, GW, GP; 95% ML, SM, GM OR GC, SC WITH <20% PASSING NO.200 SIEVE; 100% CL, MH, SC, GC, CH; OR NATURAL SOILS OF EQUAL FIRMNESS
TYPE 2	D_B/24"(600mm) MINIMUM, NOT LESS THAN 3"(75mm). IF ROCK FOUNDATION, USE D_B/12"(300mm) MINIMUM, NOT LESS THAN 6"(150mm).	90% SW, SP, GW, GP; OR 95% ML, SM, GM OR GC, SC WITH <20% PASSING NO.200 SIEVE	85% SW, SP, GW, GP; 90% ML, SM, GM OR GC, SC WITH <20% PASSING NO.200 SIEVE; 95% CL, MH, SC, GC, CH; OR NATURAL SOILS OF EQUAL FIRMNESS
TYPE 3	D_B/24"(600mm) MINIMUM, NOT LESS THAN 3"(75mm). IF ROCK FOUNDATION, USE D_B/12"(300mm) MINIMUM, NOT LESS THAN 6"(150mm).	85% SW, SP, GW, GP; 90% ML, SM, GM OR GC, SC WITH <20% PASSING NO.200 SIEVE; OR 95% CL, MH, SC, GC, CH	85% SW, SP, GW, GP; 90% ML, SM, GM OR GC, SC WITH <20% PASSING NO.200 SIEVE; 95% CL, MH, SC, GC, CH; OR NATURAL SOILS OF EQUAL FIRMNESS
TYPE 4	NO BEDDING REQUIRED, EXCEPT IF ROCK FOUNDATION, USE D_B/12"(300mm) MINIMUM, NOT LESS THAN 6"(150mm).	NO COMPACTION REQUIRED, EXCEPT IF CL, MH, SC, GC, CH USE 85%	85% SW, SP, GW, GP; 90% ML, SM, GM OR GC, SC WITH <20% PASSING NO.200 SIEVE; 95% CL, MH, SC, GC, CH; OR NATURAL SOILS OF EQUAL FIRMNESS

NOTES:

1. COMPACTION AND SOIL SYMBOLS (95% SW) REFER TO SW SOIL MATERIAL (USCS CLASSIFICATION) WITH MINIMUM STANDARD PROCTOR COMPACTION (ASTM D 698) OF 95%.
2. THE TRENCH TOP ELEVATION SHALL BE NO LOWER THAN 0.1H BELOW FINISHED GRADE OR, FOR ROADWAYS, ITS TOP SHALL BE NO LOWER THAN AN ELEVATION OF 1'(0.3m) BELOW THE BOTTOM OF THE PAVEMENT BASE MATERIAL.
3. SOIL IN BEDDING AND HAUNCH ZONES SHALL BE COMPACTED TO AT LEAST THE SAME COMPACTION AS SPECIFIED FOR THE MAJORITY OF SOIL IN THE BACKFILL ZONE.
4. THE TRENCH WIDTH SHALL BE WIDER THAN SHOWN IF REQUIRED FOR ADEQUATE SPACE TO ATTAIN THE SPECIFIED COMPACTION IN THE HAUNCH AND BEDDING ZONES.
5. FOR TRENCH WALLS THAT ARE WITHIN 10 DEGREES OF VERTICAL, THE COMPACTION OR FIRMNESS OF THE SOIL IN THE TRENCH WALLS AND LOWER SIDE ZONE NEED NOT BE CONSIDERED.
6. FOR TRENCH WALLS WITH GREATER THAN 10 DEGREE SLOPES THAT CONSIST OF EMBANKMENT, THE LOWER SIDE SHALL BE COMPACTED TO AT LEAST THE SAME COMPACTION AS SPECIFIED FOR THE SOIL IN THE BACKFILL ZONE.

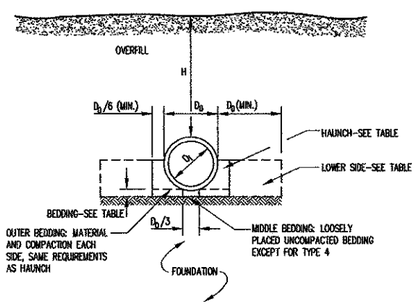

STANDARD EMBANKMENT INSTALLATIONS FOR CONCRETE PIPE
(BASED ON AMERICAN CONCRETE PIPE ASSOCIATION RECOMMENDATIONS)

DETAIL C / EC3
N.T.S.

STANDARD EMBANKMENT INSTALLATION SOILS AND MINIMUM COMPACTION REQUIREMENTS

INSTALLATION TYPE	BEDDING THICKNESS	HAUNCH AND OUTER BEDDING	LOWER SIDE
TYPE 1	D_B/24"(600mm) MINIMUM, NOT LESS THAN 3"(75mm). IF ROCK FOUNDATION, USE D_B/12"(300mm) MINIMUM, NOT LESS THAN 6"(150mm).	95% SW, SP, GW, GP	90% SW, SP, GW, GP; 95% ML, SM, GM OR GC, SC WITH <20% PASSING NO.200 SIEVE; OR 100% CL, MH, SC, GC, CH.
TYPE 2	D_B/24"(600mm) MINIMUM, NOT LESS THAN 3"(75mm). IF ROCK FOUNDATION, USE D_B/12"(300mm) MINIMUM, NOT LESS THAN 6"(150mm).	90% SW, SP, GW, GP; OR 95% ML, SM, GM OR GC, SC WITH <20% PASSING NO.200 SIEVE	85% SW, SP, GW, GP; 90% ML, SM, GM OR GC, SC WITH <20% PASSING NO.200 SIEVE; OR 95% CL, MH, SC, GC, CH.
TYPE 3	D_B/24"(600mm) MINIMUM, NOT LESS THAN 3"(75mm). IF ROCK FOUNDATION, USE D_B/12"(300mm) MINIMUM, NOT LESS THAN 6"(150mm).	85% SW, SP, GW, GP; 90% ML, SM, GM OR GC, SC WITH <20% PASSING NO.200 SIEVE; OR 95% CL, MH, SC, GC, CH	85% SW, SP, GW, GP; 90% ML, SM, GM OR GC, SC WITH <20% PASSING NO.200 SIEVE; OR 95% CL, MH, SC, GC, CH.
TYPE 4	NO BEDDING REQUIRED, EXCEPT IF ROCK FOUNDATION, USE D_B/12"(300mm) MINIMUM, NOT LESS THAN 6"(150mm).	NO COMPACTION REQUIRED, EXCEPT IF CL, MH, SC, GC, CH USE 85%	NO COMPACTION REQUIRED, EXCEPT IF CL, MH, SC, GC, CH USE 85%

NOTES:

1. COMPACTION AND SOIL SYMBOLS (95% SW) REFER TO SW SOIL MATERIAL (USCS CLASSIFICATION) WITH A MINIMUM STANDARD PROCTOR COMPACTION (ASTM D 698) OF 95%.
2. SOIL IN THE OUTER BEDDING, HAUNCH, AND LOWER SIDE ZONES, EXCEPT WITHIN D_B/3 FROM THE PIPE SPRINGLINE, SHALL BE COMPACTED TO AT LEAST THE SAME COMPACTION AS THE MAJORITY OF THE SOIL IN THE OVERFILL ZONE.
3. SUBTRENCHES:
   - 3.1 A SUBTRENCH IS DEFINED AS A TRENCH WITH ITS TOP BELOW FINISHED GRADE BY MORE THAN 0.1H OR, FOR ROADWAYS, ITS TOP IS AT AN ELEVATION LOWER THAN 1'(0.3m) BELOW THE BOTTOM OF THE PAVEMENT BASE MATERIAL.
   - 3.2 THE MINIMUM WIDTH OF A SUBTRENCH SHALL BE 1.33 D_B, OR WIDER IF REQUIRED FOR ADEQUATE SPACE TO ATTAIN THE SPECIFIED COMPACTION IN THE HAUNCH AND BEDDING ZONES.
   - 3.3 FOR SUBTRENCHES WITH WALLS OF NATURAL SOIL, ANY PORTION OF THE LOWER SIDE ZONE IN THE SUBTRENCH WALL SHALL BE AT LEAST AS FIRM AS AN EQUIVALENT SOIL PLACED TO THE COMPACTION REQUIREMENTS SPECIFIED FOR THE LOWER SIDE ZONE AND AS FIRM AS THE MAJORITY IF THE SOIL IN THE OVERFILL ZONE, OR SHALL BE REMOVED AND REPLACED WITH SOIL COMPACTED TO THE SPECIFIED LEVEL.

ISSUED FOR CONSTRUCTION

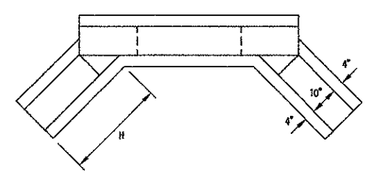

CONCRETE HEADWALL SCHEDULE

A	B	C	D	E	F	G	H
12"	1'-8"	4'-0"	2'-6"	1'-8"	1'-2"	1'-3"	1'-7"
15"	2'-0"	4'-4"	2'-10"	2'-0"	1'-3"	1'-3"	1'-7"
18"	2'-4"	4'-8"	3'-2"	2'-4"	1'-4"	1'-3"	1'-7"
24"	2'-10"	5'-2"	3'-8"	2'-10"	1'-5"	1'-4"	2'-1"
30"	3'-6"	5'-10"	4'-4"	3'-6"	1'-9"	1'-6"	2'-5"
36"	4'-0"	6'-4"	4'-10"	4'-0"	2'-0"	1'-8"	2'-11"
42"	4'-6"	6'-10"	5'-4"	4'-6"	2'-3"	2'-0"	3'-6"
48"	5'-2"	7'-6"	6'-0"	5'-2"	2'-6"	2'-0"	4'-0"
54"	5'-9"	8'-1"	6'-7"	5'-9"	2'-9"	2'-0"	4'-6"
60"	6'-4"	8'-8"	7'-2"	6'-4"	3'-0"	2'-2"	5'-0"

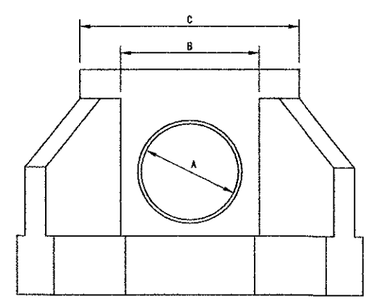

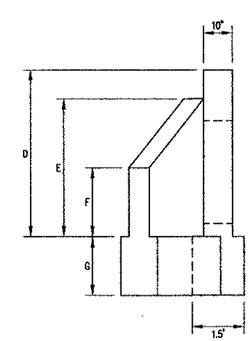

CONCRETE HEADWALL

DETAIL D / EC3
SCALE: 1"=2'

NOTES:

1. PRECAST CONSTRUCTION SHALL MEET THE REQUIREMENTS OF THE NC D.O.T. AND ASTM C-478.
2. REINFORCING STEEL SHALL BE A MINIMUM OF #4 @ 6 O.C.E.W.
3. FOR TWIN PIPES, DOUBLE DIMENSIONS "B" AND "C".

DATE	NO.	REVISION

G.N. RICHARDSON & ASSOCIATES, INC.
Engineering and Geological Services
426 N. BOYLAN AVENUE RALEIGH, N.C. 27603
PHONE-919-828-0577 FAX-919-828-3899 WWW.GNRA.COM

SEAL: NORTH CAROLINA PROFESSIONAL SEAL 021666 ENGINEER PETER K. SO

SEAL: NORTH CAROLINA PROFESSIONAL SEAL 8895 GEOLOGIST GREGORY N. RICHARDSON

PROJECT TITLE: JOHNSTON COUNTY MSW LANDFILL PHASE 4A CELL 1 CONSTRUCTION DRAWINGS

DRAWING TITLE: EROSION AND SEDEMENTATION CONTROL DETAILS (SHEET 2 OF 4)

DESIGNED BY: P.K.S.	DRAWN BY: C.T.J.
CHECKED BY: G.N.R.	PROJECT NO.: JOHN-14
SCALE: AS SHOWN	DATE: FEB. 2002
FILE NAME: JOHN-D0242	
SHEET NO.: 19	DRAWING NO.: EC3

G:\-cad\JOHNSTON\John-14\const-issue\sheets\JOHN-D0242.dwg DATE: MAR 26, 2002 TIME: 2:28 PM

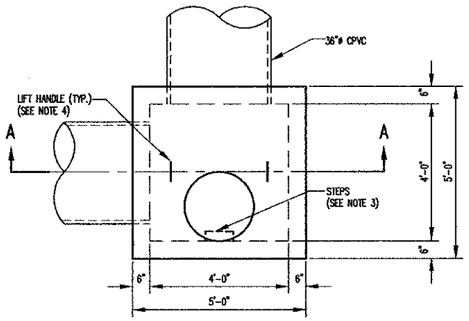

PLAN

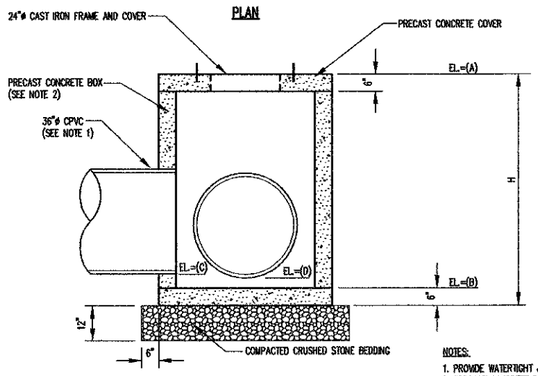

SECTION A-A

JUNCTION BOX SCHEDULE					
JUNCTION BOX	A	B	C	D	H
1	201.0'	194.5'	194.8'	194.7'	7'

JUNCTION BOX
DETAIL A / EC4
SCALE 1"=2'

NOTES:
1. PROVIDE WATERTIGHT JOINTS ON ALL PIPING.
2. PRECAST CONCRETE BOX AND COVER SHALL CONFORM TO THE FOLLOWING REQUIREMENTS:
   A. CONCRETE: COMPRESSIVE STRENGTH 4000 PSI
   B. REINFORCING: ASTM A-615, GRADE 60
   C. MEETS H-20 LOADING.
3. PROVIDE STEPS FOR JUNCTION BOXES WITH H>4.5'. STEPS SHALL HAVE A 16" SPACING THE FULL HEIGHT OF THE JUNCTION BOX. START FIRST STEP 6" BELOW TOP.
4. LIFT HANDLES SHALL BE AS RECOMMENDED BY THE JUNCTION BOX MANUFACTURER.

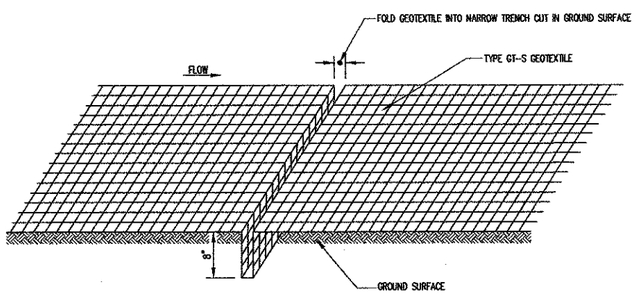

EROSION STOP DETAIL
DETAIL C / EC4
N.T.S.

DRAINAGE CHANNEL SCHEDULE						
DRAINAGE CHANNEL NO.	LINING	B	D	M	D_{50}	X
1	RIP RAP	9.0'	1.5'	3	12"	2.0'
2	RIP RAP	6.0'	1.5'	3	12"	2.0'
3	RIP RAP	4.0'	1.5'	3	12"	2.0'
4	RIP RAP	4.0'	1.5'	3	12"	2.0'
5	TRM*	3.0'	1.5'	2	–	–
6	TRM*	0	VARIES (1.0' MIN.)	2	–	–
7	TRM*	0	1.5'	2	–	–
8	TRM*	0	1.0'	2	–	–
9	SEE DETAIL A / B2					
10	RIP RAP	0	VARIES (1.0' MIN.)	3	6"	1.0'

*TURF REINFORCEMENT MATTING

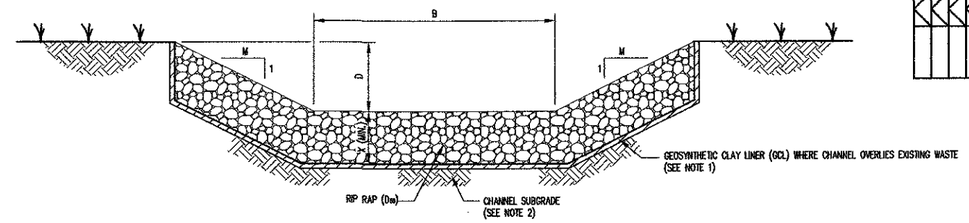

RIP RAP LINED CHANNELS

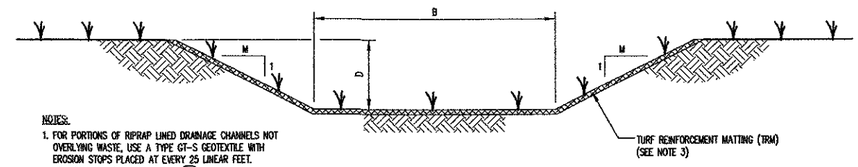

TRM LINED CHANNELS

NOTES:
1. FOR PORTIONS OF RIPRAP LINED DRAINAGE CHANNELS NOT OVERLYING WASTE, USE A TYPE GT-S GEOTEXTILE WITH EROSION STOPS PLACED AT EVERY 25 LINEAR FEET. FOR EROSION STOPS SEE DETAIL C / EC4
2. WHERE EXCAVATION INTO UNDERLYING WASTE IS REQUIRED, OVEREXCAVATE 1 FOOT AND BACKFILL WITH STRUCTURAL FILL.
3. FOR ANCHORAGE OF TRM, SEE DETAIL A / EC4

DRAINAGE CHANNEL DETAILS
DETAIL B / EC4
N.T.S.

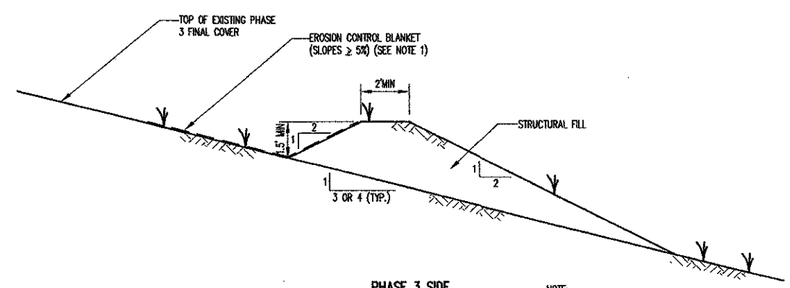

PHASE 3 SIDE

NOTE:
1. FOR ANCHORAGE OF ECB, SEE DETAIL A / EC4

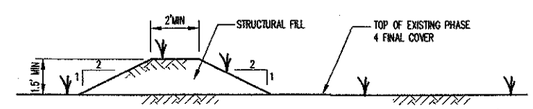

PHASE 4 SIDE

DIVERSION BERM CROSS SECTIONS
DETAIL D / EC4
SCALE 1"= 3'

ISSUED FOR CONSTRUCTION

DATE	NO	REVISION

G.N. RICHARDSON & ASSOCIATES, INC.
Engineering and Geological Services
425 N. BOYLAN AVENUE RALEIGH, N.C. 27603
PHONE-919-828-0577 FAX-919-828-3899 WWW.GNRA.COM

SEAL: NORTH CAROLINA PROFESSIONAL SEAL 021668 ENGINEER PETER K. SHEA 3/26/02

SEAL: NORTH CAROLINA PROFESSIONAL SEAL 3895 GEOLOGIST GREGORY A. NOSSOW 3/26/02

PROJECT TITLE: JOHNSTON COUNTY MSW LANDFILL PHASE 4A CELL 1 CONSTRUCTION DRAWINGS

DRAWING TITLE: EROSION AND SEDIMENTATION CONTROL DETAILS (SHEET 3 OF 4)

DESIGNED BY: P.K.S.	DRAWN BY: C.T.J.
CHECKED BY: G.N.R.	PROJECT NO.: JOHN-14
SCALE: AS SHOWN	DATE: FEB. 2002
FILE NAME: JOHN-D0243	
SHEET NO. 20	DRAWING NO. EC4

G:\-cadd\JOHNSTON\John-14\const-issue\sheets\JOHN-D0243.dwg DATE: MAR 26, 2002 TIME: 3:26 PM

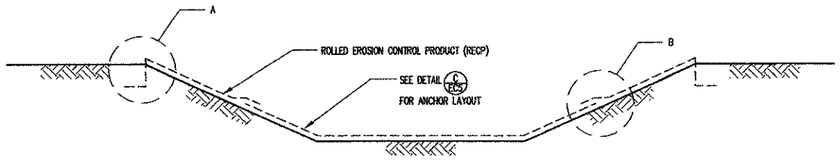

TYPICAL CHANNEL CROSS SECTION

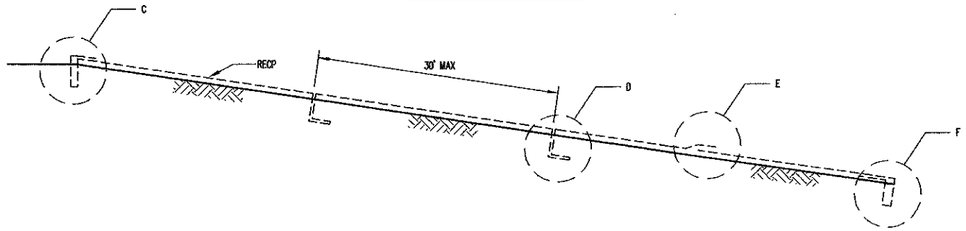

TYPICAL CHANNEL PROFILE

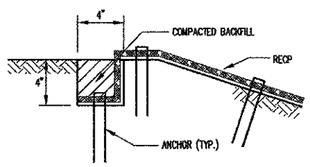

A. LONGITUDINAL ANCHOR TRENCH

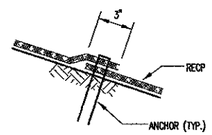

B. OVERLAP AT ADJACENT EDGES

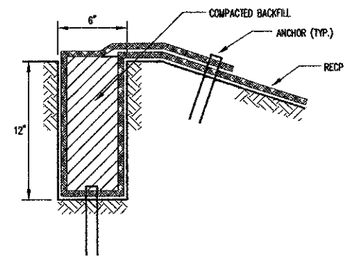

C. UPSTREAM TERMINAL ANCHOR TRENCH

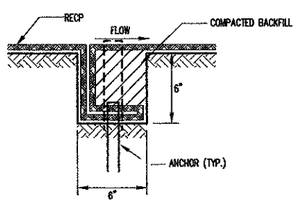

D. INTERMITTENT CHECK SLOT

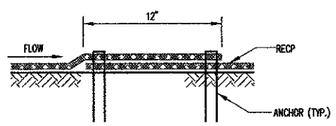

E. OVERLAP AT ROLL ENDS

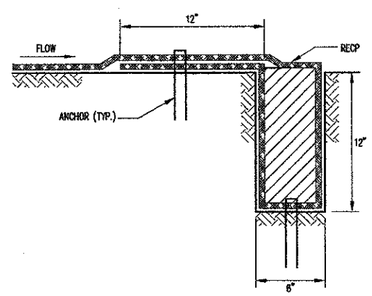

F. DOWNSTRAM TERMINAL ANCHOR TRENCH

NOTES:

1. PLACE ANCHORS AT ANCHOR TRENCHES, OVERLAPS, AND CHECK SLOTS ON 1 FOOT CENTERS. IF APPLICABLE, STAGGER ANCHOR SPACING BETWEEN MULTIPLE ROWS OF ANCHORS.

INSTALLATION OF ROLLED EROSION CONTROL PRODUCTS (CHANNELS)

DETAIL A/EC5 N.T.S.

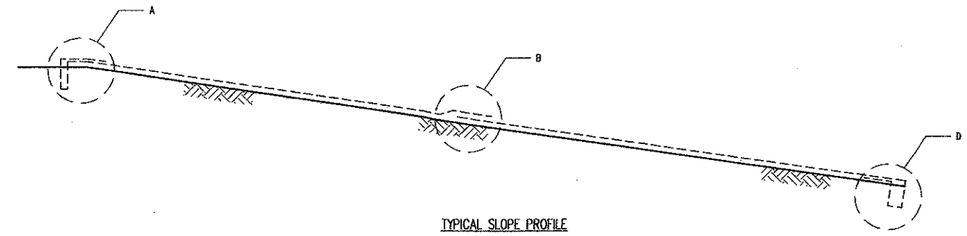

TYPICAL SLOPE PROFILE

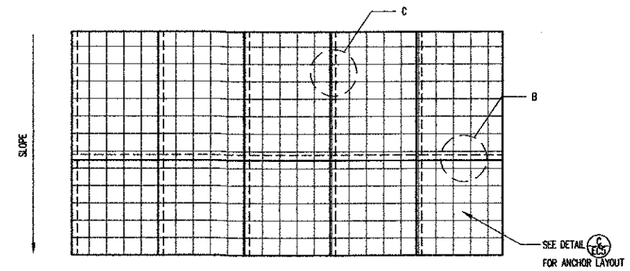

TYPICAL SLOPE PLAN VIEW

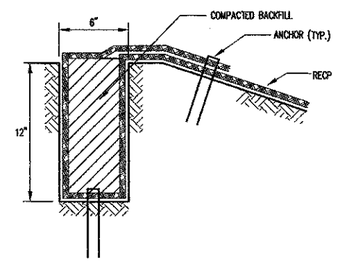

A. UPSLOPE TERMINAL ANCHOR TRENCH

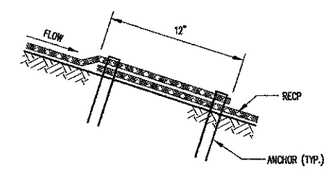

B. OVERLAP AT ROLL ENDS

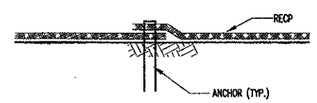

C. OVERLAP AT ADJACENT EDGES

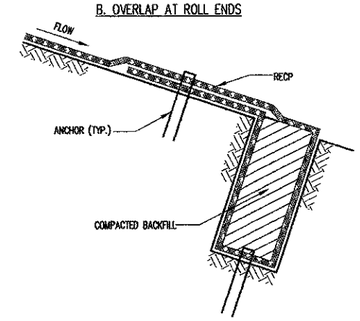

D. DOWNSLOPE TERMINAL ANCHOR TRENCH

NOTES:

1. PLACE ANCHORS AT ANCHOR TRENCHES, OVERLAPS, AND CHECK SLOTS ON 1 FOOT CENTERS. IF APPLICABLE, STAGGER ANCHOR SPACING BETWEEN MULTIPLE ROWS OF ANCHORS.

INSTALLATION OF ROLLED EROSION CONTROL PRODUCTS (SLOPES)

DETAIL B/EC5 N.T.S.

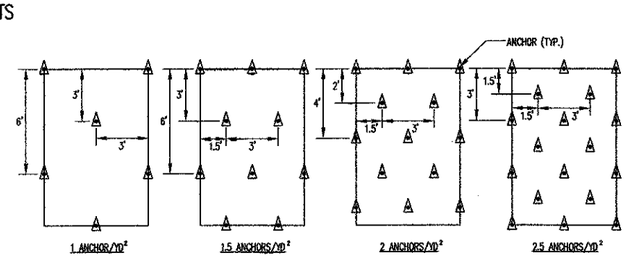

1 ANCHOR/YD² | 1.5 ANCHORS/YD² | 2 ANCHORS/YD² | 2.5 ANCHORS/YD²

ANCHOR LAYOUT

DETAIL C/EC5 N.T.S.

ANCHOR SPACING SCHEDULE	
LOCATION	REQUIRED ANCHOR SPACING (ANCHORS/YD²)
ALL CHANNELS	2.5
1.5H:1V SLOPES	2.0
2H:1V SLOPES	2.0
2.5H:1V SLOPES	1.5
3H:1V SLOPES	1.5
3.5H:1V SLOPES	1.0
4H:1V SLOPES	1.0

ISSUED FOR CONSTRUCTION

NO.	DATE	REVISION

G.N. RICHARDSON & ASSOCIATES, INC.
Engineering and Geological Services
425 N. BOYLAN AVENUE RALEIGH, N.C. 27603
PHONE-919-828-0577 FAX-919-828-3899 WWW.GNRA.COM

SEAL: PETER K. SPENCER, SEAL 021666, 3/26/02

SEAL: GREGORY W. RIGGS, SEAL 8895, 3/26/02

PROJECT TITLE: JOHNSTON COUNTY MSW LANDFILL PHASE 4A CELL 1 CONSTRUCTION DRAWINGS

DRAWING TITLE: EROSION AND SEDIMENTATION CONTROL DETAILS (SHEET 4 OF 4)

DESIGNED BY: P.K.S.	DRAWN BY: C.T.J.
CHECKED BY: G.N.R.	PROJECT NO.: JOHN-14
SCALE: AS SHOWN	DATE: FEB. 2002
FILE NAME: JOHN-00244	
SHEET NO. 21	DRAWING NO. EC5

C:\-cad\JOHNSTON\John-14\const-issue\priesta\JOHN-00244.dwg DATE: MAR 26, 2002 TIME: 2:32 PM

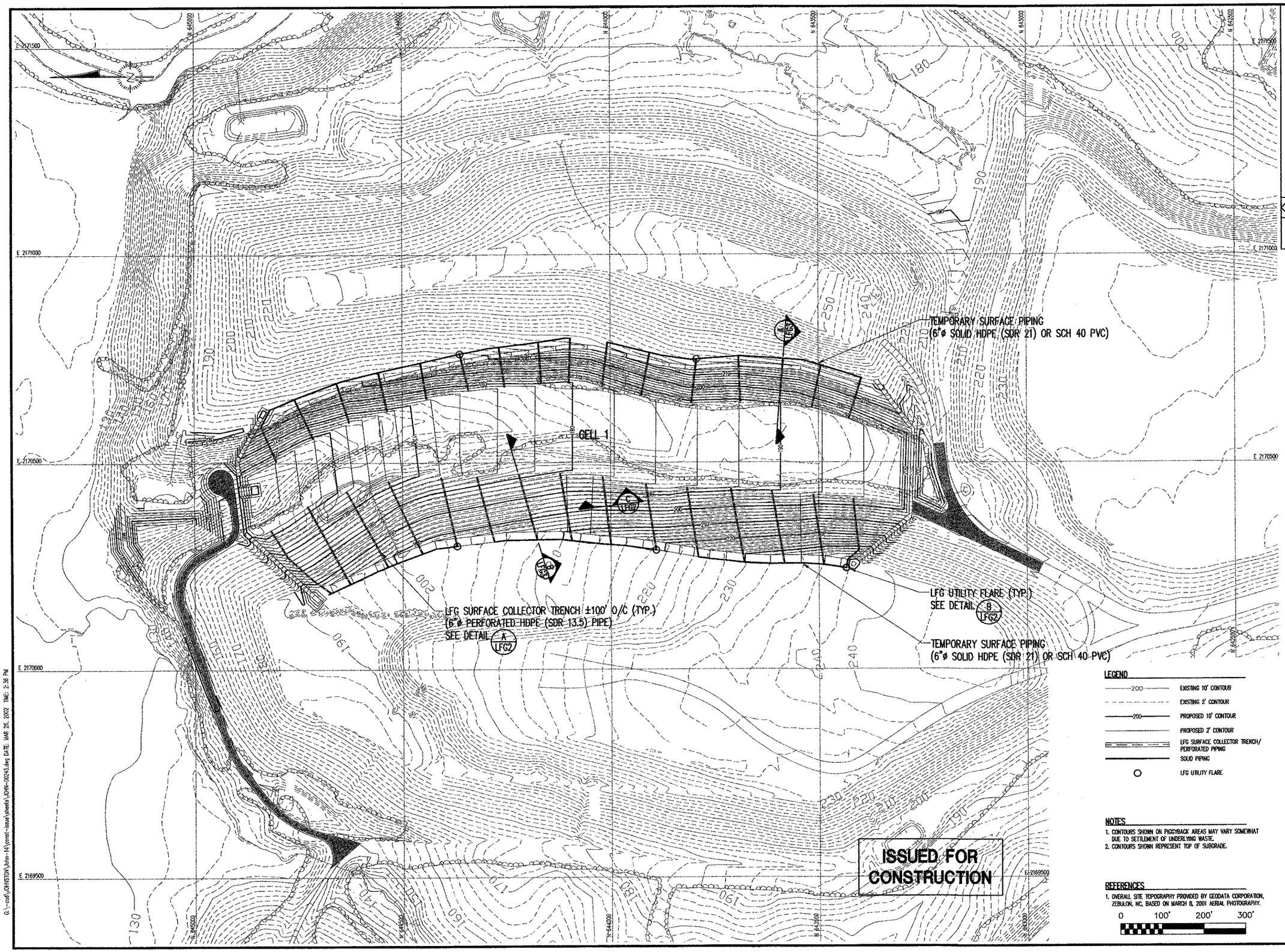

ISSUED FOR CONSTRUCTION

LEGEND

- EXISTING 10' CONTOUR
- EXISTING 2' CONTOUR
- PROPOSED 10' CONTOUR
- PROPOSED 2' CONTOUR
- LFG SURFACE COLLECTOR TRENCH/ PERFORATED PIPING
- SOLID PIPING
- LFG UTILITY FLARE

NOTES

1. CONTOURS SHOWN ON PIGGYBACK AREAS MAY VARY SOMEWHAT DUE TO SETTLEMENT OF UNDERLYING WASTE.
2. CONTOURS SHOWN REPRESENT TOP OF SUBGRADE.

REFERENCES

1. OVERALL SITE TOPOGRAPHY PROVIDED BY GEODATA CORPORATION, ZEBULON, NC, BASED ON MARCH 8, 2001 AERIAL PHOTOGRAPHY.

0 100' 200' 300'

G.N. RICHARDSON & ASSOCIATES, INC.
Engineering and Geological Services
425 N. BOYLAN AVENUE RALEIGH, N.C. 27603
PHONE-919-828-0677 FAX-919-828-3899 WWW.GNRA.COM

SEAL: NORTH CAROLINA PROFESSIONAL ENGINEER SEAL 021666 PIETER K. SCHEER 3/24/02

SEAL: NORTH CAROLINA PROFESSIONAL ENGINEER SEAL 8895 GREGORY N. RICHARDSON 3/24/02

PROJECT TITLE: JOHNSTON COUNTY MSW LANDFILL PHASE 4A CELL 1 CONSTRUCTION DRAWINGS

DRAWING TITLE: LANDFILL GAS MANAGEMENT PLAN

DESIGNED BY: P.K.S.	DRAWN BY: C.T.J.
CHECKED BY: G.N.R.	PROJECT NO.: JOHN-14
SCALE: AS SHOWN	DATE: FEB. 2002
FILE NAME: JOHN-D0245	
SHEET NO. 22	DRAWING NO. LFG1

G:\-cad\JOHNSTON\John-14\const-issue\sheets\JOHN-D0245.dwg DATE: MAR 26, 2002 TIME: 2:36 PM

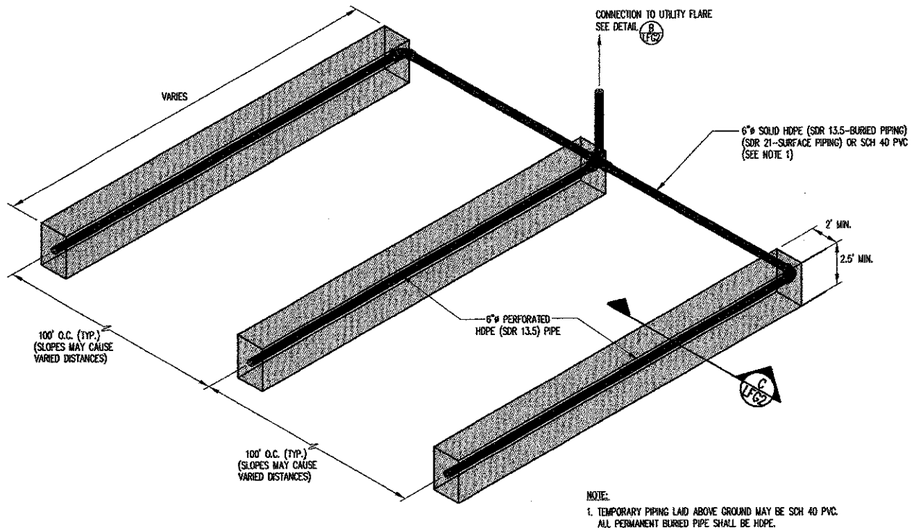

NOTE:
1. TEMPORARY PIPING LAID ABOVE GROUND MAY BE SCH 40 PVC. ALL PERMANENT BURIED PIPE SHALL BE HDPE.

GAS COLLECTION NETWORK
DETAIL A LFG2
N.T.S.

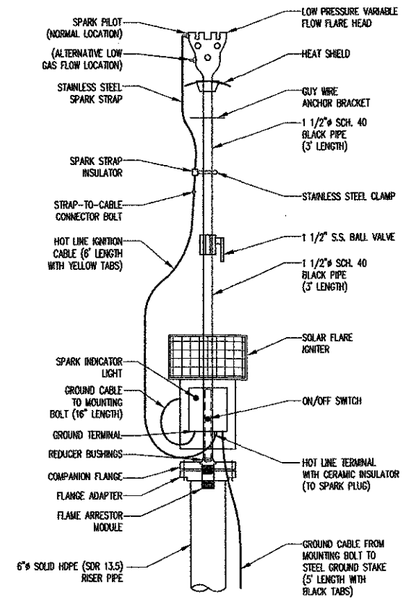

NOTE:
1. USE LANDFILL TECHNOLOGIES, INC. CF-5 SOLAR FLARE OR OTHER APPROVED EQUAL.

LFG UTILITY FLARE
DETAIL B LFG2
SCALE: 1"=1'

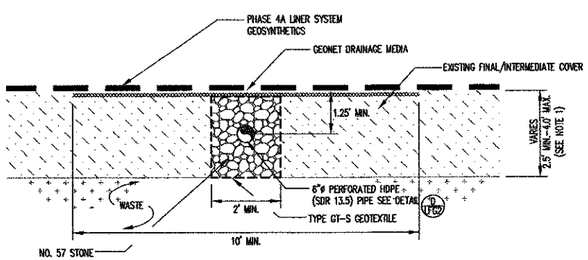

PHASES 3 & 4 FINAL COVER

NOTE:
1. EXCAVATE TRENCH SUCH THAT EXISTING COVER IS BREACHED OR TO A MAXIMUM DEPTH OF 4 FEET.

LFG SURFACE COLLECTOR TRENCH CROSS SECTION
DETAIL C LFG2
SCALE: 1"= 2'

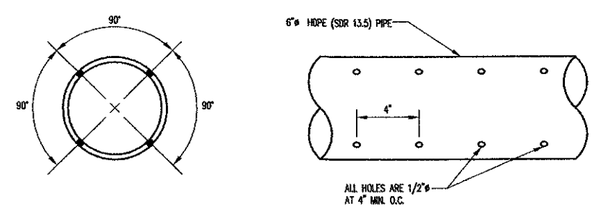

LANDFILL GAS PIPING

HDPE PIPE PERFORATIONS
DETAIL D LFG2
N.T.S.

ISSUED FOR CONSTRUCTION

REVISION	NO.	DATE

G.N. RICHARDSON & ASSOCIATES, INC.
Engineering and Geological Services
425 N. BOYLAN AVENUE RALEIGH, N.C. 27603
PHONE-919-828-0577 FAX-919-828-3899 WWW.GNRA.COM

SEAL: CAROLINA PROFESSIONAL SEAL 021666 PETER K. SPENCER ENGINEER 3/26/02

SEAL: NORTH CAROLINA PROFESSIONAL SEAL 8895 GREGORY N. RICHARDSON ENGINEER 3/26/02

PROJECT TITLE: JOHNSTON COUNTY MSW LANDFILL PHASE 4A CELL 1 CONSTRUCTION DRAWINGS

DRAWING TITLE: LANDFILL GAS MANAGEMENT DETAILS (SHEET 1 OF 2)

DESIGNED BY: P.K.S.	DRAWN BY: C.T.J.
CHECKED BY: G.N.R.	PROJECT NO.: JOHN-14
SCALE: AS SHOWN	DATE: FEB. 2002
FILE NAME: JOHN-D0246	
SHEET NO.: 23	DRAWING NO.: LFG2

G:\--cad\JOHNSTON\John-14\const-issue\sheets\JOHN-D0246.dwg DATE: MAR 26, 2002 TIME: 4:22 PM

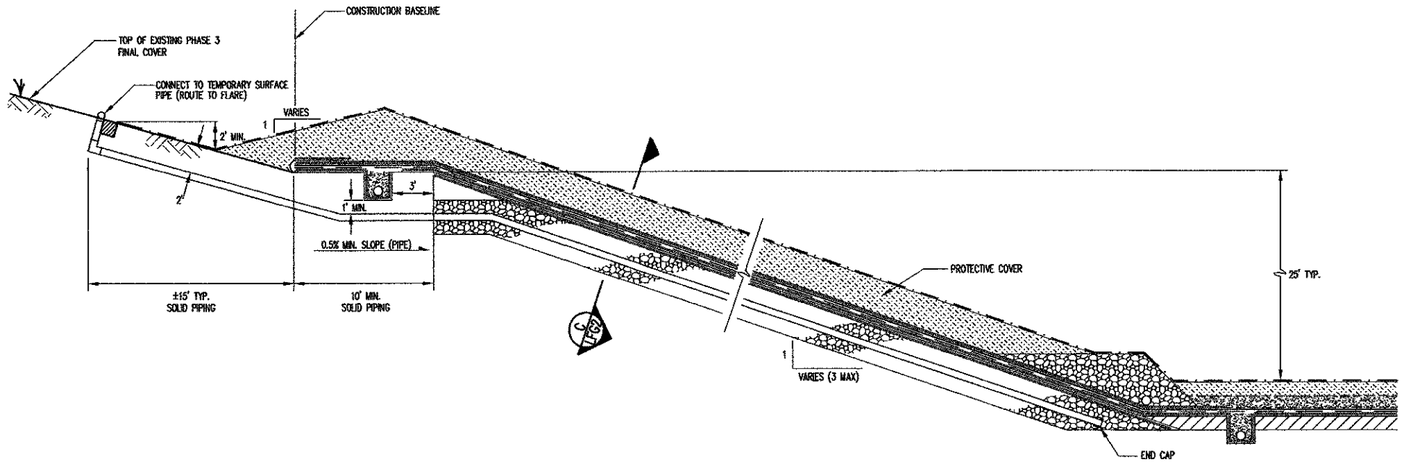

LFG SURFACE COLLECTOR TRENCH - EAST SIDE

DETAIL A LFG3
SCALE 1"=5'

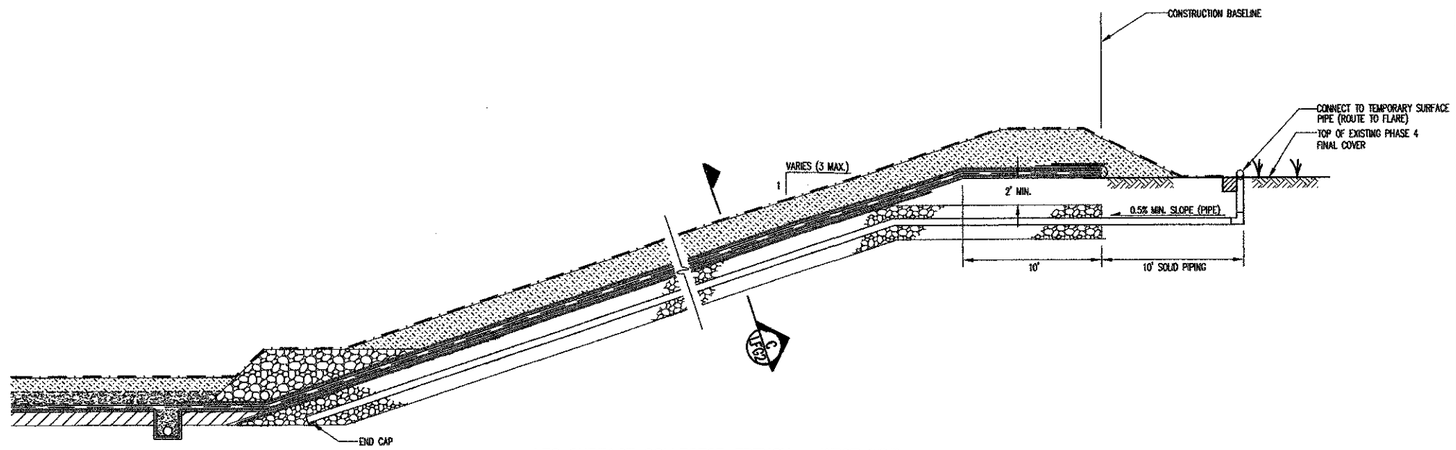

LFG SURFACE COLLECTOR TRENCH - WEST SIDE

DETAIL B LFG3
SCALE 1"= 5'

ISSUED FOR CONSTRUCTION

G.N. RICHARDSON & ASSOCIATES, INC.
Engineering and Geological Services
425 N. BOYLAN AVENUE RALEIGH, N.C. 27603
PHONE-919-828-0577 FAX-919-828-3899 WWW.GNRA.COM

DATE	NO.	REVISION

SEAL

PROJECT TITLE: JOHNSTON COUNTY MSW LANDFILL PHASE 4A CELL 1 CONSTRUCTION DRAWINGS

DRAWING TITLE: LANDFILL GAS MANAGEMENT DETAILS (SHEET 2 OF 2)

DESIGNED BY: P.K.S.	DRAWN BY: C.T.J.
CHECKED BY: G.N.R.	PROJECT NO.: JOHN-14
SCALE: AS SHOWN	DATE: FEB. 2002
FILE NAME: JOHN-D0247	
SHEET NO. 24	DRAWING NO. LFG3

G:\-cad\JOHNSTON\John-14\const-issue\sheets\JOHN-D0247.dwg DATE: MAR 26, 2002 TIME: 2:53 PM

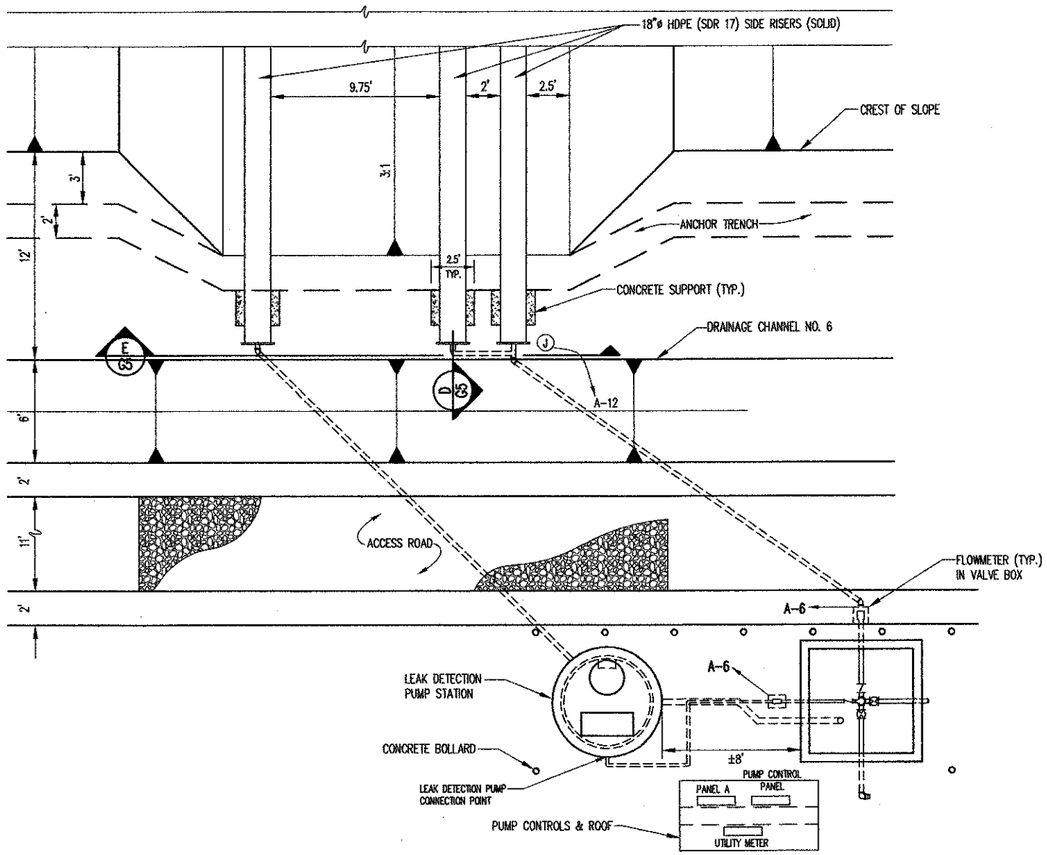

ELECTRICAL - PLAN VIEW

DETAIL A / EL1

SCALE: 1"=4'

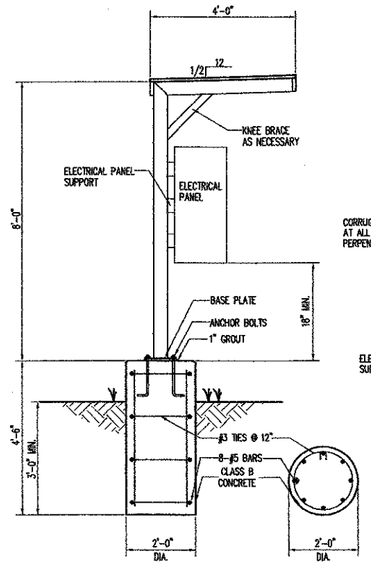

SECTION BASE

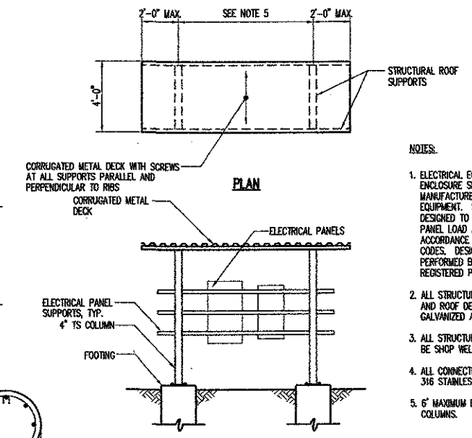

ELEVATION

NOTES:

1. ELECTRICAL EQUIPMENT SUPPORT AND ENCLOSURE SHALL BE DESIGNED BY MANUFACTURER OF ELECTRICAL EQUIPMENT. STRUCTURE SHALL BE DESIGNED TO SUPPORT ELECTRICAL PANEL LOAD AND ALL OTHER LOADS IN ACCORDANCE WITH APPLICABLE BUILDING CODES. DESIGN OF STRUCTURE SHALL BE PERFORMED BY A CURRENTLY REGISTERED PROFESSIONAL ENGINEER.
2. ALL STRUCTURAL SUPPORT MEMBERS AND ROOF DECKING SHALL BE GALVANIZED A36 STEEL.
3. ALL STRUCTURAL CONNECTIONS SHALL BE SHOP WELDED OR FIELD BOLTED.
4. ALL CONNECTING HARDWARE SHALL BE 316 STAINLESS STEEL.
5. 6' MAXIMUM BETWEEN SUPPORT COLUMNS.

TYPICAL ELECTRICAL PANEL SUPPORT

DETAIL B / EL1

SCALE: 1"= 2'

PANEL A									
LOAD (KVA)	DESIGNATION	CIRCUIT	BREAKER	CIRC. NO.	CIRC. NO.	BREAKER	CIRCUIT	DESIGNATION	LOAD (KVA)
6.9	PUMP CONTROL PANEL	4 #3 THHN #8G 1-1/4" RGS	80/3	1	2	20/1	2 #12 THHN #12G 1/2" RGS	RECEPTACLE	0.2
6.9	-	-	-	3	4	20/1	2 #12 THHN #12G 1/2" RGS	AREA LIGHT	0.2
4.8	-	-	-	5	6	20/1	2 #12 THHN #12G 1/2" RGS	FLOW METER	0.1
-	-	-	SPACE	7	8	20/1	-	SPARE	-
-	-	-	SPACE	9	10	20/1	-	SPARE	-
-	-	-	SPACE	11	12	20/1	2 #12 THHN #12G 1/2" RGS	HEAT TAPE	0.5

MOUNTED: SURFACE
VOLTAGE: 120/208V 3PH 4W
BUSSES: 125A
MAINS: 125A MAIN BREAKER
AICR: 22,000

ULSE LABEL
NEMA 4X ENCLOSURE

7.1 KVA PHASE A
7.1 KVA PHASE B
4.9 KVA PHASE C

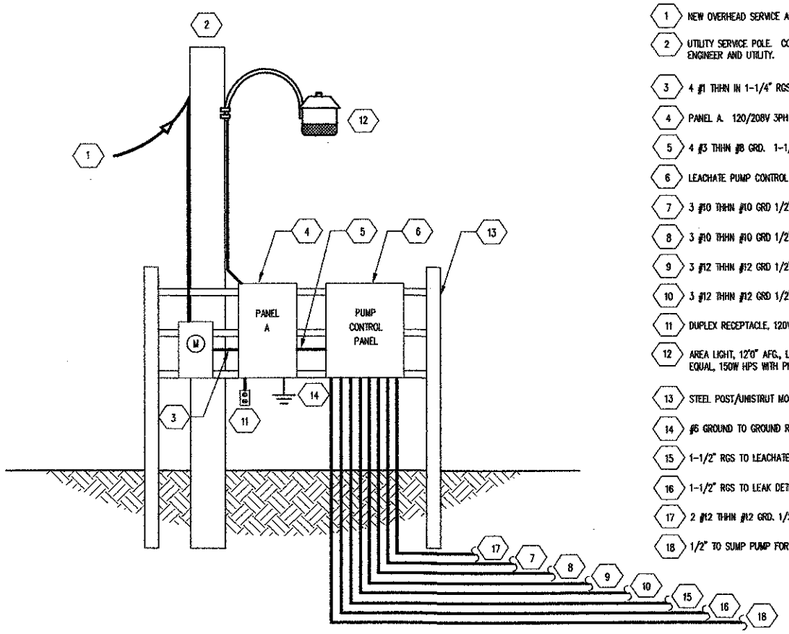

RISER DIAGRAM

DETAIL C / EL1

N.T.S.

RISER NOTES

1. NEW OVERHEAD SERVICE AND METER BY UTILITY. 120/208V 3PH 4W.
2. UTILITY SERVICE POLE. COORDINATE LOCATION ON SITE WITH ENGINEER AND UTILITY.
3. 4 #1 THHN IN 1-1/4" RGS.
4. PANEL A. 120/208V 3PH 4W, 125 A MAIN BREAKER.
5. 4 #3 THHN #8 GRD. 1-1/4" RGS.
6. LEACHATE PUMP CONTROL PANEL.
7. 3 #10 THHN #10 GRD 1/2" RGS TO LEACHATE PUMP.
8. 3 #10 THHN #10 GRD 1/2" RGS TO LEACHATE PUMP.
9. 3 #12 THHN #12 GRD 1/2" RGS TO LEAK DETECTION PUMP.
10. 3 #12 THHN #12 GRD 1/2" RGS TO LEAK DETECTION PUMP.
11. DUPLEX RECEPTACLE, 120V 20A, GFCI, WEATHERPROOF WHILE IN USE COVER.
12. AREA LIGHT, 12'0" AFG., LITHONIA NO. TDD- 150 S -120-PER-LP1 OR EQUAL, 150W HPS WITH PHOTO CELL CONTROL AND MOUNTING ARM.
13. STEEL POST/UNISTRUT MOUNTING STRUCTURE.
14. #6 GROUND TO GROUND ROD.
15. 1-1/2" RGS TO LEACHATE PUMPS FOR CONTROL WIRING.
16. 1-1/2" RGS TO LEAK DETECTION PUMPS FOR CONTROL WIRING.
17. 2 #12 THHN #12 GRD. 1/2" RGS TO SUMP PUMP.
18. 1/2" TO SUMP PUMP FOR CONTROL WIRING.

FOR BIDDING

NOT FOR CONSTRUCTION

NO.	DATE	REVISION

ANGUS CLARK, P.E.
CONSULTING ENGINEER
4904 WATERS EDGE DRIVE
SUITE 260
RALEIGH, NORTH CAROLINA 27606
919-852-4413
919-852-4448 TELEFAX

G.N. RICHARDSON & ASSOCIATES, INC.
CIVIL ENGINEERS
428 N. BOYLAN AVENUE RALEIGH, N.C. 27603
PHONE 919-832-0501 WWW.GNRA.COM

SEAL

PROJECT TITLE: JOHNSTON COUNTY MSW LANDFILL PHASE 4A CELL 1 CONSTRUCTION DRAWINGS

DRAWING TITLE: ELECTRICAL PLAN AND DETAILS

DESIGNED BY: A.C.	DRAWN BY: C.T.J.
CHECKED BY: P.K.S.	PROJECT NO.: JOHN-14
SCALE: AS SHOWN	DATE: FEB. 2002
FILE NAME: JOHN-D0202	
SHEET NO. 25	DRAWING NO. EL1

Q:\--cad\JOHNSTON\John-14\sheets\JOHN-D0202.dwg DATE: FEB 11, 2002 TIME: 10:07 AM

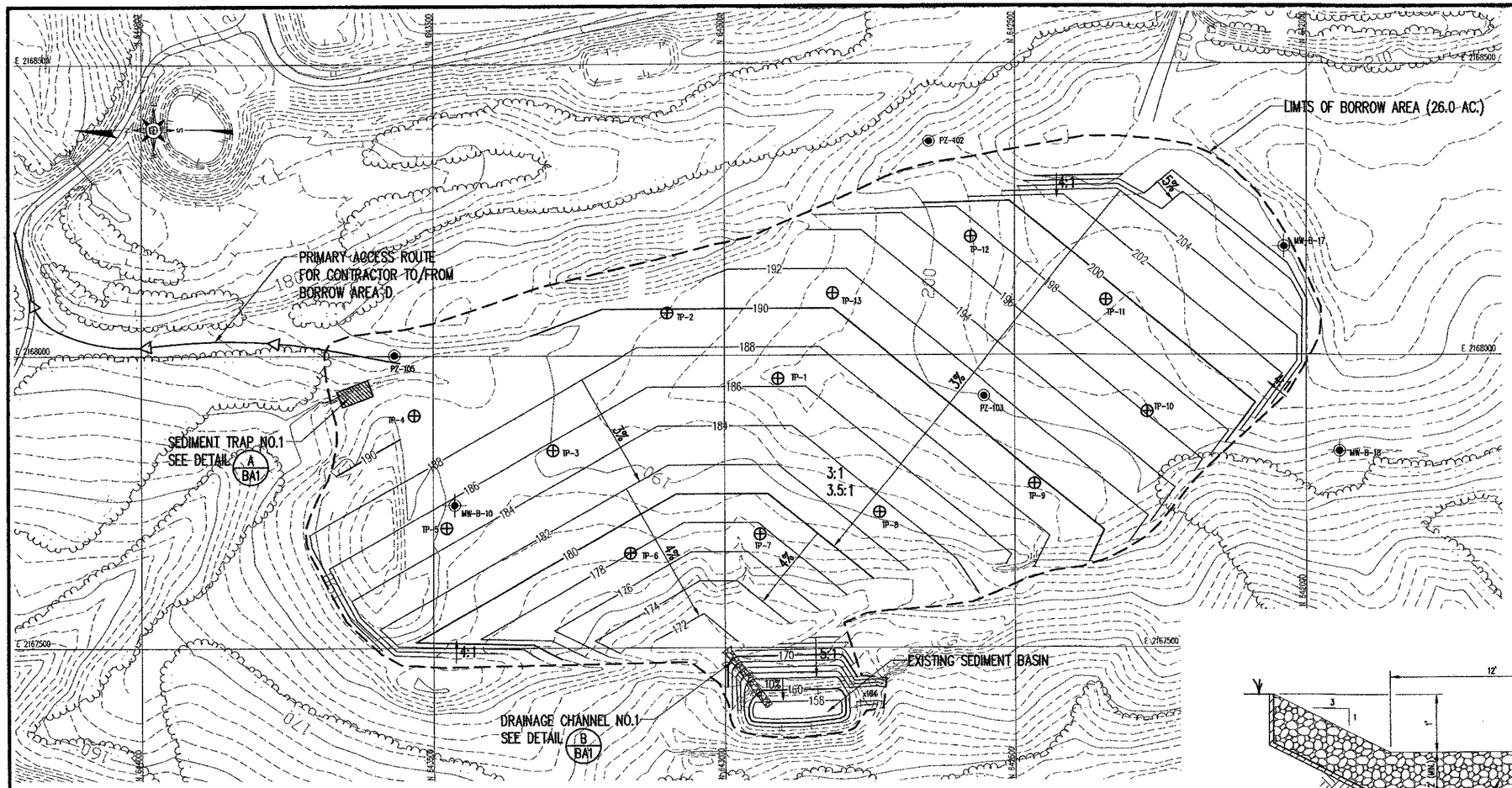

LEGEND

- 200 — EXISTING 10' CONTOUR
- EXISTING 2' CONTOUR
- 200 — PROPOSED 10' CONTOUR
- PROPOSED 2' CONTOUR
- LIMITS OF BORROW AREA
- TREELINE
- TEST PIT (APPROX. LOCATION) (GNRA, JULY 2001)
- PREVIOUS BORING (APPROX. LOCATION) (S&ME, APRIL 1994)
- PREVIOUS PIEZOMETER (APPROX. LOCATION) (PATTERSON EXPLORATION, OCTOBER 1993 & MARCH 1994)

NOTES

1. CONTOURS SHOWN REPRESENT MAXIMUM DEVELOPMENT ELEVATIONS. THE CONTRACTOR SHALL BE RESPONSIBLE FOR SURVEYING NECESSARY TO ESTABLISH THESE ELEVATIONS.
2. EXCAVATIONS MADE BELOW ELEVATIONS SHOWN SHALL BE BACKFILLED WITH STRUCTURAL FILL AT THE CONTRACTOR'S SOLE EXPENSE.
3. THE CONTRACTOR IS RESPONSIBLE FOR CONSTRUCTING ALL EROSION AND SEDIMENTATION CONTROL STRUCTURES.
4. THE CONTRACTOR IS REQUIRED TO GRADE ALL DISTURBED AREAS USED TOWARD THE DESIGNED DRAINAGE STRUCTURES TO THE SATISFACTION OF THE OWNER PRIOR TO REVEGETATION. NO AREAS WHICH POND WATER OUTSIDE OF THE DESIGNED STRUCTURES WILL BE ALLOWED.
5. THE CONTRACTOR SHALL REVEGETATE ALL AREAS DISTURBED BY HIS OPERATIONS.

REFERENCES

1. OVERALL SITE TOPOGRAPHY PROVIDED BY GEODATA CORPORATION, ZEBULON, NC, BASED ON MARCH 8, 2001 AERIAL PHOTOGRAPHY.

0 100' 200' 300'

ISSUED FOR CONSTRUCTION

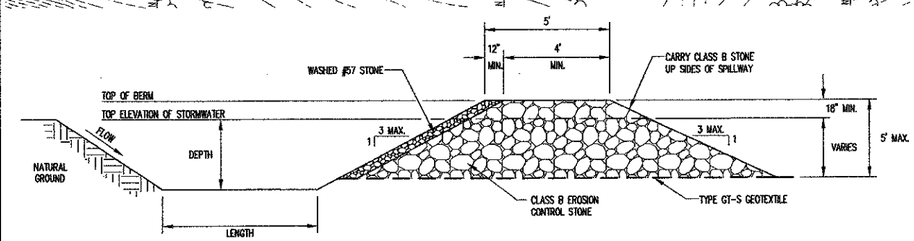

NOTE:
1. CLEAN TRAP WHEN SEDIMENT REACHES ONE-HALF OF THE DESIGN DEPTH.

SECTION THRU TRAP AND OUTLET

SEDIMENT TRAP SCHEDULE				
TRAP	WIDTH	LENGTH	DEPTH	WEIR LENGTH
1	7'	35'	3.5'	6'

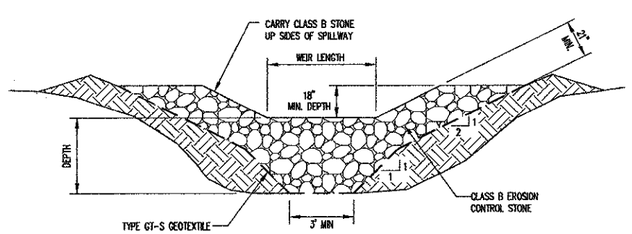

SECTION THRU BERM AND OUTLET

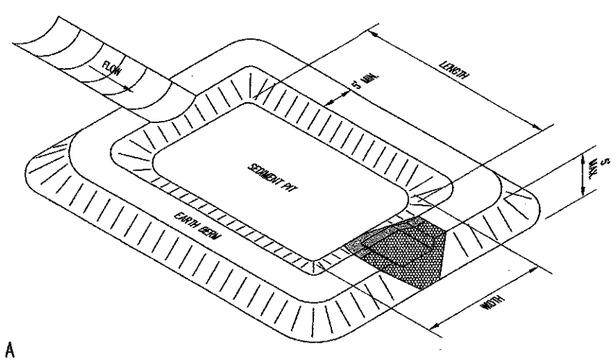

PERSPECTIVE VIEW

SEDIMENT TRAP A
DETAIL A BA1
N.T.S.

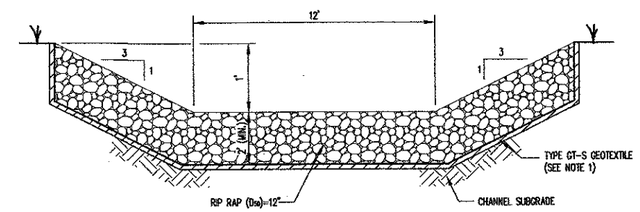

NOTES:
1. PLACE EROSION STOPS EVERY 25 LINEAR FEET. FOR EROSION STOPS SEE DETAIL C BA1

DRAINAGE CHANNEL NO.1 CROSS SECTION
DETAIL B BA1
N.T.S.

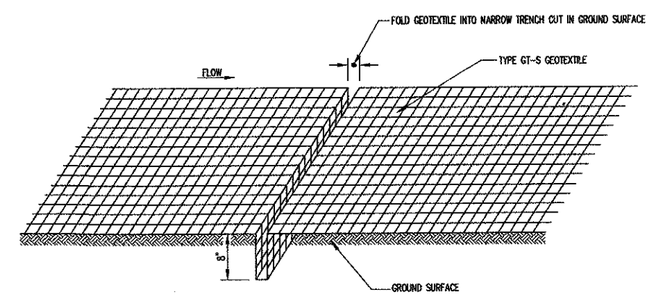

EROSION STOP DETAIL
DETAIL C BA1
N.T.S.

G.N. RICHARDSON & ASSOCIATES, INC.
Engineering and Geological Services
425 N. BOYLAN AVENUE RALEIGH, N.C. 27603
PHONE-919-828-0577 FAX-919-828-3899 WWW.GNRA.COM

PROJECT TITLE: JOHNSTON COUNTY MSW LANDFILL PHASE 4A CELL 1 CONSTRUCTION DRAWINGS

DRAWING TITLE: BORROW AREA D DEVELOPMENT PLAN

DESIGNED BY: P.K.S.	DRAWN BY: C.T.J.
CHECKED BY: G.N.R.	PROJECT NO.: JOHN-14
SCALE: AS SHOWN	DATE: FEB. 2002
FILE NAME: JOHN-D0249	
SHEET NO. 26	DRAWING NO. BA1

G:\1-cad\JOHNSTON\john-14\const-issue\sheets\JOHN-D0249.dwg DATE: MAR 26, 2002 TIME: 2:49 PM

LANDFILL RECLAIMED EFFLUENT IRRIGATION SYSTEM

JUNE 2001

CONTRACT 4

BOARD OF COMMISSIONERS

James H. Langdon, Jr., Chairman
Cookie Pope
Thomas M. Moore
Allen Mimms, Jr.
Wade M. Stewart
Fred Smith
W. Ray Woodall

Owner - Johnston County

Rick J. Hester, County Manager

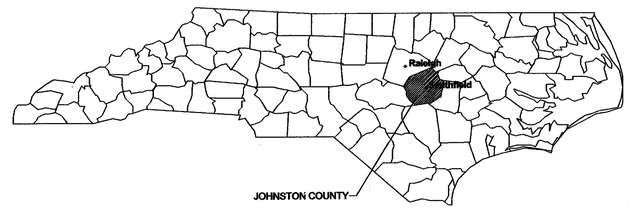

Vicinity Map

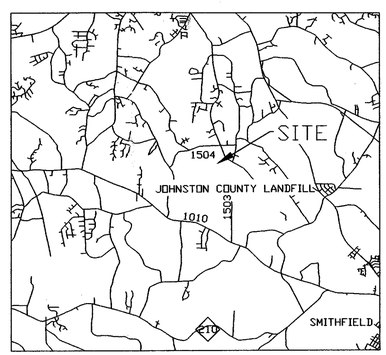

Location Map

TABLE OF CONTENTS

C1 - Cover

C2 - Project Notes/Legend

C3 - Irrigation System Plan - Area A

C4 - Irrigation System Plan - Area B

C5 - Irrigation System Plan - Area C

C6 - Livestock Arena Detail

C7 - Irrigation Details

C8 - Pipe Laying and Erosion Control Details

JOHNSTON COUNTY
DEPARTMENT OF PUBLIC UTILITIES
P.O. BOX 2263
SMITHFIELD, NC 27577

NORTH CAROLINA PROFESSIONAL ENGINEER RONALD E. SNEED

April 15, 2002

AUG 2002 Received Solid Waste Section

RECEIVED

CONSTRUCTION GRANTS & LOAN SECTION

LEGEND

ABOVEGROUND SHUTOFF VALVE, WHICH IS PART OF ALUMINUM PIPE SYSTEM	
BURIED GATE VALVE	
COMBINATION AIR RELIEF/VACUUM RELIEF/PRESSURE AIR RELIEF VALVE	
FULL CIRCLE SENNINGER MODEL 7025 SPRINKLER ON ALUMINUM PIPE	
PART CIRCLE RAIN BIRD OR WALLA WALLA SPRINKLERS ON ALUMINUM PIPE	
FULL CIRCLE SENNINGER MODEL 5023 SPRINKLERS ON PVC PIPE	
PART CIRCLE RAIN BIRD OR WALLA WALLA SPRINKLERS ON PVC PIPE	
BURIED PVC PIPE, SDR 21, CLASS 200	UG UG UG
HYDRANTS	H
DELINEATED WETLAND PER MCKIM & CREED SURVEY	
PROPERTY LINE	
STREAM	
OUTLINE OF FIELD AND/OR LANDFILL	

GENERAL CONSTRUCTION NOTES

1. JOHNSTON COUNTY LANDFILL REUSE WATER IRRIGATION SYSTEM DESIGNED BY RONALD E. SNEED, PE.
2. SYSTEM CONSISTS OF ONE CENTER PIVOT, REMAINDER IS ABOVE GROUND ALUMINUM PIPE AND UNDERGROUND SUPPLY LINE WITH HYDRANTS.
3. ALL SPRINKLERS FOR ALUMINUM PIPE SHALL BE FULL CIRCLE MODEL 7025 SENNINGER PLASTIC SPRINKLERS EXCEPT FOR THE PART CIRCLE SPRINKLERS ON LANDFILL SIDE SLOPES WHICH SHALL BE RAIN BIRD OR WALLA WALLA.
4. SPRINKLERS ON ROAD AROUND LANDFILL 5 SHALL BE SENNINGER MODEL 5023.
5. SPRINLKERS ON ROAD TO LANDFILL 1 & 2, 3 & 4 SHALL BE RAIN BIIRD, PART CIRCLE.
6. ALL ROAD DUST CONTROL SPRINKLERS SHALL BE MOUNTED IN RISERS, ATTACHED TO UNDERGROUND PVC PIPE AND SHALL BE AT LEAST 5 FEET OFF THE ROAD EDGE.
7. ALL UNDERGROUND PIPING UNDER 16" SHALL BE CLASS 200 PVC PIPE. ALL PIPING 16" AND LARGER SHALL BE DIP, CLASS 50.
8. ALUMINUM PIPE WILL BE USED FROM HYDRANTS AT BASE OF LANDFILL CELLS TO ALUMINUM PIPE LATERALS ON LANDFILLS.
9. ALL UNDERGROUND UTILITIES ARE APPROXIMATE LOCATION. IT IS POSSIBLE THAT ALL EXISTING UTILITIES HAVE NOT BEEN SHOWN ON THE DRAWINGS. CONTRACTOR TO VERIFY SIZE, DEPTH, LOCATION AND MATERIAL OF ALL EXISTING UTILITIES PRIOR TO THE START OF CONSTRUCTION. CONTRACTOR SHALL CONTACT N.C. ONE CALL AND JOHNSTON COUNTY PUBLIC UTILITIES (989-5075) MIN. 48 HOURS PRIOR TO THE START OF CONSTRUCTION (1-800-632-4949).
10. CONTRACTOR TO INSTALL EROSION CONTROL MEASURES PRIOR TO THE START OF CONSTRUCTION.
11. ALL DISTURBED AREAS SHALL BE RESEEDED WITH LIKE GRASSES AND TACK COAT ADDED.
12. ALL FITTINGS SHALL BE DUCTILE IRON. ALL PIPE FITTINGS HAVE NOT BEEN SHOWN. CONTRACTOR SHALL PROVIDE/INSTALL ALL FITTINGS, FLEX COUPLINGS, JOINT RESTRAINT, THRUST BLOCKING, ETC. NECESSARY FOR COMPLETE INSTALLATION. SOME FITTINGS MAY REQUIRE FABRICATION.
13. CONTRACTOR SHALL RESTORE ALL GRAVEL, CONCRETE AND PAVED DRIVEWAYS, ROADWAYS, AND CULVERT PIPES WITH SAME MATERIAL(S) TO ORIGINAL CONDITION.
14. ALL DISTURBED DITCH LINES SHALL BE RESHAPED, RESEEDED, MULCHED AND TACK COAT APPLIED.
15. CONTRACTOR SHALL INSTALL (10LF) STRAW WITH NET TEMPORARY LINER BEYOND OUTLETS OF ALL DRIVEWAY PIPES WHERE DITCH IS DENUDED.
16. MAXIMUM TRENCH WIDTHS FOR PIPE LAYING SHALL BE 2 FEET AT TOP OF TRENCH IN ALL PAVED AREAS. CONTRACTOR SHALL FOLLOW ALL OSHA GUIDELINES.
17. CONTRACTOR SHALL NOTIFY APPROPRIATE PERSON AND AGENCIES TWO WEEKS PRIOR TO THE BEGINNING OF CONSTRUCTION.
    JOHNSTON COUNTY PUBLIC UTILITIES – HAYWOOD PHTHISIC (919 989-5075)
18. CONTRACTOR SHALL PLACE ALL SPOIL MATERIAL ON THE UPHILL SIDE AWAY FROM ALL ROAD SIDE DITCHES, CREEKS AND WATER COURSES DURING CONSTRUCTION.
19. HORIZONTAL CONTROL/LAYOUT FOR UNDERGROUND PIPE SHALL BE RESPONSIBILITY OF JOHNSTON COUNTY PUBLIC UTILITIES.
20. CONTRACTOR SHALL MAKE EVERY EFFORT TO SAVE PROPERTY IRONS, MONUMENTS, OTHER PERMANENT POINTS OF REFERENCE AND CONSTRUCTION STAKES. PROPERTY IRONS, MONUMENTS AND OTHER PERMANENT POINTS OF REFERENCE DESTROYED BY CONTRACTOR SHALL BE REPLACED BY A PROFESSIONAL LAND SURVEYOR AT CONTRACTOR'S EXPENSE.
21. ALL CLEARING REQUIRED FOR PIPE INSTALLATION WILL BE THE RESPONSIBILITY OF THE OWNER.
22. WHEN WORKING ADJACENT TO EXISTING STRUCTURES, POLES, UTILITIES, MONITORING WELLS, ETC. CONTRACTOR SHALL USE WHATEVER METHODS ARE NECESSARY TO PROTECT STRUCTURES FROM DAMAGE. REPLACEMENT OF DAMAGED STRUCTURES SHALL BE AT CONTRACTORS EXPENSE.
23. IF CONSTRUCTION SCHEDULE DOES NOT ALLOW PERMANENT SEEDING ON THE DATES SHOWN IN SPECIFICATIONS, CONTRACTOR SHALL INSTALL TEMPORARY SEEDING WITHIN 14 DAYS. WHEN PERMANENT SEEDING DATES CAN BE ACCOMODATED THE CONTRACTOR SHALL RESEED WITH PERMANENT SEEDING MIXTURES.
24. CONTRACTOR SHALL NOT DISTURB INSIDE DELINEATED WETLAND BUFFER.
25. A COMBINATION AIR RELEASE/AIR VACUUM/PRESSURE AIR RELEASE VALVE SHALL BE INSTALLED AT EACH DEAD END HYDRANT AND BEFORE EACH ISOLATION VALVE.

REVISION INFORMATION

Num	Description	Date	Init

DRAWING INFORMATION

	Init	Date
Drawn By:	SRM	06/01
Checked By:	KCY	06/01
Approved By:	RES	06/01
SCALE: Not To Scale		

NORTH CAROLINA PROFESSIONAL ENGINEER SEAL 9 RONALD E. SNEED
April 15, 2002

Project Notes

LANDFILL RECLAIMED EFFLUENT IRRIGATION SYSTEM

JOHNSTON COUNTY
Department of Public Utilities
P.O. Box 2263
Smithfield, NC 27577

SHEET
C2
of 8

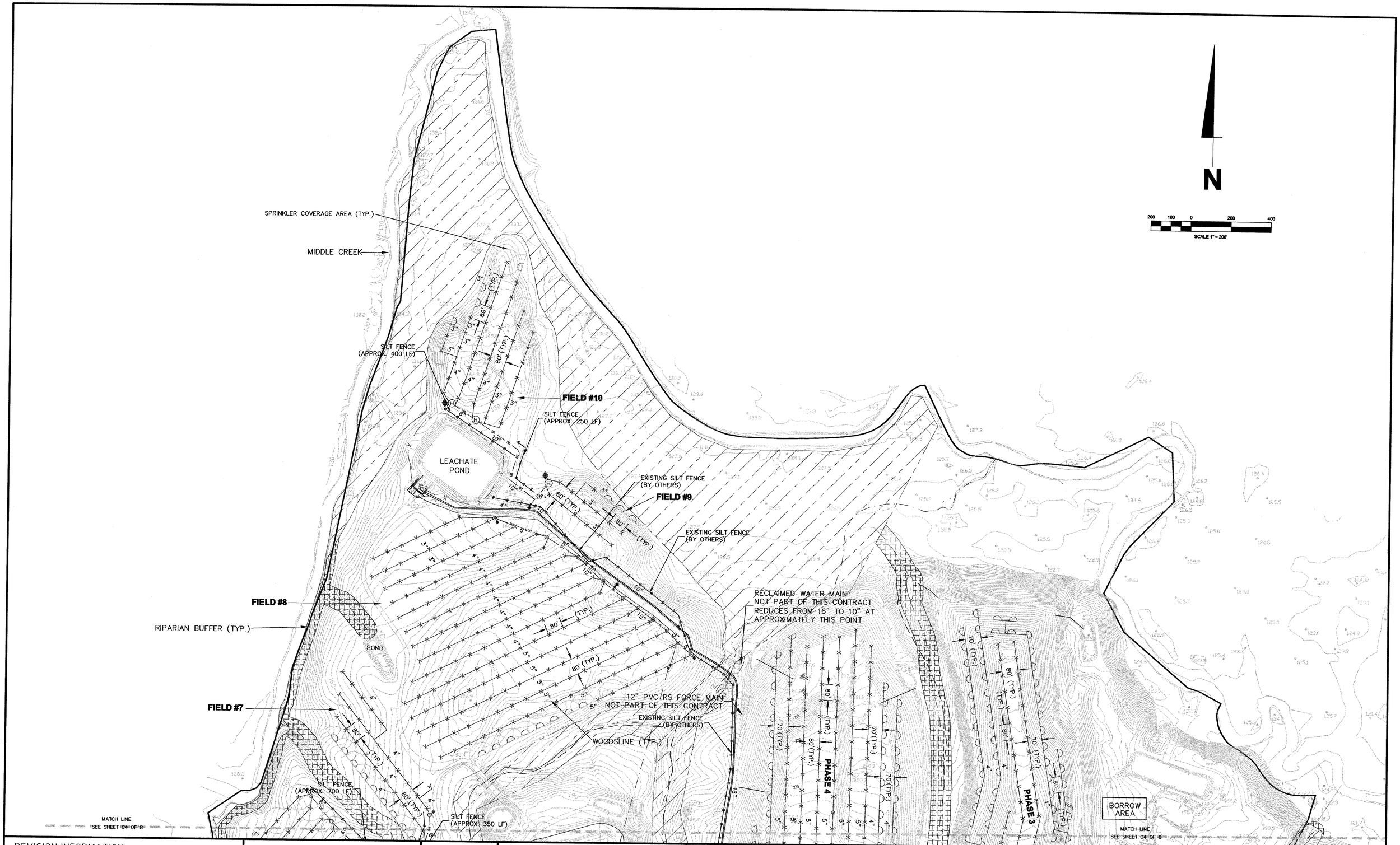

REVISION INFORMATION			
Num	Description	Date	Init

DRAWING INFORMATION		
	Init	Date
Drawn By:	SRM	06/01
Checked By:	KCY	06/01
Approved By:	RES	06/01
SCALE: Hor. 1" = 200'		

NORTH CAROLINA PROFESSIONAL SEAL ENGINEER RONALD E. SNEED
April 15, 2002

Irrigation System Plan - Area A

LANDFILL RECLAIMED EFFLUENT IRRIGATION SYSTEM

JOHNSTON COUNTY
Department of Public Utilities
P.O. Box 2263
Smithfield, NC 27577

SHEET
C3
of 8

MATCH LINE
SEE SHEET C3 OF 8

WOODSLINE (TYP.)

FIELD #6

SILT FENCE (APPROX. 350 LF)

SILT FENCE (APPROX. 1,500 LF)

SILT FENCE (APPROX. 550 LF)

SEDIMENT POND

BORROW AREA WILL BE STABILIZED PRIOR TO CONSTRUCTION, NOT PART OF THIS CONTRACT

FIELD #5

FIELD #4

PHASE 5 ACTIVE CELL

SPRINKLER HEAD COVERAGE AREA (TYP.)

CHECK DAM #3
CHECK DAM #2
SILT FENCE (APPROX. 400 LF)

BREACHED POND TO BE FILLED

RIPARIAN BUFFER (TYP.)

CENTER PIVOT IRRIGATION SYSTEM

SILT FENCE (APPROX. 750 LF)

BREACHED POND TO BE FILLED

820'

FIELD #2

TANK OVERFLOW BASIN

MATCH LINE
SEE SHEET C5 OF 8

ONE U/G GV SHALL CONTROL ALL DUST CONTROL SPRINKLERS

INSTALL THIS ARV BETWEEN VALVE FOR DUST CONTROL AND MAIN LINE

15' OFF EDGE OF ROAD (TYP.)

EXISTING SILT FENCE (BY OTHERS)

EXIST. 16"

5' OFF EDGE OF ROAD (TYP.)

16" RECLAIMED WATER LINE BY OTHERS

PARKING

OFFICE

PARKING

FIELD #3

START 4" (TYP.)

LIVESTOCK ARENA SEE DETAIL SHEET FOR IRRIGATION SYSTEM IN THIS AREA

CHECK DAM #1

EXIST. 6" PVC WATER LINE

FUTURE BELT PRESS

FOREST SERVICE

SILT FENCE (APPROX. 450 LF)

SILT FENCE (APPROX. 200 LF)

PHASE 1 & 2

SILT FENCE (APPROX. 1,200 LF)

SILT FENCE (APPROX. 400 LF)

SILT FENCE (APPROX. 950 LF)

BORROW AREA

MATCH LINE
SEE SHEET C3 OF 8

MATCH LINE
SEE SHEET C5 OF 8

N

200 100 0 200 400
SCALE 1" = 200'

REVISION INFORMATION				DRAWING INFORMATION		
Num	Description	Date	Init		Init	Date
				Drawn By:	SRM	06/01
				Checked By:	KCY	06/01
				Approved By:	RES	06/01
				SCALE: Hor. 1" = 200'		

NORTH CAROLINA PROFESSIONAL ENGINEER SEAL RONALD E. SNIDER
April 15, 2002

Irrigation System Plan - Area B

LANDFILL RECLAIMED EFFLUENT IRRIGATION SYSTEM

JOHNSTON COUNTY
Department of Public Utilities
P.O. Box 2263
Smithfield, NC 27577

SHEET
C4
of 8

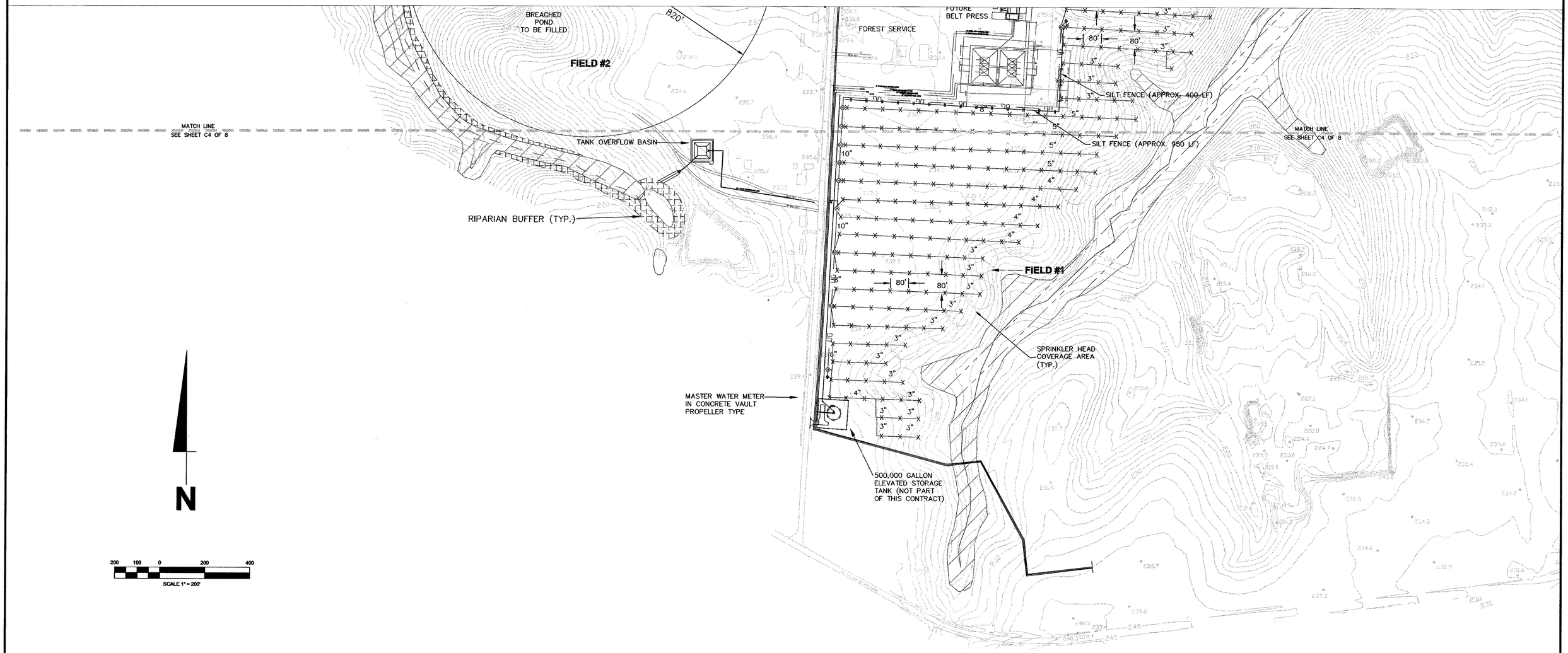

REVISION INFORMATION			
Num	Description	Date	Init

DRAWING INFORMATION		
	Init	Date
Drawn By:	SRM	06/01
Checked By:	KCY	06/01
Approved By:	RES	06/01
SCALE: Hor. 1" = 200'		

NORTH CAROLINA PROFESSIONAL ENGINEER SEAL 5569 RONALD E. SNEED

April 15, 2002

Irrigation System Plan - Area C

LANDFILL RECLAIMED EFFLUENT IRRIGATION SYSTEM

JOHNSTON COUNTY
Department of Public Utilities
P.O. Box 2263
Smithfield, NC 27577

SHEET
C5
of 8

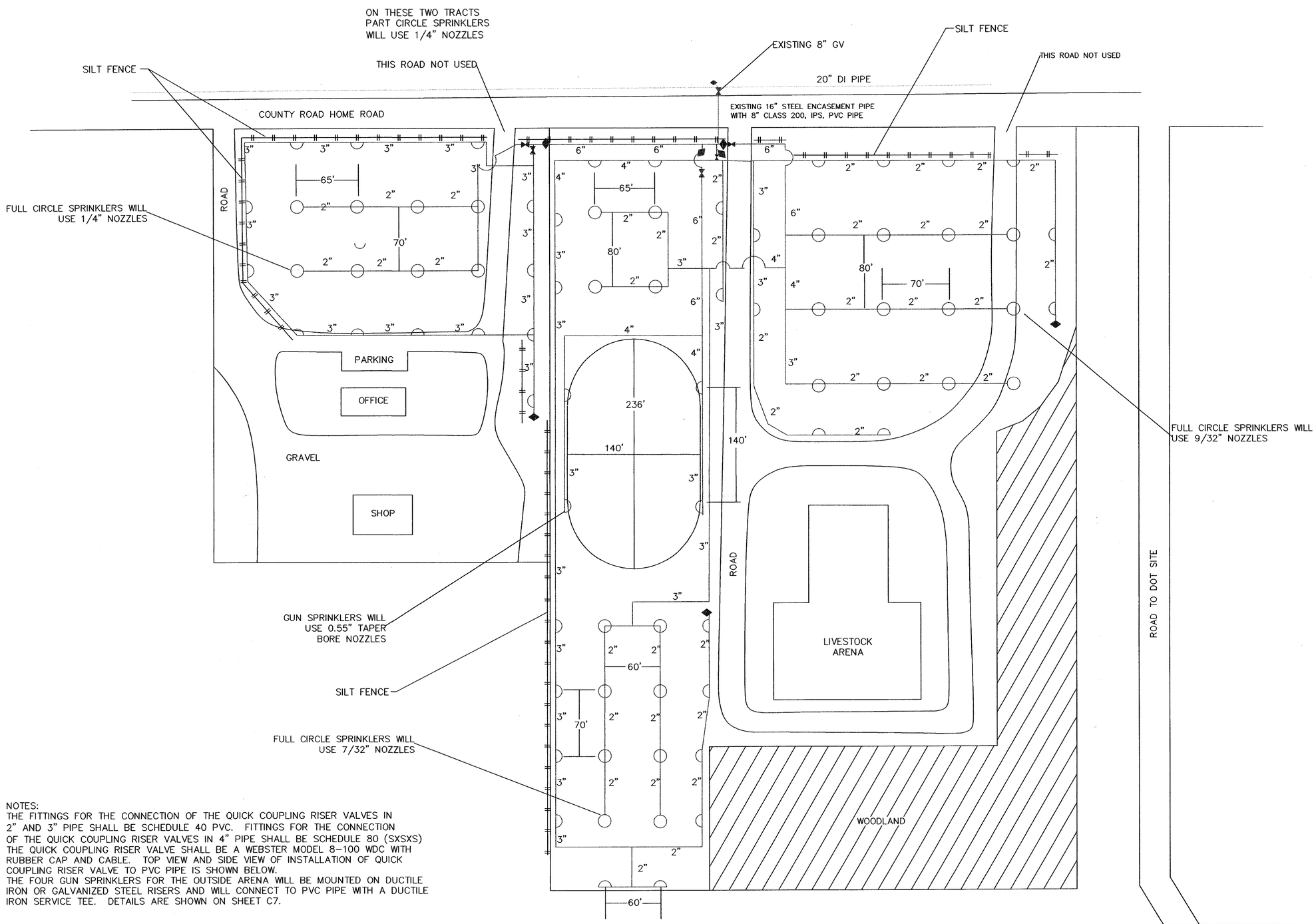

NOTES:
THE FITTINGS FOR THE CONNECTION OF THE QUICK COUPLING RISER VALVES IN 2" AND 3" PIPE SHALL BE SCHEDULE 40 PVC. FITTINGS FOR THE CONNECTION OF THE QUICK COUPLING RISER VALVES IN 4" PIPE SHALL BE SCHEDULE 80 (SXSXS) THE QUICK COUPLING RISER VALVE SHALL BE A WEBSTER MODEL 8-100 WDC WITH RUBBER CAP AND CABLE. TOP VIEW AND SIDE VIEW OF INSTALLATION OF QUICK COUPLING RISER VALVE TO PVC PIPE IS SHOWN BELOW.
THE FOUR GUN SPRINKLERS FOR THE OUTSIDE ARENA WILL BE MOUNTED ON DUCTILE IRON OR GALVANIZED STEEL RISERS AND WILL CONNECT TO PVC PIPE WITH A DUCTILE IRON SERVICE TEE. DETAILS ARE SHOWN ON SHEET C7.

F:/PROJECT/LANDFILL/REUSE/LIVESTOCKARENA

REVISION INFORMATION			
Num	Description	Date	Init

DRAWING INFORMATION		
	Init	Date
Drawn By:	SRM	06/01
Checked By:	KCY	06/01
Approved By:	RES	06/01
SCALE: 1"=50'		

NORTH CAROLINA PROFESSIONAL SEAL 14568 ENGINEER RONALD E. SNEED
April 15, 2002

Livestock Arena Detail

LANDFILL RECLAIMED EFFLUENT IRRIGATION SYSTEM

JOHNSTON COUNTY
Department of Public Utilities
P.O. Box 2263
Smithfield, NC 27577

SHEET
C6
of 8

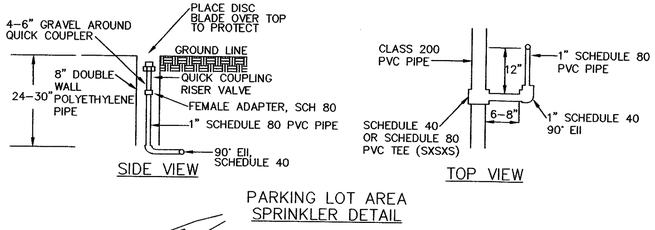

PARKING LOT AREA SPRINKLER DETAIL

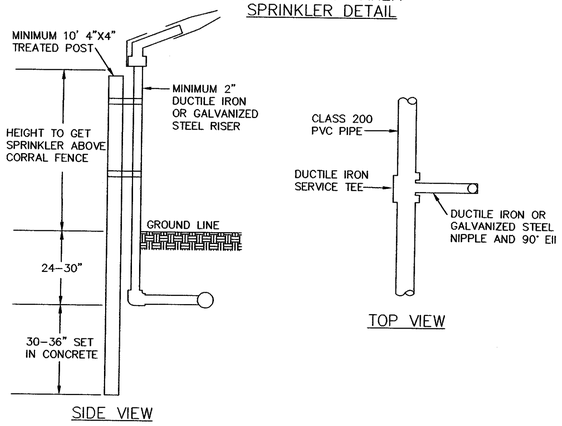

CORRAL SPRINKLER DETAIL

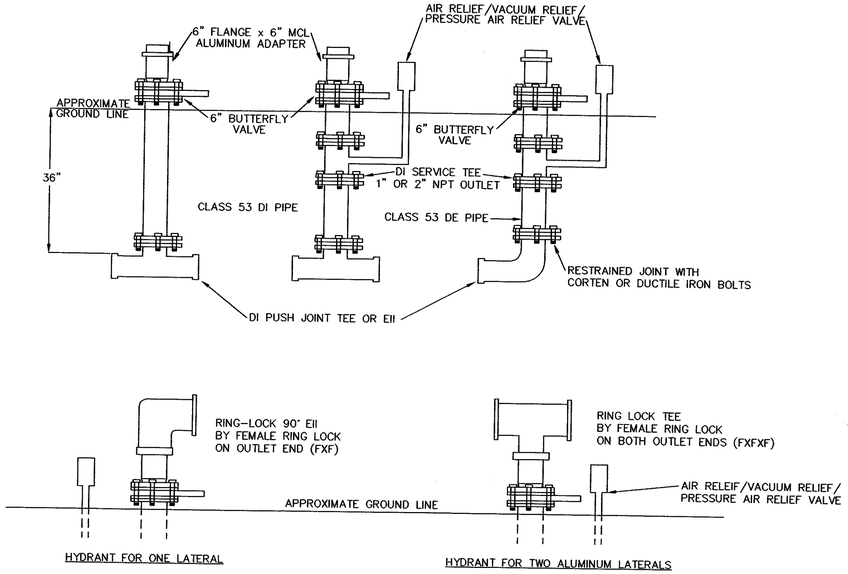

TYPICAL DESIGN OF HYDRANTS FOR CONNECTION TO ALUMINUM PIPE

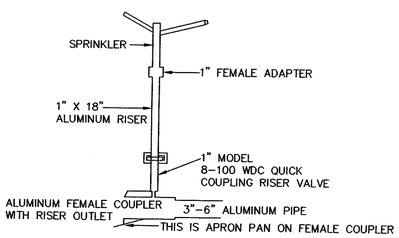

SPRINKLER RISER ON ABOVE GROUND ALUMINUM PIPE

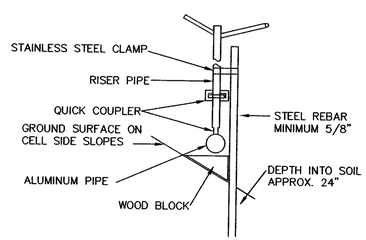

ALUMINUM PIPE AND RISERS ON SIDE SLOPES

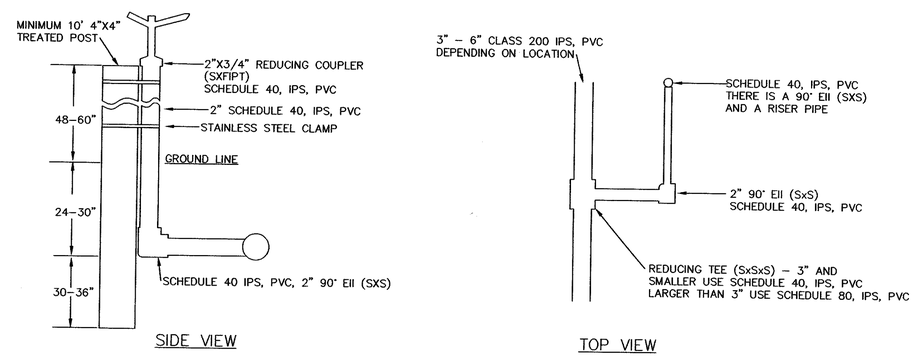

ROAD DUST CONTROL SPRINKLER DETAIL

REVISION INFORMATION				DRAWING INFORMATION		
Num	Description	Date	Init		Init	Date
				Drawn By:	SRM	06/01
				Checked By:	KCY	06/01
				Approved By:	RES	06/01
				SCALE: NOT TO SCALE		

NORTH CAROLINA PROFESSIONAL SEAL 14569 ENGINEER RONALD E. SNEED
April 15, 2002

Sprinkler Details

LANDFILL RECLAIMED EFFLUENT IRRIGATION SYSTEM

JOHNSTON COUNTY
Department of Public Utilities
P.O. Box 2263
Smithfield, NC 27577

SHEET
C7
of 8

CONSTRUCTION SEQUENCE

1. Obtain grading permit.
2. Install gravel construction pad, temporary diversions, silt fencing, sediment basins or other measures as shown on the approved plan. Clear only as necessary to install these devices.
3. Call for onsite inspection by Environmental Inspector and obtain Certification of Compliance.
4. Begin clearing and grubbing. Maintain devices as needed. Rough grade site.
5. Install storm sewer (if shown) and protect inlets with silt fencing, sediment traps or other approved measures as shown on the plan. Begin construction.
6. Stabilize site as areas are brought up to finish grade with vegetation paving, ditch linings, etc.
7. When construction is complete and all areas are stabilized completely, call for inspection by Environmental Inspector.
8. If site is approved, remove temporary diversions, silt fencing, sediment basins, etc., and seed out or pave any resulting bare areas. All remaining permanent erosion control devices (such as velocity dissipaters) should be installed now.
9. When vegetation has become established, call for final site inspection by Environmental Inspector.

SEEDBED PREPARATION

1. Chisel compacted areas and spread topsoil 3 inches deep over adverse soil conditions, if available.
2. Rip the entire area to 5 inches depth.
3. Remove all loose rock, roots, and other obstructions leaving surface reasonably smooth and uniform.
4. Apply agricultural lime, fertilizer, and super phosphate uniformly and mix with soil (see below).
5. Continue tillage until a well-pulverized, firm reasonably uniform seedbed is prepared 4 to 8 inches deep.
6. Seed on a freshly prepared seedbed and cover seed lightly with seeding equipment or cultipack after seeding.
7. Mulch immediately after seeding and anchor mulch.
8. Inspect all seeded areas and make necessary repairs or reseedings within the planting season, if possible. If stand should be over 60% damaged reestablish following original lime, fertilizer, and seeding rates.
9. Consult conservation inspector on maintenance treatment and fertilization after permanent cover is established.

* Apply:
Agricultural limestone - 2 tons/acre
or 3 tons/acre in clay soils
Fertilizer - 1000 lbs/acre (10-10-10)
Superphosphate - 500 lbs/acre (20%)
Mulch - 2 tons/acre (small grain straw)
Anchor - Asphalt emulsion at 450 gal/acre

PIEZOMETER CONSTRUCTION

Prior to beginning waste disposal operations, three (3) monitoring wells (named DWQ-MW-1, DWQ-MW-2, DWQ-MW-3) shall be installed to monitor groundwater quality. The wells shall be constructed such that the water level in the well is never above or below the screened (open) portion of the well at any time during the year. the well shall be minimum of 20 feet deep, with a 15 foot slotted screen. However, the screened portion of the well shall not extend into bedrock. There shall be a minimum of a 2-foot bentonite seal above the screened interval, and grouted to the surface, with a 2-inch minimum thick concrete pad around the well casing at ground surface extending at least 12-inches out from the well casing. The soil below the concrete pad shall be compacted prior to placement of the concrete pad. the general locations and name for each well is marked on sheets C3 and C4. Each monitoring well shall be constructed in accordance with this permit, and approved by the Raleigh Regional Office/Groundwater Section and by the Division of Waste management, Solid Waste Section/Hydrogeologist. Contractor shall contact Raleigh Regional Office/Groundwater Section (919) 571-4700and Division of Waste Management, Solid Waste Section/Hydrogeollogist (919) 733-0692 prior to construction of monitoring wells.

SEEDING SCHEDULE FOR STABILIZATION GRASS

SHOULDERS, SIDE DITCHES, SLOPES (MAX. 3:1)

DATE	TYPE	PLANTING RATE
AUG. 15 – NOV. 1	TALL FESCUE	300 LBS/ACRE
NOV. 1 – MAR. 1	TALL FESCUE & ABRUZZI RYE	300 LBS/ACRE 25 LBS/ACRE
MAR. 1 – APR. 15	TALL FESCUE	300 LBS/ACRE
APR. 15 – JUN. 30	HULLED COMMON BERMUDAGRASS	25 LBS/ACRE
JUL. 1 – AUG. 15	TALL FESCUE AND	120 LBS/ACRE
	*** BROWNTOP MILLET	35 LBS/ACRE
	*** OR SORGHUM – SUDAN HYBRIDS	30 LBS/ACRE

SHOULDERS, SIDE DITCHES, SLOPES (3:1 TO 2:1)

MAR. 1 – JUN. 1	SERICEA LESPEDEZA (SCARIFIED) &	50 LBS/ACRE
(MAR. 1 – APR. 15)	ADD TALL FESCUE	120 LBS/ACRE
(MAR. 1 – JUN. 30)	OR ADD WEEPING LOVERGRASS	10 LBS/ACRE
(MAR. 1 – JUN. 30)	OR ADD HULLED COMMON BERMUDAGRASS	25 LBS/ACRE
JUN. 1 – SEP. 1	*** TALL FESCUE AND	120 LBS/ACRE
	*** BROWNTOP MILLET	35 LBS/ACRE
	*** OR SORGHUM – SUDAN HYBRIDS	30 LBS/ACRE
SEP. 1 – MAR. 1	SERICEA LESPEDEZA (UNHULLED – UNSCARIFIED) AND TALL FESCUE	70 LBS/ACRE 120 LBS/ACRE
NOV. 1 – MAR. 1	ADD ABRUZZI RYE	25 LBS/ACRE

CONSULT CONSERVATION ENGINEER OR SOIL CONSERVATION SERVICE FOR ADDITIONAL IN-FORMATION CONCERNING OTHER ALTERNATIVES FOR VEGETATION OF DENUDED AREAS. THE ABOVE VEGETATION RATES ARE THOSE WHICH DO WELL UNDER LOCAL CONDITIONS. OTHER SEEDING RATE COMBINATIONS ARE POSSIBLE.

*** TEMPORARY -- RESEED ACCORDING TO OPTIMUM SEASON FOR DESIRED PERMANENT VEGETATION. DO NOT ALLOW TEMPORARY COVER TO GROW OVER 12" IN HEIGHT BEFORE MOWING,OTHERWISE FESCUE MAY BE SHADED OUT.

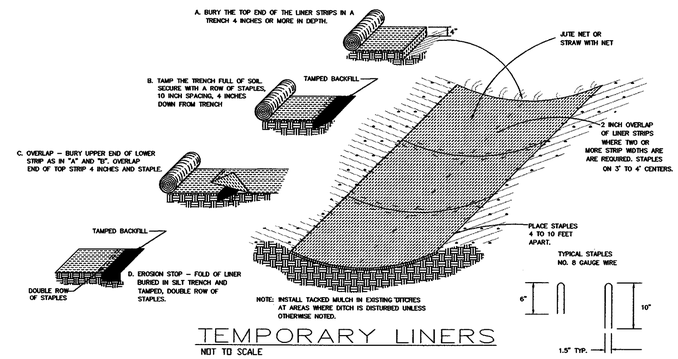

TEMPORARY LINERS
NOT TO SCALE

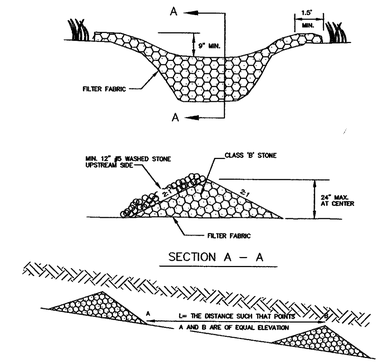

NOTES:
(1) STONE SHOULD BE PLACED OVER THE CHANNEL BANKS TO KEEP WATER FROM CUTTING AROUND THE DAM.
(2) STONE CHECK DAMS SHOULD BE SPACED IN A CHANNEL SO THAT THE CREST OF THE DOWNSTREAM DAM IS AT THE SAME ELEVATION OF THE TOE OF UPSTREAM DAM.

STONE CHECK DAM DETAIL
NOT TO SCALE

NOTES:
1. CONCRETE SHALL BE 3,000 PSI MIN.
2. CONCRETE FOR THRUST BLOCKING SHALL BE KEPT FAIRLY DRY, THUS MAKING THE CONCRETE MEDIUM SHAPE, MORE EASILY FORMED WITH THE MIDEST PART (BLOCKING AREA) AGAINST UNDISTURBED SOIL.
3. NO CONCRETE SHALL COVER ANY BOLTS OR GLANDS.
4. ALL FITTING AND ACCESSORIES TO BE WRAPPED WITH 10 MIL POLYETHYLENE PRIOR TO POURING BLOCKING.
5. VOLUME OF THRUST BLOCKING SHALL BE AS SHOWN ON THE THRUST BLOCKING SCHEDULE.

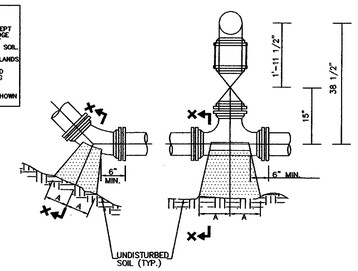

PLAN BENDS PLAN TEES

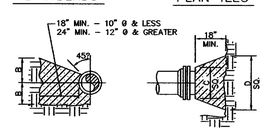

SECTION X–X BENDS & TEES PLAN & ELEV. PLUGS

PIPE SIZE	90° BEND		45° BEND		22 1/2° BEND		11 1/4° BEND		TEE		PLUG	
	A	B	A	B	A	B	A	B	A	B	C	D
4"	8"	12"	8"	8"	6"	6"	6"	6"	8"	9"	10"	16"
6"	10"	12"	8"	10"	8"	8"	8"	8"	10"	10"	12"	18"
8"	15"	13"	10"	10"	8"	8"	8"	8"	10"	12"	12"	24"
10"	16"	14"	10"	12"	8"	10"	8"	10"	11"	14"	14"	25"
12"	20"	16"	12"	14"	8"	12"	8"	12"	14"	16"	16"	30"
14"	22"	18"	14"	16"	10"	14"	10"	14"	16"	18"	18"	34"
16"	26"	20"	16"	18"	12"	16"	12"	16"	18"	20"	20"	36"

THRUST BLOCK DETAIL
NOT TO SCALE

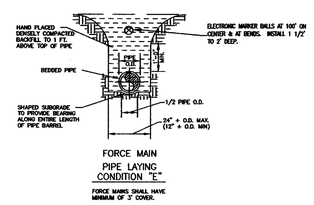

FORCE MAIN PIPE LAYING CONDITION "E"

FORCE MAINS SHALL HAVE MINIMUM OF 3' COVER.

PIPE LAYING DETAIL
NOT TO SCALE

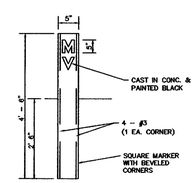

VALVE MARKER DETAIL
NOT TO SCALE

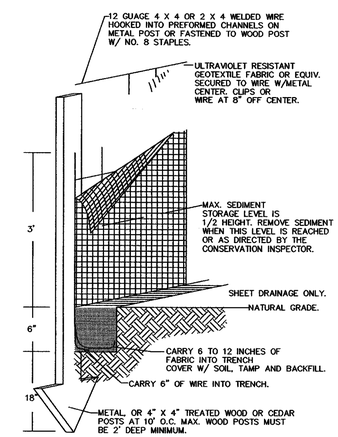

NOTE:
SILT FENCES SHOULD NOT BE USED AT PIPE OUTLETS OR IN AREAS OF CONCENTRATED FLOWS (CREEKS, DITCHLINES, SWALES ETC.).

SILT FENCE DETAIL
NOT TO SCALE

REVISION INFORMATION				DRAWING INFORMATION		
Num	Description	Date	Init		Init	Date
				Drawn By:	SRM	06/01
				Checked By:	KCY	06/01
				Approved By:	RES	06/01
				SCALE: Hor. 1" = 50'		

NORTH CAROLINA PROFESSIONAL ENGINEER SEAL RONALD E. SNIDER April 15, 2002

Underground Pipe and Erosion Control Details

LANDFILL RECLAIMED EFFLUENT IRRIGATION SYSTEM

JOHNSTON COUNTY
Department of Public Utilities
P.O. Box 2263
Smithfield, NC 27577

SHEET
C8
of 8

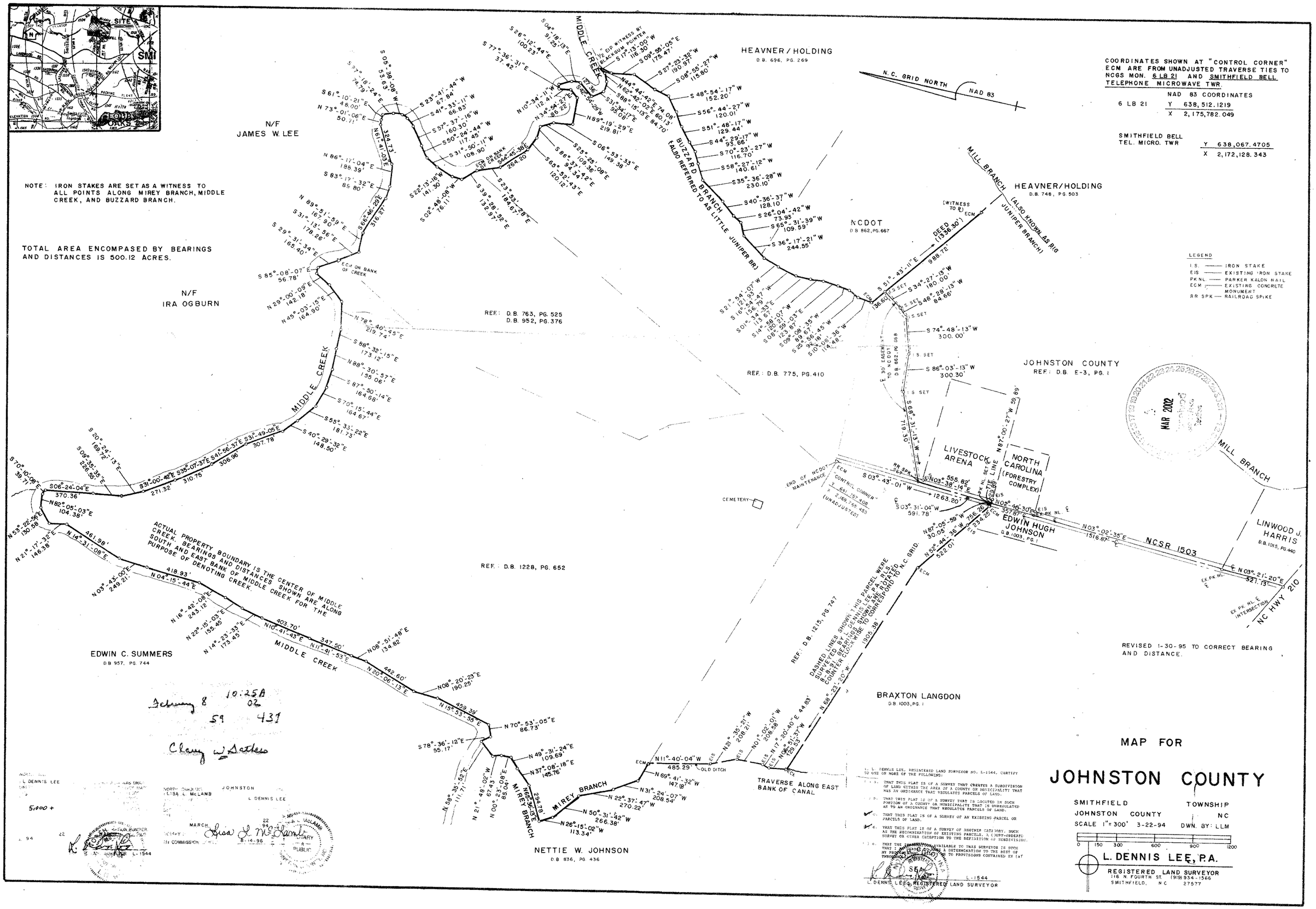

NOTE: IRON STAKES ARE SET AS A WITNESS TO ALL POINTS ALONG MIREY BRANCH, MIDDLE CREEK, AND BUZZARD BRANCH.

TOTAL AREA ENCOMPASED BY BEARINGS AND DISTANCES IS 500.12 ACRES.

COORDINATES SHOWN AT "CONTROL CORNER" ECM ARE FROM UNADJUSTED TRAVERSE TIES TO NCGS MON. S LB 21 AND SMITHFIELD BELL TELEPHONE MICROWAVE TWR.

	NAD 83 COORDINATES	
6 LB 21	Y	638,512.1219
	X	2,175,782.049

SMITHFIELD BELL TEL. MICRO. TWR

Y	638,067.4705
X	2,172,128.343

LEGEND

I.S.	IRON STAKE
EIS	EXISTING IRON STAKE
PK NL	PARKER KALON NAIL
ECM	EXISTING CONCRETE MONUMENT
RR SPK	RAILROAD SPIKE

February 8 10:25A 02

59 431

Cheryl W. Sothers

L. DENNIS LEE, REGISTERED LAND SURVEYOR NO. L-1544, CERTIFY TO ONE OF MORE OF THE FOLLOWING:

1. THAT THIS PLAT IS OF A SURVEY THAT CREATES A SUBDIVISION OF LAND WITHIN THE AREA OF A COUNTY OR MUNICIPALITY THAT HAS AN ORDINANCE THAT REGULATES PARCELS OF LAND.
2. THAT THIS PLAT IS OF A SURVEY THAT IS LOCATED IN SUCH PORTION OF A COUNTY OR MUNICIPALITY THAT IS UNREGULATED AS TO AN ORDINANCE THAT REGULATES PARCELS OF LAND.
3. THAT THIS PLAT IS OF A SURVEY OF AN EXISTING PARCEL OR PARCELS OF LAND.
4. THAT THIS PLAT IS OF A SURVEY OF ANOTHER CATEGORY, SUCH AS THE RECOMBINATION OF EXISTING PARCELS, A COURT-ORDERED SURVEY OR OTHER EXCEPTION TO THE DEFINITION OF SUBDIVISION.
5. THAT THE [illegible] AVAILABLE TO THIS SURVEYOR IS SUCH THAT I [illegible] A DETERMINATION TO THE BEST OF MY PROFESSIONAL JUDGMENT TO PROVISIONS CONTAINED IN [illegible] THROUGH [illegible]

SEAL L-1544

L. DENNIS LEE, REGISTERED LAND SURVEYOR

MAP FOR

JOHNSTON COUNTY

SMITHFIELD TOWNSHIP
JOHNSTON COUNTY NC
SCALE 1"=300' 3-22-94 DWN. BY: LLM

0 150 300 600 900 1200

L. DENNIS LEE, P.A.
REGISTERED LAND SURVEYOR
116 N FOURTH ST (919) 934-1566
SMITHFIELD, N C 27577

(24x36) 41.3

02-001

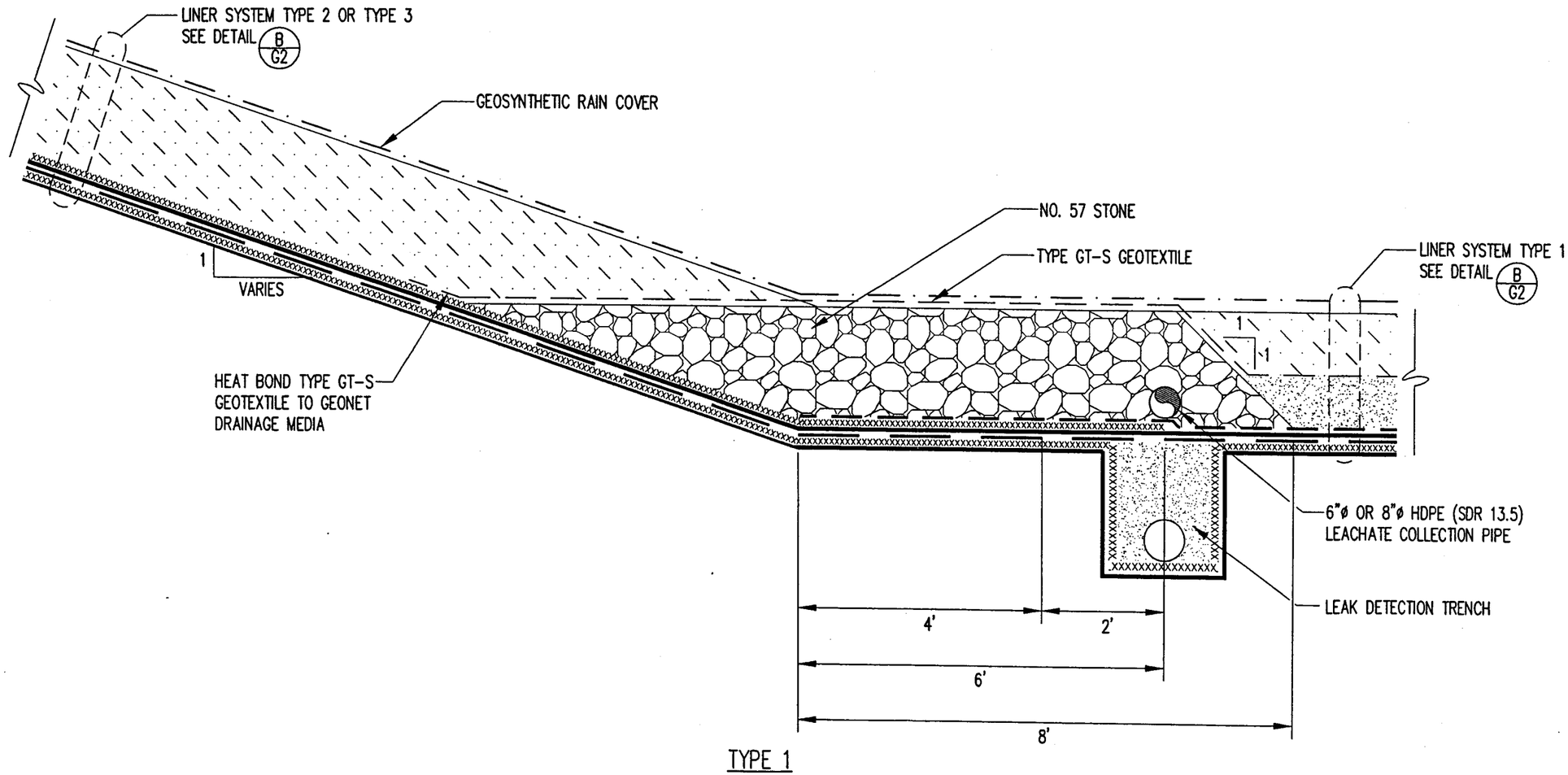

TYPE 1

REVISED TYPE 1 GRAVEL COLUMN CROSS SECTION

DETAIL 1/–

SCALE: 1"= 2'

0 2' 4' 6'

G.N. RICHARDSON & ASSOCIATES, INC.
Engineering and Geological Services
425 N. Boylan Avenue Raleigh, North Carolina
(919)-828-0577 Fax:(919)-828-3899 www.gnra.com

FIGURE NO.	1
FILE NAME	JOHN-B0261
SCALE:	AS SHOWN
PROJECT NO.	JOHN-14
CHECKED BY:	P.K.S.
DATE:	JULY 2002
DRAWN BY:	C.T.J.

TITLE: PROPOSED MODIFICATION TO TYPE 1 GRAVEL COLUMNS

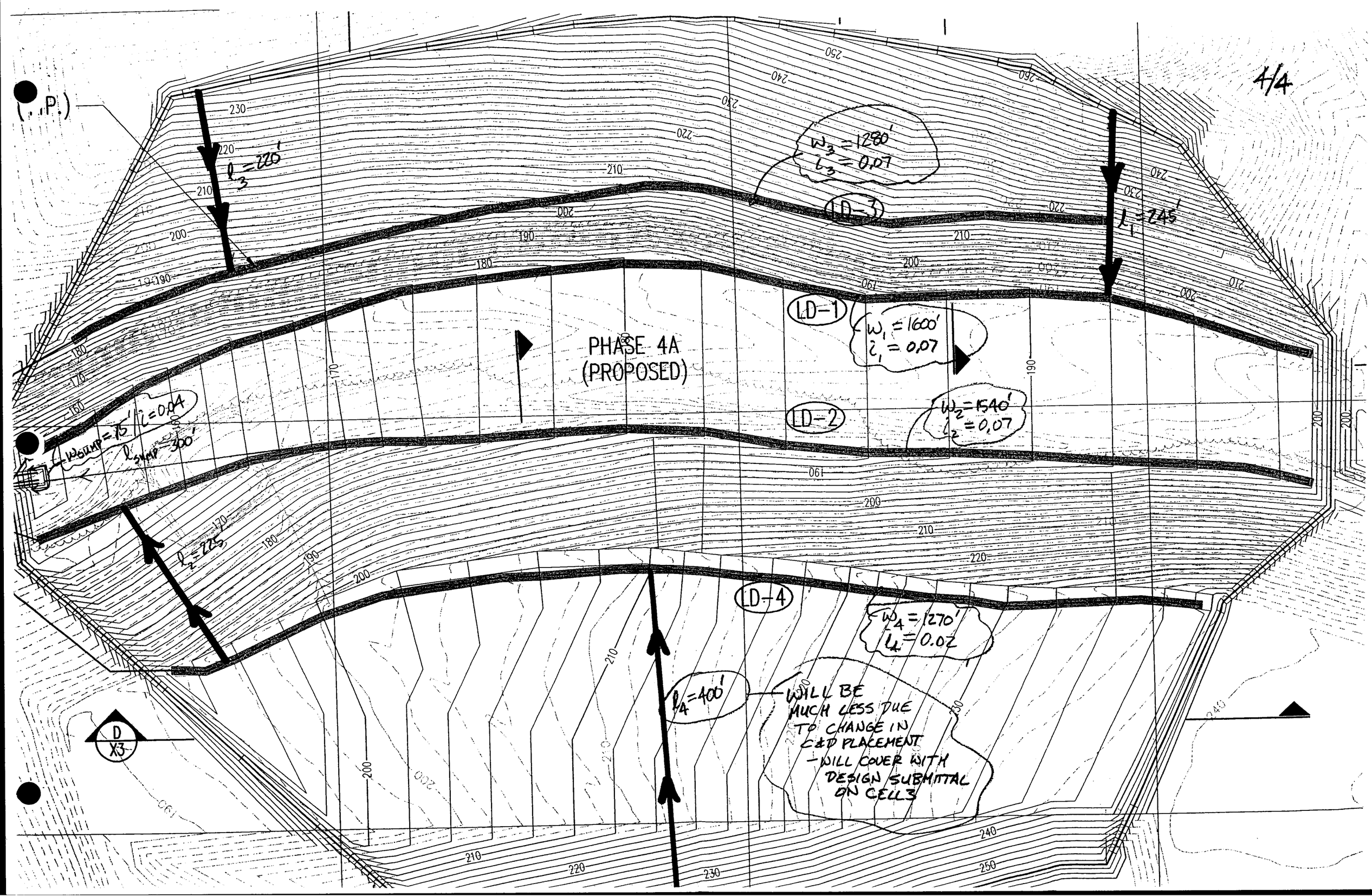
PHASE 4A
(PROPOSED)
LD-1
LD-2
LD-3
LD-4
$w_1 = 1600'$
$i_1 = 0.07$
$w_2 = 1540'$
$i_2 = 0.07$
$w_3 = 1280'$
$i_3 = 0.07$
$w_4 = 1270'$
$i_4 = 0.02$
$l_1 = 245'$
$l_2 = 225'$
$l_3 = 220'$
$l_4 = 400'$
$w_{SUMP} = 15'$
$i = 0.04$
$l_{SUMP} = 300'$
WILL BE MUCH LESS DUE TO CHANGE IN C&D PLACEMENT
- WILL COVER WITH DESIGN SUBMITTAL ON CELL 3
D
X3

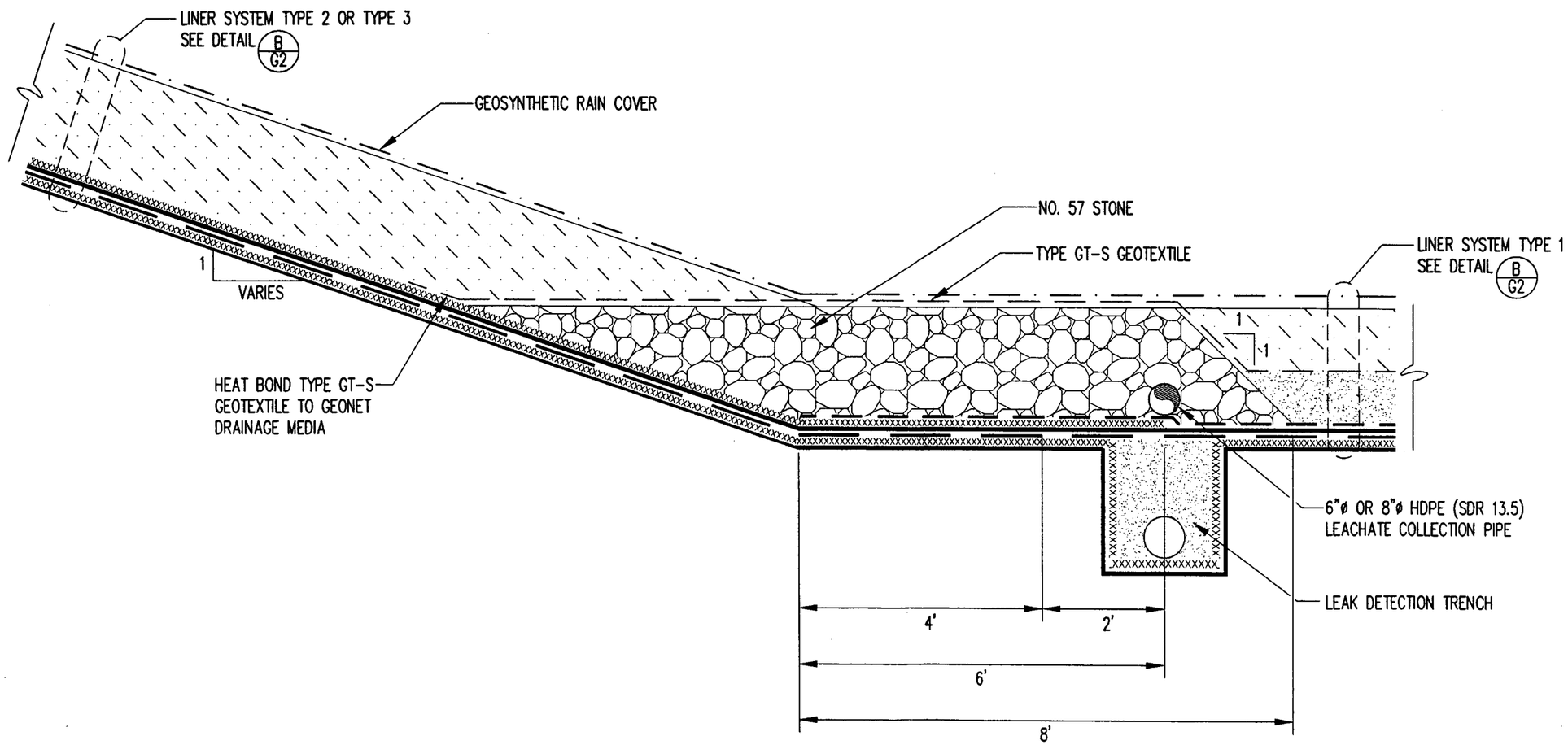

TYPE 1

REVISED TYPE 1 GRAVEL COLUMN CROSS SECTION

DETAIL 1/–
SCALE: 1"= 2'

0 2' 4' 6'

G.N. RICHARDSON & ASSOCIATES, INC.
Engineering and Geological Services
425 N. Boylan Avenue Raleigh, North Carolina
(919)-828-0577 Fax:(919)-828-3899 www.gnra.com

FIGURE NO.	1
FILE NAME	JOHN-B0261
SCALE:	AS SHOWN
PROJECT NO.	JOHN-14
CHECKED BY:	P.K.S.
DATE:	JULY 2002
DRAWN BY:	C.T.J.

TITLE: PROPOSED MODIFICATION TO TYPE 1 GRAVEL COLUMNS

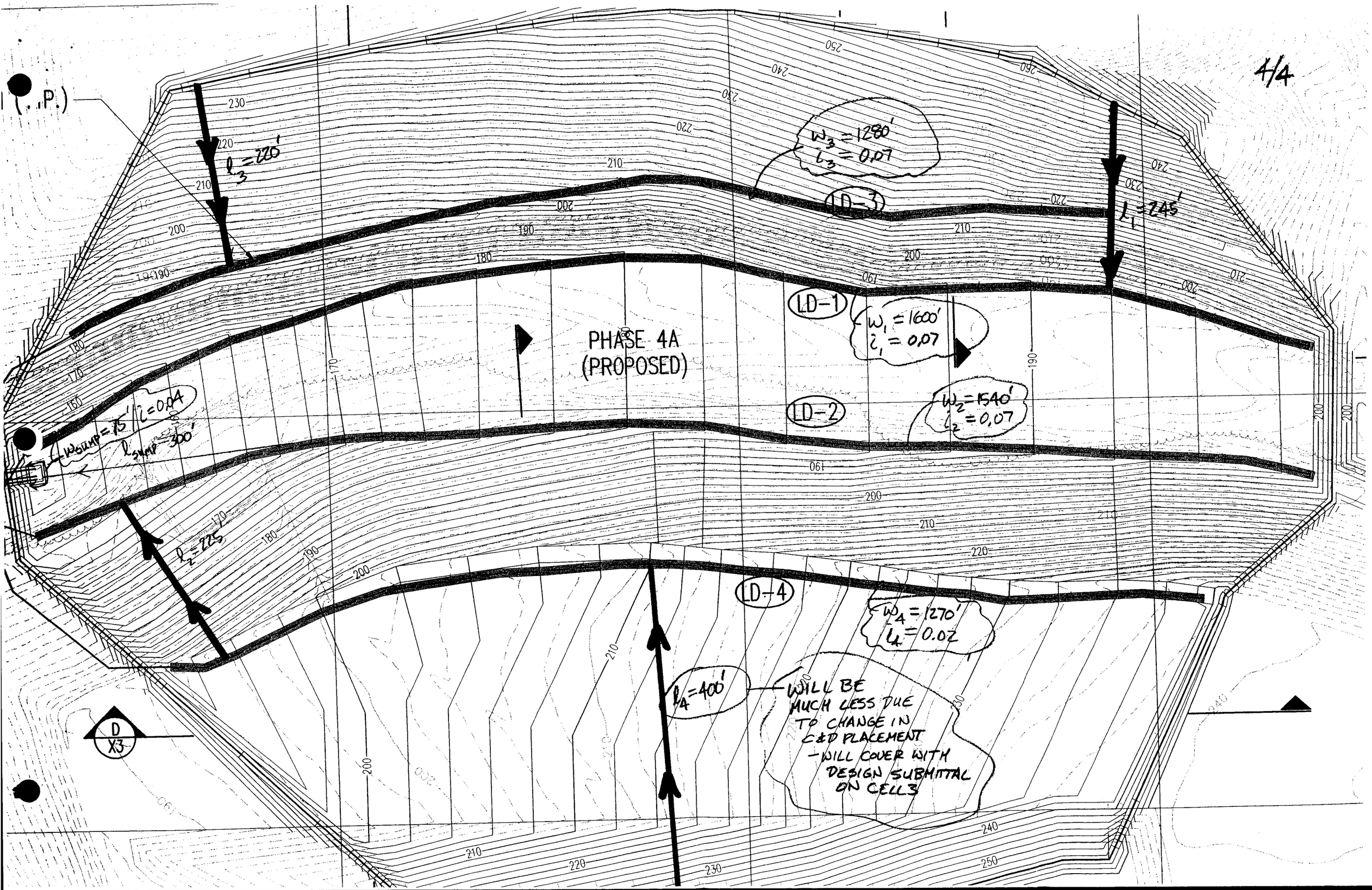
PHASE 4A
(PROPOSED)
LD-1
$w_1 = 1600'$
$i_1 = 0.07$
LD-2
$w_2 = 1540'$
$i_2 = 0.07$
LD-3
$w_3 = 1280'$
$i_3 = 0.07$
LD-4
$w_4 = 1270'$
$i_4 = 0.02$
$l_1 = 245'$
$l_2 = 225$
$l_3 = 220'$
$l_4 = 400'$
$w_{SUMP} = 15'$ $i = 0.04$
$l_{SUMP} = 300'$
WILL BE MUCH LESS DUE TO CHANGE IN C&D PLACEMENT – WILL COVER WITH DESIGN SUBMITTAL ON CELL 3
D
X3