RICHARDSON SMITH GARDNER & ASSOCIATES
Engineering and Geological Services

November 6, 2007

Ms. Donna Wilson
NC DENR - Division of Waste Management
401 Oberlin Road, Suite 150
Raleigh, NC 27605

RE: Johnston County Landfill (Permit No. 51-03)
Permit Modification Request - Revised
Modification of Existing Leachate Storage Pond for use as Equalization Basin

Dear Donna:

On behalf of Johnston County, Richardson Smith Gardner & Associates, Inc. (RSG) would like to submit this revised permit modification request for the modification of the existing leachate storage pond for use as an equalization basin for raw wastewater. Attached to this letter request is a copy of design plans and description (titled "Amendment 1") prepared by Dewberry & Davis, Inc. (Dewberry) which describe the proposed improvements from a wastewater perspective.

Existing Leachate Storage Pond

The existing leachate storage pond has an approximate capacity of 4.2M gallons with 2 feet of freeboard. This lined storage pond was constructed in 1998 in conjunction with the construction of the site's initial Subtitle D landfill unit (Phase 5). Due to the large size of the pond and typical leachate generation at the site (between 1.26M and 3.05M gallons per year based on 2004 and 2005 data), the capacity of this pond has been very much underutilized.

Modified Capacity for Leachate Storage

As shown in the Dewberry plans (reference detail for "New 6' x 4' Vault" on Sheet C3), the maximum water level in the basin will be maintained at approximately elevation 151 to 152. With a top of basin elevation of approximately 155, this will provide a volume of at least 1 foot (approximately 650,000 gallons) below the required 2 feet of freeboard under typical conditions. This capacity is much greater than the anticipated 300,000 surge volume from a newly operational landfill unit (reference C&D Landfill - Area 2 Cell 1 Permit to Construct). Additionally, considering the very large pumping capacity (two 1,300 GPM pumps) of the existing raw sewage pump station which will be connected to the pond, the ability to handle leachate generation at the site is very high.

The modified capacity and/or operation of the leachate pond as an equalization basin will not affect the County's ability to draw-down the basin in advance of predicted heavy rainfall (tropical storm, hurricane, etc.).

Layout of Facility

The layout of the proposed modifications will be on the southwest side of the existing leachate pond as shown on Dewberry Sheet C 1.01. This location was selected to minimize the impact to the future landfill footprint in this vicinity. Thus, no change to the permitted landfill capacity is anticipated as the result of this modification request.

Leachate Recirculation

In that leachate and wastewater will be allowed to mix in the basin, additional modifications as described in Dewberry's Amendment 1 will be required in order to restart leachate recirculation in the future. The additional modifications involve the addition of a pump station along the existing 8" diameter HDPE gravity pipe and an above ground storage tank (with secondary containment tank). The pump station will be sufficiently upslope of the basin such that it will be protected from any potential mixing of leachate and wastewater. The pump station will pump to the above ground tank located on the southwest side of the proposed improvements.

Should you have any questions or comments on this submittal or require further information, please contact me at your earliest convenience.

Sincerely,
Richardson Smith Gardner & Associates, Inc.

NORTH CAROLINA PROFESSIONAL SEAL 021666 ENGINEER PIETER K. SCHEER 11/6/07

Pieter K. Scheer, P.E.
Project Manager

Attachment: Landfill Equalization Basin Study - Amendment 1 (Dewberry)
Johnston County Landfill Equalization Facility Drawings (Dewberry)

cc: Tim Broome, P.E., Johnston County
Haywood Phthisic, Johnston County
Rick Proctor, Johnston County
Amanda Bader, P.E., Dewberry

Landfill Equalization Basin Study
Johnston County, North Carolina

Amendment No. 1

October 23, 2007

NORTH CAROLINA PROFESSIONAL SEAL 026917 ENGINEER AMANDA LEE BADER

10/23/07

This amendment has been prepared to clarify the work proposed in the initial phase of construction for the Landfill Equalization Basin.

The landfill leachate collection basin is part of the landfill leachate collection system which includes collection piping, a pump station (including a recirculation pump), and recirculation piping. The recirculation system is designed only for the MSW Phase 5 landfill unit at this time. The system is currently not used due to potential for leachate breakout on the landfill slopes. Leachate recirculation is being discontinued until the Phase 5 recirculation system is improved to minimize the potential for breakouts or a recirculation system is designed and permitted for another disposal unit.

In this initial phase, the existing leachate holding basin will be converted into a raw wastewater flow equalization basin which will receive and pretreat leachate.
The proposed improvements include:

- (1) New mechanical screen (fine–¼ ", 6 mm) and screening compactor
- Piping modifications
- Modifications of controls at the existing raw sewerage pump station

Generally leachate will flow directly to the equalization basin. This flow will be combined in the basin with screened wastewater flow. No leachate will be re-circulated back into the landfill. The existing leachate gravity line will be extended to the leachate pump station. This line will allow flexibility for leachate to flow directly to the leachate pump station and bypass the equalization basin for emergency operation. The leachate pump station will have an overflow line.

If the County desires to re-circulate leachate in the future, the County will add an in-line pump station along the existing 8" diameter HDPE gravity line and an above ground storage tank. The pump station will be installed in-line below the manhole where flow from the MSW Phase 4A and C&D Area 2 landfill units enters the gravity main and above the elevation of 156 for the pipe invert (see Figure A-1, provided by RSG). In this location, leachate can be captured without worry of mixing with wastewater in that the top of the equalization basin is at approximately elevation 155.

Richardson, Smith, Gardner & Associates (RSG) has advised Dewberry that the landfill typically generates leachate at a rate of 100 to 500 gallons per acre per day (or 5,000 to 27,000 gallons for the 53 acres of lined disposal area currently). Under storm surge conditions, the landfill could produce approximately 300,000 gallons of leachate in a day.

The leachate storage tank will be an 11-foot diameter by 15-foot tall bolted steel tank (nominal capacity = 10,000 gallons) inside a 20-foot diameter by 5.5-foot tall secondary containment bolted steel tank (nominal capacity = 12,000 gallons). Both tanks will be Aquastore brand factory coated glass-fused-to-steel, bolt together tank systems as manufactured by Engineered Storage Products Company, Inc. of Dekalb, Illinois, or approved equal. The primary tank will have a glass coated bolted steel floor placed

over a concrete slab. The secondary tank will have a reinforced concrete floor. Both tanks will be installed on reinforced concrete foundations.

The future leachate pump station will have an overflow back into the existing gravity pipe. The future storage tank would have an overflow to the existing leachate pump station.

P:\50003959\Adm\Reports\Amendment to PER_10.23.07.doc

FIGURE A-1

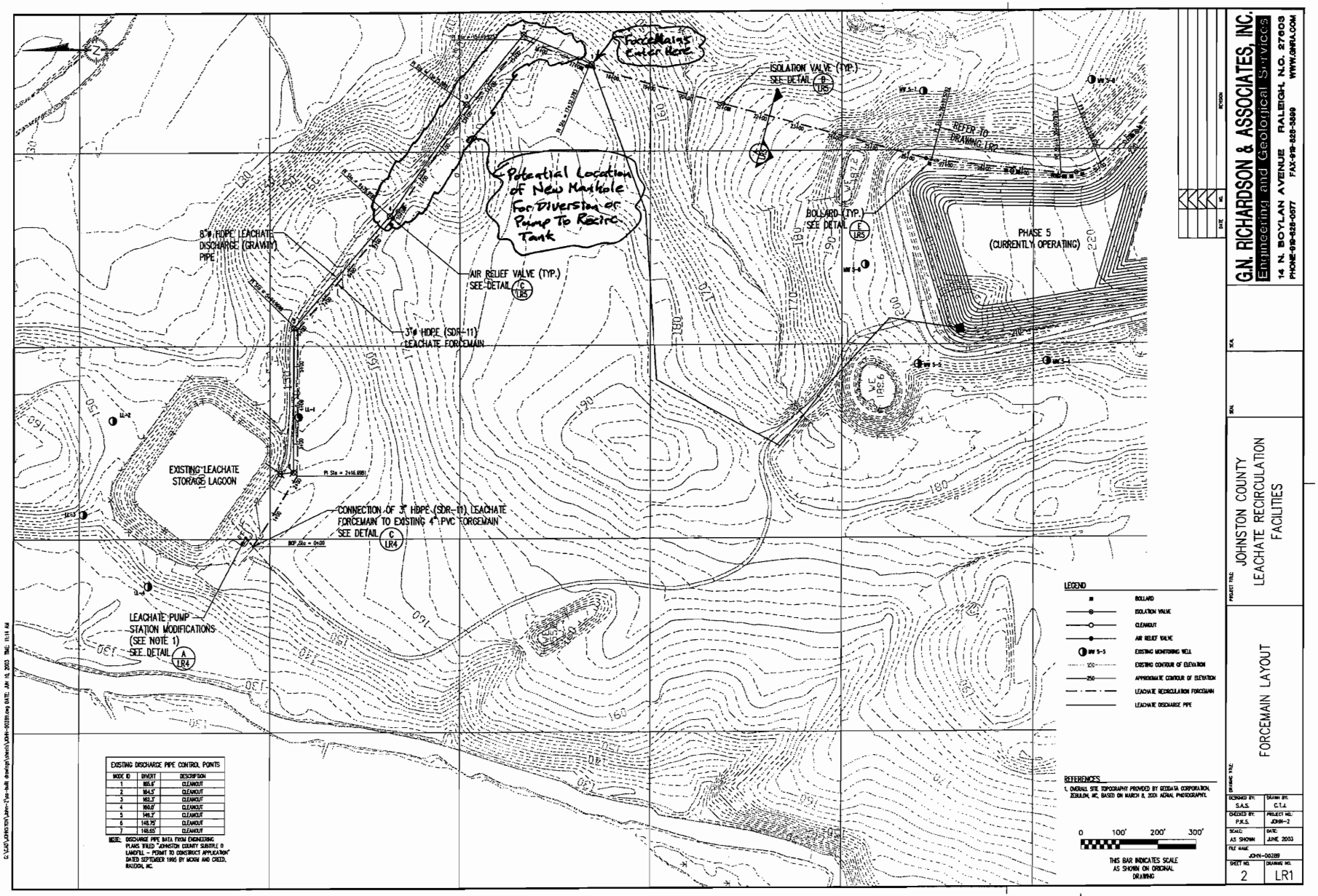

EXISTING DISCHARGE PIPE CONTROL POINTS		
NODE ID	INVERT	DESCRIPTION
1	165.6'	CLEANOUT
2	164.5'	CLEANOUT
3	162.3'	CLEANOUT
4	160.0'	CLEANOUT
5	149.2'	CLEANOUT
6	148.75'	CLEANOUT
7	148.65'	CLEANOUT

NOTE: DISCHARGE PIPE DATA FROM ENGINEERING PLANS TITLED "JOHNSTON COUNTY SUBTITLE D LANDFILL – PERMIT TO CONSTRUCT APPLICATION" DATED SEPTEMBER 1995 BY MORN AND CREED, RALEIGH, NC.

JOHNSTON COUNTY
LANDFILL EQUALIZATION FACILITY

JOHNSTON COUNTY
NORTH CAROLINA
OCTOBER 2007

BOARD OF COMMISSIONERS

COOKIE POPE, CHAIRMAN
WADE M. STEWART, VICE CHAIRMAN
ALLEN L. MIMS JR.
JEFFREY P. CARVER
W. RAY WOODALL
DEVAN BARBOUR
TONY BRASWELL

COUNTY MANAGER

RICK J. HESTER

CLERK TO THE BOARD

PAULA WOODARD

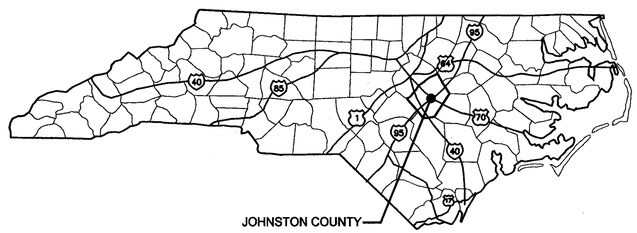

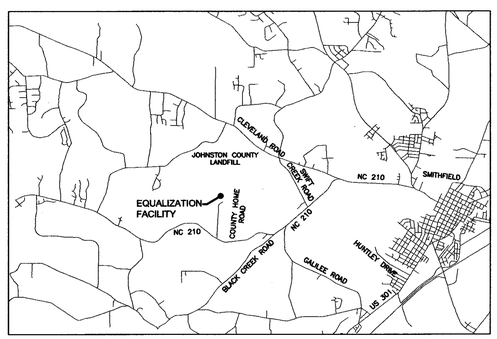

LOCATION MAP

OWNER - JOHNSTON COUNTY
RICK J. HESTER, COUNTY MANAGER

SHEET INDEX

SHEET NO.	DESCRIPTION
T1	TITLE SHEET
T2	GENERAL NOTES & EXISTING CONDITIONS
C1.01	SITE PLAN
C1.02	SITE PLAN
C2	GRIT COLLECTOR SECTIONS AND DETAILS
C3	VALVE VAULT, PIPING MODIFICATIONS, AND DETAILS
C4	MISCELLANEOUS DETAILS
S1	GENERAL STRUCTURAL NOTES AND DETAILS
S2	HEADWORKS FOUNDATION PLAN
S3	HEADWORKS SECTIONS AND DETAILS
S4	HEADWORKS SECTIONS AND DETAILS
E1	ELECTRICAL SITE PLAN

Dewberry

Dewberry & Davis, Inc.
2301 REXWOODS DRIVE
SUITE 200
RALEIGH, NC 27607
PHONE: 919.881.9939
FAX: 919.881.9923

JOHNSTON COUNTY
LANDFILL
EQUALIZATION FACILITY
JOHNSTON COUNTY, NC

SEAL

KEY PLAN

FINAL DRAWING
NOT RELEASED FOR CONSTRUCTION

SCALE

No.	DATE	BY	Description

REVISIONS

DRAWN BY	JRG
APPROVED BY	ALB
CHECKED BY	ALB
DATE	OCTOBER, 2007

TITLE

TITLE SHEET

PROJECT NO. 50003959

T1

SHEET NO. 1 OF 12

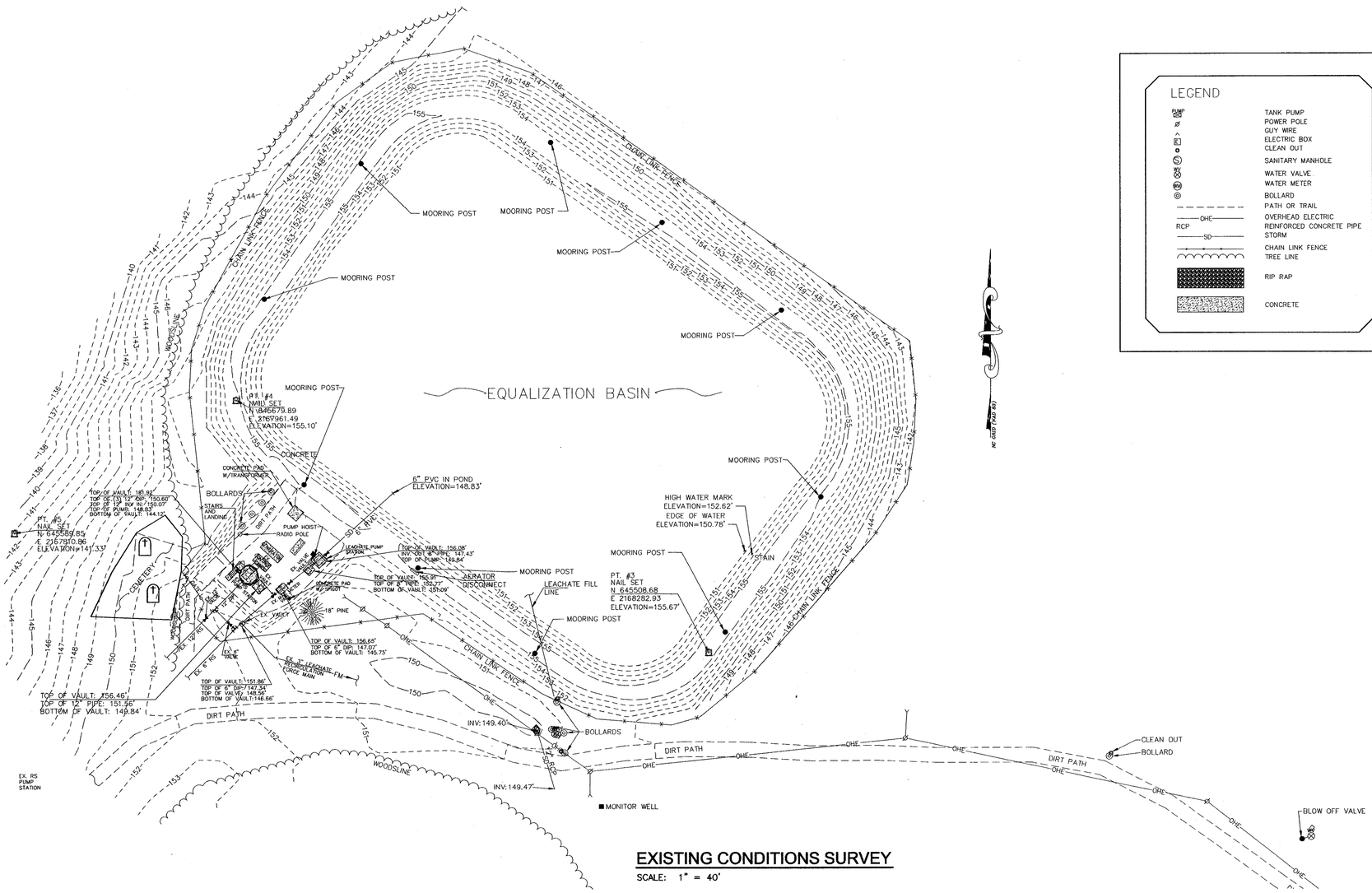

EXISTING CONDITIONS SURVEY

SCALE: 1" = 40'

LEGEND

PUMP	TANK PUMP
	POWER POLE
	GUY WIRE
	ELECTRIC BOX
	CLEAN OUT
	SANITARY MANHOLE
	WATER VALVE
	WATER METER
	BOLLARD
	PATH OR TRAIL
OHE	OVERHEAD ELECTRIC
RCP	REINFORCED CONCRETE PIPE
SD	STORM
	CHAIN LINK FENCE
	TREE LINE
	RIP RAP
	CONCRETE

NOTES:

1. HORIZONTAL (NAD 83) AND VERTICAL CONTROL (NAVD 88) IS NC GRID OBTAINED BY VRS, GPS OBSERVATIONS.

GENERAL NOTES

1. THE CONTRACTOR SHALL HAVE A COMPLETE SET OF CONTRACT DOCUMENTS AS WELL AS ALL APPROVALS ON THE JOB SITE AT ALL TIMES.

2. ALL UNDERGROUND UTILITIES SHOWN ARE APPROXIMATE LOCATION. IT IS POSSIBLE THAT ALL EXISTING UTILITIES HAVE NOT BEEN SHOWN ON THE DRAWINGS. CONTRACTOR TO VERIFY DEPTH, LOCATION, SIZE AND MATERIAL OF ALL EXISTING UTILITIES PRIOR TO THE START OF CONSTRUCTION. CONTRACTOR TO CALL NC ONE CALL (1-800-632-4949) AND JOHNSTON COUNTY PUBLIC UTILITIES (919-989-5075) A MINIMUM OF 48 HOURS PRIOR TO START OF CONSTRUCTION.

3. CONTRACTOR SHALL MAKE EVERY EFFORT TO SAVE PROPERTY IRONS, MONUMENTS, OTHER PERMANENT POINTS AND LINES OF REFERENCE AND CONSTRUCTION STAKES. PROPERTY IRONS, MONUMENTS, AND OTHER PERMANENT POINTS OF REFERENCE DESTROYED BY THE CONTRACTOR SHALL BE REPLACED BY A LICENSED LAND SURVEYOR AT THE CONTRACTOR'S EXPENSE.

4. CONTRACTOR SHALL VERIFY ALL DIMENSIONS, CONDITIONS, EXISTING INVERTS, ELEVATIONS ETC. BEFORE BEGINNING ANY WORK AND NOTIFY ENGINEER IN WRITING OF ANY DISCREPANCIES PRIOR TO CONTINUING CONSTRUCTION OF THE WORK INVOLVED.

5. ALL PIPE FITTINGS HAVE NOT BEEN SHOWN. CONTRACTOR SHALL PROVIDE / INSTALL ALL FITTINGS, FLEXIBLE COUPLINGS, JOINT RESTRAINT, THRUST BLOCKING, ETC. NECESSARY FOR COMPLETE INSTALLATION. PROVIDE CLEARANCES AS NEEDED FOR FUTURE ACCESSIBILITY.

6. ALL PIPE, 8"ø AND LARGER, EXCEPT WHERE INDICATED, SHALL BE DUCTILE IRON, PUSH-ON JOINT.

7. TOPOGRAPHIC SURVEY PERFORMED BY DEWBERRY AND DAVIS, INC, DATED AUGUST 16, 2007.

8. THE CONTRACTOR SHALL MAINTAIN SEPARATION BETWEEN SEWERS AND WATER MAINS AS FOLLOWS:
   A. LATERAL SEPARATION OF SEWERS AND WATER MAINS: RECLAIMED WATER SHALL BE TREATED AS SEWER LINES. WATER MAINS SHALL BE LAID AT LEAST 10' LATERALLY FROM EXISTING OR PROPOSED SEWERS, UNLESS LOCAL CONDITIONS OR BARRIERS PREVENT A 10' LATERAL SEPARATION, IN WHICH CASE:
      1. THE WATER MAIN IS LAID IN A SEPARATE TRENCH, WITH THE ELEVATION OF THE BOTTOM OF THE WATER MAIN AT LEAST 18" ABOVE THE TOP OF THE SEWER, OR
      2. THE WATER MAIN IS LAID IN THE SAME TRENCH AS THE SEWER WITH THE WATER MAIN LOCATED AT ONE SIDE OF A BENCH OF UNDISTURBED EARTH, AND WITH THE ELEVATION OF THE BOTTOM OF THE WATER MAIN AT LEAST 18" ABOVE THE TOP OF THE SEWER.
   B. CROSSING A WATER MAIN OVER A SEWER: WHENEVER IT IS NECESSARY FOR A WATER MAIN TO CROSS OVER A SEWER, THE WATER MAIN SHALL BE LAID AT SUCH AN ELEVATION THAT THE BOTTOM OF THE WATER MAIN IS 18" ABOVE THE TOP OF THE SEWER, UNLESS LOCAL CONDITIONS OR BARRIERS PREVENT 18" VERTICAL SEPARATION, IN WHICH CASE BOTH WATER MAIN AND SEWER SHALL BE CONSTRUCTED OF FERROUS MATERIALS AND WITH JOINTS THAT ARE EQUIVALENT TO WATER MAIN STANDARDS FOR A DISTANCE OF 10' ON EACH SIDE OF THE POINT OF CROSSING.
   C. CROSSING A WATER MAIN UNDER A SEWER: WHENEVER IT IS NECESSARY FOR A WATER MAIN TO CROSS UNDER A SEWER, BOTH THE WATER MAIN AND THE SEWER SHALL BE CONSTRUCTED OF FERROUS MATERIALS AND WITH JOINTS EQUIVALENT TO WATER MAIN STANDARDS FOR A DISTANCE OF 10' ON EACH SIDE OF THE POINT OF CROSSING. A SECTION OF WATER MAIN SHALL BE CENTERED AT THE POINT OF CROSSING.

9. WHEN WORKING ADJACENT TO EXISTING STRUCTURES OR UTILITIES, CONTRACTOR SHALL USE WHATEVER METHODS NECESSARY TO PROTECT STRUCTURES AND UTILITIES FROM DAMAGE. REPLACEMENT OF STRUCTURES AND UTILITIES SHALL BE AT CONTRACTOR'S EXPENSE.

10. CONTRACTOR SHALL BE RESPONSIBLE FOR LAYOUT AND STAKING.

11. CONTRACTOR SHALL BE RESPONSIBLE FOR COATING EXISTING PIPE AND APPURTENANCES IN ACCORDANCE WITH SPECIFICATIONS WHERE CONNECTIONS HAVE BEEN MADE OR PIPING HAS BEEN RE-USED.

12. ALL IMPROVEMENTS UNDER THIS CONTRACT ARE ON PROPERTY OWNED BY JOHNSTON COUNTY.

13. IT IS THE CONTRACTOR'S RESPONSIBILITY TO ACCURATELY LOCATE BOTH HORIZONTALLY AND VERTICALLY ALL EXISTING UTILITIES PRIOR TO THE START OF CONSTRUCTION (ONE CALL CENTER 1-800-632-4949). COST TO REPAIR DAMAGED UTILITIES SHALL BE BORNE BY THE CONTRACTOR. EXISTING SANITARY SEWER AND WATER LINE SIZES PROVIDED BY JOHNSTON COUNTY UTILITIES. IT IS THE CONTRACTOR'S RESPONSIBILITY TO ACCURATELY LOCATE ALL UTILITIES.

14. ALL EXTERIOR EXPOSED DIP PIPING SHALL BE INSULATED.

15. THIS FACILITY IS AN OPERATIONAL PUMP STATION AND LEACHATE COLLECTION AND DISPOSAL FACILITY. CONTRACTOR SHALL TAKE MEASURES REQUIRED TO MAINTAIN CONTINUOUS OPERATION.

Dewberry

Dewberry & Davis, Inc.
2301 REXWOODS DRIVE
SUITE 200
RALEIGH, NC 27607
PHONE: 919.881.9939
FAX: 919.881.9923

JOHNSTON COUNTY
LANDFILL
EQUALIZATION FACILITY
JOHNSTON COUNTY, NC

SEAL

NORTH CAROLINA PROFESSIONAL SEAL ENGINEER MANYA LEE BAKER 9/28/07

KEY PLAN

FINAL DRAWING
NOT RELEASED FOR CONSTRUCTION

SCALE

HORIZONTAL GRAPHIC SCALE
0' 20' 40' 80'
1 INCH = 40 FT.

No.	DATE	BY	Description

REVISIONS

DRAWN BY	JRG
APPROVED BY	ALB
CHECKED BY	ALB
DATE	OCTOBER, 2007

TITLE
GENERAL NOTES & EXISTING CONDITIONS

PROJECT NO. 50003959

T2

SHEET NO. 2 OF 12

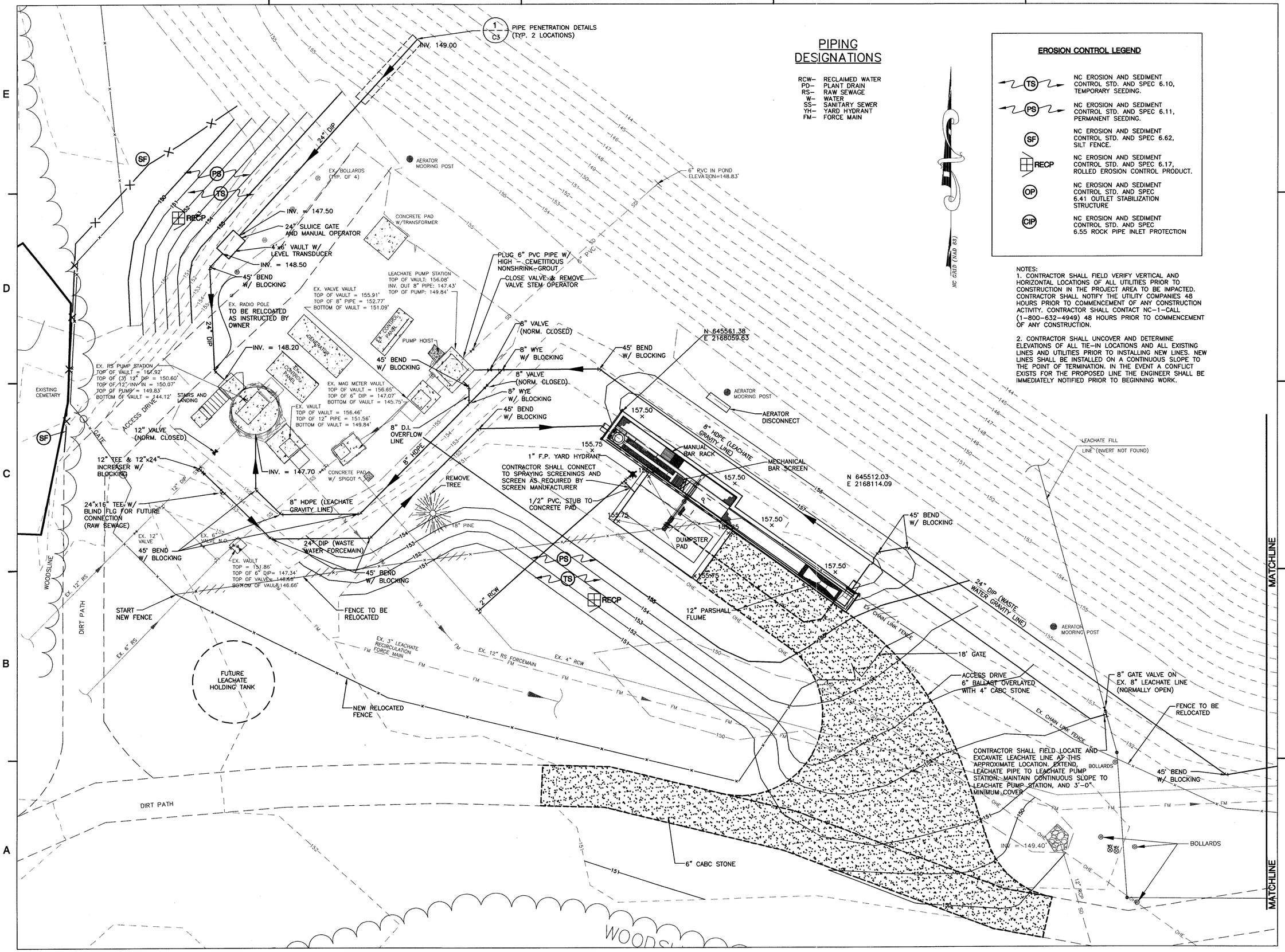

PIPING DESIGNATIONS

RCW– RECLAIMED WATER
PD– PLANT DRAIN
RS– RAW SEWAGE
W– WATER
SS– SANITARY SEWER
YH– YARD HYDRANT
FM– FORCE MAIN

NC GRID (NAD 83)

EROSION CONTROL LEGEND

TS	NC EROSION AND SEDIMENT CONTROL STD. AND SPEC 6.10, TEMPORARY SEEDING.
PS	NC EROSION AND SEDIMENT CONTROL STD. AND SPEC 6.11, PERMANENT SEEDING.
SF	NC EROSION AND SEDIMENT CONTROL STD. AND SPEC 6.62, SILT FENCE.
RECP	NC EROSION AND SEDIMENT CONTROL STD. AND SPEC 6.17, ROLLED EROSION CONTROL PRODUCT.
OP	NC EROSION AND SEDIMENT CONTROL STD. AND SPEC 6.41 OUTLET STABILIZATION STRUCTURE
CIP	NC EROSION AND SEDIMENT CONTROL STD. AND SPEC 6.55 ROCK PIPE INLET PROTECTION

NOTES:

1. CONTRACTOR SHALL FIELD VERIFY VERTICAL AND HORIZONTAL LOCATIONS OF ALL UTILITIES PRIOR TO CONSTRUCTION IN THE PROJECT AREA TO BE IMPACTED. CONTRACTOR SHALL NOTIFY THE UTILITY COMPANIES 48 HOURS PRIOR TO COMMENCEMENT OF ANY CONSTRUCTION ACTIVITY. CONTRACTOR SHALL CONTACT NC–1–CALL (1–800–632–4949) 48 HOURS PRIOR TO COMMENCEMENT OF ANY CONSTRUCTION.

2. CONTRACTOR SHALL UNCOVER AND DETERMINE ELEVATIONS OF ALL TIE–IN LOCATIONS AND ALL EXISTING LINES AND UTILITIES PRIOR TO INSTALLING NEW LINES. NEW LINES SHALL BE INSTALLED ON A CONTINUOUS SLOPE TO THE POINT OF TERMINATION. IN THE EVENT A CONFLICT EXISTS FOR THE PROPOSED LINE THE ENGINEER SHALL BE IMMEDIATELY NOTIFIED PRIOR TO BEGINNING WORK.

Dewberry

Dewberry & Davis, Inc.
2301 REXWOODS DRIVE
SUITE 200
RALEIGH, NC 27607
PHONE: 919.881.9939
FAX: 919.881.9923

JOHNSTON COUNTY LANDFILL EQUALIZATION FACILITY
JOHNSTON COUNTY, NC

SEAL

NORTH CAROLINA PROFESSIONAL ENGINEER AMANDA LEE BADER 11/07

KEY PLAN

FINAL DRAWING
NOT RELEASED FOR CONSTRUCTION

SCALE

0' 10' 20'
SCALE: 1" = 10'

No.	DATE	BY	Description

REVISIONS

DRAWN BY	MWC, NPR
APPROVED BY	RSE, ALB
CHECKED BY	DAH
DATE	OCTOBER, 2007

TITLE

SITE PLAN

PROJECT NO. 50003959

C1.01

SHEET NO. 3 OF 12

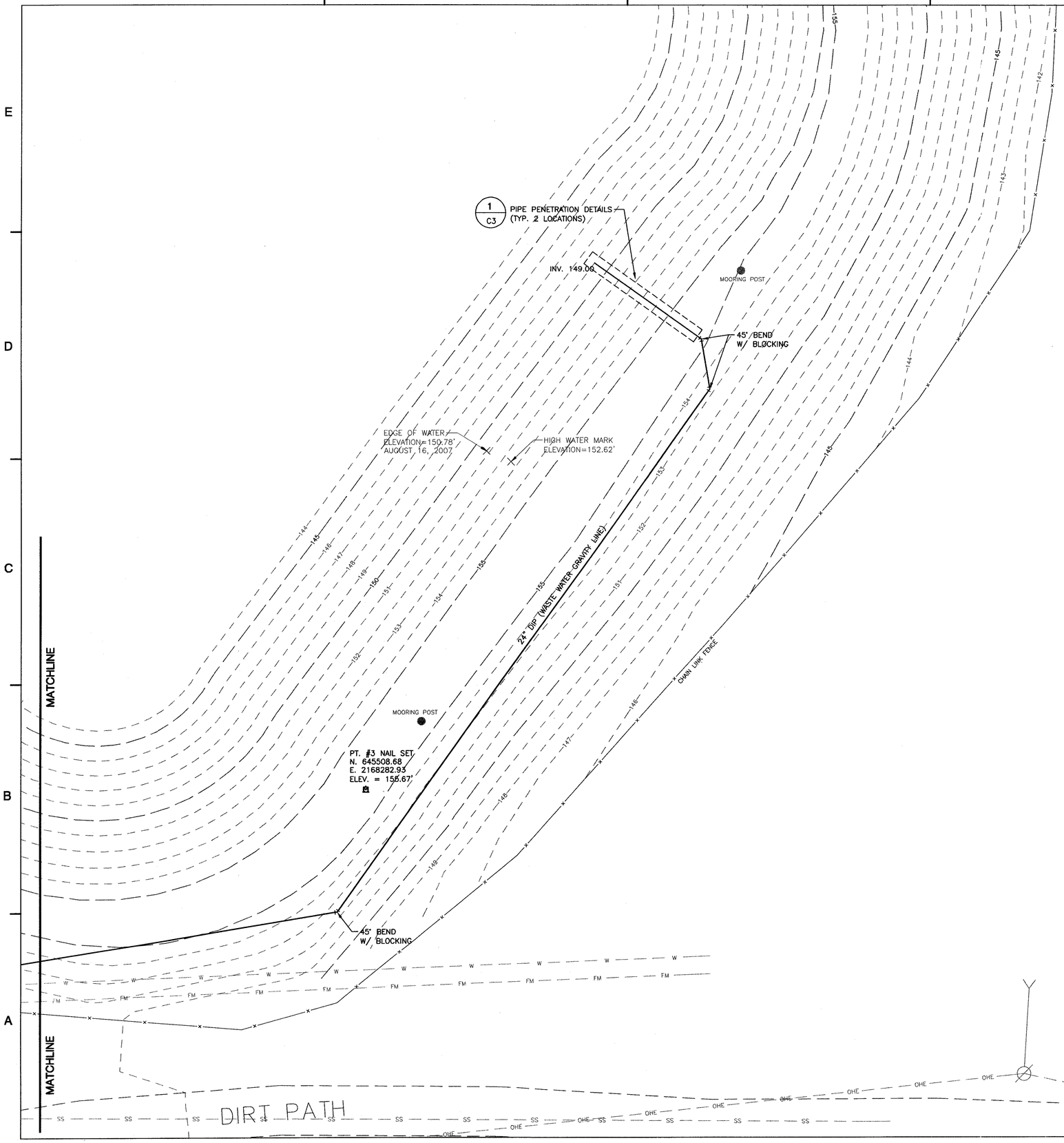

LEGEND

SF	NC EROSION AND SEDIMENT CONTROL STD. AND SPEC 6.62, SILT FENCE.
PS	NC EROSION AND SEDIMENT CONTROL STD. AND SPEC 6.11, PERMANENT SEEDING.
TS	NC EROSION AND SEDIMENT CONTROL STD. AND SPEC 6.10, TEMPORARY SEEDING.

NOTES:
1. CONTRACTOR SHALL NOTIFY OWNER AT LEAST TWO (2) WEEKS PRIOR TO PERFORMING PIPE PENETRATION WORK TO ALLOW OWNER SUFFICIENT TIME TO DEWATER THE BASIN. UPON THIS REQUEST OWNER SHALL BE RESPONSIBLE FOR DEWATERING THE BASIN TO A DEPTH AT LEAST THREE FEET BELOW SPECIFIED PIPE PENETRATION INVERT.

Dewberry

Dewberry & Davis, Inc.
2301 REXWOODS DRIVE
SUITE 200
RALEIGH, NC 27607
PHONE: 919.881.3539
FAX: 919.881.9223

JOHNSTON COUNTY LANDFILL EQUALIZATION FACILITY
JOHNSTON COUNTY, NC

SEAL

NORTH CAROLINA PROFESSIONAL SEAL ENGINEER NATASHA LEE BADER 10/31/07

KEY PLAN

FINAL DRAWING
NOT RELEASED FOR CONSTRUCTION

SCALE

0' 10' 20'
SCALE: 1" = 10'

No.	DATE	BY	Description

REVISIONS

DRAWN BY	MWC, NPR
APPROVED BY	RSE, ALB
CHECKED BY	DAH
DATE	OCTOBER, 2007

TITLE

SITE PLAN

PROJECT NO. 50003959

C1.02

SHEET NO. 4 OF 12

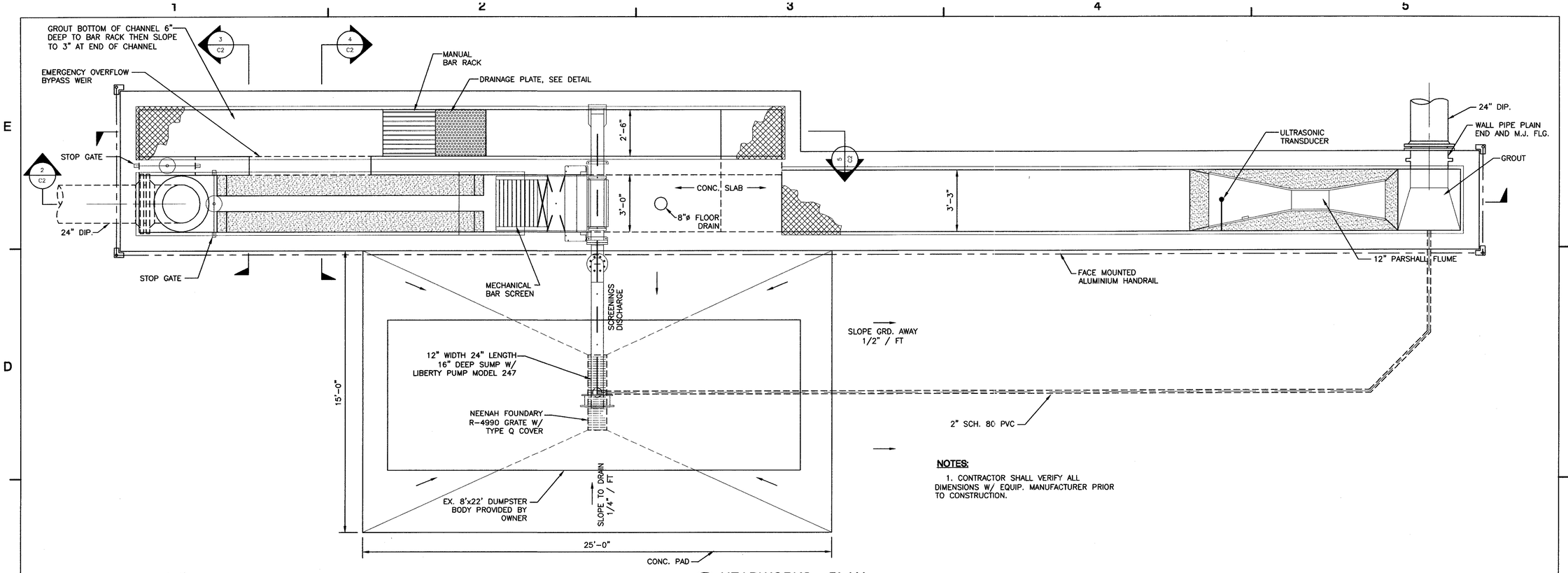

NOTES:

1. CONTRACTOR SHALL VERIFY ALL DIMENSIONS W/ EQUIP. MANUFACTURER PRIOR TO CONSTRUCTION.

1 / C2 HEADWORKS - PLAN

SCALE: 3/8" = 1'- 0"

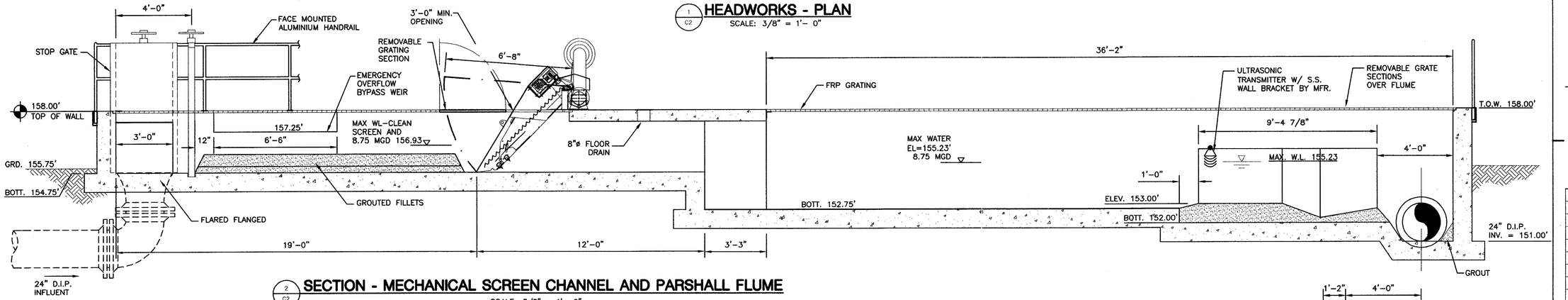

2 / C2 SECTION - MECHANICAL SCREEN CHANNEL AND PARSHALL FLUME

SCALE: 3/8" = 1'- 0"

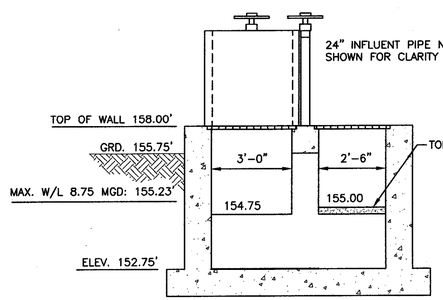

3 / C2 SECTION - SCREENING CHANNELS

SCALE: 3/8" = 1'- 0"

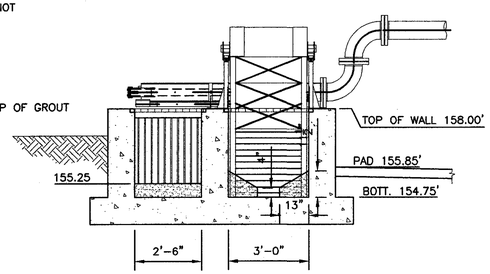

4 / C2 SECTION - HEADWORKS

SCALE: 3/8" = 1'- 0"

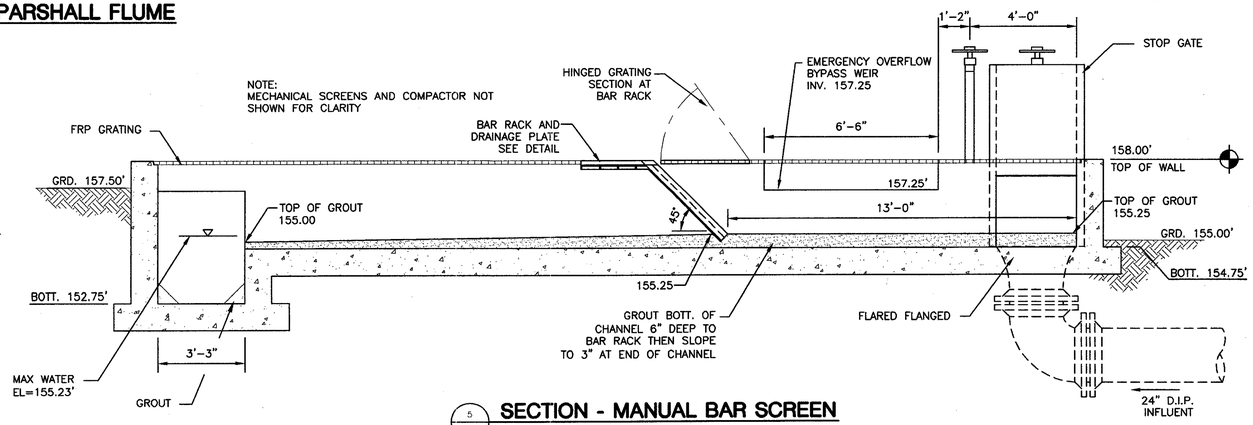

5 / C2 SECTION - MANUAL BAR SCREEN

SCALE: 3/8" = 1'- 0"

Dewberry

Dewberry & Davis, Inc.
2301 REXWOODS DRIVE
SUITE 200
RALEIGH, NC 27607
PHONE: 919.881.9939
FAX: 919.881.9923

JOHNSTON COUNTY LANDFILL EQUALIZATION FACILITY
JOHNSTON COUNTY, NC

SEAL

NORTH CAROLINA PROFESSIONAL SEAL ENGINEER AMANDA LEE BAKER 10/31/07

KEY PLAN

FINAL DRAWING
NOT RELEASED FOR CONSTRUCTION

SCALE

AS NOTED

No.	DATE	BY	Description

REVISIONS

DRAWN BY	MWC
APPROVED BY	RSE, ALB
CHECKED BY	DAH
DATE	OCTOBER, 2007

TITLE

GRIT COLLECTOR SECTIONS AND DETAILS

PROJECT NO. 50003959

C2

SHEET NO. 5 OF 12

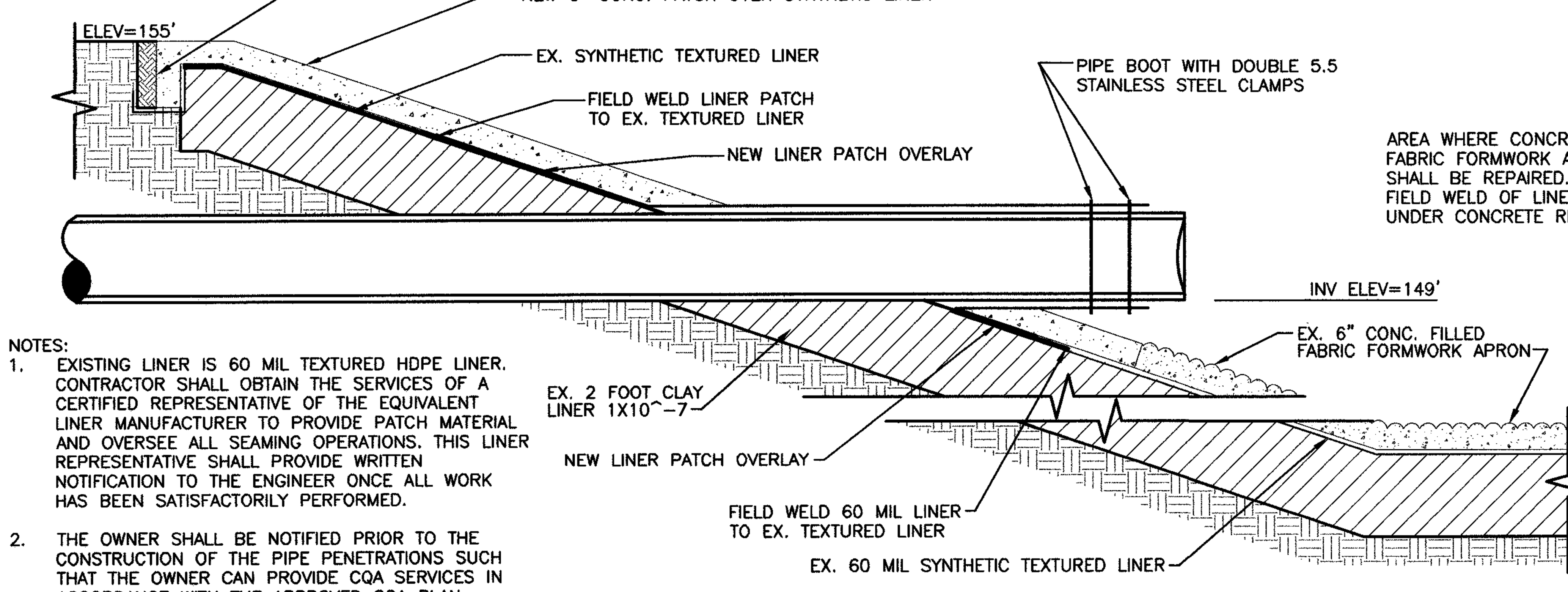

NOTES:
1. EXISTING LINER IS 60 MIL TEXTURED HDPE LINER. CONTRACTOR SHALL OBTAIN THE SERVICES OF A CERTIFIED REPRESENTATIVE OF THE EQUIVALENT LINER MANUFACTURER TO PROVIDE PATCH MATERIAL AND OVERSEE ALL SEAMING OPERATIONS. THIS LINER REPRESENTATIVE SHALL PROVIDE WRITTEN NOTIFICATION TO THE ENGINEER ONCE ALL WORK HAS BEEN SATISFACTORILY PERFORMED.
2. THE OWNER SHALL BE NOTIFIED PRIOR TO THE CONSTRUCTION OF THE PIPE PENETRATIONS SUCH THAT THE OWNER CAN PROVIDE CQA SERVICES IN ACCORDANCE WITH THE APPROVED CQA PLAN.
3. CLAY LINER SHALL BE RESTORED TO 1X10^-7 CM/SEC.

SECTION

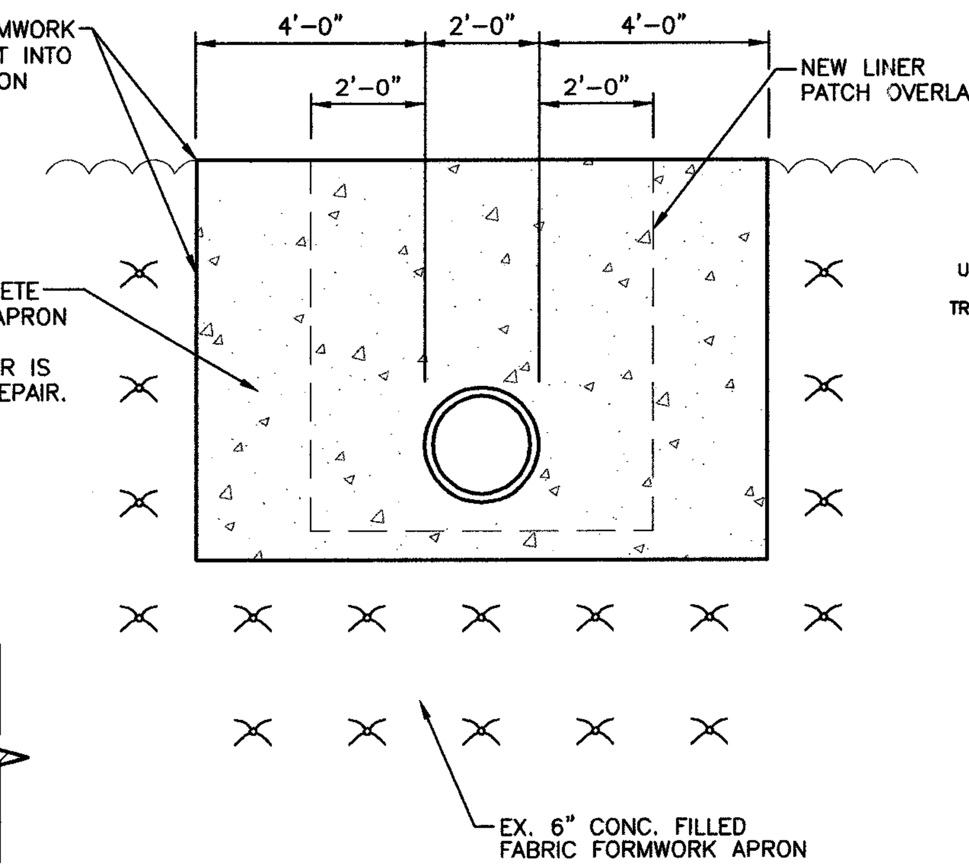

ELEVATION

1/C3 PIPE PENETRATION (TYP OF 2 REQ'D)
NOT TO SCALE

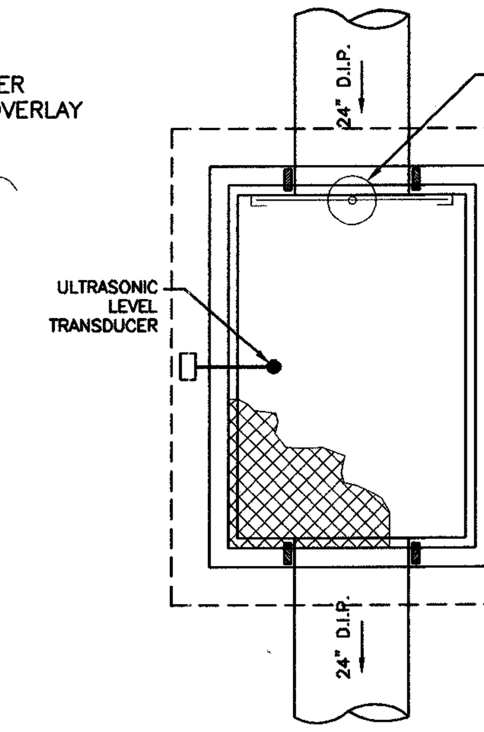

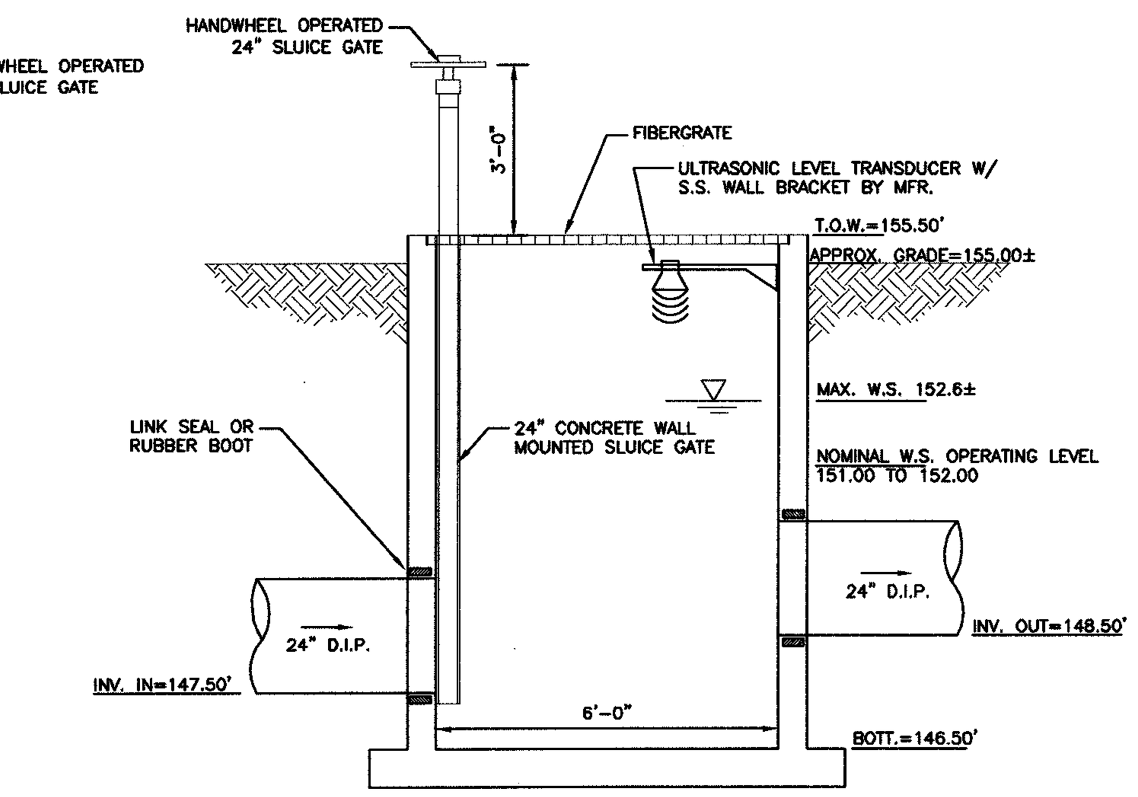

NEW 6'x4' VAULT
SCALE: 1/2"=1'-0"

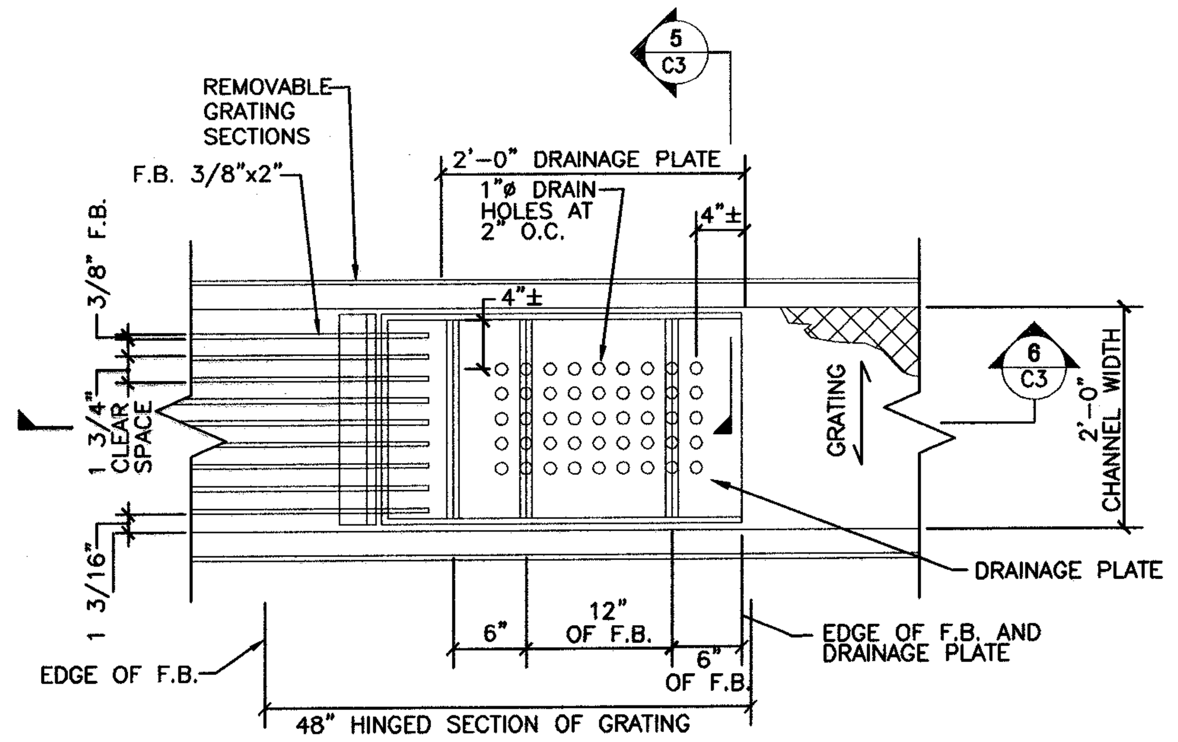

NOTE: HOT DIP GALVANIZE AFTER FABRICATION.

BAR RACK AND DRAINAGE PLATE DETAIL - PLAN VIEW
NOT TO SCALE

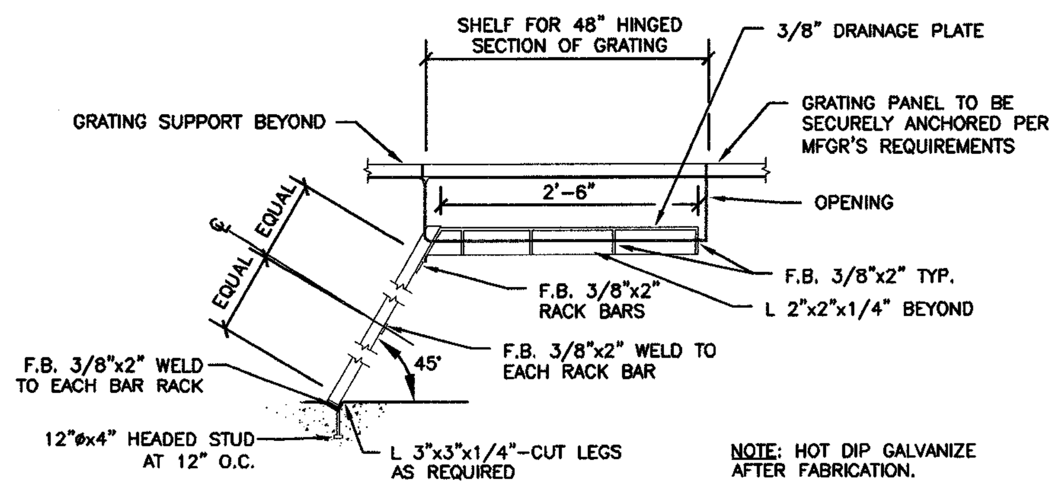

NOTE: HOT DIP GALVANIZE AFTER FABRICATION.

BAR RACK DRAINAGE PLATE DETAIL SECTION
NOT TO SCALE

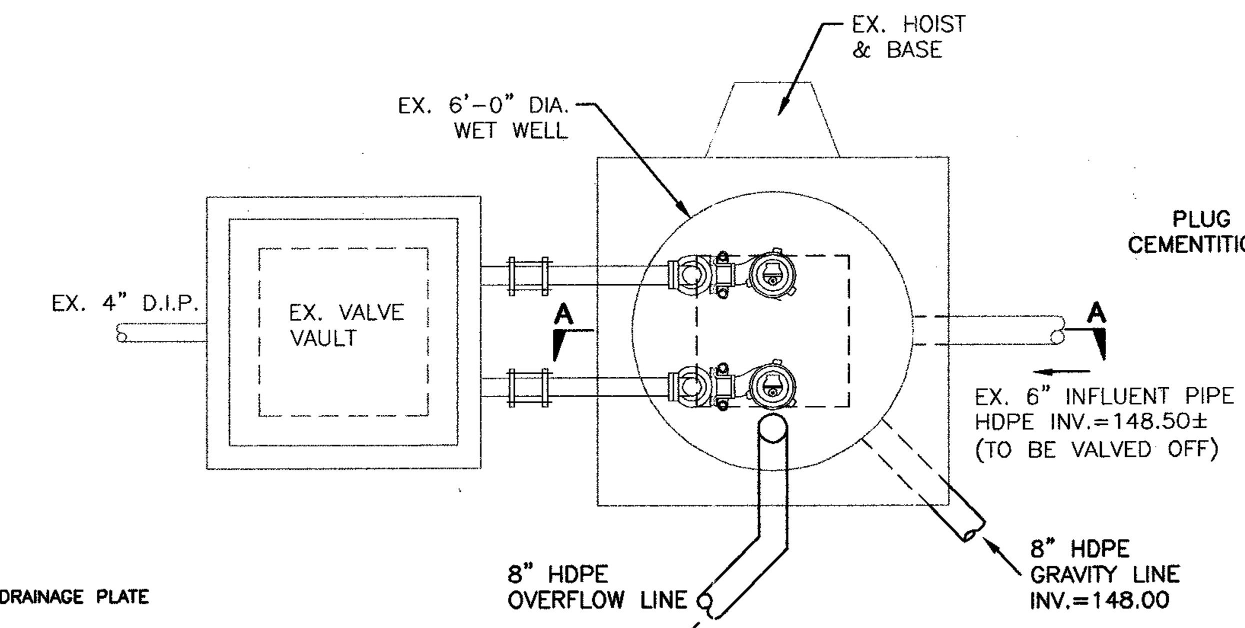

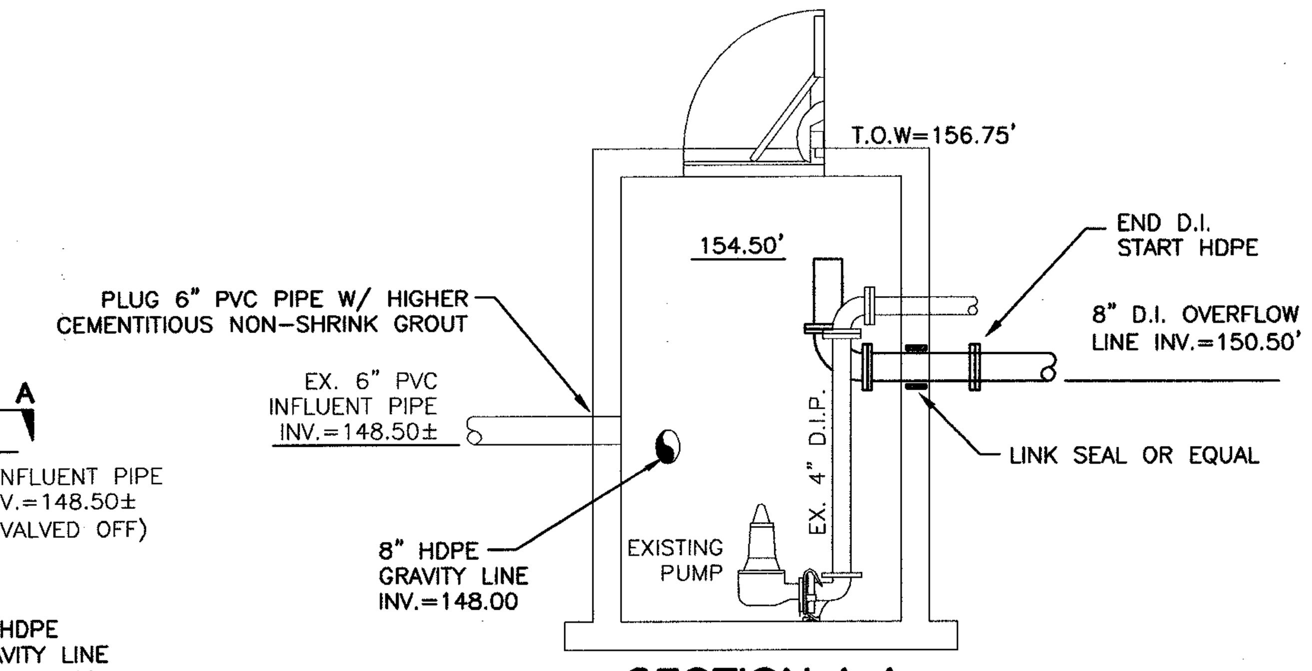

SECTION A-A

4/C3 PIPING MODIFICATIONS TO EXISTING LEACHATE PUMP STATION
NOT TO SCALE

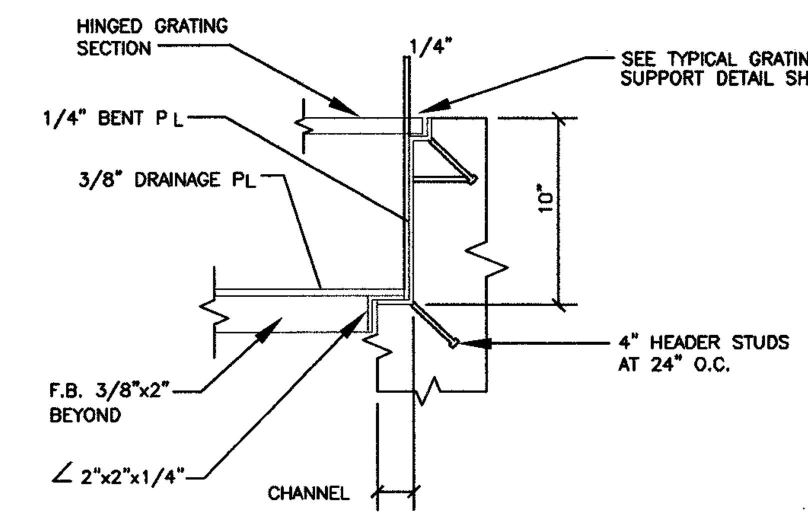

DRAINAGE PLATE SECTION
NOT TO SCALE

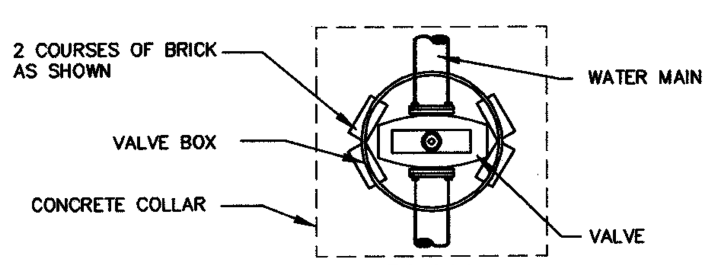

PLAN

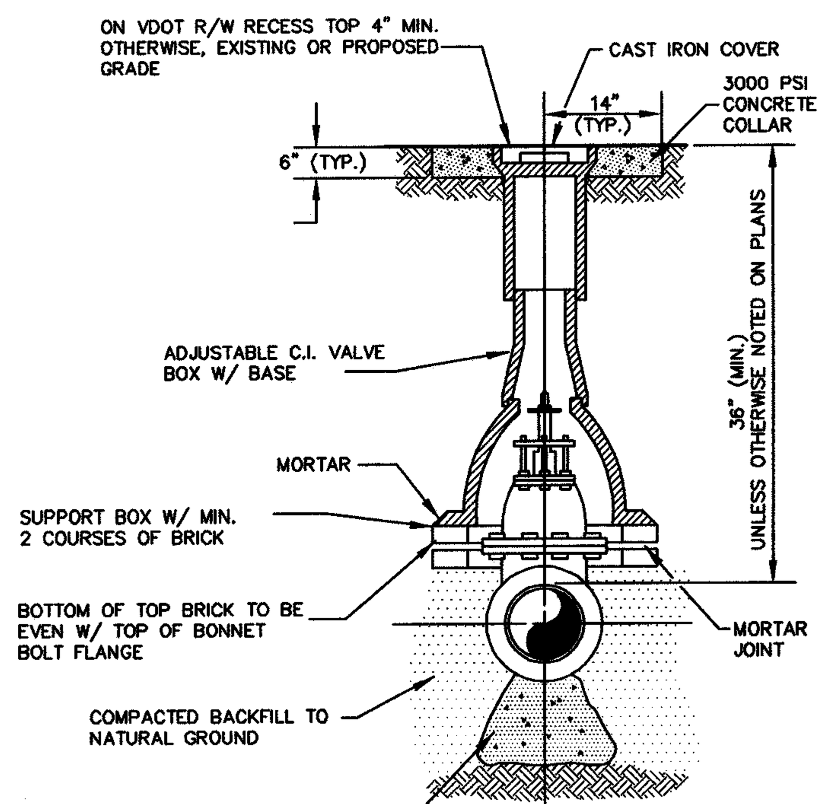

SECTION

TYPICAL VALVE SETTING DETAIL
NOT TO SCALE

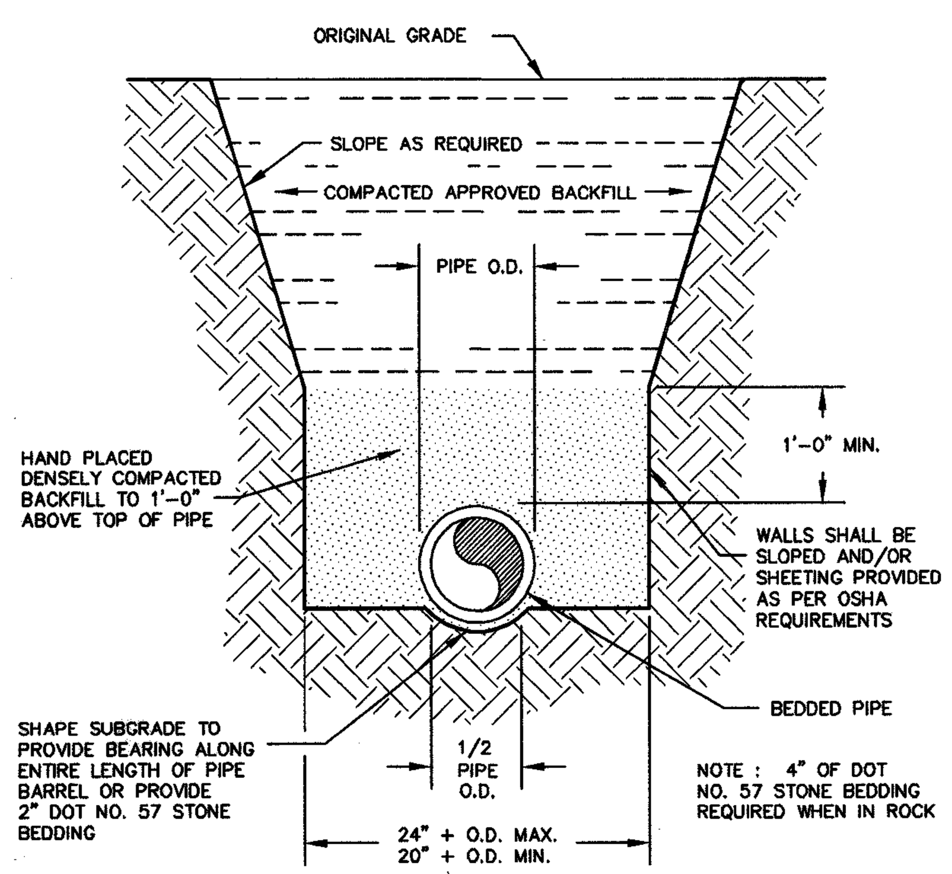

PIPE LAYING CONDITION DUCTILE IRON GRAVITY SEWER AND HIGH DENSITY POLYETHYLENE PIPE
NOT TO SCALE

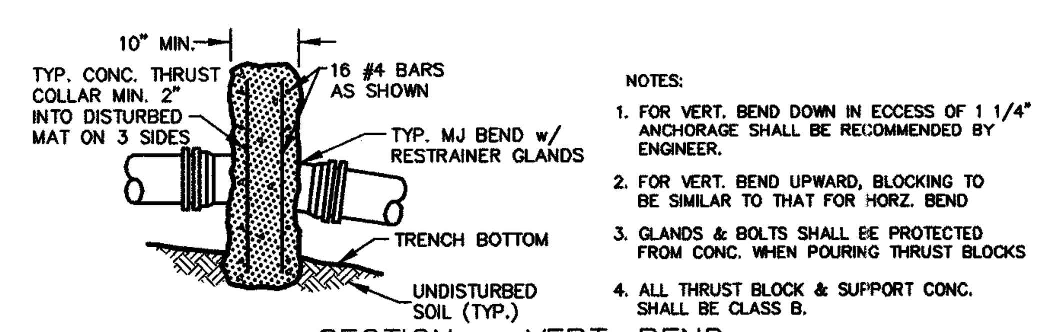

SECTION - VERT. BEND
N.T.S.

NOTES:
1. FOR VERT. BEND DOWN IN ECCESS OF 1 1/4" ANCHORAGE SHALL BE RECOMMENDED BY ENGINEER.
2. FOR VERT. BEND UPWARD, BLOCKING TO BE SIMILAR TO THAT FOR HORZ. BEND
3. GLANDS & BOLTS SHALL BE PROTECTED FROM CONC. WHEN POURING THRUST BLOCKS
4. ALL THRUST BLOCK & SUPPORT CONC. SHALL BE CLASS B.

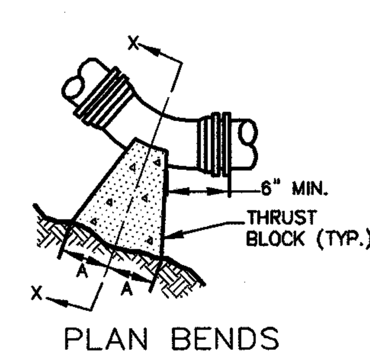

PLAN BENDS
N.T.S.

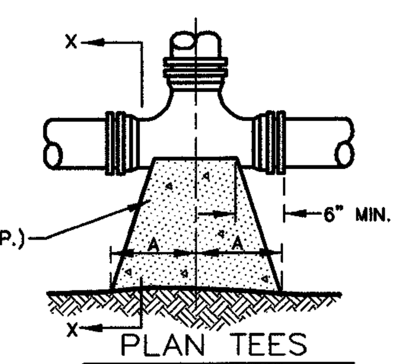

PLAN TEES
N.T.S.

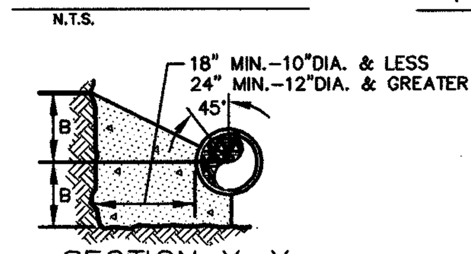

SECTION X-X
BENDS & TEES
N.T.S.

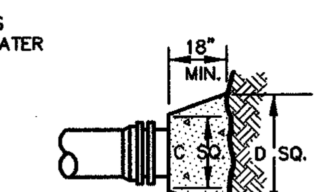

PLAN & ELEV. PLUGS
N.T.S.

THRUST BLOCK DETAILS

REACTION BEARING AREAS FOR HORIZONTAL PIPE BENDS
BASED ON TEST PRESSURE OF 200 P.S.I.
ALL AREAS GIVEN IN SQUARE FEET.

SIZE AND DEGREE OF BEND	STATIC THRUST IN POUNDS	MODERATELY DRY CLAY 4000 LBS/FT²	SOFT CLAY 2000 LBS/FT²	GRAVEL / COARSE SAND 1600 LBS/FT²	DRY CLAY - ALWAYS DRY 8000 LBS/FT²	SAND, COMPACT FIRM 8000 LBS/FT²	SAND -CLEAN DRY 4000 LBS/FT²	QUICKSAND - VERY POOR SOIL 1000 LBS/FT²	ROCK - POOR 10,000 LBS/FT²
4"/6"									
11 1/4°	1,108	1	1	1	1	1	1	2	1
22 1/2°	2,207	1	2	2	1	1	1	3	1
45°	4,328	2	3	3	1	1	2	5	1
90°	7,996	2	4	5	1	1	2	8	1
PLUG	5,655	2	3	4	1	1	2	6	1
8"									
11 1/4°	1,970	1	1	2	1	1	1	2	1
22 1/2°	3,922	1	2	3	1	1	1	4	1
45°	7,694	2	4	5	1	1	2	8	1
90°	14,215	4	8	9	2	2	4	15	2
PLUG	10,053	3	5	6	2	2	3	10	1
12"									
11 1/4°	4,433	2	3	3	1	1	2	5	1
22 1/2°	8,826	3	5	6	2	2	3	9	1
45°	17,312	5	9	11	3	3	5	18	2
90°	31,983	8	16	19	4	4	8	32	4
PLUG	22,619	6	12	14	3	3	6	23	3
18"									
11 1/4°	11,095	3	6	7	2	2	3	11	1
22 1/2°	20,595	6	11	13	3	3	6	21	3
45°	40,398	11	21	25	6	6	11	41	5
90°	79,630	20	38	46	10	10	20	75	8
PLUG	52,780	14	35	33	7	7	14	54	7

REACTION BEARING AREAS ARE IN SQUARE FEET MEASURED IN A VERTICAL PLANE IN THE TRENCH SIDE AT AN ANGLE OF 90° TO THE THRUST VECTOR.

REACTION BEARING AREAS FOR HORIZONTAL PIPE BENDS
BASED ON TEST PRESSURE OF 200 P.S.I.
ALL AREAS GIVEN IN SQUARE FEET.

SIZE AND DEGREE OF BEND	STATIC THRUST IN POUNDS	MODERATELY DRY CLAY 4000 LBS/FT²	SOFT CLAY 2000 LBS/FT²	GRAVEL/COARSE SAND 1600LBS/FT	DRY CLAY - ALWAYS DRY 8000 LBS/FT²	SAND, COMPACT FIRM 8000 LBS/FT²	SAND -CLEAN DRY 4000 LBS/FT²	QUICKSAND - VERY POOR SOIL 1000 LBS/FT²	ROCK - POOR 10,000 LBS/FT²
24"									
11 1/4°	17,734	5	9	11	3	3	5	18	2
22 1/2°	35,305	9	18	22	5	5	9	36	4
45°	69,252	18	35	42	9	9	18	70	7
90°	127,936	32	64	77	16	16	32	128	13
PLUG	90,478	23	46	55	12	12	23	91	10
30"									
11 1/4°	27,709	7	14	17	4	4	7	2	3
22 1/2°	55,163	14	28	34	7	7	14	56	6
45°	108,206	28	55	65	14	14	28	109	11
90°	199,900	50	100	120	25	25	50	200	20
PLUG	141,372	36	71	85	18	18	36	142	15
36"									
11 1/4°	39,901	10	20	24	5	5	10	40	4
22 1/2°	79,439	20	40	48	10	10	20	30	8
45°	155,816	39	78	94	20	20	39	156	16
90°	287,855	72	144	172	36	36	72	288	29
PLUG	203,575	51	102	122	26	26	51	204	21
48"									
11 1/4°	70,935	18	36	43	9	9	18	71	8
22 1/2°	141,218	36	71	85	18	18	36	142	15
45°	277,007	70	139	166	35	35	70	277	28
90°	511,742	128	256	320	64	64	128	512	52
PLUG	361,911	91	181	217	46	46	91	362	37

REACTION BEARING AREAS ARE IN SQUARE FEET MEASURED IN A VERTICAL PLANE IN THE TRENCH SIDE AT AN ANGLE OF 90° TO THE THRUST VECTOR.

Dewberry

Dewberry & Davis, Inc.
2301 REXWOODS DRIVE
SUITE 200
RALEIGH, NC 27607
PHONE: 919.881.9939
FAX: 919.881.9923

JOHNSTON COUNTY LANDFILL EQUALIZATION FACILITY
JOHNSTON COUNTY, NC

SEAL

KEY PLAN

FINAL DRAWING
NOT RELEASED FOR CONSTRUCTION

SCALE
AS NOTED

No.	DATE	BY	Description

REVISIONS

DRAWN BY MWC
APPROVED BY RSE, ALB
CHECKED BY DAH
DATE OCTOBER, 2007

TITLE
VALVE VAULT, PIPING MODIFICATIONS, AND DETAILS

PROJECT NO. 50003959

C3

SHEET NO. 6 OF 12

SEEDING SCHEDULE IN UPLAND AREAS

1. LIME, SEED AND FERTILIZER SHALL BE APPLIED WITH NECESSARY EQUIPMENT TO GIVE UNIFORM DISTRIBUTION OF THESE MATERIALS. THE KINDS OF MATERIALS TO BE APPLIED PER ACRE:

DATE	TYPE	PLANTING RATE
SEPT. 1 – APR. 1	KENTUCKY 31 FESCUE	75 LBS./ACRE
	PENSACOLA BAHIAGRASS	50 LBS./ACRE
	CENTIPEDE	5 LBS./ACRE
	10–20–20–FERTILIZER	500 LBS./ACRE
	LIMESTONE	4000 LBS./ACRE
APR. 1 – SEPT. 1	PENSACOLA BAHIAGRASS	75 LBS./ACRE
	KENTUCKY 31 FESCUE	50 LBS./ACRE
	CENTIPEDE	5 LBS./ACRE
	10–20–20–FERTILIZER	500 LBS./ACRE
	LIMESTONE	4000 LBS./ACRE

2. SEEDED AREA SHALL BE CULTIPACKED TO FIRM SEEDBED AND COVER SEED.
3. SMALL GRAIN STRAW SHALL BE APPLIED AT A RATE OF 2 TONS/ACRE OVER SEEDED AREAS AS A MULCH WITHIN 24 HOURS OF THE INITIAL SEEDING OPERATION. NO BARE GROUND SHALL BE VISIBLE WHEN RIDING BY A MULCHED AREA IF PROPER APPLICATION IS ACHIEVED. THICK CLUMPS OF STRAW ARE NOT PERMISSIBLE AS A UNIFORM COVERAGE IS EXPECTED.
4. MULCHED AREA SHALL BE TACKED WITH LIQUID ASPHALT AT A RATE OF 300 GAL/ACRE TO HOLD STRAW IN PLACE. HYDRAULIC TACKING MATERIAL SHALL BE USED IN HIGH QUALITY WATER ZONES AND CRITICAL HABITAT AREAS.
5. DITCH TREATMENT SHALL BE USED IN AREAS WHERE STEEP GRADES COULD CAUSE DITCH EROSION. USE OF EXCELSIOR MATTING OR FIBERGLASS/SYNTHETIC ROVING IS ACCEPTABLE. DITCH TREATMENT SHOULD BE INSTALLED BEFORE MULCHING OPERATION.

CONSTRUCTION SEQUENCE

1. THE CONTRACTOR SHALL NOTIFY NCDENR LAND QUALITY SECTION PRIOR TO BEGINNING CONSTRUCTION AT (919) 791–4200.
2. INSTALL SILT FENCING AND CHECK DAMS AND OTHER MEASURES AS SHOWN ON THE APPROVED PLAN PRIOR TO ANY LAND DISTURBING ACTIVITIES. CLEAR ONLY AS NECESSARY TO INSTALL THESE DEVICES.
3. THE CONTRACTOR SHALL PROPERLY GRADE, SEED, AND MULCH WITHIN 15 CALENDAR DAYS OF INSTALLING THE UTILITIES. PERMANENT GROUNDCOVER SHALL BE PROVIDED FOR ALL DISTURBED AREAS WITHIN 15 WORKING DAYS OR NO MORE THAN 90 CALENDAR DAYS. VEGETATION SHALL BE ESTABLISHED ON SLOPES WITHIN 21 CALENDAR DAYS OF ANY LAND DISTURBING ACTIVITIES.
4. PRIOR TO CROSSING ANY DITCHES OR STREAMS, CONTRACTOR SHALL INSTALL ALL REQUIRED EROSION CONTROL MEASURES. AFTER VEGETATION HAS BEEN ESTABLISHED IN THESE AREAS, ALL TEMPORARY MEASURES SHALL BE REMOVED.
5. ALL EXCAVATED AREAS SHALL BE BACKFILLED DAILY.
6. THE CONTRACTOR SHALL PROVIDE CHECK DAMS AT THE END OF CONSTRUCTION DAILY.
7. THE CONTRACTOR SHALL MAINTAIN THE DEVICES ACCORDING TO THE JUNE 1, 2006 VERSION OF THE NORTH CAROLINA EROSION AND SEDIMENT CONTROL PLANNING AND DESIGN MANUAL.
8. AFTER THE DISTURBED AREAS ARE STABILIZED, AS APPROVED BY THE ENGINEER, THE CONTRACTOR SHALL REMOVE THE TEMPORARY DEVICES AND PROPERLY DISPOSE OF THE TRAPPED SEDIMENT. THE CONTRACTOR SHALL STABILIZE THE AREAS DISTURBED DURING THE REMOVAL OPERATION BY APPLYING SEED AND MULCH ACCORDING TO THE SEEDING SCHEDULE AND THE DITCH PROTECTION SHOWN ON THE DRAWINGS.

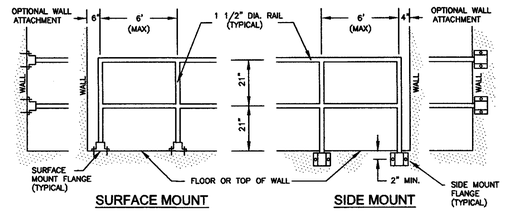

NOTE : SEE PLAN FOR DESIRED MOUNTING OPTION

HANDRAIL DETAIL
NOT TO SCALE

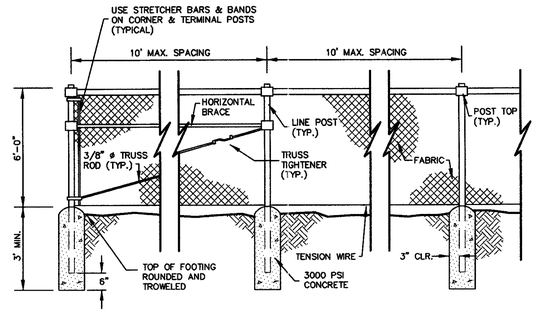

FENCE DETAIL
NOT TO SCALE

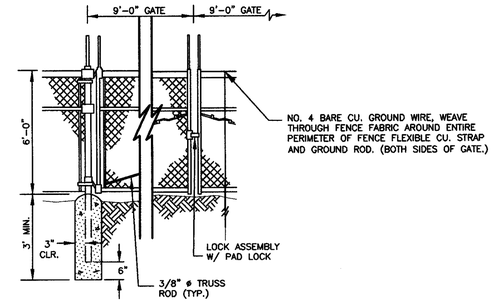

DOUBLE GATE
NOT TO SCALE

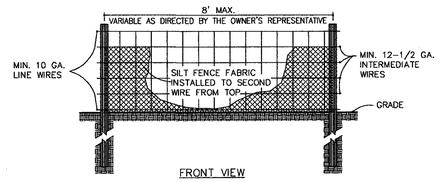

FRONT VIEW

NOTE:

–USE SILT FENCE ONLY WHEN DRAINAGE AREA DOES NOT EXCEED 1/4 ACRE AND NEVER IN AREAS OF CONCENTRATED FLOW

–END OF SILT FENCE NEEDS TO BE TURNED UPHILL.

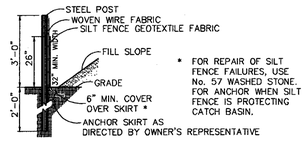

* FOR REPAIR OF SILT FENCE FAILURES, USE No. 57 WASHED STONE. FOR ANCHOR WHEN SILT FENCE IS PROTECTING CATCH BASIN.

SIDE VIEW

TYPICAL SILT FENCE DETAIL
N.T.S.

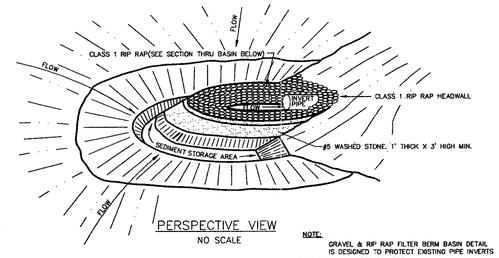

PERSPECTIVE VIEW
NO SCALE

NOTE:
GRAVEL & RIP RAP FILTER BERM BASIN DETAIL IS DESIGNED TO PROTECT EXISTING PIPE INVERTS THAT DRAIN 10 ACRES OR LESS.

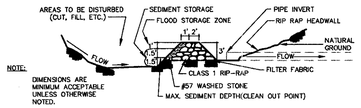

NOTE:
DIMENSIONS ARE MINIMUM ACCEPTABLE UNLESS OTHERWISE NOTED.

SECTION THRU BASIN, FILTER AND CULVERT PIPE
NO SCALE

GRAVEL & RIP RAP HORSESHOW INLET BASIN
N.T.S.

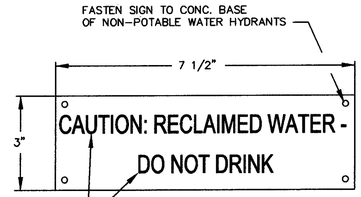

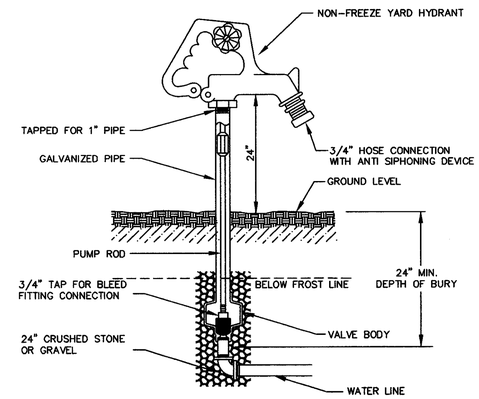

NONFREEZE YARD HYDRANT
SCALE: N.T.S.

L = THE DISTANCE SUCH THAT POINTS A AND B ARE OF EQUAL ELEVATION

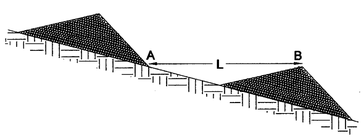

TYPICAL CHECK DAM SPACING
N.T.S.

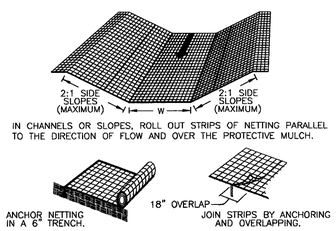

IN CHANNELS OR SLOPES, ROLL OUT STRIPS OF NETTING PARALLEL TO THE DIRECTION OF FLOW AND OVER THE PROTECTIVE MULCH.

TYPICAL JUTE MATTING DETAIL
N.T.S.

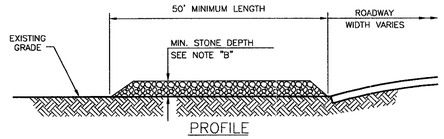

PROFILE

NOTES:

A) MINIMUM WIDTH OF CONSTRUCTION ENTRANCE PAD SHALL BE 20 FT. SEE PLANS FOR LOCATION, ACTUAL WIDTH AND CONFIGURATION.

B) STONE SHALL BE CRUSHED AGGREGATE BASE. PROVIDE 12" THICK AT ENTRANCE FOR FIRST 15 FT. INTO PROJECT AND 6" THICK FOR REMAINDER.

C) THE ENTRANCE SHALL BE MAINTAINED TO PREVENT TRACKING OR FLOWING OF SEDIMENT ONTO ROADWAY. THIS MAY REQUIRE PERIODIC TOP DRESSING WITH ADDITIONAL STONE AND REPAIR AND/OR CLEANOUT OF ANY MEASURES USED TO TRAP SEDIMENT.

TYPICAL CONSTRUCTION ENTRANCE PAD
N.T.S.

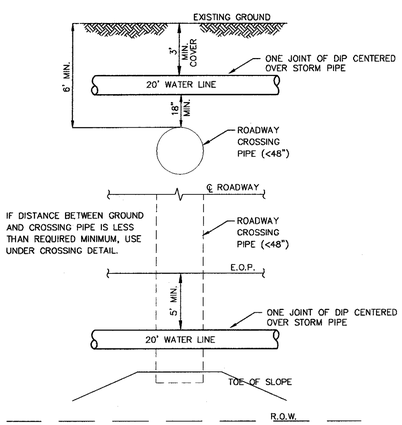

CULVERT CROSSING (OVER) DETAIL
N.T.S.

TYPE A
PIPE OUTLET TO FLAT AREA WITH NO DEFINED CHANNEL

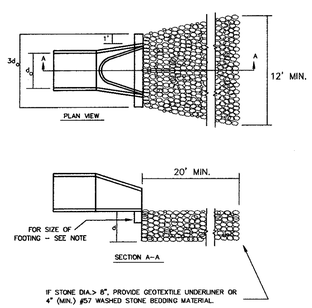

TYPE B
PIPE OUTLET TO WELL– DEFINED CHANNEL

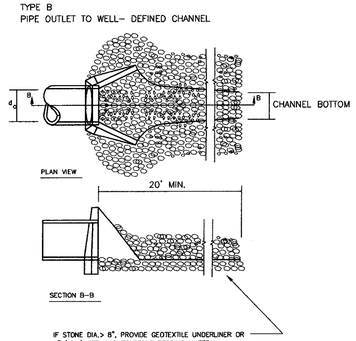

NOTES:
(1) d = 1.5 TIMES THE MAXIMUM STONE DIAMETER BUT NOT LESS THAN 6 INCHES.
(2) d t = 1' ABOVE MAXIMUM TAILWATER OR TOP OF CHANNEL BANK (WHICHEVER IS LESS).
(3) La =LENGTH OF RIPRAP APRON. La SHALL EQUAL 18" UNLESS OTHERWISE NOTED.

NOTES: FOOTING SIZE

PIPE SIZE	WIDTH	DEPTH
15" – 24"	8"	12"
24" – 36"	12"	24"
36" – 54"	18"	36"

CULVERT OUTLET PROTECTION
N.T.S.

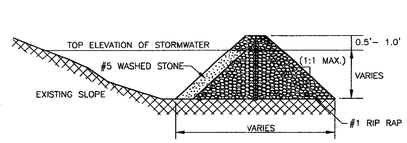

SIDE VIEW

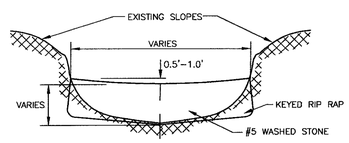

NOTES:
1. HEIGHT & WIDTH DETERMINED BY EXISTING TOPOGRAPHY AND SEDIMENT STORAGE REQUIRED.
2. KEY RIP RAP INTO THE DAM FOR STABILIZATION.

TYPICAL CHECK DAM DETAIL
N.T.S.

Dewberry

Dewberry & Davis, Inc.
2301 REXWOODS DRIVE
SUITE 200
RALEIGH, NC 27607
PHONE: 919.881.9939
FAX: 919.881.9923

JOHNSTON COUNTY LANDFILL EQUALIZATION FACILITY
JOHNSTON COUNTY, NC

SEAL

KEY PLAN

FINAL DRAWING
NOT RELEASED FOR CONSTRUCTION

SCALE

No.	DATE	BY	Description

REVISIONS

DRAWN BY	JRG
APPROVED BY	ALB
CHECKED BY	ALB
DATE	OCTOBER, 2007

TITLE

MISCELLANEOUS DETAILS

PROJECT NO. 50003959

C4

SHEET NO. 7 OF 12

NOTE: THIS DETAIL APPLIES TO SQUARE OR RECTANGULAR OPENINGS WITH MAXIMUM OPENING DIMENSION LESS THAN OR EQUAL TO 3'-0" AND TO CIRCULAR OPENINGS UP TO 3'-0" IN DIAMETER MAXIMUM.

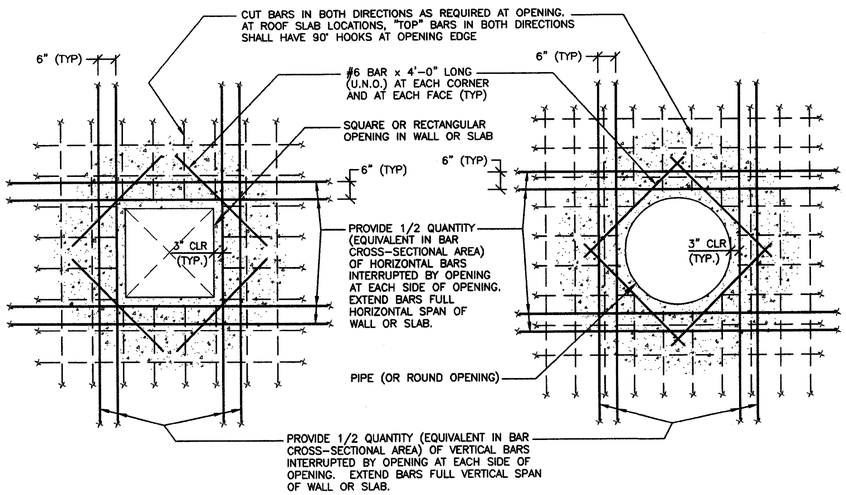

3 / S1 WALL/SLAB OPENING REINFORCING DETAIL

SCALE: NOT TO SCALE

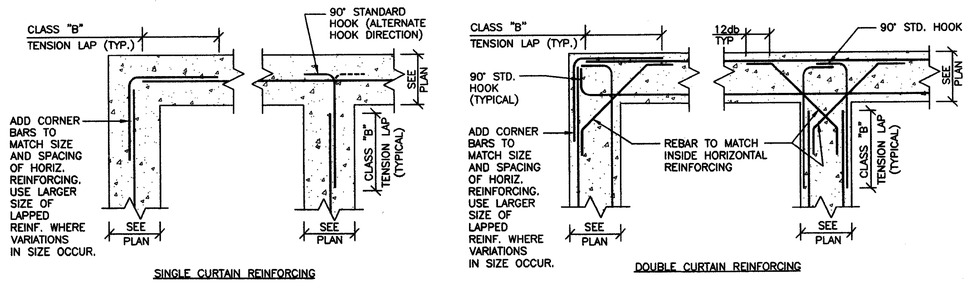

2 / S1 WALL CORNER REINFORCING DETAIL

SCALE: NOT TO SCALE

NOTE: UNLESS NOTED OTHERWISE ON DRAWINGS, CONSTRUCTION JOINTS IN WALLS SHALL BE LOCATED SUCH THAT A CONCRETE POUR DOES NOT EXCEED THIRTY (30) FEET IN ANY HORIZONTAL DIRECTION. NO CONSTRUCTION JOINTS SHALL BE PLACED IN FOOTING SLABS WITHOUT WRITTEN APPROVAL OF THE ENGINEER.

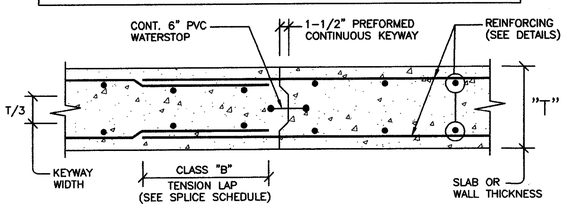

1 / S1 CONSTRUCTION JOINT DETAIL

SCALE: NOT TO SCALE

GENERAL STRUCTURAL NOTES

DESIGN:

1. THE GENERAL STRUCTURAL NOTES ARE INTENDED TO AUGMENT THE DRAWINGS AND SPECIFICATIONS. SHOULD CONFLICTS EXIST BETWEEN THE DRAWINGS, SPECIFICATIONS, AND GENERAL STRUCTURAL NOTES, THE STRICTEST PROVISION SHALL GOVERN.
2. STRUCTURAL DESIGN OF NEW HEADWORKS STRUCTURE CONFORMS TO THE REQUIREMENTS OF THE 2006 NORTH CAROLINA STATE BUILDING CODE.
3. DESIGN LOADS AND DESIGN DATA ARE AS FOLLOWS:
   A. FLOOR LIVE LOADS:

EXTERIOR SLAB-ON-GRADE MINIMUM	200 PSF
FLOOR GRATING AND SUPPORTED PLATFORMS	150 PSF

   B. ROOF SNOW LOAD: NOT APPLICABLE
   C. WIND LOAD: NOT APPLICABLE
   D. SEISMIC DESIGN DATA:

SEISMIC USE GROUP	2
SEISMIC IMPORTANCE FACTOR (I_E)	1.25
SPECTRAL RESPONSE ACCELERATIONS, S_S	0.22
SPECTRAL RESPONSE ACCELERATIONS, S_1	0.082
SPECTRAL RESPONSE COEFF. S_{DS}	0.23
SPECTRAL RESPONSE COEFF. S_{D1}	0.13
SITE CLASS	D
SEISMIC DESIGN CATEGORY	B
SEISMIC-FORCE-RESISTING SYSTEM	REINFORCED CONCRETE WALLS
ANALYSIS PROCEDURE	NCSBC SECTION 1617.4

FOUNDATIONS:

1. FOUNDATION DESIGN IS BASED ON AN ASSUMED ALLOWABLE SOIL BEARING PRESSURE CAPACITY OF 1,500 PSF. CONTRACTOR IS TO CONFIRM 1,500 PSF MINIMUM SOIL BEARING CAPACITY WITH AN INDEPENDENT GEOTECHNICAL TESTING FIRM PRIOR TO PLACING CONCRETE. CONTRACTOR SHALL PROVIDE OWNER AND ENGINEER A WRITTEN REPORT OF TEST RESULTS FOR THEIR RECORDS.
2. THE STRUCTURAL ENGINEER OF RECORD IS NOT RESPONSIBLE FOR SUBSURFACE CONDITIONS ENCOUNTERED IN THE FIELD CONTRARY TO THOSE ASSUMED FOR DESIGN.
3. ALL COMPACTED FILL, EXCAVATIONS, AND SUBGRADES SHALL BE OBSERVED AND TESTED BY A GEOTECHNICAL ENGINEER REGISTERED IN THE STATE OF NORTH CAROLINA (OR A QUALIFIED GEOTECHNICAL TECHINICIAN WORKING UNDER THE DIRECT SUPERVISION OF A REGISTERED ENGINEER) TO VERIFY SPECIFIED GEOTECHNICAL CONFORMANCE REQUIREMENTS. CONTRACTOR SHALL COORDINATE TESTING WITH OWNER AS DECLARED IN THE CONTRACT DOCUMENTS.
4. COMPACTED ENGINEERED STRUCTURAL FILL SHALL BE AS FOLLOWS:
   A. INSPECTED AND APPROVED BY PROJECT GEOTECHNICAL ENGINEER.
   B. PLACED IN LOOSE LIFTS NOT EXCEEDING 8 INCHES IN THICKNESS.
   C. COMPACTED TO AT LEAST 95 PERCENT OF MAXIMUM DRY DENSITY PER ASTM D-698, STANDARD PROCTOR METHOD.
   D. FREE OF BOULDERS, ORGANICS, TRASH, AND OTHER DELETERIOIUS MATERIALS.
   E. MOISTURE CONTENT WITHIN +/- 3 PERCENT OF OPTIMUM.
5. DURING FILLING AND BACKFILLING, DENSITY TESTING SHALL BE MADE TO MONITOR COMPACTION LEVELS AND MOISTURE CONTENTS (ASTM D 698 FOR COHESIVE FILL AND ASTM D 1557 FOR GRANULAR FILL). FREQUENCY OF DENSITY TESTING SHALL BE AS DIRECTED BY GEOTECHNICAL ENGINEER TO VERIFY SPECIFIED COMPACTION AND MOISTURE CONTENT REQUIREMENTS.
6. BACKFILL WITHIN 5 FEET OF HEADWORKS WALLS SHALL BE COMPACTED WITH SMALL COMPACTION EQUIPMENT (HAND OPERATED TAMPER AND/OR RAMMAX) IN ORDER TO AVOID DAMAGING NEWLY CONSTRUCTED WALLS.
7. CONTRACTOR SHALL CONTROL SITE GROUNDWATER AND/OR SURFACE WATER BY ALL MEANS NECESSARY TO MAINTAIN A WATER LEVEL A MINIMUM 2 FEET BELOW FOUNDATION MAT SUBGRADE SO AS TO NOT DAMAGE FOUNDTION EXCAVATIONS. THE BASE OF ALL MAT EXCAVATIONS SHOULD BE FREE OF ALL WATER AND LOOSE SOIL PRIOR TO PLACING CONCRETE. ANY SUBGRADE SOILS WHICH HAVE BEEN WEAKENED DUE TO SATURATION OR DISTURBANCE SHALL BE RECOMPACTED OR REMOVED AND REPLACED WITH STRUCTURAL FILL AS DIRECTED BY THE GEOTECHNICAL ENGINEER. CONCRETE SHALL BE PLACED AS SOON AS POSSIBLE AFTER EXCAVATING SO THAT LOOSENING OR EXCESSIVE DRYING OF BEARING MATERIALS DOES NOT OCCUR.
8. ALL EXCAVATIONS SHALL CONFORM TO APPLICABLE OSHA REGULATIONS.

REINFORCED CONCRETE:

1. UNLESS NOTED OTHERWISE, ALL CONCRETE WORK, DETAILING, FABRICATION, AND PLACING OF REINFORCING AND CONCRETE SHALL BE GOVERNED BY THE LATEST REVISIONS OF:
   A. ACI 301 "SPECIFICATIONS FOR STRUCTURAL CONCRETE".
   B. CRSI RECOMMENDED PRACTICE OF PLACING REINFORCING BARS.
   C. ACI 306 AND ACI 305 FOR COLD AND HOT WEATHER CONCRETING RESPECTIVELY.
   D. ACI 350 "CODE REQUIREMENTS FOR ENVIRONMENTAL ENGINEERING CONCRETE STRUCTURES"
2. ALL CONCRETE SHALL BE NORMAL WEIGHT WITH A MAXIMUM UNIT WEIGHT OF 150 POUNDS PER CUBIC FOOT AND SHALL HAVE A MINIMUM 28 DAY COMPRESSIVE STRENGTH OF 4,000 PSI.
3. CONCRETE "SHAPING GROUT" SHALL BE A CONCRETE MIX CONTAINING NO COARSE AGGREGATE AND SHALL HAVE A MINIMUM 28 DAY COMPRESSIVE STRENGTH OF 4,000 PSI.
4. PROVIDE A 3/4" CHAMFER AT ALL EXPOSED CONCRETE CORNERS.
5. REINFORCING STEEL SHALL CONFORM TO ASTM A 615, AND SHALL BE GRADE 60 U.N.O.
6. REINFORCING STEEL INDICATED TO BE WELDED SHALL CONFORM TO ASTM A 706, AND SHALL BE GRADE 60.
7. REINFORCING BAR LAP SPLICES SHALL BE CLASS "B" TENSION LAPS AND SHALL BE AS REQUIRED PER THE SCHEDULE ON SHEET S-1 UNLESS OTHERWISE NOTED. REINFORCING BAR HOOK DIMENSIONS SHALL BE AS REQUIRED PER THE SCHEDULE ON SHEET S1 UNLESS OTHERWISE NOTED.
8. UNLESS OTHERWISE NOTED ON THE DRAWINGS, THE FOLLOWING CONCRETE COVER SHALL BE PROVIDED OVER REINFORCEMENT:
   A. CONCRETE CAST AGAINST AND PERMANENTLY EXPOSED TO EARTH 3"
   B. ALL OTHER CONCRETE 2"
9. WHERE SLEEVES ARE SHOWN, CONTRACTOR SHALL SLIGHTLY ADJUST REINFORCING BAR LOCATION AROUND SLEEVE AS MUCH AS PRACTICAL. REINFORCING BARS SHALL NOT BE CUT UNLESS SHOWN OTHERWISE ON THE DRAWINGS, OR UNLESS AGREED TO BY THE OWNER'S REPRESENTATAIVE OR STRUCTURAL ENGINEER ON A CASE BY CASE BASIS.
10. UNLESS OTHERWISE NOTED, ALL HORIZONTAL CONSTRUCTION JOINTS IN CONCRETE WALLS SHALL HAVE A 1/4" FULL AMPLITUDE ROUGHENED SURFACE. ALL OTHER CONSTRUCTION JOINTS SHALL BE KEYED.
11. UNLESS OTHERWISE NOTED, ALL CONSTRUCTION JOINTS IN WALLS SHALL BE LOCATED SUCH THAT NO MORE THAT FORTY (30) LINEAR FEET OF CONCRETE SHALL BE PLACED AT A GIVEN TIME WITH A MINIMUM SEVEN (7) DAY TIME FRAME BETWEEN ADJACENT POURS. ALTERNATE CONSTRUCTION JOINTS MAY BE SUBMITTED TO THE ENGINEER FOR APPROVAL. HORIZONTAL CONSTRUCTION JOINTS IN WALLS ARE OPTIONAL. THE CONTRACTOR MAY EMPLOY ADDITIONAL JOINTS WITH WATERSTOPS IF APPROVED BY THE ENGINEER.

STRUCTURAL STEEL:

1. UNLESS NOTED OTHERWISE, DESIGN, DETAILING, FABRICATION, AND ERECTION OF STRUCTURAL STEEL SHALL BE IN ACCORDANCE WITH THE AISC "MANUAL OF STEEL CONSTRUCTION", NINTH EDITION AND THE AISC CODE OF STANDARD PRACTICE.
2. ALL STEEL WIDE FLANGE SHAPES SHALL CONFORM TO ASTM A-992 (Fy=50 KSI MIN.). ALL OTHER STRUCTURAL STEEL SHALL CONFORM TO ASTM A-36, U.N.O.
3. TUBE STEEL SHALL CONFORM TO ASTM A500, GRADE B (Fy=46 KSI).
4. STEEL PIPE SHALL CONFORM TO ASTM A53, GRADE B.
5. ALL WELDING SHALL BE DONE BY WELDERS CURRENTLY CERTIFIED BY THE AMERICAN WELDING SOCIETY (AWS) AS HAVING PASSED AWS QUALIFICATION TESTS FOR THE TYPE OF WELDING THEY ARE TO PERFORM. ALL WELDERS SHALL USE E70XX ELECTRODES AND SHALL CONFORM TO AWS STANDARDS.
6. ALL EXPOSED STRUCTURAL STEEL SHALL BE HOT-DIPPED GALVANIZED UNLESS OTHERWISE NOTED.

FIBERGLASS GRATING:

1. FIBERGLASS GRATING SHALL BE "MCNICHOLS MOLDED FIBERGLASS GRATING" USING MSVFR POLYESTER RESIN WITH AN INTEGRAL GRIT SURFACE (OR APPROVED GRATING EQUAL) AND SHALL HAVE THE FOLLOWING PROPERTIES:
   A. 1-1/2" HEIGHT
   B. 1-1/2" x 1-1/2" SQUARE MESH PATTERN WITH 70 PERCENT OPEN AREA.
   C. INTEGRAL GRIT SURFACE WITH 3/16" DEPTH
   D. COLOR: GRAY

COORDINATION:

1. STRUCTURAL DRAWINGS SHALL BE USED IN CONJUNCTION WITH, AND COORDINATED WITH CIVIL AND OTHER CONTRACT DOCUMENTS.
2. COORDINATE THE EXACT SIZE AND LOCATION OF ALL SLEEVES AND OPENINGS THROUGH CONCRETE SLABS AND CONCRETE WALLS WITH CIVIL DRAWINGS.

REBAR SPLICE AND HOOK SCHEDULE

REBAR SPLICE AND HOOK DIMENSIONS IN REINF. CONCRETE

F'c = 4,000 PSI

ASTM BAR SIZE	LD	CLASS B LAP	TOP BAR LAP	LDH
3	12"	12"	16"	7 1/2"
4	12"	15"	20"	9 1/2"
5	15"	19"	24"	12"
6	18"	23"	29"	14 1/2"
7	25"	33"	43"	17"
8	29"	37"	49"	19"

NOTES:

TOP BAR - DEFINED AS A BAR LOCATED SUCH THAT 12 IN. OR MORE OF FRESH CONCRETE IS CAST IN THE MEMBER BELOW THE SPLICE.

MINIMUM OUTSIDE RADIUS OF BEND, R, SHALL BE 4db.

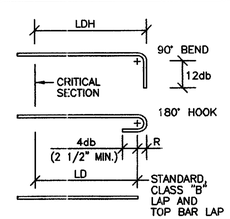

LD - STANDARD DEVELOPMENT LENGTH OF BAR

LDH - STANDARD DEVELOPMENT LENGTH OF HOOK

F'c - SPECIFIED COMPRESSIVE STRENGTH OF CONCRETE

db - BAR DIAMETER PER ASTM

STRUCTURAL ABBREVIATION LIST

A.F.F.	ABOVE FINISHED FLOOR	J.B.	JOIST BEARING
ARCH.	ARCHITECTURAL	KSI	KIPS PER SQUARE INCH
B.S.	BOTH SIDES	LLH	LONG LEG HORIZONTAL
BOT.	BOTTOM	LLV	LONG LEG VERTICAL
C=	CAMBER=	MAX.	MAXIMUM
CF	CUBIC FOOT	MECH.	MECHANICAL
CMU	CONCRETE MASONRY UNIT	MIN.	MINIMUM
CLR.	CLEAR	MPH	MILES PER HOUR
COL.	COLUMN	N.T.S.	NOT TO SCALE
CONC.	CONCRETE	NO.	NUMBER
CONT.	CONTINUOUS	#	NUMBER
DET.	DETAIL	O.C.	ON CENTER
DIA.	DIAMETER	PSI	POUNDS PER SQUARE INCH
DIM.	DIMENSION	PSF	POUNDS PER SQUARE FOOT
EA.	EACH	R	RADIUS
ELEV.	ELEVATION	REINF.	REINFORCING
EQ.	EQUAL	REQ'D	REQUIRED
EQUIP.	EQUIPMENT	SIM.	SIMILAR
EXIST.	EXISTING	STD.	STANDARD
EXP.	EXPANSION	STRU.	STRUCTURAL
EXT.	EXTERIOR	TS	TUBE STEEL
FIN.	FINISH	T.O.S.	TOP OF STEEL
FTG.	FOOTING	TYP.	TYPICAL
GALV.	GALVANIZED	U.N.O.	UNLESS NOTED OTHERWISE
GA.	GAUGE	V.I.F.	VERIFY IN FIELD
HSS	HOLLOW STRUCTURAL SECTION	VERT.	VERTICAL
HORIZ.	HORIZONTAL	W.W.F.	WELDED WIRE FABRIC
INT.	INTERIOR	W.P.	WORK POINT

Dewberry

Dewberry & Davis, Inc.
2301 REXWOODS DRIVE
SUITE 200
RALEIGH, NC 27607
PHONE: 919.881.9939
FAX: 919.881.9923

JOHNSTON COUNTY LANDFILL EQUALIZATION FACILITY
JOHNSTON COUNTY, NC

SEAL

KEY PLAN

FINAL DRAWING
NOT RELEASED FOR CONSTRUCTION

SCALE

No.	DATE	BY	Description

REVISIONS

DRAWN BY	DETAILS
APPROVED BY	EAS
CHECKED BY	JAW
DATE	OCTOBER 2007

TITLE

GENERAL STRUCTURAL NOTES AND DETAILS

PROJECT NO. 50003959

S1

SHEET NO. 8 OF 12

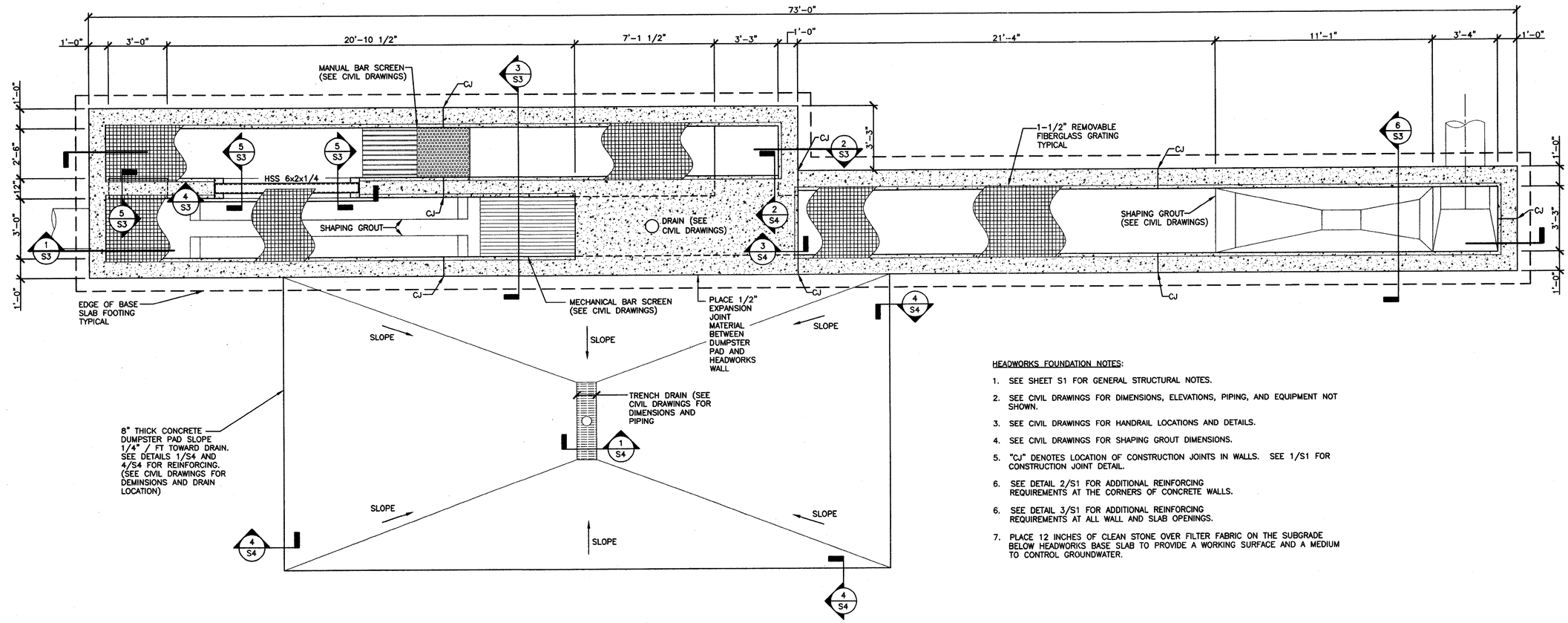

1/S2 HEADWORKS - FOUNDATION PLAN
SCALE: 3/8" = 1'-0"

HEADWORKS FOUNDATION NOTES:

1. SEE SHEET S1 FOR GENERAL STRUCTURAL NOTES.
2. SEE CIVIL DRAWINGS FOR DIMENSIONS, ELEVATIONS, PIPING, AND EQUIPMENT NOT SHOWN.
3. SEE CIVIL DRAWINGS FOR HANDRAIL LOCATIONS AND DETAILS.
4. SEE CIVIL DRAWINGS FOR SHAPING GROUT DIMENSIONS.
5. "CJ" DENOTES LOCATION OF CONSTRUCTION JOINTS IN WALLS. SEE 1/S1 FOR CONSTRUCTION JOINT DETAIL.
6. SEE DETAIL 2/S1 FOR ADDITIONAL REINFORCING REQUIREMENTS AT THE CORNERS OF CONCRETE WALLS.
6. SEE DETAIL 3/S1 FOR ADDITIONAL REINFORCING REQUIREMENTS AT ALL WALL AND SLAB OPENINGS.
7. PLACE 12 INCHES OF CLEAN STONE OVER FILTER FABRIC ON THE SUBGRADE BELOW HEADWORKS BASE SLAB TO PROVIDE A WORKING SURFACE AND A MEDIUM TO CONTROL GROUNDWATER.

Dewberry

Dewberry & Davis, Inc.
2301 REDWOODS DRIVE
SUITE 200
RALEIGH, NC 27607
PHONE: 919.881.9939
FAX: 919.881.9923

JOHNSTON COUNTY LANDFILL EQUALIZATION FACILITY
JOHNSTON COUNTY, NC

SEAL

KEY PLAN

FINAL DRAWING
NOT RELEASED FOR CONSTRUCTION

SCALE

No.	DATE	BY	Description

REVISIONS

DRAWN BY CHD
APPROVED BY EAS
CHECKED BY JAW
DATE OCTOBER 2007

TITLE
HEADWORKS FOUNDATION PLAN

PROJECT NO. 50003959

S2

SHEET NO. 9 OF 12

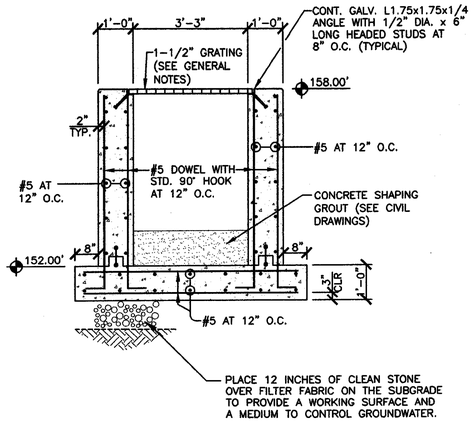

6 / S3 PARSHALL FLUME SECTION
SCALE: 3/4" = 1'-0"

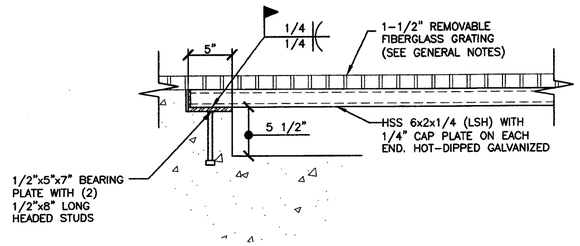

4 / S3 EMERGENCY OVERFLOW WEIR DETAIL
SCALE: 1-1/2" = 1'-0"

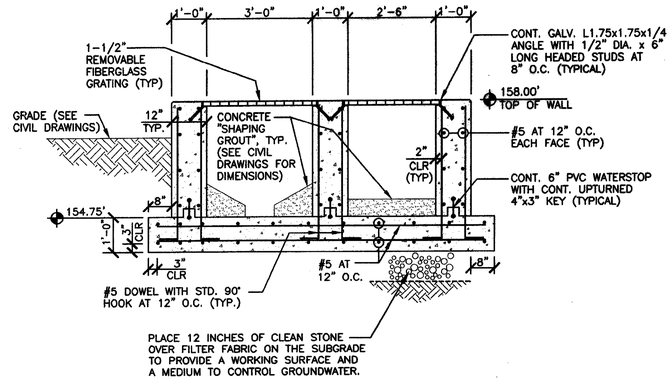

3 / S3 HEADWORKS SECTION
SCALE: 1/2" = 1'-0"

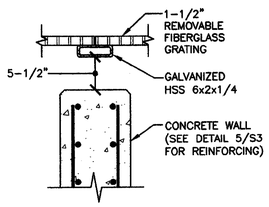

5 / S3 EMERGENCY OVERFLOW WEIR SECTION
SCALE: 1" = 1'-0"

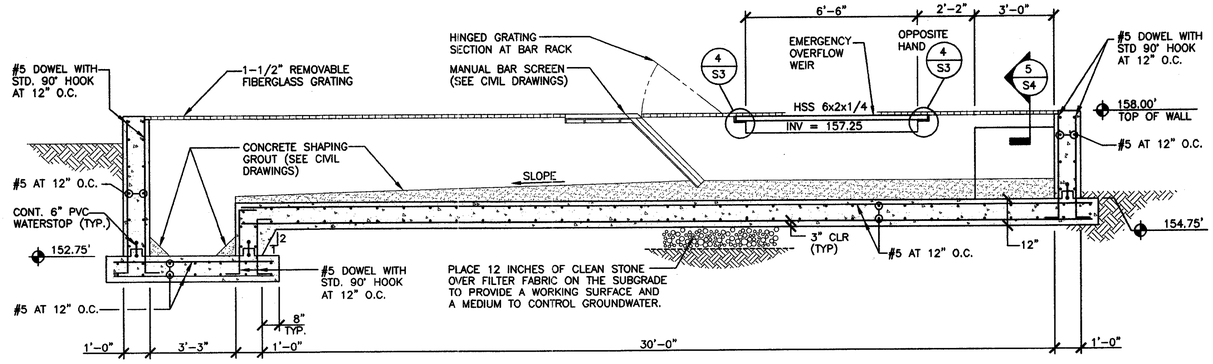

2 / S3 MANUAL BAR SCREEN SECTION
SCALE: 3/8" = 1'-0"

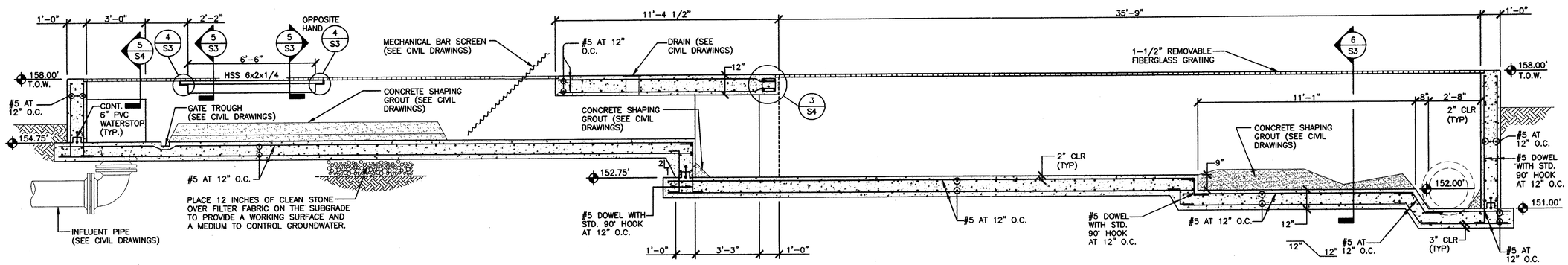

1 / S3 HEADWORKS SECTION
SCALE: 3/8" = 1'-0"

Dewberry

Dewberry & Davis, Inc.
2301 REXWOODS DRIVE
SUITE 200
RALEIGH, NC 27607
PHONE: 919.881.9930
FAX: 919.881.9923

JOHNSTON COUNTY LANDFILL EQUALIZATION FACILITY
JOHNSTON COUNTY, NC

SEAL

KEY PLAN

FINAL DRAWING
NOT RELEASED FOR CONSTRUCTION

SCALE

No.	DATE	BY	Description

REVISIONS

DRAWN BY	CHD
APPROVED BY	EAS
CHECKED BY	JAW
DATE	OCTOBER 2007

TITLE
HEADWORKS SECTIONS AND DETAILS

PROJECT NO. 50003959

S3

SHEET NO. 10 OF 12

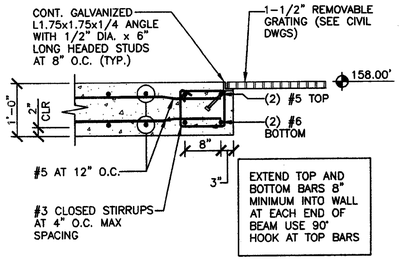

3 / S4 CONCRETE BEAM SECTION
SCALE: 3/4" = 1'-0"

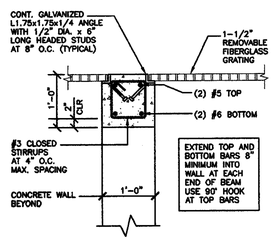

5 / S4 CONCRETE BEAM SECTION
SCALE: 3/4" = 1'-0"

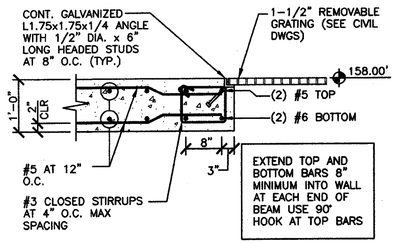

2 / S4 CONCRETE BEAM SECTION
SCALE: 3/4" = 1'-0"

DUMPSTER PAD NOTES:

1. SEE CIVIL DRAWINGS FOR PAD DIMENSIONS AND LOCATION.
2. SEE CIVIL DRAWINGS FOR PAD ELEVATION AND FINAL GRADING ELEVATIONS.

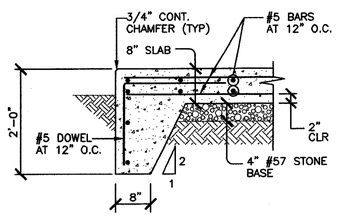

4 / S4 DUMPSTER PAD SECTION
SCALE: 3/4" = 1'-0"

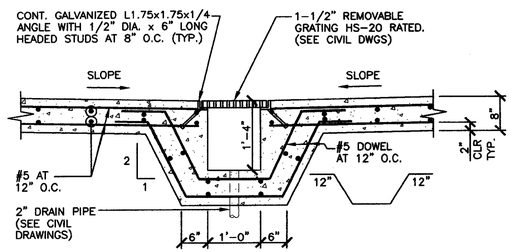

1 / S4 DUMPSTER PAD TRENCH DRAIN SECTION
SCALE: 3/4" = 1'-0"

Dewberry

Dewberry & Davis, Inc.
2301 REXWOODS DRIVE
SUITE 200
RALEIGH, NC 27607
PHONE: 919.881.9939
FAX: 919.881.9923

JOHNSTON COUNTY LANDFILL EQUALIZATION FACILITY
JOHNSTON COUNTY, NC

SEAL

KEY PLAN

FINAL DRAWING
NOT RELEASED FOR CONSTRUCTION

SCALE

No.	DATE	BY	Description

REVISIONS

DRAWN BY	CHD
APPROVED BY	EAS
CHECKED BY	JAW
DATE	OCTOBER 2007

TITLE
HEADWORKS SECTIONS AND DETAILS

PROJECT NO. 50003959

S4

SHEET NO. 11 OF 12

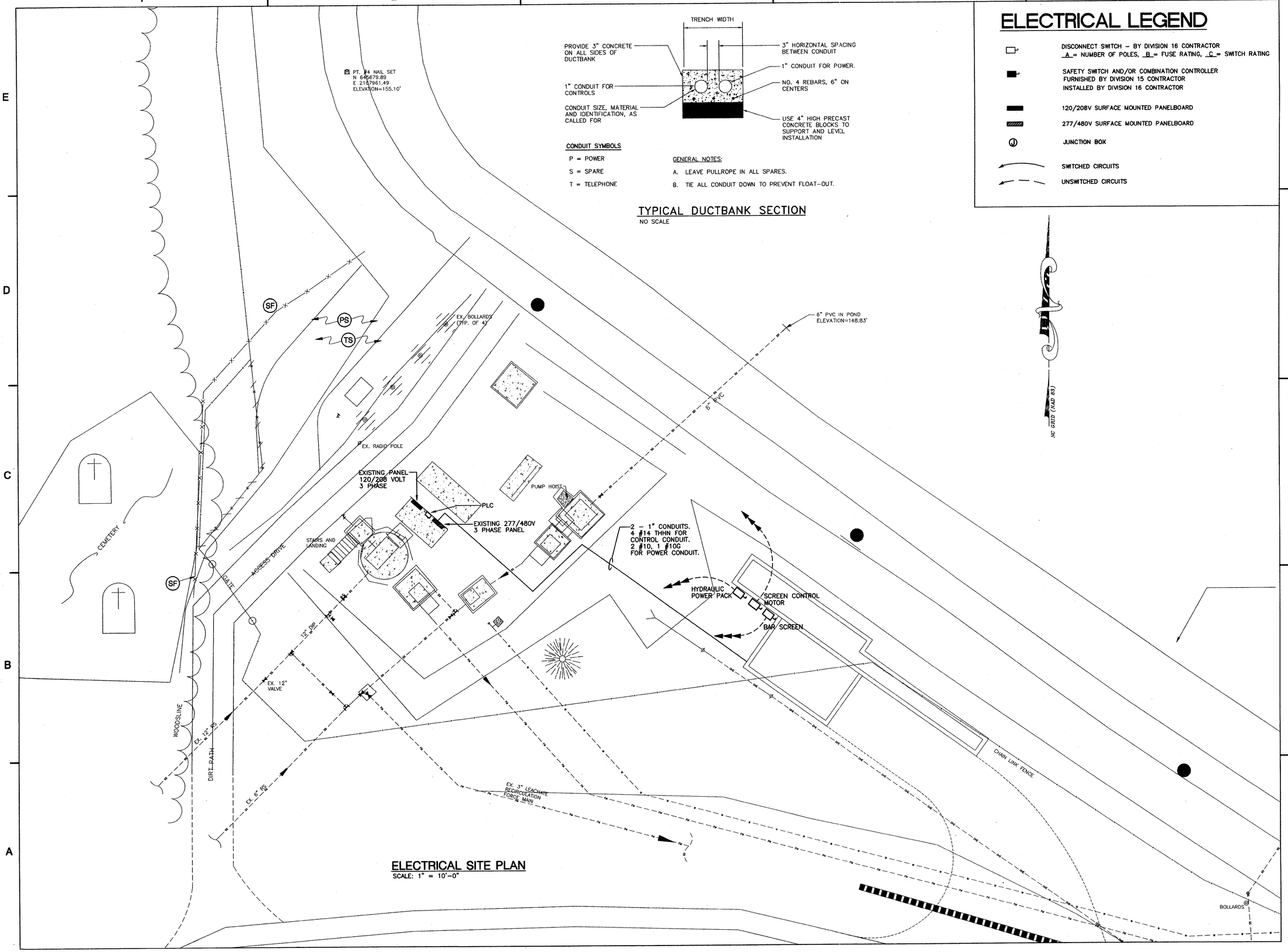

ELECTRICAL SITE PLAN

SCALE: 1" = 10'-0"

CONDUIT SYMBOLS

P = POWER

S = SPARE

T = TELEPHONE

GENERAL NOTES:

A. LEAVE PULLROPE IN ALL SPARES.

B. TIE ALL CONDUIT DOWN TO PREVENT FLOAT-OUT.

TYPICAL DUCTBANK SECTION

NO SCALE

ELECTRICAL LEGEND

- DISCONNECT SWITCH - BY DIVISION 16 CONTRACTOR _A_ = NUMBER OF POLES, _B_ = FUSE RATING, _C_ = SWITCH RATING
- SAFETY SWITCH AND/OR COMBINATION CONTROLLER FURNISHED BY DIVISION 15 CONTRACTOR INSTALLED BY DIVISION 16 CONTRACTOR
- 120/208V SURFACE MOUNTED PANELBOARD
- 277/480V SURFACE MOUNTED PANELBOARD
- JUNCTION BOX
- SWITCHED CIRCUITS
- UNSWITCHED CIRCUITS

Dewberry

Dewberry & Davis, Inc.
2301 REDWOODS DRIVE
SUITE 200
RALEIGH, NC 27607
PHONE: 919.881.9859
FAX: 919.881.9923

JOHNSTON COUNTY LANDFILL EQUALIZATION FACILITY

JOHNSTON COUNTY, NC

SEAL

NORTH CAROLINA PROFESSIONAL SEAL 023851 ENGINEER CASTLE E. DAVIDSON

KEY PLAN

FINAL DRAWING

NOT RELEASED FOR CONSTRUCTION

SCALE

0' 10' 20'

SCALE: 1" = 10'

No.	DATE	BY	Description

REVISIONS

DRAWN BY

APPROVED BY ALB

CHECKED BY

DATE SEPTEMBER, 2007

TITLE

ELECTRICAL SITE PLAN

PROJECT NO. 50003959

E1

SHEET NO. 12 OF 12