DOC ID 15157
5103-MSW
9-13-11 DCW

Progress Report

Johnston County MSW Landfill - Phase 5
Leachate Recirculation Facilities
Johnston County, North Carolina

Prepared For:

Johnston County Department of Public Utilities
309 E. Market Street
Smithfield, North Carolina 27577

Prepared By:

G.N. Richardson & Associates, Inc.
Engineering and Geological Services
14 N. Boylan Avenue
Raleigh, North Carolina 27603

June 2003

G.N. RICHARDSON & ASSOCIATES, INC.
Engineering and Geological Services

TRANSMITTAL FORM

If enclosures are not as noted or
if you require additional information,
please notify us immediately

JUN 2003
Received
Solid Waste
Section

RECEIVED
Solid Waste
JUN 13 2003
MANAGEMENT DIV.

June 13, 2003

Mr. Ed Mussler, P.E.
NC DENR Division of Waste Management
401 Oberlin Road, Suite 150
Raleigh, NC 27605
(919) 733-0692

SUBJECT: **Johnston County Landfill - Leachate Recirc. Progress Report**

GNRA PROJECT NO: **JOHNSTON-2**

We are sending you the following items:

COPIES	ITEM	DESCRIPTION
2	Binders	Progress Report

These are transmitted as checked below:

[ ] For Information
[ ] As Requested
[ ] For Review and Comments
[ ] For Revision
[X] **For Approval**
[ ] Approved
[ ] Approved as Noted
[ ] Approved as Noted-Revise and Resubmit
[ ] Not Approved-Revise and Resubmit
[ ] For Record and File
[ ] Submittal
[ ] For Recording

REMARKS: Ed: Let me know if you need any further info. Thanks!

cc:

Pieter K. Scheer, P.E.

14 N. BOYLAN AVENUE • RALEIGH, NORTH CAROLINA 27603 • TEL. 919-828-0577 • FAX. 919-828-3899

Progress Report

Johnston County MSW Landfill - Phase 5
Leachate Recirculation Facilities
Johnston County, North Carolina

JUN 2003
Received
Solid Waste
Section

Prepared For:

Johnston County Department of Public Utilities
309 E. Market Street
Smithfield, North Carolina 27577

Prepared By:

G.N. Richardson & Associates, Inc.
Engineering and Geological Services
14 N. Boylan Avenue
Raleigh, North Carolina 27603

June 2003

Progress Report

Johnston County MSW Landfill - Phase 5
Leachate Recirculation Facilities
Johnston County, North Carolina

Prepared for:
Johnston County Department of Public Utilities
Smithfield, North Carolina

To the Attention of:
Mr. Haywood Phthisic, Director

GNRA Project No. JOHNSTON-2

NORTH CAROLINA PROFESSIONAL SEAL 021666 ENGINEER PIETER K. SCHEER

6/12/03

Pieter K. Scheer, P.E.
Project Manager

Gregory N. Richardson, Ph.D., P.E.
President

June 2003

G.N. Richardson & Associates, Inc.
Engineering and Geological Services
14 N. Boylan Avenue
Raleigh, North Carolina 27603

JOHNSTON COUNTY
LEACHATE RECIRCULATION FACILITIES
PROGRESS REPORT

TABLE OF CONTENTS

Page

1.0 INTRODUCTION 1

2.0 PROJECT CONSTRUCTION 1
- 2.1 General 1
- 2.2 Reference Documents 2
- 2.3 Project Participants 2
  - 2.3.1 Owner 2
  - 2.3.2 Engineer 3
  - 2.3.3 Contractor 3
- 2.4 Facility Components 3
  - 2.4.1 Leachate Recirculation Forcemain 3
  - 2.4.2 Leachate Recirculation Pump 4
  - 2.4.3 Leachate Recirculation Galleries 4
- 2.5 Photographic Documentation 4

3.0 FACILITY OPERATIONS 4
- 3.1 General Procedures 4
- 3.2 Leachate Recirculation Quantities 5
- 3.3 Leachate Quality Data 6
- 3.4 General Observations and Comments 6

4.0 RECOMMENDATIONS 7

APPENDICES

- Appendix A Photographic Documentation
- Appendix B Recirculation System Component Information
- Appendix C Leachate Recirculation Monthly Reporting Forms
- Appendix D Leachate Quality Data
- Appendix E Project Drawings

JOHNSTON COUNTY
LEACHATE RECIRCULATION FACILITIES
PROGRESS REPORT

1.0 INTRODUCTION

This report has been prepared to document the construction and initial operation of the leachate recirculation facilities at the Johnston County Landfill facility. The landfill facility is located on County Home Road off of Highway 210 near Smithfield, North Carolina and is owned and operated by Johnston County under State Solid Waste Permit No. 51-03. Leachate generated by the County's lined landfill units (Phase 5 and recently active Phase 4A) is recirculated back into the Phase 5 unit. This report is intended to satisfy the reporting required for the first 120 days of operation.

2.0 PROJECT CONSTRUCTION

2.1 General

The leachate recirculation system as constructed included the installation of a force main, installation of a dedicated recirculation pump within an existing pump station, and installation of eleven recirculation galleries within the waste mass of the Phase 5 landfill unit. Each of these components is described below in **Section 2.4**. As-built drawings of the system are provided in **Appendix E**. The construction of the recirculation facilities took place in three phases as follows:

Phase	Description	Dates
1	Construction of Force Main and Recirculation Galleries 1-1 through 1-7 (See Note 1)	06/18/01 to 09/16/01
2	Construction of Recirculation Galleries 1-8 and 1-9	06/19/02 to 08/3/02
3	Construction of Recirculation Galleries 2-2 and 2-5 (See Note 2)	11/04/02 to 12/19/02

Notes:

1. Galleries 1-1 through 1-4 were renumbered in reverse order from the numbering shown in the approved leachate recirculation plan permit drawings.
2. Galleries 2-2 and 2-5 were labeled as 2-1 and 2-2, respectively, in the approved leachate recirculation plan permit drawings.

2.2 Reference Documents

The leachate recirculation facilities were constructed in accordance with the following documents.

Construction Documents - Johnston County - Leachate Recirculation Facilities:
Includes general and technical specifications, CQA manual, and contract addenda prepared by G.N. Richardson & Associates and dated May, 2001.

Construction Drawings - Johnston County - Leachate Recirculation Facilities:
Includes construction drawings prepared by G.N. Richardson & Associates and dated May, 2001.

Leachate Recirculation Plan - Johnston County MSWLF - Phase 5:
Includes technical specifications and permit drawings prepared by G.N. Richardson & Associates as revised through February, 2001 (Approved by NCDWM - March 27, 2001).

2.3 Project Participants

The following parties were involved in the construction of the leachate recirculation facilities:

2.3.1 Owner

Johnston County Department of Public Utilities
309 E. Market Street, P.O. Box 2263
Smithfield, NC 27577
Phone: (919) 989-5075
Fax: (919) 934-7174

Contacts: Haywood Phthisic, Public Utilities Director
Tim Broome, P.E., Director of Engineering and Infrastructure
Charley Griggs, Construction Inspector

Johnston County Solid Waste Management Department
680 County Home Road, P.O. Box 2263
Smithfield, NC 27577
Phone: (919) 934-4576
Fax: (919) 989-7152

Contact: Rick Proctor, Solid Waste Manager

2.3.2 Engineer

G.N. Richardson & Associates, Inc. (GNRA)
14 N. Boylan Ave.
Raleigh, NC 27603
Phone: (919) 828-0577
Fax: (919) 828-3899

Contacts: Pieter Scheer, P.E., Project Manager
Stacey Smith, P.E., Project Engineer
Byron Hackney, Field Technician

2.3.3 Contractor

J.F. Wilkerson Contracting Co., Inc.
P.O. Box 183
Morrisville, NC 27560
Phone: (919) 467-1829
Fax: (919) 467-6269

Contacts: Joe Wilkerson, President
Jerry Godfrey, Site Superintendent

2.4 Facility Components

The leachate recirculation facilities include a HDPE forcemain and associated valving, a dedicated recirculation pump, and a series of recirculation galleries within the waste. Each of these components is discussed below. Information on these components is provided in **Appendix B**. The location of the components is as shown on the project drawings provided in **Appendix E**.

2.4.1 Leachate Recirculation Forcemain

The leachate recirculation forcemain consists of approximately 4,700 linear feet of 3-inch diameter HDPE (SDR 11) pipe and fittings (Driscopipe 1000 Series). Along the forcemain are installed one 4-inch gate valve (Clow Valve Co.) (at the connection with the existing forcemain), four air relief valves (Crispin Model M10) (at various high points in the line), and twelve 3-inch isolation (ball) valves (Asahi/America) (to control flow to various portions of the system). The forcemain was placed a minimum of approximately 3 feet below ground surface and locator balls were placed in the trench every 100 feet and at bends during backfilling such that the pipe can be located easily by County personnel if necessary.

2.4.2 Leachate Recirculation Pump

One submersible leachate recirculation pump was installed in place of an existing pump in the existing pump station at the leachate lagoon for recirculating leachate. This pump is an EPG SurePump Model VSD 17-5 and is rated for a flow of 50 gpm at a head of 210 feet. The recirculation pump is equipped with on-off controls at the pump station.

2.4.3 Leachate Recirculation Galleries

Each injection gallery extends horizontally from the face of the final cover into the waste a distance of approximately 400 (±10%) feet in length. Each injection gallery consists of a trench drain containing a 3 inch diameter HDPE (SDR 11) leachate injection pipe, a 4 inch diameter HDPE (SDR 11) landfill gas (LFG) collection pipe, and a backfill of tire chips. Each leachate injection gallery pipe is perforated with ⅛-inch diameter holes every 10-feet in the trenches. The LFG piping is perforated with four rows of ½-inch diameter holes every 6-inches. The recirculation piping is fitted at its exposed end with a positive on-off valve connected to the forcemain and a check valve and cleanout are also provided. The LFG piping was stubbed out at the end of each gallery and fitted with a bolted blind flange for future connection to LFG control devices.

2.5 Photographic Documentation

Photos documenting the construction of the leachate recirculation facilities can be found in **Appendix A**.

3.0 FACILITY OPERATIONS

3.1 General Procedures

General operations procedures are as follows:

- Leachate to be recirculated is collected in the existing leachate pump station located adjacent to the existing leachate storage lagoon.
- Leachate is pumped from the pump station to the injection galleries using the leachate recirculation pump.
- Flow to each injection gallery is regulated using isolation valves.
- Leachate is pumped into individual injection galleries in metered volumes (slugs) designed to prevent localized saturation of the waste and stability problems. Injection is sequenced between the galleries and recorded on data forms (see **Appendix C**).

3.2 Leachate Recirculation Quantities

Other than a small amount of leachate that was recirculated between September 2001 and January 2002 to test the initial seven installed galleries, the County formally began recirculating leachate on January 7, 2002. Note that during this period, the County placed a lift of waste over the installed galleries.

To date, Johnston County has recirculated the following quantities of leachate:

Month	Precipitation (inches)	Leachate Recirculated (Gallons)	Injection Galleries Used
2002:			
January	5.0	102,677	1-1, 1-2, 1-3, 1-4, 1-5, 1-6, 1-7
February	1.3	116,950	1-1, 1-2, 1-4, 1-5, 1-6, 1-7
March	1.5	53,707	1-1, 1-2, 1-4
April	0.5	48,608	1-1, 1-2, 1-3, 1-4, 1-5, 1-6, 1-7
May	1.2	43,521	1-1, 1-2, 1-4, 1-5, 1-6
June	1.0	59,178	1-1, 1-2, 1-3, 1-4, 1-5, 1-6, 1-7
July	7.0	3,488	1-7
August	5.8	0	
September	2.3	0	
October	6.0	0	
November	3.3	0	
December	3.8	0	
2003:			
January	3.1	0	
February	4.5	0	
March	7.9	0	
April	2.7	0	
May	4.5	53,627	1-1, 1-2, 1-3, 1-5, 1-8, 1-9

Note that from August 2002 through April 2003, no leachate was recirculated. Initially this was due to the very dry conditions whereby little leachate was being generated. Beginning in fall 2002, this was due to the excessively wet conditions at the site.

3.3 Leachate Quality Data

Leachate quality is monitored (Temperature, pH, conductivity, BOD, COD, metals, volatile organics, etc.) by the County during regularly scheduled site monitoring activities. Leachate quality data is provided in **Appendix D** for the following dates:

Pre-Recirculation (Baseline Data):

April 9, 2001

October 1, 2001

During Recirculation:

May 15, 2002

November 4, 2002

May 20, 2003

Based on a review of the data, no definitive trends can be established at this time. Future sampling events are expected to show changes in some of the measured parameters as the moisture content of the waste increases and the waste degradation process becomes accelerated.

3.4 General Observations and Comments

The following general observations and comments are made regarding the operation of the leachate recirculation facilities:

- Overall System Operation:

  All pipes, valves, air relief, gages, pumps, and other hardware seem to work as designed. Adjustments and repairs will continue to be made as necessary.

- Leachate Breakouts:

  There have been several breakouts that have occurred on the landfill side slopes due to the addition of leachate. Originally, a 6,000 gallon slug of leachate was injected into each recirculation gallery. This amount was reduced to 3,000 gallons to minimize breakouts. Also, additional cover has been added as needed to reduce

breakouts.

In addition to the operational modifications mentioned above, the County has had to cease the recirculation activities periodically during wet site conditions.

- Leachate Generation:

  Landfill personnel have not observed any sudden increases in leachate generation during or immediately after recirculation activities which would indicate that injected leachate is moving through the waste faster than normal or that head on the liner system might be excessive.

4.0 RECOMMENDATIONS

Based on the observations of the system operation thus far, the County plans to continue leachate recirculation operations in Phase 5.

In that the recirculation activities are expected to result in a measurable amount of settlement of the landfill cover and a corresponding creation of additional waste disposal volume over time, GNRA recommends that the County be allowed to delay the construction of the permitted final cover system during the operation of the leachate recirculation system. During this period, GNRA recommends that the County increase the thickness of their intermediate cover as required such that the overall soil cover thickness is at least 24 inches. As has been their practice with intermediate cover, the County will establish and maintain a vegetative cover of grass on the surface and plan to continue the use of wood chips in areas where erosion has been observed. Diversion berms and down pipes will also continue to be utilized by the County to route the flow of stormwater runoff to the perimeter drainage channels.

Also, GNRA recommends that settlement monitoring be conducted on an annual basis to monitor the effects of the recirculation system. This can be accomplished by setting up several settlement monitoring points on top of the landfill.

Appendix A

Photographic Documentation

Photo 1 (Connection to Existing PVC Forcemain)

Photo 2 (Construction of HDPE Forcemain Along E Side of Phase 5)

Photo 3 (Typical Isolation Valve)

Photo 4 (Tire Chips Used to Backfill Recirculation Trenches)

Photo 5 (Construction of Header Piping)

Photo 6 (Construction of a Recirculation Trench)

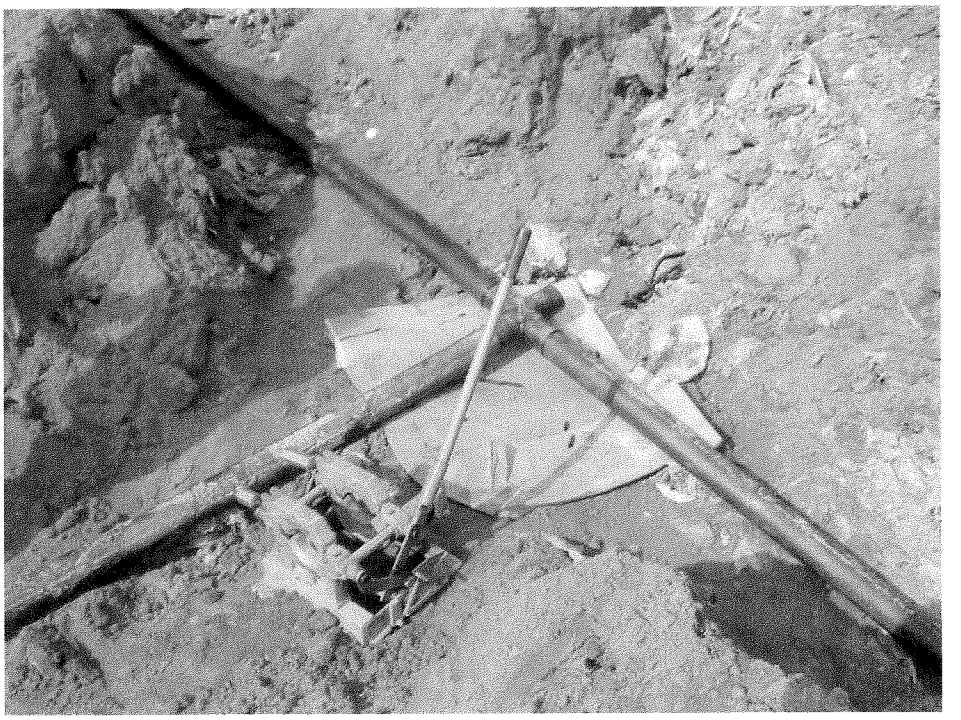

Photo 7 (Connection of Forcemain to Header Piping)

Photo 8 (Recirculation Pipe Cleanout)

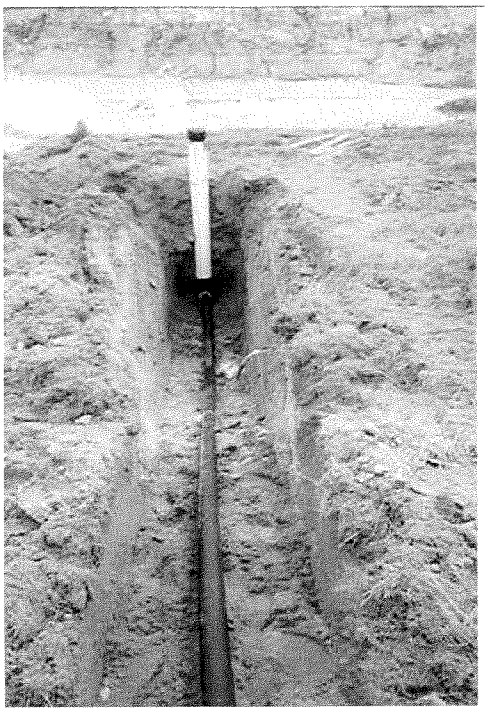

Photo 9 (Isolation Valve at Base of Slope)

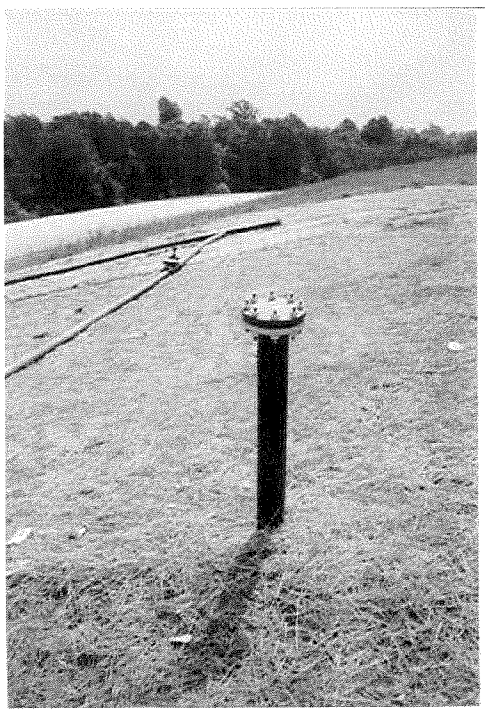

Photo 10 (LFG Piping Stubout)

Photo 11 (Recirculation Piping & Valves on Slope)

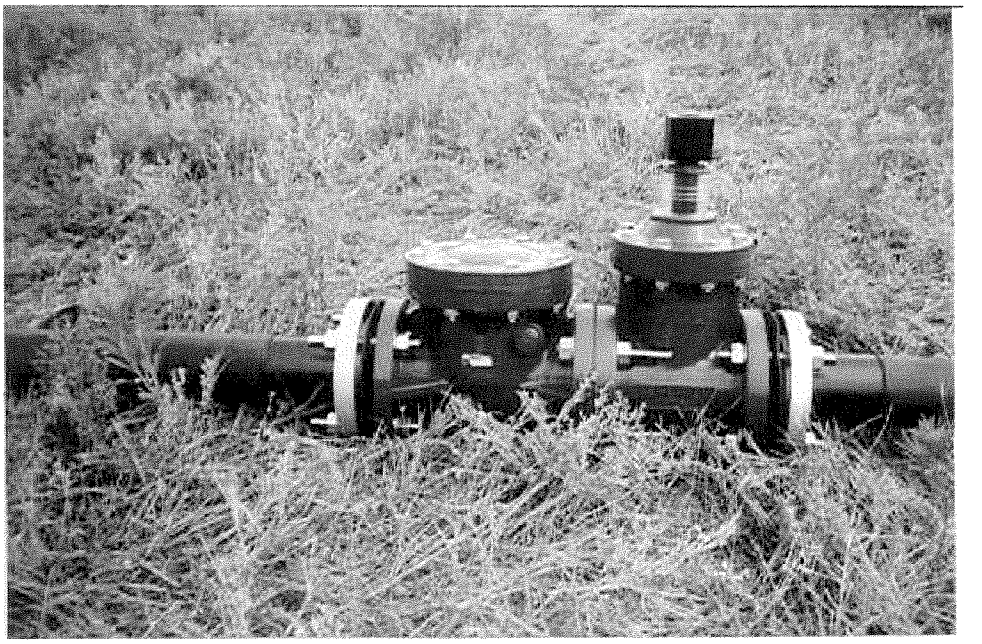

Photo 12 (Check & Ball Valves)

Appendix B

Recirculation System Component Information

DRISCOPIPE

(3)

J. F. Wilkerson Contracting Co., Inc.
☐ Approved
☒ Approved As Noted
☐ Not Approved
By M. Jones Date 5-15-01

Driscopipe® 1000 Polyethylene Piping Systems

Introduction

The Driscopipe® 1000 polyethylene piping system is lightweight, flexible and chemical and abrasion resistant, allowing it to be used in a number of diverse applications. Driscopipe 1000 is also protected from ultra-violet degradation and thermal degradation, giving it a long service and storage life in above ground, exposed installations. See your Phillips Driscopipe representative for details.

Specifications

Driscopipe 1000 is a PE 3408 high density, high extra molecular weight polyethylene piping system. It may be specified by ASTM D3350 as having a cell classification of PE 345444C. Dimensions and workmanship are specified by ASTM F714.

3" ⅓ 4"

A copy of nominal physical properties for Driscopipe 1000 is available from your Phillips Driscopipe representative. Sample specifications for water distribution, force main and gravity flow sewers are also available.

Chemical Resistance

Driscopipe 1000 has outstanding chemical resistance. Most chemicals, acids, salts and hot soils will not attack Driscopipe or cause it to degrade. It does not rust, rot or corrode. It does not promote or support algae or bacterial growth.

Flow Factors

Driscopipe polyethylene pipe has an extremely smooth inside surface. It maintains its excellent flow properties throughout its service life due to its excellent chemical and abrasion resistance. Because of its smooth walls and non-wetting characteristics, a higher flow capacity and a reduced friction loss is possible with driscopipe 1000, resulting in operating cost savings. A "C" factor of 150 is used with the Hazen-Williams equation for pressurized fluid flow and an "n" factor of .009 is used with the Manning Formula for gravity flow. Flow charts and additional system design information are available thorough your Phillips Driscopipe representative.

Direct Burial

Driscopipe 1000 is buried utilizing flexible pipe/soil system design practices. The pipe actually gains strength from the surrounding soil allowing it to

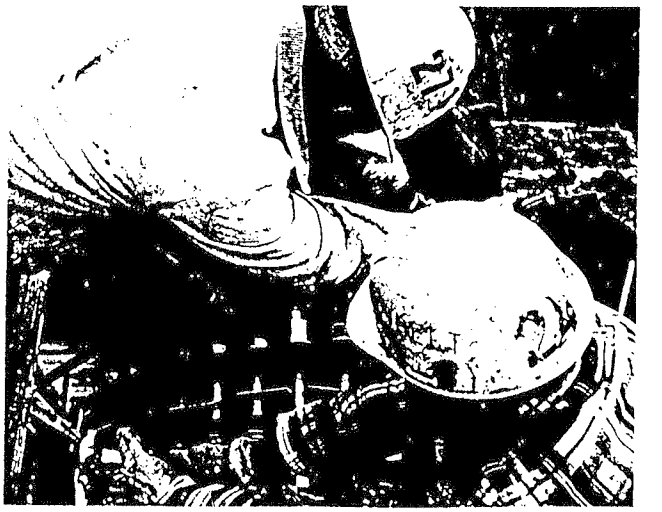

DRISCOPIPE

support additional loads. Through proper pipe and backfill selection, Driscopipe 1000 may be buried at depths in excess of 100 feet. At normal burial depths, a backfill of 85% of Standard Proctor density (AASHTO-99) can limit the ring deflection of Driscopipe to 2% of the original diameter.

Since Driscopipe pipe can be butt fused above ground in long lengths, narrow trench widths can be used to save on installation costs. Due to the ease of handling Driscopipe, it may be readily placed in the trench, thus necessitating a minimum amount of open trench. Trench and trench bottom, embedment materials, and bedding and installation practices are specified in ASTM D 2321.

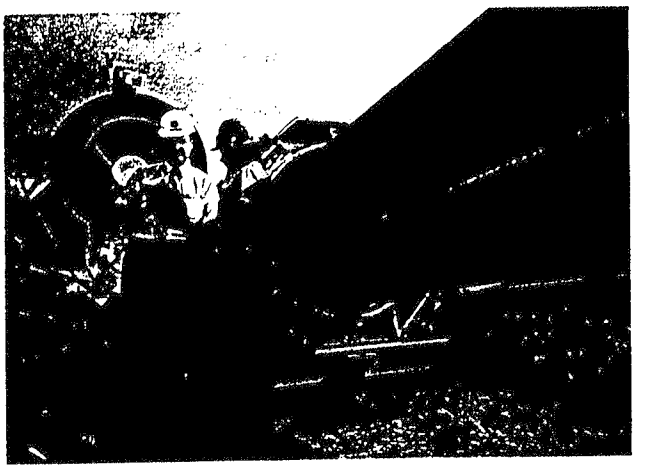

Primary Properties – Cell Classification 345444C – ASTM D3350-96*

Property	Test Method	0	1	2	3	4	5	6
1 - Density, g/cm³	D1505		0.910-0.925	0.926-0.940	**0.941-0.955**	>0.955		
2 - Melt index-condition E (gms/10 min)	D1238		>1.0	1.0-0.4	<0.4-0.15	**<0.15**		
3 - Flexural modulus, MPa (psi)	D790		<138 (<20,000)	138-<276 (<20,000-<40,000)	276-<552 (40,000-<80,000)	552-<758 (80,000-<110,000	**758-<1103 (110,000-160,000)**	>1103 (>160,000)
4 -Tensile strength at yield, MPa (psi)	D638		<15 (<2200)	15-<18 (2200-<2600)	18-<21 (2600-<3000)	**21-<24 (3000-<3500)**	24-<28 (3500-<4000)	>28 (>4000)
5 - Environmental stress crack resistance:	D1693							
a. Test condition			A	B	**C**			
b. Test duration, h			48	24	**192**			
c. Failure, max, %			50	50	**20**			
6 - Hydrostatic design basis, MPa (psi), (23°C)	D2837	NPR[a]	5.52 (800)	6.89 (1000)	8.62 (1250)	**11.03 (1600)**		
Color and UV Stabilizer		A Natural	B Colored	C **Black with 2% minimum carbon black**	D Natural with UV stabilizer	E Colored with UV		

[a]NPR = Not Pressure Rated

*NOTE: Refer to Driscopipe 1000 Data Sheet for complete nominal physical properties documentation, features/advantages/benefits, and listings of major industrial and municipal applications.

DRISCOPIPE

1000 series Data Sheet

http://www.driscopipe.com

Customer Benefits

High-quality Driscopipe 1000 is manufactured from high-density PE 3408 polyethylene pipe grade resin.

Butt Fusion Conditions: 75 psig interfacial fusion pressure required at 375-400°F (surface temp.)

This black, weather-resistant pipe exhibits...

High Slow Crack Growth Resistance

Excellent Flow Characteristics

Flexibility & Ease of Installation

Abrasion Resistance

Fatigue Endurance

Heat fusion joining

Suggested Industries and Applications

- **Acid / caustic lines**
- **Agriculture**
- **Aquaculture**
- **Brine**
- **Cement Plants**
- **Coal Slurry/ Coal Prep De-watering**
- **Dredging/ Sand/ Gravel**
- **Dual containment**
- **Fertilizer**
- **Fly ash lines**
- **Golf courses**
- **Hard Rock Disposal**
- **Hazardous Wastes**
- **High purity processes**
- **Ice Rinks**
- **Industrial**
- **Inorganic Chemicals**
- **Irrigation**
- **Leachate collection**
- **Marinas**
- **Metal (Cu, Al, Fe, etc.)**
- **Mining**
- **Organic Chemicals**
- **Petrochemicals**
- **Pulp/ Paper/ Wood**
- **River crossings**
- **Salt Mines**
- **Sludge piping**
- **Snow Melting/ Making**
- **Storage tank piping**
- **Sugar Mills**
- **Swimming Pools**
- **SX acid mining**
- **Tailings Slurry**
- **Temporary pipelines**
- **Utility/ process piping**

Available Sizes

¾" through 54" IPS sizes in various DRs

Specification Data

The resin, pipe, & fittings comply with these accepted (and other) industry standards . . .

ASTM F 714 (Pipe ≥ 3")

ASTM D 3261 (Molded Fittings)

Cell Classification
ASTM D 3350 - 345464C

ASTM D 3035 (Pipe < 3")

PPI - PE3408 Designation

11/23/99

Typical Physical Properties* of Driscopipe® 1000 (PE 3408) Polyethylene Pipe Resin

Property		Test Method	Unit	Value
Material Designation		PPI / ASTM	--------	PE 3408
Material Classification		ASTM D 3350	--------	Type III; PE34
Cell Classification		ASTM D 3350	--------	345464C
Density	(3)	ASTM D 1505	gms/cm^3	0.955
Melt Flow	(4)	ASTM D 1238(2.16/190)	gms/10 min.	0.11 ♦
Flex Modulus	(5)	ASTM D 790	psi	110,000
Tensile Strength	(4)	ASTM D 638	psi	3,200
PENT	(6)	ASTM F 1473	Hours	>100
HDB @ 73.4°F	(4)	ASTM D 2837	psi	1,600
U-V Stabilizer	(C)	ASTM D 1603	% C	> 2
Hardness		ASTM D 2240	Shore D	65
Tensile Strength @ Yield (Type IV Specimen)		ASTM D 638 (2"/min.)	psi	3,200
Tensile Strength @ Break (Type IV Specimen)		ASTM D 638	psi	5,000
Elongation at Break		ASTM D 638	%, minimum	750
Modulus of Elasticity (Young's Modulus)		ASTM D 638	psi	130,000
ESCR (Cond A,B, C: Mold. Slab)		ASTM D 1693	F_o, Hours	>5,000
(Compressed Ring - pipe)		ASTM F 1248	F_o, Hours	>3,500
'mpact Strength (IZOD) (.125" Thick)		ASTM D 256 (Method A)	in-lb/in. notch	42
Linear Thermal Expansion Coeff.		ASTM D 696	in/ in/ °F	1.2×10^{-4}
Thermal Conductivity		ASTM D 177	BTU-in/ft^2/ hrs/°F	2.7
Brittleness Temperature		ASTM D 746	°F	< -180
Vicat Softening Temperature		ASTM D 1525	°F	257

*This list of typical physical properties is intended for basic characterization of the material and does not represent specific determinations or specifications. The Physical properties values reported herein were determined on compression molded specimens prepared in accordance with Procedure C of ASTM D-1928 and may differ from specimens taken from the pipe.

♦ Average Melt Index value with a standard deviation of 0.01

This document reports accurate and reliable information to the best of our knowledge but our suggestions and recommendations cannot be guaranteed because the conditions of use are beyond our control. The user of such information assumes all risk connected with the use thereof. Phillips 66 Company and its subsidiaries assume no responsibility for the use of information presented herein and hereby expressly disclaim all liability in regards to such use.

To secure product information or leave a message for a sales engineer or technical service representative:
Phone: (800) 527-0662
Fax: (972) 669-5959
Web: www.driscopipe.com

PHILLIPS 66 Phillips Driscopipe
A DIVISION OF PHILLIPS PETROLEUM COMPANY

PPI PLASTICS PIPE INSTITUTE

Accredited by the Dutch Council for Certification
ABS Quality Evaluations Inc. Quality Assurance Certification
ACCREDITED REGISTRAR ANSI-RAB
ISO 9001
Certificate Number: 31547

11/23/99

J. F. Wilkerson Contracting Co., Inc.
☐ Approved
☒ Approved As Noted
☐ Not Approved
By M JONES Date 5-15-01

8

UNION FOUNDRY COMPANY

A Division of McWane, Inc.

2" - 24"
FLANGED - DUCTILE IRON
CLASS 125 STANDARD FITTINGS

Manufactured in Accordance With
ANSI/AWWA C-110 / A21.10
ANSI B16.1 Class 125 Standard
except as noted as "Manufacturer's Standard"

Sample Specification:

3" - 24" Flanged Fittings shall be ductile iron 250 pressure rated, and shall be produced in strict accordance with ANSI / AWWA C110 / A21.10 and ANSI Class 125 B16.1, and shall conform to details and dimensions published therein. All other items not listed in above specifications shall be Manufacturer's Standard.

Standard Class 125 template for drilling shall be used for all flanges. Drilling templates are in multiples of four, so that fittings may be made to face in any quarter. Bolt holes shall straddle the center line and are equally spaced. Misalignment of corresponding bolt holes of two opposing flanges shall not exceed 0.12 inches.

Flanges will be adequate for 250 psi working pressures, and should not be confused with Class 250 extra heavy flanges covered in ANSI B16.1, which are rated for 250 psi steam working pressure.

ITEMS INDICATED BY " - " ARE NOT CURRENTLY AVAILABLE. AS NEW ITEMS BECOME AVAILABLE, NEW SPECIFICATIONS SHEETS WILL BE ISSUED.

UFCO does not produce Class 250 B16.1 extra heavy flanges for 250 psi steam applications.

ALL PRESSURE RATINGS ARE 250 PSI WORKING PRESSURE FOR WATER UNLESS OTHERWISE SPECIFIED.

ALL FLANGE FITTINGS IN SIZES 2" THROUGH 12" ARE U / L APPROVED

ALL UFCO PRODUCTS ARE IN COMPLIANCE WITH NSF-61

UNION FOUNDRY COMPANY

Specifications and Dimensions

AWWA / ANSI C110 / A21.1; ANSI B 16.1
CLASS 125 FLANGED FITTINGS

DUCTILE IRON

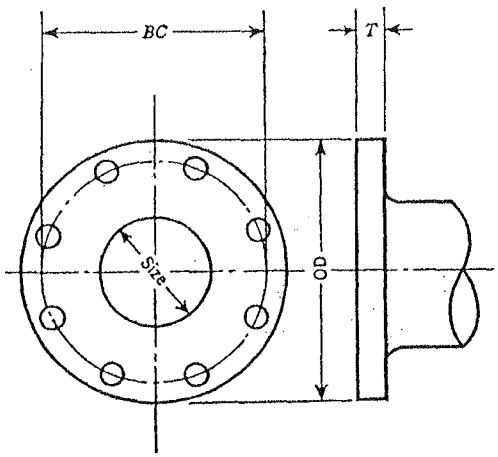

FLANGE DETAILS

Size	Dimensions in inches					Size of Full Face Gasket**	Size of Ring Gasket**	No. of Bolts
	OD	BC	T	Bolt hole Diameter	Bolt Diameter & Length			
2 *	6.00	4.75	.62±.12	3/4	5/8 x 2¼	2 x 6	2 x 4-1/8	4
3	7.50	6.00	.75±.12	3/4	5/8 x 2½	3 x 7½	3 x 5 3/8	4
4	9.00	7.50	.94±.12	3/4	5/8 x 3	4 x 9	4 x 6 7/8	8
6	11.00	9.50	1.00±.12	7/8	3/4 x 3½	6 x 11	6 x 8¾	8
8	13.50	11.75	1.12±.12	7/8	3/4 x 3½	8 x 13½	8 x 11	8
10	16.00	14.25	1.19±.12	1	7/8 x 4	10 x 16	10 x 13 3/8	12
12	19.00	17.00	1.25±.12	1	7/8 x 4	12 x 19	12 x 16 1/8	12
14	21.00	18.75	1.38±.19	1-1/8	1 x 4½	14 x 21	14 x 17¾	12
16	23.50	21.25	1.44±.19	1-1/8	1 x 4½	16 x 23½	16 x 20¼	16
18	25.00	22.75	1.56±.19	1-1/4	1 1/8 x 5	18 x 25	18 x 21 5/8	16
20	27.50	25.00	1.69±.19	1-1/4	1 1/8 x 5	20 x 27½	20 x 23 7/8	20
24	32.00	29.50	1.88±.19	1-3/8	1¼ x 5½	24 x 32	24 x 28¼	20

* Not included in AWWA C110.

** Union Foundry Company does not furnish gaskets for flange fittings. Size data is presented here for reference only.

NOTE: Unless otherwise specified, flanges will have bolt holes straddling the centerline and equally spaced. Misalignment of corresponding bolt holes of two opposing flanges shall not exceed 0.12 inches.

UNION FOUNDRY COMPANY

Specifications and Dimensions

AWWA / ANSI C110 / A21.1; ANSI B 16.1
CLASS 125 FLANGED FITTINGS

DUCTILE IRON

GENERAL DIMENSIONS

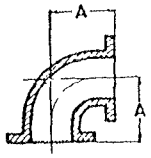

90° Bend

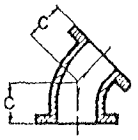

45° Bend

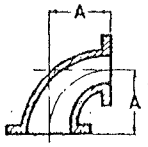

90° Reducing Bend

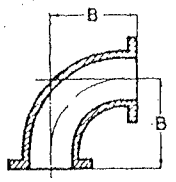

Long Radius 90° Bend

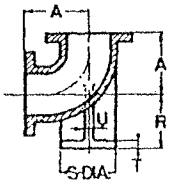

Base Bend

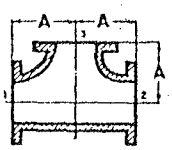

Tee

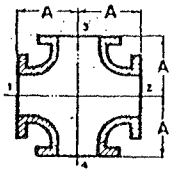

Cross

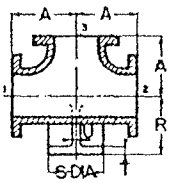

Base Tee

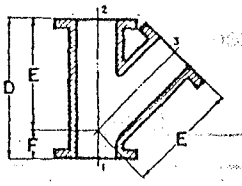

Wye (45° Lateral)

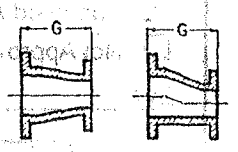

Reducers
Concentric Eccentric

Size	Dimensions in inches										
	A	B	C	D	E	F	G	R	S Dia.	T	U
2 *	4.5	-	2.5	-	-	-	-	-	-	-	-
3	5.5	7.75	3.0	13.0	10.0	3.0	6	4.88	5	.56	.50
4	6.5	9.00	4.0	15.0	12.0	3.0	7	5.50	6	.62	.50
6	8.0	11.50	5.0	18.0	14.5	3.5	9	7.00	7	.69	.62
8	9.0	14.00	5.5	22.0	17.5	4.5	11	8.38	9	.94	.88
10	11.0	16.50	6.5	25.5	20.5	5.0	12	9.75	9	.94	.88
12	12.0	19.00	7.5	30.0	24.5	5.5	14	11.25	11	1.00	1.00
14	14.0	21.50	7.5	33.0	27.0	6.0	16	12.50	11	1.00	1.00
16	15.0	24.00	8.0	36.5	30.0	6.5	18	13.75	11	1.00	1.00
18	16.5	26.50	8.5	39.0	32.0	7.0	19	15.00	13.5	1.12	1.12
20	18.0	29.00	9.5	43.0	35.0	8.0	20	16.00	13.5	1.12	1.12
24	22.0	34.00	11.0	49.5	40.5	9.0	24	18.50	13.5	1.12	1.12

* Not included in AWWA C110.

Maximum Size of Tapped Hole in Fitting Without Adding Boss

Size of Fitting	2-3	4	6	8	10	12	14-24
Max. Tap Size	3/8"	1/2"	3/4"	1"	1¼"	1½"	2"

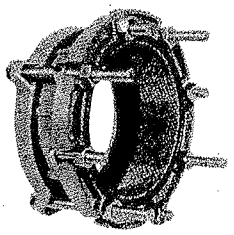

912 flanged coupling adapter cast iron (new-style)

Connect all types of plain end pipe to flanged equipment, meters and fittings sizes 3" thru 12" nominal. Gain flexibility and compactness. Each unit shipped complete with bolts, nuts, and gaskets--ready to install.

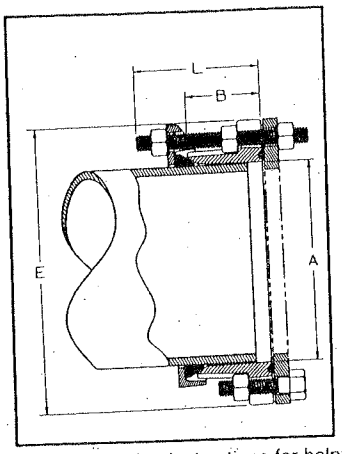

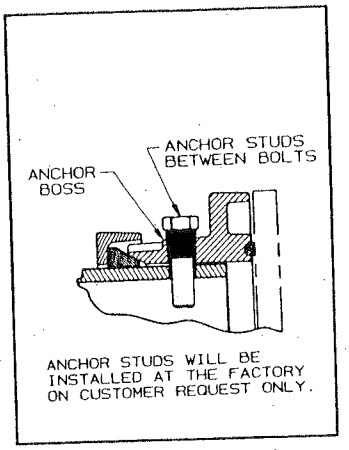

*See installation instructions for helpful ideas on installing anchor studs.

3" thru 12"

Hex Bolts

Bolt Dimensions	Nominal Pipe and Flange Size	Approx. Weight Each Lbs.
5/8" x 3"	3"-4"	1/2
3/4" x 3 1/4"	6"-8"	3/4
7/8" x 3 3/4"	10"-12"	1 1/4

Studs

Bolt Dimensions	Nominal Pipe and Flange Size	Approx. Weight Each Lbs.
5/8"x 7	3"-4"	3/4
3/4" x 8	6"-8"	1 1/8
7/8" x 9	10"-12"	1 3/4

MATERIAL SPECIFICATIONS

BODY: Ductile iron ASTM A536. Bolt circle, bolt size and spacing conform to ANSI 150 lb. flange drilling.
FOLLOWER: Ductile iron ASTM A536.
GASKET: Grade 30—standard—specially compounded rubber of all new materials with ingredients to produce superior storage characteristics, permanence and resistance to set after in-stallation. Recommended for water, salt solutions, mild acids and bases. Temperatures range —40°F to +150°F. Grade 60—optional—compounded to resist—oil, acids, alkalies, most (aliphatic) hydrocarbon fluids, water and many chemicals. Temperatures up to +212°F.
O-RING: Grade 60.
BOLTS AND NUTS: Carbon steel ASTM A307 electro-galvanized with di-chromate seal. Optional 304 stainless.
STUDS: ASTM A193 Grade B7 electro-galvanized with di-chromate seal. Optional 304 stainless.
FINISH: Flexi-Blue™ fusion bonded epoxy.

Material specifications subject to change.

NOM. SIZE INCHES	O.D. RANGE INCHES	CATALOG NUMBER	WEIGHT EACH LBS.	OPTIONAL ANCHOR STUDS		DIMENSIONS/INCHES			
				QTY.	*PSI	A	B	E	L
3	2.85-3.13	912-90031303-000	17	2	175	3 7/8	3	7 3/4	4 9/16
3	3.50	912-90035003-000	17	2	175	3 7/8	3	7 3/4	4 9/16
3	3.80-3.96	912-90039603-000	17	2	175	3 7/8	3	7 3/4	4 9/16
3	3.97-4.14	912-90041403-000	17	2	175	3 7/8	3	7 3/4	4 9/16
4	4.00-4.15	912-90041504-000	22	2	175	5 1/4	3	9 1/32	4 7/8
4	4.22-4.50	912-90045004-000	22	2	175	5 1/4	3	9 1/32	4 7/8
4	4.46-4.86	912-90048604-000	22	2	175	5 1/4	3	9 1/32	4 7/8
4	4.80-5.10	912-90051004-000	22	2	175	5 1/4	3	9 1/32	4 7/8
6	6.00-6.15	912-90061506-000	29	2	125	7 1/4	3 1/2	10 7/8	5 3/4
6	6.28-6.63	912-90066306-000	29	2	175	7 1/4	3 1/2	10 7/8	5 3/4
6	6.56-6.96	912-90069606-000	29	2	175	7 1/4	3 1/2	10 7/8	5 3/4
6	6.90-7.20	912-90072006-000	29	2	175	7 1/4	3 1/2	10 7/8	5 3/4
8	8.00	912-90080008-000	40	2	80	9 13/32	3 1/2	13 3/8	5 7/8
8	8.40-8.63	912-90086308-000	40	2	100	9 13/32	3 1/2	13 3/8	5 7/8
8	8.54-9.11	912-90091108-000	40	2	100	9 13/32	3 1/2	13 3/8	5 7/8
8	9.05-9.40	912-90094008-000	40	2	175	9 13/32	3 1/2	13 3/8	5 7/8
10	10.00	912-90100010-000	60	Not Available		11 5/8	4	15 7/8	6 3/8
10	10.50-10.75	912-90107510-000	60	4	100	11 5/8	4	15 7/8	6 3/8
10	11.10-11.60	912-90116010-000	60	4	120	11 5/8	4	15 7/8	6 3/8
10	11.65-11.88	912-90118810-000	60	Not Available		11 5/8	4	15 7/8	6 3/8
10	11.90-11.95	912-90119510-000	60	Not Available		11 5/8	4	15 7/8	6 3/8
12	12.00	912-90120012-000	80	Not Available		14	4	18 3/4	6 3/8
12	12.50-12.75	912-90127512-000	80	6	100	14	4	18 3/4	6 3/8
12	13.20-13.50	912-90135012-000	80	6	100	14	4	18 3/4	6 3/8
12	13.51-13.75	912-90137512-000	80	Not Available		14	4	18 3/4	6 3/8
12	13.90-14.20	912-90142012-000	80	Not Available		14	4	18 3/4	6 3/8

Suitable anchorage must be provided when excessive pipe movement could occur.
For sizes not listed see 913, 914 Flanged Coupling Adapters.
***Consult Factory**

7

RESILIENT WEDGE VALVE

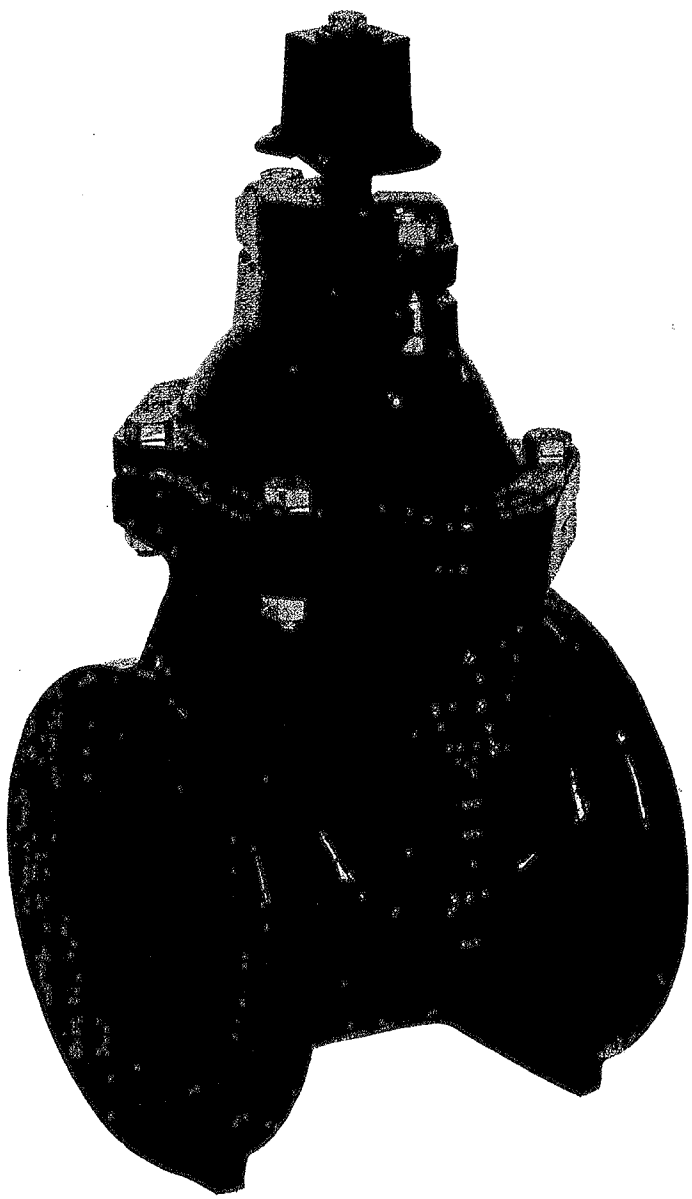

J. P. Wilkerson Contracting Co., Inc.
☐ Approved
☒ Approved As Noted
☐ Not Approved
By M Jones Date 5-15-01

RESILIENT WEDGE VALVE

In 1975 Clow recognized the increased requirements and escalating maintenance cost of water systems in the United States.

Clow responded by introducing the first R / W (Resilient Wedge) Valve in America. This introduction revolutionized the valve market in the U.S.

Clow is the first to introduce and still leads in the Design and Technology of the Bubble-Tight Resilient Seating Valve.

The Clow Valve with its unique features and benefits is the first to be manufactured with *both* AWWA and ULFM Approval for all water system requirements.

RECOMMENDED SPECIFICATIONS FOR RESILIENT WEDGE GATE VALVES

CLOW VALVE COMPANY

Valves shall conform to the latest revision of AWWA Standard C-509 covering resilient seated gate valves and be approved by ULFM.

The valves shall be either non-rising stem or rising stem, opening by turning stem left or right and provided with 2" square operating nut or handwheel with the word Open and an Arrow cast in the metal to indicate direction to open.

The wedge shall be of cast iron completely encapsulated with rubber.

The sealing rubber shall be permanently bonded to the cast iron wedge to meet ASTM tests for rubber metal bond ASTM D429.

Stems for NRS assemblies shall be cast bronze with integral collars in full compliance with AWWA. OS & Y stems shall be bronze. The NRS stem stuffing box shall be the o-ring seal type with two rings located above thrust collar. The two rings shall be replaceable with valve fully open and subjected to full rated working pressure.

There shall be two low torque thrust bearings located above and below the stem collar. The stem nut shall be independent of wedge and shall be made of solid bronze. There shall be a smooth, unobstructed waterway free of all pockets, cavities and depressions in the seat area.

The body and bonnet shall be coated with fusion bonded epoxy both interior and exterior. Each valve shall have maker's name, pressure rating and year in which manufactured cast on the body. Prior to shipment from factory, each valve shall be tested by hydrostatic pressure equal to requirement for both AWWA (twice the specified working pressure) and 400 PSI ULFM requirements.

CLOW ULFM - AWWA R/W VALVE

Features and Benefits

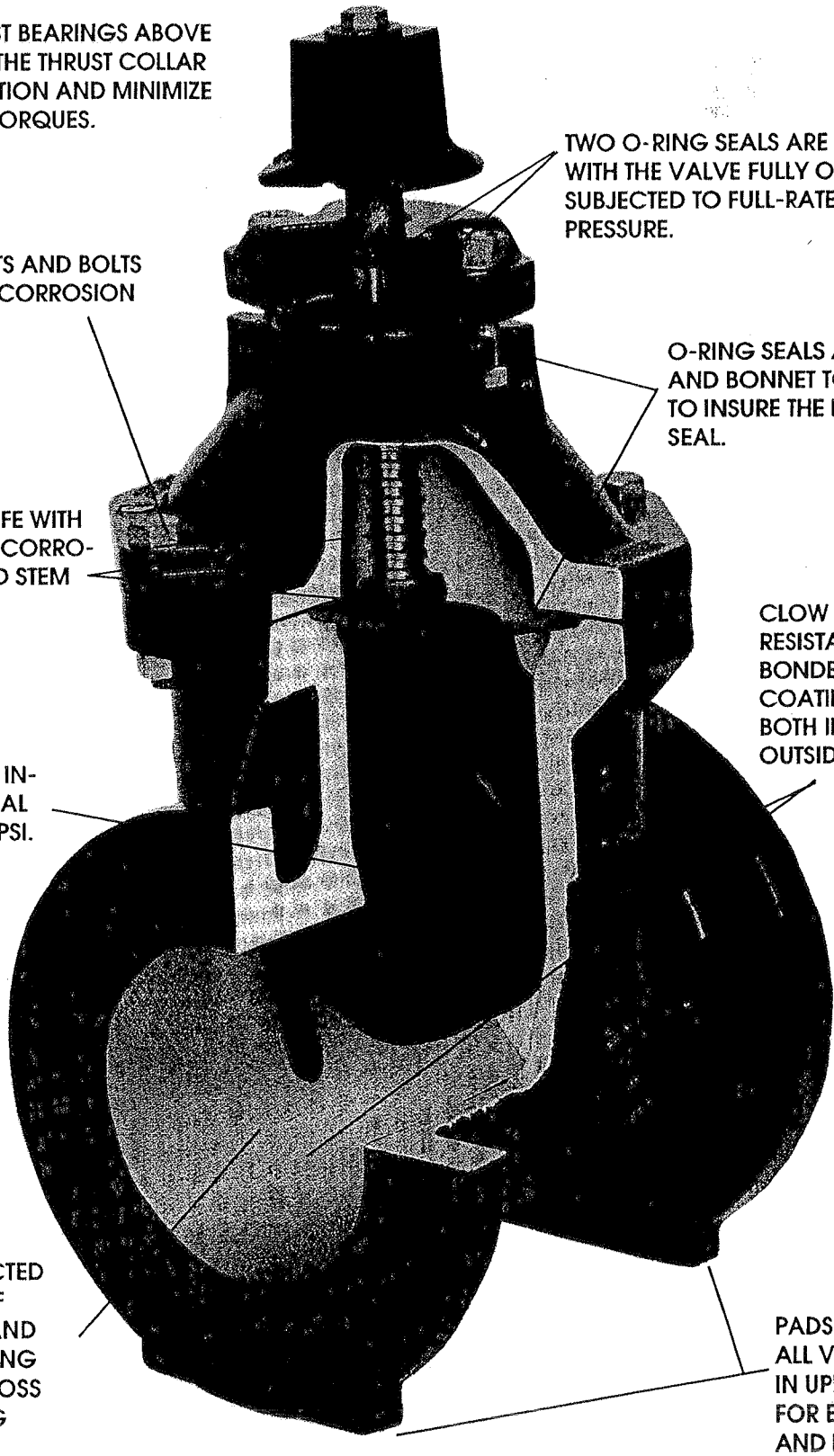

DELRIN THRUST BEARINGS ABOVE AND BELOW THE THRUST COLLAR REDUCE FRICTION AND MINIMIZE OPERATING TORQUES.

TWO O-RING SEALS ARE REPLACEABLE WITH THE VALVE FULLY OPEN AND SUBJECTED TO FULL-RATED WORKING PRESSURE.

ELECTRO-PLATED NUTS AND BOLTS PROVIDE LONG-LIFE CORROSION PROTECTION.

O-RING SEALS AT STUFFING BOX AND BONNET TO BODY FLANGES TO INSURE THE BEST POSSIBLE SEAL.

LONG, TROUBLE FREE LIFE WITH HIGH STRENGTH, NON-CORROSIVE BRONZE STEM AND STEM NUT.

CLOW CORROSION RESISTANT FUSION-BONDED EPOXY COATING PROTECTS BOTH INSIDE AND OUTSIDE OF VALVE.

100% COATED WEDGE INSURES BUBBLE-TIGHT SEAL EVERY TIME UP TO 200 PSI.

SMOOTH, UNOBSTRUCTED WATERWAY IS FREE OF POCKETS, CAVITIES, AND DEPRESSIONS ALLOWING FOR MINIMAL FLOW LOSS AND LOWER PUMPING COSTS.
ALL VALVES ACCEPT FULL SIZE TAPPING CUTTER.

PADS ON THE BOTTOM OF ALL VALVES KEEP VALVE IN UPRIGHT POSITION FOR EASIER STORAGE AND PROTECTION FROM THE ELEMENTS

ALL VALVES ARE RATED AT 250 PSI FOR AWWA SERVICE AND 200 PSI FOR ULFM SERVICE. ALL VALVES ARE HYDROSTATICALLY TESTED TO 500 PSI.

AVAILABLE END CONNECTIONS & DIMENSIONS FOR CLOW RESILENT WEDGE VALVE

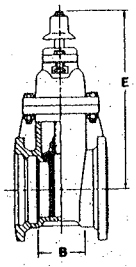

F-6100
MECHANICAL JOINT
2" • 24"

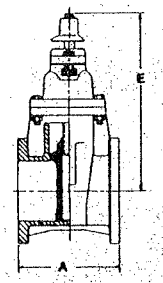

F-6102
FLANGED
2" • 24"

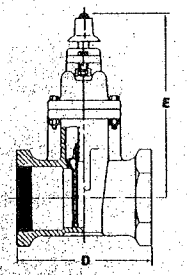

F-6103
THREADED ENDS
2" • 3"

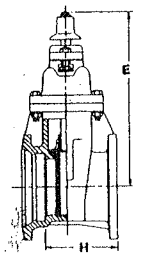

F-6106
FLGD. & MECH. JT.
3" • 24"

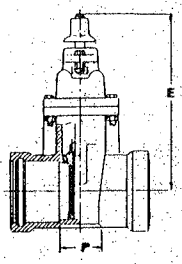

F-6110
PUSH ON FOR
SDR PVC
2" • 8"

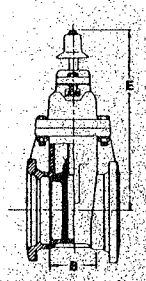

F-6111
MECHANICAL
CUTTING IN JOINT
4" • 12"

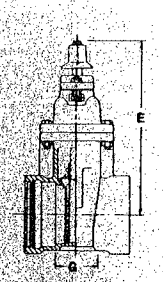

F-6112
PUSH ON ENDS
FOR DUCTILE IRON
AND C900 PVC PIPE
4" • 12" & 16"

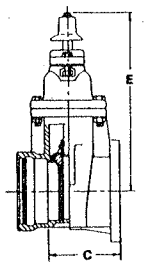

F-6113
FLANGED & PUSH-ON
4" • 12"

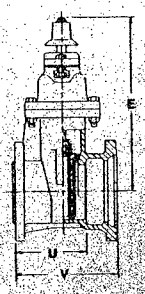

F-6114
MECH. JT. FOR TAPPING
4" • 24"

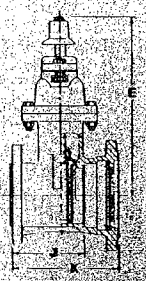

F-6115
PUSH ON FOR TAPPING
4" • 8"

F-6120
MECHANICAL JOINT
INDICATOR POST VALVE
2" • 12"

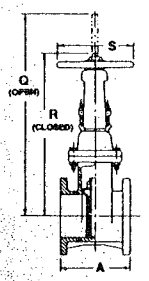

F-6136
FLGD. OS & Y CONSTRUCTION
2-1/2" • 24"

	A	B	C	D	E	G	H	J	K	P	Q	R	S	U	V	No. of Turns to Full Open
2"	7	3-1/4	—	5-1/4	10-7/8	—	—	—	—	3	—	—	7-1/4	—	—	4-3/4
2-1/2"	7-1/2	—	—	7	11-3/8	—	—	—	—	3-1/4	16-3/8	13-7/8	7-1/4	—	—	5-1/2
3"	8	3-1/2	—	7-1/8	12-3/8	—	5-3/4	—	—	3-1/2	18-7/8	15-5/8	10	—	—	10
4"	9	4-1/2	6-3/4	—	14-3/4	4-1/2	6-3/4	6-3/4	10-3/8	4-1/2	22-3/4	18-1/4	10	6-3/4	9-3/4	13-1/2
6"	10-1/2	5	7-7/8	—	19	5-1/4	7-3/4	8-1/4	12	5	30-1/8	23-3/4	12	7-3/4	11-1/4	19-1/2
8"	11-1/2	5-1/2	8-1/2	—	22-1/2	5-5/8	8-1/2	8-1/2	12-3/4	5-1/2	37-3/4	29-1/4	14	8-1/2	11-3/4	25-1/2
10"	13	7	10	—	26-1/2	7	10	—	—	—	45-3/4	35-3/8	18	10	13-1/2	31-1/2
12"	14	8	11-1/4	—	30	8-1/2	11	—	—	—	53-1/8	40-3/8	18	11	14-3/4	37-3/4
14"	15	10	—	—	37-1/2	—	13-1/2	—	—	—	74-3/4	59-3/4	22	13-1/4	16-3/4	52
16"	16	10	—	—	37-1/2	10-1/2	13	—	—	—	74-3/4	59-3/4	22	12-3/4	16-1/4	52
18	17	11-3/4	—	—	45-1/4	—	14-7/8	—	—	—	89-5/8	70-5/8	26	14-5/8	18-1/8	64
20	18	11	—	—	45-1/4	—	14-1/2	—	—	—	89-5/8	70-5/8	26	14-1/2	18	64
24	20	12	—	—	50	—	17	—	—	—	104-3/8	79-3/8	30	17	20-1/2	76

CLOW VALVE CO.
1375 Magnolia Avenue
Corona, California 91719
Phone 714-735-5555
FAX 714-735-0837

CLOW
VALVE COMPANY
A Division of McWane, Incorporated

CLOW VALVE CO.
902 South 2nd Street
Oskaloosa, Iowa 52577
Phone 515-673-8611
FAX 515-673-8269

Crispin Crispin Crisp

MIDGET AIR VALVES

STAINLESS STEEL TRIM STANDARD

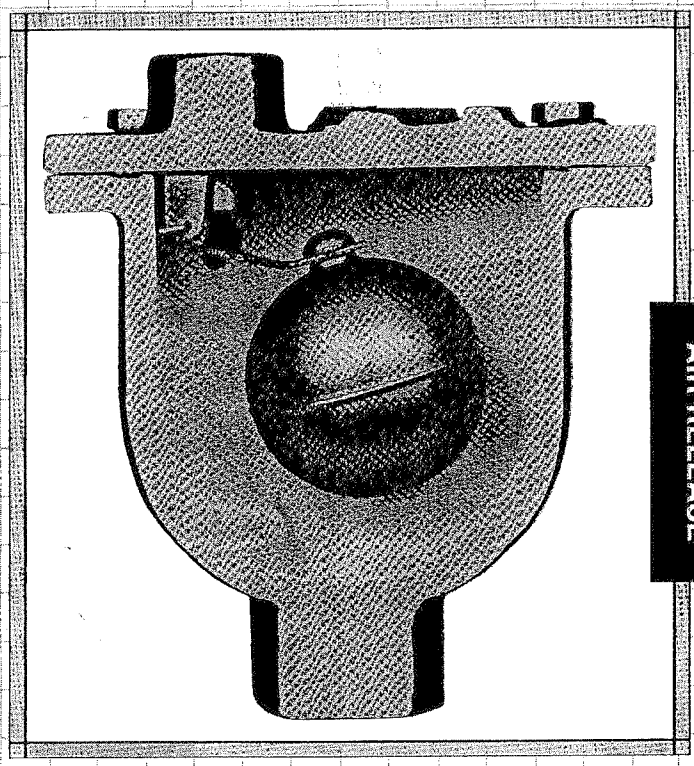

PRESSURE AIR RELEASE

ORIFICE SIZING INFORMATION

ORIFICE DIA.	MAX. WORKING PRESSURE
1/8″	50 LBS.
3/32″	85 LBS.
1/16″	150 LBS.
3/64″	200 LBS.
1/32″	300 LBS.

PARTS LIST

PART NO.	ITEM	MATERIAL	QTY. PER UNIT
1	VALVE SEAT	STAINLESS STEEL	1
2	PLUNGER BUTTON	BUNA-N	1
4	VALVE LEVER	STAINLESS STEEL	1
5	SCREW (DRIVE)	STAINLESS STEEL	1
6	BALL FLOAT	STAINLESS STEEL	1
7	HINGE PIN	STAINLESS STEEL	1
7A	PIN CLIP	STAINLESS STEEL	1
8	HINGE BUTT	STAINLESS STEEL	1
9	BOLT	STEEL	6
10	SCREW	STAINLESS STEEL	1
11	FLANGE	CAST IRON	1
12	BODY	CAST IRON	1
13	FLANGE GASKET	ARMSTRONG	1
*14N	NIPPLE	STEEL	1
*14V	VACUUM CHECK VALVE	BRASS	1

*Part No's. 14N & 14V Are Optional At Customer's Request.
Approximate Weight — 6 Lbs.

NOTE: MATERIALS AND PRICES SUBJECT TO CHANGE WITHOUT NOTICE.

Crispin Midget Air Valves are chosen for use in venting trapped air in hot water systems by being installed at the high points of the line, thereby resulting in an increase of the B.T.U. output. The Crispin Midget Air Valve is equally well designed for venting cold water, petroleum products and many other liquids of varying specific gravities. The Midget is also ideal for automatic priming of vacuum primed pumps. A vacuum check is available if desired for attachment to the valve outlet to prevent air from re-entering the system.

All Crispin valves are designed for a cold water working pressure of 300 PSIG.

MODEL INFORMATION

Size of Valve	3/8″	1/2″	3/4″	1″
Model No.	M3	M5	M8	M10
NPT-OUTLET	3/8″	3/8″	3/8″	3/8″
Height	5-9/16″	5-9/16″	5-9/16″	5-9/16″
Width	5″	5″	5″	5″
Weight	6 lbs.	7 lbs.	7 lbs.	8 lbs.

MULTIPLEX Manufacturing Co.
600 Fowler Ave., P.O. Box 427, BERWICK, PA 18603 / 800-247-8258 / 717-752-4524 / (FAX) 717-752-4962

Rev. 4/89

Crispin

PRESSURE AIR RELEASE VALVES

Pressure air release valves allow air and/or gas to be continuously and automatically released from a pressurized liquid system. If air or gas pockets collect at the high points in a pumped system, then those pressurized air pockets can begin to displace usable pipe cross section. As the cross section of the pipe artificially decreases, the pump sees this situation as increased resistance to its ability to force the liquid through the pipe. An increase in resistance to flow tells the pump to work harder and, subsequently, more energy is expended. However, an even worse situation can be created if the pump were selected with system operating conditions near pump shut-off. In this case, an increase in total dynamic head can cause the pump to go into the pump shut-off condition and cease functioning.

CRISPIN Pressure Air Release Valves operate by means of a compound lever system. This lever system multiplies the weight of the float so that the force pulling the rubber valve away from the orifice is greater than the force or system pressure holding it closed. The pressure at which it will operate is determined by the orifice size. The orifice size will vary inversely to the pressure, that is, as the operating pressure increases the orifice must be smaller, as the operating pressure decreases the orifice can be larger. A valve with an orifice size small enough to permit operation at 300 psig will still function at pressures less than 300 psig.

The various orifice sizes available for each pressure valve will provide varying volumes of exhaust air.

Pressure air release valves are normally applied on piping systems transporting liquids with low solid content. Sewer pressure air release valves are used otherwise.

The valves are located at the pump discharge along with air and vacuum valves and/or along the system at high points or long runs. Suggested locations for the various valves along the pipeline can be found in the catalog.

In some instances, the water in the piping system may be saturated with air or the flow may be extremely turbulent creating a white water condition. Consequently, effective air release may be very difficult to achieve with an air release valve simply mounted on the pipe. A stilling well may be required to slow down the water flow to provide time for the entrained air to be released. A large section of pipe, or similar device, strategically placed, would decrease the line velocity at that point and thereby provide additional time for the entrained air to be released from solution and collect at the high point in order to be discharged.

Where pressure air release valves are used on systems other than water, the specific gravity of the liquid must be considered. (re. catalog sheet - "Air Release Valves For Liquids Other Than Water"). The specific gravity affects the float buoyancy and, subsequently, valve performance.

For example, a valve applied on a petroleum application would require a float of lighter weight in order to provide a buoyancy equivalent to of the float in water.

The standard valve is supplied with a P.V.C. seat and Buna-N valve. A stainless steel seat is provided as an option with a Buna-N valve for special applications. Caution should be exercised if the valve is to be used in an environment where the standard materials would not be suitable.

The internal linkage of the pressure valves, like the pressure sewer valves, is securely bolted to the top flange at two separate points. This design distributes any incurred linkage stresses evenly over the surface of the flange.

TABLE 1
Discharge Capacity in SCFM

Operating Pressure psig	Orifice Size In Inches								
	1/32	3/64	1/16	5/64	3/32	7/64	1/8	9/64	5/32
50	.6	1.3	2.4	3.7	5.3	7.3	9.6	12.1	14.9
100	1.1	2.4	4.2	6.6	9.5	12.9	16.9	21.3	26.3
150	1.5	3.4	6.1	9.6	13.8	18.6	24.4	30.8	37.9
200	2	4.5	8.1	12.4	17.9	24.4	31.9	40.3	49.5
250	2.5	5.5	9.9	15.3	22.1	30.0	39.2	49.5	61.1
300	3.2	7.1	11.8	18.4	26.4	35.8	46.7	58.9	73.

Operating Pressure psig	Orifice Size In Inches								
	3/16	1/4	5/16	3/8	7/16	1/2	5/8	3/4	1
50	21.4	38.1	59	86	117	153	237	343	610
100	37.7	68	105	152	205	270	422	607	1080
150	54.6	98	152	220	298	390	592	855	1520
200	72	127	198	287	390	510	796	1147	2038
250	88	157	244	352	480	627	980	1410	2506
300	105	187	290	420	572	746	1167	1679	2985

MULTIPLEX Manufacturing Co.
600 Fowler Ave., P.O. Box 427, BERWICK, PA 18603 / 800-247-8258 / 717-752-4524 / (FAX) 717-752-4962

CHECK VALVES

SWING

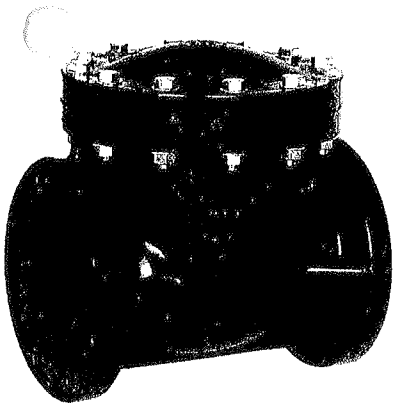

FEATURES

- Minimum resistance to flow
- May be installed in horizontal or vertical lines
- Disc seats tightly with minimum back pressure
- Top entry valve facilitates cleaning without removal from line
- EPDM seat and seal
- All sizes rated for full vacuum service

OPTIONS

- External lever and weight to assist disc in closing faster
- External spring to assist disc in closing faster
- Teflon® or Viton® seat and seals

PECIFICATIONS

IZES: 3/4"–8"
IODELS: Flanged
ODIES: PVC, PP, PVDF

SAMPLE SPECIFICATION

All swing check valves shall be of a solid thermoplastic construction having no metal to media contact. Valves must incorporate a single disc design suitable for either horizontal or vertical installations, as manufactured by Asahi/America, Inc.

v VALUES

Size (inches)	Cv
3/4	14
1	24
1 1/2	81
2	140
[illegible]	250
[illegible]	280
4	510
5	750
6	1100
8	1900

MINIMUM BACK PRESSURE REQUIRED TO CLOSE VALVE (PSI)

Seat	3/4	1	1 1/2	2	2 1/2	3	4	6	8
EPDM	2.8	5.0	5.0	5.0	5.0	5.7	5.7	6.4	6.4
Teflon	5.0	8.5	8.5	8.5	8.5	8.5	9.2	10.0	10.0

J. F. Wilkerson Contracting Co., Inc.
☐ Approved
☒ Approved As Noted
☐ Not Approved
By M Jones Date 5-15-01

RESSURE VS TEMPERATURE (PSI, WATER, NON-SHOCK)

Size (inches)	PVC Elastomer 30° F 120° F	PVC Teflon® 30° F 120° F	PP Elastomer -5° F 140° F	PP Elastomer 141° F 175° F	PP Teflon® -5° F 140° F	PP Teflon® 141° F 175° F	PVDF Teflon® -30° F 140° F	PVDF Teflon® 141° F 175° F	PVDF Teflon® 176° F 212° F
3/4	100	85	100	85	90	75	90	75	60
1	100	85	100	85	90	75	90	75	60
1 1/2	100	85	100	85	90	75	90	75	60
2	100	85	100	85	90	75	90	75	60
2 1/2	100	85	100	85	90	75	90	75	60
3	100	75	100	85	75	60	75	60	45
4	75	75	75	60	75	60	75	60	45
5	75	60	75	60	60	45	60	45	40
6	75	45	75	60	45	30	45	40	30
8	45	45	45	30	45	30	45	40	30

P.O. Box 653 • 35 Green Street, Malden, MA 02148 • Tel: (800) 343-3618, (781) 321-5409
Fax: (800) 426-7058 • Internet: http://www.asahi-america.com • Email: asahi@asahi-america.com

EPG VSD 17-5 SurePump

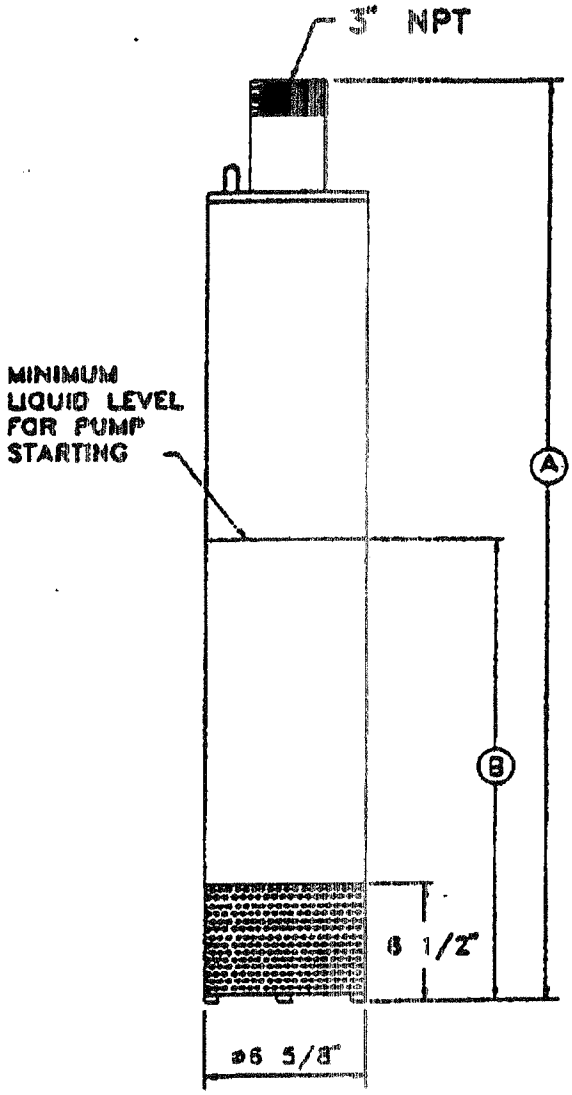

Pump Model	Motor Hp	Dimension A	Dimension B	Shipping Wgt.
VSD 17-5	7.5	58"	32.25"	118.5 lbs

1202

SERIES 17 SurePump™

Flow Range 20-120 GPM

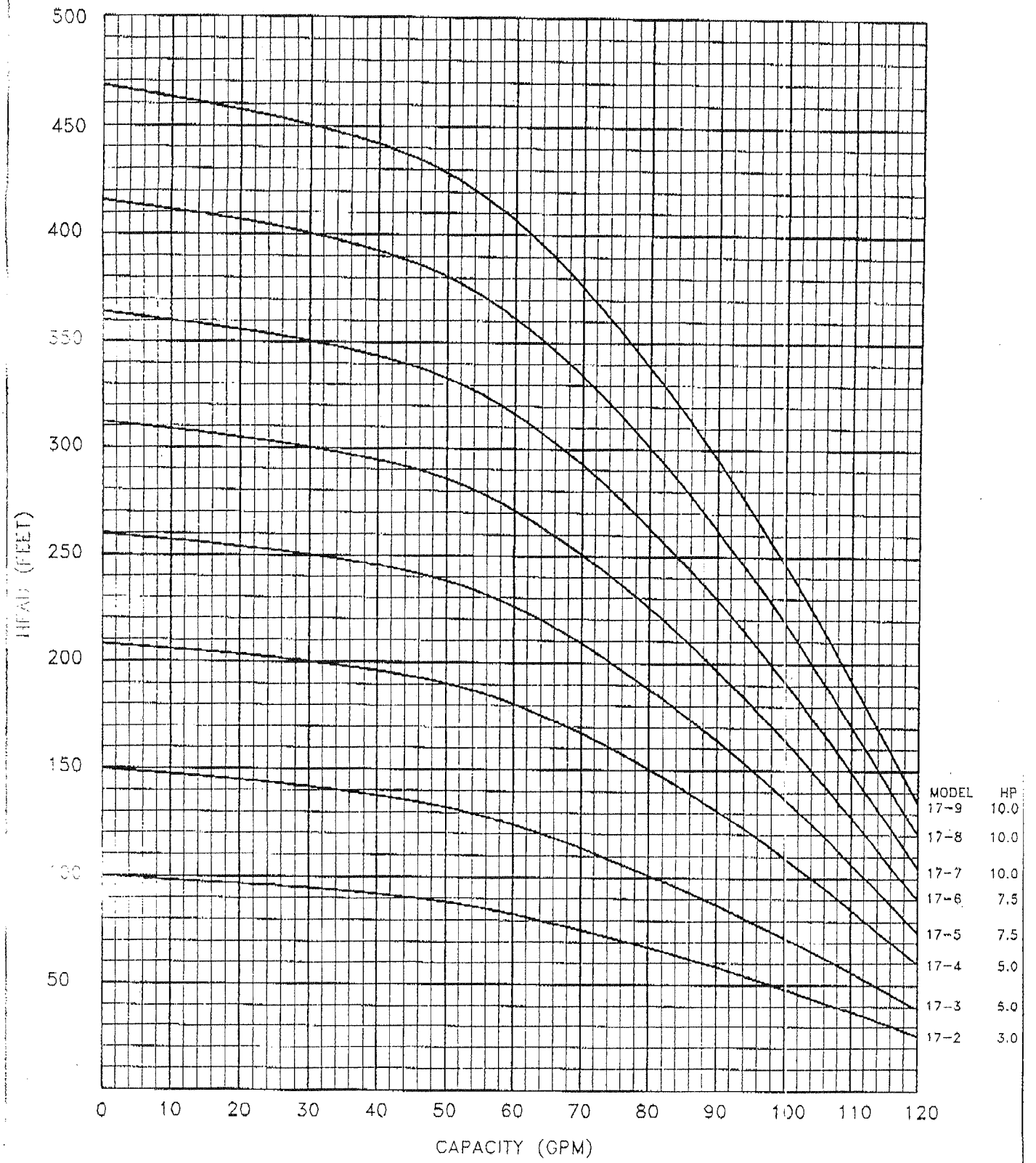

SPECIFICATIONS SUBJECT TO CHANGE WITHOUT NOTICE

Appendix C

Leachate Recirculation Monthly Reporting Forms

JOHNSTON COUNTY MSW LANDFILL - PHASE 5
LEACHATE RECIRCULATION
LEACHATE RECIRCULATION MONTHLY REPORTING FORM

January-02

Day	Rain (Inch)	Max. Temp.	Leachate Generated	Leachate Recirculated	Injection Galleries Used	Problems / Weather (Use Extra Sheet if Required)
1	0.00	39.50				
2	0.00	32.80				
3	0.00	28.70				
4	0.22	38.70				
5	0.00	46.00				
6	1.11	43.40				
7	0.00	42.70		6448	7	
8	0.00	41.90		6253	6	
9	0.00	54.00		6005	1	
10	0.00	65.80		6167	2	
11	0.00	60.20		6210	3	
12	0.09	50.40				
13	0.22	51.90				
14	0.00	53.30		6426	4	
15	0.00	60.10		6210	5	
16	0.00	48.40		6534	6	
17	0.00	61.40		3132	7	
18	0.00	53.30		6026	7	
19	0.50	41.60				
20	0.87	46.60				
21	0.24	49.10		6340	1	
22	0.01	58.60		6199	2	
23	1.21	54.70		6113	3	
24	0.18	66.10		6383	4	
25	0.35	57.10		5940	5	
26	0.01	62.10				
27	0.00	66.30				
28	0.00	74.70		6232	1	
29	0.00	76.50		6059	2	
30	0.00	79.20				
31	0.00	75.70				

Total Rain	Avg. Max. Temp.	Total Leachate Generated	Total Leachate Recirculated
5.01	54.22	0	102,677

Weather information was provided by State Climate Office of North Carolina at NC State University

JOHNSTON COUNTY MSW LANDFILL - PHASE 5
LEACHATE RECIRCULATION
LEACHATE RECIRCULATION MONTHLY REPORTING FORM

February-02

Day	Rain (Inch)	Max. Temp.	Leachate Generated	Leachate Recirculated	Injection Galleries Used	Problems / Weather (Use Extra Sheet if Required)
1	0.00	79.80		6253	4	
2	0.00	53.40				
3	0.00	45.80				
4	0.00	49.00		6242	5	
5	0.00	42.50		6145	1	
6	0.19	46.80		5875	2	
7	0.76	44.70		6415	4	
8	0.20	61.30		4568	5	
9	0.05	63.40				
10	0.02	64.20				
11	0.02	56.70		6264	1	
12	0.01	60.10		5972	2	
13	0.00	55.70		6242	4	
14	0.00	52.00		6588	1	
15	0.00	61.00		6080	2	
16	0.00	63.80				
17	0.00	51.20				
18	0.00	51.60		5940	4	
19	0.00	62.00				
20	0.01	69.40		6436	1	
21	0.00	68.30		5983	2	
22	0.00	59.50		6156	4	
23	0.00	46.70				
24	0.00	57.00				
25	0.00	63.40		6124	1	
26	0.00	71.80		6188	2	
27	0.00	58.20		6977	4	
28	0.00	43.10		6502	2	

Total Rain	Avg. Max. Temp.	Total Leachate Generated	Total Leachate Recirculated
1.26	57.23	0	116,950

Weather information was provided by State Climate Office of North Carolina at NC State University

JOHNSTON COUNTY MSW LANDFILL - PHASE 5
LEACHATE RECIRCULATION
LEACHATE RECIRCULATION MONTHLY REPORTING FORM

March-02

Day	Rain (Inch)	Max. Temp.	Leachate Generated	Leachate Recirculated	Injection Galleries Used	Problems / Weather (Use Extra Sheet if Required)
1	0.00	52.20		6447	2	
2	0.11	64.80				
3	0.63	64.80				
4	0.01	47.70		5854	4	
5	0.02	48.90		6717	1	
6	0.00	59.90		6296	2	
7	0.00	68.50		6264	4	
8	0.00	71.90		6102	1	
9	0.02	77.50				
10	0.00	65.10				
11	0.00	57.70		6739	2	
12	0.00	59.50		6070	4	
13	0.01	58.50		3218	1	
14	0.00	69.10				
15	0.00	77.20				
16	0.00	83.30				
17	0.04	65.60				
18	0.01	56.10				
19	0.00	55.70				
20	0.02	75.00				
21	0.41	58.30				
22	0.07	49.70				
23	0.02	56.60				
24	0.00	70.10				
25	0.00	78.80				
26	0.08	80.00				
27	0.01	64.30				
28	0.00	59.50				
29	0.01	75.30				
30	0.00	73.90				
31	0.01	62.70				

Total Rain	Avg. Max. Temp.	Total Leachate Generated	Total Leachate Recirculated
1.48	64.78	0	53,707

Weather information was provided by State Climate Office of North Carolina at NC State University

JOHNSTON COUNTY MSW LANDFILL - PHASE 5
LEACHATE RECIRCULATION
LEACHATE RECIRCULATION MONTHLY REPORTING FORM

April-02

Day	Rain (Inch)	Max. Temp.	Leachate Generated	Leachate Recirculated	Injection Galleries Used	Problems / Weather (Use Extra Sheet if Required)
1	0.00	67.40				
2	0.00	76.10				
3	0.01	82.90				
4	0.06	57.90				
5	0.19	58.60				
6	0.01	54.20				
7	0.00	58.50				
8	0.00	75.30				
9	0.00	80.10				
10	0.12	66.80				
11	0.00	71.60				
12	0.01	76.80				
13	0.00	78.00				
14	0.00	79.40				
15	0.00	85.10		5842	2	
16	0.00	88.90		6102	3	
17	0.00	92.40		5896	4	
18	0.07	92.10		2959	1	
19	0.02	89.40		4082	2	
20	0.00	88.80				
21	0.00	88.90				
22	0.00	80.60		4482	4	
23	0.00	68.60		4374	5	
24	0.00	70.10		4806	6	
25	0.00	79.40		5983	7	
26	0.00	66.20				
27	0.02	73.30				
28	0.02	85.00				
29	0.00	79.60		4082	1	
30	0.00	74.40				

Total Rain	Avg. Max. Temp.	Total Leachate Generated	Total Leachate Recirculated
0.53	76.21	0	48,608

Weather information was provided by State Climate Office of North Carolina at NC State University

JOHNSTON COUNTY MSW LANDFILL - PHASE 5
LEACHATE RECIRCULATION
LEACHATE RECIRCULATION MONTHLY REPORTING FORM

May-02

Day	Rain (Inch)	Max. Temp.	Leachate Generated	Leachate Recirculated	Injection Galleries Used	Problems / Weather (Use Extra Sheet if Required)
1	0.00	84.20		4233	4	
2	0.00	87.40		4255	5	
3	0.00	70.90		3143	6	
4	0.17	55.80				
5	0.21	68.10				
6	0.00	77.40		2462	1	
7	0.00	86.00		3877	2	
8	0.00	87.00				
9	0.00	91.50				
10	0.00	87.90				
11	0.01	73.50				
12	0.00	87.30				
13	0.47	88.60				
14	0.00	69.20				
15	0.00	74.70				
16	0.00	81.70				
17	0.00	85.50				
18	0.26	74.20				
19	0.00	61.80				
20	0.00	66.50				
21	0.00	62.40				
22	0.00	67.70				
23	0.00	76.00				
24	0.00	87.50		5000	1	
25	0.00	90.30				
26	0.00	86.90				
27	0.00	85.60		3974	2	
28	0.00	85.20		4633	4	
29	0.04	83.80		4579	5	
30	0.00	85.90		4298	1	
31	0.00	89.50		3067	2	

Total Rain	Avg. Max. Temp.	Total Leachate Generated	Total Leachate Recirculated
1.16	79.35	0	43,521

Weather information was provided by State Climate Office of North Carolina at NC State University

JOHNSTON COUNTY MSW LANDFILL - PHASE 5
LEACHATE RECIRCULATION
LEACHATE RECIRCULATION MONTHLY REPORTING FORM

June-02

Day	Rain (Inch)	Max. Temp.	Leachate Generated	Leachate Recirculated	Injection Galleries Used	Problems / Weather (Use Extra Sheet if Required)
1	0.07	95.90				
2	0.00	95.30				
3	0.00	88.10		4147	4	
4	0.00	93.20		4342	5	
5	0.00	94.90		3153	6	
6	0.01	94.90		4514	1	
7	0.00	80.50		4287	2	
8	0.00	77.60				
9	0.00	85.40				
10	0.00	90.80		3952	3	
11	0.00	92.80		3520	4	
12	0.00	95.60		4136	5	
13	0.00	97.80		3920	1	
14	0.15	90.00		2872	2	
15	0.00	87.50				
16	0.00	89.70				
17	0.00	86.80				
18	0.00	85.70				
19	0.00	86.20				
20	0.00	84.90				
21	0.00	85.80				
22	0.00	84.60				
23	0.00	91.20				
24	0.00	94.50		4201	6	
25	0.00	92.80		4622	7	
26	0.10	89.30		3704	5	
27	0.36	88.50		4352	7	
28	0.34	86.90		3456	5	
29	0.00	89.70				
30	0.00	90.70				

Total Rain	Avg. Max. Temp.	Total Leachate Generated	Total Leachate Recirculated
1.03	89.59	0	59,178

Weather information was provided by State Climate Office of North Carolina at NC State University

JOHNSTON COUNTY MSW LANDFILL - PHASE 5
LEACHATE RECIRCULATION
LEACHATE RECIRCULATION MONTHLY REPORTING FORM

July-02

Day	Rain (Inch)	Max. Temp.	Leachate Generated	Leachate Recirculated	Injection Galleries Used	Problems / Weather (Use Extra Sheet if Required)
1	0.00	92.40				
2	0.03	92.20		3488	7	
3	0.00	95.20				
4	0.01	97.40				
5	0.80	99.70				
6	0.00	88.30				
7	0.00	88.90				
8	0.00	89.00				
9	0.00	93.40				
10	0.64	95.20				
11	0.22	74.50				
12	0.00	76.80				
13	0.00	84.50				
14	1.50	85.90				
15	0.00	86.30				
16	0.00	93.70				
17	0.00	93.50				
18	0.25	94.60				
19	0.00	93.50				
20	0.01	89.70				
21	0.00	88.00				
22	0.00	90.80				
23	0.02	85.70				
24	1.94	89.40				
25	1.39	82.40				
26	0.13	88.60				
27	0.01	91.30				
28	0.00	94.00				
29	0.00	96.00				
30	0.00	96.50				
31	0.00	92.70				

Total Rain	Avg. Max. Temp.	Total Leachate Generated	Total Leachate Recirculated
6.95	90.33	0	3,488

Weather information was provided by State Climate Office of North Carolina at NC State University

JOHNSTON COUNTY MSW LANDFILL - PHASE 5
LEACHATE RECIRCULATION
LEACHATE RECIRCULATION MONTHLY REPORTING FORM

August-02

Day	Rain (Inch)	Max. Temp.	Leachate Generated	Leachate Recirculated	Injection Galleries Used	Problems / Weather (Use Extra Sheet if Required)
1	0.00	93.30				
2	0.00	92.20				
3	0.00	91.00				
4	0.00	90.40				
5	0.00	92.00				
6	0.00	88.70				
7	0.00	82.00				
8	0.00	83.90				
9	0.00	84.90				
10	0.00	87.10				
11	0.00	93.10				
12	0.00	96.60				
13	0.00	96.90				
14	0.08	90.80				
15	0.21	90.00				
16	0.01	89.30				
17	0.04	91.50				
18	0.38	94.90				
19	0.75	95.90				
20	0.00	93.80				
21	0.00	89.70				
22	0.00	91.90				
23	0.00	99.80				
24	0.05	100.00				
25	0.01	92.90				
26	0.98	77.30				
27	0.89	76.30				
28	0.21	73.30				
29	0.01	72.00				
30	0.91	69.70				
31	1.26	69.70				

Total Rain	Avg. Max. Temp.	Total Leachate Generated	Total Leachate Recirculated
5.79	88.09	0	0

Weather information was provided by State Climate Office of North Carolina at NC State University

JOHNSTON COUNTY MSW LANDFILL - PHASE 5
LEACHATE RECIRCULATION
LEACHATE RECIRCULATION MONTHLY REPORTING FORM

September-02

Day	Rain (Inch)	Max. Temp.	Leachate Generated	Leachate Recirculated	Injection Galleries Used	Problems / Weather (Use Extra Sheet if Required)
1	0.14	77.00				
2	0.00	78.20				
3	0.00	86.50				
4	0.00	91.50				
5	0.00	85.70				
6	0.00	83.40				
7	0.00	81.00				
8	0.00	81.20				
9	0.00	83.20				
10	0.00	86.10				
11	0.00	89.70				
12	0.00	79.10				
13	0.00	82.40				
14	0.47	79.10				
15	0.50	82.30				
16	0.83	82.80				
17	0.00	84.60				
18	0.00	81.20				
19	0.00	81.90				
20	0.00	83.30				
21	0.00	85.80				
22	0.00	87.00				
23	0.00	78.70				
24	0.00	78.50				
25	0.00	76.20				
26	0.28	77.30				
27	0.03	86.50				
28	0.05	77.30				
29	0.00	79.10				
30	0.00	79.20				

Total Rain	Avg. Max. Temp.	Total Leachate Generated	Total Leachate Recirculated
2.30	82.19	0	0

Weather information was provided by State Climate Office of North Carolina at NC State University

JOHNSTON COUNTY MSW LANDFILL - PHASE 5
LEACHATE RECIRCULATION
LEACHATE RECIRCULATION MONTHLY REPORTING FORM

October-02

Day	Rain (Inch)	Max. Temp.	Leachate Generated	Leachate Recirculated	Injection Galleries Used	Problems / Weather (Use Extra Sheet if Required)
1	0.00	83.70				
2	0.00	87.70				
3	0.00	89.90				
4	0.00	87.60				
5	0.00	89.50				
6	0.00	80.00				
7	0.00	83.80				
8	0.00	66.40				
9	0.00	74.10				
10	0.23	71.90				
11	3.28	71.90				
12	0.00	77.00				
13	0.01	74.90				
14	0.00	66.70				
15	0.30	59.10				
16	0.08	61.40				
17	0.00	67.70				
18	0.00	64.20				
19	0.00	71.10				
20	0.00	73.70				
21	0.94	64.20				
22	0.20	59.70				
23	0.00	71.00				
24	0.01	59.50				
25	0.01	59.90				
26	0.12	67.40				
27	0.00	66.10				
28	0.32	65.80				
29	0.36	51.60				
30	0.13	48.60				
31	0.00	55.10				

Total Rain	Avg. Max. Temp.	Total Leachate Generated	Total Leachate Recirculated
5.99	70.04	0	0

Weather information was provided by State Climate Office of North Carolina at NC State University

JOHNSTON COUNTY MSW LANDFILL - PHASE 5
LEACHATE RECIRCULATION
LEACHATE RECIRCULATION MONTHLY REPORTING FORM

November-02

Day	Rain (Inch)	Max. Temp.	Leachate Generated	Leachate Recirculated	Injection Galleries Used	Problems / Weather (Use Extra Sheet if Required)
1	0.00	56.90				
2	0.00	57.20				
3	0.00	58.00				
4	0.10	61.40				
5	0.33	55.10				
6	0.51	61.00				
7	0.00	55.80				
8	0.00	64.30				
9	0.00	72.00				
10	0.00	77.30				
11	0.08	73.80				
12	1.19	67.20				
13	0.30	55.70				
14	0.00	60.70				
15	0.00	64.90				
16	0.33	62.00				
17	0.44	52.90				
18	0.00	52.20				
19	0.00	61.20				
20	0.00	60.90				
21	0.00	58.20				
22	0.00	57.10				
23	0.00	53.00				
24	0.00	64.50				
25	0.00	66.90				
26	0.00	57.60				
27	0.00	48.60				
28	0.00	43.00				
29	0.00	52.20				
30	0.00	61.70				

Total Rain	Avg. Max. Temp.	Total Leachate Generated	Total Leachate Recirculated
3.28	59.78	0	0

Weather information was provided by State Climate Office of North Carolina at NC State University

JOHNSTON COUNTY MSW LANDFILL - PHASE 5
LEACHATE RECIRCULATION
LEACHATE RECIRCULATION MONTHLY REPORTING FORM

December-02

Day	Rain (Inch)	Max. Temp.	Leachate Generated	Leachate Recirculated	Injection Galleries Used	Problems / Weather (Use Extra Sheet if Required)
1	0.00	43.30				
2	0.00	50.10				
3	0.00	50.50				
4	0.07	31.80				
5	1.02	32.20				
6	0.35	39.00				
7	0.00	45.70				
8	0.00	52.40				
9	0.00	43.70				
10	0.01	39.60				
11	0.32	40.80				
12	0.00	56.10				
13	0.78	44.90				
14	0.00	51.50				
15	0.00	54.00				
16	0.00	60.10				
17	0.00	45.40				
18	0.00	49.40				
19	0.05	59.60				
20	0.52	65.40				
21	0.00	55.50				
22	0.00	62.50				
23	0.00	57.20				
24	0.59	45.70				
25	0.08	46.40				
26	0.00	44.70				
27	0.00	46.60				
28	0.00	49.50				
29	0.00	61.50				
30	0.00	61.60				
31						

Total Rain	Avg. Max. Temp.	Total Leachate Generated	Total Leachate Recirculated
3.79	49.56	0	0

Weather information was provided by State Climate Office of North Carolina at NC State University

JOHNSTON COUNTY MSW LANDFILL - PHASE 5
LEACHATE RECIRCULATION
LEACHATE RECIRCULATION MONTHLY REPORTING FORM

January-03

Day	Rain (Inch)	Max. Temp.	Leachate Generated	Leachate Recirculated	Injection Galleries Used	Problems / Weather (Use Extra Sheet if Required)
1	1.36	65.00				
2	0.30	66.00				
3	0.18	50.00				
4	0.02	55.00				
5	0.00	44.00				
6	0.00	53.00				
7	0.00	54.00				
8	0.00	44.00				
9	0.00	57.00				
10	0.00	71.00				
11	0.00	57.00				
12	0.00	46.00				
13	0.00	41.00				
14	0.00	48.00				
15	0.00	46.00				
16	0.00	41.00				
17	0.10	38.00				
18	0.00	38.00				
19	0.00	33.00				
20	0.00	38.00				
21	0.00	62.00				
22	0.02	62.00				
23	0.05	42.00				
24	0.00	24.00				
25	0.00	36.00				
26	0.00	45.00				
27	0.00	46.00				
28	0.00	31.00				
29	0.00	46.00				
30	0.30	59.00				
31	0.80	37.00				

Total Rain	Avg. Max. Temp.	Total Leachate Generated	Total Leachate Recirculated
3.13	47.58	0	0

Weather information was provided by State Climate Office of North Carolina at NC State University

JOHNSTON COUNTY MSW LANDFILL - PHASE 5
LEACHATE RECIRCULATION
LEACHATE RECIRCULATION MONTHLY REPORTING FORM

February-03

Day	Rain (Inch)	Max. Temp.	Leachate Generated	Leachate Recirculated	Injection Galleries Used	Problems / Weather (Use Extra Sheet if Required)
1	0.03	38.00				
2	0.00	50.00				
3	0.00	57.00				
4	0.01	70.00				
5	0.30	40.00				
6	0.00	50.00				
7	1.12	44.00				
8	0.00	45.00				
9	0.00	43.00				
10	0.33	50.00				
11	0.23	45.00				
12	0.00	52.00				
13	0.00	58.00				
14	0.00	58.00				
15	0.15	53.00				
16	0.10	55.00				
17	0.88	31.00				
18	0.00	33.00				
19	0.00	45.00				
20	0.05	53.00				
21	0.00	56.00				
22	0.00	56.00				
23	0.00	73.00				
24	0.00	55.00				
25	0.00	67.00				
26	0.00	54.00				
27	0.40	36.00				
28	0.92	35.00				

Total Rain	Avg. Max. Temp.	Total Leachate Generated	Total Leachate Recirculated
4.52	50.07	0	0

Weather information was provided by State Climate Office of North Carolina at NC State University

JOHNSTON COUNTY MSW LANDFILL - PHASE 5
LEACHATE RECIRCULATION
LEACHATE RECIRCULATION MONTHLY REPORTING FORM

March-03

Day	Rain (Inch)	Max. Temp.	Leachate Generated	Leachate Recirculated	Injection Galleries Used	Problems / Weather (Use Extra Sheet if Required)
1	0.00	43.00				
2	1.06	49.00				
3	0.00	64.00				
4	0.00	53.00				
5	0.23	62.00				
6	1.33	64.00				
7	0.16	65.00				
8	0.00	38.00				
9	0.00	64.00				
10	0.00	75.00				
11	0.00	57.00				
12	0.05	53.00				
13	0.00	73.00				
14	0.95	74.00				
15	0.02	74.00				
16	0.68	74.00				
17	0.03	71.00				
18	0.00	68.00				
19	0.01	69.00				
20	0.75	54.00				
21	1.27	67.00				
22	0.00	72.00				
23	0.00	73.00				
24	0.00	70.00				
25	0.00	70.00				
26	0.00	75.00				
27	0.00	79.00				
28	0.00	67.00				
29	0.12	76.00				
30	0.64	76.00				
31	0.60	46.00				

Total Rain	Avg. Max. Temp.	Total Leachate Generated	Total Leachate Recirculated
7.9	65.00	0	0

Weather information was provided by State Climate Office of North Carolina at NC State University

JOHNSTON COUNTY MSW LANDFILL - PHASE 5
LEACHATE RECIRCULATION
LEACHATE RECIRCULATION MONTHLY REPORTING FORM

April-03

Day	Rain (Inch)	Max. Temp.	Leachate Generated	Leachate Recirculated	Injection Galleries Used	Problems / Weather (Use Extra Sheet if Required)
1	0.00	52.00				
2	0.00	69.00				
3	0.00	78.00				
4	0.00	82.00				
5	0.00	79.00				
6	0.00	77.00				
7	0.15	69.00				
8	0.83	45.00				
9	1.00	46.00				
10	0.00	46.00				
11	0.50	52.00				
12	0.00	50.00				
13	0.00	74.00				
14	0.00	74.00				
15	0.00	76.00				
16	0.00	80.00				
17	0.00	81.00				
18	0.00	81.00				
19	0.03	54.00				
20	0.00	69.00				
21	-	-				
22	0.00	74.00				
23	-	-				
24	0.00	75.00				
25	0.01	71.00				
26	-	-				
27	0.17	71.00				
28	0.00	75.00				
29	-	-				
30	0.00	84.00				

Total Rain	Avg. Max. Temp.	Total Leachate Generated	Total Leachate Recirculated
2.69	68.62	0	0

Weather information was provided by State Climate Office of North Carolina at NC State University

JOHNSTON COUNTY MSW LANDFILL - PHASE 5
LEACHATE RECIRCULATION
LEACHATE RECIRCULATION MONTHLY REPORTING FORM

May-03

Day	Rain (Inch)	Max. Temp.	Leachate Generated	Leachate Recirculated	Injection Galleries Used	Problems / Weather (Use Extra Sheet if Required)
1	0.00	84.00				
2	0.00	79.00				
3	0.00	85.00				
4	-	-				
5	0.00	64.00		4864	1	
6	0.64	67.00		2055	8,9	
7	-	-		1513	5	
8	0.00	83.00		5142	8,9	
9	0.00	88.00				
10	0.00	90.00				
11	0.00	89.00				
12	0.00	86.00		5227	2	
13	0.00	79.00		5808	2	
14	0.00	77.00		8268	2	
15	0.00	79.00				
16	0.18	73.00		3896	8	
17	0.00	79.00				
18	0.01	65.00				
19	0.88	60.00				
20	0.03	67.00		9810	2,3	
21	0.00	77.00		7044	5	
22	0.93	78.00				
23	1.00	65.00				
24	0.25	70.00				
25	0.00	74.00				
26	0.25	79.00				
27	0.19	78.00				
28	0.01	69.00				
29	0.00	78.00				
30	0.11	77.00				
31	0.00	80.00				

Total Rain	Avg. Max. Temp.	Total Leachate Generated	Total Leachate Recirculated
4.48	76.52	0	53,627

Weather information was provided by State Climate Office of North Carolina at NC State University

Appendix D

Leachate Quality Data

April 26, 2001

Johnston County

DEPARTMENT of PUBLIC UTILITIES

Solid Waste Division

FIELD MEASUREMENTS

Spring 2001Sampling Event (4/5/01 & 4/9/01)

Phase 5 (Lined) Landfill

Kevin J. Shields : Collector

*** ALL DEDICATED WELLS except Surface Water and Leachate points ***

Well Identification #	Static Water Level (ft) ***(DTW)***	Temperature (°C)	Turbidity (NTU)	pH	Specific Conductivity (uS/cm)
MW – 1	24.72	16.60	873	4.23	110.00
MW – 2	4.75	12.85	16.8	4.27	150.00
MW – 3	10.04	14.89	90.8	4.49	48.00
MW – 4	5.74	14.31	12.8	4.63	37.00
MW – 5	10.90	14.53	4.18	4.45	41.00
MW – 6	30.44	16.93	78.9	4.61	53.00
MW – 7	10.26	13.76	29.9	4.76	50.00
MW – 8	7.68	13.99	2.66	4.96	114.00
MW – 9	11.29	13.68	29.3	4.69	45.00
MW – 10	12.76	14.90	8.30	4.50	40.00
Leachate	N/A	15.20	174	6.24	1688.00
Lagoon Lchte. #1	13.80	13.15	8.56	4.58	88.00
Lagoon Lchte. #2	14.72	15.31	4.00	4.84	84.00
Lagoon Lchte. #3	17.98	17.06	8.75	4.65	49.00
Lagoon Lchte. #4	7.64	12.68	8.10	4.48	60.00
SW5 – 1	N/A	18.36	15.4	5.54	265.00
SW5 – 2	N/A	16.88	18.0	6.42	112.00

DTW = Depth to water from top of PVC casing.

Environment 1, Incorporated

P.O. BOX [illegible] TRYON DRIVE
GREENVILLE, NC 27835-7085

Drinking Water ID: [illegible]
Wastewater ID: [illegible]

ID#: 6033 A

JOHNSTON CO. LANDFILL (PHASE 5)
MR. KEVIN SHIELDS
P.O. BOX 2263
SMITHFIELD ,NC 27577

DATE COLLECTED: 04/09/01
DATE REPORTED : 04/26/01

REVIEWED BY:

Base/Neu

PARAMETERS	Leachate	Analysis Date	Analyst	Method Code
BOD, mg/l	225	04/10/01	TRB	SM5210B
COD, mg/l	308	04/17/01	TRB	HACH8000
Nitrate Nitrogen, mg/l	0.04	04/11/01	NNR	EPA353.2
Total Phosphorus, mg/l	0.32	04/17/01	NNR	EPA365.4
Antimony, mg/l	<0.030	04/18/01	MLH	EPA7041
Arsenic, mg/l	<0.010	04/25/01	MLH	EPA7060
[illegible]ium, mg/l	<0.500	04/12/01	LFJ	EPA6010B
[illegible]ryllium, mg/l	<0.001	04/12/01	LFJ	EPA6010B
Cadmium, mg/l	<0.001	04/20/01	MLH	EPA7131
Cobalt, mg/l	<0.010	04/12/01	LFJ	EPA6010B
Copper, mg/l	<0.200	04/12/01	WTH	EPA7210
Total Chromium, mg/l	0.011	04/19/01	LFJ	EPA6010B
Lead, mg/l	<0.005	04/13/01	MLH	EPA7421
Nickel, mg/l	<0.050	04/12/01	LFJ	EPA6010B
Selenium, mg/l	<0.020	04/25/01	1	EPA7740
Silver, mg/l	<0.010	04/12/01	LFJ	EPA6010B
Thallium, mg/l	<0.010	04/23/01	MLH	EPA7841
Vanadium, mg/l	<0.040	04/12/01	LFJ	EPA6010B
Zinc, mg/l	1.888	04/12/01	LFJ	EPA6010B
Sulfate, mg/l	10.9	04/23/01	TRB	EPA375.4

Environment 1, Incorporated

P.O. BOX [illegible] 14 OAKMONT DR. [illegible] PHONE [illegible]
GREENVILLE, N.C. 27835-70[illegible] FAX [illegible]

CLIENT: JOHNSTON CO. LANDFILL (PHASE 5)
MR. KEVIN SHIELDS
P.O. BOX 2263
SMITHFIELD, NC 27577

CLIENT ID: 6033 A

ANALYST: NNR
DATE COLLECTED: 04/09/01
DATE ANALYZED: 04/17/01
DATE REPORTED: 04/26/01

REVIEWED BY: _____

VOLATILE ORGANICS
EPA METHOD 8260B

PARAMETERS, ug/l	Leachate
1. Chloromethane	<10.00
2. Vinyl Chloride	<10.00
3. Bromomethane	<10.00
4. Chloroethane	<10.00
5. Trichlorofluoromethane	<5.00
6. 1,1-Dichloroethene	<5.00
7. Acetone	260.00
8. Iodomethane	<10.00
9. Carbon Disulfide	<100.00
10. Methylene Chloride	<10.00
11. trans-1,2-Dichloroethene	<5.00
12. 1,1-Dichloroethane	<5.00
13. Vinyl Acetate	<50.00
14. Cis-1,2-Dichloroethene	<5.00
15. 2-Butanone	386.00
16. Bromochloromethane	<5.00
17. Chloroform	<5.00
18. 1,1,1-Trichloroethane	<5.00
19. Carbon Tetrachloride	<5.00
20. Benzene	<5.00
21. 1,2-Dichloroethane	<5.00
22. Trichloroethene	<5.00
23. 1,2-Dichloropropane	<5.00
24. Bromodichloromethane	<5.00
25. Cis-1,3-Dichloropropene	<5.00
26. 4-Methyl-2-Pentanone	<50.00
27. Toluene	16.00
28. trans-1,3-Dichloropropene	<5.00
29. 1,1,2-Trichloroethane	<5.00
30. Tetrachloroethene	<5.00
31. 2-Hexanone	<50.00
32. Dibromochloromethane	<5.00
33. 1,2-Dibromoethane	<5.00
34. Chlorobenzene	<5.00
35. 1,1,1,2-Tetrachloroethane	<5.00
36. Ethylbenzene	8.40
37. Xylenes	14.00
38. Dibromomethane	<10.00
39. Styrene	<5.00
40. Bromoform	<5.00
41. 1,1,2,2-Tetrachloroethane	<5.00
42. 1,2,3-Trichloropropane	<15.00
43. 1,4-Dichlorobenzene	<5.00
44. 1,2-Dichlorobenzene	<5.00
45. 1,2-Dibromo-3-Chloropropane	<25.00
46. Acrylonitrile	<200.00
47. trans-1,4-Dichloro-2-Butene	<100.00

COUNTY OF JOHNSTON; 19198971452; JUN-3-03 12:30; PAGE 12/13

Environment 1, Incorporated

[redacted]

Drinking Water ID: 37716
Wastewater ID: 16

ID#: 6033 A

JOHNSTON CO. LANDFILL (PHASE 5)
MR. KEVIN SHIELDS
P.O. BOX 2263
SMITHFIELD ,NC 27577

DATE COLLECTED: 10/01/01
DATE REPORTED : 10/16/01

Baseline

REVIEWED BY:

PARAMETERS	Leachate	Analysis Date	Analyst	Method Code
BOD, mg/l	56	10/02/01	TRB	SM5210B
COD, mg/l	243	10/03/01	TRB	HACH8000
Nitrate Nitrogen, mg/l	<0.04	10/03/01	NNR	EPA353.2
Total Phosphorus, mg/l	0.54	10/09/01	NNR	EPA365.4
Antimony, mg/l	<0.030	10/09/01	MLH	EPA7041
Arsenic, mg/l	<0.010	10/15/01	MLH	EPA7060
Barium, mg/l	<0.500	10/04/01	LFJ	EPA6010B
Beryllium, mg/l	<0.002	10/04/01	LFJ	EPA6010B
Cadmium, mg/l	<0.001	10/12/01	MLH	EPA7131
Cobalt, mg/l	<0.010	10/04/01	LFJ	EPA6010B
Copper, mg/l	<0.200	10/10/01	MLH	EPA7210
Total Chromium, mg/l	<0.010	10/04/01	LFJ	EPA6010B
Lead, mg/l	<0.010	10/14/01	MLH	EPA7421
Nickel, mg/l	<0.050	10/04/01	LFJ	EPA6010B
Selenium, mg/l	<0.020	10/13/01	MLH	EPA7740
Silver, mg/l	<0.010	10/04/01	LFJ	EPA6010B
Thallium, mg/l	<0.010	10/16/01	MLH	EPA7841
Vanadium, mg/l	<0.040	10/04/01	LFJ	EPA6010B
Zinc, mg/l	1.735	10/04/01	LFJ	EPA6010B
Sulfate, mg/l	20.1	10/05/01	TRB	EPA375.4

Environment 1, Incorporated

[redacted]
PO BOX 7085, 1200 KNIGHT DRIVE
GREENVILLE, NC 27835-7085

CLIENT: JOHNSTON CO. LANDFILL (PHASE 5)
MR. KEVIN SHIELDS
P.O. BOX 2263
SMITHFIELD, NC 27577

CLIENT ID: 6033 A
ANALYST: NNR
DATE COLLECTED: 10/01/01
DATE ANALYZED: 10/09/01
DATE REPORTED: 10/16/01

Page: 1

REVIEWED BY:

VOLATILE ORGANICS
EPA METHOD 8260B

PARAMETERS, ug/l	Leachate
1. Chloromethane	<10.00
2. Vinyl Chloride	<10.00
3. Bromomethane	<10.00
4. Chloroethane	<10.00
5. Trichlorofluoromethane	<5.00
6. 1,1-Dichloroethene	<5.00
7. Acetone	<100.00
8. Iodomethane	<10.00
9. Carbon Disulfide	<100.00
10. Methylene Chloride	<10.00
11. trans-1,2-Dichloroethene	<5.00
12. 1,1-Dichloroethane	<5.00
13. Vinyl Acetate	<50.00
14. Cis-1,2-Dichloroethene	<5.00
15. 2-Butanone	<100.00
16. Bromochloromethane	<5.00
17. Chloroform	<5.00
18. 1,1,1-Trichloroethane	<5.00
19. Carbon Tetrachloride	<5.00
20. Benzene	<5.00
21. 1,2-Dichloroethane	<5.00
22. Trichloroethene	<5.00
23. 1,2-Dichloropropane	<5.00
24. Bromodichloromethane	<5.00
25. Cis-1,3-Dichloropropene	<5.00
26. 4-Methyl-2-Pentanone	<50.00
27. Toluene	<5.00
28. trans-1,3-Dichloropropene	<5.00
29. 1,1,2-Trichloroethane	<5.00
30. Tetrachloroethene	<5.00
31. 2-Hexanone	<50.00
32. Dibromochloromethane	<5.00
33. 1,2-Dibromoethane	<5.00
34. Chlorobenzene	<5.00
35. 1,1,1,2-Tetrachloroethane	<5.00
36. Ethylbenzene	<5.00
37. Xylenes	<5.00
38. Dibromomethane	<10.00
39. Styrene	<5.00
40. Bromoform	<5.00
41. 1,1,2,2-Tetrachloroethane	<5.00
42. 1,2,3-Trichloropropane	<15.00
43. 1,4-Dichlorobenzene	<5.00
44. 1,2-Dichlorobenzene	<5.00
45. 1,2-Dibromo-3-Chloropropane	<25.00
46. Acrylonitrile	<200.00
47. trans-1,4-Dichloro-2-Butene	<100.00

May 21, 2002

Johnston County

DEPARTMENT of PUBLIC UTILITIES

Solid Waste Division

FIELD MEASUREMENTS

Phase 5 (Lined) Landfill

Spring 2002 Groundwater Sampling Event (5/20/02)

Kevin J. Shields: Collector

⊙ALL DEDICATED WELLS except Surface Water and Leachate⊙

Well Identification #	Static Water Level (ft) ***(DTW)**	Temperature (°C)	Turbidity (NTU)	pH	Specific Conductivity (uS/cm)
MW – 1	25.46	17.18	47.8	4.10	92.0
MW – 2	6.26	16.67	>1000	4.02	205.00
MW – 3	11.02	16.31	>1000	3.84	56.00
MW – 4	8.52	15.09	27.4	4.24	39.00
MW – 5	13.28	15.95	41.2	4.05	40.00
MW – 6	31.16	16.87	284	4.29	59.00
MW – 7	11.72	15.80	803	4.32	53.00
MW – 8	9.10	15.95	33.9	4.83	119.00
MW – 9	13.44	15.56	21.4	4.10	65.00
MW – 10	14.82	15.85	36.9	4.20	41.00
Leachate **	N/A	22.81	105	6.75	1180.00
Lagoon Lchte. #1	Below Pump Head	14.68	4.65	5.28	75.00
Lagoon Lchte. #2	18.54	15.39	8.19	5.29	82.00
Lagoon Lchte. #3	20.34	15.54	4.77	4.90	50.00
Lagoon Lchte. #4	9.80	14.02	15.8	5.17	75.00
SW5 – 1	N/A	14.49	9.43	6.64	331.00
SW5 – 2	N/A	12.48	9.42	6.62	55.00

**** DTW = Depth to water from top of PVC casing.***

** Sampling performed on 5/15/02

Environment 1, Incorporated

P.O. BOX 7085, 114 OAKMONT DRIVE
GREENVILLE, N.C. 27835-7085

PHONE (252) 756-0205
FAX (252) 756-0633

Drinking Water
Wastewater

ID#: 6033 A

JOHNSTON CO. LANDFILL (PHASE 5)
MR. KEVIN SHIELDS
P.O. BOX 2263
SMITHFIELD ,NC 27577

DATE COLLECTED: 05/15/02
DATE REPORTED : 06/11/02

REVIEWED BY:

PARAMETERS	Leachate	Analysis Date	Analyst	Method Code
BOD, mg/l	50	05/16/02	TRB	SM5210B
COD, mg/l	385	05/30/02	TRB	HACH8000
Nitrate Nitrogen, mg/l	0.04	05/16/02	WWM	EPA353.2
Total Phosphorus, mg/l	0.56	05/17/02	WWM	EPA365.4
Antimony, mg/l	<0.030	06/06/02	MLH	EPA7041
Arsenic, mg/l	<0.010	06/03/02	MLH	EPA7060
[illegible]rium, mg/l	<0.500	05/29/02	LFJ	EPA6010B
[illegible]eryllium, mg/l	<0.002	05/20/02	LFJ	EPA6010B
Cadmium, mg/l	<0.001	06/05/02	MLH	EPA7131
Cobalt, mg/l	<0.010	05/20/02	LFJ	EPA6010B
Copper, mg/l	<0.200	05/30/02	MLH	EPA7210
Total Chromium, mg/l	<0.010	05/20/02	LFJ	EPA6010B
Lead, mg/l	<0.010	06/07/02	MLH	EPA7421
Nickel, mg/l	<0.050	05/20/02	LFJ	EPA6010B
Selenium, mg/l	<0.020	05/30/02	MLH	EPA7740
Silver, mg/l	<0.010	05/20/02	LFJ	EPA6010B
Thallium, mg/l	<0.010	05/29/02	MLH	EPA7841
Vanadium, mg/l	<0.040	05/20/02	LFJ	EPA6010B
Zinc, mg/l	0.262	05/29/02	LFJ	EPA6010B
Sulfate, mg/l	14.0	05/29/02	TRB	EPA375.4

Laboratory Analyses — Environmental Consultants

Environment 1, Incorporated

P.O. BOX 7085, 114 OAKMONT DRIVE
GREENVILLE, N.C. 27835-7085
PHONE (252) 75[illegible]
FAX (252) 75[illegible]

CLIENT: JOHNSTON CO. LANDFILL (PHASE 5)
MR. KEVIN SHIELDS
P.O. BOX 2263
SMITHFIELD, NC 27577

CLIENT ID: 6033 A

ANALYST: MAO
DATE COLLECTED: 05/15/02
DATE ANALYZED: 05/23/02
DATE REPORTED: 06/11/02

Page: 1

REVIEWED BY:

VOLATILE ORGANICS
EPA METHOD 8260B

PARAMETERS, ug/l	Leachate
1. Chloromethane	<10.00
2. Vinyl Chloride	<10.00
3. Bromomethane	<10.00
4. Chloroethane	<10.00
5. Trichlorofluoromethane	<5.00
6. 1,1-Dichloroethene	<5.00
7. Acetone	<100.00
8. Iodomethane	<10.00
9. Carbon Disulfide	<100.00
10. Methylene Chloride	<10.00
11. trans-1,2-Dichloroethene	<5.00
12. 1,1-Dichloroethane	<5.00
13. Vinyl Acetate	<50.00
14. Cis-1,2-Dichloroethene	<5.00
15. 2-Butanone	<100.00
16. Bromochloromethane	<5.00
17. Chloroform	<5.00
18. 1,1,1-Trichloroethane	<5.00
19. Carbon Tetrachloride	<5.00
20. Benzene	<5.00
21. 1,2-Dichloroethane	<5.00
22. Trichloroethene	<5.00
23. 1,2-Dichloropropane	<5.00
24. Bromodichloromethane	<5.00
25. Cis-1,3-Dichloropropene	<5.00
26. 4-Methyl-2-Pentanone	<50.00
27. Toluene	<5.00
28. trans-1,3-Dichloropropene	<5.00
29. 1,1,2-Trichloroethane	<5.00
30. Tetrachloroethene	<5.00
31. 2-Hexanone	<50.00
32. Dibromochloromethane	<5.00
33. 1,2-Dibromoethane	<5.00
34. Chlorobenzene	<5.00
35. 1,1,1,2-Tetrachloroethane	<5.00
36. Ethylbenzene	<5.00
37. Xylenes	<5.00
38. Dibromomethane	<10.00
39. Styrene	<5.00
40. Bromoform	<5.00
41. 1,1,2,2-Tetrachloroethane	<5.00
42. 1,2,3-Trichloropropane	<15.00
43. 1,4-Dichlorobenzene	<5.00
44. 1,2-Dichlorobenzene	<5.00
45. 1,2-Dibromo-3-Chloropropane	<25.00
46. Acrylonitrile	<200.00
47. trans-1,4-Dichloro-2-Butene	<100.00

Laboratory Analyses — Environmental Consultants

November 7, 2002

Johnston County

DEPARTMENT of PUBLIC UTILITIES

Solid Waste Division

FIELD MEASUREMENTS

Phase 5 (Lined) Landfill & Leachate Pond (Appendix I Analysis)

~~Spring~~ Fall 2002 Groundwater Sampling Event (11/4/02, 11/6 & 7/02)

Kevin J. Shields: Collector

⊙ALL DEDICATED WELLS except Surface Water and Leachate⊙

Well Identification #	Static Water Level (ft) ***(DTW)**	Temperature (°C)	Turbidity (NTU)	pH	Specific Conductivity (uS/cm)
MW – 1	26.28	18.40	108	4.43	103.00
MW – 2	5.54	17.89	44.5	4.28	271.00
MW – 3	10.60	19.50	109	4.57	56.00
MW – 4	6.52	17.58	11.6	4.67	46.00
MW – 5	12.10	19.26	12.8	4.49	50.00
MW – 6	31.70	18.26	121	4.71	69.00
MW – 7	11.96	18.06	119	4.78	63.00
MW – 8	8.50	19.16	14.5	5.47	110.00
MW – 9	13.0	18.37	28.0	4.72	67.00
MW – 10	14.18	18.55	244	4.39	47.00
Leachate **	N/A	16.09	132	6.99	3090
Lagoon Lchte. #1	Below Pump Head	17.97	6.80	5.43	103.00
Lagoon Lchte. #2	19.22	17.78	7.74	5.60	84.00
Lagoon Lchte. #3	21.14	17.83	7.83	5.59	69.00
Lagoon Lchte. #4	10.96	17.43	25.2	5.60	85.00
SW5 – 1	N/A	12.41	149	6.25	295.00
SW5 – 2	N/A	13.55	205	6.67	173.00

**** DTW = Depth to water from top of PVC casing.***

** Sampling performed on 11/04/02

Environment 1, Incorporated

P.O. BOX 7085, 114 OAKMONT DRIVE
GREENVILLE, N.C. 27835-7085
PHONE (252) 756-[illegible]
FAX (252) 756-[illegible]

Drinking Water ID: [illegible]
Wastewater ID: [illegible]

ID#: 6033 A

JOHNSTON CO. LANDFILL (PHASE 5)
MR. KEVIN SHIELDS
P.O. BOX 2263
SMITHFIELD ,NC 27577

PO# 302

DATE COLLECTED: 11/04/02
DATE REPORTED : 12/17/02

REVIEWED BY:

PARAMETERS	Leachate	Analysis Date	Analyst	Method Code
BOD, mg/l	146	11/05/02	TRB	SM5210B
COD, mg/l	883	11/07/02	TRB	HACH8000
Nitrate Nitrogen, mg/l	5.41	11/06/02	WWM	EPA353.2
Total Phosphorus, mg/l	0.84	11/11/02	WWM	EPA365.4
Antimony, mg/l	<0.030	11/26/02	MLH	EPA7041
Arsenic, mg/l	0.016	11/21/02	MLH	EPA7060
[illegible]ium, mg/l	<0.500	12/14/02	LFJ	EPA6010B
[illegible]ryllium, mg/l	<0.002	12/14/02	LFJ	EPA6010B
Cadmium, mg/l	<0.001	12/05/02	MLH	EPA7131
Cobalt, mg/l	<0.010	12/14/02	LFJ	EPA6010B
Copper, mg/l	<0.200	12/04/02	MLH	EPA7210
Total Chromium, mg/l	0.012	12/14/02	LFJ	EPA6010B
Lead, mg/l	<0.010	12/04/02	MLH	EPA7421
Nickel, mg/l	<0.050	12/06/02	LFJ	EPA7520
Selenium, mg/l	<0.020	11/18/02	MLH	EPA7740
Silver, mg/l	<0.010	12/14/02	LFJ	EPA6010B
Thallium, mg/l	<0.001	11/22/02	MLH	EPA7841
Vanadium, mg/l	<0.040	12/14/02	LFJ	EPA6010B
Zinc, mg/l	4.024	12/02/02	LFJ	EPA7950
Sulfate, mg/l	13.6	11/08/02	TRB	EPA375.4

Laboratory Analyses — Environmental Consultants

Environment 1, Incorporated

P.O. BOX 7085, 114 OAKMONT DRIVE
GREENVILLE, N.C. 27835-7085
PHONE (252) 7[illegible]
FAX (252) 7[illegible]

CLIENT: JOHNSTON CO. LANDFILL (PHASE 5)
MR. KEVIN SHIELDS
P.O. BOX 2263
SMITHFIELD, NC 27577

CLIENT ID: 6033 A
PO# 302
ANALYST: MAO
DATE COLLECTED: 11/04/02
DATE ANALYZED: 11/13/02
DATE REPORTED: 12/17/02

Page: 1

REVIEWED BY:

VOLATILE ORGANICS
EPA METHOD 8260B

PARAMETERS, ug/l	Leachate
1. Chloromethane	<10.00
2. Vinyl Chloride	<10.00
3. Bromomethane	<10.00
4. Chloroethane	<10.00
5. Trichlorofluoromethane	<5.00
6. 1,1-Dichloroethene	<5.00
7. Acetone	<100.00
8. Iodomethane	<10.00
9. Carbon Disulfide	<100.00
10. Methylene Chloride	<10.00
11. trans-1,2-Dichloroethene	<5.00
12. 1,1-Dichloroethane	<5.00
13. Vinyl Acetate	<50.00
14. Cis-1,2-Dichloroethene	<5.00
15. 2-Butanone	<100.00
16. Bromochloromethane	<5.00
17. Chloroform	<5.00
18. 1,1,1-Trichloroethane	<5.00
19. Carbon Tetrachloride	<10.00
20. Benzene	<5.00
21. 1,2-Dichloroethane	<5.00
22. Trichloroethene	<5.00
23. 1,2-Dichloropropane	<5.00
24. Bromodichloromethane	<5.00
25. Cis-1,3-Dichloropropene	<10.00
26. 4-Methyl-2-Pentanone	<100.00
27. Toluene	<5.00
28. trans-1,3-Dichloropropene	<10.00
29. 1,1,2-Trichloroethane	<5.00
30. Tetrachloroethene	<5.00
31. 2-Hexanone	<50.00
32. Dibromochloromethane	<5.00
33. 1,2-Dibromoethane	<5.00
34. Chlorobenzene	<5.00
35. 1,1,1,2-Tetrachloroethane	<5.00
36. Ethylbenzene	<5.00
37. Xylenes	<5.00
38. Dibromomethane	<10.00
39. Styrene	<10.00
40. Bromoform	<5.00
41. 1,1,2,2-Tetrachloroethane	<5.00
42. 1,2,3-Trichloropropane	<15.00
43. 1,4-Dichlorobenzene	<5.00
44. 1,2-Dichlorobenzene	<5.00
45. 1,2-Dibromo-3-Chloropropane	<25.00
46. Acrylonitrile	<200.00
47. trans-1,4-Dichloro-2-Butene	<100.00

SENT BY: COUNTY OF JOHNSTON; 19198971 52; JUN-3-03 12:28; PAGE 3

June 4, 2003

Johnston County

DEPARTMENT of PUBLIC UTILITIES

Solid Waste Division

FIELD MEASUREMENTS

Phase 5 (Lined) Landfill & Leachate Pond (Appendix I Analysis)

Spring 2003 Groundwater Sampling Event (5/20/03, 6/2/03 & 6/3/03)

Kevin J. Shields: Collector

⊙ALL DEDICATED WELLS except Surface Water and Leachate⊙

Well Identification #	Static Water Level (ft) ***(DTW)**	Temperature (°Celsius)	Turbidity (NTU)	pH	Specific Conductivity (uS/cm)
MW – 1	23.80	18.20	94.8	4.29	118.00
MW – 2	5.50	16.46	36.1	4.25	244.00
MW – 3	10.10	17.23	57.6	4.48	57.00
MW – 4	6.14	16.17	12.0	4.71	40.00
MW – 5	11.14	17.24	17.3	4.55	37.00
MW – 6	28.86	18.93	87.1	4.57	54.00
MW – 7	10.50	15.16	30.4	4.49	60.00
MW – 8	8.46	16.15	2.01	4.96	131.00
MW – 9	11.90	17.26	68.2	4.62	43.00
MW – 10	13.10	16.71	46.2	4.34	42.00
Leachate **	N/A	21.10	192	6.16	2310
Lagoon Lchte. #1	11.06	16.65	9.98	5.24	118.00
Lagoon Lchte. #2	12.74	16.74	18.2	5.53	74.00
Lagoon Lchte. #3	16.96	17.59	34.2	5.37	53.00
Lagoon Lchte. #4	7.34	14.25	15.5	5.54	66.00
SW5 – 1	N/A	16.50	9.22	6.20	255.00
SW5 – 2	N/A	15.06	21.2	6.90	147.00

**** DTW = Depth to water from top of PVC casing.***

** Sampling performed on 5/20/03 - Appendix I and other selected analytes.

Appendix E

Project Drawings

SW-11-028-9 5103 20030613 P-0

Permit:	51-03
Name:	Johnston County MSW Landfill
County:	Johnston
Shipped Date:	
Box:	SW-11-028
Document Type:	Other (O)
Document Date:	6/13/2003
Division:	Waste Management (WM)
Sub-Division:	Solid Waste (SW)
Document Category:	Facility (F)
Document Group:	Authorization or Permit (P)
Description:	Map: . Maps in Roll: 7

JOHNSTON COUNTY NORTH CAROLINA
DEPARTMENT OF PUBLIC UTILITIES

LEACHATE RECIRCULATION FACILITIES
AS-BUILT DRAWINGS

JUNE 2003

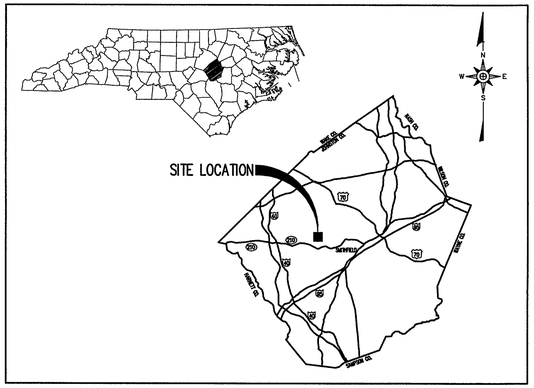

VICINITY MAP
NOT TO SCALE

SHEET	DRAWING	TITLE
1	–	TITLE/COVER SHEET
2	LR1	FORCEMAIN LAYOUT
3	LR2	LEACHATE RECIRCULATION GALLERIES (SHEET 1 OF 2)
4	LR3	LEACHATE RECIRCULATION GALLERIES (SHEET 2 OF 2)
5	LR4	LEACHATE RECIRCULATION DETAILS (SHEET 1 OF 3)
6	LR5	LEACHATE RECIRCULATION DETAILS (SHEET 2 OF 3)
7	LR6	LEACHATE RECIRCULATION DETAILS (SHEET 3 OF 3)

G.N. RICHARDSON & ASSOCIATES, INC.
Engineering and Geological Services
14 N. BOYLAN AVENUE RALEIGH, N.C. 27603
PHONE-919-828-0577 FAX-919-828-3899 WWW.GNRA.COM

NORTH CAROLINA PROFESSIONAL SEAL 021668 ENGINEER PIETER K. SCHEER 6/12/03

FILE NAME JOHN-D0288

G:\CAD\JOHNSTON\john-2\as-built drawings\sheets\JOHN-D0288.dwg DATE: JUN 10, 2003 TIME: 9:55 AM

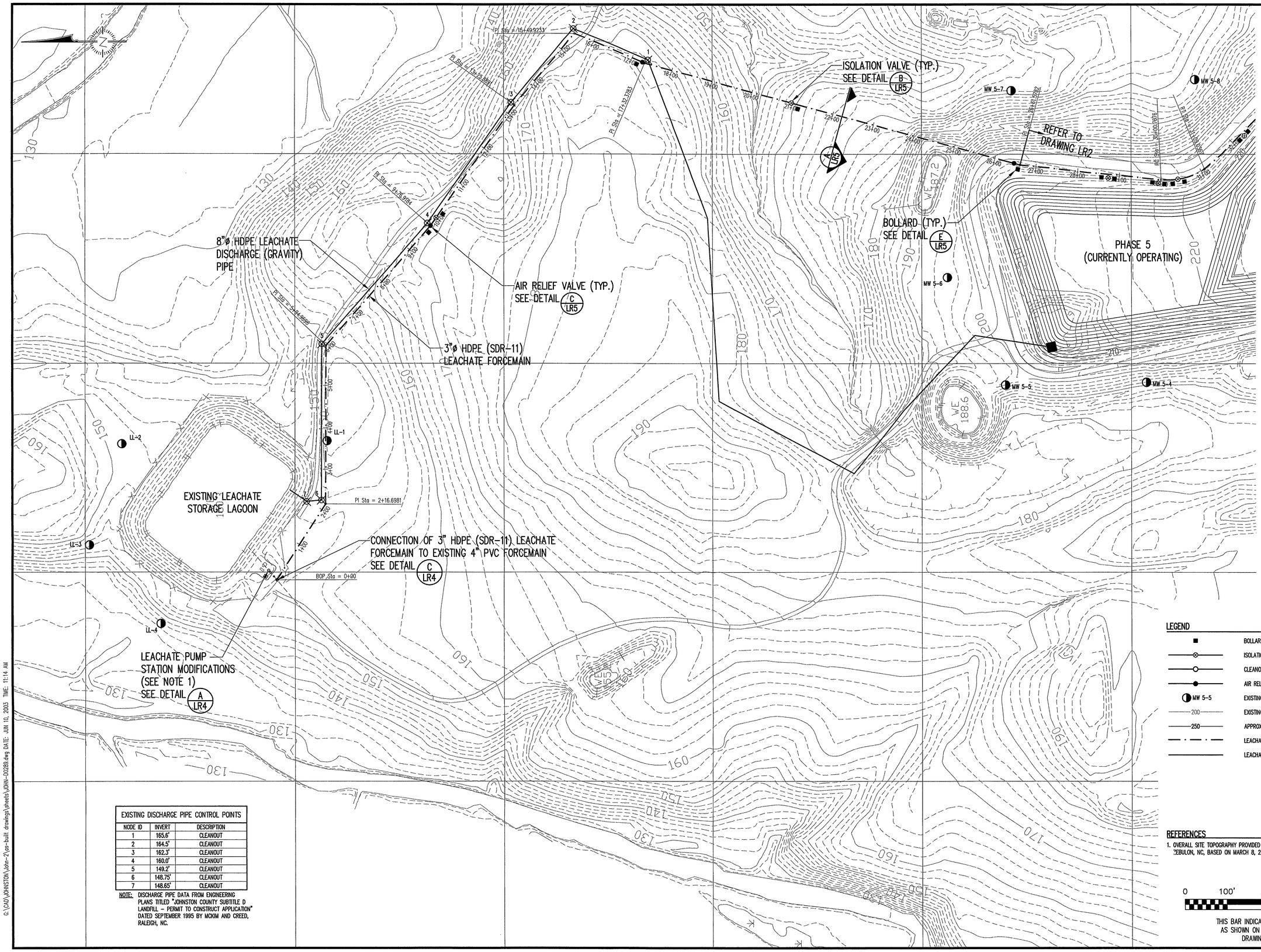

EXISTING DISCHARGE PIPE CONTROL POINTS		
NODE ID	INVERT	DESCRIPTION
1	165.6'	CLEANOUT
2	164.5'	CLEANOUT
3	162.3'	CLEANOUT
4	160.0'	CLEANOUT
5	149.2'	CLEANOUT
6	148.75'	CLEANOUT
7	148.65'	CLEANOUT

NOTE: DISCHARGE PIPE DATA FROM ENGINEERING PLANS TITLED "JOHNSTON COUNTY SUBTITLE D LANDFILL – PERMIT TO CONSTRUCT APPLICATION" DATED SEPTEMBER 1995 BY MCKIM AND CREED, RALEIGH, NC.

LEGEND

- BOLLARD
- ISOLATION VALVE
- CLEANOUT
- AIR RELIEF VALVE
- MW 5-5 — EXISTING MONITORING WELL
- 200 — EXISTING CONTOUR OF ELEVATION
- 250 — APPROXIMATE CONTOUR OF ELEVATION
- LEACHATE RECIRCULATION FORCEMAIN
- LEACHATE DISCHARGE PIPE

REFERENCES

1. OVERALL SITE TOPOGRAPHY PROVIDED BY GEODATA CORPORATION, ZEBULON, NC, BASED ON MARCH 8, 2001 AERIAL PHOTOGRAPHY.

0 100' 200' 300'

THIS BAR INDICATES SCALE AS SHOWN ON ORIGINAL DRAWING

NO.	DATE	REVISION

G.N. RICHARDSON & ASSOCIATES, INC.
Engineering and Geological Services
14 N. BOYLAN AVENUE RALEIGH, N.C. 27603
PHONE-919-828-0577 FAX-919-828-3899 WWW.GNRA.COM

SEAL

SEAL

PROJECT TITLE: JOHNSTON COUNTY LEACHATE RECIRCULATION FACILITIES

DRAWING TITLE: FORCEMAIN LAYOUT

DESIGNED BY: S.A.S.	DRAWN BY: C.T.J.
CHECKED BY: P.K.S.	PROJECT NO.: JOHN-2
SCALE: AS SHOWN	DATE: JUNE 2003
FILE NAME: JOHN-D0289	
SHEET NO. 2	DRAWING NO. LR1

G:\CAD\JOHNSTON\John-2\as-built drawings\sheets\JOHN-D0289.dwg DATE: JUN 10, 2003 TIME: 11:14 AM

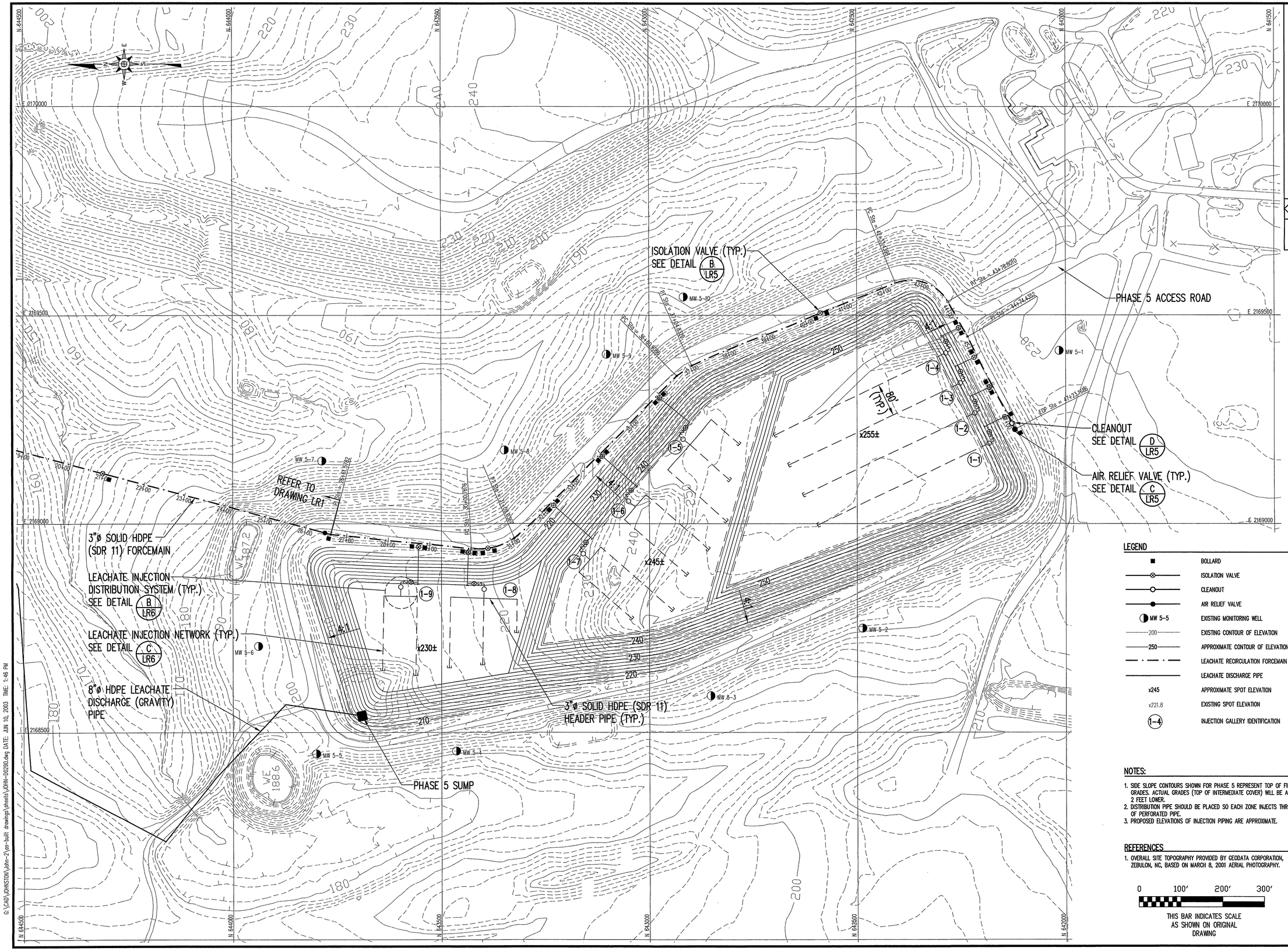

LEGEND

■	BOLLARD
—⊗—	ISOLATION VALVE
—○—	CLEANOUT
—●—	AIR RELIEF VALVE
◑ MW 5-5	EXISTING MONITORING WELL
200	EXISTING CONTOUR OF ELEVATION
250	APPROXIMATE CONTOUR OF ELEVATION
—·—·—	LEACHATE RECIRCULATION FORCEMAIN
——	LEACHATE DISCHARGE PIPE
x245	APPROXIMATE SPOT ELEVATION
x221.8	EXISTING SPOT ELEVATION
(1-4)	INJECTION GALLERY IDENTIFICATION

NOTES:

1. SIDE SLOPE CONTOURS SHOWN FOR PHASE 5 REPRESENT TOP OF FINAL COVER GRADES. ACTUAL GRADES (TOP OF INTERMEDIATE COVER) WILL BE APPROXIMATELY 2 FEET LOWER.
2. DISTRIBUTION PIPE SHOULD BE PLACED SO EACH ZONE INJECTS THROUGH ±400 LF OF PERFORATED PIPE.
3. PROPOSED ELEVATIONS OF INJECTION PIPING ARE APPROXIMATE.

REFERENCES

1. OVERALL SITE TOPOGRAPHY PROVIDED BY GEODATA CORPORATION, ZEBULON, NC, BASED ON MARCH 8, 2001 AERIAL PHOTOGRAPHY.

0 100' 200' 300'

THIS BAR INDICATES SCALE AS SHOWN ON ORIGINAL DRAWING

G.N. RICHARDSON & ASSOCIATES, INC.
Engineering and Geological Services
14 N. BOYLAN AVENUE RALEIGH, N.C. 27603
PHONE-919-828-0577 FAX-919-828-3899 WWW.GNRA.COM

NO.	DATE	REVISION

SEAL

PROJECT TITLE: JOHNSTON COUNTY LEACHATE RECIRCULATION FACILITIES

DRAWING TITLE: LEACHATE RECIRCULATION GALLERIES (SHEET 1 OF 2)

DESIGNED BY: S.A.S.	DRAWN BY: C.T.J.
CHECKED BY: P.K.S.	PROJECT NO.: JOHN-2
SCALE: AS SHOWN	DATE: JUNE 2003
FILE NAME: JOHN-D0290	
SHEET NO. 3	DRAWING NO. LR2

G:\CAD\JOHNSTON\John-2\as-built drawings\sheets\JOHN-D0290.dwg DATE: JUN 10, 2003 TIME: 1:46 PM

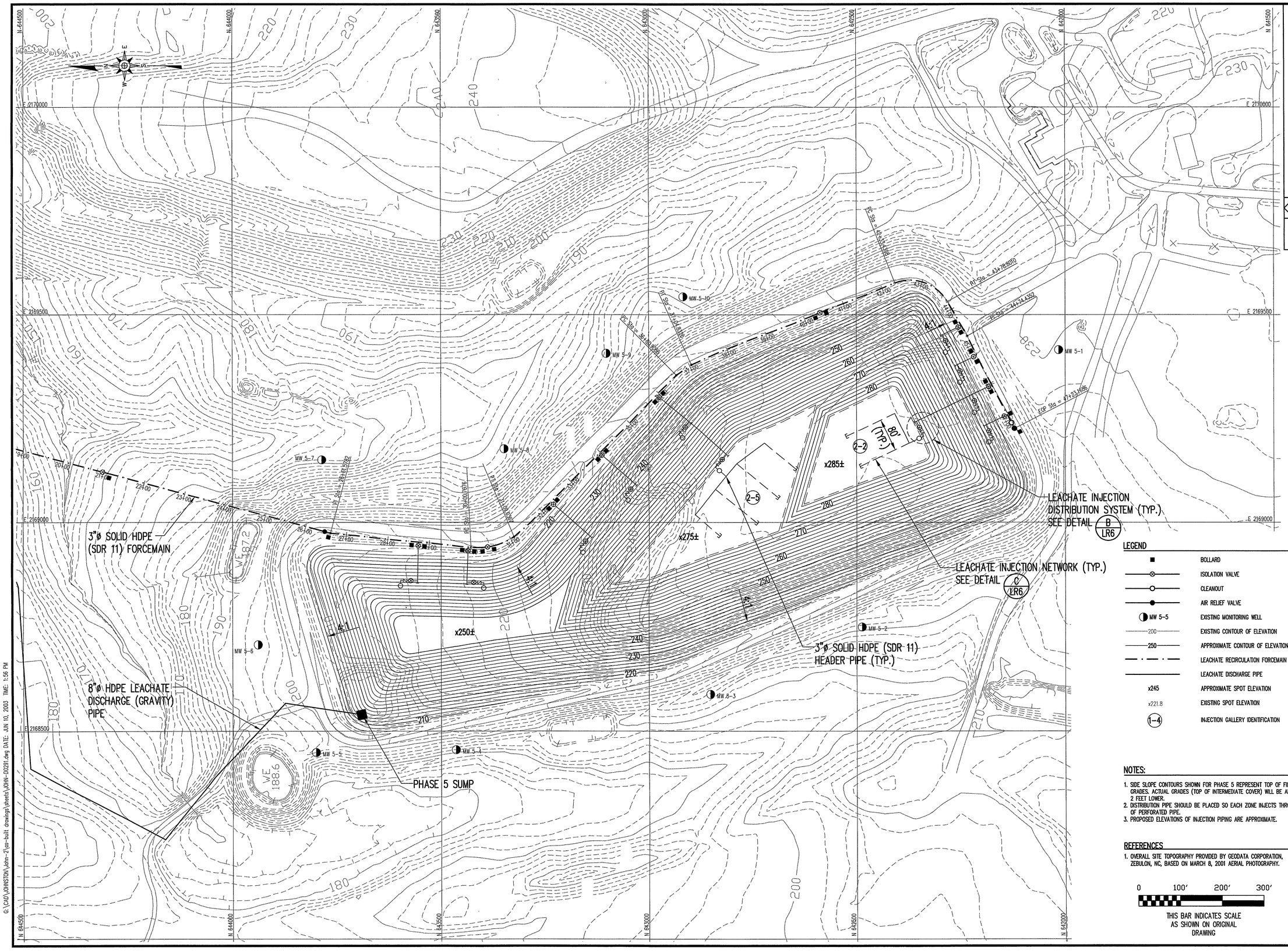

LEGEND

■	BOLLARD
—⊗—	ISOLATION VALVE
—○—	CLEANOUT
—●—	AIR RELIEF VALVE
MW 5-5	EXISTING MONITORING WELL
200	EXISTING CONTOUR OF ELEVATION
250	APPROXIMATE CONTOUR OF ELEVATION
—·—·—	LEACHATE RECIRCULATION FORCEMAIN
——	LEACHATE DISCHARGE PIPE
x245	APPROXIMATE SPOT ELEVATION
x221.8	EXISTING SPOT ELEVATION
1-4	INJECTION GALLERY IDENTIFICATION

NOTES:

1. SIDE SLOPE CONTOURS SHOWN FOR PHASE 5 REPRESENT TOP OF FINAL COVER GRADES. ACTUAL GRADES (TOP OF INTERMEDIATE COVER) WILL BE APPROXIMATELY 2 FEET LOWER.
2. DISTRIBUTION PIPE SHOULD BE PLACED SO EACH ZONE INJECTS THROUGH ±400 LF OF PERFORATED PIPE.
3. PROPOSED ELEVATIONS OF INJECTION PIPING ARE APPROXIMATE.

REFERENCES

1. OVERALL SITE TOPOGRAPHY PROVIDED BY GEODATA CORPORATION, ZEBULON, NC, BASED ON MARCH 8, 2001 AERIAL PHOTOGRAPHY.

0 100' 200' 300'

THIS BAR INDICATES SCALE AS SHOWN ON ORIGINAL DRAWING

DATE	NO.	REVISION

G.N. RICHARDSON & ASSOCIATES, INC.
Engineering and Geological Services
14 N. BOYLAN AVENUE RALEIGH, N.C. 27603
PHONE-919-828-0577 FAX-919-828-3899 WWW.GNRA.COM

SEAL

PROJECT TITLE: JOHNSTON COUNTY LEACHATE RECIRCULATION FACILITIES

DRAWING TITLE: LEACHATE RECIRCULATION GALLERIES (SHEET 2 OF 2)

DESIGNED BY: S.A.S.	DRAWN BY: C.T.J.
CHECKED BY: P.K.S.	PROJECT NO.: JOHN-2
SCALE: AS SHOWN	DATE: JUNE 2003
FILE NAME: JOHN-D0291	
SHEET NO. 4	DRAWING NO. LR3

G:\CAD\JOHNSTON\John-2\as-built drawings\sheets\JOHN-D0291.dwg DATE: JUN 10, 2003 TIME: 1:56 PM

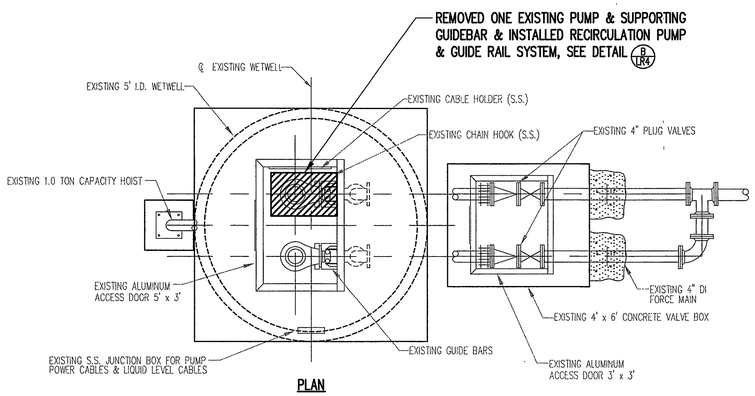

PLAN

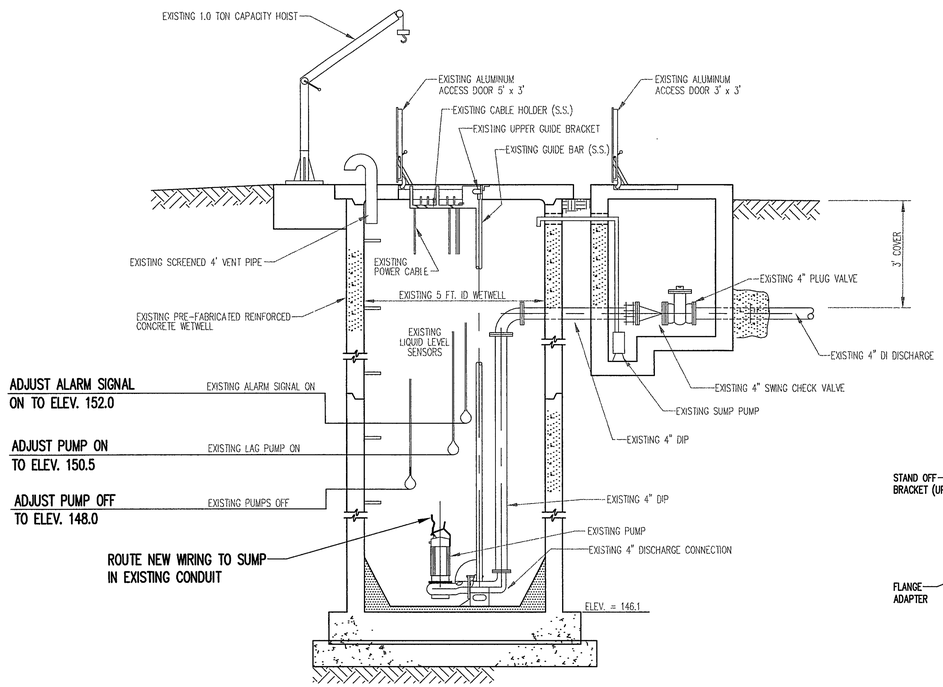

SECTION

EXISTING LEACHATE PUMP STATION

DETAIL A / LR4 N.T.S.

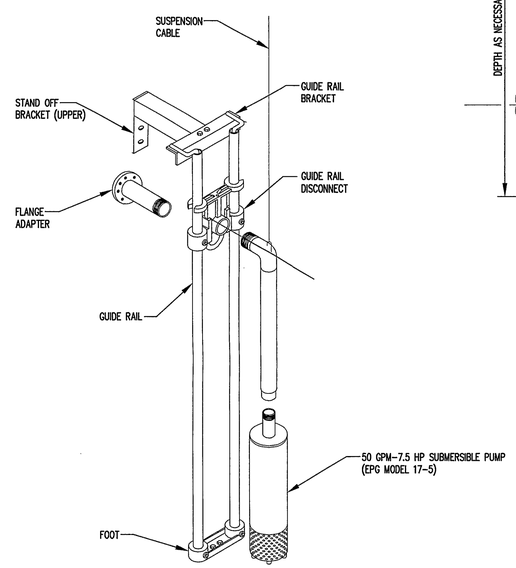

PUMP AND GUIDE RAIL SYSTEM

DETAIL B / LR4 N.T.S.

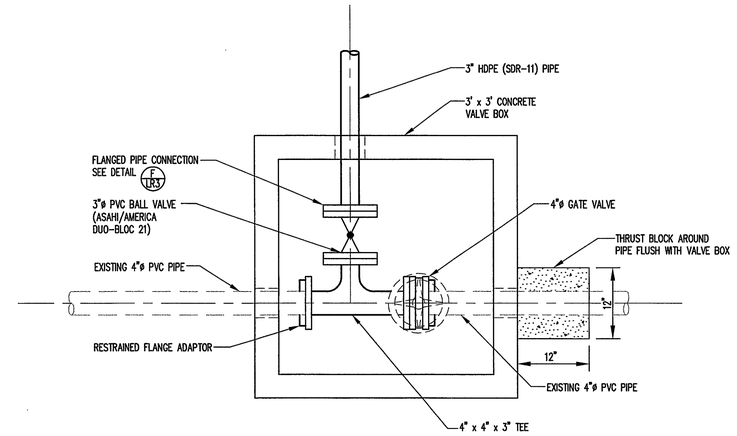

PLAN

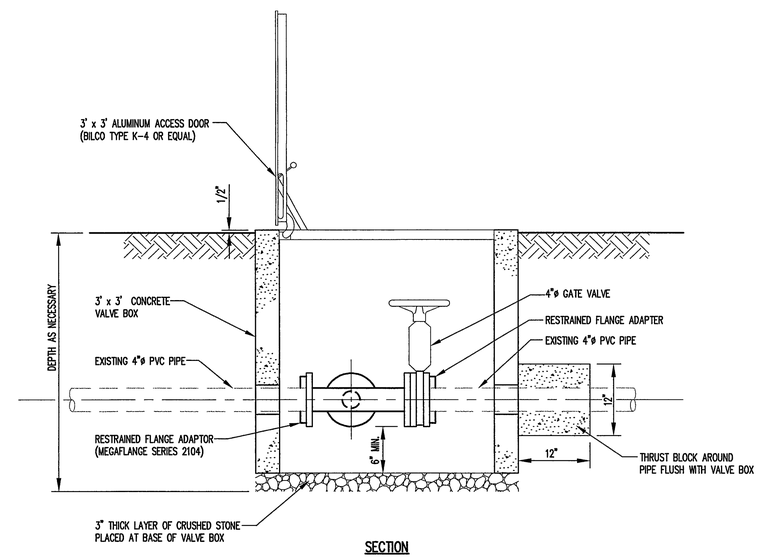

SECTION

TIE-IN TO EXISTING 4" PVC FORCEMAIN

DETAIL C / LR4 N.T.S.

NO.	DATE	REVISION

G.N. RICHARDSON & ASSOCIATES, INC.
Engineering and Geological Services
14 N. BOYLAN AVENUE RALEIGH, N.C. 27603
PHONE-919-828-0577 FAX-919-828-3899 WWW.GNRA.COM

SEAL

PROJECT TITLE: JOHNSTON COUNTY LEACHATE RECIRCULATION FACILITIES

DRAWING TITLE: LEACHATE RECIRCULATION DETAILS (SHEET 1 OF 3)

DESIGNED BY: S.A.S.	DRAWN BY: C.T.J.
CHECKED BY: P.K.S.	PROJECT NO.: JOHN-2
SCALE: AS SHOWN	DATE: JUNE 2003
FILE NAME: JOHN-D0292	
SHEET NO. 5	DRAWING NO. LR4

G:\CAD\JOHNSTON\john-2\as-built drawings\sheets\JOHN-D0292.dwg DATE: JUN 10, 2003 TIME: 2:31 PM

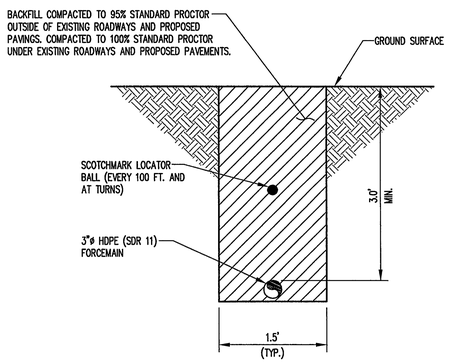

LEACHATE FORCEMAIN PIPE TRENCH

DETAIL A / LR5 N.T.S.

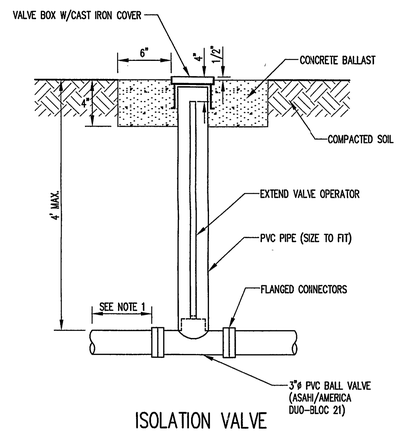

ISOLATION VALVE

DETAIL B / LR5 N.T.S.

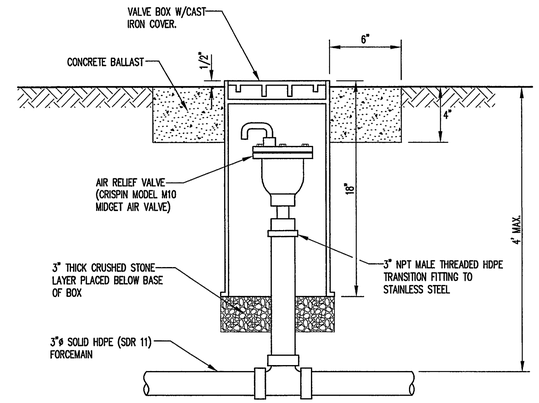

AIR RELIEF ASSEMBLY

DETAIL C / LR5 N.T.S.

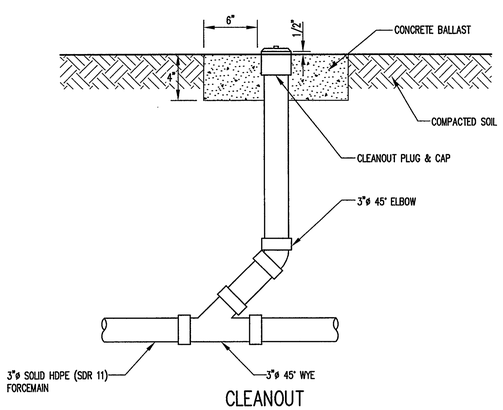

CLEANOUT

DETAIL D / LR5 N.T.S.

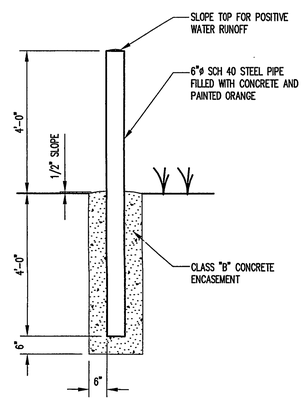

BOLLARD

DETAIL E / LR5 N.T.S.

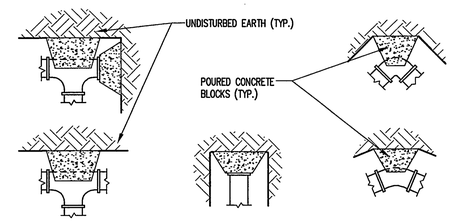

NOTES:

1. THESE DETAILS ARE FOR BOTH VERTICALLY AND HORIZONTALLY LAID PIPE.
2. POURED IN PLACE CONCRETE SHALL BE CLASS B.
3. LEAVE JOINTS CLEAR OF CONCRETE FOR EASY ACCESS.
4. POLYETHYLENE SHALL BE WRAPPED AROUND FITTINGS WHERE CONCRETE BLOCKING WILL EVENTUALLY BE REMOVED.
5. THE CRITICAL CONDITION OF UNDISTURBED EARTH IS ANTICIPATED TO BE SILTY SAND.
6. FITTING FACTORS; 90° – 1.41
   PLUG – 1.00
   45° – 0.77
   22 1/2° – 0.39
   11 1/4° – 0.20

REQUIRED AREA OF BLOCK FACE EARTH BEARING (B) SHALL BE FIGURED AS FOLLOWS
WHERE:

B = AREA OF BLOCK FACE ($FT.^2$)
A = AREA OF PIPE DIA. IN SQ. IN.
P = DESIGN WORKING PRESS, PSI.
C = FITTING FACTOR

$$B = \frac{P\ A\ C}{2000}$$

THRUST BLOCKS

DETAIL F / LR5 N.T.S.

NO.	DATE	REVISION

G.N. RICHARDSON & ASSOCIATES, INC.
Engineering and Geological Services
14 N. BOYLAN AVENUE RALEIGH, N.C. 27603
PHONE-919-828-0577 FAX-919-828-3899 WWW.GNRA.COM

SEAL

SEAL

PROJECT TITLE: JOHNSTON COUNTY LEACHATE RECIRCULATION FACILITIES

DRAWING TITLE: LEACHATE RECIRCULATION DETAILS (SHEET 2 OF 3)

DESIGNED BY: S.A.S.	DRAWN BY: c.t.j.
CHECKED BY: P.K.S.	PROJECT NO.: JOHN-2
SCALE: AS SHOWN	DATE: JUNE 2003
FILE NAME: JOHN-D0293	
SHEET NO. 6	DRAWING NO. LR5

G:\CAD\JOHNSTON\John-2\as-built drawings\sheets\JOHN-D0293.dwg DATE: JUN 10, 2003 TIME: 3:39 PM

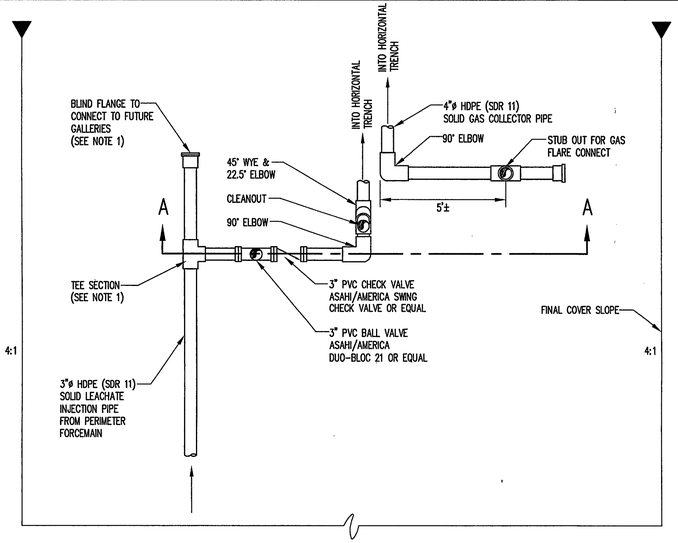

PLAN VIEW

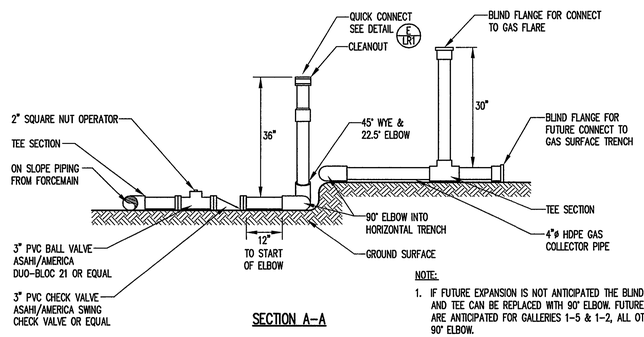

SECTION A-A

NOTE:
1. IF FUTURE EXPANSION IS NOT ANTICIPATED THE BLIND FLANGE AND TEE CAN BE REPLACED WITH 90° ELBOW. FUTURE EXPANSIONS ARE ANTICIPATED FOR GALLERIES 1-5 & 1-2, ALL OTHERS INSTALL 90° ELBOW.

LEACHATE INJECTION DISTRIBUTION SYSTEM

DETAIL B LR6
N.T.S.

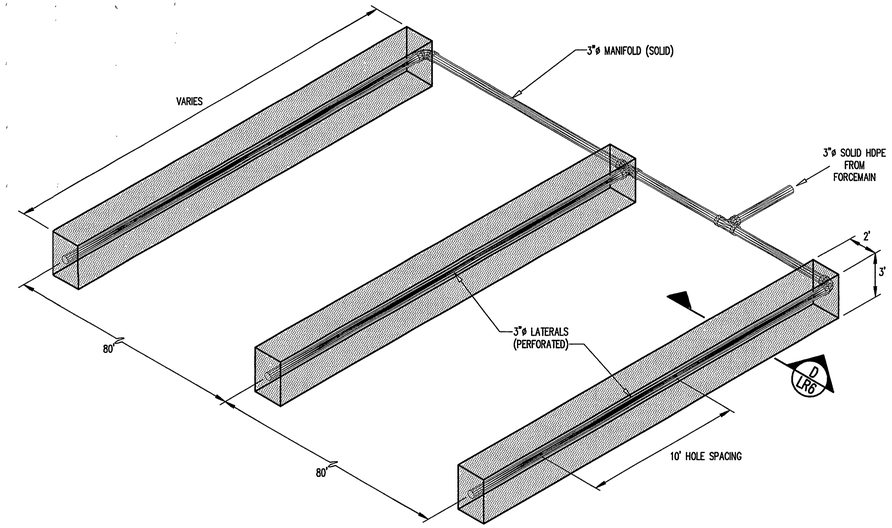

NOTE:
1. GAS COLLECTION PIPING NOT SHOWN FOR CLARITY. GAS COLLECTION PIPING MIRRORS LEACHATE PIPING.

LEACHATE INJECTION NETWORK

DETAIL C LR6
N.T.S.

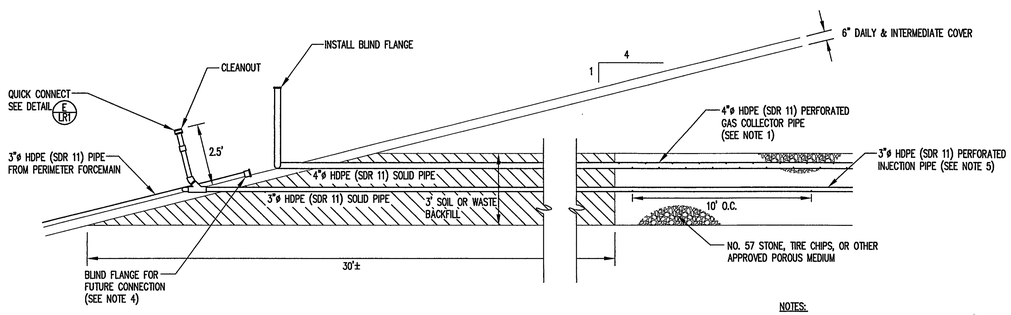

LEACHATE RECIRCULATION/HORIZONTAL GAS COLLECTOR INTERIM CONDITIONS

DETAIL A LR6
N.T.S.

NOTES:
1. PERFORATED GAS COLLECTION PIPE SHALL HAVE 4 ROWS OF 1/2 INCH DIAMETER HOLES AT 6 INCHES ON CENTER EQUALLY SPACED AROUND THE PIPE.
2. ALIGNMENT OF LEACHATE INJECTION PIPE MAY DIFFER FROM PLANS TO REFLECT CONDITIONS IN THE FIELD.
3. SEE DETAIL C LR6 FOR PLAN VIEW OF PIPING ALIGNMENT.
4. IF FUTURE EXPANSION IS NOT ANTICIPATED THE BLIND FLANGE AND TEE CAN BE REPLACED WITH 90° ELBOW.
5. PERFORATED INJECTION PIPE SHALL HAVE 1 ROW OF 1/8 INCH DIAMETER HOLES AT 10 FEET ON CENTER.

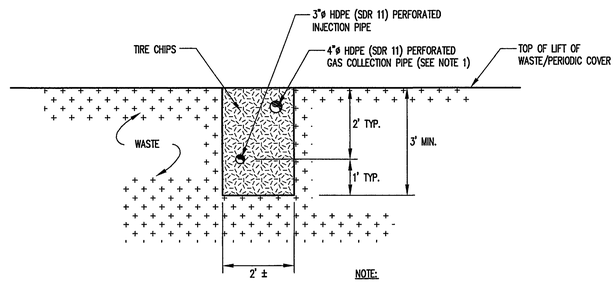

NOTE:
1. 4 ROWS 1/2" DIAMETER AT 6" ON CENTER.

HORIZONTAL GALLERY

DETAIL D LR6
N.T.S.

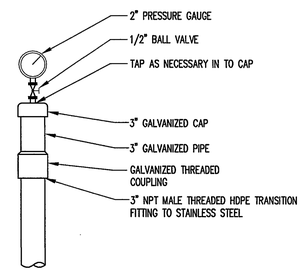

QUICK CONNECT

DETAIL E LR6
N.T.S.

NO.	DATE	REVISION

G.N. RICHARDSON & ASSOCIATES, INC.
Engineering and Geological Services
14 N. BOYLAN AVENUE RALEIGH, N.C. 27603
PHONE-919-828-0577 FAX-919-828-3899 WWW.GNRA.COM

SEAL

PROJECT TITLE: JOHNSTON COUNTY LEACHATE RECIRCULATION FACILITIES

DRAWING TITLE: LEACHATE RECIRCULATION DETAILS (SHEET 3 OF 3)

DESIGNED BY: S.A.S.	DRAWN BY: C.T.J.
CHECKED BY: P.K.S.	PROJECT NO.: JOHN-2
SCALE: AS SHOWN	DATE: JUNE 2003
FILE NAME: JOHN-D0294	
SHEET NO. 7	DRAWING NO. LR6

G:\CAD\JOHNSTON\John-2\as-built drawings\sheets\JOHN-D0294.dwg DATE: JUN 10, 2003 TIME: 3:49 PM