5103Map2007 - Batch No.___

5

Johnston Co.

5103 2007
map

LEACHATE COLLECTION PIPING CONTROL POINTS			
POINT NO.	DESCRIPTION	NORTHING	EASTING
27	CP-27	643213.60	2171095.70
28	CP-28	643245.01	2171098.11
29	CP-29	643298.43	2171133.89
30	CP-30	643346.48	2171197.47
31	CP-31	643365.19	2171248.31
32	CP-32	643407.75	2171292.79
33	CP-33	643616.37	2171405.29
34	CP-34	643838.16	2171516.03
35	CP-35	643890.55	2171539.20
36	CP-36	644001.11	2171587.94
37	CP-37	644032.36	2171610.20
38	CP-38	643251.84	2171360.22
39	CP-39	643240.21	2171370.38
40	CP-40	643461.85	2171561.35
41	CP-41	643448.04	2171575.30
42	CP-42	643654.02	2171771.64
43	CP-43	643640.60	2171783.61
44	CP-44	643870.66	2171482.71
45	CP-45	644064.69	2171427.98
46	CP-46	643875.74	2171947.18
47	CP-47	643856.58	2171984.26
48	CP-48	643854.64	2172015.33
49	CP-49	643810.90	2171943.10
50	CP-50	643759.74	2171939.88
51	CP-51	644185.78	2171484.63
52	CP-52	644326.11	2171408.46
53	CP-53	644349.33	2171412.89
54	CP-54	644245.27	2171366.66
55	CP-55	644244.37	2171292.10
56	CP-56	644235.93	2171263.80
57	CP-57	644279.94	2171266.48

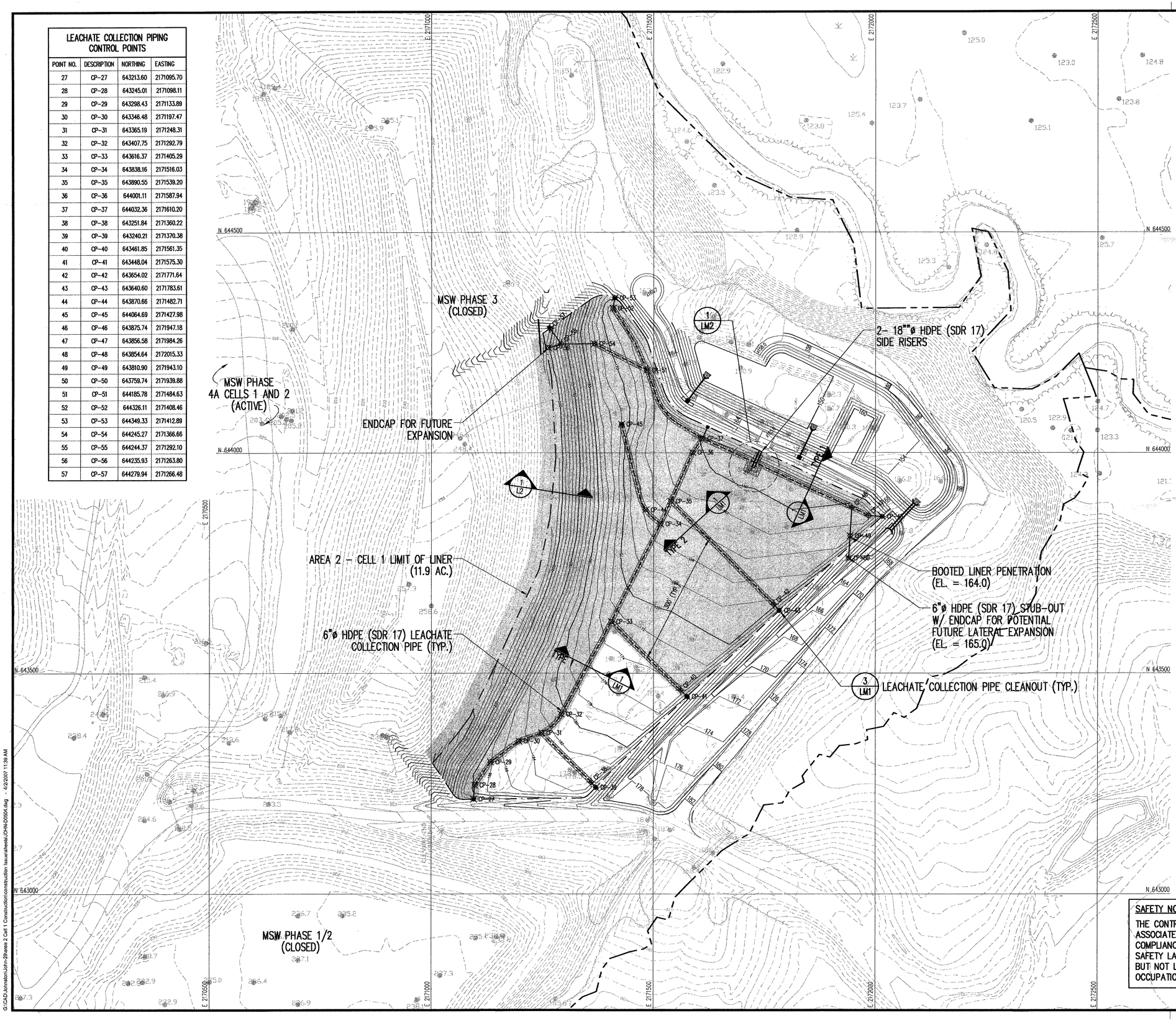

LEGEND

- EXISTING 10' CONTOUR
- EXISTING 2' CONTOUR
- PROPOSED 10' CONTOUR
- PROPOSED 2' CONTOUR
- PROPERTY LINE
- AREA 2 - CELL 1 LIMIT OF LINER
- PERFORATED PIPING/ GRAVEL COLUMNS
- SOLID PIPING
- CLEANOUT
- GEOSYNTHETIC RAIN COVER

NOTES

1. GRADES SHOWN FOR AREA 2 WITHIN THE LIMITS OF LINER REPRESENT AS-BUILT SUBGRADE (SEE REFERENCE 2).
2. REFER TO DETAILS FOR PROPER TIE IN OF LINER SYSTEM AND PROTECTIVE COVER AROUND THE PERIMETER OF AREA 2.

REFERENCES

1. OVERALL SITE TOPOGRAPHY PROVIDED BY GEODATA CORPORATION, BASED ON MAY 21, 2004 AERIAL PHOTOGRAPHY. TOPOGRAPHY IN ACTIVE AREAS PROVIDED BY SPECTRUM NC, LLC, BASED ON MARCH 21, 2005 AERIAL PHOTOGRAPHY. TOPOGRAPHY OF PHASE 4 CELL 2 PROVIDED BY 4D SITE SOLUTIONS INC., DATED JUNE 2, 2005. TOPOGRAPHY IN PHASE 5 AREA PROVIDED BY SOUTHWIND SURVEYING AND ENGINEERING, GARNER, NC, DATED JUNE 16, 2003.
2. ASBUILT SUBGRADE ELEVATIONS FROM FIELD SURVEY DATED FEBRUARY 16 & 23, 2007 AND MARCH 16, 2007 BY BATEMAN CIVIL SURVEY COMPANY P.C., HOLLY SPRINGS, NC.

0 100' 200' 300'
1" = 100'

ISSUED FOR CONSTRUCTION

Permit No. 51-03

SAFETY NOTE:

THE CONTRACTOR IS SOLELY RESPONSIBLE FOR SITE SAFETY ASSOCIATED WITH THE WORK UNDER THIS CONTRACT AND FOR COMPLIANCE WITH ALL FEDERAL, STATE AND LOCAL HEALTH AND SAFETY LAWS, CODES, REGULATIONS, AND ORDINANCES INCLUDING BUT NOT LIMITED TO THOSE CURRENTLY MANDATED BY THE OCCUPATIONAL SAFETY AND HEALTH ADMINISTRATION (OSHA).

NO.	DATE	REVISION

RICHARDSON SMITH GARDNER & ASSOCIATES
Engineering and Geological Services
14 N. Boylan Ave.
Raleigh, N.C. 27603
ph: 919-828-0577
fax: 919-828-3899
www.rsgengineers.com

SEAL

PROJECT TITLE: JOHNSTON COUNTY C&D LANDFILL
AREA 2 - CELL 1
CONSTRUCTION DRAWINGS

DRAWING TITLE: CELL 1
REVISED LEACHATE COLLECTION SYSTEM PLAN AND GEOSYNTHETIC RAIN COVER

DESIGNED BY: P.K.S.	DRAWN BY: C.T.J.
CHECKED BY:	PROJECT NO.: JOHN-29
SCALE: AS SHOWN	DATE: MARCH 2007
FILE NAME: JOHN-D0504	
SHEET NO.	DRAWING NO. C1

G:\CAD\Johnston\John-29\area 2 Cell 1 Construction\construction Issue\sheets\JOHN-D0504.dwg - 4/2/2007 11:39 AM

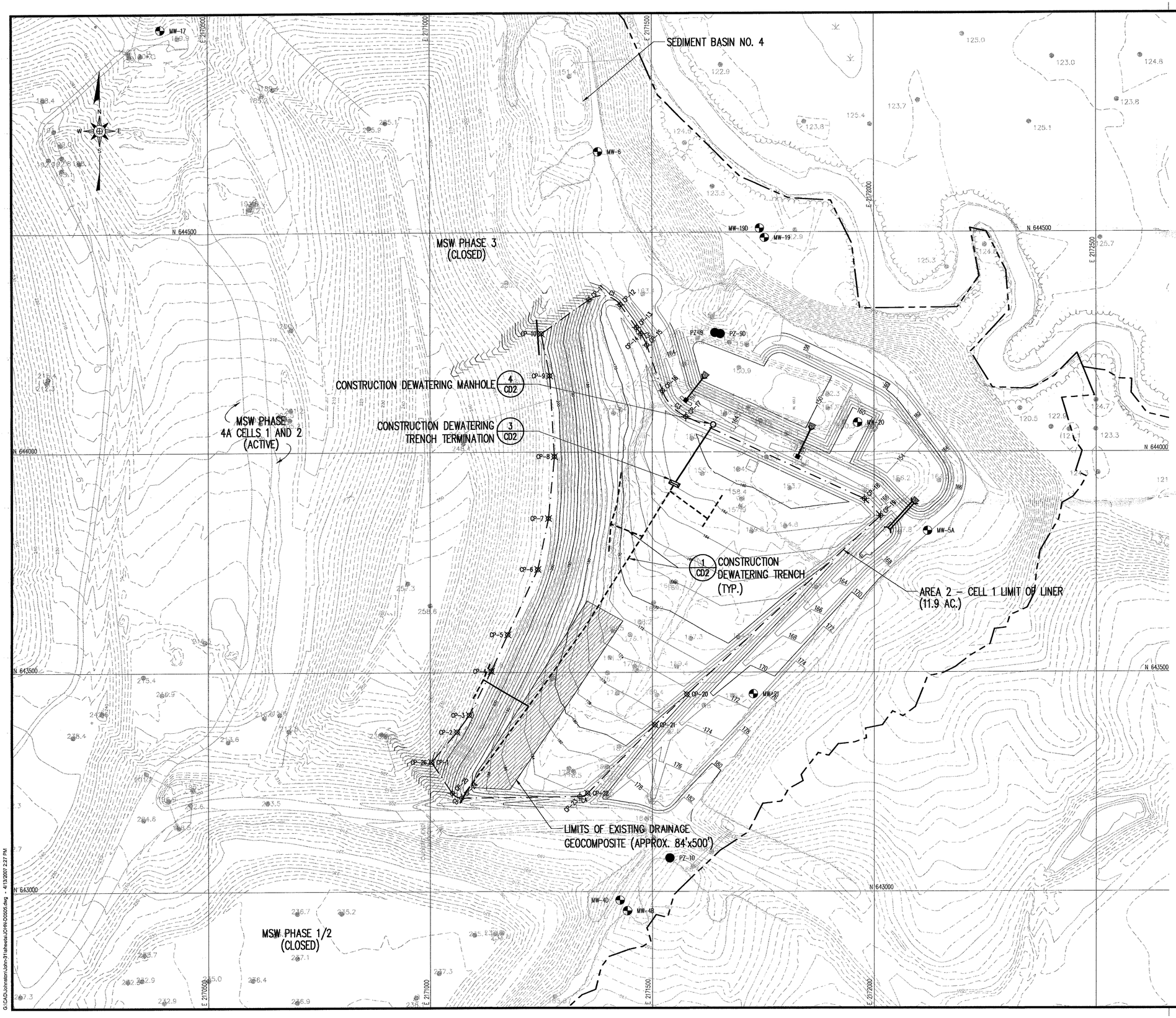

AS-BUILT

LEGEND

- EXISTING 10' CONTOUR
- EXISTING 2' CONTOUR
- PROPOSED/AS-BUILT 10' CONTOUR
- PROPOSED/AS-BUILT 2' CONTOUR
- SOLID PIPE
- CONSTRUCTION DEWATERING TRENCH
- PROPERTY LINE
- AREA 2 – CELL 1 LIMIT OF LINER
- MW-8D EXISTING MONITORING WELL
- EXISTING DRAINAGE GEOCOMPOSITE (APPROXIMATE)

NOTES

1. GRADES SHOWN FOR AREA 2 REPRESENT TOP OF SUBGRADE.

REFERENCES

1. OVERALL SITE TOPOGRAPHY PROVIDED BY GEODATA CORPORATION, BASED ON MAY 21, 2004 AERIAL PHOTOGRAPHY. TOPOGRAPHY IN ACTIVE AREAS PROVIDED BY SPECTRUM NC, LLC, BASED ON MARCH 21, 2005 AERIAL PHOTOGRAPHY. TOPOGRAPHY OF PHASE 4 CELL 2 PROVIDED BY 4D SITE SOLUTIONS INC., DATED JUNE 2, 2005. TOPOGRAPHY IN PHASE 5 AREA PROVIDED BY SOUTHWIND SURVEYING AND ENGINEERING, GARNER, NC, DATED JUNE 16, 2003.
2. ASBUILT SUBGRADE ELEVATIONS FROM FIELD SURVEY DATED FEBRUARY 16 & 23, 2007 AND MARCH 16, 2007 BY BATEMAN CIVIL SURVEY COMPANY P.C., HOLLY SPRINGS, NC.

0 100' 200' 300'

NO.	DATE	REVISION

RICHARDSON SMITH GARDNER & ASSOCIATES
Engineering and Geological Services
14 N. Boylan Ave.
Raleigh, N.C. 27603
www.rsgengineers.com
ph: 919-828-0577
fax: 919-828-3899

SEAL

PROJECT TITLE: JOHNSTON COUNTY C&D LANDFILL
AREA 2 - CELL 1
CONSTRUCTION DRAWINGS

DRAWING TITLE: CELL 1
CONSTRUCTION DEWATERING
PLAN

DESIGNED BY: G.G.M.	DRAWN BY: C.T.J.
CHECKED BY:	PROJECT NO.: JOHN-31
SCALE: AS SHOWN	DATE: APRIL 2007
FILE NAME: JOHN-D0505	
SHEET NO. 1	DRAWING NO. CD1

Permit No. 51-03

G:\CAD\Johnston\John-31\Interim\JOHN-D0505.dwg - 4/13/2007 2:27 PM

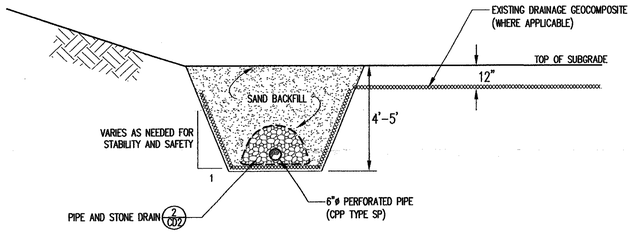

CONSTRUCTION DEWATERING TRENCH

DETAIL 1/CD2
NOT TO SCALE

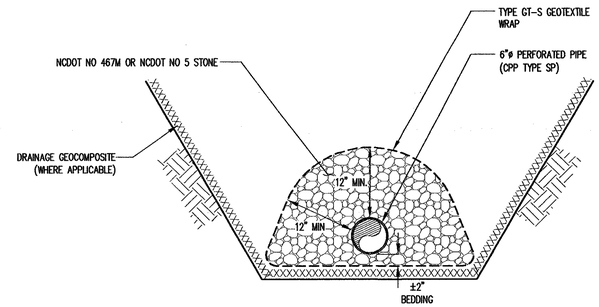

PIPE AND STONE DRAIN

DETAIL 2/CD2
NOT TO SCALE

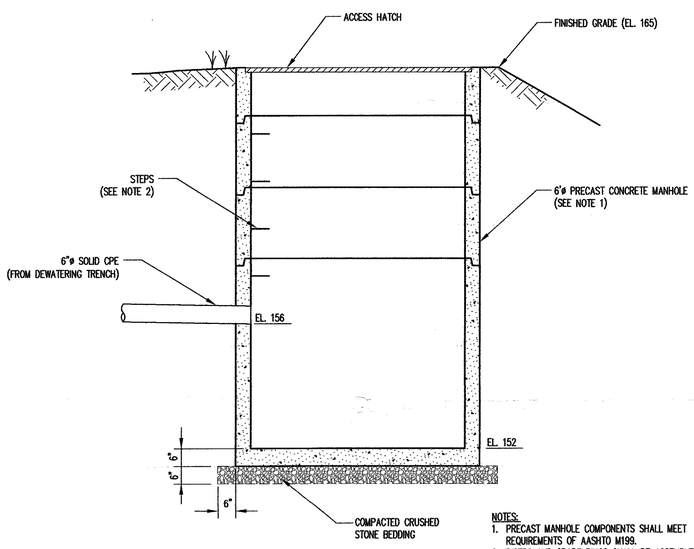

NOTES:
1. PRECAST MANHOLE COMPONENTS SHALL MEET REQUIREMENTS OF AASHTO M199.
2. RISERS AND GRADE RINGS SHALL BE ASSEMBLED SO ALL STEPS WILL HAVE A 16" SPACING THE FULL HEIGHT OF MANHOLE. START FIRST STEP 6" BELOW TOP.

PRECAST CONCRETE MANHOLE

DETAIL 4/CD2
NOT TO SCALE

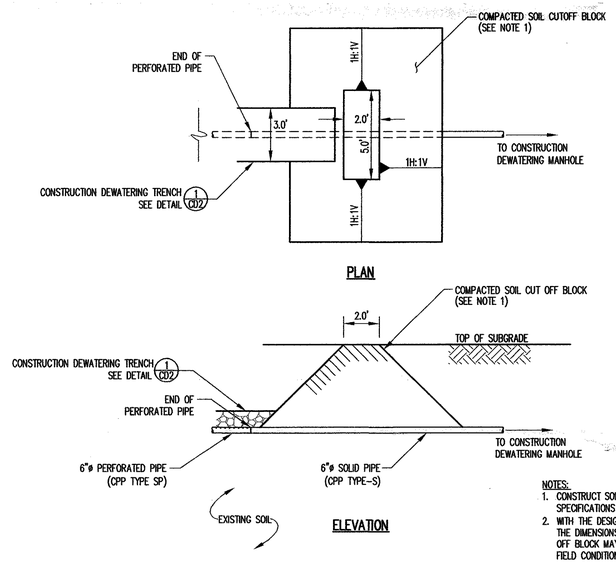

NOTES:
1. CONSTRUCT SOIL CUT OFF BLOCK TO MEET THE SPECIFICATIONS OF THE COMPACTED SOIL LINER.
2. WITH THE DESIGN ENGINEER'S PRIOR APPROVAL, THE DIMENSIONS AND SLOPES OF THE CLAY CUT OFF BLOCK MAY BE ADJUSTED TO ACCOMMODATE FIELD CONDITIONS.

CONSTRUCTION DEWATERING TRENCH TERMINATION

DETAIL 3/CD2
NOT TO SCALE

NO.	DATE	REVISION

RICHARDSON SMITH GARDNER & ASSOCIATES
Engineering and Geological Services
14 N. Boylan Ave.
Raleigh, N.C. 27603
www.rsgengineers.com
ph: 919-828-0577
fax: 919-828-3899

SEAL

PROJECT TITLE:
JOHNSTON COUNTY C&D LANDFILL
AREA 2 - CELL 1
CONSTRUCTION DRAWINGS

DRAWING TITLE:
DETAILS

DESIGNED BY: G.G.M.	DRAWN BY: C.T.J.
CHECKED BY:	PROJECT NO.: JOHN-31
SCALE: AS SHOWN	DATE: APRIL 2007
FILE NAME: JOHN-D0506	
SHEET NO. 2	DRAWING NO. CD2

G:\CAD\Johnston\John-31\sheets\JOHN-D0506.dwg - 4/13/2007 2:34 PM

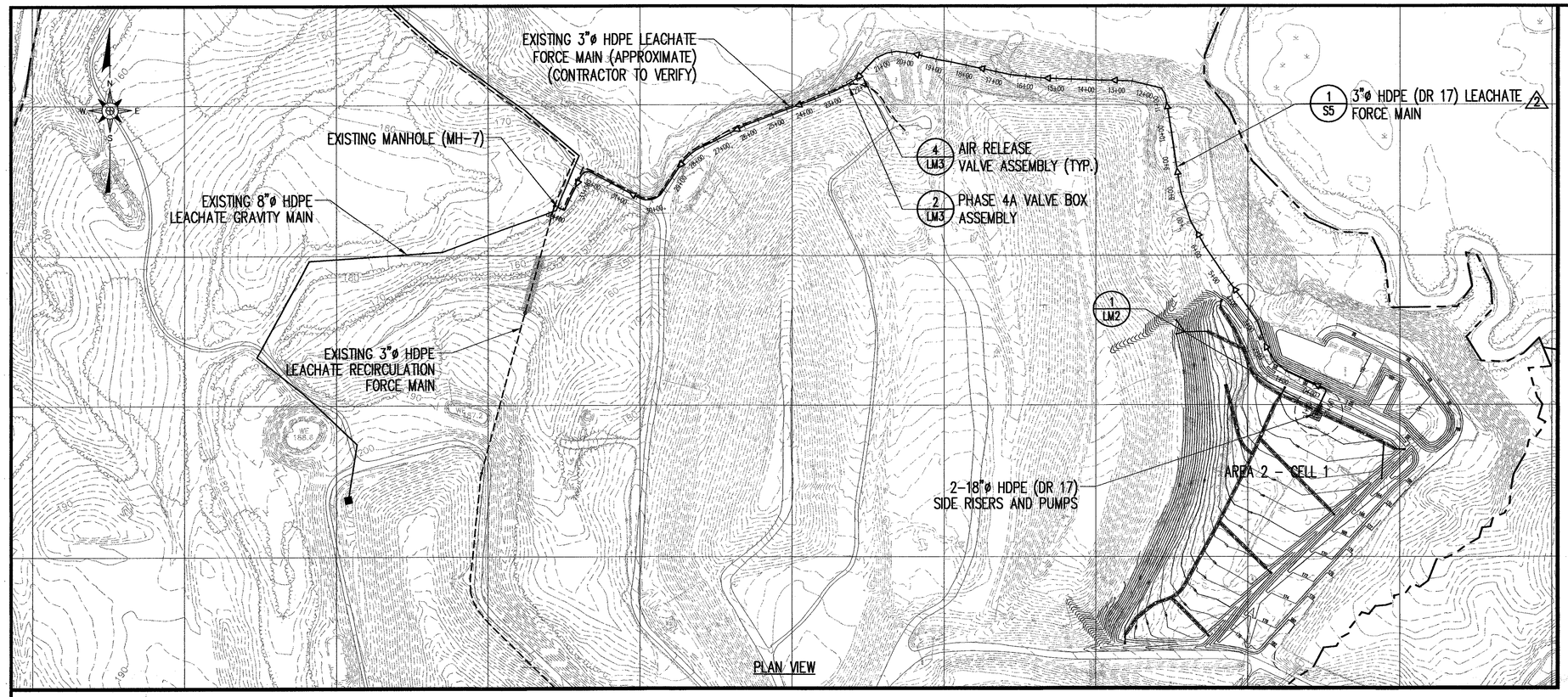

LEGEND

- EXISTING 10' CONTOUR (SEE REFERENCE 1)
- EXISTING 2' CONTOUR
- PROPERTY LINE
- PROPOSED LEACHATE FORCEMAIN
- EXISTING LEACHATE GRAVITY MAIN
- EXISTING LEACHATE FORCEMAIN

REFERENCES

1. OVERALL SITE TOPOGRAPHY PROVIDED BY GEODATA CORPORATION, BASED ON MAY 21, 2004 AERIAL PHOTOGRAPHY. TOPOGRAPHY IN ACTIVE AREAS PROVIDED BY SPECTRUM NC, LLC, BASED ON MARCH 21, 2005 AERIAL PHOTOGRAPHY. TOPOGRAPHY OF PHASE 4 CELL 2 PROVIDED BY 4D SITE SOLUTIONS INC., DATED JUNE 2, 2005. TOPOGRAPHY IN PHASE 5 AREA PROVIDED BY SOUTHWIND SURVEYING AND ENGINEERING, GARNER, NC, DATED JUNE 16, 2003.
2. ASBUILT SUBGRADE ELEVATIONS FROM FIELD SURVEY DATED FEBRUARY 16 & 23, 2007 AND MARCH 16, 2007 BY BATEMAN CIVIL SURVEY COMPANY P.C., HOLLY SPRINGS, NC.

0 200' 400' 600'

DATE	NO.	REVISION
4/13/07	2	REVISED FORCE MAIN ALIGNMENT AND PROFILE

ISSUED FOR CONSTRUCTION

SAFETY NOTE:

THE CONTRACTOR IS SOLELY RESPONSIBLE FOR SITE SAFETY ASSOCIATED WITH THE WORK UNDER THIS CONTRACT AND FOR COMPLIANCE WITH ALL FEDERAL, STATE AND LOCAL HEALTH AND SAFETY LAWS, CODES, REGULATIONS, AND ORDINANCES INCLUDING BUT NOT LIMITED TO THOSE CURRENTLY MANDATED BY THE OCCUPATIONAL SAFETY AND HEALTH ADMINISTRATION (OSHA).

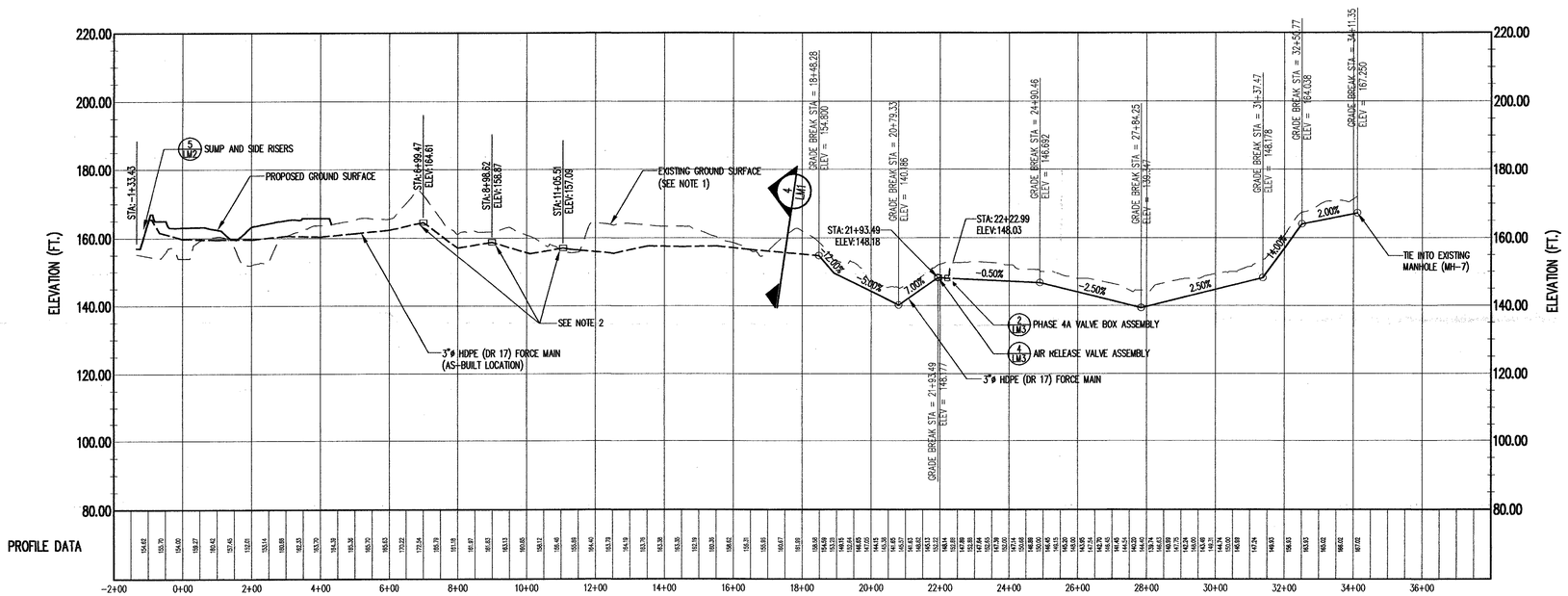

LEACHATE FORCE MAIN LAYOUT

PROFILE 1 S5 2
SCALE: AS SHOWN

NOTES

1. EXISTING GROUND SURFACE OVER AS-BUILT FORCE MAIN LOCATION IS MINIMUM 3-FEET OVER PIPE.
2. TEMPORARY AIR RELEASE VALVES MAY BE REQUIRED BY CONTRACTOR AT THESE LOCALIZED HIGH POINTS DURING PRESSURE TESTING AND INITIAL FILLING OF THE FORCEMAIN.

60' 40' 20' 0

0 200' 400' 600'

RICHARDSON SMITH GARDNER & ASSOCIATES
Engineering and Geological Services
14 N. Boylan Ave. Raleigh, N.C. 27603
www.rsgengineers.com
ph: 919-828-0577 fax: 919-828-3899

Permit No. 51-03

SEAL

PROJECT TITLE: JOHNSTON COUNTY C&D LANDFILL AREA 2 - CELL 1 CONSTRUCTION DRAWINGS

DRAWING TITLE: LEACHATE FORCEMAIN PLAN AND PROFILE

DESIGNED BY: S.A.S.	DRAWN BY: C.T.J.
CHECKED BY:	PROJECT NO.: JOHN-29
SCALE: AS SHOWN	DATE: JUNE 2006
FILE NAME: JOHN-D0447A	
SHEET NO. 6	DRAWING NO. S5

G:\CAD\Johnston\John-29\area 2 Cell 1 Construction\construction issue\rev 041307\sheets\JOHN-D0447A.dwg - 4/13/2007 4:00 PM

ISSUED FOR CONSTRUCTION

SAFETY NOTE:

THE CONTRACTOR IS SOLELY RESPONSIBLE FOR SITE SAFETY ASSOCIATED WITH THE WORK UNDER THIS CONTRACT AND FOR COMPLIANCE WITH ALL FEDERAL, STATE AND LOCAL HEALTH AND SAFETY LAWS, CODES, REGULATIONS, AND ORDINANCES INCLUDING BUT NOT LIMITED TO THOSE CURRENTLY MANDATED BY THE OCCUPATIONAL SAFETY AND HEALTH ADMINISTRATION (OSHA).

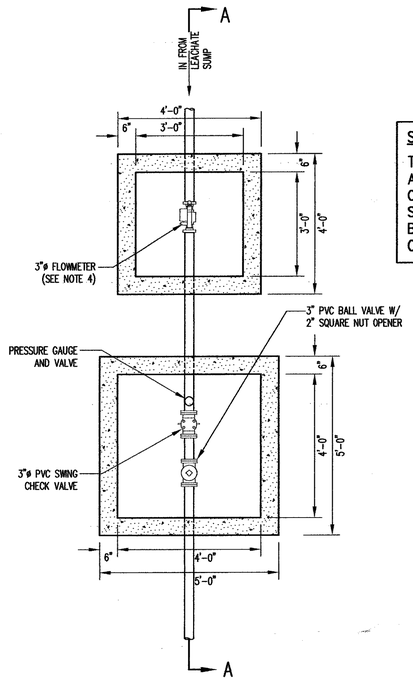

PLAN VIEW

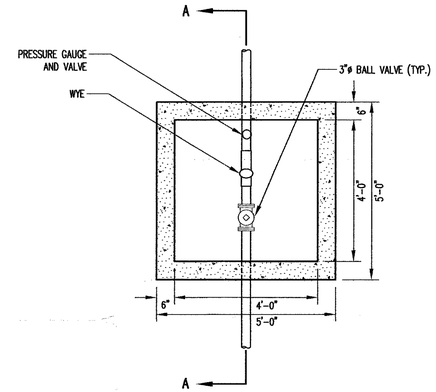

PLAN VIEW

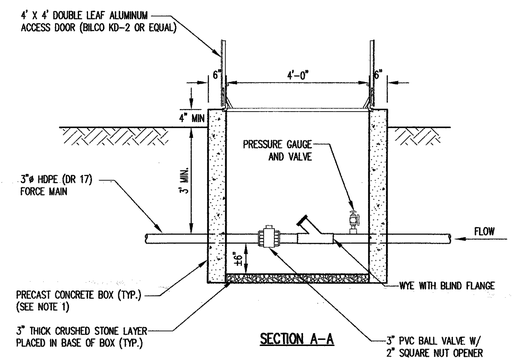

SECTION A-A

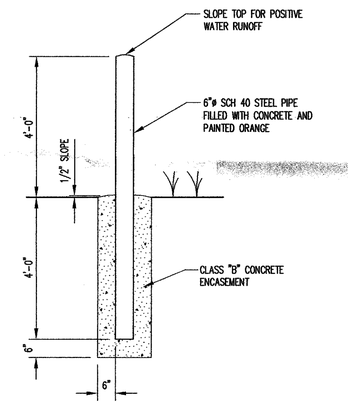

BOLLARD

DETAIL 3 / LM3
SCALE: 1" = 2'

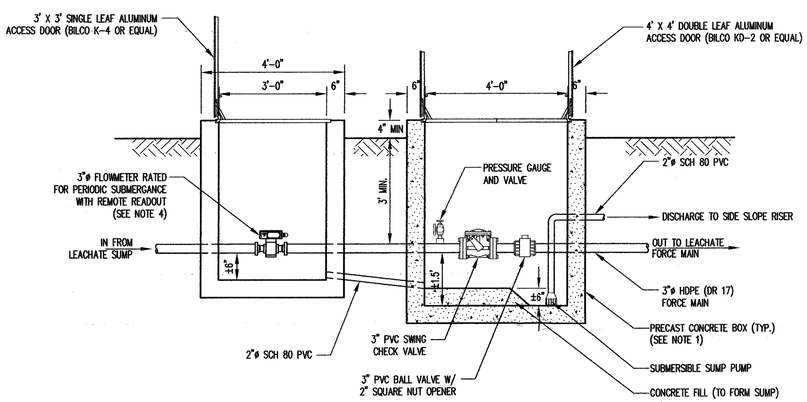

SECTION A-A

NOTES:
1. PRECAST CONCRETE BOXES AND COVERS SHALL CONFORM TO THE FOLLOWING REQUIREMENTS:
   A. CONCRETE: COMPRESSIVE STRENGTH 4,000 PSI
   B. REINFORCING: ASTM A-615, GRADE 60
   C. MEETS H-20 LOADING.
2. CONTRACTOR SHALL PROVIDE CONCRETE THRUST BLOCKING AND VALVE SUPPORTS AS REQUIRED.
3. CONTRACTOR SHALL VERIFY THAT THE SELECTED BOX IS ADEQUATELY SIZED TO FIT THE PROPOSED VALVES AND FITTINGS.
4. FLOWMETER SHALL BE INSTALLED IN PIPE WITH MINIMUM OF 5 PIPE DIAMETERS UNOBSTRUCTED PIPE DOWNSTREAM OF METER AND 10 PIPE DIAMETERS UPSTREAM OF METER.

LEACHATE FORCE MAIN VALVE BOX ASSEMBLY

DETAIL 1 / LM3
SCALE: 1" = 2'

NOTES:
1. PRECAST CONCRETE BOXES AND COVERS SHALL CONFORM TO THE FOLLOWING REQUIREMENTS:
A. CONCRETE: COMPRESSIVE STRENGTH 4,000 PSI
B. REINFORCING: ASTM A-615, GRADE 60
C. MEETS H-20 LOADING.
2. CONTRACTOR SHALL PROVIDE CONCRETE THRUST BLOCKING AND VALVE SUPPORTS AS REQUIRED.
3. CONTRACTOR SHALL VERIFY THAT THE SELECTED BOX IS ADEQUATELY SIZED TO FIT THE PROPOSED VALVES AND FITTINGS.
4. PLACE UP TO FOUR (4) BOLLARDS AROUND COMPLETED STRUCTURE AS DIRECTED BY THE OWNER AND ENGINEER.

PHASE 4A VALVE BOX ASSEMBLY

DETAIL 2 / LM3
SCALE: 1" = 2'

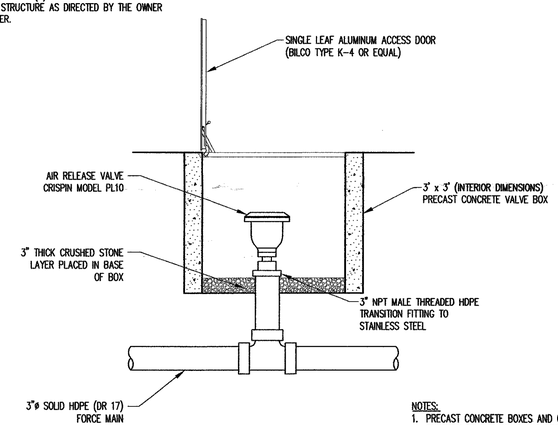

NOTES:
1. PRECAST CONCRETE BOXES AND COVERS SHALL CONFORM TO THE FOLLOWING REQUIREMENTS:
A. CONCRETE: COMPRESSIVE STRENGTH 4,000 PSI
B. REINFORCING: ASTM A-615, GRADE 60
C. MEETS H-20 LOADING.
2. CONTRACTOR SHALL PROVIDE CONCRETE THRUST BLOCKING AND VALVE SUPPORTS AS REQUIRED.
3. CONTRACTOR SHALL VERIFY THAT THE SELECTED BOX IS ADEQUATELY SIZED TO FIT THE PROPOSED VALVES AND FITTINGS.
4. PLACE UP TO FOUR (4) BOLLARDS AROUND COMPLETED STRUCTURE AS DIRECTED BY THE OWNER AND ENGINEER.

AIR RELEASE VALVE ASSEMBLY

DETAIL 4 / LM3 2
NOT TO SCALE

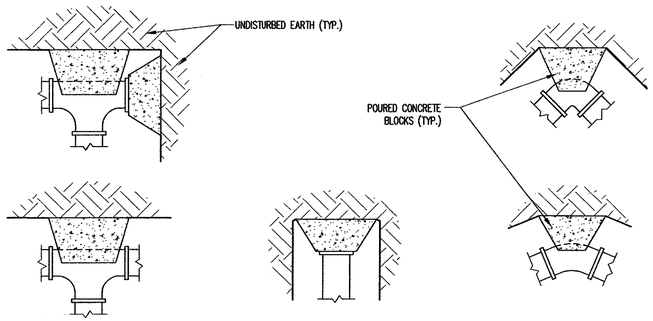

NOTES:
1. THESE DETAILS ARE FOR BOTH VERTICALLY AND HORIZONTALLY LAID PIPE.
2. POURED IN PLACE CONCRETE SHALL BE CLASS B.
3. LEAVE JOINTS CLEAR OF CONCRETE FOR EASY ACCESS.
4. POLYETHYLENE SHALL BE WRAPPED AROUND FITTINGS WHERE CONCRETE BLOCKING WILL EVENTUALLY BE REMOVED.
5. THE CRITICAL CONDITION OF UNDISTURBED EARTH IS ANTICIPATED TO BE SILTY SAND.
6. FITTING FACTORS; 90° – 1.41
   PLUG – 1.00
   45° – 0.77
   22 1/2° – 0.39
   11 1/4° – 0.20

REQUIRED AREA OF BLOCK FACE EARTH BEARING (B) SHALL BE FIGURED AS FOLLOWS WHERE:

B = AREA OF BLOCK FACE (SQ.)
A = AREA OF PIPE DIA. IN SQ. IN.
P = DESIGN WORKING PRESS, PSI.
C = FITTING FACTOR

$$B = \frac{P\ A\ C}{2000}$$

THRUST BLOCKS

DETAIL 5 / LM3
NOT TO SCALE

RICHARDSON SMITH GARDNER & ASSOCIATES
Engineering and Geological Services
14 N. Boylan Ave.
Raleigh, N.C. 27603
ph: 919-828-0577
fax: 919-828-3899
www.rsgengineers.com

NO.	DATE	REVISION
2	4/13/07	REVISED DETAIL 4/LM3

SEAL

PROJECT TITLE: JOHNSTON COUNTY C&D LANDFILL
AREA 2 - CELL 1
CONSTRUCTION DRAWINGS

DRAWING TITLE: LEACHATE MANAGEMENT SYSTEM DETAILS (SHEET 3 OF 3)

DESIGNED BY: P.K.S.	DRAWN BY: J.A.L.
CHECKED BY:	PROJECT NO.: JOHN-29
SCALE: AS SHOWN	DATE: JUNE 2006
FILE NAME: JOHN-D0452A	
SHEET NO. 11	DRAWING NO. LM3

G:\CAD\Johnston\John-29\area 2 Cell 1 Construction\construction issue\rev (04130)\dwgs\JOHNJD0452A.dwg - 4/13/2007 3:59 PM