Division of Waste Management Markup Copy
Johnston Co.
LF

JOHNSTON COUNTY, NORTH CAROLINA
DEPARTMENT OF PUBLIC UTILITIES

JOHNSTON COUNTY C&D LANDFILL
AREA 2
PERMIT DRAWINGS

OCTOBER 2005
REVISED: MARCH 2006

SHEET NO.	DRAWING NO.	DRAWING TITLE	REVISION NO.
1	–	TITLE–COVER SHEET	1
2	S1	EXISTING SITE CONDITIONS	
3	S2	SITE DEVELOPMENT PLAN – BASE GRADES	1
4	S3	SITE DEVELOPMENT PLAN – FINAL COVER GRADES	1
5	S4	AREA 2 SUBGRADE GRADING AND DRAINAGE PLAN	1
6	S5	AREA 2 COMPOSITE LINER GRADING AND LEACHATE COLLECTION SYSTEM	1
7	S6	AREA 2 PROTECTIVE COVER GRADING PLAN	1
8	S7	LEACHATE FORCEMAIN PLAN & PROFILE	1
9	L1	LINER AND BERM DETAILS (SHEET 1 OF 2)	
10	L2	LINER & BERM DETAILS (SHEET 2 OF 2)	
11	LM1	LEACHATE MANAGEMENT SYSTEM DETAILS (SHEET 1 OF 3)	
12	LM2	LEACHATE MANAGEMENT SYSTEM DETAILS (SHEET 2 OF 3)	1
13	LM3	LEACHATE MANAGEMENT SYSTEM DETAILS (SHEET 3 OF 3)	
14	R1	ROADWAY DETAILS	
15	EC1	EROSION & SEDIMENTATION CONTROL DETAILS (SHEET 1 OF 2)	1
16	EC2	EROSION & SEDIMENTATION CONTROL DETAILS (SHEET 2 OF 2)	
17	FC1	AREA 2 FINAL COVER GRADING AND DRAINAGE PLAN	1
18	FC2	FINAL COVER DETAILS (SHEET 1 OF 2)	
19	FC3	FINAL COVER DETAILS (SHEET 2 OF 2)	
20	LFG1	LANDFILL GAS MANAGEMENT DETAILS	
21	X1	AREA 2 – ENGINEERING CROSS SECTION (1 OF 2)	1
22	X2	AREA 2 – ENGINEERING CROSS SECTION (2 OF 2)	1
23	P1	C&D LANDFILL PHASING PLAN	1
24	P2	MSW LANDFILL PHASING PLAN (SHEET 1 OF 2)	
25	P3	MSW LANDFILL PHASING PLAN (SHEET 2 OF 2)	

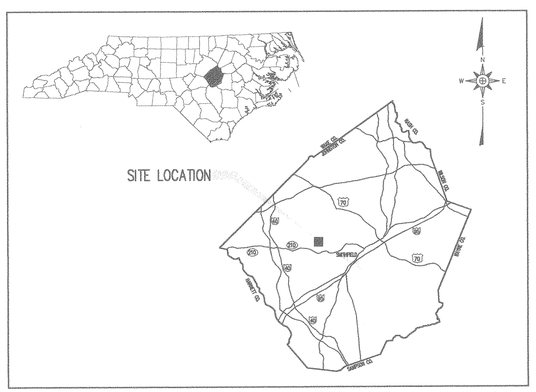

VICINITY MAP
NOT TO SCALE

APPROVED
DIVISION OF WASTE MANAGEMENT
SOLID WASTE SECTION
DATE 31 AUG 06 BY TWYCHE JONES
PTC 51-03 V3 ATTACH 1 PART II DOC 4

G. N. RICHARDSON & ASSOCIATES, INC.
Engineering and Geological Services
14 N. Boylan Ave.
Raleigh, N.C. 27603
www.gnra.com
ph: 919-828-0577
fax: 919-828-3899

SEAL 021688 ENGINEER PIETER K. SCHEER 4/4/06

DATE	NO.	REVISION
3/06	1	SHEET SET REVISION NO. 1 (REFER TO REVISED DRAWINGS)

FILE NAME JOHN-D0354

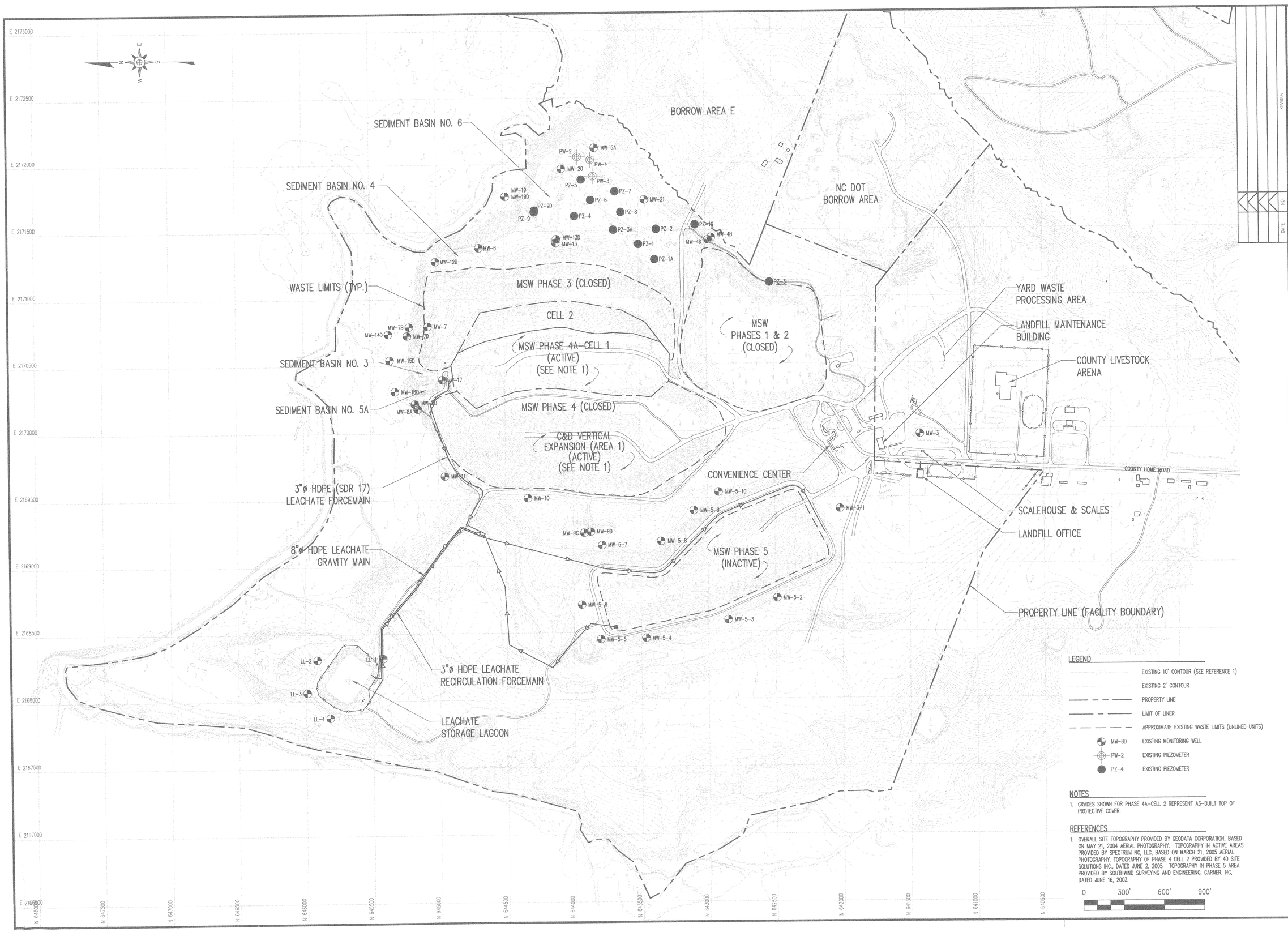

LEGEND

- EXISTING 10' CONTOUR (SEE REFERENCE 1)
- EXISTING 2' CONTOUR
- PROPERTY LINE
- LIMIT OF LINER
- APPROXIMATE EXISTING WASTE LIMITS (UNLINED UNITS)
- MW-8D — EXISTING MONITORING WELL
- PW-2 — EXISTING PIEZOMETER
- PZ-4 — EXISTING PIEZOMETER

NOTES

1. GRADES SHOWN FOR PHASE 4A-CELL 2 REPRESENT AS-BUILT TOP OF PROTECTIVE COVER.

REFERENCES

1. OVERALL SITE TOPOGRAPHY PROVIDED BY GEODATA CORPORATION, BASED ON MAY 21, 2004 AERIAL PHOTOGRAPHY. TOPOGRAPHY IN ACTIVE AREAS PROVIDED BY SPECTRUM NC, LLC, BASED ON MARCH 21, 2005 AERIAL PHOTOGRAPHY. TOPOGRAPHY OF PHASE 4 CELL 2 PROVIDED BY 4D SITE SOLUTIONS INC., DATED JUNE 2, 2005. TOPOGRAPHY IN PHASE 5 AREA PROVIDED BY SOUTHWIND SURVEYING AND ENGINEERING, GARNER, NC, DATED JUNE 16, 2003.

0 300' 600' 900'

REVISION | NO. | DATE

G. N. RICHARDSON & ASSOCIATES, INC.
Engineering and Geological Services
14 N. Boylan Ave.
Raleigh, N.C. 27603
ph: 919-828-0577
fax: 919-828-3899
www.gnra.com

SEAL

PROJECT TITLE: JOHNSTON COUNTY C&D LANDFILL AREA 2 PERMIT DRAWINGS

DRAWING TITLE: EXISTING SITE CONDITIONS

DESIGNED BY: P.K.S.	DRAWN BY: J.A.L.
CHECKED BY:	PROJECT NO.: JOHN-22
SCALE: AS SHOWN	DATE: OCT. 2005
FILE NAME: JOHN-D0356	
SHEET NO. 2	DRAWING NO. S1

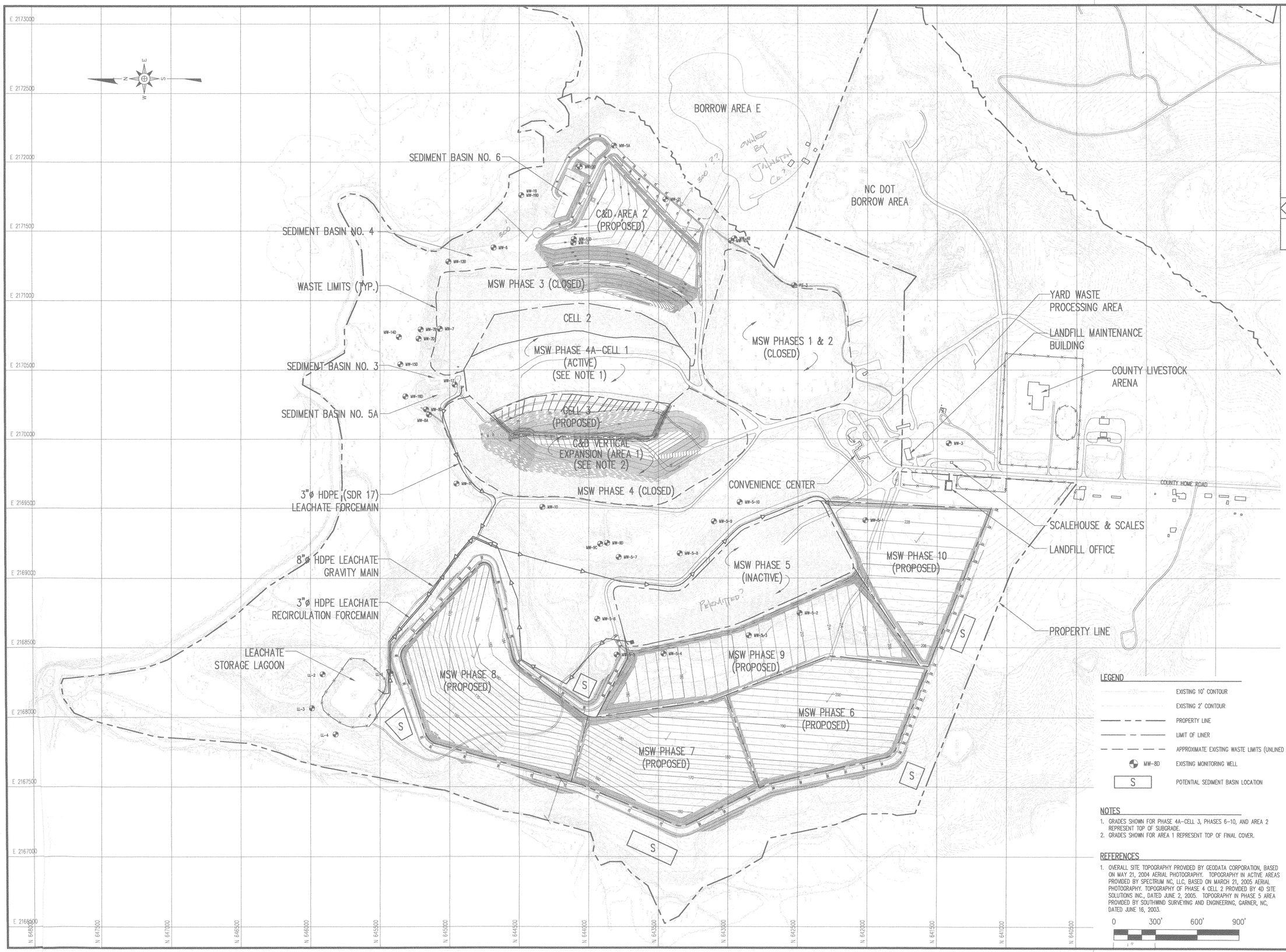

LEGEND

	EXISTING 10' CONTOUR
	EXISTING 2' CONTOUR
	PROPERTY LINE
	LIMIT OF LINER
	APPROXIMATE EXISTING WASTE LIMITS (UNLINED UNITS)
MW-8D	EXISTING MONITORING WELL
S	POTENTIAL SEDIMENT BASIN LOCATION

NOTES

1. GRADES SHOWN FOR PHASE 4A-CELL 3, PHASES 6-10, AND AREA 2 REPRESENT TOP OF SUBGRADE.
2. GRADES SHOWN FOR AREA 1 REPRESENT TOP OF FINAL COVER.

REFERENCES

1. OVERALL SITE TOPOGRAPHY PROVIDED BY GEODATA CORPORATION, BASED ON MAY 21, 2004 AERIAL PHOTOGRAPHY. TOPOGRAPHY IN ACTIVE AREAS PROVIDED BY SPECTRUM NC, LLC, BASED ON MARCH 21, 2005 AERIAL PHOTOGRAPHY. TOPOGRAPHY OF PHASE 4 CELL 2 PROVIDED BY 4D SITE SOLUTIONS INC., DATED JUNE 2, 2005. TOPOGRAPHY IN PHASE 5 AREA PROVIDED BY SOUTHWIND SURVEYING AND ENGINEERING, GARNER, NC, DATED JUNE 16, 2003.

0 300' 600' 900'

NO.	DATE	REVISION
1	3/06	REVISED AREA 2 BASE GRADES

G. N. RICHARDSON & ASSOCIATES, INC.
Engineering and Geological Services
14 N. Boylan Ave.
Raleigh, N.C. 27603
ph: 919-828-0577
fax: 919-828-3899
www.gnra.com

SEAL

PROJECT TITLE: JOHNSTON COUNTY C&D LANDFILL AREA 2 PERMIT DRAWINGS

DRAWING TITLE: SITE DEVELOPMENT PLAN BASE GRADES (MSW AND C&D UNITS)

DESIGNED BY: P.K.S.	DRAWN BY: J.A.L.
CHECKED BY:	PROJECT NO.: JOHN-22
SCALE: AS SHOWN	DATE: OCT. 2005
FILE NAME: JOHN-D0366A	
SHEET NO. 3	DRAWING NO. S2

BORROW AREA E

SEDIMENT BASIN NO. 6

NC DOT BORROW AREA

C&D AREA 2 (PROPOSED)

SEDIMENT BASIN NO. 4

WASTE LIMITS (TYP.)

MSW PHASE 3 (CLOSED)

CELL 2

MSW PHASE 4A CELL 1 (ACTIVE)

MSW PHASES 1 & 2 (CLOSED)

SEDIMENT BASIN NO. 3

SEDIMENT BASIN NO. 5A

CELL 3 (PROPOSED)

C&D VERTICAL EXPANSION (AREA 1) (ACTIVE)

MSW PHASE 4 (CLOSED)

3"ø HDPE (SDR 17) LEACHATE FORCEMAIN

CONVENIENCE CENTER

YARD WASTE PROCESSING AREA

LANDFILL MAINTENANCE BUILDING

COUNTY LIVESTOCK ARENA

COUNTY HOME ROAD

SCALEHOUSE & SCALES

LANDFILL OFFICE

8"ø HDPE LEACHATE GRAVITY MAIN

3"ø HDPE LEACHATE RECIRCULATION FORCEMAIN

MSW PHASE 5 (INACTIVE)

MSW PHASE 10 (PROPOSED)

PROPERTY LINE

LEACHATE STORAGE LAGOON

MSW PHASE 8 (PROPOSED)

MSW PHASE 9 (PROPOSED)

MSW PHASE 6 (PROPOSED)

MSW PHASE 7 (PROPOSED)

S

E 2173000
E 2172500
E 2172000
E 2171500
E 2171000
E 2170500
E 2170000
E 2169500
E 2169000
E 2168500
E 2168000
E 2167500
E 2167000
E 2166500

N 648000
N 647500
N 647000
N 646500
N 646000
N 645500
N 645000
N 644500
N 644000
N 643500
N 643000
N 642500
N 642000
N 641500
N 641000
N 640500

LEGEND

- EXISTING 10' CONTOUR (SEE REFERENCE 1)
- EXISTING 2' CONTOUR
- PROPERTY LINE
- LIMIT OF LINER
- APPROXIMATE EXISTING WASTE LIMITS (UNLINED UNITS)
- MW-8D EXISTING MONITORING WELL
- S POTENTIAL SEDIMENT BASIN LOCATION

REFERENCES

1. OVERALL SITE TOPOGRAPHY PROVIDED BY GEODATA CORPORATION, BASED ON MAY 21, 2004 AERIAL PHOTOGRAPHY. TOPOGRAPHY IN ACTIVE AREAS PROVIDED BY SPECTRUM NC, LLC, BASED ON MARCH 21, 2005 AERIAL PHOTOGRAPHY. TOPOGRAPHY OF PHASE 4 CELL 2 PROVIDED BY 4D SITE SOLUTIONS INC., DATED JUNE 2, 2005. TOPOGRAPHY IN PHASE 5 AREA PROVIDED BY SOUTHWIND SURVEYING AND ENGINEERING, GARNER, NC, DATED JUNE 16, 2003.

0 300' 600' 900'

NO.	DATE	REVISION
1	3/06	REVISED AREA 2 BASE GRADES

G. N. RICHARDSON & ASSOCIATES, INC.
Engineering and Geological Services
14 N. Boylan Ave.
Raleigh, N.C. 27603
ph: 919-828-0577
fax: 919-828-3899
www.gnra.com

SEAL

SEAL

PROJECT TITLE:
JOHNSTON COUNTY C&D LANDFILL
AREA 2
PERMIT DRAWINGS

DRAWING TITLE:
SITE DEVELOPMENT PLAN
FINAL COVER GRADES
(MSW AND C&D UNITS)

DESIGNED BY: P.K.S.	DRAWN BY: J.A.L.
CHECKED BY:	PROJECT NO.: JOHN-22
SCALE: AS SHOWN	DATE: OCT. 2005
FILE NAME: JOHN-D0367A	
SHEET NO. 4	DRAWING NO. S3

G:\CAD\Johnston\John22\rev 2\S3106\sheets\JOHN-D0367A.dwg, 4/4/2006 12:02:42 PM

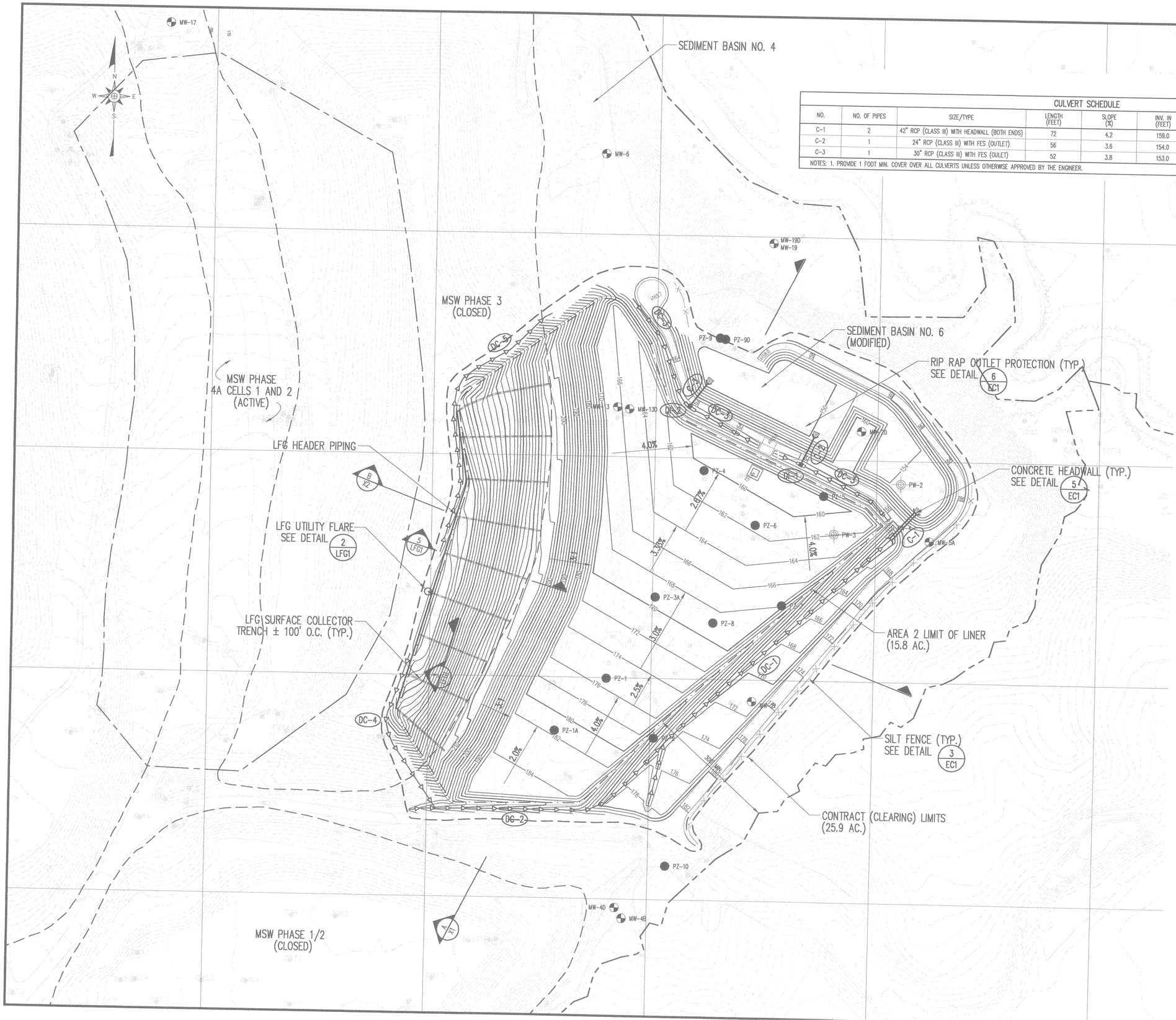

CULVERT SCHEDULE							
NO.	NO. OF PIPES	SIZE/TYPE	LENGTH (FEET)	SLOPE (%)	INV. IN (FEET)	INV. OUT (FEET)	REMARKS
C-1	2	42" RCP (CLASS III) WITH HEADWALL (BOTH ENDS)	72	4.2	159.0	156.0	----
C-2	1	24" RCP (CLASS III) WITH FES (OUTLET)	56	3.6	154.0	152.0	INLET IN DI-1
C-3	1	30" RCP (CLASS III) WITH FES (OULET)	52	3.8	153.0	151.0	INLET IN DI-2

NOTES: 1. PROVIDE 1 FOOT MIN. COVER OVER ALL CULVERTS UNLESS OTHERWSE APPROVED BY THE ENGINEER.

LEGEND

- EXISTING 10' CONTOUR
- EXISTING 2' CONTOUR
- PROPOSED 10' CONTOUR
- PROPOSED 2' CONTOUR
- PROPERTY LINE
- AREA 2 LIMIT OF LINER
- APPROXIMATE EXISTING WASTE LIMITS (UNLINED UNITS)
- MW-8D EXISTING MONITORING WELL
- PW-2 EXISTING PIEZOMETER
- PZ-4 EXISTING PIEZOMETER
- LFG SURFACE COLLECTOR TRENCH/ PERFORATED PIPING
- SOLID PIPING
- LFG UTILITY FLARE
- SILT FENCE
- DC-1 DRAINAGE CHANNEL
- C-1 CULVERT NUMBER
- DI-1 DROP INLET NUMBER

NOTES

1. CONTOURS SHOWN ON PIGGY BACK AREAS MAY VARY SOMEWHAT DUE TO SETTLEMENT OF UNDERLYING WASTE.
2. GRADES SHOWN FOR AREA 2 REPRESENT TOP OF SUBGRADE.

REFERENCES

1. OVERALL SITE TOPOGRAPHY PROVIDED BY GEODATA CORPORATION, BASED ON MAY 21, 2004 AERIAL PHOTOGRAPHY. TOPOGRAPHY IN ACTIVE AREAS PROVIDED BY SPECTRUM NC, LLC, BASED ON MARCH 21, 2005 AERIAL PHOTOGRAPHY. TOPOGRAPHY OF PHASE 4 CELL 2 PROVIDED BY 4D SITE SOLUTIONS INC., DATED JUNE 2, 2005. TOPOGRAPHY IN PHASE 5 AREA PROVIDED BY SOUTHWIND SURVEYING AND ENGINEERING, GARNER, NC, DATED JUNE 16, 2003.

0 100' 200' 300'

NO.	DATE	REVISION
1	3/06	REVISED AREA 2 BASE GRADES

G. N. RICHARDSON & ASSOCIATES, INC.
Engineering and Geological Services
14 N. Boylan Ave.
Raleigh, N.C. 27603
ph: 919-828-0577
fax: 919-828-3899
www.gnra.com

SEAL

SEAL

PROJECT TITLE: JOHNSTON COUNTY C&D LANDFILL
AREA 2
PERMIT DRAWINGS

DRAWING TITLE: AREA 2
SUBGRADE GRADING
AND DRAINAGE PLAN

DESIGNED BY: P.K.S.	DRAWN BY: C.T.J.
CHECKED BY:	PROJECT NO.: JOHN-22
SCALE: AS SHOWN	DATE: OCT. 2005
FILE NAME: JOHN-D0382A	
SHEET NO.	DRAWING NO.

G:\CAD\Johnston\John-22\rev1\33106\sheets\JOHN-D0382A.dwg, 4/4/2006 12:02:57 PM

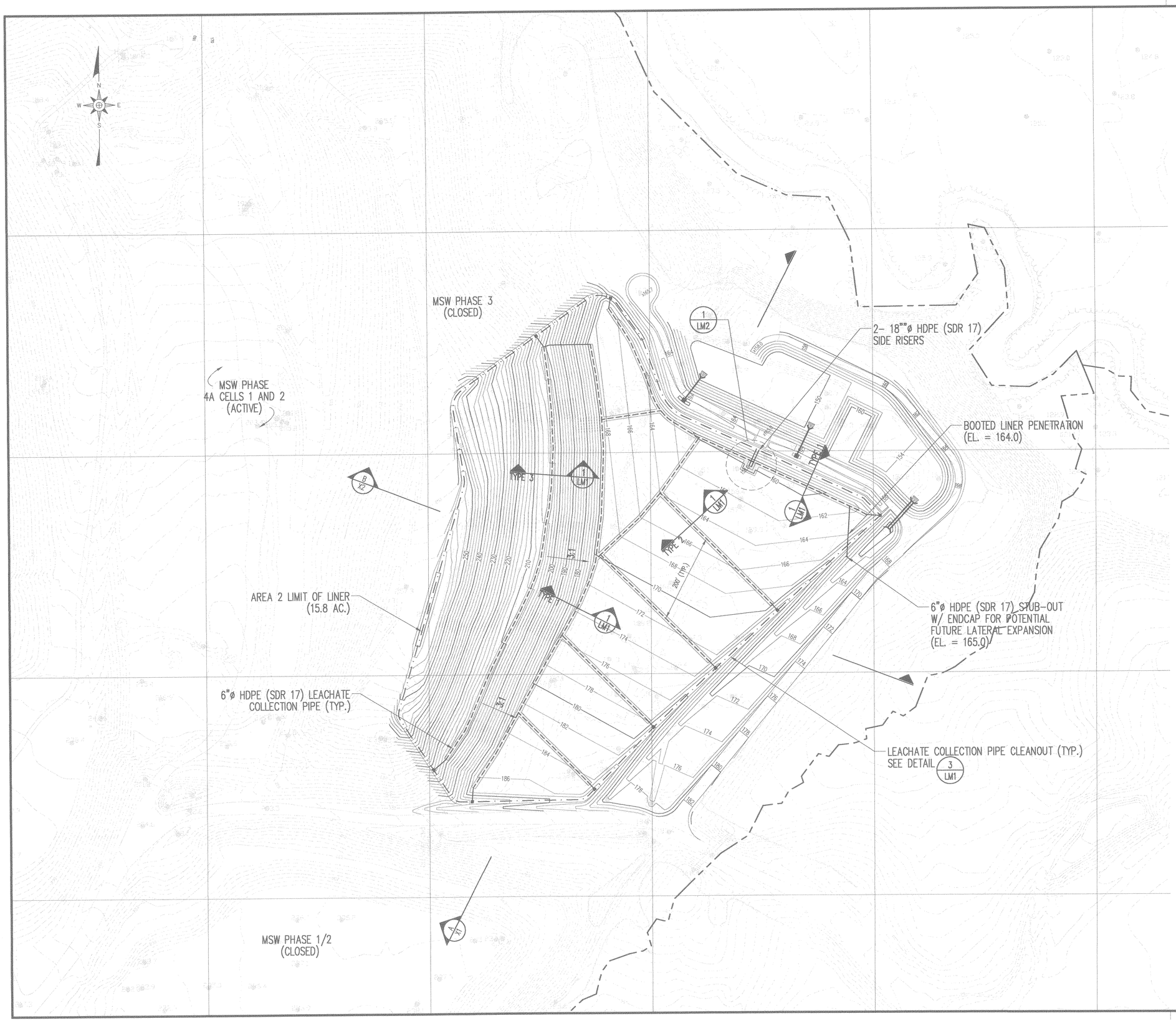

LEGEND

- EXISTING 10' CONTOUR
- EXISTING 2' CONTOUR
- PROPOSED 10' CONTOUR
- PROPOSED 2' CONTOUR
- PROPERTY LINE
- AREA 2 LIMIT OF LINER
- PERFORATED PIPING/ GRAVEL COLUMNS
- SOLID PIPING
- CLEANOUT

NOTES

1. CONTOURS SHOWN ON PIGGY BACK AREAS MAY VARY SOMEWHAT DUE TO SETTLEMENT OF UNDERLYING WASTE.
2. GRADES SHOWN FOR AREA 2 REPRESENT TOP OF COMPACTED SOIL LINER (OR STRUCTURAL FILL).
3. REFER TO DETAILS FOR PROPER TIE IN OF LINER SYSTEM AND PROTECTIVE COVER AROUND THE PERIMETER OF AREA 2.

REFERENCES

1. OVERALL SITE TOPOGRAPHY PROVIDED BY GEODATA CORPORATION, BASED ON MAY 21, 2004 AERIAL PHOTOGRAPHY. TOPOGRAPHY IN ACTIVE AREAS PROVIDED BY SPECTRUM NC, LLC, BASED ON MARCH 21, 2005 AERIAL PHOTOGRAPHY. TOPOGRAPHY OF PHASE 4 CELL 2 PROVIDED BY 4D SITE SOLUTIONS INC., DATED JUNE 2, 2005. TOPOGRAPHY IN PHASE 5 AREA PROVIDED BY SOUTHWIND SURVEYING AND ENGINEERING, GARNER, NC, DATED JUNE 16, 2003.

0 100' 200' 300'

NO.	DATE	REVISION
1	3/06	REVISED AREA 2 BASE GRADES

G. N. RICHARDSON & ASSOCIATES, INC.
Engineering and Geological Services
14 N. Boylan Ave.
Raleigh, N.C. 27603
ph: 919-828-0577
fax: 919-828-3899
www.gnra.com

SEAL

PROJECT TITLE: JOHNSTON COUNTY C&D LANDFILL
AREA 2
PERMIT DRAWINGS

DRAWING TITLE: AREA 2
COMPOSITE LINER GRADING
AND LEACHATE COLLECTION
SYSTEM PLAN

DESIGNED BY: P.K.S.	DRAWN BY: C.T.J.
CHECKED BY:	PROJECT NO.: JOHN-22
SCALE: AS SHOWN	DATE: OCT. 2005
FILE NAME: JOHN-D0397A	
SHEET NO. 6	DRAWING NO. S5

G:\CADJohnston\John-22\rev 03\106\sheets\JOHN-D0397A.dwg, 4/4/2006 12:03:10 PM

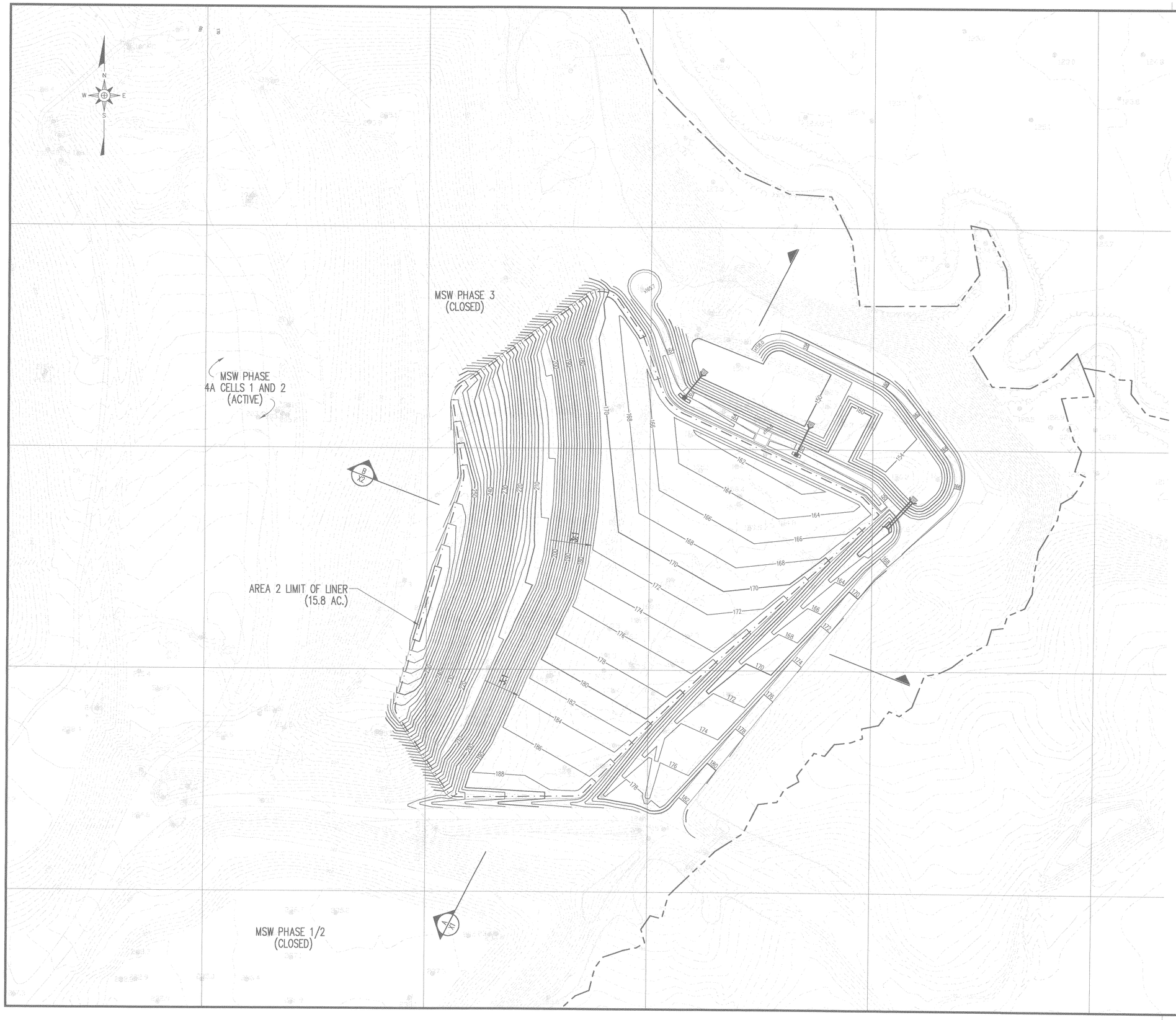

LEGEND

- EXISTING 10' CONTOUR
- EXISTING 2' CONTOUR
- 150 PROPOSED 10' CONTOUR
- PROPOSED 2' CONTOUR
- PROPERTY LINE
- AREA 2 LIMIT OF LINER

NOTES

1. CONTOURS SHOWN ON PIGGY BACK AREAS MAY VARY SOMEWHAT DUE TO SETTLEMENT OF UNDERLYING WASTE.
2. GRADES SHOWN FOR AREA 2 REPRESENT TOP OF PROTECTIVE COVER.
3. REFER TO DETAILS FOR PROPER TIE IN OF LINER SYSTEM AND PROTECTIVE COVER AROUND THE PERIMETER OF AREA 2.

REFERENCES

1. OVERALL SITE TOPOGRAPHY PROVIDED BY GEODATA CORPORATION, BASED ON MAY 21, 2004 AERIAL PHOTOGRAPHY. TOPOGRAPHY IN ACTIVE AREAS PROVIDED BY SPECTRUM NC, LLC, BASED ON MARCH 21, 2005 AERIAL PHOTOGRAPHY. TOPOGRAPHY OF PHASE 4 CELL 2 PROVIDED BY 4D SITE SOLUTIONS INC., DATED JUNE 2, 2005. TOPOGRAPHY IN PHASE 5 AREA PROVIDED BY SOUTHWIND SURVEYING AND ENGINEERING, GARNER, NC, DATED JUNE 16, 2003.

0 100' 200' 300'

NO.	DATE	REVISION
1	3/06	REVISED AREA 2 BASE GRADES

G. N. RICHARDSON & ASSOCIATES, INC.
Engineering and Geological Services
14 N. Boylan Ave.
Raleigh, N.C. 27603
www.gnra.com
ph: 919-828-0577
fax: 919-828-3899

SEAL

PROJECT TITLE:
JOHNSTON COUNTY C&D LANDFILL
AREA 2
PERMIT DRAWINGS

DRAWING TITLE:
AREA 2
PROTECTIVE COVER
GRADING PLAN

DESIGNED BY: P.K.S.	DRAWN BY: J.A.L.
CHECKED BY:	PROJECT NO.: JOHN-22
SCALE: AS SHOWN	DATE: OCT. 2005
FILE NAME: JOHN-D0399A	
SHEET NO. 7	DRAWING NO. S6

G:\CAD-johnston\John-22\rev 03\106-sheets\JOHN-D0399A.dwg, 4/4/2006 12:09:20 PM

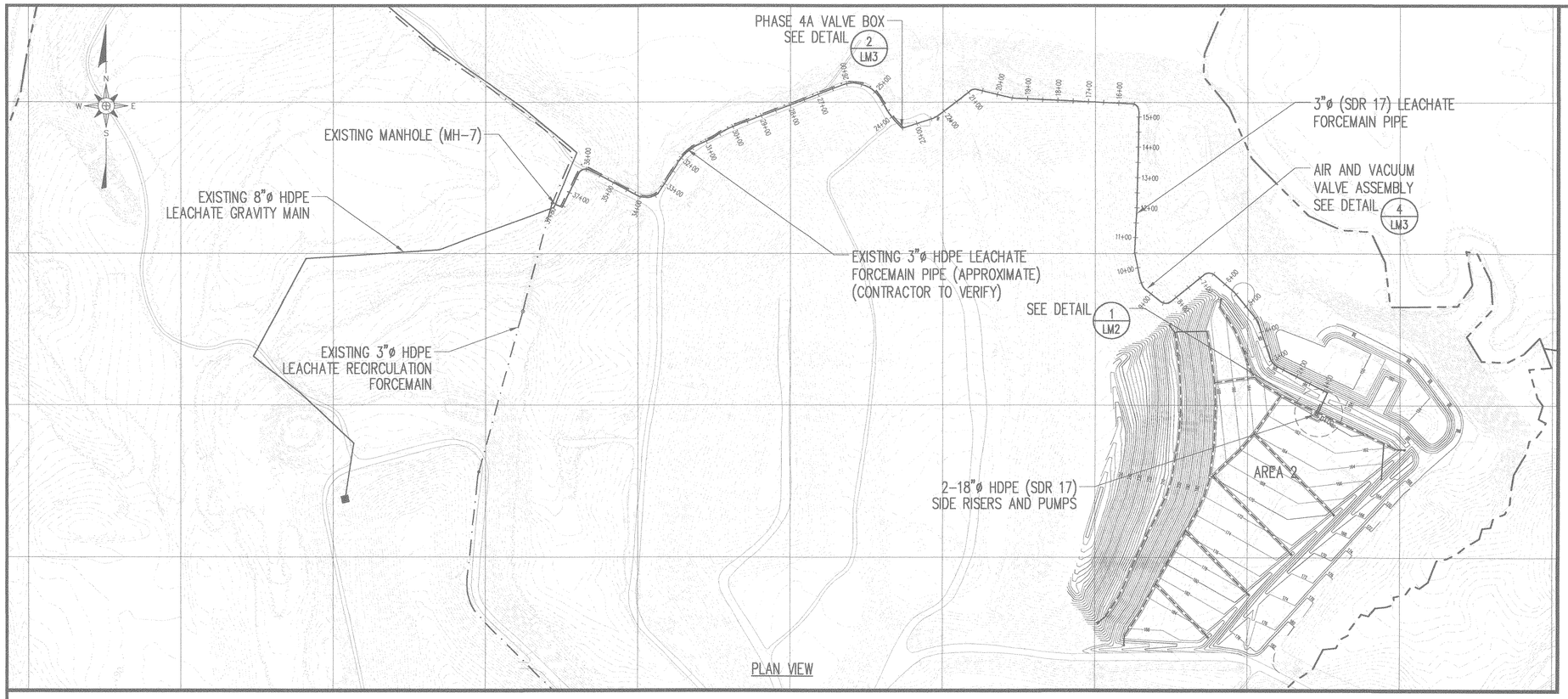

PLAN VIEW

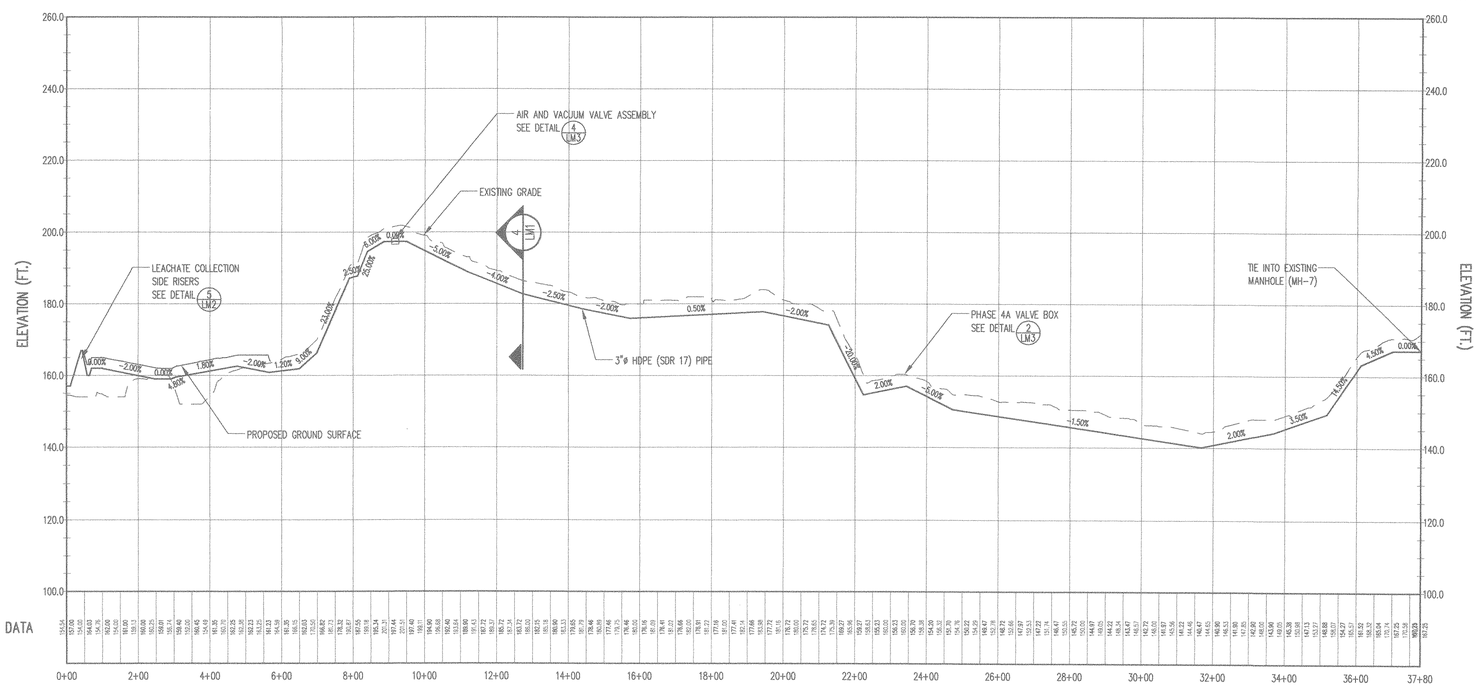

PROFILE

LEGEND

- EXISTING 10' CONTOUR (SEE REFERENCE 1)
- EXISTING 2' CONTOUR
- PROPERTY LINE
- PROPOSED LEACHATE FORCEMAIN
- EXISTING LEACHATE GRAVITY MAIN
- EXISTING LEACHATE FORCEMAIN

REFERENCES

1. OVERALL SITE TOPOGRAPHY PROVIDED BY GEODATA CORPORATION, BASED ON MAY 21, 2004 AERIAL PHOTOGRAPHY. TOPOGRAPHY IN ACTIVE AREAS PROVIDED BY SPECTRUM NC, LLC, BASED ON MARCH 21, 2005 AERIAL PHOTOGRAPHY. TOPOGRAPHY OF PHASE 4 CELL 2 PROVIDED BY 4D SITE SOLUTIONS INC., DATED JUNE 2, 2005. TOPOGRAPHY IN PHASE 5 AREA PROVIDED BY SOUTHWIND SURVEYING AND ENGINEERING, GARNER, NC, DATED JUNE 16, 2003.

0 200' 400' 600'

NO.	DATE	REVISION
	3/06	REVISED AREA 2 BASE GRADES

G. N. RICHARDSON & ASSOCIATES, INC.
Engineering and Geological Services
14 N. Boylan Ave.
Raleigh, N.C. 27603
ph: 919-828-0577
fax: 919-828-3899
www.gnra.com

SEAL

SEAL

PROJECT TITLE: JOHNSTON COUNTY C&D LANDFILL
AREA 2
PERMIT DRAWINGS

DRAWING TITLE: LEACHATE FORCEMAIN
PLAN & PROFILE

DESIGNED BY: P.K.S.	DRAWN BY: J.A.L.
CHECKED BY:	PROJECT NO.: JOHN-22
SCALE: AS SHOWN	DATE: OCT. 2005
FILE NAME: JOHN-D0390A	
SHEET NO.: 8	DRAWING NO.: S7

60' 40' 20' 0

0 200' 400' 600'

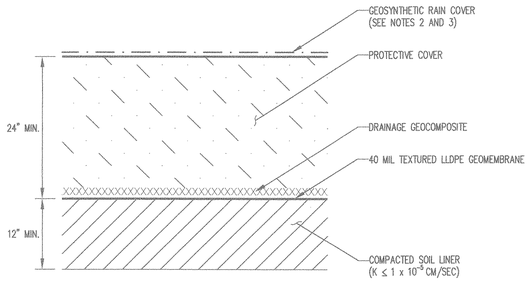

TYPE 1
(SEE NOTE 1)

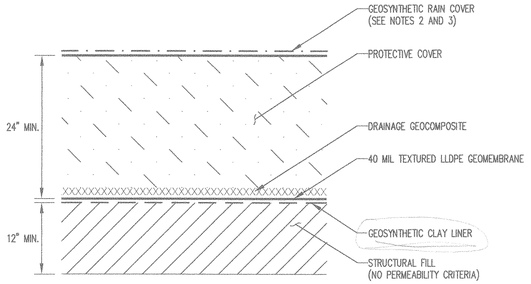

TYPE 2

NOTES:
1. THE TYPE 1 LINER SYSTEM IS ASSUMED IN THE PROJECT DETAILS.
2. THE GEOSYNTHETIC RAIN COVER IS TO BE INSTALLED AT THE OWNERS OPTION.
3. OPERATIONS:
PRIOR TO THE PLACEMENT OF WASTE, THE OWNER SHALL REMOVE ALL GEOSYNTHETIC RAIN COVER FROM THE AREA TO BE USED.

TYPICAL LINER AND LEACHATE COLLECTION SYSTEM CROSS SECTIONS

DETAIL 1/L1
SCALE: 1"= 1'

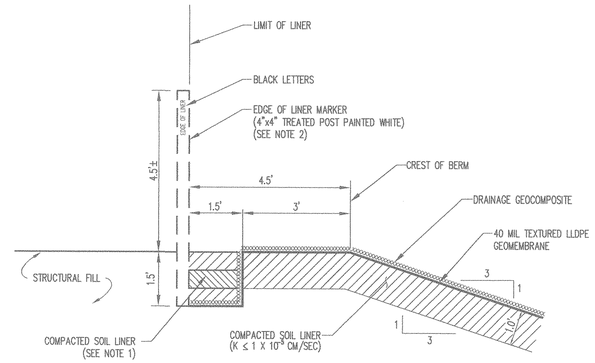

NOTES:
1. BACKFILL ANCHOR TRENCH IN 6"-DEEP LIFTS.
2. PLACE EDGE OF LINER MARKERS EVERY 100' ON-CENTER AND AT BREAK POINTS.
3. SOME LAYERS NOT SHOW FOR CLARITY.

ANCHOR TRENCH

DETAIL 3/L1
SCALE: 1"= 2'

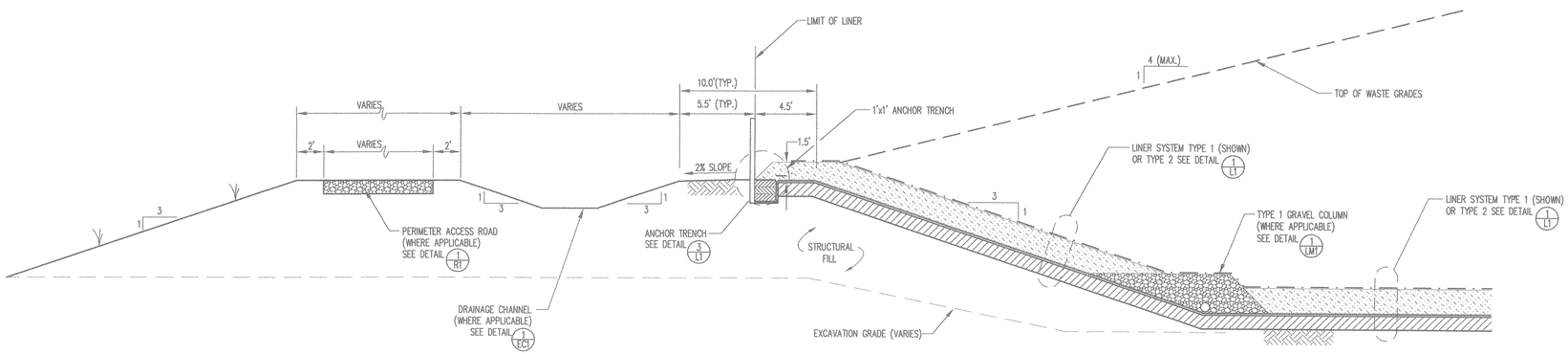

PERIMETER BERM CROSS-SECTION (TYP.)

DETAIL 2/L1
SCALE: 1"= 5'

G. N. RICHARDSON & ASSOCIATES, INC.
Engineering and Geological Services
14 N. Boylan Ave.
Raleigh, N.C. 27603
www.gnra.com
ph: 919-828-0577
fax: 919-828-3899

REVISION | NO. | DATE

SEAL

SEAL

PROJECT TITLE:
JOHNSTON COUNTY C&D LANDFILL
AREA 2
PERMIT DRAWINGS

DRAWING TITLE:
LINER AND BERM DETAILS
(SHEET 1 OF 2)

DESIGNED BY: P.K.S.	DRAWN BY: J.A.L.
CHECKED BY:	PROJECT NO.: JOHN-22
SCALE: AS SHOWN	DATE: OCT. 2005
FILE NAME: JOHN-D0355	
SHEET NO. 9	DRAWING NO. L1

G:\CAD\Johnston\John-22\sheets\JOHN-D0355.dwg, 10/4/2005 5:40:42 PM

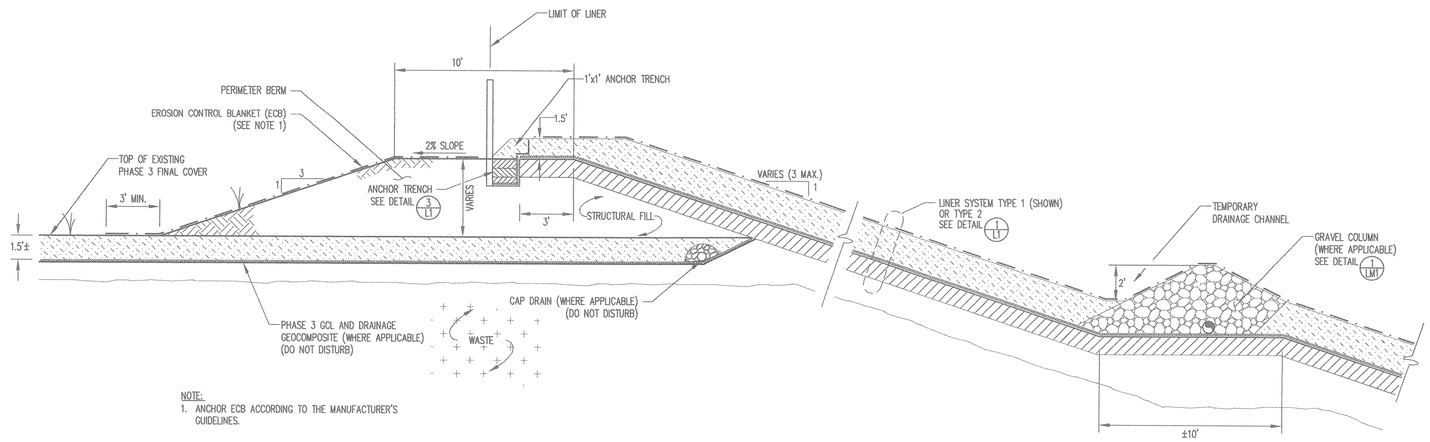

NOTE:
1. ANCHOR ECB ACCORDING TO THE MANUFACTURER'S GUIDELINES.

TYPICAL CROSS SECTION ALONG SLOPE

DETAIL 1/L2
SCALE: 1" = 4'

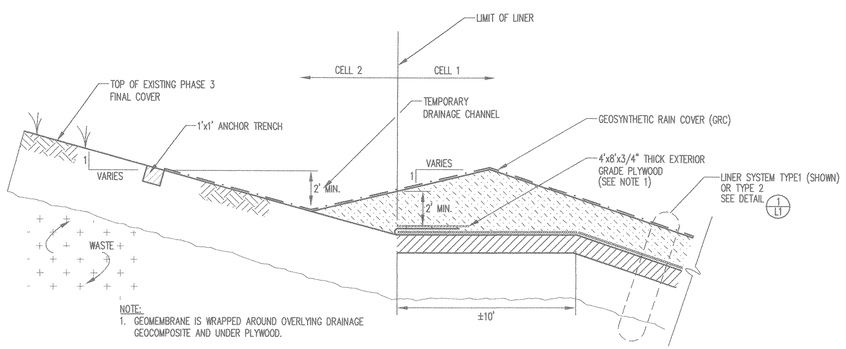

NOTE:
1. GEOMEMBRANE IS WRAPPED AROUND OVERLYING DRAINAGE GEOCOMPOSITE AND UNDER PLYWOOD.

CELL 1/ CELL 2 LINER TERMINATION

DETAIL 3/L2
SCALE: 1" = 4'

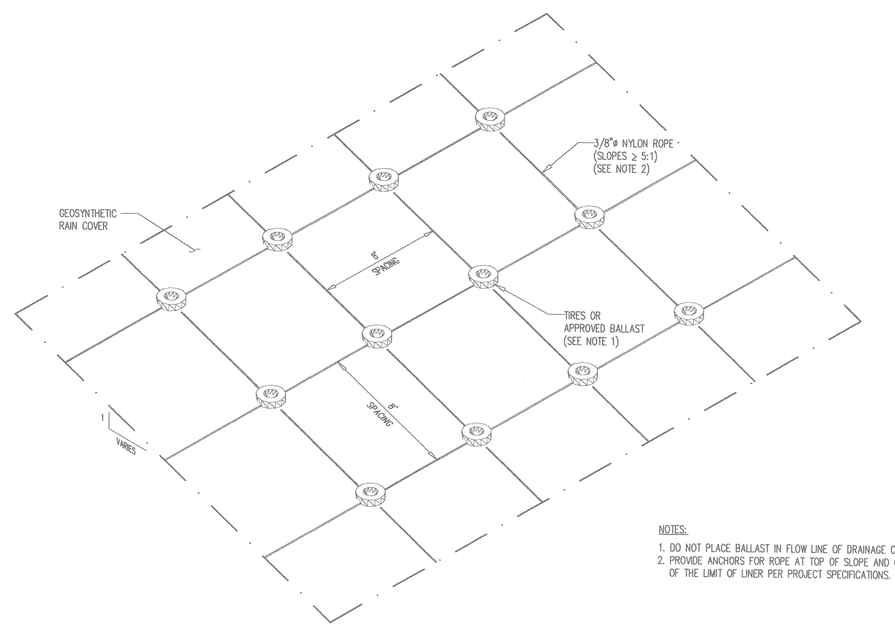

NOTES:
1. DO NOT PLACE BALLAST IN FLOW LINE OF DRAINAGE CHANNEL.
2. PROVIDE ANCHORS FOR ROPE AT TOP OF SLOPE AND OUTSIDE OF THE LIMIT OF LINER PER PROJECT SPECIFICATIONS.

ANCHORAGE OF GEOSYNTHETIC RAIN COVER

DETAIL 2/L2
NOT TO SCALE

NO.	DATE	REVISION

G. N. RICHARDSON & ASSOCIATES, INC.
Engineering and Geological Services
14 N. Boylan Ave.
Raleigh, N.C. 27603
ph: 919-828-0577
fax: 919-828-3899
www.gnra.com

SEAL

SEAL

PROJECT TITLE: JOHNSTON COUNTY C&D LANDFILL
AREA 2
PERMIT DRAWINGS

DRAWING TITLE: LINER AND BERM DETAILS
(SHEET 2 OF 2)

DESIGNED BY: P.K.S.	DRAWN BY: J.A.L.
CHECKED BY:	PROJECT NO.: JOHN-22
SCALE: AS SHOWN	DATE: OCT. 2005
FILE NAME: JOHN-D0357	
SHEET NO. 10	DRAWING NO. L2

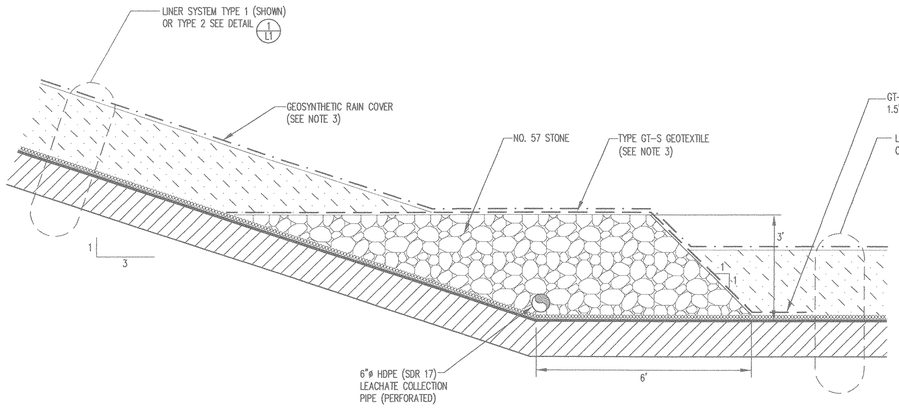

TYPE 1

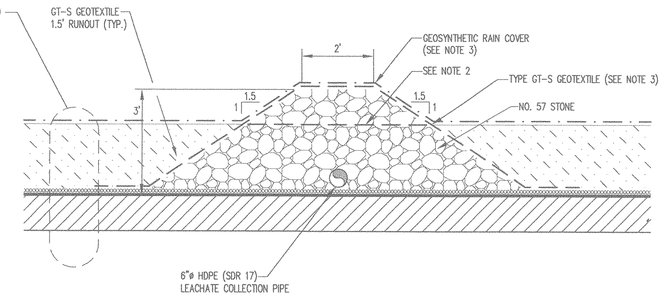

TYPE 2

NOTES:
1. SEE DETAIL 2/LM1 FOR PIPE PERFORATIONS.
2. AT THE LOW END OF TYPE 2 AND TYPE 3 GRAVEL COLUMNS, LEAVE 5 TO 10 FEET FLUSH WITH THE TOP OF PROTECTIVE COVER TO ALLOW STORM WATER TO FLOW TO THE LOW END OF THE CELL.
3. OPERATIONS:
PRIOR TO ACTIVATION OF AN AREA DRAINING TO A PARTICULAR GRAVEL COLUMN, OR PORTION THEREOF, THE OWNER SHALL REMOVE ALL GEOSYNTHETIC RAIN COVER FROM THE AREA TO BE ACTIVATED, INCLUDING FROM GRAVEL COLUMNS. SUBSEQUENTLY, THE EXPOSED TYPE GT-S GEOTEXTILE SHALL BE REMOVED PRIOR TO THE PLACEMENT OF WASTE OVER THAT PORTION OF OF THE GRAVEL COLUMN.

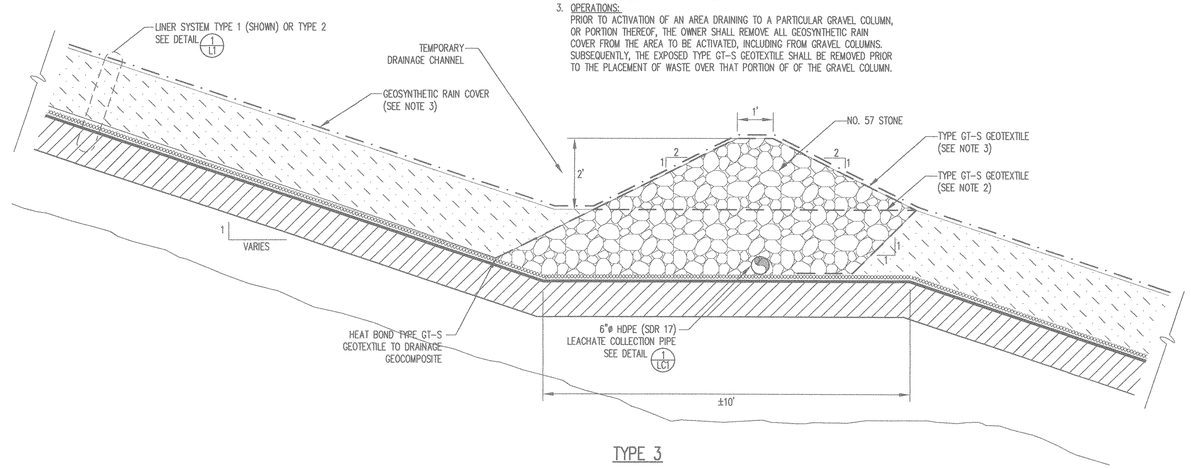

TYPE 3

GRAVEL COLUMN CROSS SECTIONS

DETAIL 1/LM1
SCALE: 1" = 2'

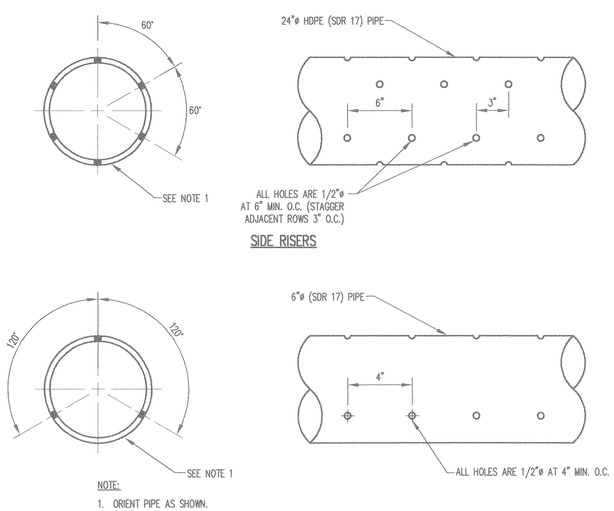

NOTE:
1. ORIENT PIPE AS SHOWN.

LEACHATE COLLECTION PIPING

HDPE PIPE PERFORATIONS

DETAIL 2/LM1
NOT TO SCALE

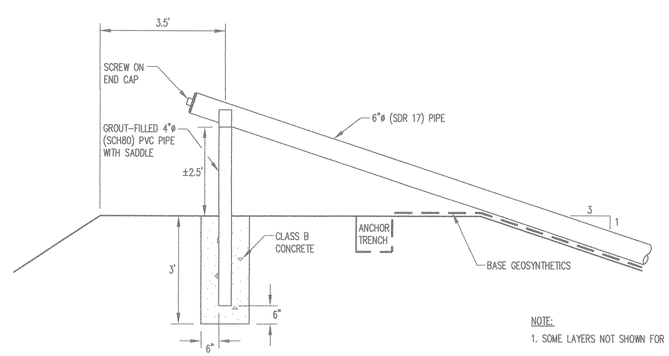

NOTE:
1. SOME LAYERS NOT SHOWN FOR CLARITY.

LEACHATE COLLECTION CLEANOUT

DETAIL 3/LM1
SCALE: 1" = 2'

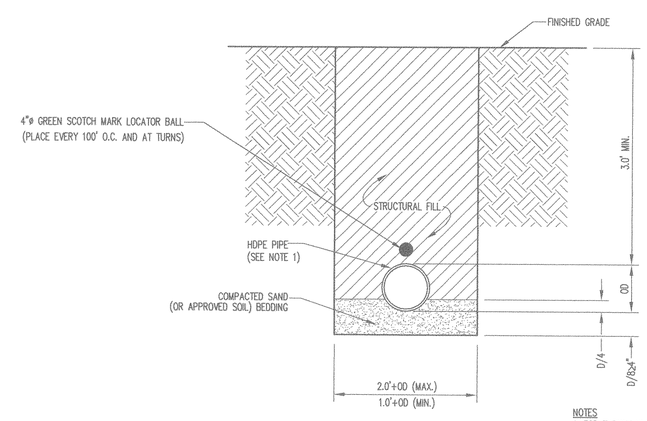

NOTES
1. FOR THRUST BLOCKING OF PRESSURE PIPE, SEE DETAIL 6/LM3

HDPE PIPE BEDDING

DETAIL 4/LM1
1" = 1.0'

NO.	DATE	REVISION

G. N. RICHARDSON & ASSOCIATES, INC.
Engineering and Geological Services
14 N. Boylan Ave. Raleigh, N.C. 27603
ph: 919-828-0577
fax: 919-828-3899
www.gnra.com

SEAL

PROJECT TITLE: JOHNSTON COUNTY C&D LANDFILL AREA 2 PERMIT DRAWINGS

DRAWING TITLE: LEACHATE MANAGEMENT SYSTEM DETAILS (SHEET 1 OF 3)

DESIGNED BY: P.K.S.	DRAWN BY: J.A.L.
CHECKED BY:	PROJECT NO.: JOHN-22
SCALE: AS SHOWN	DATE: OCT. 2005
FILE NAME: JOHN-D0372	
SHEET NO. 11	DRAWING NO. LM1

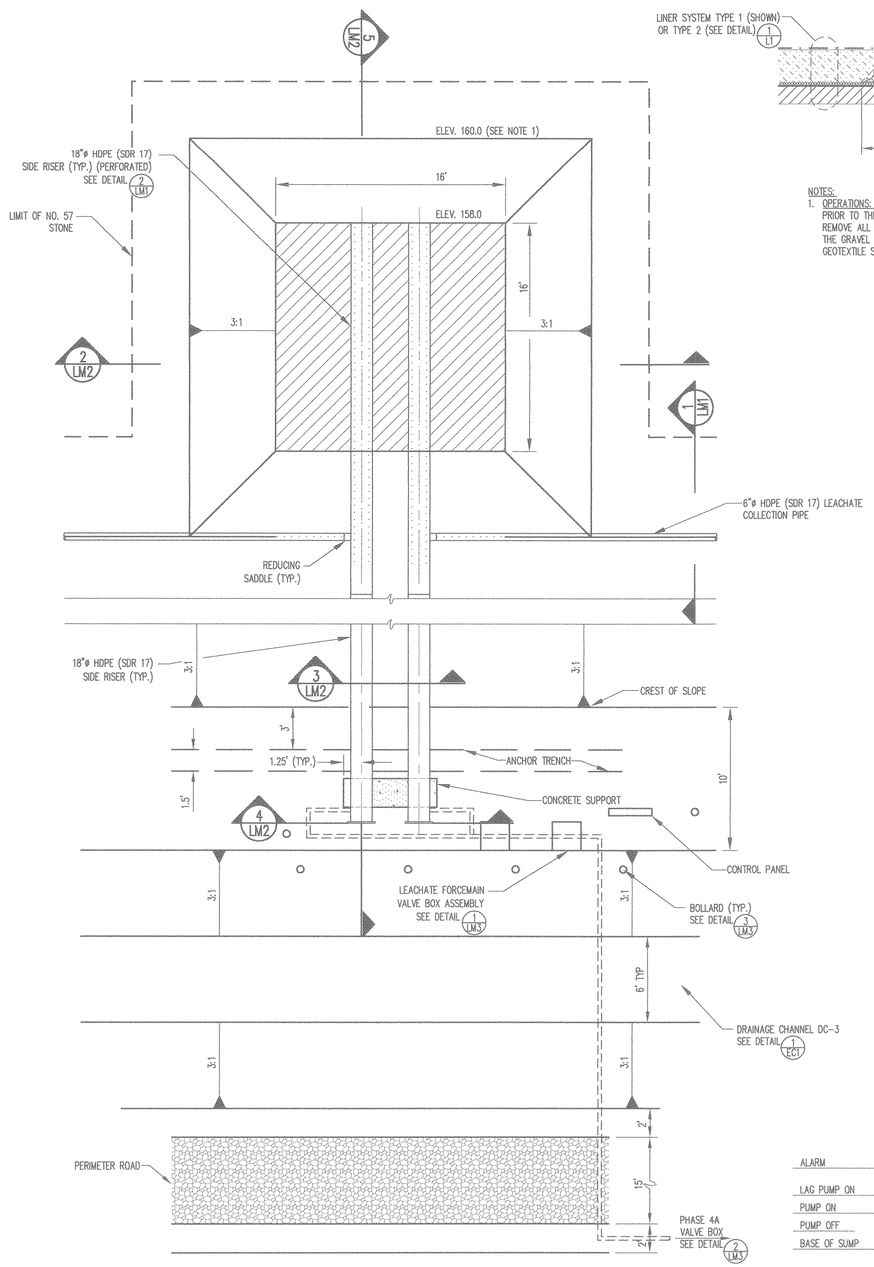

TYPICAL LEACHATE SUMP/ CLEANOUT – PLAN VIEW

DETAIL 1/LM2 SCALE: 1" = 5'

NOTES:
1. ELEVATIONS SHOWN REPRESENT TOP OF COMPACTED SOIL LINER (OR STRUCTURAL FILL).
2. PUMP CONTOLS TO BE PLACED AS DIRECTED BY OWNER.

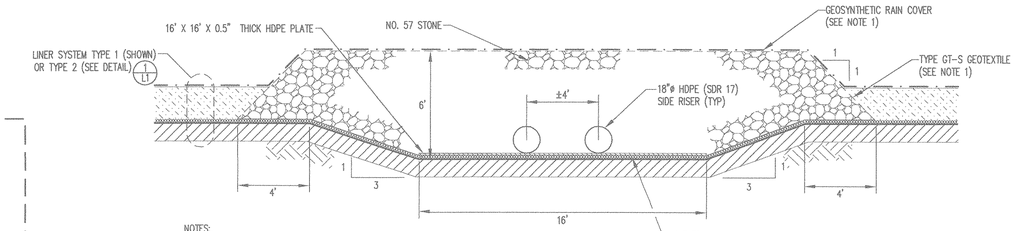

NOTES:
1. OPERATIONS:
PRIOR TO THE ACTIVATION OF THE AREA ADJACENT TO THE SUMP, THE OWNER SHALL REMOVE ALL GEOSYNTHETIC RAIN COVER FROM THE AREA TO BE ACTIVATED, INCLUDING FROM THE GRAVEL LAYER OVERLYING THE SUMP. SUBSEQUENTLY, THE EXPOSED TYPE GT-S GEOTEXTILE SHALL BE REMOVED PRIOR TO THE PLACEMENT OF WASTE OVER THE SUMP.

LEACHATE SUMP – TYPICAL CROSS SECTION

DETAIL 2/LM2 SCALE: 1" = 4'

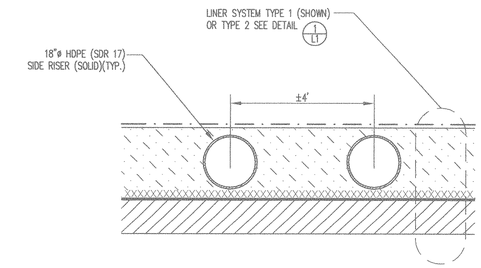

LEACHATE SUMP – TYPICAL CROSS SECTION OF SIDE RISER PIPES ON SLOPE

DETAIL 3/LM2 SCALE: 1" = 2'

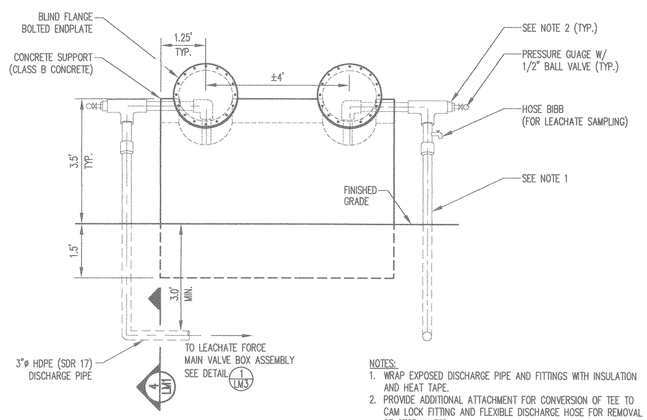

NOTES:
1. WRAP EXPOSED DISCHARGE PIPE AND FITTINGS WITH INSULATION AND HEAT TAPE.
2. PROVIDE ADDITIONAL ATTACHMENT FOR CONVERSION OF TEE TO CAM LOCK FITTING AND FLEXIBLE DISCHARGE HOSE FOR REMOVAL OF STORMWATER.

SIDE RISER – FRONT VIEW

DETAIL 4/LM2 SCALE: 1" = 2'

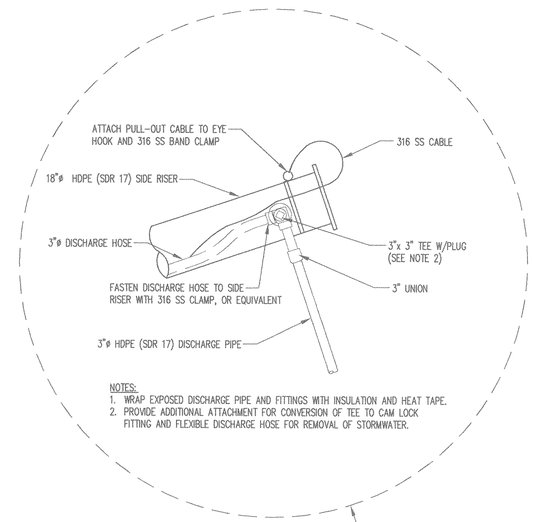

NOTES:
1. WRAP EXPOSED DISCHARGE PIPE AND FITTINGS WITH INSULATION AND HEAT TAPE.
2. PROVIDE ADDITIONAL ATTACHMENT FOR CONVERSION OF TEE TO CAM LOCK FITTING AND FLEXIBLE DISCHARGE HOSE FOR REMOVAL OF STORMWATER.

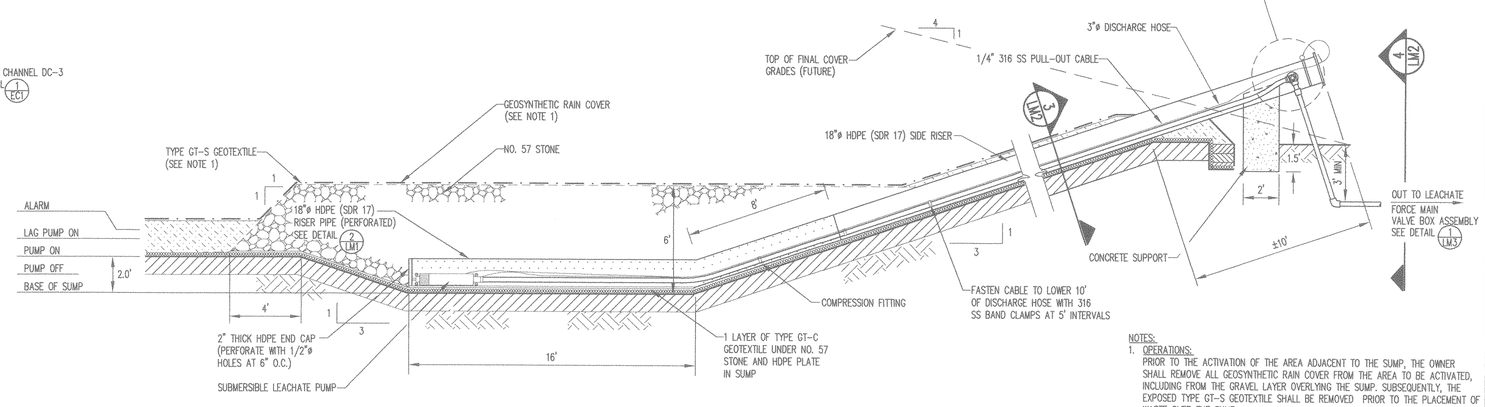

NOTES:
1. OPERATIONS:
PRIOR TO THE ACTIVATION OF THE AREA ADJACENT TO THE SUMP, THE OWNER SHALL REMOVE ALL GEOSYNTHETIC RAIN COVER FROM THE AREA TO BE ACTIVATED, INCLUDING FROM THE GRAVEL LAYER OVERLYING THE SUMP. SUBSEQUENTLY, THE EXPOSED TYPE GT-S GEOTEXTILE SHALL BE REMOVED PRIOR TO THE PLACEMENT OF WASTE OVER THE SUMP.

LEACHATE SUMP – SECTION THROUGH LEACHATE COLLECTION SIDE RISER

DETAIL 5/LM2 SCALE: 1" = 4'

NO.	DATE	REVISION
	3/06	REVISED SUMP ELEVATIONS, MODIFIED DETAILS 1-5/LM2

G. N. RICHARDSON & ASSOCIATES, INC.
Engineering and Geological Services
14 N. Boylan Ave.
Raleigh, N.C. 27603
ph: 919-828-0577
fax: 919-828-3899
www.gnra.com

SEAL

PROJECT TITLE: JOHNSTON COUNTY C&D LANDFILL AREA 2 PERMIT DRAWINGS

DRAWING TITLE: LEACHATE MANAGEMENT SYSTEM DETAILS (SHEET 2 OF 3)

DESIGNED BY: P.K.S.	DRAWN BY: J.A.L.
CHECKED BY:	PROJECT NO.: JOHN-22
SCALE: AS SHOWN	DATE: OCT. 2005
FILE NAME: JOHN-D0371A	
SHEET NO. 12	DRAWING NO. LM2

G:\CAD\Johnston\John-22\mr 03310\drawing\JOHN-D0371A.dwg, 4/4/2006 12:23:13 PM

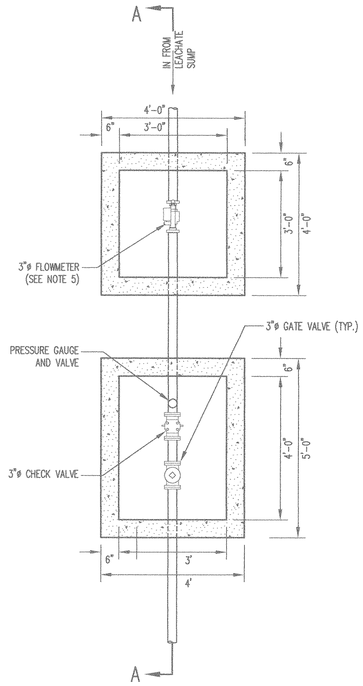

PLAN VIEW

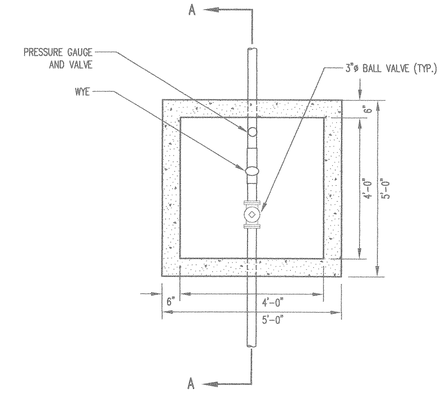

PLAN VIEW

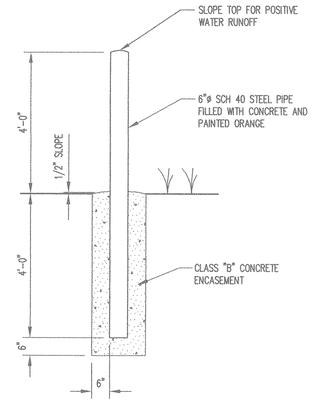

BOLLARD

DETAIL 3/LM3
NOT TO SCALE

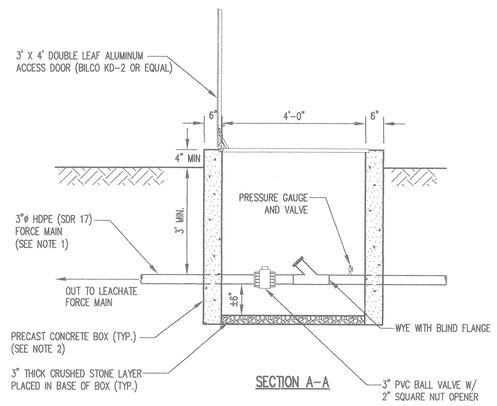

SECTION A-A

PHASE 4A VALVE BOX

DETAIL 2/LM3
SCALE: 1"= 2'

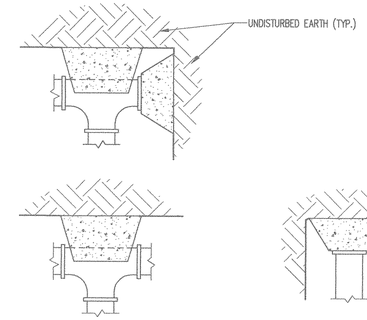

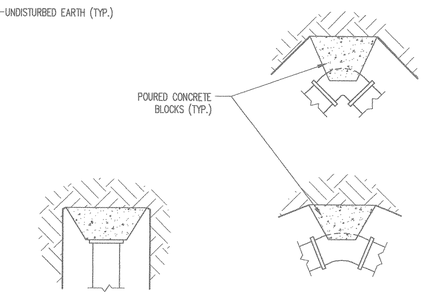

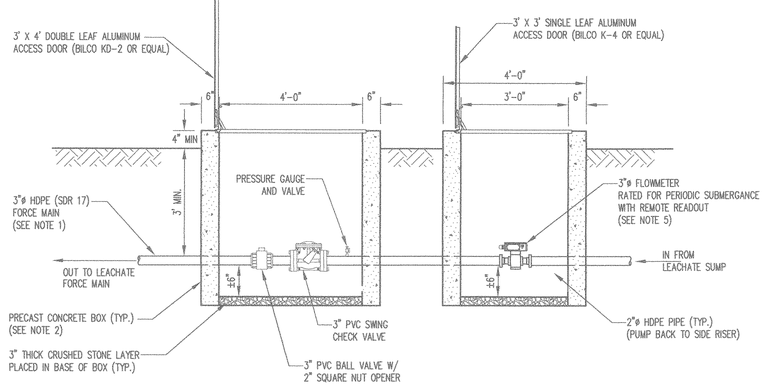

SECTION A-A

LEACHATE FORCEMAIN VALVE BOX ASSEMBLY

DETAIL 1/LM3
SCALE: 1"= 2'

NOTES:
1. PROVIDE WATERTIGHT JOINTS ON ALL PIPING.
2. PRECAST CONCRETE BOXES AND COVERS SHALL CONFORM TO THE FOLLOWING REQUIREMENTS:
   A. CONCRETE: COMPRESSIVE STRENGTH 4,000 PSI
   B. REINFORCING: ASTM A-615, GRADE 60
   C. MEETS H-20 LOADING.
3. CONTRACTOR SHALL PROVIDE CONCRETE THRUST BLOCKING AND VALVE SUPPORTS AS REQUIRED.
4. THE STORMWATER DISCHARGE PIPE IS TO BE USED TO DISCHARGE STORMWATER INFILTRATION FROM THE LEACHATE COLLECTION SYSTEM PRIOR TO THE PLACEMENT OF ANY WASTE.
5. FLOWMETER SHALL BE INSTALLED IN PIPE WITH MINIMUM OF 5 PIPE DIAMETERS UNOBSTRUCTED PIPE DOWNSTREAM OF METER AND 10 PIPE DIAMETERS UPSTREAM OF METER.
6. CONTRACTOR SHALL VERIFY THAT THE SELECTED BOX IS ADEQUATELY SIZED TO FIT THE PROPOSED VALVES AND FITTINGS.

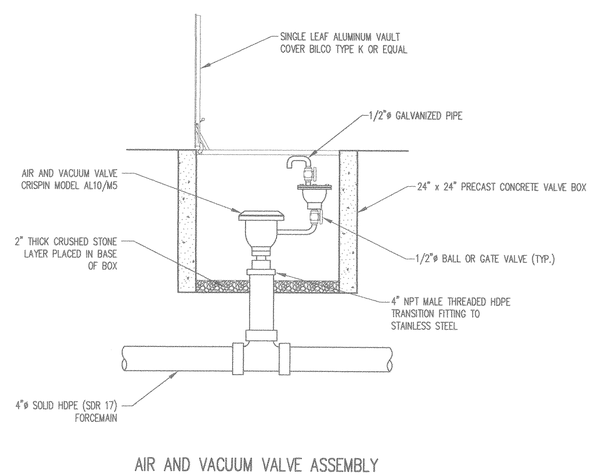

AIR AND VACUUM VALVE ASSEMBLY

DETAIL 4/LM3
NOT TO SCALE

NOTES:
1. THESE DETAILS ARE FOR BOTH VERTICALLY AND HORIZONTALLY LAID PIPE.
2. POURED IN PLACE CONCRETE SHALL BE CLASS B.
3. LEAVE JOINTS CLEAR OF CONCRETE FOR EASY ACCESS.
4. POLYETHYLENE SHALL BE WRAPPED AROUND FITTINGS WHERE CONCRETE BLOCKING WILL EVENTUALLY BE REMOVED.
5. THE CRITICAL CONDITION OF UNDISTURBED EARTH IS ANTICIPATED TO BE SILTY SAND.
6. FITTING FACTORS; 90° – 1.41
   PLUG – 1.00
   45° – 0.77
   22 1/2° – 0.39
   11 1/4° – 0.20

REQUIRED AREA OF BLOCK FACE EARTH BEARING (B) SHALL BE FIGURED AS FOLLOWS WHERE:

B = AREA OF BLOCK FACE (ST.)
A = AREA OF PIPE DIA. IN SQ. IN.
P = DESIGN WORKING PRESS, PSI.
C = FITTING FACTOR
$B = \frac{P \cdot A \cdot C}{2000}$

THRUST BLOCKS

DETAIL 5/LM3
NOT TO SCALE

REVISION	NO.	DATE

G. N. RICHARDSON & ASSOCIATES, INC.
Engineering and Geological Services
14 N. Boylan Ave.
Raleigh, N.C. 27603
ph: 919-828-0577
fax: 919-828-3899
www.gnra.com

SEAL

PROJECT TITLE: JOHNSTON COUNTY C&D LANDFILL
AREA 2
PERMIT DRAWINGS

DRAWING TITLE: LEACHATE MANAGEMENT SYSTEM DETAILS (SHEET 3 OF 3)

DESIGNED BY: P.K.S.	DRAWN BY: J.A.L.
CHECKED BY:	PROJECT NO.: JOHN-22
SCALE: AS SHOWN	DATE: OCT. 2005
FILE NAME: JOHN-D0361	
SHEET NO. 13	DRAWING NO. LM3

G:\CAD\Johnston\John-22\sheets\JOHN-D0361.dwg, 12/7/2005 3:13:46 PM

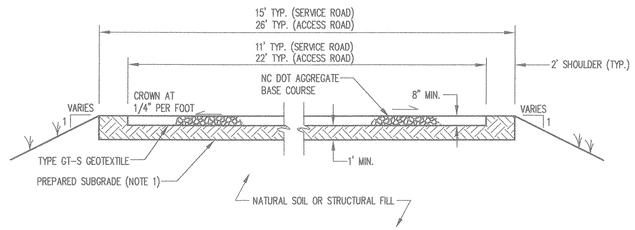

NOTE:
1. IN FILL AREAS, PREPARED SUBGRADE IS EQUIVALENT TO STRUCTURAL FILL. FOR CUT AREAS, REMOVE AND REPLACE WITH STRUCTURAL FILL (SEE PROJECT SPECIFICATIONS).

TYPICAL ROADWAY CROSS SECTION

DETAIL 1/R1
SCALE: 1" = 5'

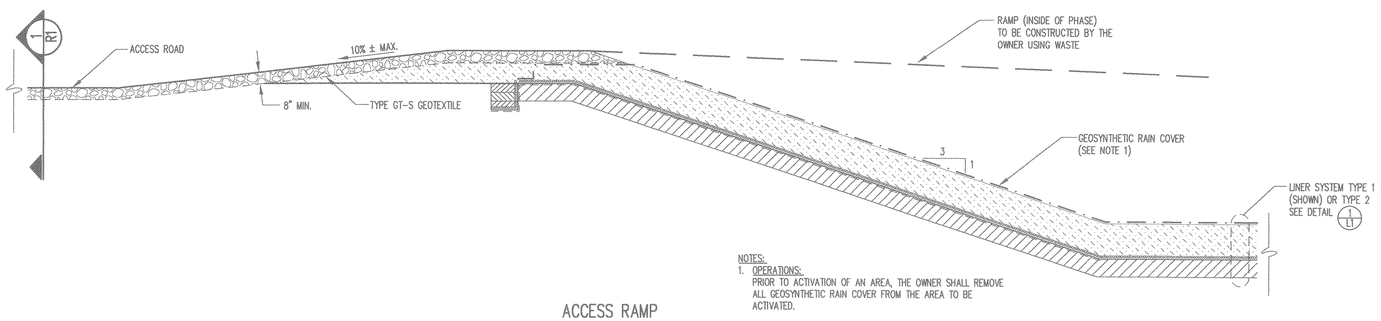

NOTES:
1. OPERATIONS:
PRIOR TO ACTIVATION OF AN AREA, THE OWNER SHALL REMOVE ALL GEOSYNTHETIC RAIN COVER FROM THE AREA TO BE ACTIVATED.

ACCESS RAMP

DETAIL 2/R1
SCALE: 1" = 4'

NO.	DATE	REVISION

G. N. RICHARDSON & ASSOCIATES, INC.
Engineering and Geological Services
14 N. Boylan Ave.
Raleigh, N.C. 27603
ph: 919-828-0577
fax: 919-828-3899
www.gnra.com

SEAL

SEAL
SEAL 021685
ENGINEER
PIETER K. STEYN
9/8/05

PROJECT TITLE:
JOHNSTON COUNTY C&D LANDFILL
AREA 2
PERMIT DRAWINGS

DRAWING TITLE:
ROADWAY DETAILS

DESIGNED BY: P.K.S.	DRAWN BY: J.A.L.
CHECKED BY:	PROJECT NO.: JOHN-22
SCALE: AS SHOWN	DATE: OCT. 2005
FILE NAME: JOHN-00387	
SHEET NO. 14	DRAWING NO. R1

DRAINAGE CHANNEL SCHEDULE						
DRAINAGE CHANNEL	LINING	B (FEET)	D (FEET)	M	D_{50} (INCHES)	X (FEET)
DC-1	RIP RAP	8.0	2.0	3	9	1.5
DC-2	RIP RAP	6.0	2.0	3	6	1.0
DC-3	TRM*	6.0	2.0	3	----	----
DC-4A	TRM*	4.0	1.5	3	----	----
DC-4B	RIP RAP	4.0	1.5	3	9	1.5
DC-5A	TRM*	4.0	1.5	3	----	----
DC-5B	RIP RAP	6.0	1.5	3	12	2.0

*TRM = TURF REINFORCEMENT MATTING

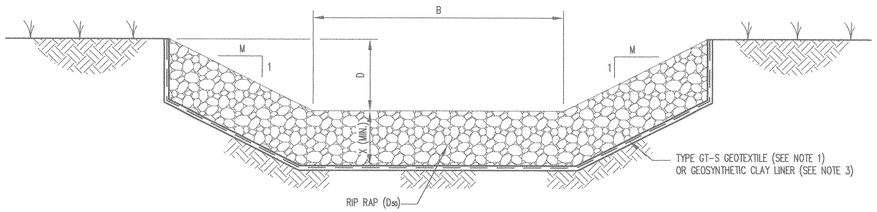

RIP RAP LINED CHANNELS

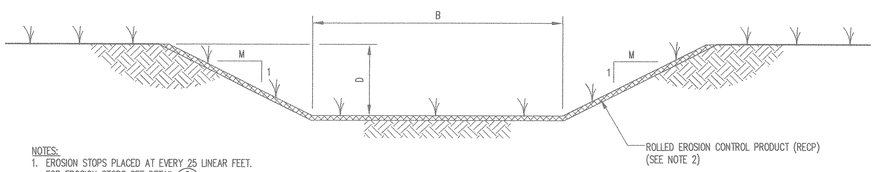

RECP LINED CHANNELS

NOTES:
1. EROSION STOPS PLACED AT EVERY 25 LINEAR FEET. FOR EROSION STOPS SEE DETAIL 2/EC1.
2. FOR ANCHORAGE OF RECP, SEE DETAIL 1/EC2.
3. USE CCL WHERE CHANNEL OVERLIES EXISTING WASTE. WHERE EXCAVATION INTO UNDERLYING WASTE IS REQUIRED, OVEREXCAVATE ONE FOOT AND BACKFILL WITH STRUCTURAL FILL.

DRAINAGE CHANEL DETAILS

DETAIL 1/EC1
NOT TO SCALE

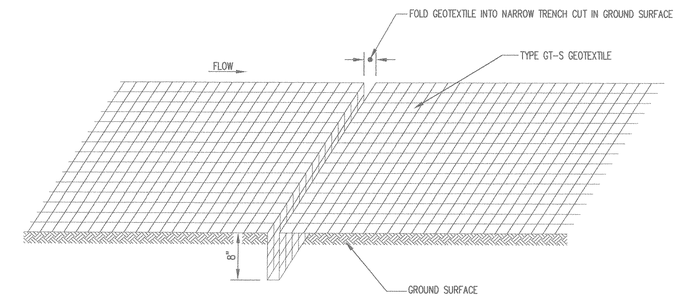

EROSION STOP DETAIL

DETAIL 2/EC1
NOT TO SCALE

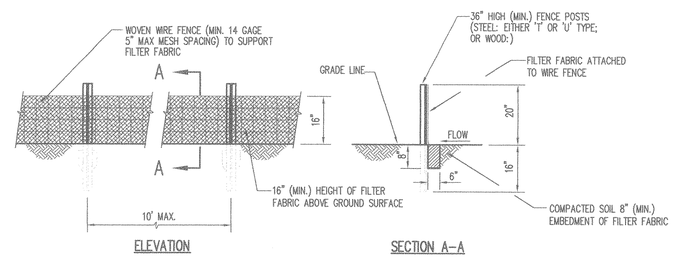

ELEVATION

SECTION A-A

SILT FENCE

DETAIL 3/EC1
NOT TO SCALE

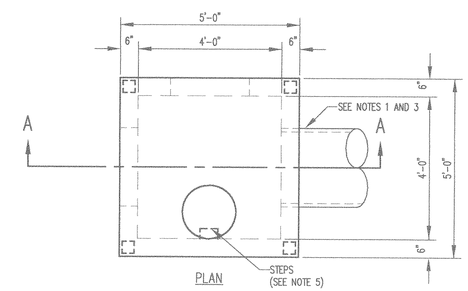

PLAN

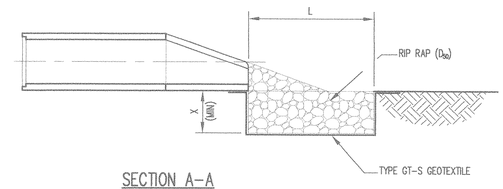

SECTION A-A

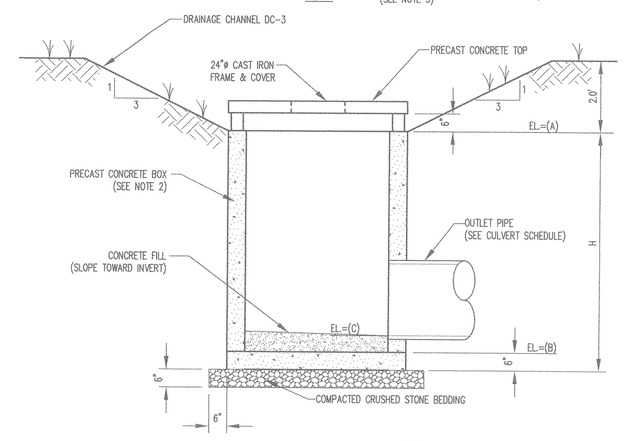

SECTION A-A

NOTES:
1. PROVIDE WATERTIGHT JOINTS ON ALL PIPING.
2. PRECAST CONCRETE BOXES SHALL CONFORM TO THE FOLLOWING REQUIREMENTS:
   A. CONCRETE: COMPRESSIVE STRENGTH 4000 PSI
   B. REINFORCING: ASTM A-615, GRADE 60 C. MEETS H-20 LOADING.
3. PIPES MAY BE ORIENTED DIFFERENTLY WITH RESPECT TO THE THE CHANNEL THAN DISPLAYED HERE. SEE DRAWING EC1 FOR PROPER ORIENTATION.
4. THE CONTRACTOR SHALL PROVIDE ADEQUATE PROTECTION FROM SEDIMENTATION FOR ALL DROP INLETS USING GRAVEL AND WIRE MESH FILTERS OR OTHER METHOD AS APPROVED BY THE ENGINEER.
5. PROVIDE STEPS FOR DROP INLETS WITH H>4.5'. STEPS SHALL HAVE A 16" SPACING THE FULL HEIGHT OF THE DROP INLET. START FIRST STEP 6" BELOW TOP.

DROP INLET SCHEDULE				
DROP INLET	A	B	C	H
DI-1	161.8'	153.5'	154.0'	8.8'
DI-2	159.8'	152.5'	153.0'	7.8'

DROP INLET

DETAIL 4/EC1
NOT TO SCALE

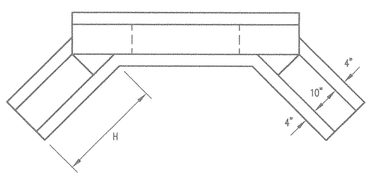

CONCRETE HEADWALL SCHEDULE							
A	B	C	D	E	F	G	H
12"	1'-8"	4'-0"	2'-6"	1'-8"	1'-2"	1'-3"	1'-7"
15"	2'-0"	4'-4"	2'-10"	2'-0"	1'-3"	1'-3"	1'-7"
18"	2'-4"	4'-8"	3'-2"	2'-4"	1'-4"	1'-3"	1'-7"
24"	2'-10"	5'-2"	3'-8"	2'-10"	1'-5"	1'-4"	2'-1"
30"	3'-6"	5'-10"	4'-4"	3'-6"	1'-9"	1'-6"	2'-5"
36"	4'-0"	6'-4"	4'-10"	4'-0"	2'-0"	1'-8"	2'-11"
42"	4'-6"	6'-10"	5'-4"	4'-6"	2'-3"	2'-0"	3'-6"
48"	5'-2"	7'-6"	6'-0"	5'-2"	2'-6"	2'-0"	4'-0"
54"	5'-9"	8'-1"	6'-7"	5'-9"	2'-9"	2'-0"	4'-6"
60"	6'-4"	8'-8"	7'-2"	6'-4"	3'-0"	2'-2"	5'-0"

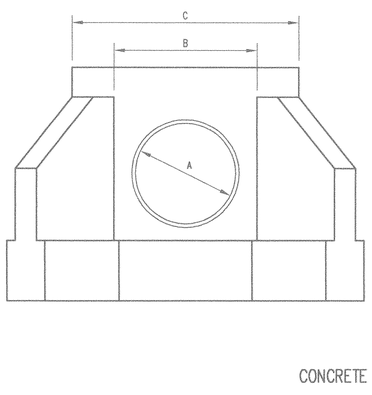

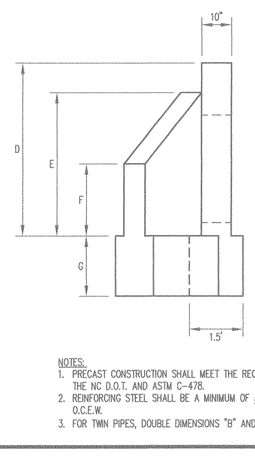

CONCRETE HEADWALL

DETAIL 5/EC1
SCALE: 1"= 2'

NOTES:
1. PRECAST CONSTRUCTION SHALL MEET THE REQUIREMENTS OF THE NC D.O.T. AND ASTM C-478.
2. REINFORCING STEEL SHALL BE A MINIMUM OF #4 @ 6 O.C.E.W.
3. FOR TWIN PIPES, DOUBLE DIMENSIONS "B" AND "C".

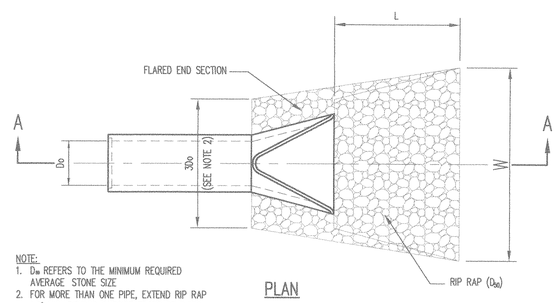

NOTE:
1. D_{50} REFERS TO THE MINIMUM REQUIRED AVERAGE STONE SIZE
2. FOR MORE THAN ONE PIPE, EXTEND RIP RAP 1.0' MIN. BEYOND OUTSIDE EDGES OF PIPES.

PLAN

RIP RAP OUTLET PROTECTION
(OUTLET TO FLAT AREA)

DETAIL 6/EC1
NOT TO SCALE

RIP RAP OUTLET PROTECTION SCHEDULE					
PIPE	D_0 (INCHES)	L (FEET)	W (FEET)	D_{50} (INCHES)	X (FEET)
C-1	42 (2 PIPES)	30	37	12	1.5
C-2	24	12	14	6	1.0
C-3	30	16	19	6	1.0

REVISION	DATE	NO.
MODIFIED DETAILS 4/EC1 & 6/EC1	3/06	1

G. N. RICHARDSON & ASSOCIATES, INC.
Engineering and Geological Services
14 N. Boylan Ave.
Raleigh, N.C. 27603
ph: 919-828-0577
fax: 919-828-3899
www.gnra.com

SEAL

SEAL

PROJECT TITLE: JOHNSTON COUNTY C&D LANDFILL AREA 2 PERMIT DRAWINGS

DRAWING TITLE: EROSION AND SEDIMENTATION CONTROL DETAILS (SHEET 1 OF 2)

DESIGNED BY: P.K.S.	DRAWN BY: J.A.L.
CHECKED BY:	PROJECT NO.: JOHN-22
SCALE: AS SHOWN	DATE: OCT. 2005
FILE NAME: JOHN-D0364A	
SHEET NO.: 15	DRAWING NO.: EC1

G:\CAD-Johnston\John-22\rev 033106\sheets\JOHN-D0364A.dwg, 4/4/2006 12:03:48 PM

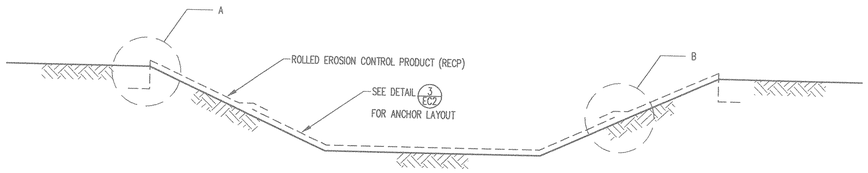

TYPICAL CHANNEL CROSS SECTION

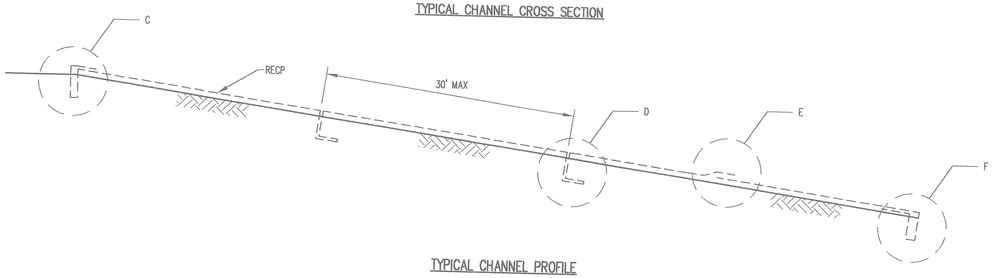

TYPICAL CHANNEL PROFILE

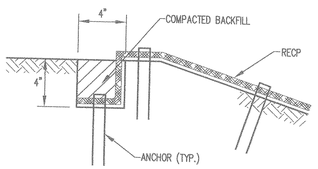

A. LONGITUDINAL ANCHOR TRENCH

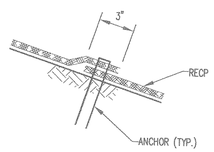

B. OVERLAP AT ADJACENT EDGES

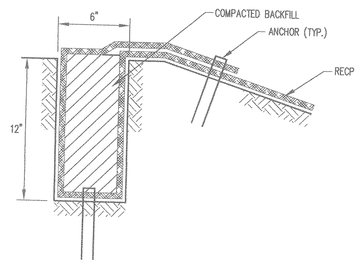

C. UPSTREAM TERMINAL ANCHOR TRENCH

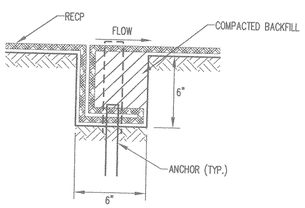

D. INTERMITTENT CHECK SLOT

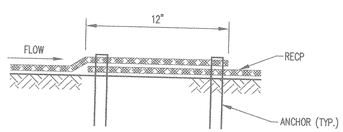

E. OVERLAP AT ROLL ENDS

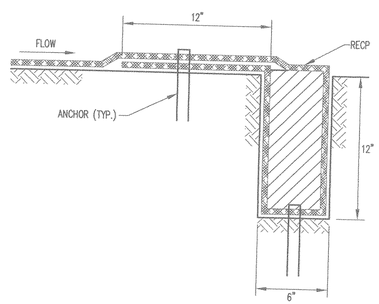

F. DOWNSTREAM TERMINAL ANCHOR TRENCH

NOTES:

1. PLACE ANCHORS AT ANCHOR TRENCHES, OVERLAPS, AND CHECK SLOTS ON 1 FOOT CENTERS. IF APPLICABLE, STAGGER ANCHOR SPACING BETWEEN MULTIPLE ROWS OF ANCHORS.

INSTALLATION OF ROLLED EROSION CONTROL PRODUCTS (CHANNELS)

DETAIL 1/EC2
NOT TO SCALE

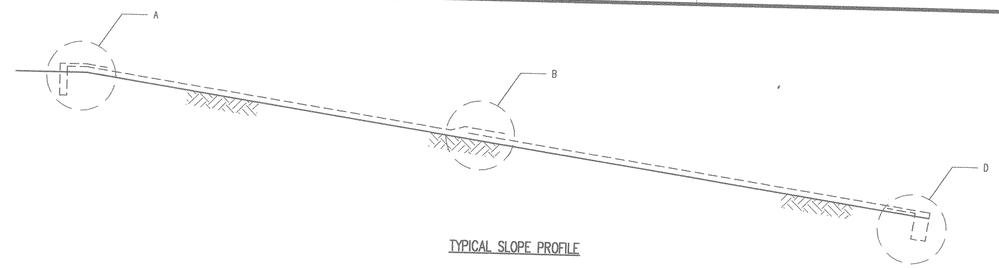

TYPICAL SLOPE PROFILE

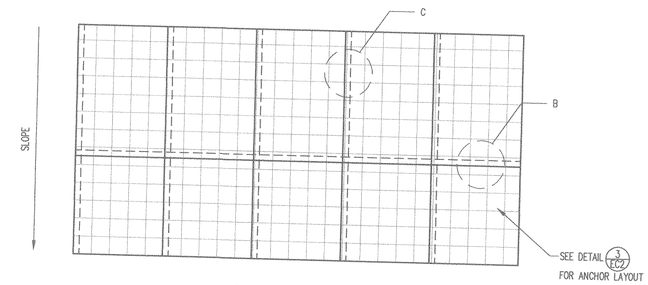

TYPICAL SLOPE PLAN VIEW

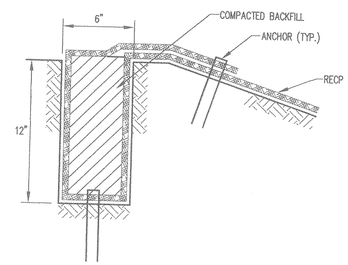

A. UPSLOPE TERMINAL ANCHOR TRENCH

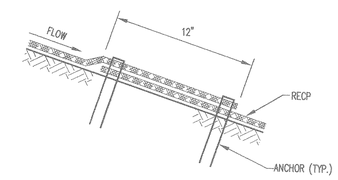

B. OVERLAP AT ROLL ENDS

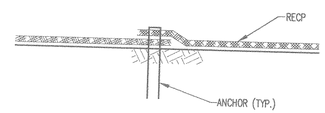

C. OVERLAP AT ADJACENT EDGES

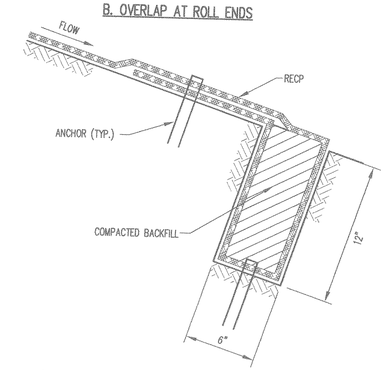

D. DOWNSLOPE TERMINAL ANCHOR TRENCH

NOTES:

1. PLACE ANCHORS AT ANCHOR TRENCHES, OVERLAPS, AND CHECK SLOTS ON 1 FOOT CENTERS. IF APPLICABLE, STAGGER ANCHOR SPACING BETWEEN MULTIPLE ROWS OF ANCHORS.

INSTALLATION OF ROLLED EROSION CONTROL PRODUCTS (SLOPES)

DETAIL 2/EC2
NOT TO SCALE

ANCHOR SPACING SCHEDULE	
LOCATION	REQUIRED ANCHOR SPACING (ANCHORS/YD^2)
ALL CHANNELS	2.5
1.5H:1V SLOPES	2.0
2H:1V SLOPES	2.0
2.5H:1V SLOPES	1.5
3H:1V SLOPES	1.5
3.5H:1V SLOPES	1.0
4H:1V SLOPES	1.0

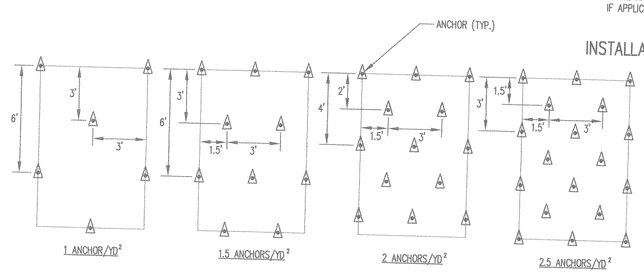

ANCHOR LAYOUT

DETAIL 3/EC2
NOT TO SCALE

REVISION | NO. | DATE

G. N. RICHARDSON & ASSOCIATES, INC.
Engineering and Geological Services
14 N. Boylan Ave.
Raleigh, N.C. 27603
ph: 919-828-0577
fax: 919-828-3899
www.gnra.com

SEAL

PROJECT TITLE: JOHNSTON COUNTY C&D LANDFILL
AREA 2
PERMIT DRAWINGS

DRAWING TITLE: EROSION AND SEDIMENTATION CONTROL DETAILS (SHEET 2 OF 2)

DESIGNED BY: P.K.S.	DRAWN BY: J.A.L.
CHECKED BY:	PROJECT NO.: JOHN-22
SCALE: AS SHOWN	DATE: OCT. 2005
FILE NAME: JOHN-D0363	
SHEET NO.	DRAWING NO.

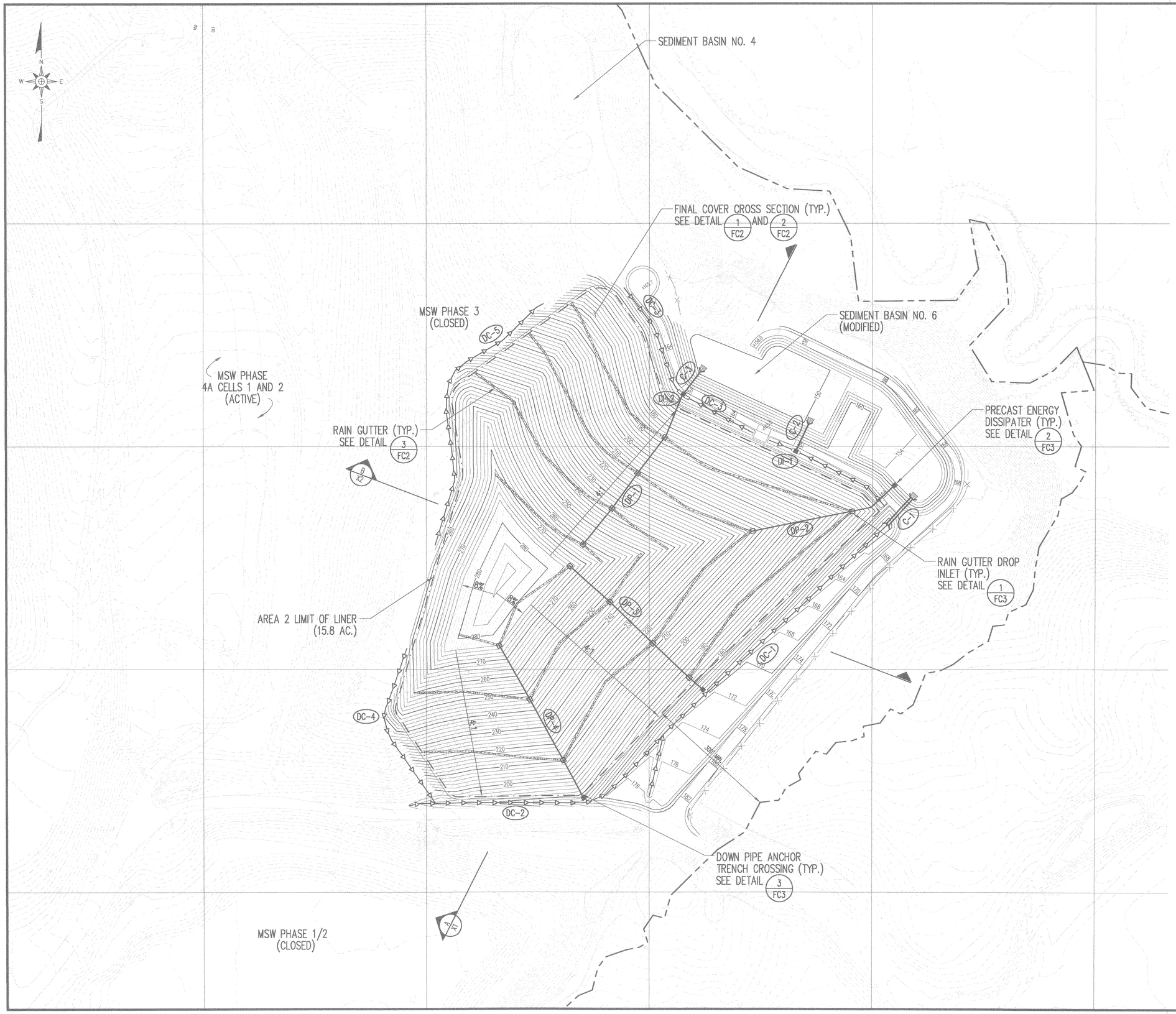

PIPING SCHEDULE	
RAIN GUTTERS	
PIPE DIAMETER (INCHES)	MAX. DRAINAGE AREA (AC.)
6	0.32
8	0.67
10	1.18
12	1.89
DOWN PIPE DROP INLETS	
PIPE DIAMETER (INCHES)	MAX. DRAINAGE AREA (AC.)
8	0.52
10	0.80
12	1.14
14	1.37
16	1.80
18	2.27
DOWN PIPES	
PIPE DIAMETER (INCHES)	MAX. DRAINAGE AREA (AC.)
8	0.77
10	1.36
12	2.18
14	2.76
16	3.99
18	5.42

LEGEND

- EXISTING 10' CONTOUR (SEE REFERENCE 1)
- EXISTING 2' CONTOUR
- APPROXIMATE PROPERTY LINE
- 150 PROPOSED 10' CONTOUR
- PROPOSED 2' CONTOUR
- DP-3 DOWN PIPE
- DC-1 DRAINAGE CHANNEL
- C-1 CULVERT NUMBER
- DI-1 DROP INLET NUMBER
- DOWN PIPE DROP INLET
- PRECAST ENERGY DISSIPATER
- RAIN GUTTER

NOTES

1. GRADES SHOWN REPRESENT APPROXIMATE TOP OF FINAL COVER GRADES.
2. THE RAIN GUTTERS AND DOWN PIPES SHOWN ARE CONCEPTUAL LOCATIONS ONLY. THE DESIGN OF THESE DEVICES IS TO BE EVALUATED PRIOR TO THE PLACEMENT OF FINAL COVER.

REFERENCES

1. OVERALL SITE TOPOGRAPHY PROVIDED BY GEODATA CORPORATION, BASED ON MAY 21, 2004 AERIAL PHOTOGRAPHY. TOPOGRAPHY IN ACTIVE AREAS PROVIDED BY SPECTRUM NC, LLC, BASED ON MARCH 21, 2005 AERIAL PHOTOGRAPHY. TOPOGRAPHY OF PHASE 4 CELL 2 PROVIDED BY 4D SITE SOLUTIONS INC., DATED JUNE 2, 2005. TOPOGRAPHY IN PHASE 5 AREA PROVIDED BY SOUTHWIND SURVEYING AND ENGINEERING, GARNER, NC, DATED JUNE 16, 2003.

0 100' 200' 300'

NO.	DATE	REVISION
	3/06	REVISED AREA 2 BASE GRADES

G. N. RICHARDSON & ASSOCIATES, INC.
Engineering and Geological Services
14 N. Boylan Ave.
Raleigh, N.C. 27603
ph: 919-828-0577
fax: 919-828-3899
www.gnra.com

SEAL

PROJECT TITLE: JOHNSTON COUNTY C&D LANDFILL AREA 2 PERMIT DRAWINGS

DRAWING TITLE: AREA 2 FINAL COVER GRADING AND DRAINAGE PLAN

DESIGNED BY: P.K.S.	DRAWN BY: C.T.J.
CHECKED BY:	PROJECT NO.: JOHN-22
SCALE: AS SHOWN	DATE: OCT. 2005
FILE NAME: JOHN-D0386A	
SHEET NO. 17	DRAWING NO. FC1

G:\CAD\Johnston\John-22\rev 03\106\sheets\JOHN-D0386A.dwg, 4/4/2006 12:03:34 PM

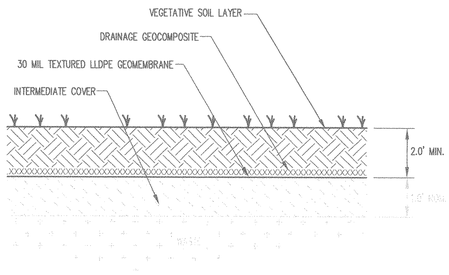

FINAL COVER SYSTEM

DETAIL 1/FC2
NOT TO SCALE

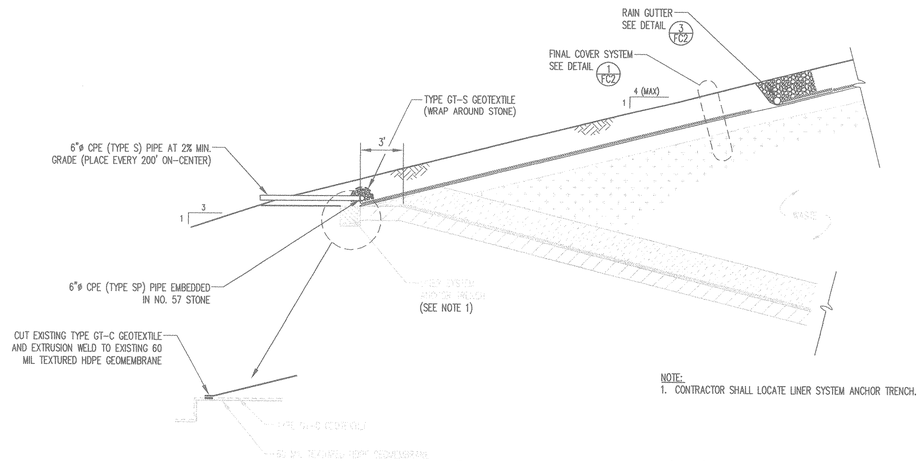

NOTE:
1. CONTRACTOR SHALL LOCATE LINER SYSTEM ANCHOR TRENCH.

FINAL COVER CROSS-SECTION (TYP.)

DETAIL 2/FC2
NOT TO SCALE

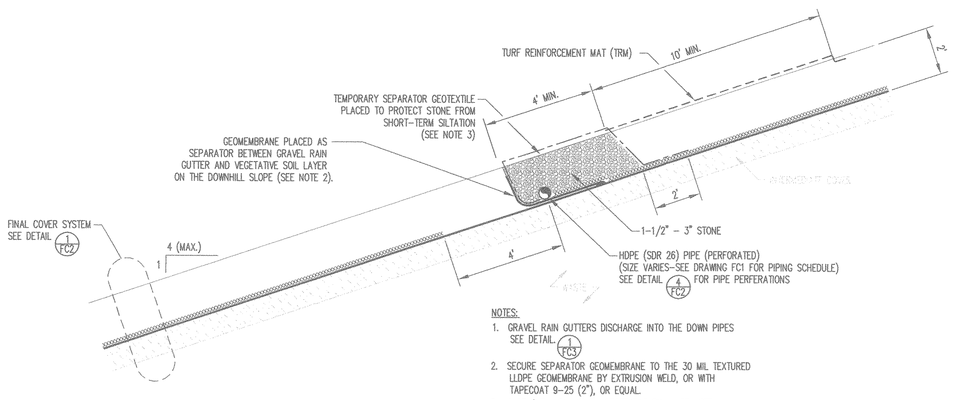

NOTES:
1. GRAVEL RAIN GUTTERS DISCHARGE INTO THE DOWN PIPES SEE DETAIL. 1/FC3
2. SECURE SEPARATOR GEOMEMBRANE TO THE 30 MIL TEXTURED LLDPE GEOMEMBRANE BY EXTRUSION WELD, OR WITH TAPECOAT 9-25 (2"), OR EQUAL.
3. 4 OZ./ SY NON-WOVEN GEOTEXTILE SHALL BE USED.

RAIN GUTTER

DETAIL 3/FC2
NOT TO SCALE

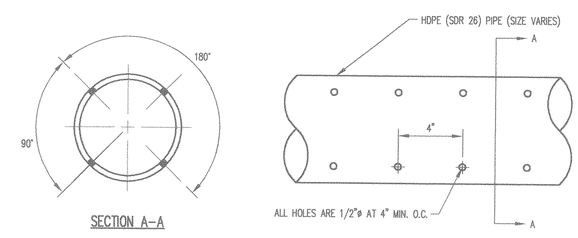

RAIN GUTTER PIPE PERFORATIONS

DETAIL 4/FC2
NOT TO SCALE

NO.	DATE	REVISION

G. N. RICHARDSON & ASSOCIATES, INC.
Engineering and Geological Services
14 N. Boylan Ave.
Raleigh, N.C. 27603
ph: 919-828-0577
fax: 919-828-3899
www.gnra.com

SEAL

PROJECT TITLE:
JOHNSTON COUNTY C&D LANDFILL
AREA 2
PERMIT DRAWINGS

DRAWING TITLE:
FINAL COVER DETAILS
(SHEET 1 OF 2)

DESIGNED BY: P.K.S.	DRAWN BY: J.A.L.
CHECKED BY:	PROJECT NO.: JOHN-22
SCALE: AS SHOWN	DATE: OCT. 2005
FILE NAME: JOHN-D0370	
SHEET NO. 18	DRAWING NO. FC2

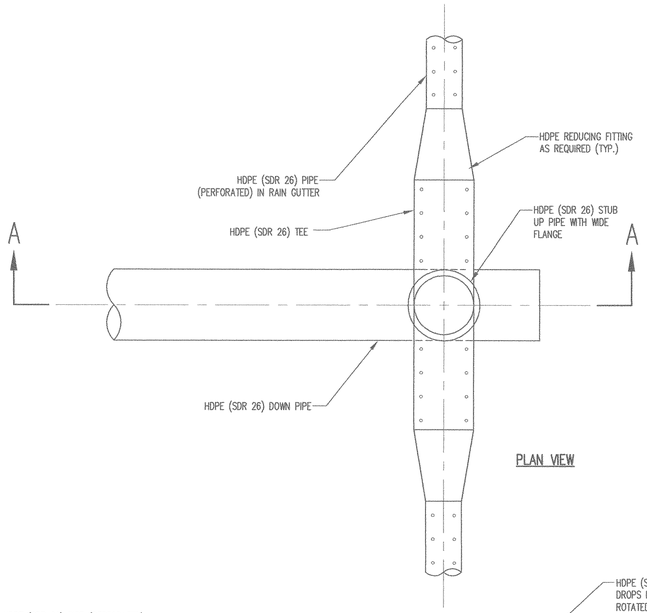

PLAN VIEW

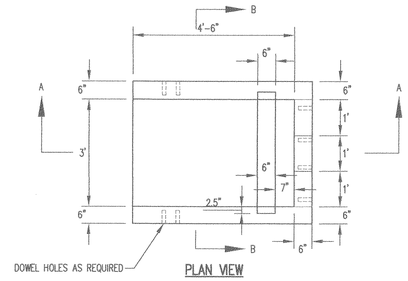

PLAN VIEW

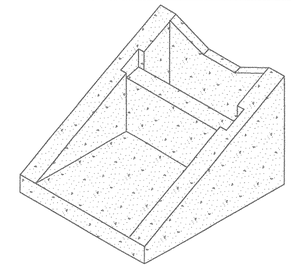

ISOMETRIC VIEW

NOTES:
1. CONCRETE STRENGTH 4,000 PSI MINIMUM.
2. REINFORCING STEEL SHALL CONFORM TO ASTM A-615, GRADE 40.
3. DIMENSIONS SHOWN FOR CONCRETE THICKNESS ARE MINIMUMS. ACTUAL MEASUREMENTS MAY VARY WITH MANUFACTURER'S TOLERANCES.

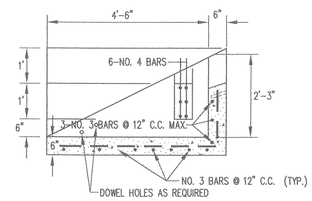

SECTION A-A

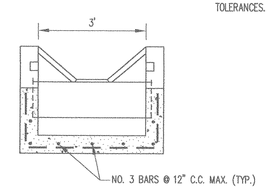

SECTION B-B

PRECAST ENERGY DISSIPATER

DETAIL 2/FC3
NOT TO SCALE

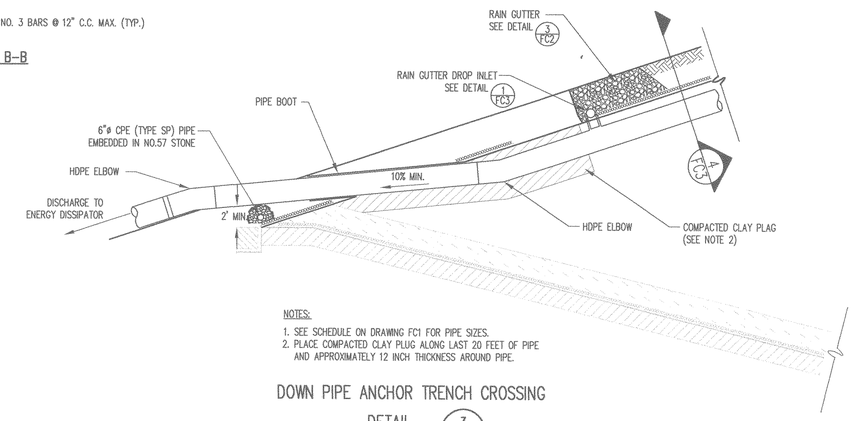

NOTES:
1. SEE SCHEDULE ON DRAWING FC1 FOR PIPE SIZES.
2. PLACE COMPACTED CLAY PLUG ALONG LAST 20 FEET OF PIPE AND APPROXIMATELY 12 INCH THICKNESS AROUND PIPE.

DOWN PIPE ANCHOR TRENCH CROSSING

DETAIL 3/FC3
NOT TO SCALE

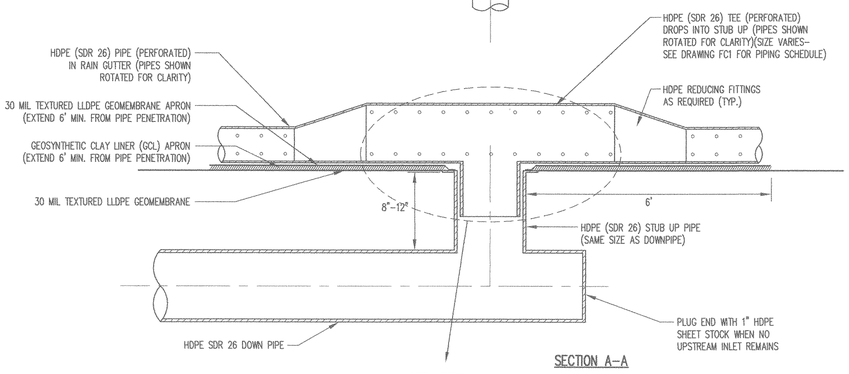

SECTION A-A

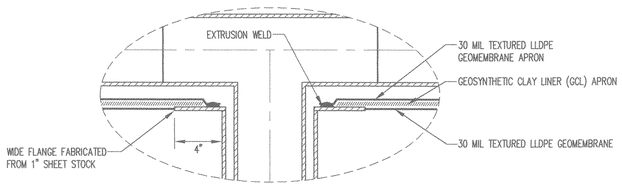

DETAIL

RAIN GUTTER DROP INLET

DETAIL 1/FC3
NOT TO SCALE

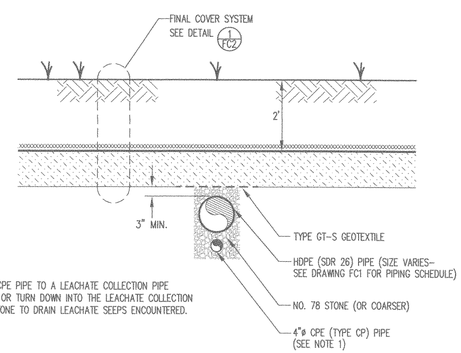

NOTE:
1. CONNECT CPE PIPE TO A LEACHATE COLLECTION PIPE CLEANOUT OR TURN DOWN INTO THE LEACHATE COLLECTION SYSTEM STONE TO DRAIN LEACHATE SEEPS ENCOUNTERED.

TYPICAL DOWN PIPE SECTION

DETAIL 4/FC3
NOT TO SCALE

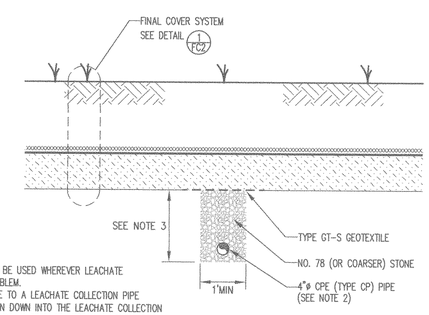

NOTES:
1. THIS DETAIL IS TO BE USED WHEREVER LEACHATE SEEPS ARE A PROBLEM.
2. CONNECT CPE PIPE TO A LEACHATE COLLECTION PIPE CLEANOUT OR TURN DOWN INTO THE LEACHATE COLLECTION SYSTEM STONE TO DRAIN SEEP COLLECTION TRENCH.
3. DEPTH OF TRENCH IS AS REQUIRED TO DRAIN SEEP(S).

SEEP COLLECTION TRENCH

DETAIL 5/FC3
NOT TO SCALE

NO.	DATE	REVISION

G. N. RICHARDSON & ASSOCIATES, INC.
Engineering and Geological Services
14 N. Boylan Ave.
Raleigh, N.C. 27603
ph: 919-828-0577
fax: 919-828-3899
www.gnra.com

SEAL

SEAL

PROJECT TITLE:
JOHNSTON COUNTY C&D LANDFILL
AREA 2
PERMIT DRAWINGS

DRAWING TITLE:
FINAL COVER DETAILS
(SHEET 2 OF 2)

DESIGNED BY: P.K.S.	DRAWN BY: J.A.L.
CHECKED BY:	PROJECT NO.: JOHN-22
SCALE: AS SHOWN	DATE: OCT. 2005
FILE NAME: JOHN-D0360	
SHEET NO. 19	DRAWING NO. FC3

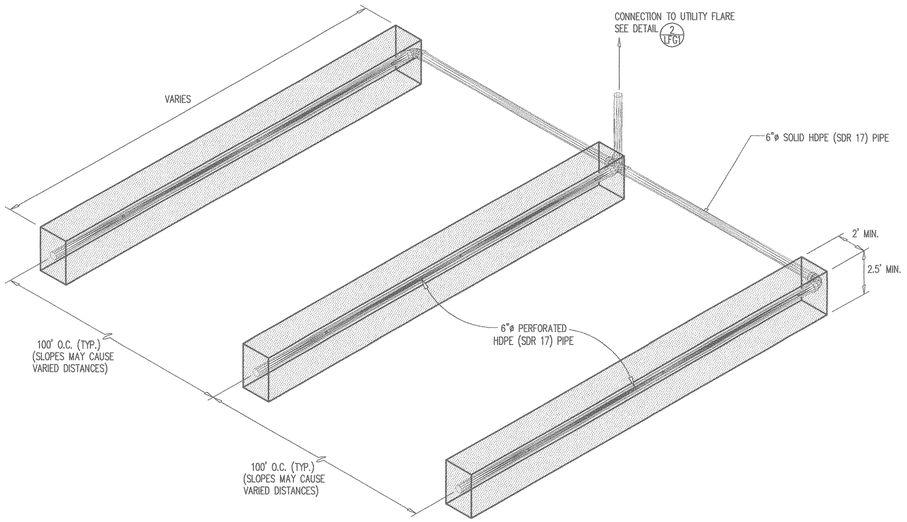

GAS COLLECTION NETWORK

DETAIL 1 LFG1
NOT TO SCALE

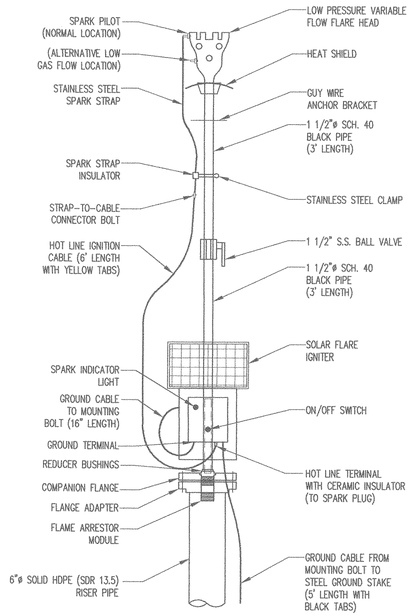

NOTE:
1. USE LANDFILL TECHNOLOGIES, INC. CF-5 SOLAR FLARE OR OTHER APPROVED EQUAL.

LFG UTILITY FLARE

DETAIL 2 LFG1
SCALE: 1" = 1'

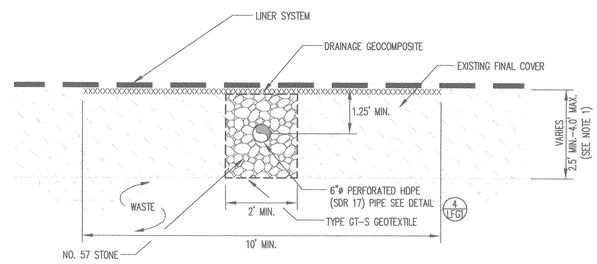

NOTE:
1. EXCAVATE TRENCH SUCH THAT EXISTING COVER IS BREACHED OR TO A MAXIMUM DEPTH OF 4 FEET.

LFG SURFACE COLLECTOR TRENCH CROSS SECTION

DETAIL 3 LFG1
SCALE: 1" = 2'

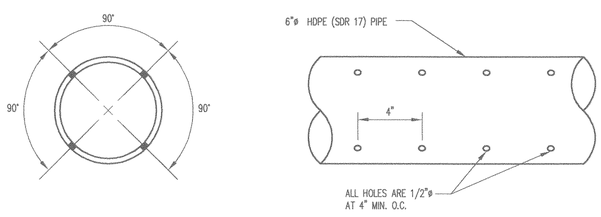

LANDFILL GAS PIPING

HDPE PIPE PERFORATIONS

DETAIL 4 LFG1
NOT TO SCALE

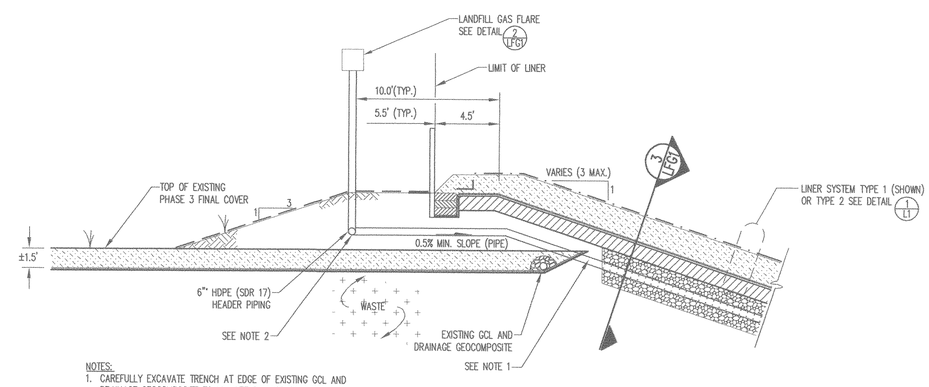

NOTES:
1. CAREFULLY EXCAVATE TRENCH AT EDGE OF EXISTING GCL AND DRAINAGE GEOCOMPOSITE TO MINIMIZE DAMAGE TO THESE MATERIALS.
2. PROVIDE CONCRETE FOR SUPPORT OF PIPING UNDER LANDFILL GAS FLARES AS REQUIRED.

LFG PIPING CROSS SECTION

DETAIL 5 LFG1
SCALE: 1" = 5'

NO.	DATE	REVISION

G. N. RICHARDSON & ASSOCIATES, INC.
Engineering and Geological Services
14 N. Boylan Ave. Raleigh, N.C. 27603
ph: 919-828-0577
fax: 919-828-3899
www.gnra.com

SEAL

PROJECT TITLE: JOHNSTON COUNTY C&D LANDFILL
AREA 2
PERMIT DRAWINGS

DRAWING TITLE: LANDFILL GAS MANAGEMENT DETAILS

DESIGNED BY: P.K.S.	DRAWN BY: J.A.L.
CHECKED BY:	PROJECT NO.: JOHN-22
SCALE: AS SHOWN	DATE: OCT. 2005
FILE NAME: JOHN-D0359	
SHEET NO. 20	DRAWING NO. LFG1

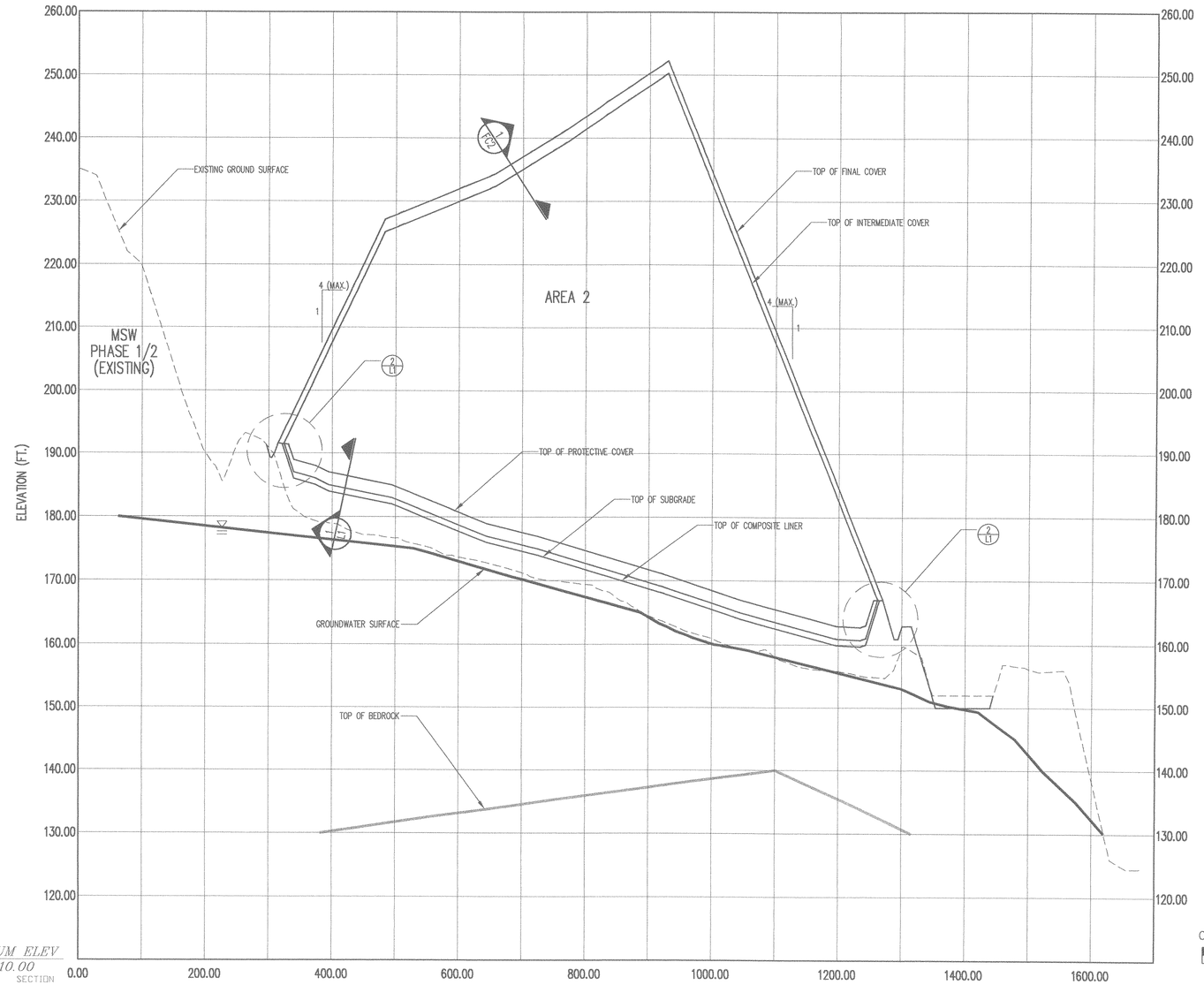

DATUM ELEV
110.00
GROUP SECTION
SECTION AA

SECTION A/1
AS SHOWN
X1

*VERTICAL EXAGGERATION = 10x

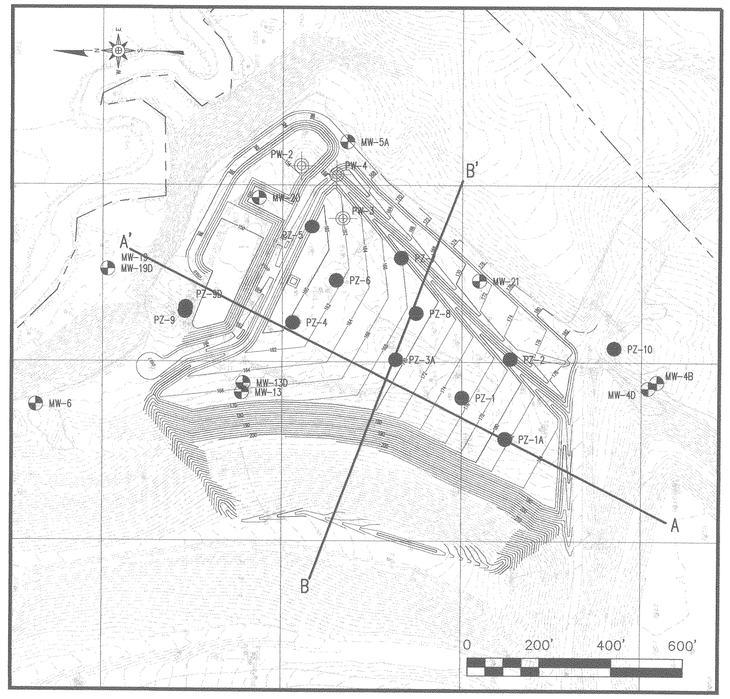

30'
20'
10'
0

0 100' 200' 300'

LEGEND

- EXISTING 10' CONTOUR
- EXISTING 2' CONTOUR
- 150 PROPOSED 10' CONTOUR
- PROPOSED 2' CONTOUR
- PROPERTY LINE
- AREA 2 LIMIT OF LINER
- MW-8D EXISTING MONITORING WELL
- PW-2 EXISTING PIEZOMETER
- PZ-4 EXISTING PIEZOMETER

NOTES

1. GRADES SHOWN FOR AREA 2 REPRESENT TOP OF SUBGRADE.

REFERENCES

1. OVERALL SITE TOPOGRAPHY PROVIDED BY GEODATA CORPORATION, BASED ON MAY 21, 2004 AERIAL PHOTOGRAPHY. TOPOGRAPHY IN ACTIVE AREAS PROVIDED BY SPECTRUM NC, LLC, BASED ON MARCH 21, 2005 AERIAL PHOTOGRAPHY. TOPOGRAPHY OF PHASE 4 CELL 2 PROVIDED BY 4D SITE SOLUTIONS INC., DATED JUNE 2, 2005. TOPOGRAPHY IN PHASE 5 AREA PROVIDED BY SOUTHWIND SURVEYING AND ENGINEERING, GARNER, NC, DATED JUNE 16, 2003.

DATE	NO.	REVISION
3/06		REVISED AREA 2 BASE GRADES

G. N. RICHARDSON & ASSOCIATES, INC.
Engineering and Geological Services
14 N. Boylan Ave.
Raleigh, N.C. 27603
ph: 919-828-0577
fax: 919-828-3899
www.gnra.com

SEAL

PROJECT TITLE: JOHNSTON COUNTY C&D LANDFILL
AREA 2
PERMIT DRAWINGS

DRAWING TITLE: AREA 2
ENGINEERING CROSS SECTIONS
(SHEET 2 OF 2)

DESIGNED BY: P.K.S.	DRAWN BY: J.A.L.
CHECKED BY:	PROJECT NO.: JOHN-22
SCALE: AS SHOWN	DATE: OCT. 2005
FILE NAME: JOHN-D0394A	
SHEET NO. 21	DRAWING NO. X1

G:\CAD\Johnston\John-22\rev 03\1106\sheets\JOHN-D0394A.dwg, 4/4/2006 12:04:19 PM

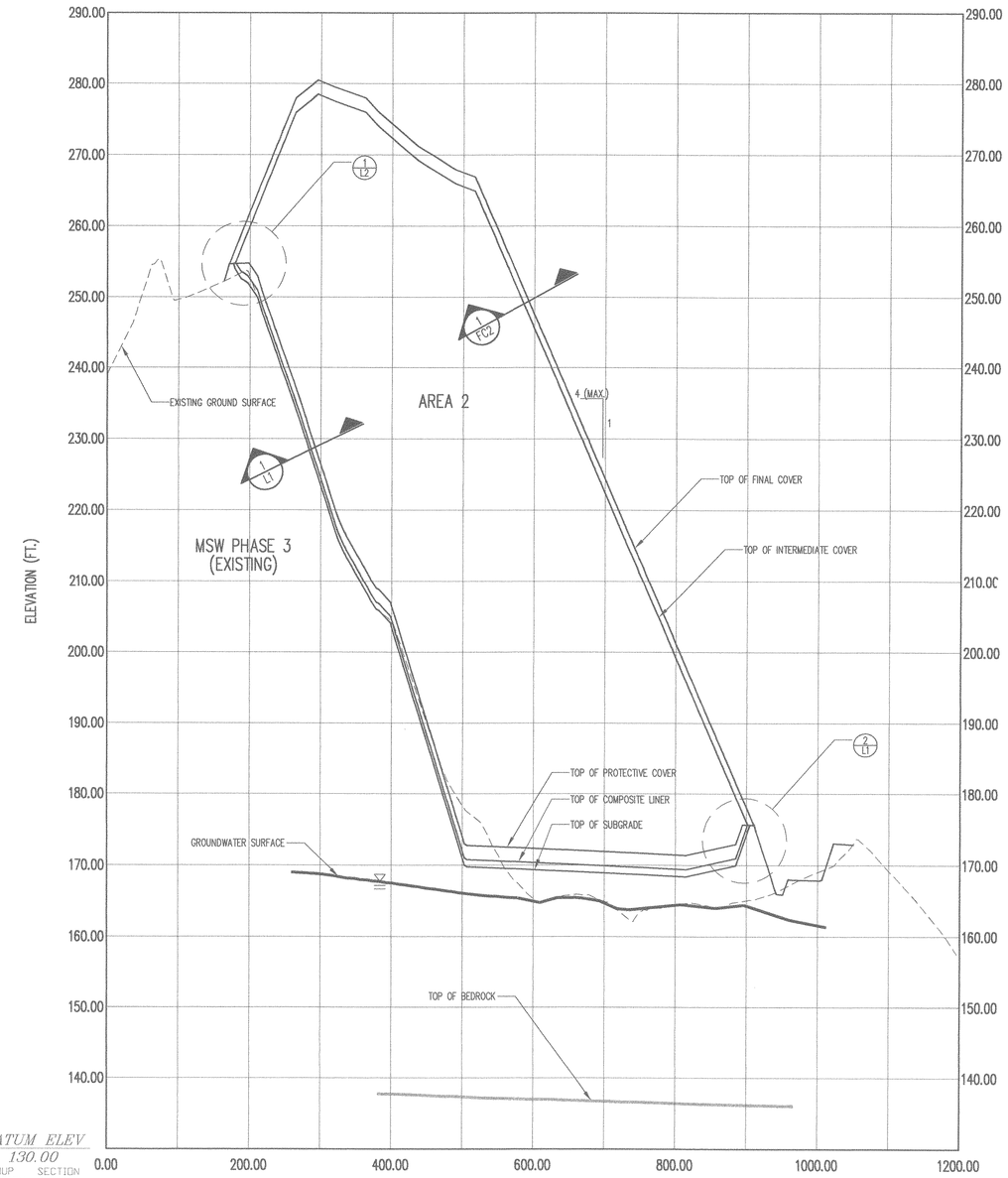

SECTION B/X2 1
AS SHOWN
*VERTICAL EXAGGERATION = 10x

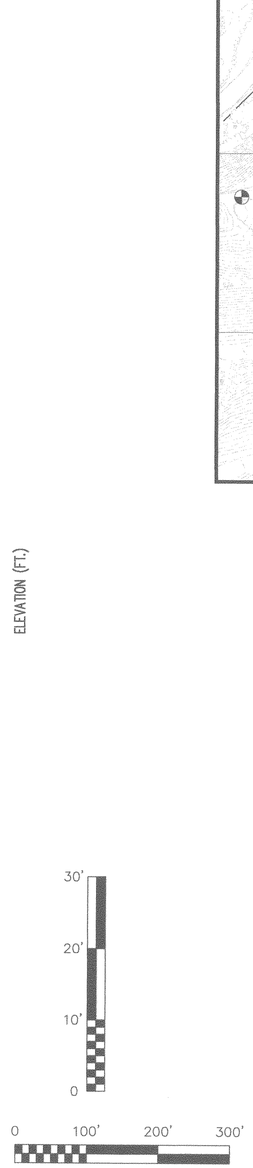

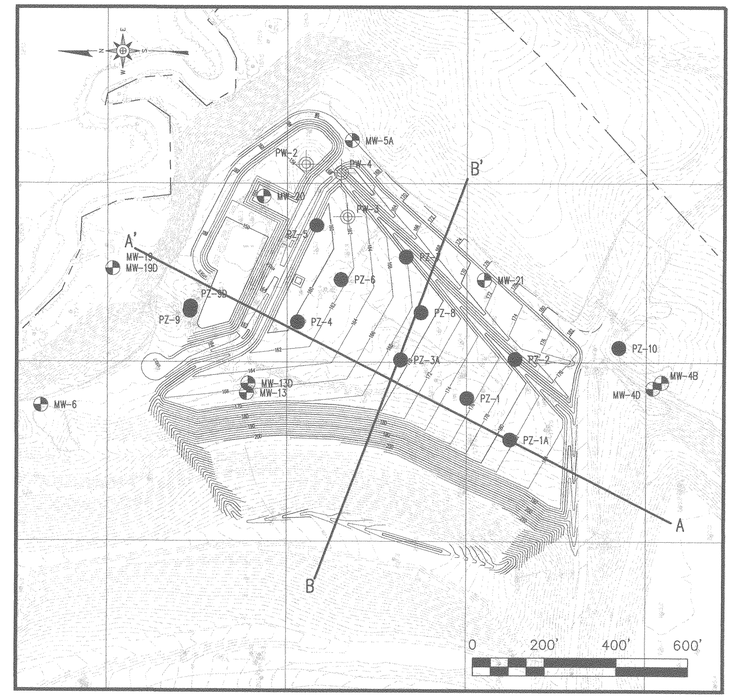

LEGEND

- EXISTING 10' CONTOUR
- EXISTING 2' CONTOUR
- 150 PROPOSED 10' CONTOUR
- PROPOSED 2' CONTOUR
- PROPERTY LINE
- AREA 2 LIMIT OF LINER
- MW-8D EXISTING MONITORING WELL
- PW-2 EXISTING PIEZOMETER
- PZ-4 EXISTING PIEZOMETER

NOTES

1. GRADES SHOWN FOR AREA 2 REPRESENT TOP OF SUBGRADE.

REFERENCES

1. OVERALL SITE TOPOGRAPHY PROVIDED BY GEODATA CORPORATION, BASED ON MAY 21, 2004 AERIAL PHOTOGRAPHY. TOPOGRAPHY IN ACTIVE AREAS PROVIDED BY SPECTRUM NC, LLC, BASED ON MARCH 21, 2005 AERIAL PHOTOGRAPHY. TOPOGRAPHY OF PHASE 4 CELL 2 PROVIDED BY 4D SITE SOLUTIONS INC., DATED JUNE 2, 2005. TOPOGRAPHY IN PHASE 5 AREA PROVIDED BY SOUTHWIND SURVEYING AND ENGINEERING, GARNER, NC, DATED JUNE 16, 2003.

NO.	DATE	REVISION
1	3/06	REVISED AREA 2 BASE GRADES

G. N. RICHARDSON & ASSOCIATES, INC.
Engineering and Geological Services
14 N. Boylan Ave.
Raleigh, N.C. 27603
ph: 919-828-0577
fax: 919-828-3899
www.gnra.com

SEAL

SEAL

PROJECT TITLE: JOHNSTON COUNTY C&D LANDFILL
AREA 2
PERMIT DRAWINGS

DRAWING TITLE: AREA 2
ENGINEERING CROSS SECTIONS
(SHEET 2 OF 2)

DESIGNED BY: P.K.S.	DRAWN BY: J.A.L.
CHECKED BY:	PROJECT NO.: JOHN-22
SCALE: AS SHOWN	DATE: OCT. 2005
FILE NAME: JOHN-D0395A	
SHEET NO. 22	DRAWING NO. X2

G:\CAD\Johnston\John-22\rev 03\106\sheets\JOHN-D0395A.dwg, 4/4/2006 12:04:14 PM

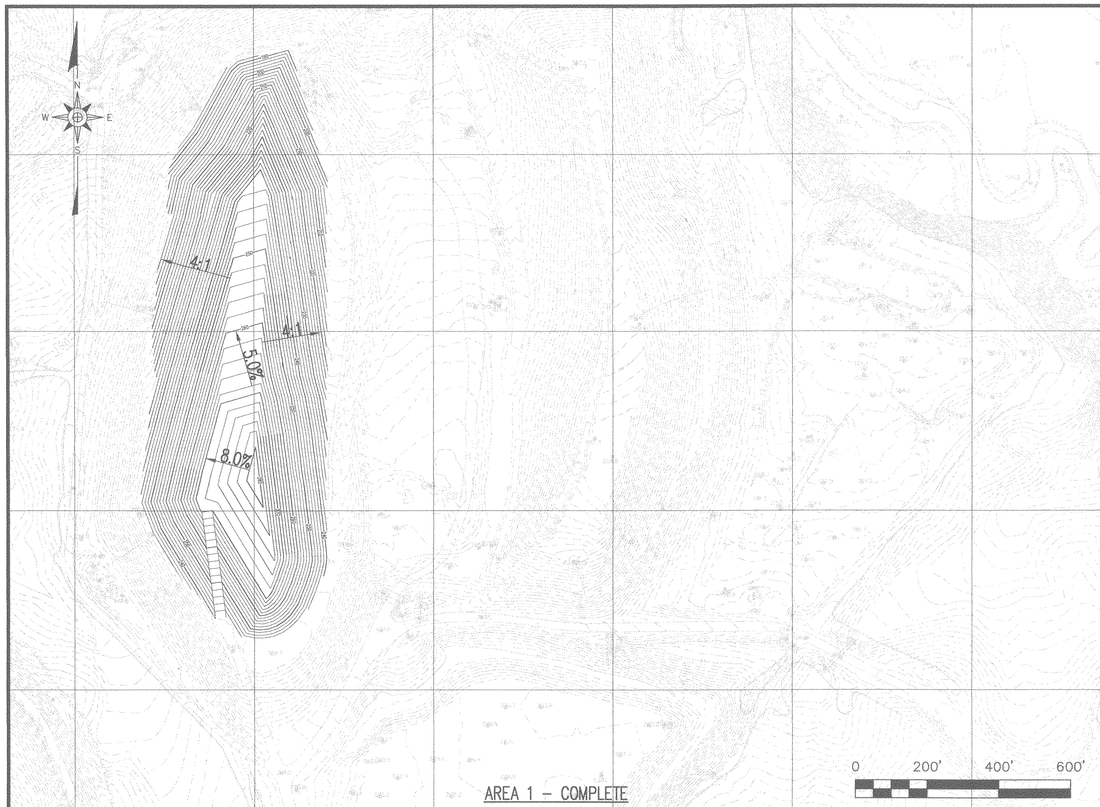

AREA 1 – COMPLETE

AREA 2 – CELL 1

AREA 2 – CELL 2

AREA 2 – COMPLETE

DATE	NO.	REVISION
3/06	1	REVISED AREA 2 BASE GRADES

G. N. RICHARDSON & ASSOCIATES, INC.
Engineering and Geological Services
14 N. Boylan Ave.
Raleigh, N.C. 27603
www.gnra.com
ph: 919-828-0577
fax: 919-828-3899

SEAL

SEAL
PROFESSIONAL ENGINEER
SEAL
021668
PIETER K. SOEST
4/4/06

PROJECT TITLE:
JOHNSTON COUNTY C&D LANDFILL
AREA 2
PERMIT DRAWINGS

DRAWING TITLE:
C&D LANDFILL PHASING PLAN

DESIGNED BY: P.K.S.	DRAWN BY: J.A.L.
CHECKED BY:	PROJECT NO.: JOHN-22
SCALE: AS SHOWN	DATE: OCT. 2005
FILE NAME: JOHN-D0396A	
SHEET NO. 23	DRAWING NO. P1

G:\CAD\Johnston\John-22\rev 033106\sheets\JOHN-D0396A.dwg, 4/4/2006 12:04:31 PM

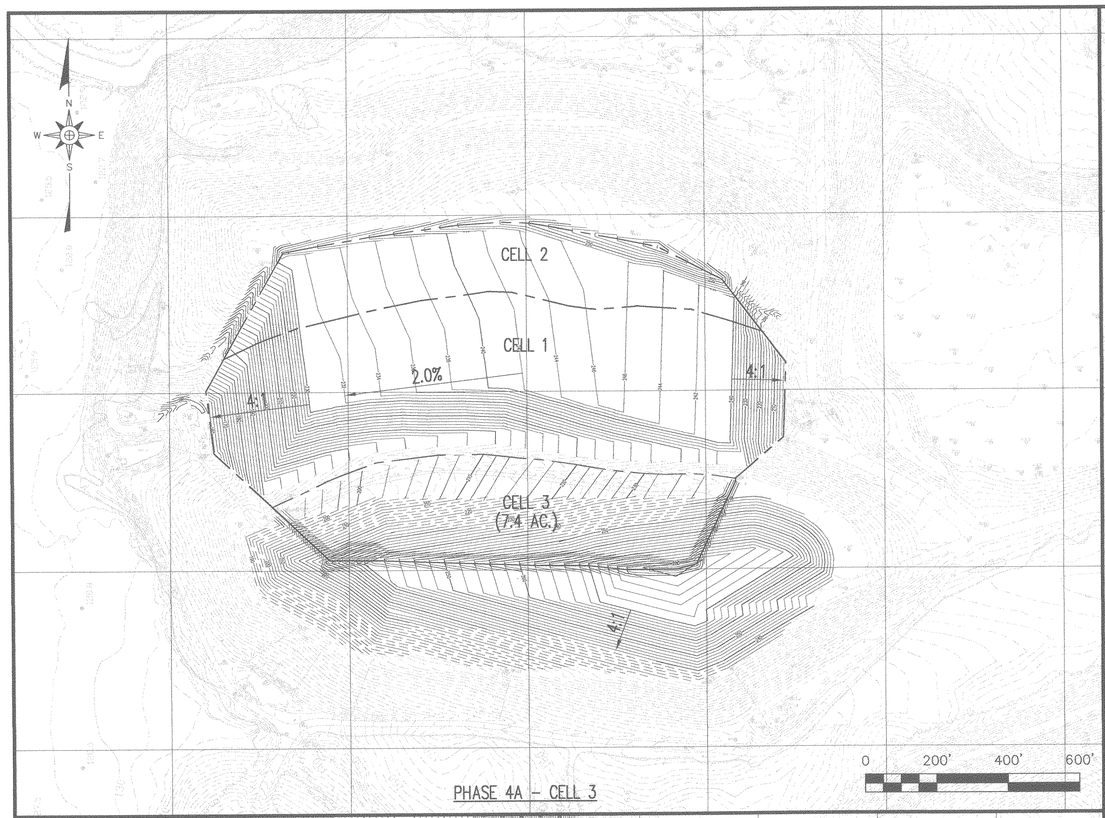

PHASE 4A – CELL 3

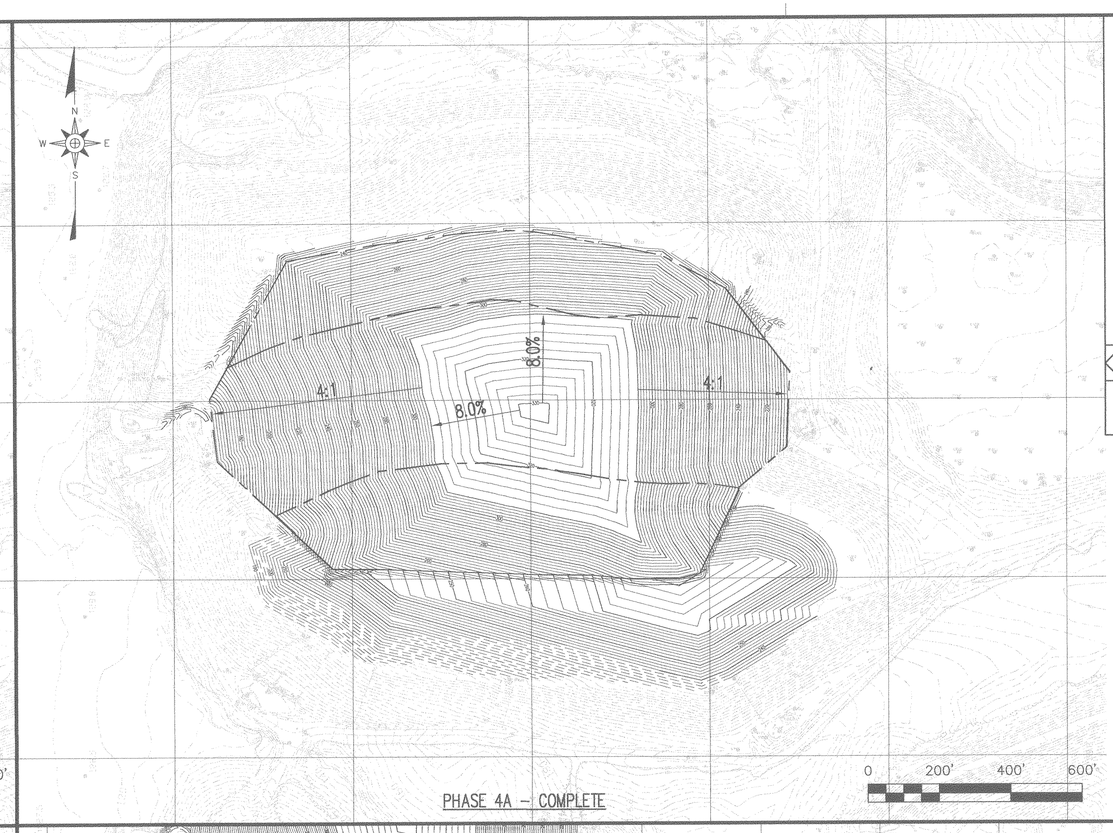

PHASE 4A – COMPLETE

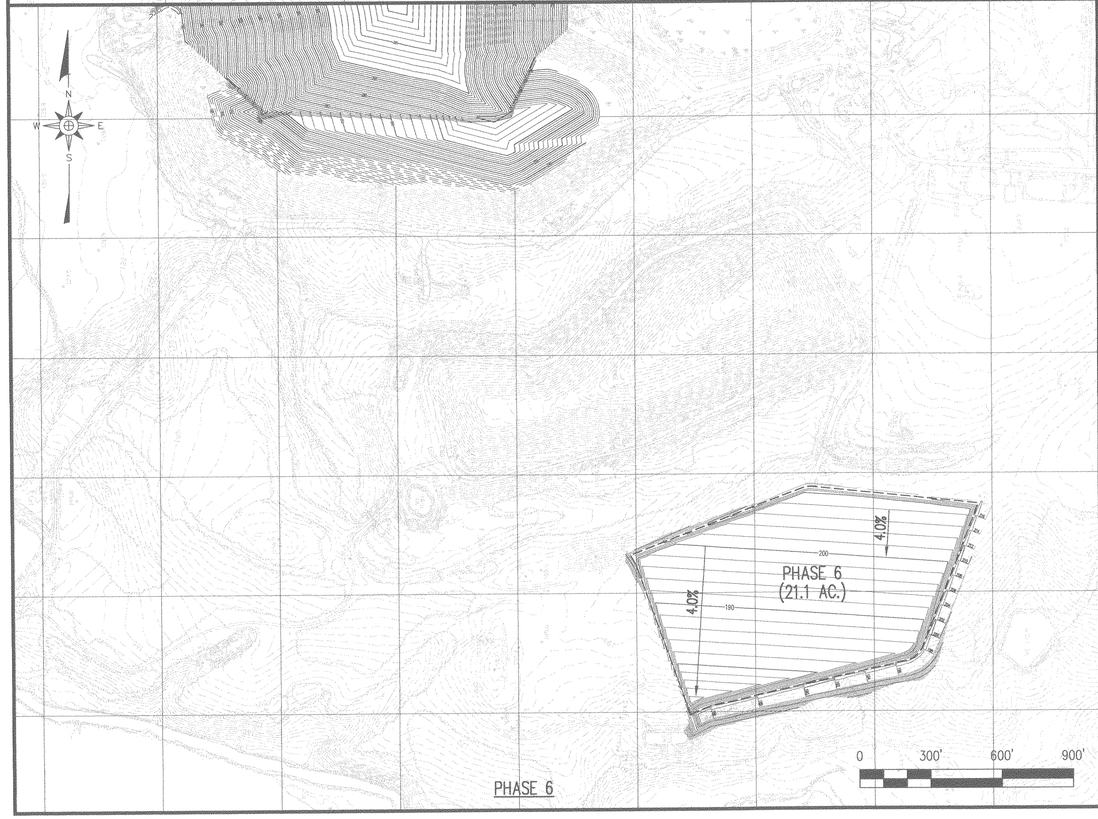

PHASE 6

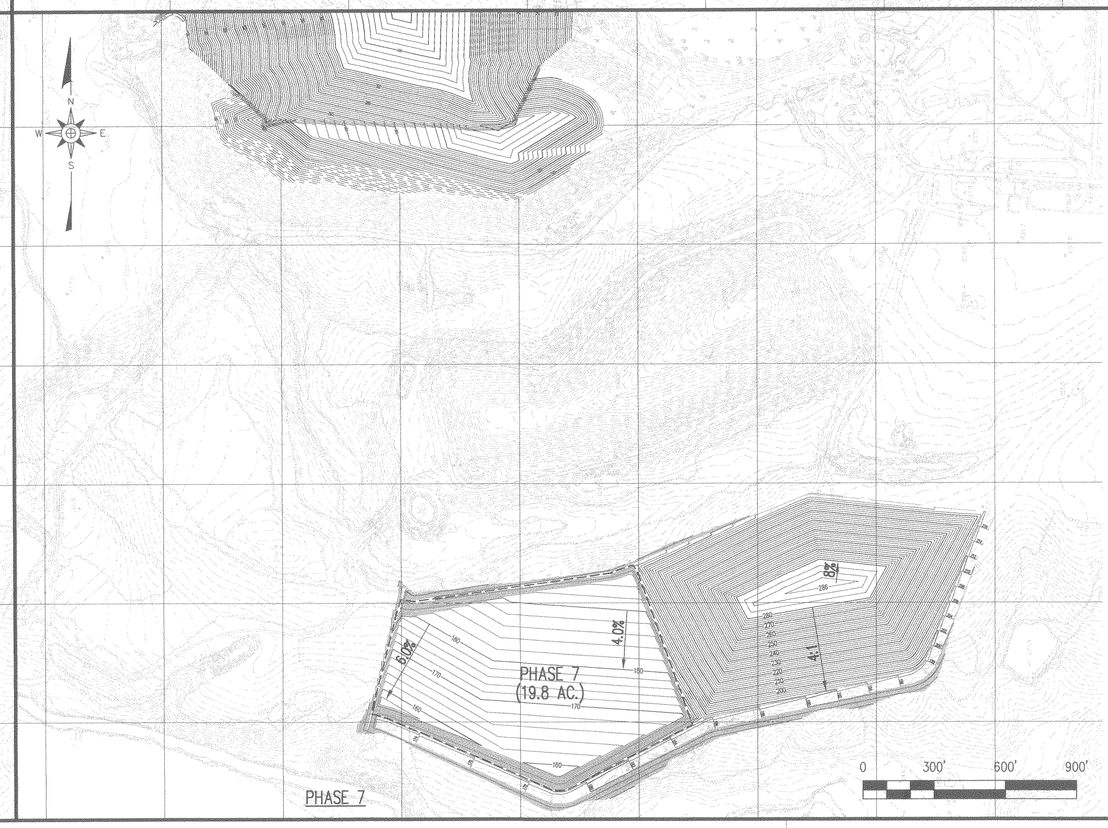

PHASE 7

DATE	NO.	REVISION

G. N. RICHARDSON & ASSOCIATES, INC.
Engineering and Geological Services
14 N. Boylan Ave.
Raleigh, N.C. 27603
www.gnra.com
ph: 919-828-0577
fax: 919-828-3899

SEAL

SEAL
NORTH CAROLINA PROFESSIONAL SEAL 021666 ENGINEER PIETER K. SCHERR
12/1/05

PROJECT TITLE:
JOHNSTON COUNTY C&D LANDFILL
AREA 2
PERMIT DRAWINGS

DRAWING TITLE:
MSW LANDFILL PHASING PLAN
(SHEET 1 OF 2)

DESIGNED BY: P.K.S.	DRAWN BY: C.T.J.
CHECKED BY:	PROJECT NO.: JOHN-22
SCALE: AS SHOWN	DATE: OCT. 2005
FILE NAME: JOHN-D0368	
SHEET NO. 24	DRAWING NO. P2

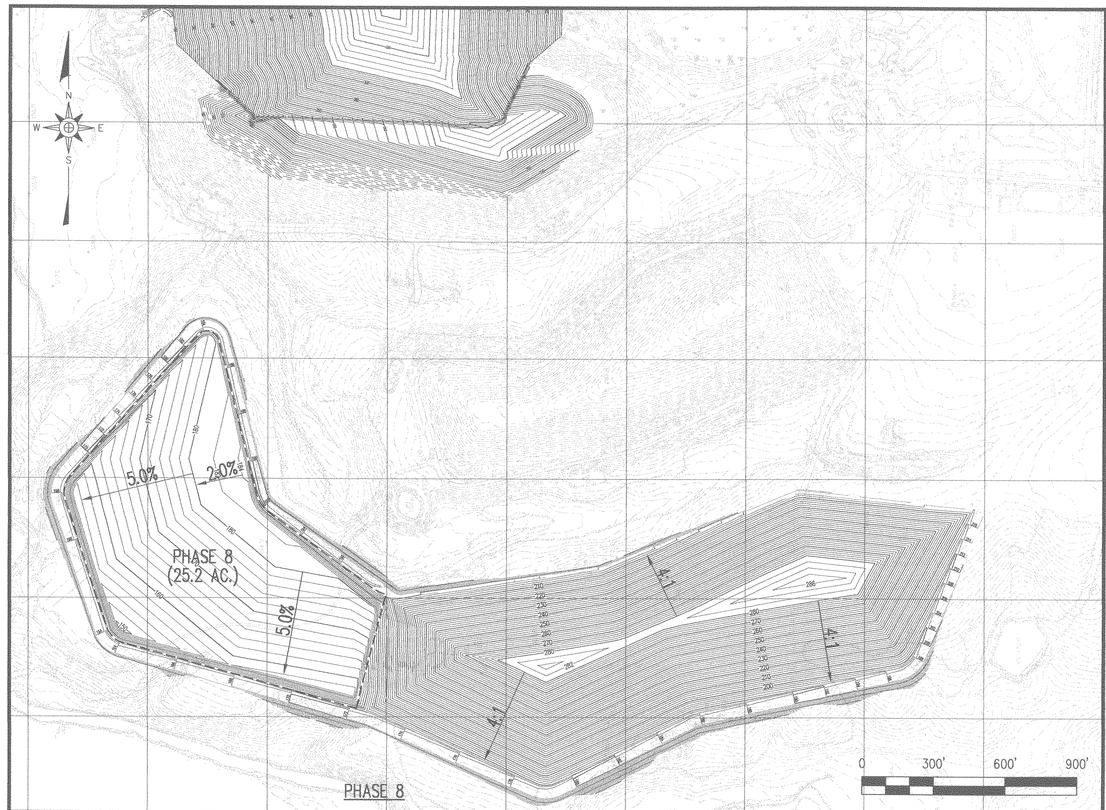

PHASE 8

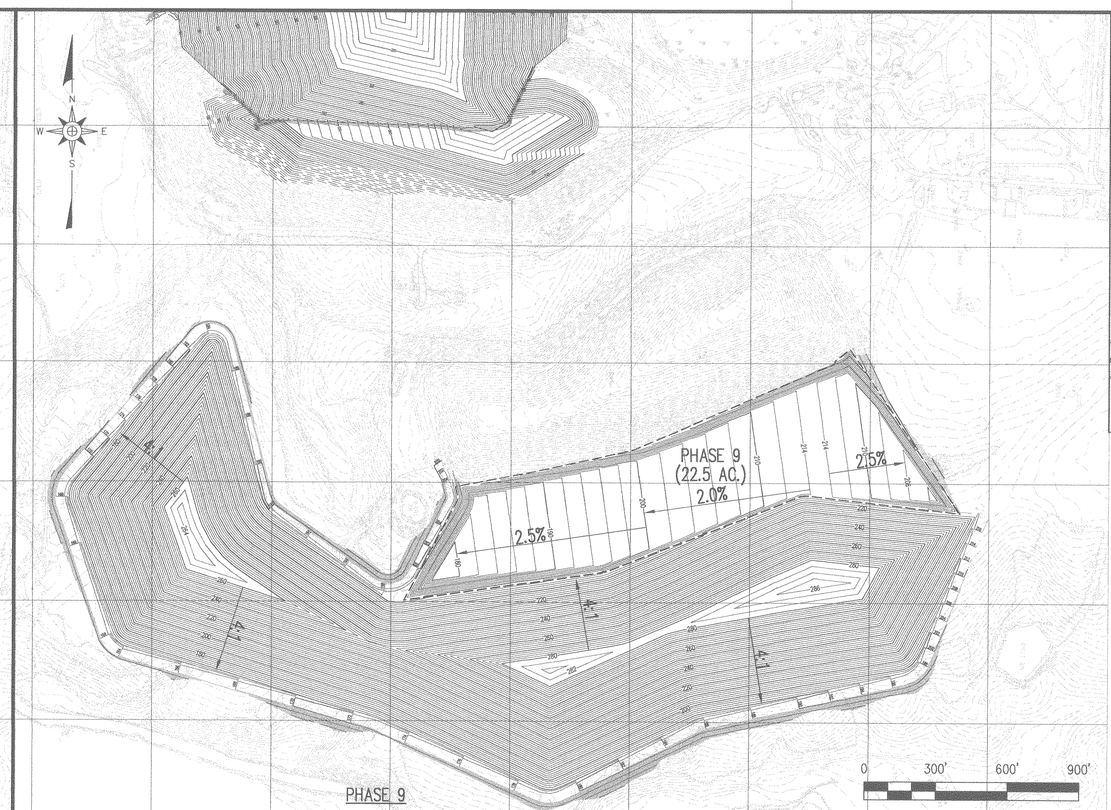

PHASE 9

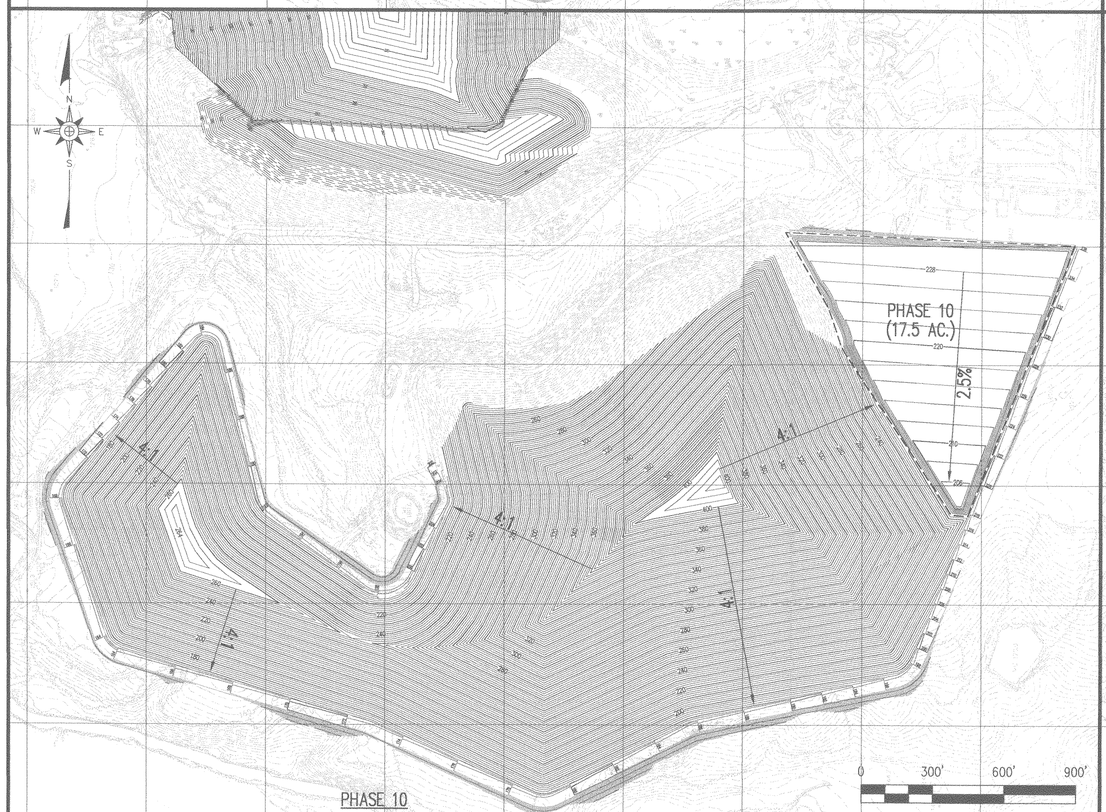

PHASE 10

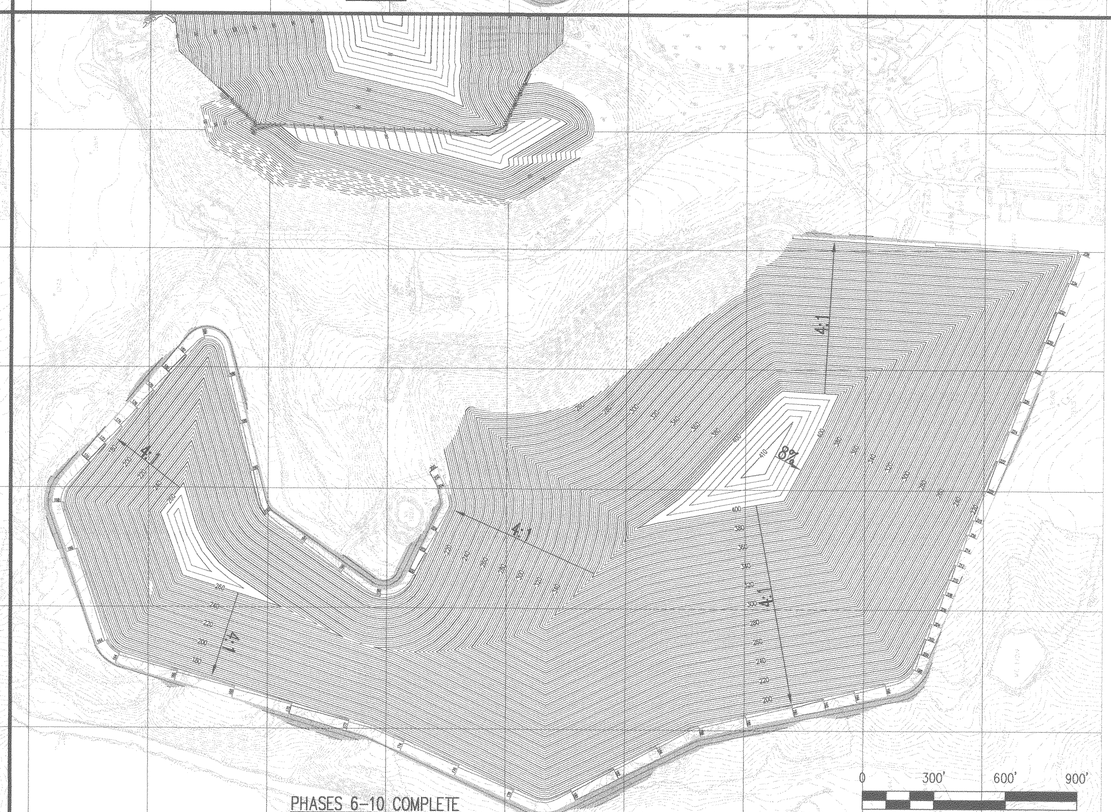

PHASES 6–10 COMPLETE

NO.	DATE	REVISION

G. N. RICHARDSON & ASSOCIATES, INC.
Engineering and Geological Services
14 N. Boylan Ave.
Raleigh, N.C. 27603
ph: 919-828-0577
fax: 919-828-3899
www.gnra.com

SEAL

SEAL

PROJECT TITLE:
JOHNSTON COUNTY C&D LANDFILL
AREA 2
PERMIT DRAWINGS

DRAWING TITLE:
MSW LANDFILL PHASING PLAN
(SHEET 2 OF 2)

DESIGNED BY: P.K.S.	DRAWN BY: J.A.L.
CHECKED BY:	PROJECT NO.: JOHN-22
SCALE: AS SHOWN	DATE: OCT. 2005
FILE NAME: JOHN-D0369	
SHEET NO. 25	DRAWING NO. P3

G:\CAD\Johnston\John-22\sheets\JOHN-D0369.dwg, 10/5/2005 10:09:18 AM