JACKSON COUNTY TRANSFER STATION

JACKSON COUNTY, NORTH CAROLINA

PROJECT NO. G07113

BOARD OF COMMISSIONERS

BRIAN MCMAHAN, CHAIRMAN
JOE COWAN, VICE CHAIRMAN
WILLIAM R. SHELTON
THOMAS L. "TOM" MASSIE
MARK R. JONES
EVELYN BAKER
W. PAUL HOLT

COUNTY MANAGER

KENNETH L. WESTMORELAND

SOLID WASTE DIRECTOR

CHAD PARKER

Engineer

Municipal Engineering Services Company, P.A.

Garner, N.C. ***Boone, N.C.***

by _____
Professional Engineer

PRELIMINARY
(NOT FOR CONSTRUCTION)
12/09/08

Municipal Services Engineering Company, P.A.
P.O. BOX 97 GARNER, N.C. 27529 (919) 772-5393
P.O. BOX 349 BOONE, N.C. 28607 (828) 262-1767
P.O. BOX 278 MOREHEAD CITY, N.C. 28557 (252) 726-9481

DATE	BY	REV.	DESCRIPTION

SCALE:	
DATE:	05/14/08
DRWN. BY:	M.SALIHU
CHKD. BY:	W. SULLIVAN
PROJECT NUMBER	G07113
DRAWING NO.	T-01
SHEET NO.	1 of 29

P:\SolidWaste\G07113-Jackson Co. Transfer Station\CAD\CD'S-G07113\G07113-01-T01.dwg, T-01, 1/7/2009 10:52:06 AM, kbussie, KB

GENERAL NOTES

SEE SHEET 3 OF 30 FOR GENERAL NOTES.

INDEX OF DRAWINGS

SHEET NO.	DRAWING NO.	DESCRIPTION	SHEET NO.	DRAWING NO.	DESCRIPTION
1	T-01	COVER SHEET	21	B-07	BUILDING ELEVATIONS
2	T-02	INDEX, VICINITY MAP, NOTES AND LEGENDS	22	B-08	SCALE HOUSE DETAILS
3	C-01	EXISTING CONDITIONS	23	B-09	SCALE HOUSE DETAILS
4	C-02	GRADING AND EROSION CONTROL PLAN	24	D-1	MISCELLANEOUS DETAILS
5	C-03	GRADING AND EROSION CONTROL PLAN	25	D-2	SITE DETAILS
6	C-04	SITE AND UTILITY PLAN	26	D-3	MISCELLANEOUS DETAILS
7	C-05	SITE AND UTILITY PLAN			
8	C-06	DRIVE #1 PROFILES			
9	C-07	DRIVE #2 PROFILES			
10	C-08	DRIVE #3 PROFILES			
11	C-09	FORCEMAIN PLAN AND PROFILES			
12	C-10	EROSION CONTROL AND STORM DRAINAGE DETAILS			
13	C-11	SITE DETAILS			
14	C-12	SITE DETAILS			
15	B-01	TRANSFER STATION ELEVATIONS			
16	B-02	BUILDING ELEVATIONS			
17	B-03	BUILDING ELEVATIONS			
18	B-04	ENLARGED PLANS AND DETAILS			
19	B-05	RETAINING WALL ELEVATIONS AND DETAILS			
20	B-06	SCALE HOUSE FLOOR PLAN			

VICINITY MAP

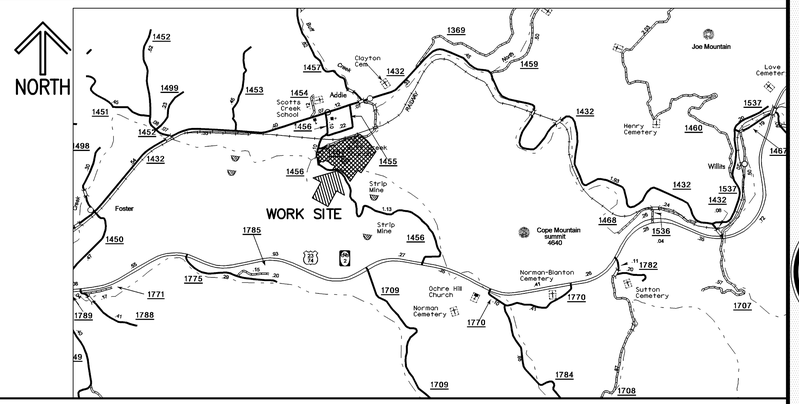

BUILDING CODE SUMMARY

NAME OF PROJECT: Duplin County Transfer Station
ADDRESS: 325 Landfill Road, Rose Hill North Carolina
PROPOSED USE: Solid Waste Transfer Station
OWNER: Duplin County PHONE #: (910) 289-3091
CODE ENFORCEMENT JURISDICTION: Duplin County

LEAD DESIGN PROFESSIONAL: JIMMY D. WOODIE

DESIGNER	FIRM	NAME	LICENSE #	TELEPHONE #
Architectural	Municipal Engineering	Jimmy D. Woodie	6282	(919) 772-5393
Civil	Municipal Engineering	Jimmy D. Woodie	6282	(919) 772-5393
Electrical	Stanford White Assoc.	Daniel Robertson	-----	(919) 832-8118
Fire Alarm		(NONE)		
Plumbing	Municipal Engineering	Jimmy D. Woodie	6282	(919) 772-5393
Mechanical	Municipal Engineering	Jimmy D. Woodie	6282	(919) 772-5393
Sprinkler-Standpipe		(NONE)		
Structural	HMC Consultants	Min-Chiang Hsu	11712	(919) 783-7288
Retaining Walls >5' High	HMC Consultants	Min-Chiang Hsu	11712	(919) 783-7288
Other		(NONE)		

YEAR EDITION OF CODE: 2002
New Construction

BUILDING DATA

Construction Type: II B

Mixed construction? YES

Sprinklers: NO

Standpipes: NO

Fire District NO

Building Height: 32 Ft. 1 STORY

Mezzanine: NO

High Rise? NO

Gross Building Area:

Floor	Existing (sq ft)	New (sq ft)	Subtotal
1st. floor	0	11,227 Sq. Ft.	11,227 Sq. Ft.
TOTAL:	0	11,227 Sq. Ft.	11,227 Sq. Ft.

ALLOWABLE AREA

Primary Occupancy: FACTORY, F1 – Allowable area per Table 503 15,500 sq. ft.

Secondary Occupancy: NONE

Special Occupancy: NONE

Mixed Occupancy: NO

ALLOWABLE HEIGHT

	Allowable (Table 503)	Increase for Sprinklers	Shown On Plans	Code Reference
Type of Construction	II B		IV	
Building Height in Feet	55	0	32	
Building Height in Stories	1	0	1	

FIRE PROTECTION REQUIREMENTS

Life Safety Plan Sheet #, if Provided

Building Element	Fire Separation Distance (Feet)	Rating Req'd	Rating Provided (w/ % Reduction)	Detail # And Sheet #	Design # For Rated Assembly	Design # For Rated Penetration	Design # For Rated Joints
Structural frame,including columns, girders,trusses	> 30 ft.	0					
Bearing walls							
Exterior							
North	> 30 ft.	0					
East	> 30 ft.	0					
West	> 30 ft.	0					
South	> 30 ft.	0					
Interior							
Nonbearing walls and partitions Exterior							
North	> 30 ft.	0					
East	> 30 ft.	0					
West	> 30 ft.	0					
South	> 30 ft.	0					
Floor construction, including supporting beams and joists		0					
Roof construction, including supporting beams and joists		0					
Shafts – Exit		N/A					
Shafts – Other		N/A					
Corridor Separation		N/A					
Occupancy Separation		N/A					
Party/Fire Wall Separation		N/A					
Smoke Barrier Separation		N/A					
Tenant Separation		N/A					

* Indicate section number permitting reduction

LIFE SAFETY SYSTEM REQUIREMENTS

Emergency Lighting: NO
Exit Signs: NO
Fire Alarm: NO
Smoke Detection Systems: NO
Panic Hardware: NO

EXIT REQUIREMENTS

NUMBER AND ARRANGEMENT OF EXITS

Floor, Room or Space Designation	Minimum 2 Number of Exits		Travel Distance		Arrangement Means of Egress 1,3 (Section 1004.1)	
	Required	Shown On Plans	Allowable Travel Distance (Table 1004.2.4)	Actual Distance Shown On Plans	Required Distance Between Exit Doors	Actual Distance Shown On Plans
Office	1	1	200 ft.	20 ft.		
Tipping Floor	2	2	200 ft.	96 ft.	66	70
Lower Level	2	2	200 ft.	25 ft.	27	51

1 Corridor Dead Ends (Section 1004.3.2.3)
2 Single Exits (Table 1005.2.2)
3 Common Path of Travel (Section 1004.2.5)

EXIT WIDTH

Floor, Room or Space Designation	(a) Area 1 sq. ft.	(b) Area Per Occupant (Table 1003.2.2.2)	(c) Egress Width Per Occupant (Table 1003.2.3)		Exit Width (in) 2,3,4,5,6 Required Width (Section 1003.2.3) (a ÷ b) x c		Actual Width Shown On Plans	
			Stair	Level	Stair	Level	Stair	Level
Office	936	100	0.3	0.2	44 in.	44 in.	N/A	N/A
Tipping Floor	10,000	100	0.3	0.2	44 in.	44 in.	N/A	N/A
Lower Level	1326	100	0.3	0.2	44 in.	44 in.	N/A	N/A

1. See Table 1003.2.2.2 to determine whether net or gross area is applicable. See definition "Area, Gross" and "Area, Net" (Section 1002)
2. The sprinkler increase per Section 506.3 is as folows:
   c. Multi-story building I_s = 200 percent
   d. Single story building I_s = 300 percent
3. Minimum stairway width (Section 1003.3.3); min. corridor width (Section 1004.3.2.2); min. door width (Section 1003.3.3.1)
4. Minimum width of exit passageway (Section 1005.3.3)
5. The loss of one means of egress shall not reduce the available capacity to less than 50 percent of the total required (Section 1103.2.3)
6. Assembly Occupancies (Section 1008)

STRUCTURAL DESIGN

DESIGN LOADS:

Importance Factors: Wind (I_W) 1.00
Snow (I_S) 1.00
Seismic (I_E) 1.00

Live Loads: Roof 20 psf
Mezzanine N/A psf
Floor 400 psf

Snow Load: 10 psf

Wind Load: Basic Wind Speed 110 mph (ASCE 7-98)
Exposure Category C
Wind Base Shears (for MWFRS) $V_x = 42^k$ $V_y = 33^k$

SEISMIC DESIGN CATEGORY A

Compliance with Section 1616.4 only? NO

SEISMIC DESIGN CATEGORY B, C & D

Seismic Use Group: I
Spectral Response Acceleration: S_{MS} 37.8 %g S_{M1} 25.3 %g
Site Classification: D
Basic Structural System: MOMENT FRAME
Seismic Base Shear: $V_x = 9.0^k$ $V_y = 9.0^k$
Analysis Procedure: EQUIVALANT LATERAL FORCE
Architectural, Mechanical Components anchored? YES

LATERAL DESIGN CONTROL: WIND

SOIL BEARING CAPACITIES:

Field Test (provide copy of test report): 2,000 psf
Pile size, type and capacity: N/A
Site Classification: N/A

PLUMBING FIXTURE REQUIREMENTS

Occupancy	Water Closets		Urinals	Lavatories		Showers/ Tubs	Drinking Fountains	
	Male	Female		Male	Female		Regular	Accessible

ACCESSIBLE PARKING

Lot or Parking Area	Total # of Parking Spaces		# of Accessible Spaces Provided		
	Required	Provided	Regular With 5' Access Aisle	Van Spaces With 8' Access Aisle	Total
Total					

SPECIAL APPROVALS

Special approval: (Local Jurisdiction, Department of Insurance, SBCCI, ICC, etc., describe below)

ENERGY SUMMARY

ENERGY REQUIREMENTS:

The following data shall be considered minimum and any special attribute required to meet the energy code shall also be provided. Each Designer shall furnish the required portions of the project information for the plan data sheet. If energy cost budget method, state the annual energy cost budget vs. allowable annual energy cost budget.

THERMAL ENVELOPE

Method of Compliance: Chapter 8

Roof/Ceiling Assembly (each assembly)
Description of assembly Gypsum board clg., fiberglass insulation, steel roof
U-Value of total assembly 0.033
R-Value of insulation 30
Skylights in each assembly No skylights
U-Value of skylight
total square footage of skylights in each assembly

Exterior Walls (each assembly)
Description of assembly Gypsum board, steel studs, rigid insulation continuous, steel siding
U-Value of total assembly 0.060
R-Value of insulation 15
Openings (windows or doors with glazing)
U-Value of assembly 0.69
shading coefficient 1.0
projection factor 1.0
low e required, if applicable Not required
Door R-Values 0.70

Walls adjacent to unconditioned space (each assembly)
Description of assembly Gypsum board, steel studs, rigid insulation, steel siding
U-Value of total assembly 0.060
R-Value of insulation 15
Openings (windows or doors with glazing)
U-Value of assembly 0.69
low e required, if applicable Not required
Door R-Values No doors

Walls below grade (each assembly)
Description of assembly
U-Value of total assembly
R-Value of insulation

Floors over unconditioned space (each assembly)
Description of assembly
U-Value of total assembly
R-Value of insulation

Floors slab on grade
Description of assembly 8" concrete slab
U-Value of total assembly 3.12
R-Value of insulation No insulation
Horizontal/vertical requirement Not heated
slab heated

ELECTRICAL SUMMARY

ELECTRICAL SYSTEM AND EQUIPMENT

Method of Compliance:

Lighting schedule
lamp type required in fixture
number of lamps in fixture
ballast type used in the fixture
number of ballasts in fixture
total wattage per fixture
total interior wattage specified vs. allowed
total exterior wattage specified vs. allowed

Equipment schedules with motors (not used for mechanical systems)
motor horsepower
number of phases
minimum efficiency
motor type
# of poles

MECHANICAL SUMMARY

MECHANICAL SYSTEMS, SERVICE SYSTEMS AND EQUIPMENT

Method of Compliance:

Thermal Zone
winter dry bulb
summer dry bulb

Interior design conditions
winter dry bulb
summer dry bulb
relative humidity

Building heating load

Building cooling load

Mechanical Spacing Conditioning System
Unitary
description of unit
heating efficiency
cooling efficiency
Boiler
total boiler output. If oversized state reason.
Chiller
total chiller capacity. If oversized state reason.

List equipment efficiencies

Equipment schedules with motors (mechanical systems)
motor horsepower
number of phases
minimum efficiency
motor type
# of poles

CONSTRUCTION SEQUENCE

SEE SHEET 3 OF 30 FOR CONSTRUCTION SEQUENCE.

THERMAL ENVELOPE

EXEMPT PER SECTION 101

DESIGNER STATEMENT:
To the best of my knowledge and belief, the design of this building complies with the thermal envelope requirements of the North Carolina State Building Code, Volume X-Energy.

SIGNED: _____
NAME: Jimmy D. Woodie
TITLE: Professional Engineer

LEGEND

SYMBOLS

SEE SHEETS C-01 THRU C-06.

ABBREVIATIONS

A.B.C.	AGGREGATE BASE COURSE	OHE	OVERHEAD ELECTRIC
CI	CAST IRON	PVC	POLYVINYL CHLORIDE
℄	CENTERLINE	RCP	REINFORCED CONCRETE PIPE
CL.	CLASS	SAN.	SANITARY
CPP	CORRUGATED PLASTIC PIPE	STA.	STATION
CONC.	CONCRETE	VERT.	VERTICAL
D.I.	DUCTILE IRON	W/	WITH
DIP	DUCTILE IRON PIPE	ELEV.	ELEVATION
EX.	EXISTING	FFE	FINISHED FLOOR ELEVATION
MAX.	MAXIMUM	R.O.W.	RIGHT OF WAY
MIN.	MINIMUM	S.R.	STATE ROUTE
MJ	MECHANICAL JOINT	TYP.	TYPICAL
NC	NORTH CAROLINA	NO.	NUMBER
NCDOT	NORTH CAROLINA DEPT. OF TRANSPORTATION		

LINETYPES

SEE SHEETS C-01 THRU C-06.

PRELIMINARY
(NOT FOR CONSTRUCTION)
12/09/08

SECTION AND DETAIL KEYING

DRAWINGS ARE CROSS REFERENCED IN THE FOLLOWING METHOD:

(A) A SECTION CUT ON DRAWING 3 IS IDENTIFIED AS FOLLOWS:

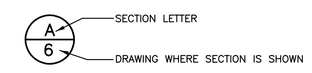

(B) THE SECTION SHOWN ON DRAWING 6 IS IDENTIFIED AS FOLLOWS:

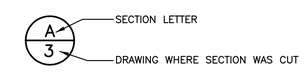

Municipal Services Engineering Company, P.A.
P.O. BOX 349 BOONE, N.C. 28607 (828) 262-1767
P.O. BOX 276 MOREHEAD CITY, N.C. 28557 (252) 726-9481
P.O. BOX 97 GARNER, N.C. 27529 (919) 772-5393

JACKSON COUNTY TRANSFER STATION
JACKSON COUNTY, NORTH CAROLINA

DATE	BY	REV.	DESCRIPTION
3-23-06	SDP	1	CHANGED GROSS BUILDING AREA NUMBERS PER D.O.I. REVIEW.

INDEX, VICINITY MAP NOTES AND LEGENDS

SCALE:
DATE: 05/14/08
DRWN. BY: M. SALIHU
CHKD. BY: W. SULLIVAN
PROJECT NUMBER G07113
DRAWING NO. T-02
SHEET NO. 2 of 29

P:\SolidWaste\G07113-Jackson Co. Transfer Station\CAD\CD'S-G07113\G07113-02-T02.dwg, Layout1, 1/7/2009 2:30:44 PM, kbussle, KB

EXIST MANHOLE
TOP= 2236.82
INV 2230.12

EX. RAILROAD BRIDGE

PROP. CLEARING LIMIT

EX. 1" STEEL PIPE TO MUNCH TO BE REMOVED

EX. POWER LINE

PROP. GUARDRAIL

PROP. RET. WALL

EX. SCALES TO BE REMOVED

EX. BLDG.

EX. WATER WELL APROXIMATE LOCATION

EX. 2" WATER LINE APPROXIMATE LOCATION

EX. LEACHATE TANK TO BE REMOVED

EX. FORCEMAIN APPROXIMATE LOCATION TO BE REMOVED

EX. PUMP STATION APPROXIMATE LOCATION

EX. BLDG

EX. 2" HYDRANT

EX. 2" PVC

EX. VAULT FOR METER AND BACKFLOW PREVENTER APROXIMATE LOCATION

TOTAL DISTURBED AREA = 6.95AC

LEGEND:

- EX.– PAVED ROADS
- EX.–CONT–MJR
- EX.–CONT–MINR
- EX.–OVERHEAD ELECTRIC
- EX.–TREELINE
- CLEARING LIMIT

PRELIMINARY
(NOT FOR CONSTRUCTION)
12/09/08

Municipal Services Engineering Company, P.A.
P.O. BOX 97 GARNER, N.C. 27529 (919) 772-5393
P.O. BOX 349 BOONE, N.C. 28607 (828) 262-1767
P.O. BOX 278 MOREHEAD CITY, N.C. 28557 (252) 726-9481

JACKSON COUNTY TRANSFER STATION

JACKSON COUNTY, NORTH CAROLINA

DATE	BY	REV.	DESCRIPTION

EXISTING CONNDITIONS

SCALE:	1" = 40'
DATE:	12/18/08
DRWN. BY:	M.SALIHU
CHKD. BY:	W. SULLIVAN
PROJECT NUMBER	G07113
DRAWING NO.	C–01
SHEET NO.	3 of 29

P:\SolidWaste\G07113-Jackson Co. Transfer Station\CAD\CD'S-G07113\G07113-03-C01.dwg, C-01, 1/7/2009 10:56:26 AM, kbussie, KB

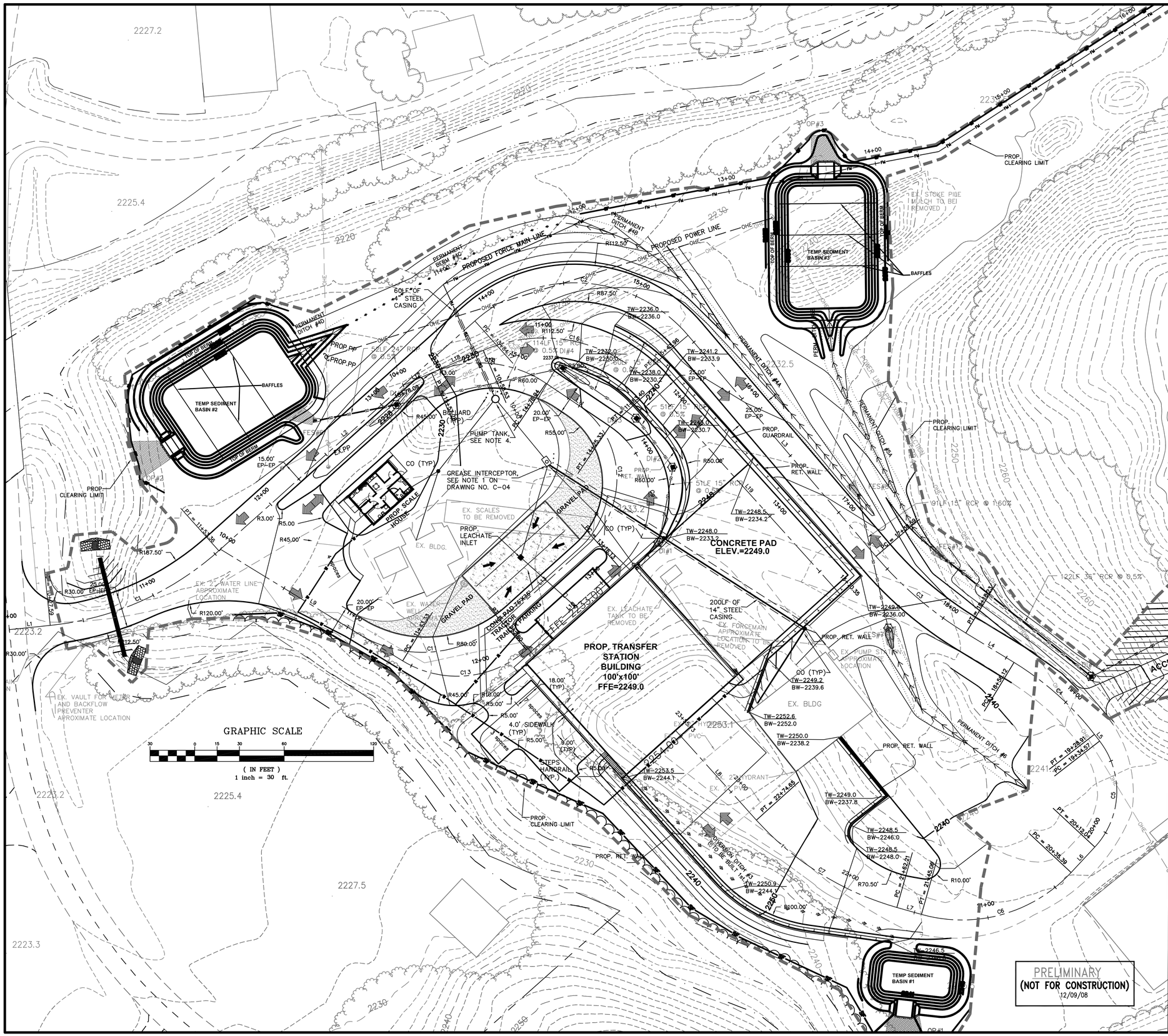

NOTE:
THE ANGLE FOR GRADED SLOPES AND FILLS SHALL BE NO GREATER THAN THE ANGLE THAT CAN BE RETAINED BY VEGETATIVE COVER OR OTHER ADEQUATE EROSION-CONTROL DEVICES OR STRUCTURES. IN ANY EVENT, SLOPES LEFT EXPOSED WILL, WITHIN 21 CALENDAR DAYS OF COMPLETION OF ANY PHASE OF GRADING, BE PLANTED OR OTHERWISE PROVIDED WITH TEMPORARY OR PERMANENT GROUND COVER, DEVICES, OR STRUCTURES SUFFICIENT TO RESTRAIN EROSION.

GENERAL NOTES

1.THE CONTRACTOR SHALL NOTIFY THE ENGINEER IMMEDIATELY SHOULD ANY FIELD CONDITIONS BE ENCOUNTERED THAT VARY FROM THE INFORMATION PROVIDED IN THE CONTRACT DOCUMENTS. LOCATIONS OF SHOWN UTILITIES ARE APPROXIMATE.
2. CONTRACTOR SHALL BE RESPONSIBLE FOR FIELD VERIFYING EXACT LOCATION AND ELEVATION OF ALL UTILITIES PRIOR TO EXCAVATION FOR THE PIPELINE.
3. BURIED TELEPHONE CABLES (FIBER OPTICS AND CONVENTIONAL) ARE KNOWN TO VARY DUE TO INSTALLATION TECHNIQUES. THE CONTRACTOR SHALL BE FULLY RESPONSIBLE FOR COORDINATING WITH THE UTILITY COMPANY TO DETERMINE SPECIFIC CABLE LOCATIONS. THE ENGINEER MUST BE NOTIFIED OF THE EXACT LOCATIONS AND ELEVATIONS OF THE CABLES WHEN IT APPEARS THAT MODIFICATIONS TO THE WATER SERVICE ALIGNMENT MAY BE NECESSARY. NOTIFICATION SHALL BE MADE WELL IN ADVANCE OF BORE AND JACK OPERATIONS. THE CONTRACTOR SHALL BE RESPONSIBLE FOR ALL COSTS ASSOCIATED WITH LOCATING OR REPAIRING BURIED CABLES ALONG THE WATER SERVICE ROUTE.
4. THE CONTRACTOR SHALL BE RESPONSIBLE FOR COORDINATING WITH THE LOCAL POWER COMPANY ANY ADDITIONAL SUPPORT OF EXISTING POWER POLES AS REQUIRED FOR CONSTRUCTION OPERATIONS. ALL COSTS OF SUCH WORK SHALL BE PAID BY THE CONTRACTOR. ELEVATIONS SHOWN ARE CONSISTENT WITH THE
5. NC GRID (NAD 83).
6. TYPICAL MINIMUM DEPTH OF COVER FOR BURIED WATERLINE SHALL BE 3 FEET UNLESS OTHERWISE SHOWN OR SPECIFIED. MAINTAIN 1'-6" MINIMUM CLEARANCE BETWEEN ALL
7. EXISTING PIPES CROSSED, UNLESS OTHERWISE NOTED.
8. EROSION AND SEDIMENTATION CONTROL DEVICES SHALL BE INSTALLED ACCORDING TO THE CON- TRACT DOCUMENTS AND AS DIRECTED BY THE ENGINEER. ALL DEVICES SHALL BE MAINTAINED SUCH THAT THEY FUNCTION AS INTENDED.
9. PROVIDE SEEDING AND MULCHING ON ALL DISTURBED AREAS. SPECIFICATIONS PROVIDED ON THIS SHEET. PROVIDE TEMPORARY LINER (STRAW AND NETTING) FOR
10 ALL DISTURBED DITCH LINES AS NOTED ON THE PLANS.
11. THE CONTRACTOR SHALL REMOVE AND REINSTALL ALL FENCE, MAILBOXES, ETC. AS REQUIRED FOR PIPE INSTALLATION. ANY ADDITIONAL FENCE MATERIALS REQUIRED SHALL BE PROVIDED BY THE CONTRACTOR AT NO ADDITIONAL COST TO THE OWNER.
12 PLACED RIP-RAP SHALL HAVE A MINIMUM DEPTH OF 18-INCHES AND SHALL HAVE A LAYER OF SYNTHETIC GEOTEXTILE FILTER FABRIC PLACED BETWEEN THE SOIL AND STONE.
13. ALL WORK TO COMPLY WITH NCDENR, COUNTY OF JAKSON REGULATIONS AND CODES, AND SHALL BE CONSISTENT WITH NCDOT REQUIREMENTS.

CONSTRUCTION SEQUENCE

1. CLEAR AND GRUB AREA NECESSARY FOR INSTALLATION OF GRAVEL CONSTRUCTION ENTRANCE.
2. INSTALL GRAVEL CONSTRUCTION ENTRANCE IN AREA AS SHOWN ON CONSTRUCTION PLANS.
3. CLEAR AND GRUB AREA NECESSARY FOR THE INSTALLATION OF SILT FENCING.
4. INSTALL SILT FENCING IN AREAS AS SHOWN ON CONSTRUCTION PLANS.
5. CLEAR AND GRUB AREA NECESSARY FOR INSTALLATION OF TEMPORARY SEDIMENT BASINS & PERMANENT DIVERSION DITCHES.
6. INSTALL TEMPORARY SEDIMENT BASINS AND PERMANENT DIVERSION DITCHES AS SHOWN ON CONSTRUCTION PLANS. 7. APPLY MULCH AND PERMANENT SEEDING TO ALL DISTURBED AREAS AS NECESSARY.
8. ALL EROSION AND SEDIMENT CONTROL DEVICES SHALL BE IN PLACE AND SEEDING APPLIED IN DISTURBED AREAS BEFORE CONSTRUCTION CAN BEGIN. SEEDING SHALL FOLLOW THE SEEDING SCHEDULES NOTED ON PLANS.
9. ALL EROSION AND SEDIMENT CONTROL DEVICES WILL BE INSPECTED WEEKLY AND AFTER RAINFALL EVENTS. NEEDED REPAIRS WILL BE MADE IMMEDIATELY.
10. AFTER SITE IS STABILIZED, REMOVE ALL TEMPORARY EROSION AND SEDIMENT CONTROL DEVICES AND SEED ACCORDINGLY. 11. ESTIMATED TIME FOR SITE STABILIZATION IS APPROXIMATELY 9 MONTHS.

LEGEND:

- EX. PAVED ROADS
- PROP. PAVED ROADS
- EX. CONT-MJR
- EX. CONT-MINR
- PROP. CONT-MJR
- PROP. CONT-MINR
- PROP. STORM LINE
- PROP. FORCEMAIN LINE
- PROP. WATER LINE
- PROP. DITCH FLOW
- EX. OVERHEAD ELECTRIC
- PROP. OVERHEAD ELECTRIC
- PROP CO (TYP) W/ SERVICE LINE
- EX. TREELINE
- PROP. TREELINE
- PROP. SILT FENCE
- PROP. CLEARING LIMIT
- PROP. PERMANENT DITCH
- PROP. INLET PROTECTION
- PROP. SOIL BORING LOCATIONS

Municipal Services Engineering Company, P.A.
P.O. BOX 37 GARNER, N.C. 27529 (919) 772-5393
P.O. BOX 278 MOREHEAD CITY, N.C. 28557 (252) 726-9481
P.O. BOX 348 BOONE, N.C. 28607 (828) 262-1767

JACKSON COUNTY TRANSFER STATION

JACKSON COUNTY, NORTH CAROLINA

DATE	BY	REV.	DESCRIPTION

GRADING AND EROSION CONTROL PLAN

SCALE:	1" = 30'
DATE:	06/25/08
DRWN. BY:	M.SALIHU
CHKD. BY:	W. SULLIVAN
PROJECT NUMBER	G07113
DRAWING NO.	C-02
SHEET NO.	4 of 29

P:\SolidWaste\G07113-Jackson Co. Transfer Station\CAD\CDS-G07113\G07113-04-C02.dwg, C-02, 1/7/2009 10:58:58 AM, kbussie, KB

SEEDBED PREPARATION (SP)

SP–1 Fill slopes 3:1 or steeper to be seeded with a hydraulic seeder (permanent seeding)
1) Leave the last 4–6 inches of fill loose and uncompacted, allowing rocks, roots, large clods and other debris to remain on the slope.
2) Roughen slope faces by making grooves 2–3 inches deep, perpendicular to the slope.
3) Spread lime evenly over slopes at rates recommended by soil tests.
SP–2 Fill slopes 3:1 or steeper (temporary seedings)
1) Leave a loose, uncompacted surface. Remove large clods, rocks, and debris which might hold netting above the surface.
2) Spread lime and fertilizer evenly at rates recommended by soil tests.
3) Break up large clods and rake into a loose, uniform seedbed.
4) Rake to loosen surface just prior to applying seed.
SP–4 Gentle or flat slopes where topsoil is not used (grassed ditches)
1) Remove rocks and debris.
2) Apply lime and fertilizer at rates recommended by soil tests; spread evenly and incorporate into the top 6" with a disk, chisel plow, or rotary tiller.
3) Break up large clods and rake into a loose, uniform seedbed.
4) Rake to loosen surface just prior to applying seed.

SEEDING METHODS (SM)

SM–1 Fill slopes steeper than 3:1 (permanent seeding)
Use hydraulic seeding equipment to apply seed and fertilizer, a wood fiber mulch at 45 lb./1,000 s.f., and mulch tackifer.
SM–2 Gentle to flat slopes or temporary seedings
1) Broadcast seed at the recommended rate with a cyclone seeder, drop spreader, or cultipacker seeder.
2) Rake seed into the soil and lightly pack to establish good contact.

MULCH (MU)

MU–1 Steep slopes (3:1 or greater) In mid–summer, late fall or winter, apply 100 lb./1,000 s.f. grain straw, cover with netting and staple to the slope. In spring or early fall use 45 lb. / 1,000 s.f. wood fiber in a hydroseeder slurry.
MU–2 High–maintenance vegetation and temporary seedings. Apply 90 lb./1,000 s.f. (4000 lb./acre) grain straw and tack with 0.1 gal./s.y. asphalt (11 gal./1,000 s.f.).
MU–3 Grass–lined channels Install excelsior mat in the channel, extend up the channel banks to the highest calculated depth of flow, and secure according to manufacturer's specifications. On channel shoulders, apply 100 lb./1,000 s.f. grain straw and anchor with 0.1 gal./s.y. (11 gal./1,000 s.f.) asphalt.

MAINTENANCE (MA)

MA–1 Refertilize in late winter or early spring the following year. Mow as desired.
MA–3 Inspect and repair mulch and lining. Refertilize in late winter of the following year with 150 lb./acre 10–10–10 (3.5 lb./1,000 s.f.). Mow regularly to a height of 3–4 inches.
MA–4 Topdress with 10–10–10 fertilizer if growth is not fully adequate.
MA–5 Topdress with 50 lb./acre (1 lb./1,000 s.f.) nitrogen in March. If cover is needed through the following summer, overseed with 50 lb./acre Kobe lespedeza.

CONSTRUCTION SEQUENCE

1. CLEAR AND GRUB AREA NECESSARY FOR INSTALLATION OF GRAVEL CONSTRUCTION ENTRANCE.
2. INSTALL GRAVEL CONSTRUCTION ENTRANCE IN AREA AS SHOWN ON CONSTRUCTION PLANS.
3. CLEAR AND GRUB AREA NECESSARY FOR THE INSTALLATION OF SILT FENCING.
4. INSTALL SILT FENCING IN AREAS AS SHOWN ON CONSTRUCTION PLANS.
5. CLEAR AND GRUB AREA NECESSARY FOR INSTALLATION OF TEMPORARY SEDIMENT BASINS & PERMANENT DIVERSION DITCHES.
6. INSTALL TEMPORARY SEDIMENT BASINS AND PERMANENT DIVERSION DITCHES AS SHOWN ON CONSTRUCTION PLANS. 7. APPLY MULCH AND PERMANENT SEEDING TO ALL DISTURBED AREAS AS NECESSARY.
8. ALL EROSION AND SEDIMENT CONTROL DEVICES SHALL BE IN PLACE AND SEEDING APPLIED IN DISTURBED AREAS BEFORE CONSTRUCTION CAN BEGIN. SEEDING SHALL FOLLOW THE SEEDING SCHEDULES NOTED ON PLANS.
9. ALL EROSION AND SEDIMENT CONTROL DEVICES WILL BE INSPECTED WEEKLY AND AFTER RAINFALL EVENTS. NEEDED REPAIRS WILL BE MADE IMMEDIATELY.
10. AFTER SITE IS STABILIZED, REMOVE ALL TEMPORARY EROSION AND SEDIMENT CONTROL DEVICES AND SEED ACCORDINGLY. 11. ESTIMATED TIME FOR SITE STABILIZATION IS APPROXIMATELY 9 MONTHS.

NOTE:

THE ANGLE FOR GRADED SLOPES AND FILLS SHALL BE NO GREATER THAN THE ANGLE THAT CAN BE RETAINED BY VEGETATIVE COVER OR OTHER ADEQUATE EROSION-CONTROL DEVICES OR STRUCTURES. IN ANY EVENT, SLOPES LEFT EXPOSED WILL, WITHIN 21 CALENDAR DAYS OF COMPLETION OF ANY PHASE OF GRADING, BE PLANTED OR OTHERWISE PROVIDED WITH TEMPORARY OR PERMANENT GROUND COVER, DEVICES, OR STRUCTURES SUFFICIENT TO RESTRAIN EROSION.

LEGEND:

- EX. PAVED ROADS
- PROP. PAVED ROADS
- EX. CONT–MJR
- EX. CONT–MINR
- PROP. CONT–MJR
- PROP. CONT–MINR
- PROP. STORM LINE
- PROP. FORCEMAIN LINE
- PROP. WATER LINE
- PROP. DITCH FLOW
- EX. OVERHEAD ELECTRIC
- PROP. OVERHEAD ELECTRIC
- PROP CO (TYP) W/ SERVICE LINE
- EX. TREELINE
- PROP. TREELINE
- PROP. SILT FENCE
- PROP. CLEARING LIMIT
- PROP. PERMANENT DITCH
- PROP. INLET PROTECTION
- PROP. SOIL BORING LOCATIONS

Temporary Seeding Recommendations for Fall

Seeding Mixture

species	Rate(lb./acre)
Rye (grain)	120

SEEDING DATES
Mountains–Aug.15 – Dec. 15
Coastal Plain and Piedmont–Aug. 15 – Dec. 30

SOIL AMENDMENTS
Follow recommendations of soil tests or apply 2,000 lb./acre ground agricultural limestone and 1,000 lb./acre 10–10–10 fertilizer.

MULCH
Apply 4,000 lb./acre straw. Anchor straw by tacking with asphalt, straight can be used as a mulching tool.

MAINTENANCE
Repair and refertilize damaged areas immediately. Topdress with netting, or a mulch anchoring tool. A disk with blades set nearly 50 lb./acre of nitrogen in March. If it is necessary to extend temporary cover beyond June 15, overseed with 50 lb./acre Kobe (Piedmont and Coastal Plain) or Korean (Mountains)lespedeza in late February or early March.

NC Department of Transportation Permanent Seeding Specifications

Permanent erosion control shall be performed as follows:

(a) All disturbed areas will be dressed to typical sections and plowed to a depth of 5 inches. The top 2 inches shall be pulverized to provide a uniform seed.

NOTE: Lime should be applied before plowing operation.

(b) Lime, seed, and fertilizer shall be applied with necessary equipment to give uniform distribution of these materials. The hand–bucket method is not acceptable. The following are rates and kinds of these materials to be applied per acre:

75 lbs. Ky 31 Fescue
50 lbs. Pensacola Bahiagrass
50 lbs. Korean Lespedeza
1,000 lbs. 5–10–10 Fertilizer
4,000 lbs. Agricultural Limestone

NOTE: Only tested and certified seed shall be used. Seed certification shall be provided to the District Engineer prior to use.

(c) Seeded area shall be cultipacked to firm seedbed and cover seed.

(d) Grain straw shall be applied over seeded areas as a mulch. No bare ground shall be visible when riding by a mulched area if proper application is achieve. Thick clumps of straw are not permissible, as uniform coverage is expected.

(e) Mulched area shall be tacked with asphalt sufficient to hold straw in place.

(f) Ditch treatment shall be used in areas where steep grades (more than 10%) could cause ditch erosion. Use of jute mesh, excelsior matting, or fiberglass roving is acceptable. Ditch treatment should be installed before mulching operation.

Municipal Services Engineering Company, P.A.
P.O. BOX 37 GARNER, N.C. 27529 (919) 772-5393
P.O. BOX 348 BOONE, N.C. 28607 (828) 262-1767
P.O. BOX 278 MOREHEAD CITY, N.C. 28557 (252) 726-9481

JACKSON COUNTY TRANSFER STATION

JACKSON COUNTY, NORTH CAROLINA

DATE	BY	REV.	DESCRIPTION
3-23-06	SDP	1	ADDED HANDICAP ACCESSIBLE RAMP.

GRADING AND EROSION CONTROL PLAN

SCALE:	1" =30'
DATE:	06/25/08
DRWN. BY:	M. SALIHU
CHKD. BY:	W. SULLIVAN
PROJECT NUMBER	G07113
DRAWING NO.	C–03
SHEET NO.	5 of 29

P:\SolidWaste\G07113-Jackson Co. Transfer Station\CAD\CD'S-G07113\G07113-06-C03.dwg, C-03, 1/7/2009 11:01:34 AM, kbussie, KB

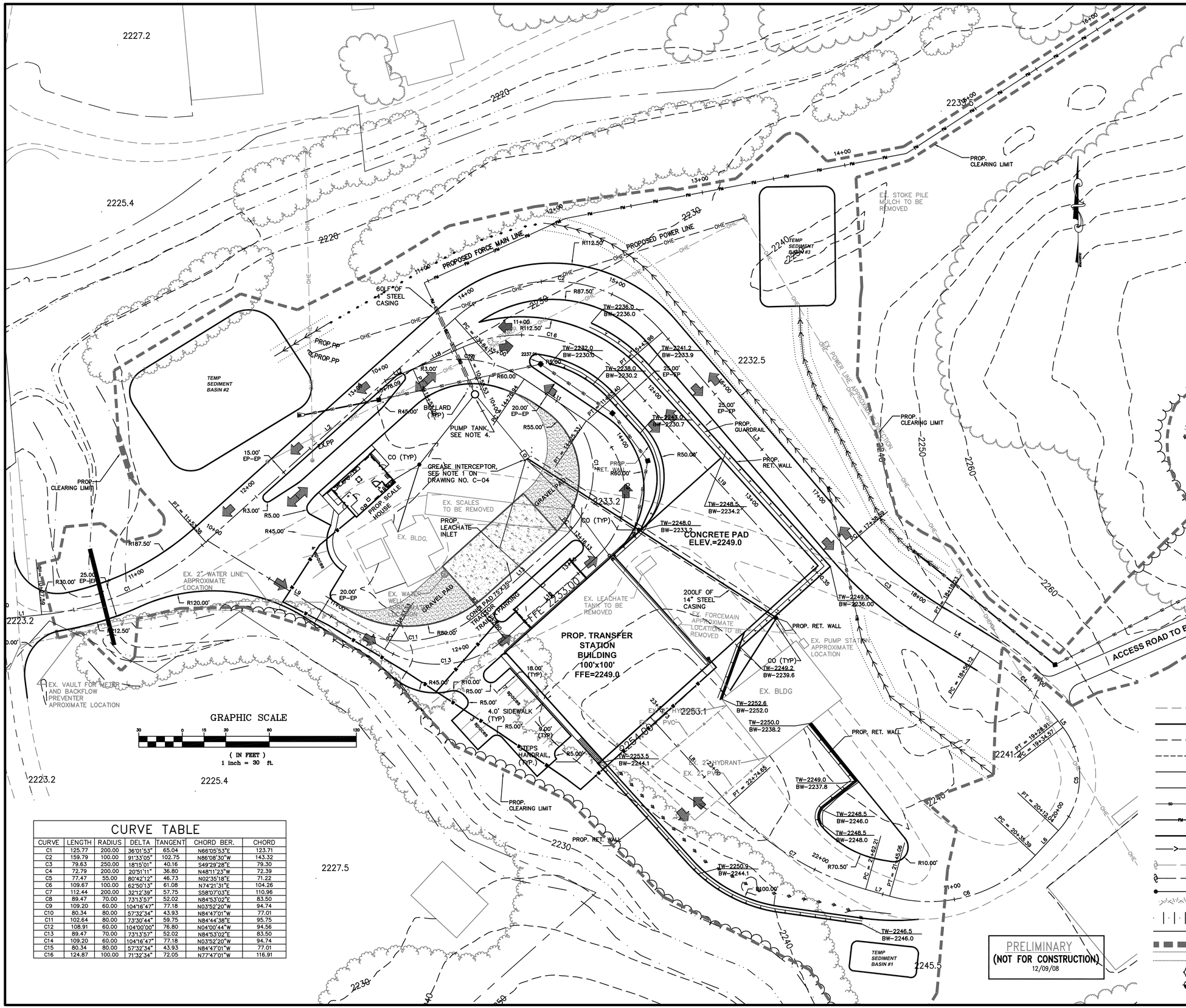

PRELIMINARY
(NOT FOR CONSTRUCTION)
12/09/08

GENERAL NOTES

1.THE CONTRACTOR SHALL NOTIFY THE ENGINEER IMMEDIATELY SHOULD ANY FIELD CONDITIONS BE ENCOUNTERED THAT VARY FROM THE INFORMATION PROVIDED IN THE CONTRACT DOCUMENTS. LOCATIONS OF SHOWN UTILITIES ARE APPROXIMATE.
2. CONTRACTOR SHALL BE RESPONSIBLE FOR FIELD VERIFYING EXACT LOCATION AND ELEVATION OF ALL UTILITIES PRIOR TO EXCAVATION FOR THE PIPELINE.
3. BURIED TELEPHONE CABLES (FIBER OPTICS AND CONVENTIONAL) ARE KNOWN TO VARY DUE TO INSTALLATION TECHNIQUES. THE CONTRACTOR SHALL BE FULLY RESPONSIBLE FOR COORDINATING WITH THE UTILITY COMPANY TO DETERMINE SPECIFIC CABLE LOCATIONS. THE ENGINEER MUST BE NOTIFIED OF THE EXACT LOCATIONS AND ELEVATIONS OF THE CABLES WHEN IT APPEARS THAT MODIFICATIONS TO THE WATER SERVICE ALIGNMENT MAY BE NECESSARY. NOTIFICATION SHALL BE MADE WELL IN ADVANCE OF BORE AND JACK OPERATIONS. THE CONTRACTOR SHALL BE RESPONSIBLE FOR ALL COSTS ASSOCIATED WITH LOCATING OR REPAIRING BURIED CABLES ALONG THE WATER SERVICE ROUTE.
4. THE CONTRACTOR SHALL BE RESPONSIBLE FOR COORDINATING WITH THE LOCAL POWER COMPANY ANY ADDITIONAL SUPPORT OF EXISTING POWER POLES AS REQUIRED FOR CONSTRUCTION OPERATIONS. ALL COSTS OF SUCH WORK SHALL BE PAID BY THE CONTRACTOR. ELEVATIONS SHOWN ARE CONSISTENT WITH THE
5. NC GRID (NAD 83).
6. TYPICAL MINIMUM DEPTH OF COVER FOR BURIED WATERLINE SHALL BE 3 FEET UNLESS OTHERWISE SHOWN OR SPECIFIED. MAINTAIN 1'-6" MINIMUM CLEARANCE BETWEEN ALL
7. EXISTING PIPES CROSSED, UNLESS OTHERWISE NOTED.
8. EROSION AND SEDIMENTATION CONTROL DEVICES SHALL BE INSTALLED ACCORDING TO THE CON- TRACT DOCUMENTS AND AS DIRECTED BY THE ENGINEER. ALL DEVICES SHALL BE MAINTAINED SUCH THAT THEY FUNCTION AS INTENDED.
9. PROVIDE SEEDING AND MULCHING ON ALL DISTURBED AREAS. SPECIFICATIONS PROVIDED ON THIS SHEET. PROVIDE TEMPORARY LINER (STRAW AND NETTING) FOR
10 ALL DISTURBED DITCH LINES AS NOTED ON THE PLANS.
11. THE CONTRACTOR SHALL REMOVE AND REINSTALL ALL FENCE, MAILBOXES, ETC. AS REQUIRED FOR PIPE INSTALLATION. ANY ADDITIONAL FENCE MATERIALS REQUIRED SHALL BE PROVIDED BY THE CONTRACTOR AT NO ADDITIONAL COST TO THE OWNER.
12 PLACED RIP-RAP SHALL HAVE A MINIMUM DEPTH OF 18-INCHES AND SHALL HAVE A LAYER OF SYNTHETIC GEOTEXTILE FILTER FABRIC PLACED BETWEEN THE SOIL AND STONE.
13. ALL WORK TO COMPLY WITH NCDENR, COUNTY OF JAKSON REGULATIONS AND CODES, AND SHALL BE CONSISTENT WITH NCDOT REQUIREMENTS.

LEGEND:

- EX. PAVED ROADS
- PROP. PAVED ROADS
- EX. CONT-MJR
- EX. CONT-MINR
- PROP. CONT-MJR
- PROP. CONT-MINR
- PROP. STORM LINE
- PROP. FORCEMAIN LINE
- PROP. WATER LINE
- PROP. DITCH FLOW
- EX. OVERHEAD ELECTRIC
- PROP. OVERHEAD ELECTRIC
- PROP CO (TYP) W/ SERVICE LINE
- EX. TREELINE
- PROP. TREELINE
- PROP. SILT FENCE
- PROP. CLEARING LIMIT
- PROP. PERMANENT DITCH
- PROP. INLET PROTECTION
- PROP. SOIL BORING LOCATIONS

CURVE TABLE

CURVE	LENGTH	RADIUS	DELTA	TANGENT	CHORD BER.	CHORD
C1	125.77	200.00	36°01'53"	65.04	N66°05'53"E	123.71
C2	159.79	100.00	91°33'05"	102.75	N86°08'30"W	143.32
C3	79.63	250.00	18°15'01"	40.16	S49°29'28"E	79.30
C4	72.79	200.00	20°51'11"	36.80	N48°11'23"W	72.39
C5	77.47	55.00	80°42'12"	46.73	N02°35'18"E	71.22
C6	109.67	100.00	62°50'13"	61.08	N74°21'31"E	104.26
C7	112.44	200.00	32°12'39"	57.75	S58°07'03"E	110.96
C8	89.47	70.00	73°13'57"	52.02	N84°53'02"E	83.50
C9	109.20	60.00	104°16'47"	77.18	N03°52'20"W	94.74
C10	80.34	80.00	57°32'34"	43.93	N84°47'01"W	77.01
C11	102.64	80.00	73°30'44"	59.75	N84°44'38"E	95.75
C12	108.91	60.00	104°00'00"	76.80	N04°00'44"W	94.56
C13	89.47	70.00	73°13'57"	52.02	N84°53'02"E	83.50
C14	109.20	60.00	104°16'47"	77.18	N03°52'20"W	94.74
C15	80.34	80.00	57°32'34"	43.93	N84°47'01"W	77.01
C16	124.87	100.00	71°32'34"	72.05	N77°47'01"W	116.91

Municipal Services
P.O. BOX 97 GARNER, N.C. 27529
(919) 772-5393

Engineering Company, P.A.
P.O. BOX 349 BOONE, N.C. 28607
(828) 262-1767
P.O. BOX 278 MOREHEAD CITY, N.C. 28557
(252) 726-9481

JACKSON COUNTY TRANSFER STATION
JACKSON COUNTY, NORTH CAROLINA

DATE	BY	REV.	DESCRIPTION

SITE AND UTILITY PLAN

SCALE:	1" = 30'
DATE:	06/25/08
DRWN. BY:	M.SALIHU
CHKD. BY:	W. SULLIVAN
PROJECT NUMBER	G07113
DRAWING NO.	C-04
SHEET NO.	6 of 29

P:\SolidWaste\G07113-Jackson Co. Transfer Station\CAD\CD'S-G07113\G07113-06-C04.dwg, C-04, 1/7/2009 11:04:34 AM, kbussie, KB

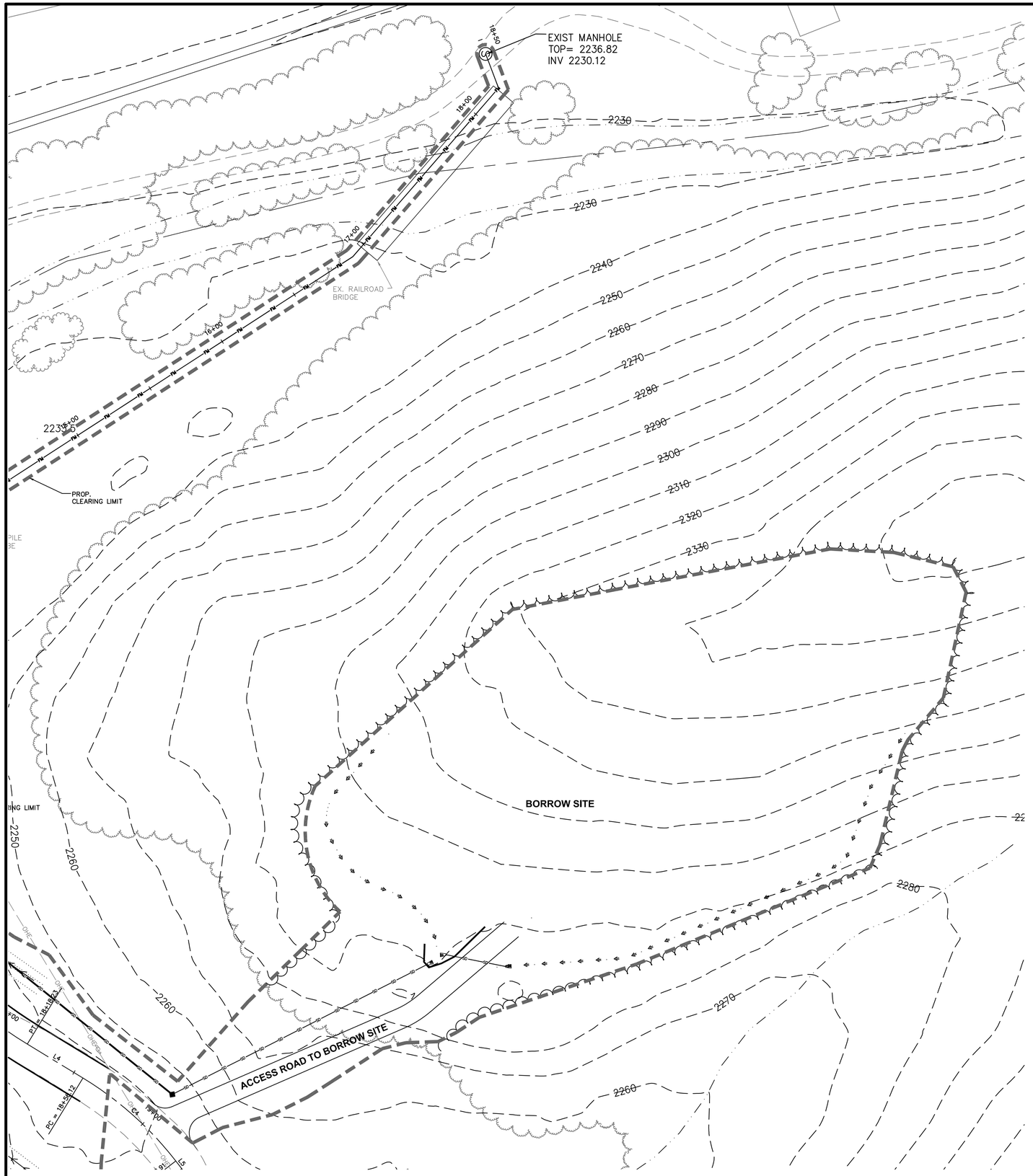

GENERAL NOTES

1. THE CONTRACTOR SHALL NOTIFY THE ENGINEER IMMEDIATELY SHOULD ANY FIELD CONDITIONS BE ENCOUNTERED THAT VARY FROM THE INFORMATION PROVIDED IN THE CONTRACT DOCUMENTS. LOCATIONS OF SHOWN UTILITIES ARE APPROXIMATE.
2. CONTRACTOR SHALL BE RESPONSIBLE FOR FIELD VERIFYING EXACT LOCATION AND ELEVATION OF ALL UTILITIES PRIOR TO EXCAVATION FOR THE PIPELINE.
3. BURIED TELEPHONE CABLES (FIBER OPTICS AND CONVENTIONAL) ARE KNOWN TO VARY DUE TO INSTALLATION TECHNIQUES. THE CONTRACTOR SHALL BE FULLY RESPONSIBLE FOR COORDINATING WITH THE UTILITY COMPANY TO DETERMINE SPECIFIC CABLE LOCATIONS. THE ENGINEER MUST BE NOTIFIED OF THE EXACT LOCATIONS AND ELEVATIONS OF THE CABLES WHEN IT APPEARS THAT MODIFICATIONS TO THE WATER SERVICE ALIGNMENT MAY BE NECESSARY. NOTIFICATION SHALL BE MADE WELL IN ADVANCE OF BORE AND JACK OPERATIONS. THE CONTRACTOR SHALL BE RESPONSIBLE FOR ALL COSTS ASSOCIATED WITH LOCATING OR REPAIRING BURIED CABLES ALONG THE WATER SERVICE ROUTE.
4. THE CONTRACTOR SHALL BE RESPONSIBLE FOR COORDINATING WITH THE LOCAL POWER COMPANY ANY ADDITIONAL SUPPORT OF EXISTING POWER POLES AS REQUIRED FOR CONSTRUCTION OPERATIONS. ALL COSTS OF SUCH WORK SHALL BE PAID BY THE CONTRACTOR. ELEVATIONS SHOWN ARE CONSISTENT WITH THE
5. NC GRID (NAD 83).
6. TYPICAL MINIMUM DEPTH OF COVER FOR BURIED WATERLINE SHALL BE 3 FEET UNLESS OTHERWISE SHOWN OR SPECIFIED. MAINTAIN 1'-6" MINIMUM CLEARANCE BETWEEN ALL
7. EXISTING PIPES CROSSED, UNLESS OTHERWISE NOTED.
8. EROSION AND SEDIMENTATION CONTROL DEVICES SHALL BE INSTALLED ACCORDING TO THE CON- TRACT DOCUMENTS AND AS DIRECTED BY THE ENGINEER. ALL DEVICES SHALL BE MAINTAINED SUCH THAT THEY FUNCTION AS INTENDED.
9. PROVIDE SEEDING AND MULCHING ON ALL DISTURBED AREAS. SPECIFICATIONS PROVIDED ON THIS SHEET. PROVIDE TEMPORARY LINER (STRAW AND NETTING) FOR
10 ALL DISTURBED DITCH LINES AS NOTED ON THE PLANS.
11. THE CONTRACTOR SHALL REMOVE AND REINSTALL ALL FENCE, MAILBOXES, ETC. AS REQUIRED FOR PIPE INSTALLATION. ANY ADDITIONAL FENCE MATERIALS REQUIRED SHALL BE PROVIDED BY THE CONTRACTOR AT NO ADDITIONAL COST TO THE OWNER.
12 PLACED RIP-RAP SHALL HAVE A MINIMUM DEPTH OF 18-INCHES AND SHALL HAVE A LAYER OF SYNTHETIC GEOTEXTILE FILTER FABRIC PLACED BETWEEN THE SOIL AND STONE.
13. ALL WORK TO COMPLY WITH NCDENR, COUNTY OF JAKSON REGULATIONS AND CODES, AND SHALL BE CONSISTENT WITH NCDOT REQUIREMENTS.

LEGEND:

- EX. PAVED ROADS
- PROP. PAVED ROADS
- EX. CONT-MJR
- EX. CONT-MINR
- PROP. CONT-MJR
- PROP. CONT-MINR
- PROP. STORM LINE
- PROP. FORCEMAIN LINE
- PROP. WATER LINE
- PROP. DITCH FLOW
- EX. OVERHEAD ELECTRIC
- PROP. OVERHEAD ELECTRIC
- PROP CO (TYP) W/ SERVICE LINE
- EX. TREELINE
- PROP. TREELINE
- PROP. SILT FENCE
- PROP. CLEARING LIMIT
- PROP. PERMANENT DITCH
- PROP. INLET PROTECTION
- PROP. SOIL BORING LOCATIONS

Municipal Services Engineering Company, P.A.
P.O. BOX 97 GARNER, N.C. 27529 (919) 772-5393
P.O. BOX 349 BOONE, N.C. 28607 (828) 262-1767
P.O. BOX 278 MOREHEAD CITY, N.C. 28557 (252) 726-9481

JACKSON COUNTY TRANSFER STATION
JACKSON COUNTY, NORTH CAROLINA

DATE	BY	REV.	DESCRIPTION
3-23-06	SDP	1	ADDED HANDICAP ACCESSIBLE RAMP.

SITE AND UTILITY PLAN

SCALE: 1" =30'
DATE: 06/25/08
DRWN. BY: M. SALIHU
CHKD. BY: W. SULLIVAN
PROJECT NUMBER G07113
DRAWING NO. C-5
SHEET NO. 7 of 29

P:\SolidWaste\G07113-Jackson Co. Transfer Station\CADD\G-G07113\G07113-07-C05.dwg, C-05, 1/7/2009 11:13:01 AM, kbussie, KB

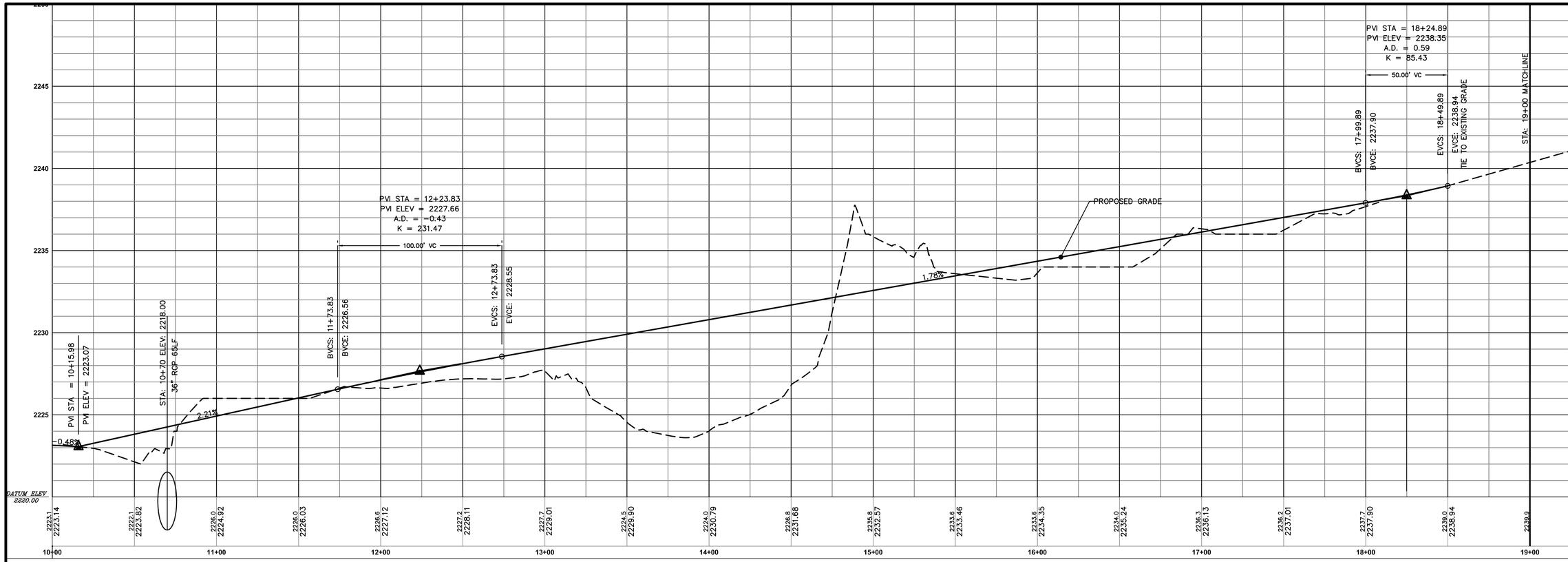

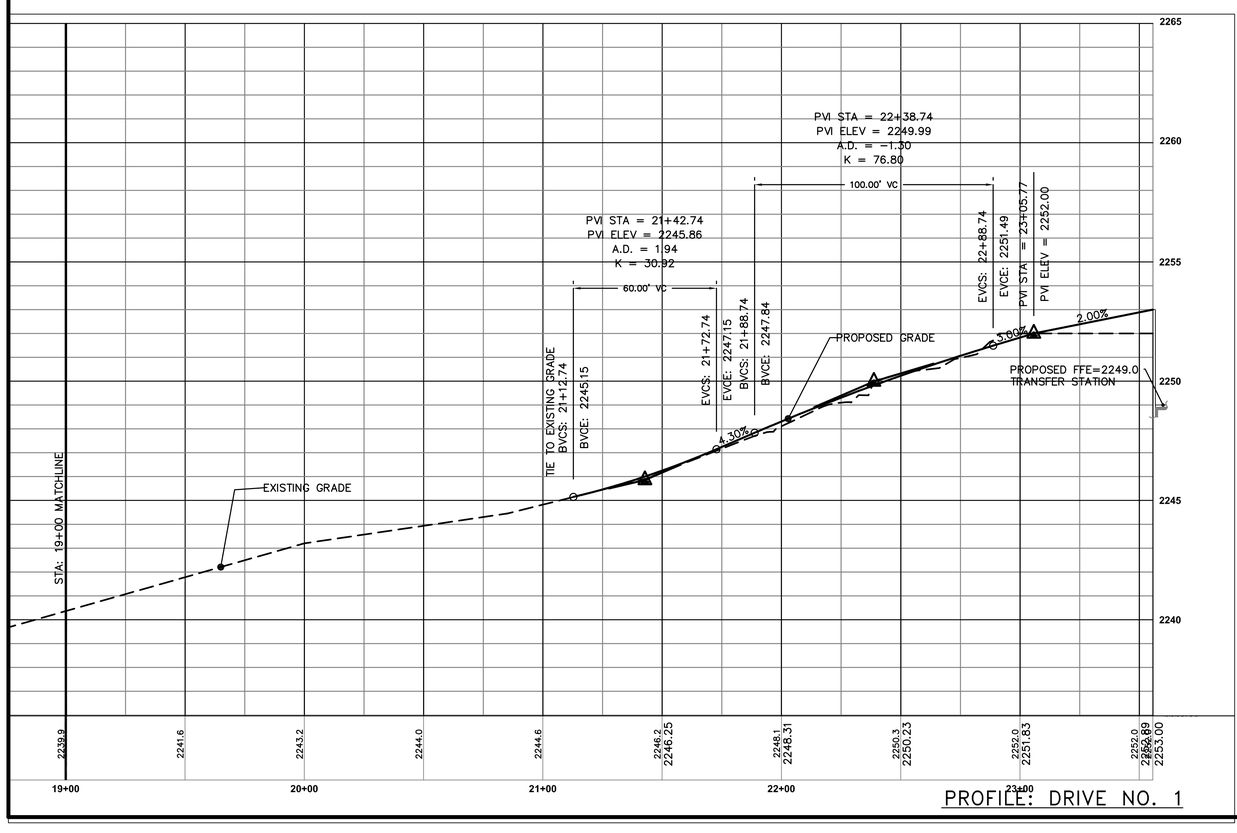

PROFILE: DRIVE NO. 1

HORIZONTAL SCALE = 30'
VERTICAL SCALE = 3'

PRELIMINARY
(NOT FOR CONSTRUCTION)
12/09/08

Municipal Services Engineering Company, P.A.
P.O. BOX 97 GARNER, N.C. 27529 (919) 772-5393
P.O. BOX 278 MOREHEAD CITY, N.C. 28557 (252) 726-9481
P.O. BOX 349 BOONE, N.C. 28607 (828) 262-1767

JAKSON COUNTY TRANSFER STATION

DUPLIN COUNTY, NORTH CAROLINA

DATE	BY	REV.	DESCRIPTION

DRIVE #1 PROFILES

SCALE:	1" = 30'
DATE:	06/25/08
DRWN. BY:	M. SALIHU
CHKD. BY:	W. SULLIVAN
PROJECT NUMBER	G07113
DRAWING NO.	C-06
SHEET NO.	8 of 29

P:\SolidWaste\G07113-Jackson Co. Transfer Station\CAD\CD'S-G07113\G07113-08-C06.dwg, C-06, 1/7/2009 1:34:33 PM, kbussie, KB

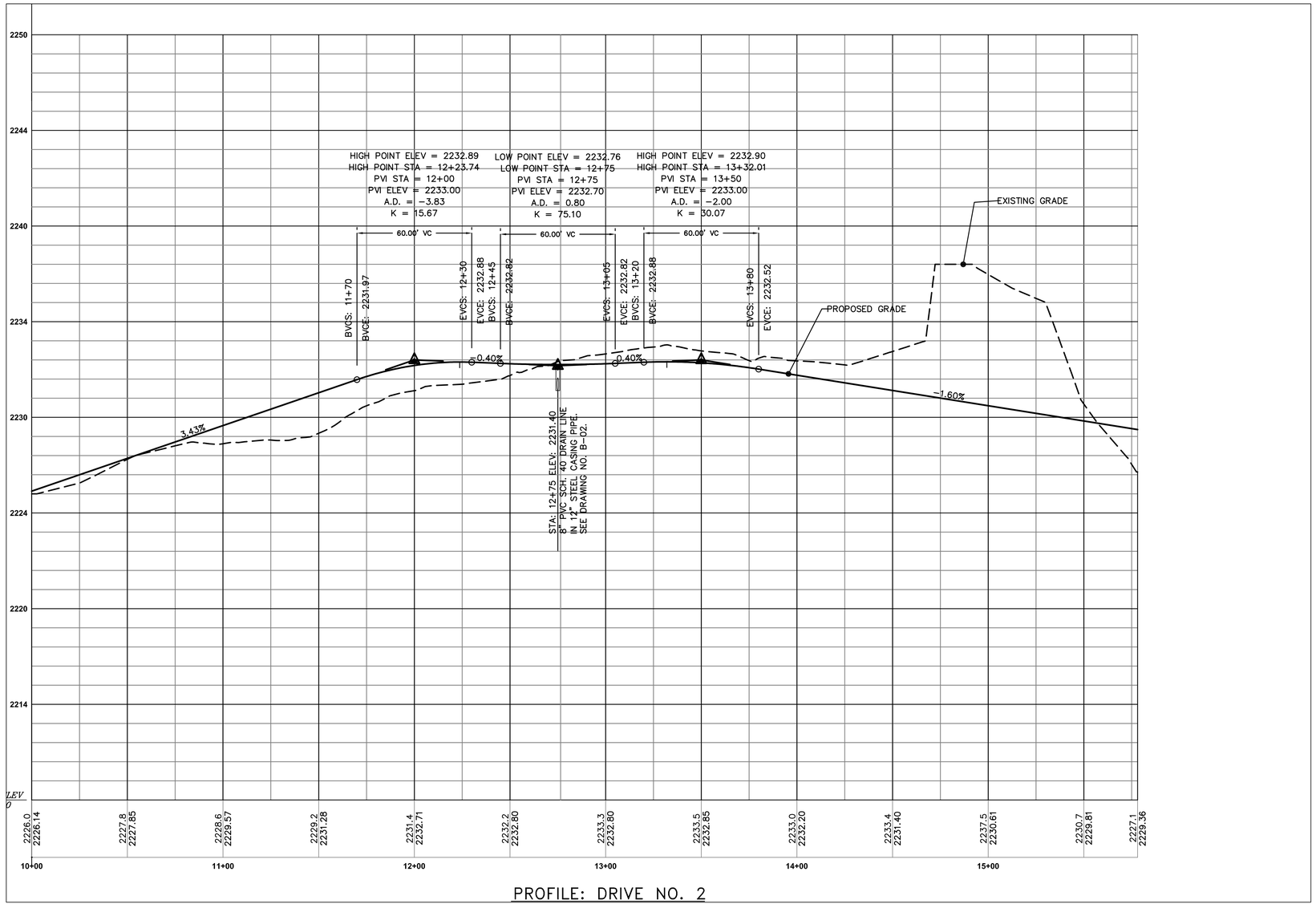

PROFILE: DRIVE NO. 2

HORIZONTAL SCALE = 30'
VERTICAL SCALE = 3'

PRELIMINARY
(NOT FOR CONSTRUCTION)
12/09/08

Municipal Services Engineering Company, P.A.
P.O. BOX 349 BOONE, N.C. 28607 (828) 262-1767
P.O. BOX 278 MOREHEAD CITY, N.C. 28557 (252) 726-9481
P.O. BOX 97 GARNER, N.C. 27529 (919) 772-5393

JAKSON COUNTY
TRANSFER STATION

JAKSON COUNTY, NORTH CAROLINA

DATE	BY	REV.	DESCRIPTION

DRIVE #2 PROFILES

SCALE:	1" = 30'
DATE:	06/25/08
DRWN. BY:	M.SALIHU
CHKD. BY:	W. SULLIVAN
PROJECT NUMBER	G07113
DRAWING NO.	C-07
SHEET NO.	09 of 29

P:\SolidWaste\G07113-Jackson Co. Transfer Station\CAD\CD'S-G07113\G07113-09-C07.dwg, C-07, 1/7/2009 1:38:26 PM, kbusie, kB

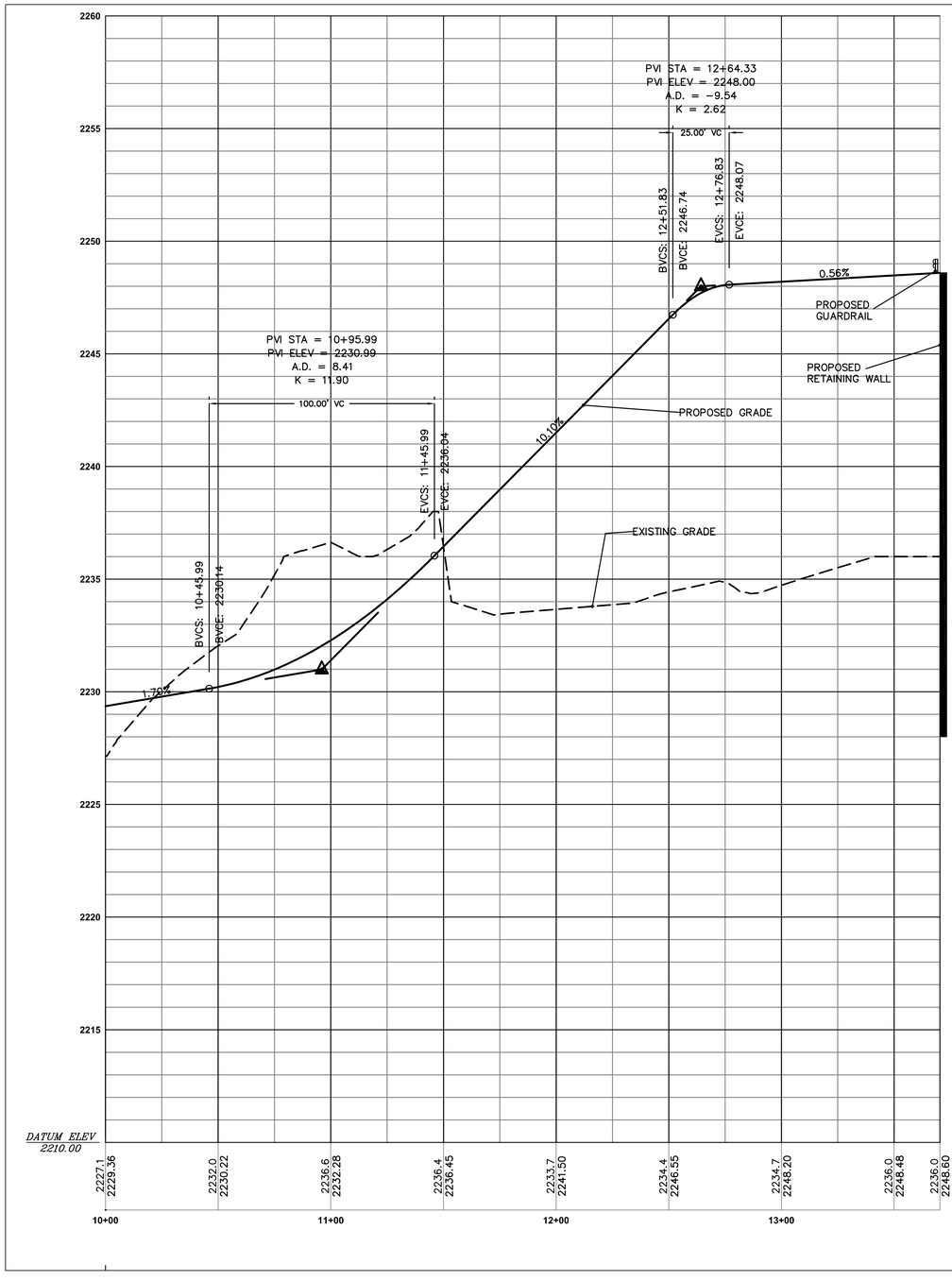

PROFILE: DRIVE NO. 3

HORIZONTAL SCALE = 30'
VERTICAL SCALE = 3'

PRELIMINARY
(NOT FOR CONSTRUCTION)
12/09/08

Municipal Services Engineering Company, P.A.
P.O. BOX 97 GARNER, N.C. 27529 (919) 772-5393
P.O. BOX 349 BOONE, N.C. 28607 (828) 262-1767
P.O. BOX 278 MOREHEAD CITY, N.C. 28557 (252) 726-9481

JAKSON COUNTY TRANSFER STATION

JAKSON COUNTY, NORTH CAROLINA

DATE	BY	REV.	DESCRIPTION

DRIVE #3 PROFILES

SCALE:	1" = 30'
DATE:	06/25/08
DRWN. BY:	M.SALIHU
CHKD. BY:	W. SULLIVAN
PROJECT NUMBER	G07113
DRAWING NO.	C-08
SHEET NO.	10 of 29

Z:\SolidWaste\G07113-Jackson Co. Transfer Station\CAD\CDS-G07113\G07113-10-C08.dwg, C-08, 1/7/2009 1:40:59 PM, kbussie, KB

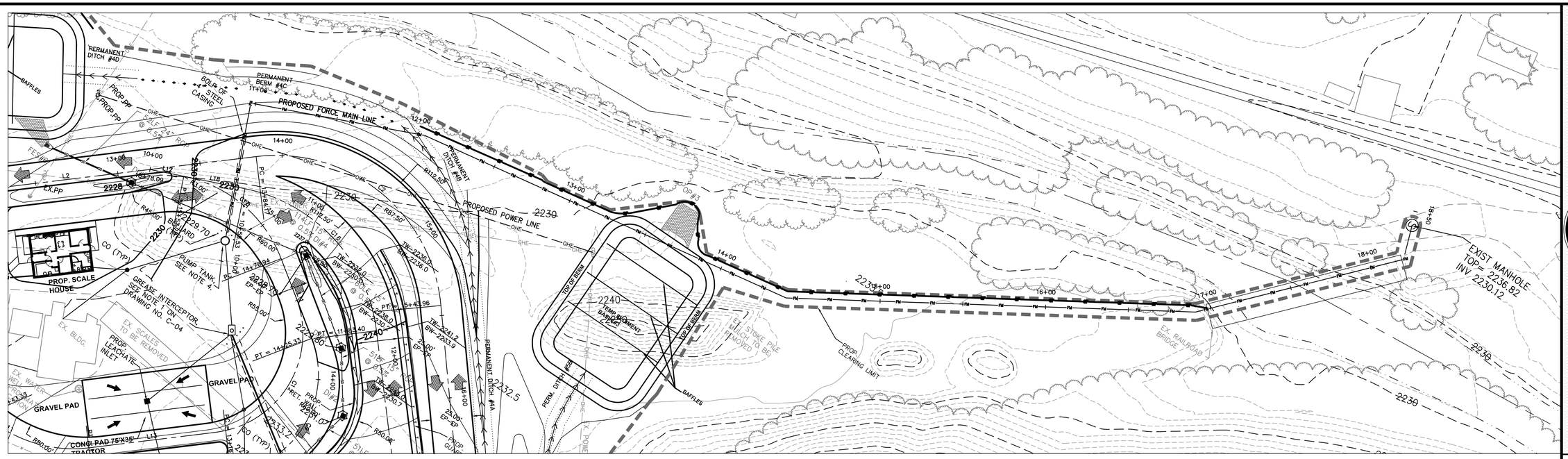

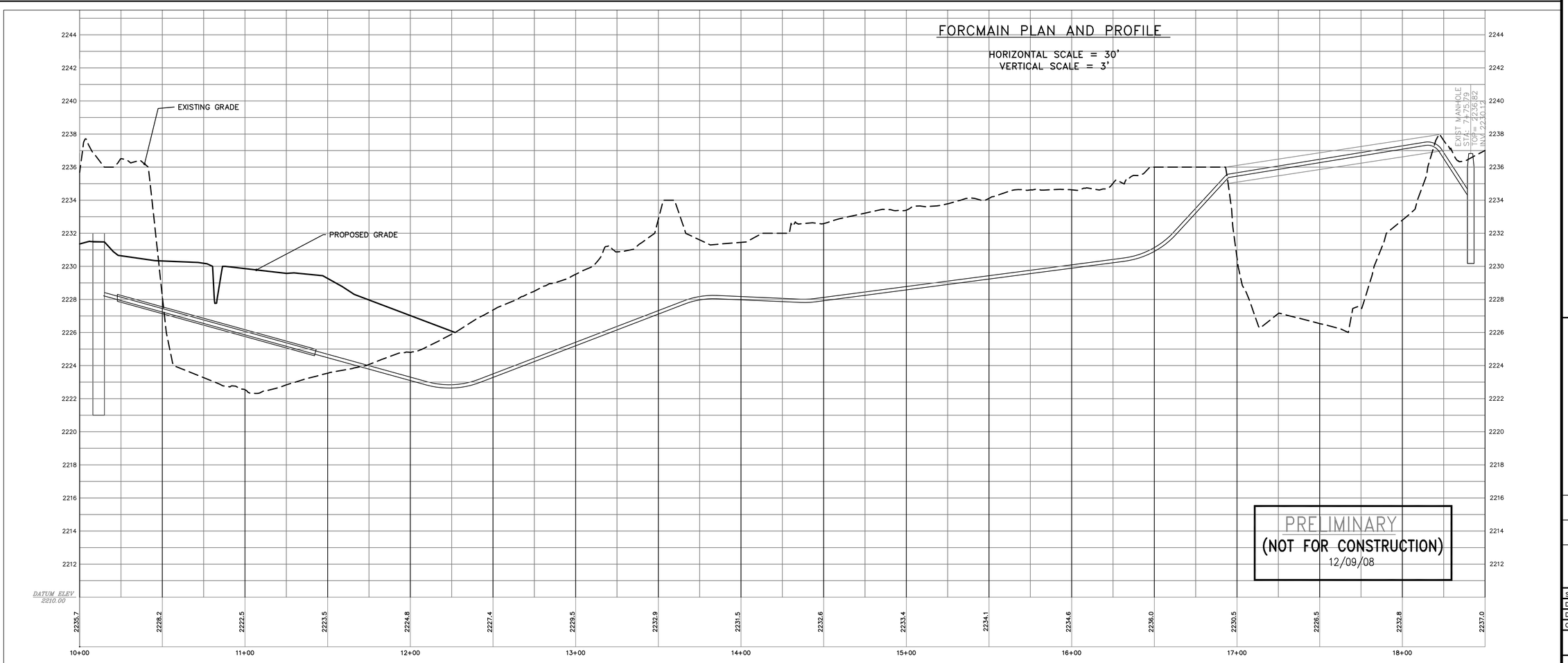

Municipal Services Engineering Company, P.A.
P.O. BOX 349 BOONE, N.C. 28607 (828) 262-1767
P.O. BOX 278 MOREHEAD CITY, N.C. 28557 (252) 726-9481
P.O. BOX 97 GARNER, N.C. 27529 (919) 772-5393

JAKSON COUNTY TRANSFER STATION

JAKSON COUNTY, NORTH CAROLINA

DATE	BY	REV.	DESCRIPTION

FORCEMAIN PLAN AND PROFILES

SCALE:	1" = 30'
DATE:	06/25/08
DRWN. BY:	M.SALIHU
CHKD. BY:	W. SULLIVAN
PROJECT NUMBER	G07113
DRAWING NO.	C-09
SHEET NO.	11 of 29

P:\SolidWaste\G07113-Jackson Co. Transfer Station\CAD\CD'S-G07113\G07113-11-C09.dwg, C-09, 1/7/2009 1:43:54 PM, kbussle, KB

In channels, roll out strips of netting parallel to the direction of flow and over the protective mulch.

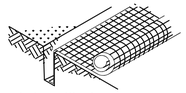

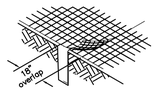

INSTALLATION OF NETTING AND MATTING

Install netting in accordance with manufacturer's instructions and the following:

1. Apply lime, fertilizer, seed and mulch before laying the net.
2. Start laying the net from the top of the slope at the downstream end of the ditch and unroll it down the grade. ALLOW NETTING TO LIE LOOSELY ON THE SOIL BUT WITHOUT WRINKLES--DO NOT STRETCH.
3. To secure the net, bury the upslope end in a slot or trench no less than 6 inches deep, cover with soil, and tamp firmly. Staple the net every 12 inches across the top end and every 3 feet around the edges and bottom. Lap edges of adjoining strips 3 inches, upstream strip over downstream strip, and staple together every 3 feet. Staple each strip of netting down the center, every 3 feet. DO NOT STRETCH THE NET WHEN APPLYING STAPLES.
4. To join ends of two strips, cut a trench to anchor the end of the new net. Overlap the end of the previous roll 18 inches, as shown above, and staple every 12 inches just below the anchor trench. (No trench required on ditch bottom.)

MAINTENANCE

Inspect all mulches periodically, and after rainstorms to check for rill erosion, dislocation, or failure. Where erosion is observed, apply additional mulch. If washout occurs, repair the slope grade, reseed, and reinstall mulch. Continue inspections until vegetation is firmly established.

TYPICAL NETTING AND MATTING DETAIL

N.T.S

DESIGN DITCH SCHEDULE

DITCH NO.	SLOPE (ft./ft.)	TOP WIDTH	BASE WIDTH	APPROX. DEPTH	VELOCITY (f.p.s)	SIDE SLOPE	EROSION CONTROL MATERIAL USED
1A	0.03	6'	0	1.00'	2.52	3:1	JUTE NETTING
1B	0.02	6'	0	1.00'	3.50	3:1	STRAW W/ NET
2	0.02	6'	0	1.00'	3.27	3:1	STRAW W/ NET
3	0.004	25'	5'	1.00'	0.24	10:1	STRAW W/ NET
4	0.07	12'	6'	0.5'	1.24	6:1	STRAW W/ NET
5	0.014	6'	0	1.00'	0.33	3:1	STRAW W/ NET
6	0.005	6'	0	1.00'	0.16	3:1	JUTE NETTING
7	0.005	6'	0	1.00'	0.16	3:1	JUTE NETTING

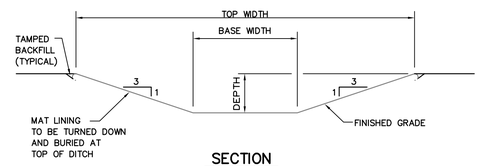

SECTION

TYPICAL PERMANENT DIVERSION DITCH DETAIL

N.T.S

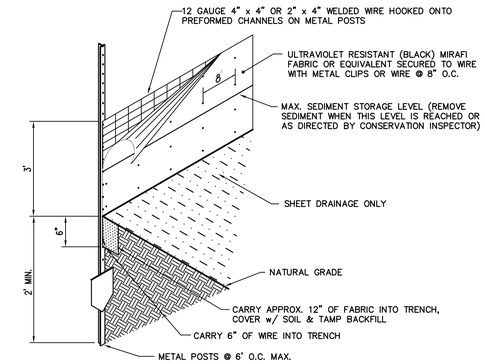

TYPICAL SILT FENCE DETAIL

N.T.S

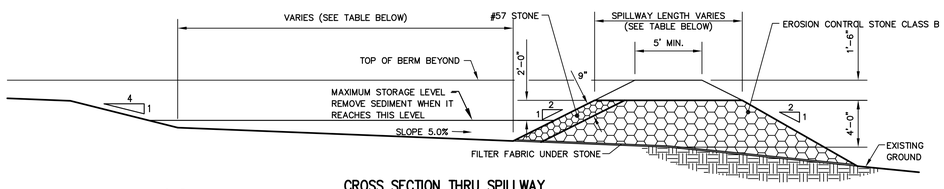

CROSS SECTION THRU SPILLWAY

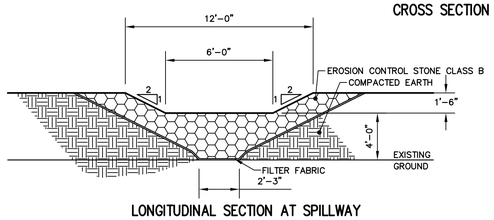

LONGITUDINAL SECTION AT SPILLWAY

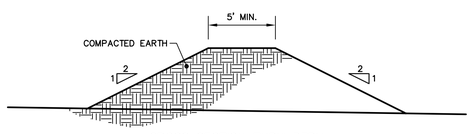

CROSS SECTION THRU BERM

NOTES:

1. REMOVE ALL VEGETATION AND PLOW GROUND UNDER BERM BEFORE CONSTRUCTION.
2. COMPACT BERM TO 90% STANDARD PROCTOR IN 8" LOOSE LIFTS.
3. SEED & APPLY JUTE NET ON BERM IMMEDIATELY UPON COMPLETION.

BASIN NO.	BOTTOM		SPILLWAY		TOP OF BERM
	SIZE	EL.	LENGTH	EL.	EL.
1	45'x90'	68.50'	11'	72.50'	74.00'
2	30'x60'	68.50'	8'	72.50'	74.00'

TEMPORARY SEDIMENT BASIN DETAIL

N.T.S

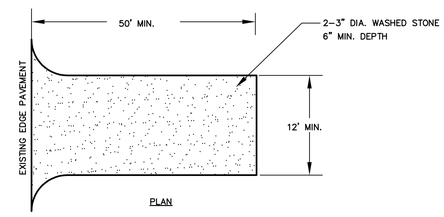

PLAN

NOTES:

1. CLEAR THE ENTRANCE AND EXIT AREA OF ALL VEGETATION, ROOTS AND OTHER OBJECTIONABLE MATERIAL AND PROPERLY GRADE IT.
2. PLACE THE GRAVEL TO THE SPECIFIC GRADE AND DIMENSIONS SHOWN ON THE PLANS AND SMOOTH IT.
3. PROVIDE DRAINAGE TO CARRY WATER TO A SEDIMENT TRAP OR OTHER SUITABLE OUTLET.
4. USE GEOTEXTILE FABRIC UNDER THE STONE IN LOCATIONS SUBJECT TO SEEPAGE OR HIGH WATER TABLE.
5. MAINTAIN THE GRAVEL PAD IN A CONDITION TO PREVENT MUD OR SEDIMENT FROM LEAVING THE CONSTRUCTION SITE. TOPDRESS WITH 2" STONE AS DIRECTED BY THE ENGINEER. AFTER EACH RAINFALL, INSPECT ANY STRUCTURE USED TO TRAP SEDIMENT AND CLEAN IT OUT AS NECESSARY. IMMEDIATELY REMOVE ALL OBJECTIONABLE MATERIALS SPILLED, WASHED OR TRACKED ONTO PAVED ROADWAYS.

CONSTRUCTION ENTRANCE DETAIL

N.T.S

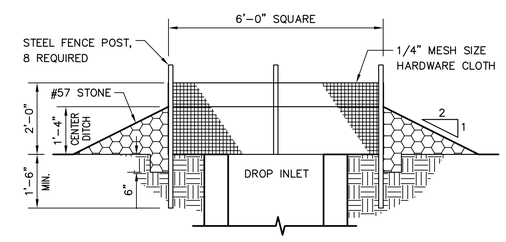

TYPICAL INLET PROTECTION DETAIL

N.T.S

OUTLET PROTECTION SCHEDULE

DEVICE NO.	STONE SIZE	LENGTH	WIDTH	MIN. THICK.
OP-1	6"	10'	11.50'	13.5"
OP-2	6"	5'	11.50'	13.5"
OP-3	9"	5'	6.25'	13.5"

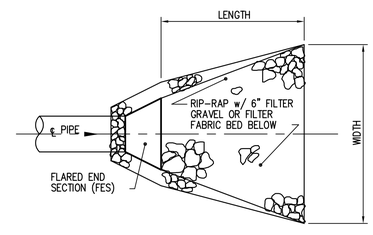

NOTE: SEE OUTLET PROTECTION SCHEDULE FOR SPECIFIC SIZING OF EACH OUTLET.

TYPICAL OUTLET PROTECTION DETAIL

N.T.S

Municipal Services Engineering Company, P.A.
P.O. BOX 97 GARNER, N.C. 27529 (919) 772-5393
P.O. BOX 349 BOONE, N.C. 28607 (828) 262-1767
P.O. BOX 278 MOREHEAD CITY, N.C. 28557 (252) 726-9481

JACKSON COUNTY TRANSFER STATION

JACKSON COUNTY, NORTH CAROLINA

DATE	BY	REV.	DESCRIPTION

EROSION CONTROL AND STORM DRAINAGE DETAILS

SCALE: AS NOTED
DATE: 05/14/08
DRWN. BY: M.SALIHU
CHKD. BY: W. SULLIVAN
PROJECT NUMBER G07113
DRAWING NO. C-10
SHEET NO. 12 of 29

Z:\SolidWaste\G07113-Jackson Co. Transfer Station\CAD\CD'S-G07113\G07113-12-C10.dwg, C-10, 1/7/2009 1:46:07 PM, kbussie, KB

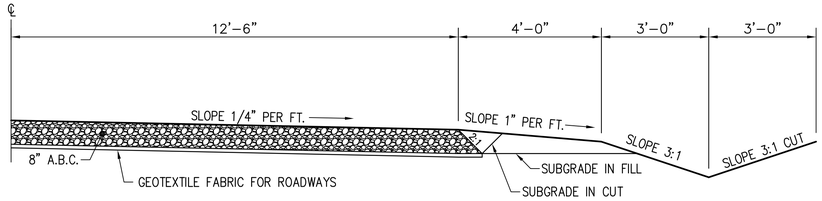

USE SECTION ABOVE FROM STATION 0+93 TO STATION 13+14

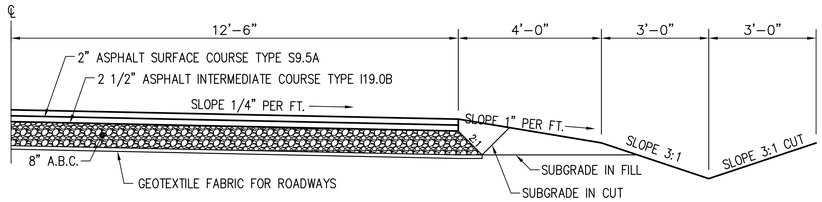

USE SECTION ABOVE FROM STATION 13+14 TO STATION 17+00

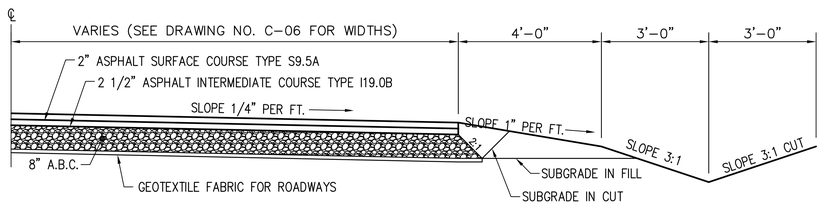

USE SECTION ABOVE FROM STATION 17+00 TO STATION 24+00

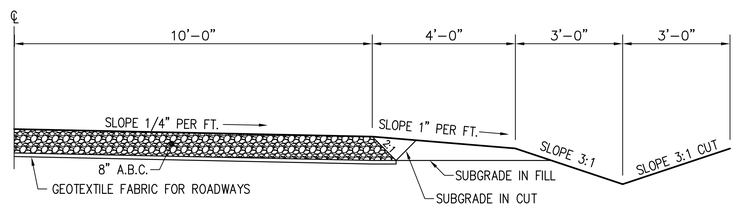

USE SECTION ABOVE FROM STATION 24+28 TO STATION 30+25

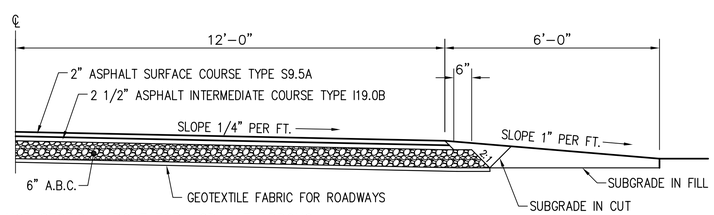

USE SECTION ABOVE FOR ASPHALT APRONS

ASPHALT DRIVE TYPICAL SECTIONS (1)

SCALE: 1/2" = 1'-0"

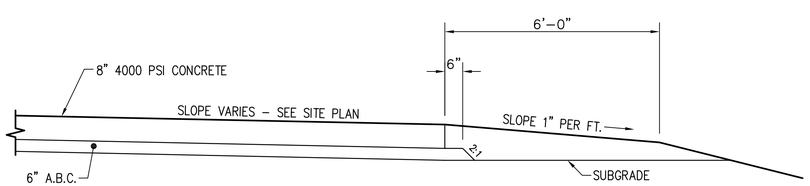

NOTE: SEE DETAIL 5 ON DRAWING NO. S-02 FOR REINFORCEMENT

CONCRETE APRON DETAIL (2)

SCALE: 1/2" = 1'-0"

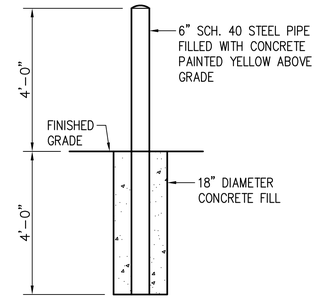

BOLLARD DETAIL (3)

SCALE: 1/2" = 1'-0"

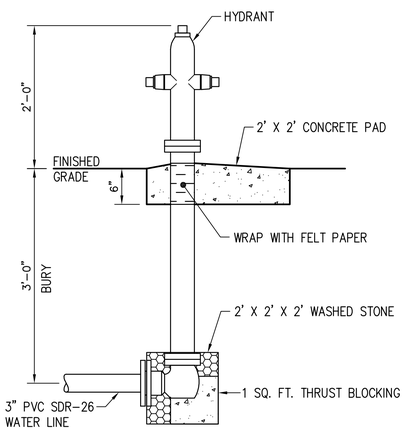

YH-1 HYDRANT DETAIL (4)

SCALE: 1" = 1'-0"

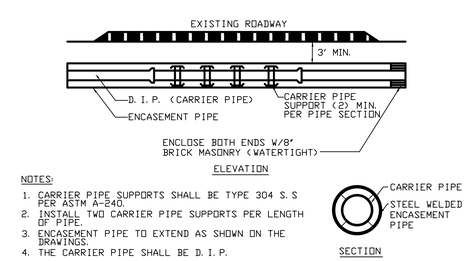

NOTES:

1. CARRIER PIPE SUPPORTS SHALL BE TYPE 304 S. S PER ASTM A-240.
2. INSTALL TWO CARRIER PIPE SUPPORTS PER LENGTH OF PIPE.
3. ENCASEMENT PIPE TO EXTEND AS SHOWN ON THE DRAWINGS.
4. THE CARRIER PIPE SHALL BE D. I. P.

TYPICAL STEEL CASING PIPE DETAIL (5)

N.T.S.

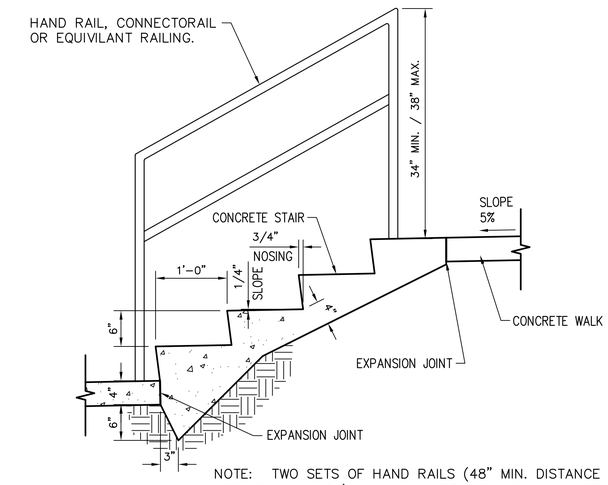

NOTE: TWO SETS OF HAND RAILS (48" MIN. DISTANCE BETWEEN RAILINGS) SHALL BE PROVIDED FOR ALL STEPS EXCEPT STEPS LEADING DOWN TO THE LOWER LEVEL. THESE STEPS SHALL HAVE ONLY ONE SET WITH A MIN. DISTANCE OF 48" FROM THE EDGE OF BUILDING.

STEP DETAIL (6)

SCALE: 1" = 1'-0"

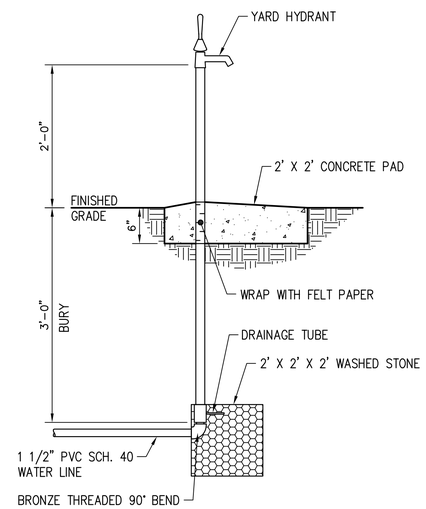

YH-2 HYDRANT DETAIL (7)

SCALE: 1" = 1'-0"

Municipal Services Engineering Company, P.A.
P.O. BOX 97 GARNER, N.C. 27529 (919) 772-5393
P.O. BOX 349 BOONE, N.C. 28607 (828) 262-1767
P.O. BOX 278 MOREHEAD CITY, N.C. 28557 (252) 726-9481

JACKSON COUNTY TRANSFER STATION

JACKSON COUNTY, NORTH CAROLINA

DATE	BY	REV.	DESCRIPTION
3-23-06	SDP	1	ADDED HAND RAILING AND NOTES TO STEP DETAIL.

SITE DETAILS

SCALE:	AS NOTED
DATE:	05-14-08
DRWN. BY:	M. SALIHU
CHKD. BY:	W. SULLIVAN
PROJECT NUMBER	G07113
DRAWING NO.	C-11
SHEET NO.	13 of 29

P:\SolidWaste\G07113-Jackson Co. Transfer Station\CAD\CD'S-G07113\G07113-13-C11.dwg, C11, 1/7/2009 1:47:43 PM, kbussie, KB

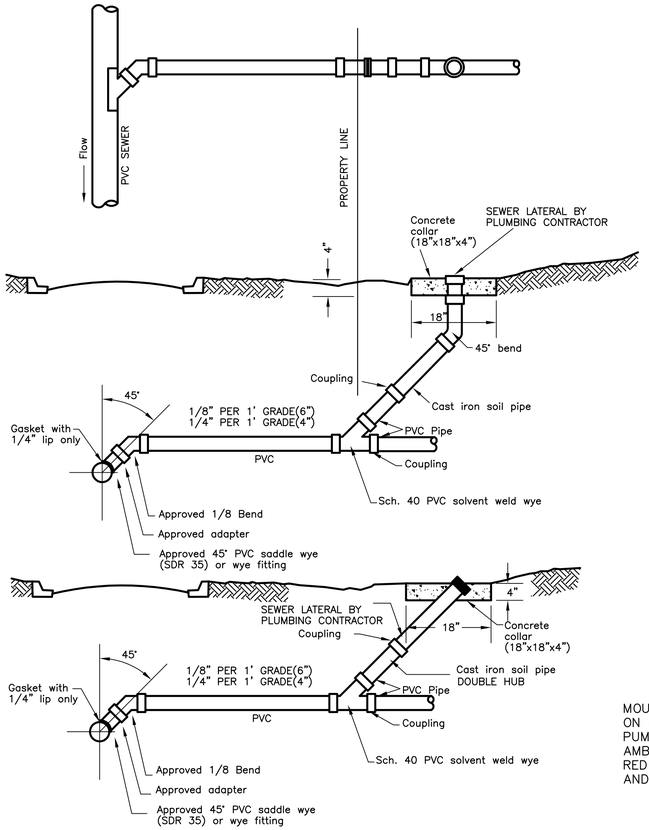

STANDARD COMPLETE SEWER LATERAL
(PVC SEWER MAIN)

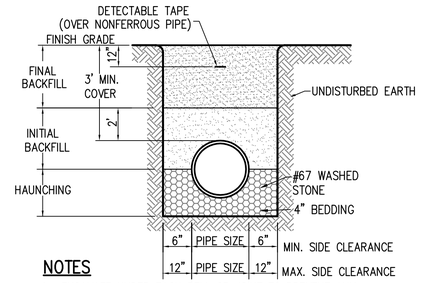

NOTES

1. EXCAVATE UNDER EACH BELL OR JOINT TO PREVENT ANY LOAD ON BELL OR JOINT.
2. FOR TRENCHES REQUIRING SHORING AND BRACING, DIMENSIONS SHALL BE TAKEN FROM THE INSIDE FACE OF THE SHORING AND BRACING
3. NO ROCKS OR BOULDERS SHALL BE USED IN INITIAL BACKFILL
4. ALL BACKFILL MATERIAL SHALL BE SUITABLE NATIVE MATERIAL.
5. BACKFILL SHALL BE TAMPED IN 6" LAYERS IN TRAFFIC AREAS, AND 12" IN NON-TRAFFIC AREAS
6. WHERE ROCK IS ENCOUNTERED IN TRENCH BOTTOM, A CUSHION OF #67 STONE AT LEAST 6" THICK SHALL BE PLACED BETWEEN THE ROCK AND THE PIPE UNLESS OTHERWISE DIRECTED BY THE ENGINEER.
7. WHERE UNSUITABLE SOIL IS ENCOUNTERED, EXCAVATE TO A MINIMUM OF 6" BELOW THE BOTTOM OF THE PIPE BARREL AND REFILL WITH #67 STONE UNLESS OTHERWISE DIRECTED BY THE ENGINEER.

WITHIN PUBLIC RIGHT OF WAY TYPICAL PIPE TRENCH DETAIL (A)

NOT TO SCALE

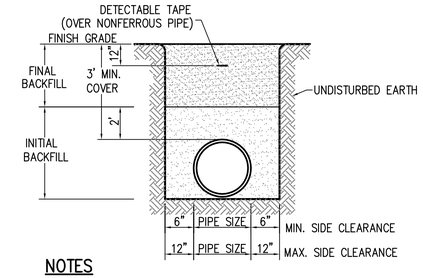

NOTES

1. EXCAVATE UNDER EACH BELL OR JOINT TO PREVENT ANY LOAD ON BELL OR JOINT.
2. FOR TRENCHES REQUIRING SHORING AND BRACING, DIMENSIONS SHALL BE TAKEN FROM THE INSIDE FACE OF THE SHORING AND BRACING
3. NO ROCKS OR BOULDERS 4" OR LARGER SHALL BE USED IN INITIAL BACKFILL
4. ALL BACKFILL MATERIAL SHALL BE SUITABLE NATIVE MATERIAL.
5. BACKFILL SHALL BE TAMPED IN 6" LAYERS IN TRAFFIC AREAS, AND 12" IN NON-TRAFFIC AREAS
6. WHERE ROCK IS ENCOUNTERED IN TRENCH BOTTOM, A CUSHION OF #67 STONE AT LEAST 6" THICK SHALL BE PLACED BETWEEN THE ROCK AND THE PIPE UNLESS OTHERWISE DIRECTED BY THE ENGINEER.
7. WHERE UNSUITABLE SOIL IS ENCOUNTERED, EXCAVATE TO A MINIMUM OF 6" BELOW THE BOTTOM OF THE PIPE BARREL AND REFILL WITH #67 STONE UNLESS OTHERWISE DIRECTED BY THE ENGINEER.

ON SITE TYPICAL PIPE TRENCH DETAIL (C)

NOT TO SCALE

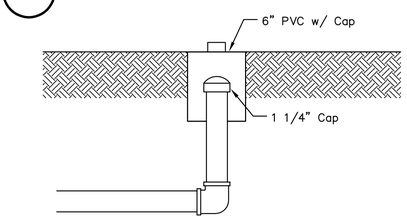

TYPICAL LATERAL TURN-UP DETAIL

N.T.S

NOTE:

MOUNT PUMP CONTROL PANEL ON WALL OF HIGH SERVICE PUMP STATION. PROVIDE AMBER LEAK ALARM LIGHT, RED HIGH WATER ALARM LIGHT AND ALARM HORN.

DESIGN SUMMARY

Transfer Station Flow	150 GPD
Domestic Waste	360 GPD
Total	510 GPD

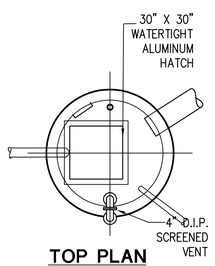

TOP PLAN

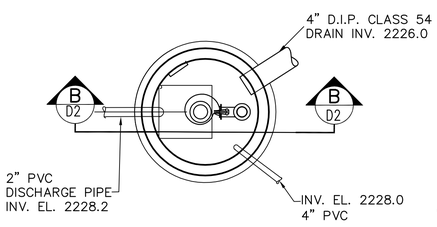

INSIDE PLAN

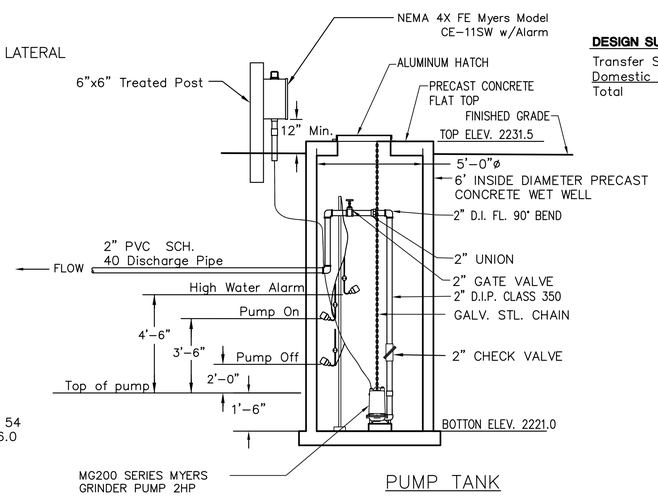

PUMP TANK

SECTION B

TYPICAL PLUMBING AND PUMP DETAIL (B / B2)

NOT TO SCALE

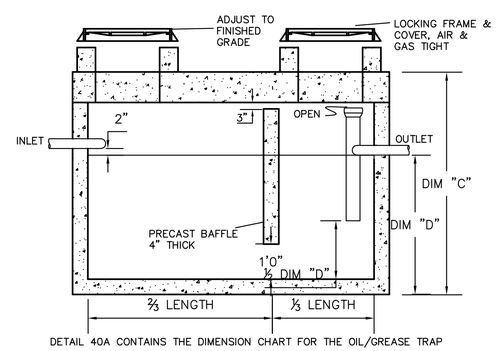

DETAIL 40A CONTAINS THE DIMENSION CHART FOR THE OIL/GREASE TRAP
DRAWING NOT TO SCALE

OIL AND GREASE TRAP
DIMENSION CHART

CAP (GAL.)	DIM "A"	DIM "B"	DIM "C"	DIM "D"
600	7'0"	4'8"	7'0"	3'6"
750	7'0"	4'8"	7'0"	4'3"
1000	9'0"	5'0"	7'2"	4'2"
1250	9'0"	5'0"	7'2"	5'2"
1500	11'2"	5'8"	7'2"	4'4"
1750	11'2"	5'8"	7'2"	4'11"
2000	12'8"	6'8"	8'0"	4'7"
2500	12'8"	6'8"	8'0"	5'6"
2750	12'8"	6'8"	8'0"	6'0"
3000	15'7"	9'7"	8'6.5"	5'0"
4000	15'7"	9'7"	8'6.5"	6'3"
5000	19'11"	9'11"	8'11"	6'2"
6000	19'11"	9'11"	10'5"	7'2"

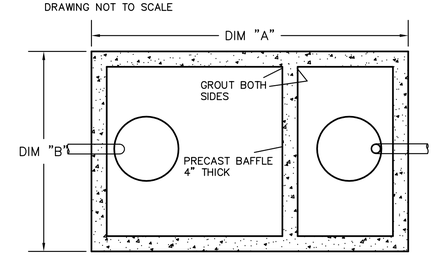

OIL AND GREASE TRAP SIZING

NOT TO SCALE

NOTES:

1. CONCRETE: 28 DAY f'c=4500 psi
2. REBAR: ASTM A-615 GRADE 60
3. MESH: ASTM A-185 GRADE 65
4. DESIGN: ACI 318-83 BUILDING CODE
   ASTM C-857 MINIMUM STRUCTURAL DESIGN
   LOADING FOR UNDERGROUND PRECAST CONCRETE UTILITY STRUCTURES
5. LOADS: H-20 TRUCK WHEEL WITH 30% IMPACT PER AASHTO
6. FILL WITH CLEAN WATER PRIOR TO START UP OF SYSTEM
7. CONTRACTOR TO SUPPLY AND INSTALL ALL PIPING, SANITARY TEEs, AND 4" DUAL SWEEP CLEAN OUTS (FOR CLEANING TOWARD AND AWAY FROM TRAP ON BOTH THE INLET AND OUTLET SIDE).
8. GRAY WATER ONLY, BLACK WATER SHALL BE CARRIED BY SEPARATE SEWER.
9. ALL PIPE PENETRATIONS SHALL BE WATERTIGHT

Municipal Services Engineering Company, P.A.
P.O. BOX 67 GARNER, N.C. 27529 (919) 772-5393
P.O. BOX 278 MOREHEAD CITY, N.C. 28557 (252) 726-9481
P.O. BOX 349 BOONE, N.C. 28607 (828) 262-1767

JACKSON COUNTY TRANSFER STATION
JACKSON COUNTY, NORTH CAROLINA

DATE	BY	REV.	DESCRIPTION

SITE DETAILS

SCALE: AS NOTED
DATE: 05-14-08
DRWN. BY: M. SALIHU
CHKD. BY: W. SULLIVAN
PROJECT NUMBER G07113
DRAWING NO. C-12
SHEET NO. 14 of 29

P:\SolidWaste\G07113-Jackson Co. Transfer Station\CAD\CD'S-G07113\G07113-14-C12.dwg, C-12, 1/7/2009 1:51:07 PM, Wusale, KB

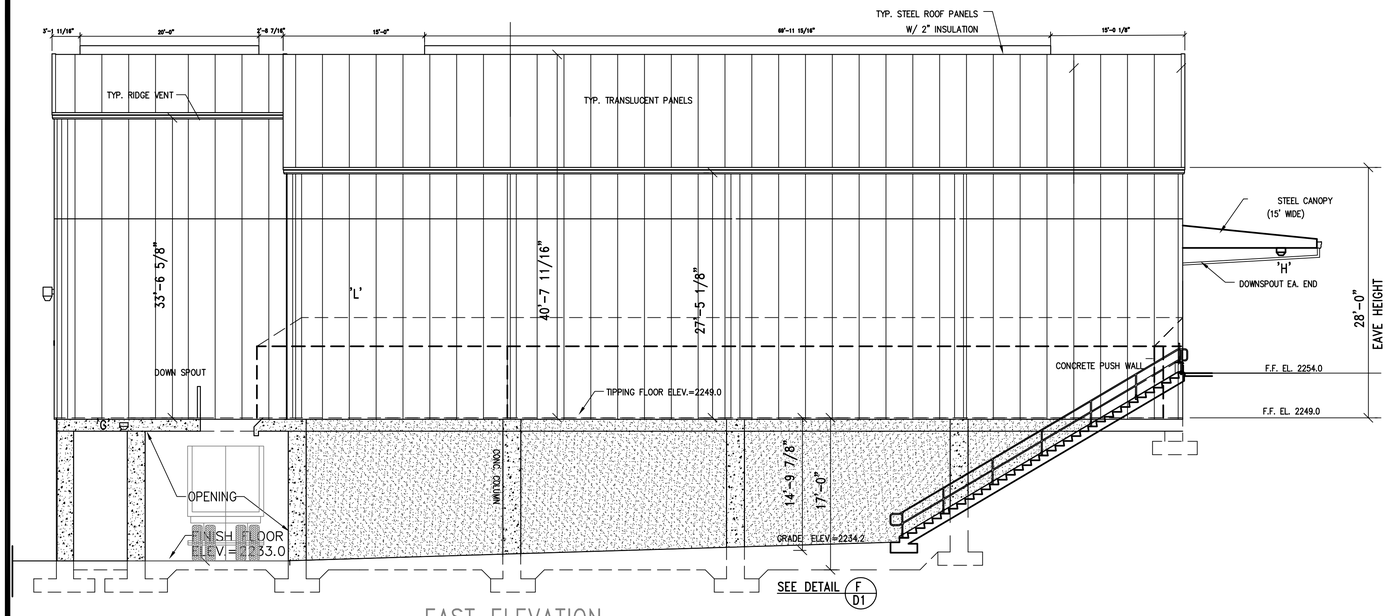

EAST ELEVATION
SCALE: 1/8" = 1'-0"

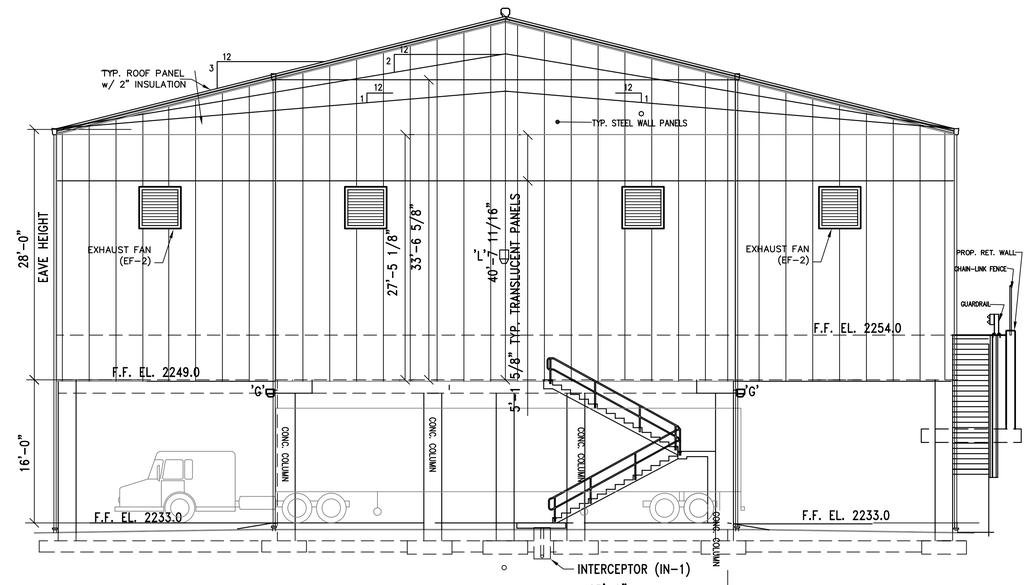

NORTH ELEVATION
SCALE: 1/8" = 1'-0"

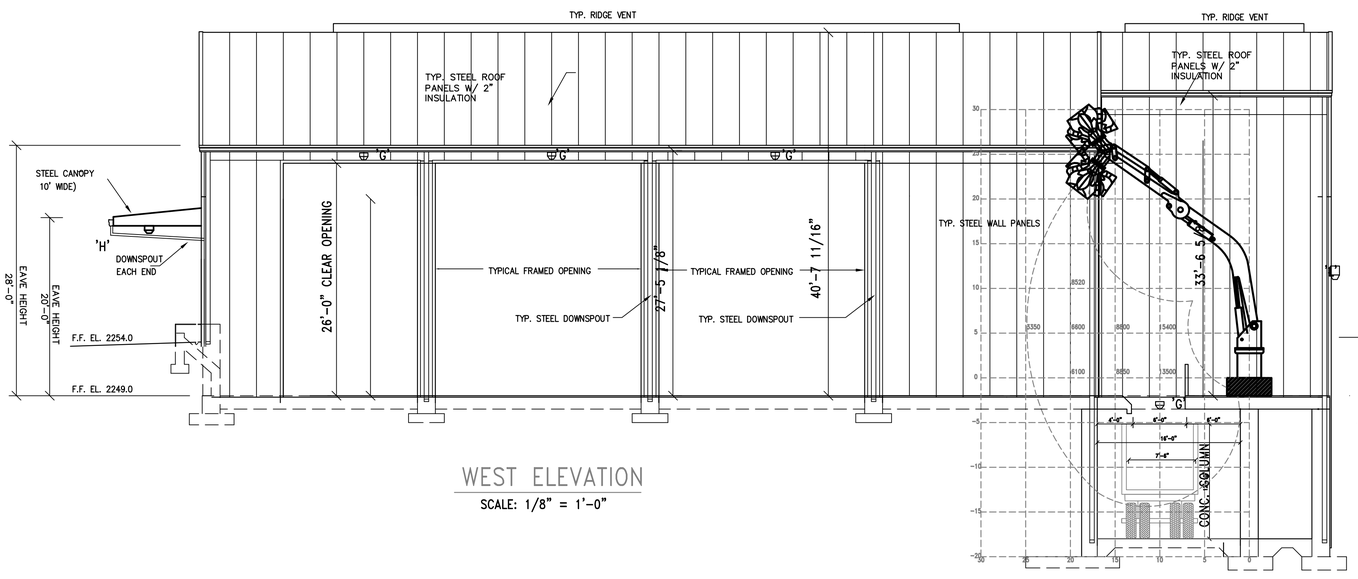

WEST ELEVATION
SCALE: 1/8" = 1'-0"

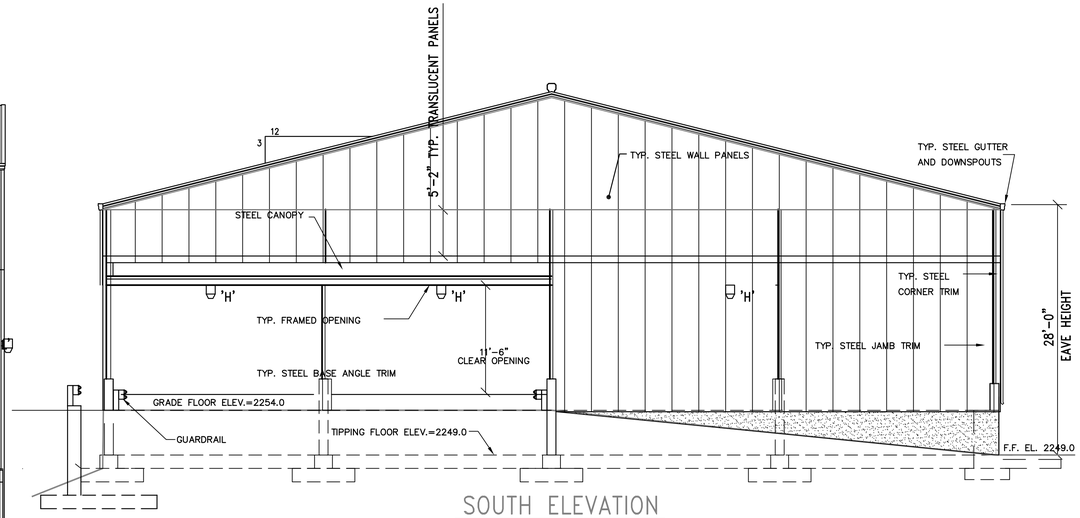

SOUTH ELEVATION
SCALE: 1/8" = 1'-0"

PRELIMINARY
(NOT FOR CONSTRUCTION)
09-10-08

DATE	BY	REV.	DESCRIPTION

Municipal Services Engineering Company, P.A.
P.O. BOX 97 GARNER, N.C. 27529 (919) 772-0205
P.O. BOX 549 BOONE, N.C. 28607 (828) 262-1767

PROJECT	SOLID WASTE HANDLING AND TRANSFER FACILITY
OWNER	COUNTY OF JACKSON, N.C.
TITLE	JACKSON COUNTY SYLVA , NC TRANSFER STATION ELEVATIONS
DRAWING NUMBER	B-01
SCALE	AS SHOWN
DRWN. BY	M.S
PROJECT NO.	G07113
SHEET NUMBER	15 of 29
DATE	09-10-08
CHKD BY	J.D.W.

P:\SolidWaste\G07113-Jackson Co. Transfer Station\CADD\CDS-G07113\G07113-15-B01.dwg, B-01, 1/7/2009 1:56:30 PM, kbussie, KB

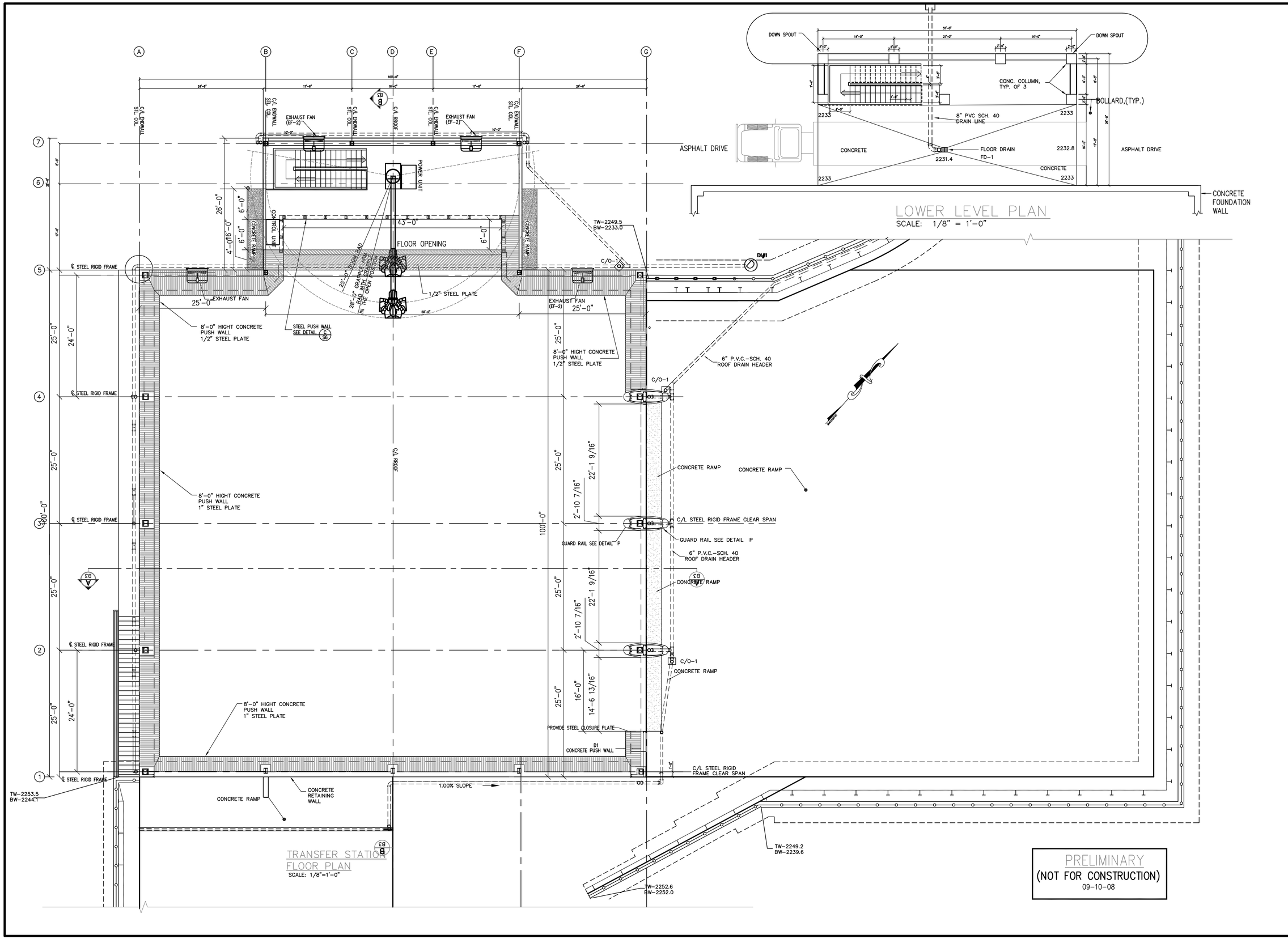

PRELIMINARY
(NOT FOR CONSTRUCTION)
09-10-08

Municipal Services Engineering Company, P.A.
P.O. BOX 349 BOONE, N.C. 28607 (828) 262-1767
P.O. BOX 97 GARNER, N.C. 27529 (919) 772-5393

TRANSFER STATION JACKSON COUNTY

DATE	BY	REV.	DESCRIPTION

BUILDING ELEVATIONS

SCALE: 1/8" = 1'-0"
DATE: –
DRWN. BY: MS
CHKD. BY: J.D.W.
PROJECT NUMBER G07113
DRAWING NO. B2
SHEET NO. 16 OF 29

P:\SolidWaste\G07113-Jackson Co. Transfer Station\CAD\CDS-G07113\G07113-16-B02.dwg, B-02, 1/7/2009 1:58:31 PM, kbussie, KB

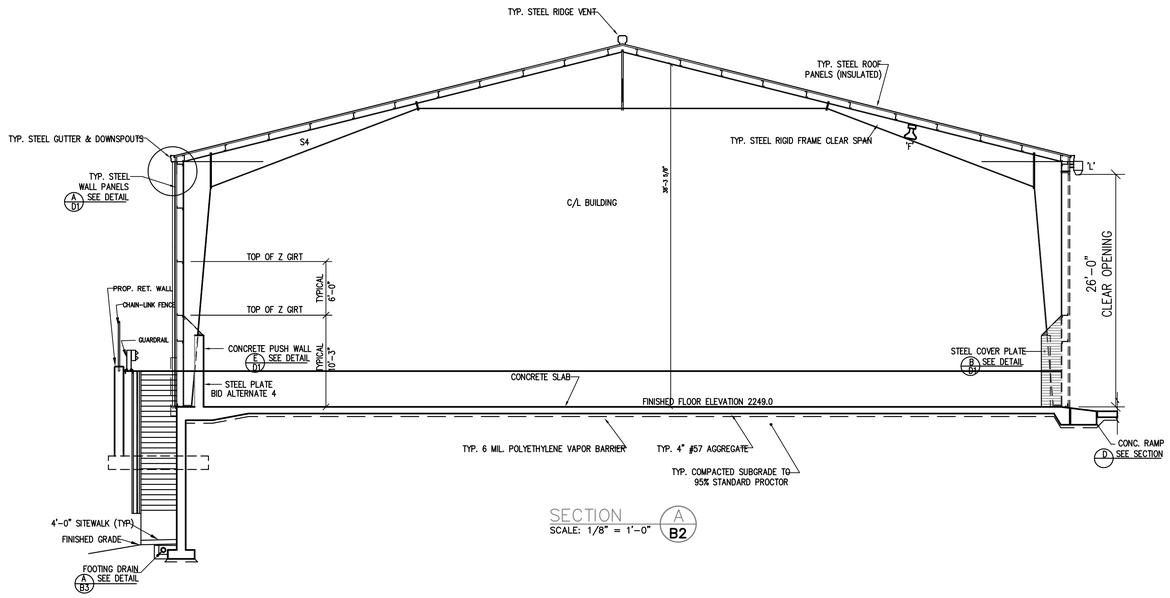

SECTION A
SCALE: 1/8" = 1'-0" B2

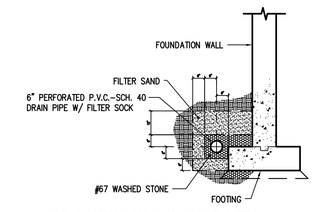

NOTE: FOR VERTICAL PIPE SECTIONS @ FOOTING STEPS USE UNPERFORATED P.V.C.-SCH. 40 PIPE.

FOOTING DRAIN DETAIL A B2
SCALE: 1/2" = 1'-0"

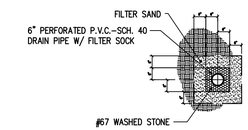

FOOTING DRAIN HEADER DETAIL B B3
SCALE: 1/2" = 1'-0"

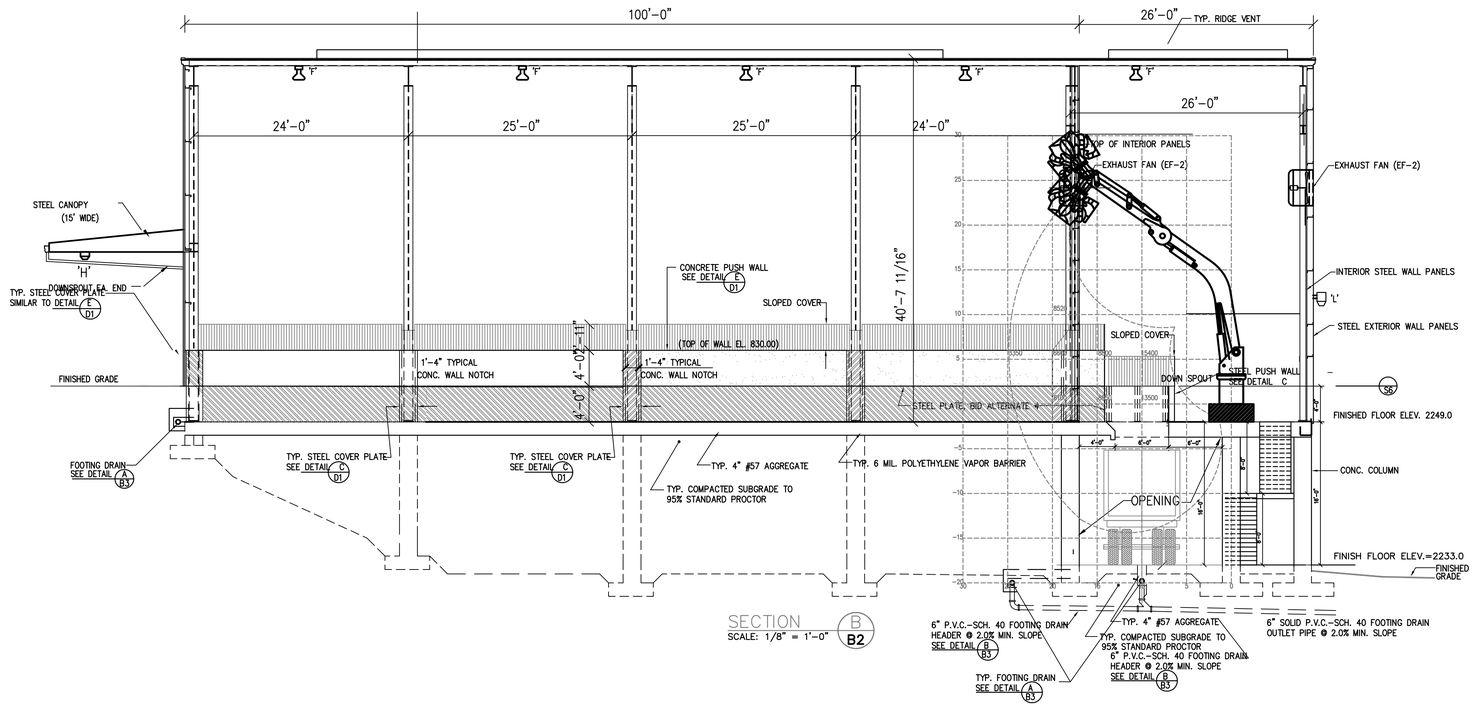

SECTION B
SCALE: 1/8" = 1'-0" B2

PRELIMINARY
(NOT FOR CONSTRUCTION)
09/14/08

Municipal Engineering Services Company, P.A.
P.O. BOX 349 BOONE, N.C. 28607 (828) 262-1767
P.O. BOX 97 GARNER, N.C. 27529 (919) 772-5393

TRANSFER STATION JACKSON COUNTY

DATE	BY	REV.	DESCRIPTION

BUILDING ELEVATIONS

SCALE:	1/8" = 1'-0"
DATE:	–
DRWN. BY:	MS
CHKD. BY:	J.D.W.
PROJECT NUMBER	G07113
DRAWING NO.	B3
SHEET NO.	–

P:\SolidWaste\G07113-Jackson Co. Transfer Station\CAD\CD's-G07113\G07113-17-B03.dwg, B-02, 1/7/2009 2:00:08 PM, kbussie, KB

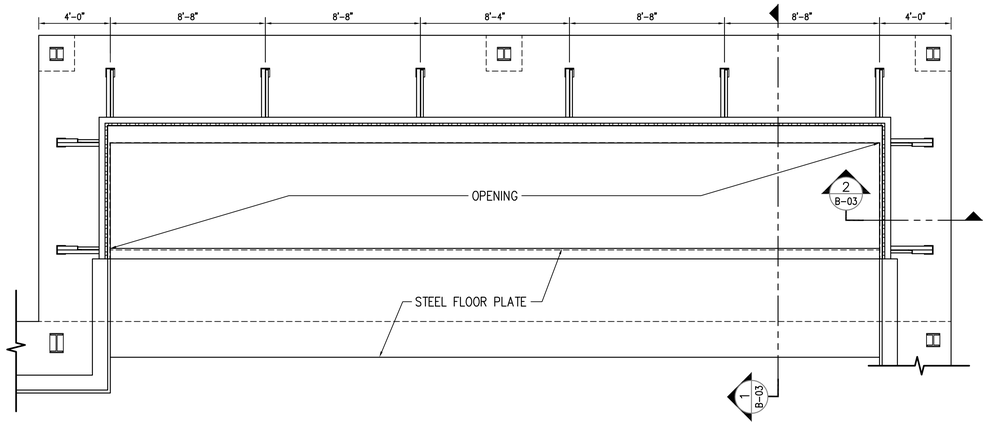

ENLARGED PLAN AT FLOOR OPENING
SCALE: 1/4" = 1'-0"

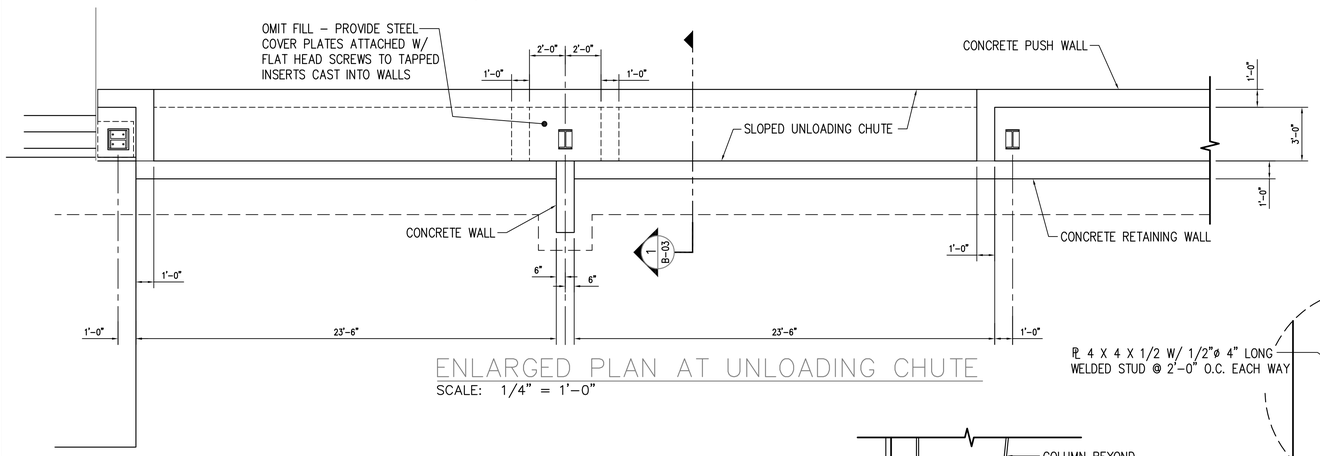

ENLARGED PLAN AT UNLOADING CHUTE
SCALE: 1/4" = 1'-0"

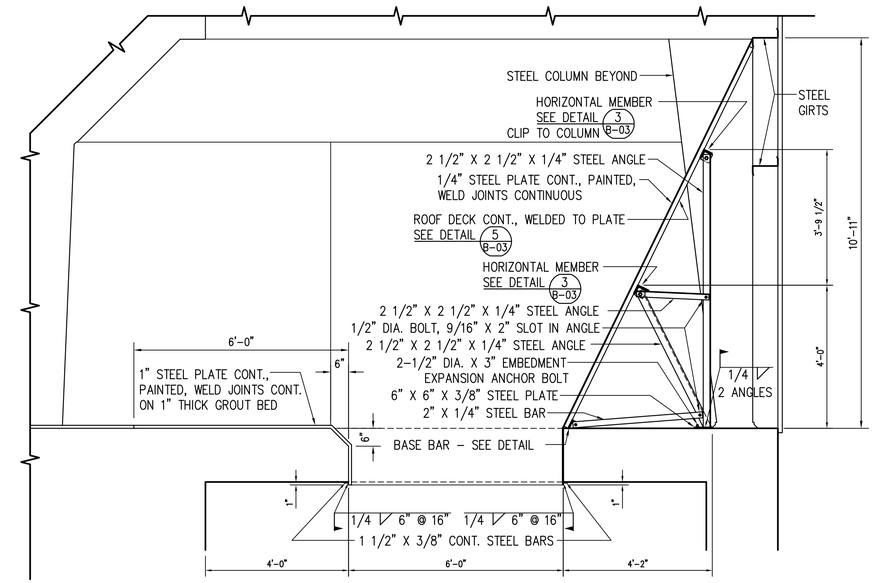

REAR PLATE DETAIL 1 B-03
SCALE: 1/2" = 1'-0"

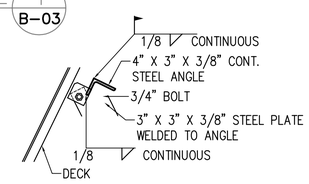

HORIZONTAL MEMBER DETAIL 3 B-03
SCALE: 1" = 1'-0"

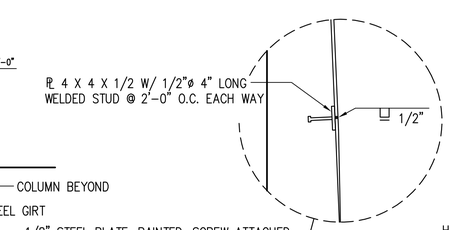

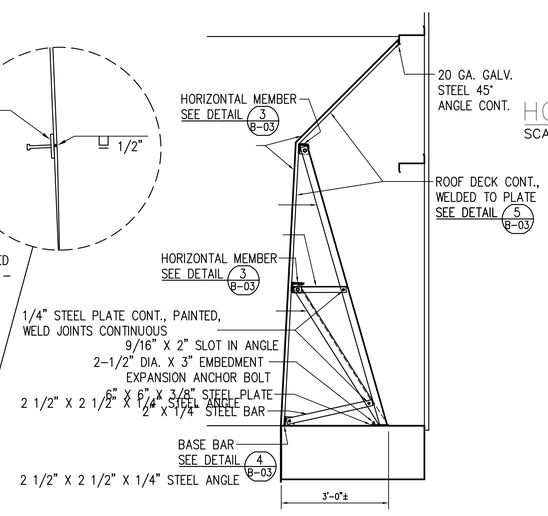

SIDE PLATE DETAIL 2 B-03
SCALE: 1" = 1'-0"

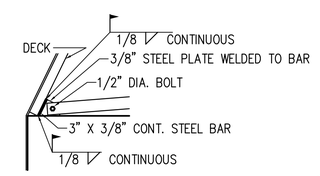

BASE BAR DETAIL 4 B-03
SCALE: 1" = 1'-0"

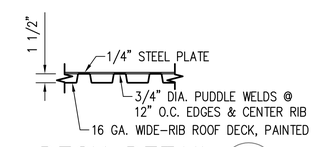

DECK DETAIL 5 B-03
SCALE: 1" = 1'-0"

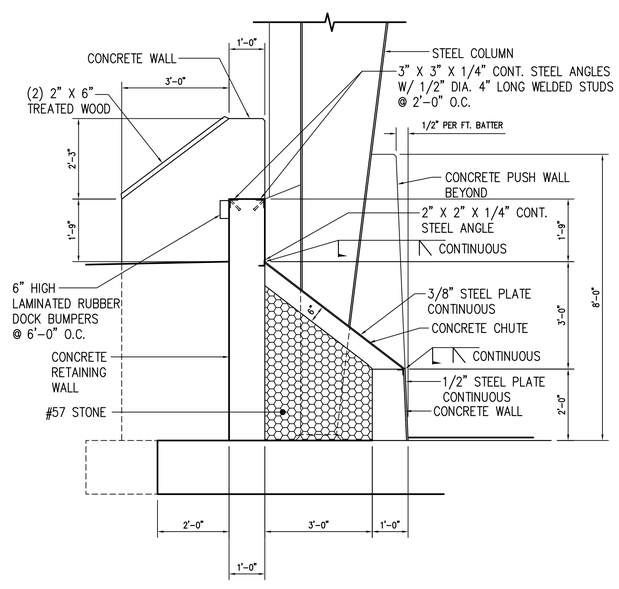

CHUTE DETAIL 1 B-03
SCALE: 1/2" = 1'-0"

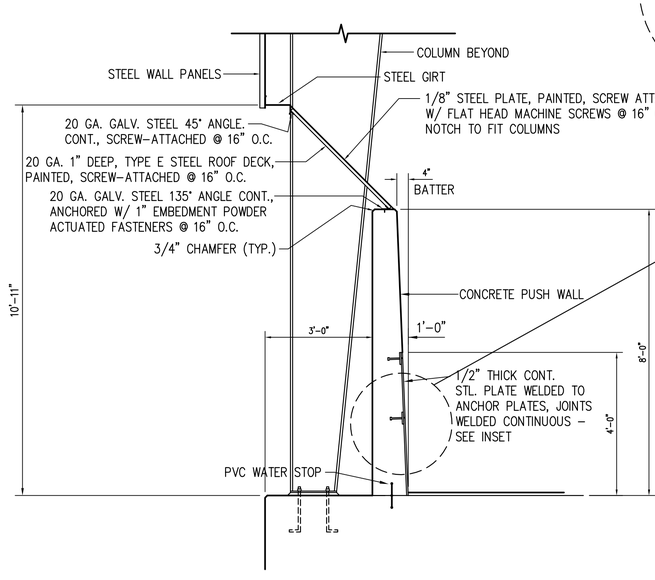

PUSH WALL DETAIL 2 B-03
SCALE: 1/2" = 1'-0"

Municipal Services Engineering Company, P.A.
P.O. BOX 97 GARNER, N.C. 27529 (919) 772-5393
P.O. BOX 349 BOONE, N.C. 28607 (828) 262-1767
P.O. BOX 278 MOREHEAD CITY, N.C. 28557 (252) 726-9481

JAKSON COUNTY TRANSFER STATION
JAKSON COUNTY, NORTH CAROLINA

DATE	BY	REV.	DESCRIPTION

ENLARGED PLANS AND DETAILS

SCALE:	1" = 40'
DATE:	06/30/08
DRWN. BY:	M. SALIHU
CHKD. BY:	W. SULLIVAN
PROJECT NUMBER	G07113
DRAWING NO.	B-04
SHEET NO.	18 of 29

Z:\SolidWaste\G07113-Jackson Co. Transfer Station\CAD\CD'S-G07113\G07113-18-B04.dwg, B-04, 1/7/2009 2:02:26 PM, kbussis, KB

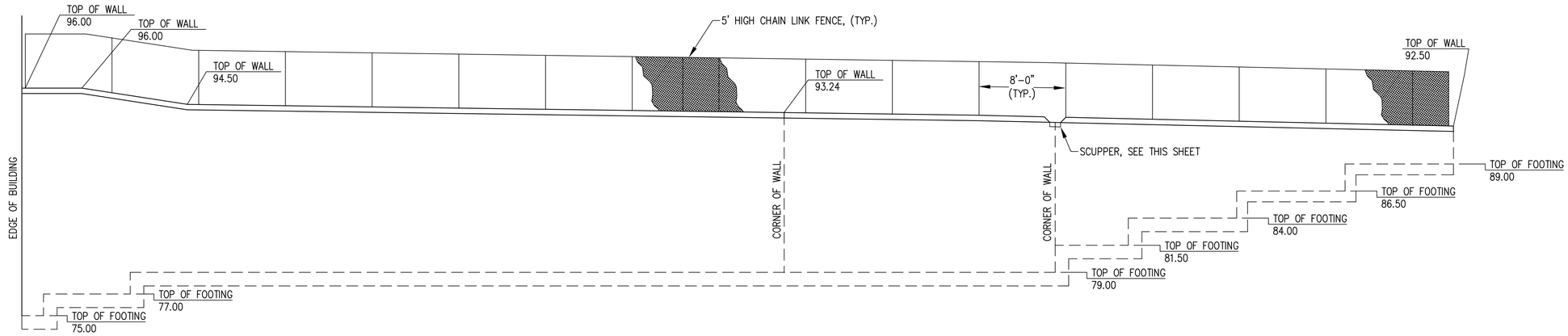

NORTH RETAINING WALL ELEVATION
SCALE: 3/16" = 1'-0"

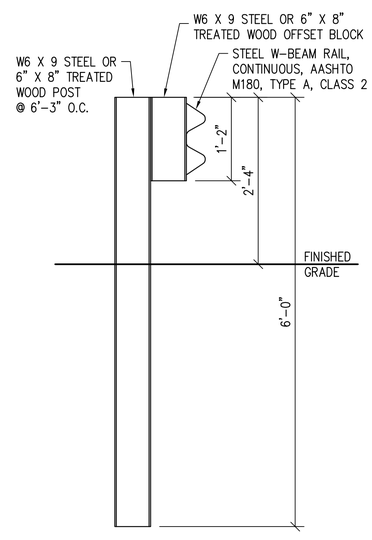

NOTE: ALL STEEL PARTS SHALL BE HOT-DIP GALVANIZED

GUARDRAIL DETAIL
AT ASPHALT APRON (2)
SCALE: 1" = 1'-0"

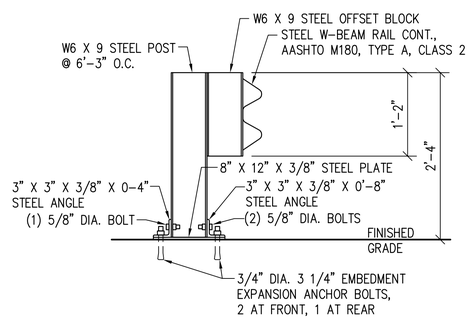

NOTE: ALL STEEL PARTS SHALL BE HOT-DIP GALVANIZED

GUARDRAIL DETAIL
AT CONCRETE APRON (3)
SCALE: 1" = 1'-0"

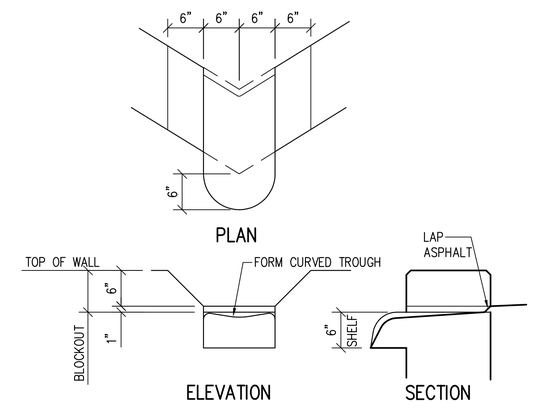

SCUPPER DETAIL (1)
SCALE: 1" = 1'-0"
B-05

Municipal Engineering Services Company, P.A.
P.O. BOX 97 GARNER, N.C. 27529 (919) 772-5393
P.O. BOX 278 MOREHEAD CITY, N.C. 28557 (252) 726-9481
P.O. BOX 349 BOONE, N.C. 28607 (828) 262-1767

JAKSON COUNTY
TRANSFER STATION

JAKSON COUNTY, NORTH CAROLINA

DATE	BY	REV.	DESCRIPTION

RETAINING WALL ELEVATION
AND DETAILS

SCALE:	1" = 30"
DATE:	06/30/08
DRWN. BY:	M. SALIHU
CHKD. BY:	W. SULLIVAN
PROJECT NUMBER	G07113
DRAWING NO.	B-05
SHEET NO.	19 of 29

P:\SolidWaste\G07113-Jackson Co. Transfer Station\CADD\CDS-G07113\G07113-19-B05.dwg, B-05, 1/7/2009 2:10:00 PM, kbussic, KB

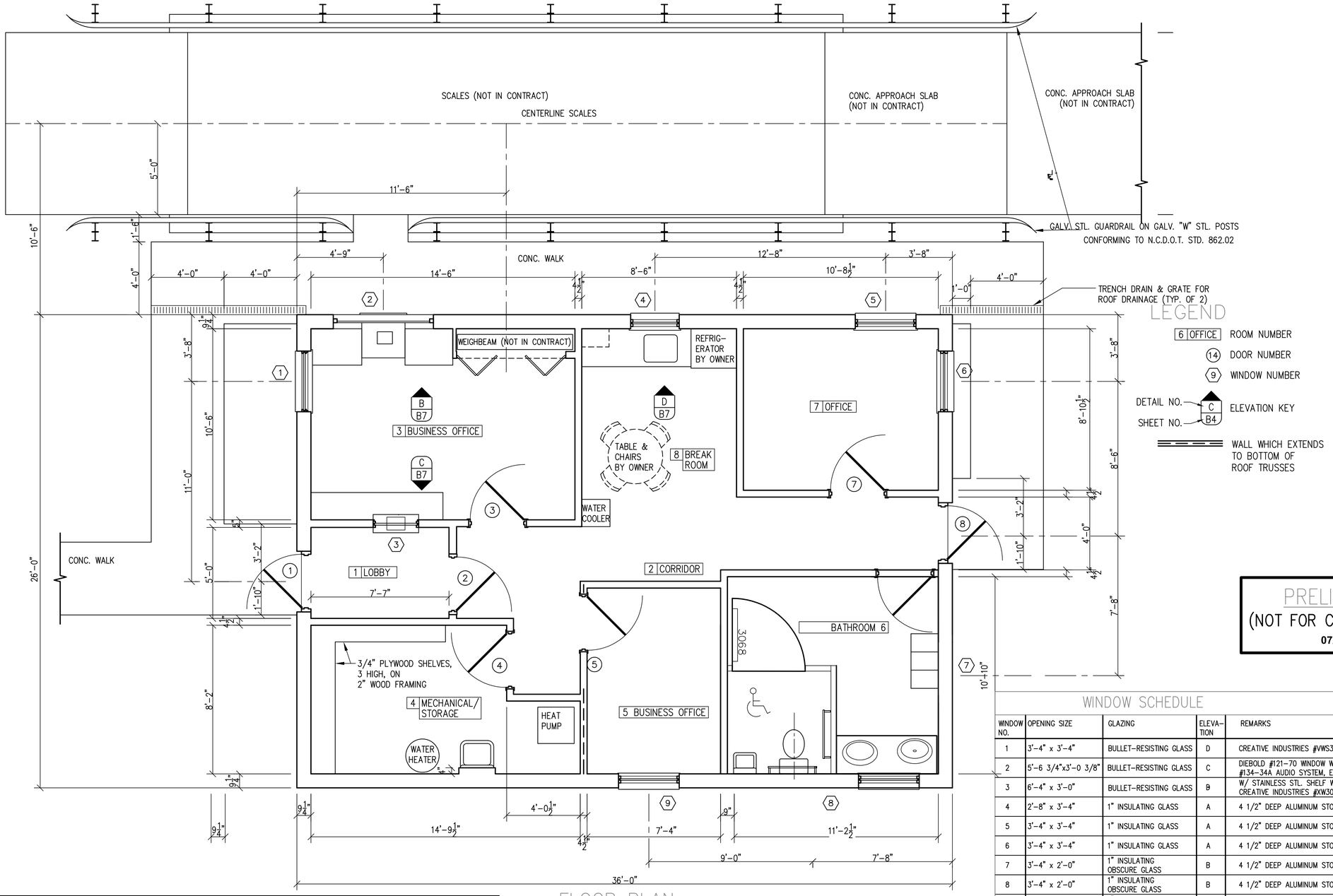

FLOOR PLAN
SCALE: 3/8" = 1'-0"

LEGEND

- 6 OFFICE — ROOM NUMBER
- 14 — DOOR NUMBER
- 9 — WINDOW NUMBER
- DETAIL NO. C / SHEET NO. B4 — ELEVATION KEY
- WALL WHICH EXTENDS TO BOTTOM OF ROOF TRUSSES

PRELIMINARY
(NOT FOR CONSTRUCTION)
07/03/08

WINDOW SCHEDULE

WINDOW NO.	OPENING SIZE	GLAZING	ELEVA-TION	REMARKS
1	3'-4" x 3'-4"	BULLET-RESISTING GLASS	D	CREATIVE INDUSTRIES #VWS3636, BLINDS
2	5'-6 3/4"x3'-0 3/8"	BULLET-RESISTING GLASS	C	DIEBOLD #121-70 WINDOW W/ #121-51 COUNTERETTE #134-34A AUDIO SYSTEM, EXPOSED SHADE BOX
3	6'-4" x 3'-0"	BULLET-RESISTING GLASS	B	W/ STAINLESS STL. SHELF W/ DEAL TRAY CREATIVE INDUSTRIES #XW3036
4	2'-8" x 3'-4"	1" INSULATING GLASS	A	4 1/2" DEEP ALUMINUM STORE FRONT
5	3'-4" x 3'-4"	1" INSULATING GLASS	A	4 1/2" DEEP ALUMINUM STORE FRONT, BLINDS
6	3'-4" x 3'-4"	1" INSULATING GLASS	A	4 1/2" DEEP ALUMINUM STORE FRONT, BLINDS
7	3'-4" x 2'-0"	1" INSULATING OBSCURE GLASS	B	4 1/2" DEEP ALUMINUM STORE FRONT
8	3'-4" x 2'-0"	1" INSULATING OBSCURE GLASS	B	4 1/2" DEEP ALUMINUM STORE FRONT
9	3'-4" x 2'-0"	1" INSULATING OBSCURE GLASS	B	4 1/2" DEEP ALUMINUM STORE FRONT

NOTE: ALL EXTERIOR WINDOW & DOOR GLASS TO BE TINTED GREY.

DOOR SCHEDULE

DOOR NO.	DOOR SIZE	FRAME SIZE	MATERIAL	ELEVA-TION	DETAIL	HARDWARE SET	SIGN	REMARKS
1	3-0x7-0	3-4x7-4	HOLLOW METAL, HOLLOW METAL FRAME	A	D/B3	PASSSAGE LATCH W/ DEADBOLT, CLOSER, KICK PLATES, THRESHOLD, WEATHERSTRIP	–	INSULATING CORE, INSULATING GLASS LITE, PREFINISHED
2	3-0x7-0	3-4x7-2	BULLET-RESISTING HOLLOW METAL, HOLLOW METAL FRAME	B	E/B3	ELECTRIC UNLOCKING LOCKSET, CLOSER	–	WIDE-ANGLE VIEWER, PREFINISHED
3	3-0x7-0	3-4x7-2	HOLLOW METAL, HOLLOW METAL FRAME	A	E/B3	PUSH-BUTTON COMBINATION LOCKSET	–	TEMPERED GLASS LITE PREFINISHED
4	3-0x7-0	3-4x7-2	WOOD, SOLID CORE, HOLLOW METAL FRAME	D	E/B3	STOREROOM LOCKSET	MECHANICAL	PREFINISHED
5	3-0x7-0	3-4x7-2	WOOD, SOLID CORE, HOLLOW METAL FRAME	D	E/B3	PRIVACY LOCKSET	WOMEN	PREFINISHED
6	3-0x7-0	3-4x7-2	WOOD, SOLID CORE, HOLLOW METAL FRAME	D	E/B3	CLOSER, PULL HANDLE, PUSH PLATE, KICK PLATES	MEN	PREFINISHED
7	3-0x7-0	3-4x7-2	WOOD, SOLID CORE, HOLLOW METAL FRAME	D	E/B3	CORRIDOR LOCKSET	–	PREFINISHED
8	3-0x7-0	3-4x7-4	HOLLOW METAL, HOLLOW METAL FRAME		D/B3	STOREROOM LOCKSET, CLOSER, THRESHOLD, WEATHERSTRIP	–	INSULATING CORE, WIDE-ANGLE VIEWER, PREFINISHED

FINISH SCHEDULE

ROOM NO.	FLOOR	BASE	DRYWALL ON WALLS
1	VINYL COMPOSITION TILE	RUBBER	PAINT
2	VINYL COMPOSITION TILE	RUBBER	PAINT
3	CARPET	RUBBER	PAINT
4	VINYL COMPOSITION TILE	RUBBER	PAINT
5	VINYL COMPOSITION TILE	RUBBER	PAINT
6	VINYL COMPOSITION TILE	RUBBER	PAINT
7	VINYL COMPOSITION TILE	RUBBER	PAINT
8	VINYL COMPOSITION TILE	RUBBER	PAINT

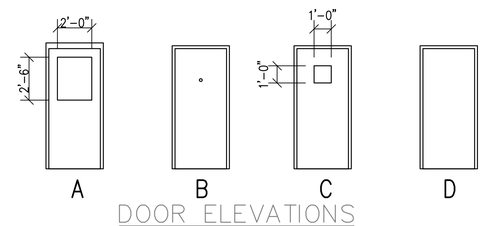

DOOR ELEVATIONS
SCALE: 1/4" = 1'-0"

Municipal Services Engineering Company, P.A.
P.O. BOX 97 GARNER, N.C. 27529 (919) 772-5393
P.O. BOX 349 BOONE, N.C. 28607 (828) 262-1767
P.O. BOX 828 MOREHEAD CITY, N.C. 28557 (252) 726-2481

JAKSON COUNTY TRANSFER STATION
JAKSON COUNTY, NORTH CAROLINA

DATE	BY	REV.	DESCRIPTION

SCALEHOUSE FLOOR PLAN

SCALE:	1" = 40'
DATE:	06/30/08
DRWN. BY:	M. SALIHU
CHKD. BY:	W. SULLIVAN
PROJECT NUMBER	G07113
DRAWING NO.	B-06
SHEET NO.	20 of 29

P:\SolidWaste\G07113-Jackson Co. Transfer Station\CAD\CDS-G07113\G07113-20-B06.DWG, B-06, 1/7/2009 2:13:10 PM, kbussie, KB

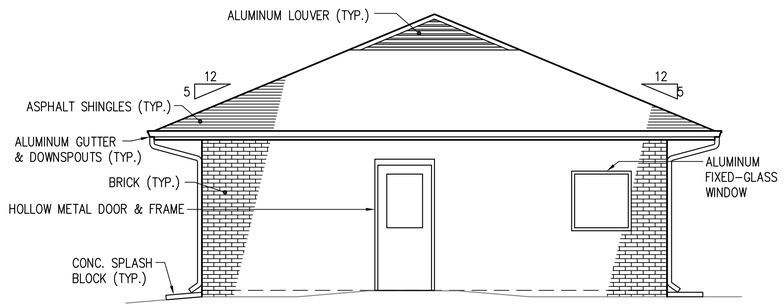

EAST ELEVATION
SCALE: 1/4" = 1'-0"

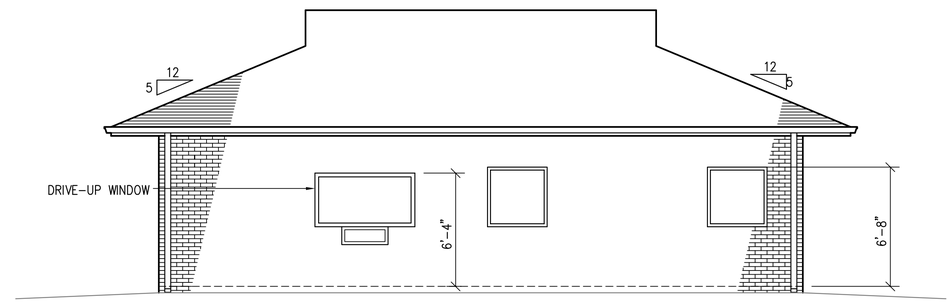

NORTH ELEVATION
SCALE: 1/4" = 1'-0"

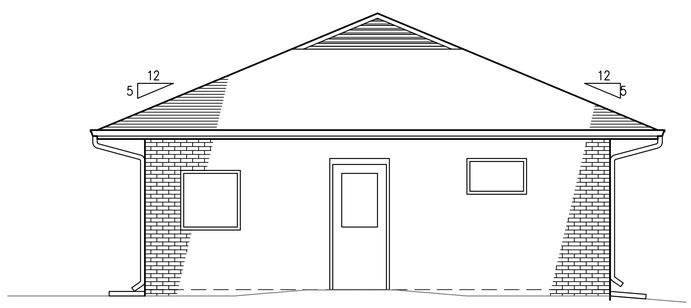

WEST ELEVATION
SCALE: 1/4" = 1'-0"

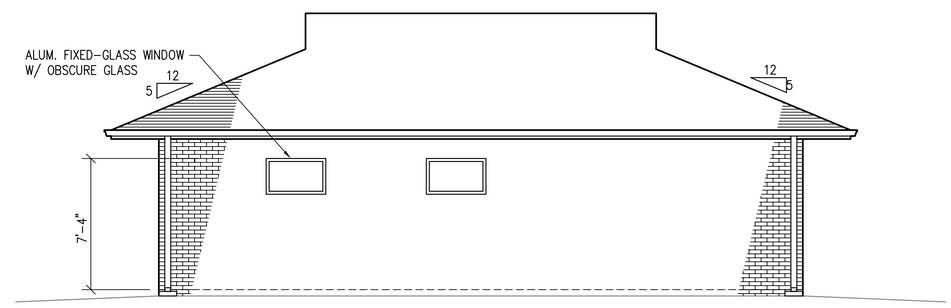

SOUTH ELEVATION
SCALE: 1/4" = 1'-0"

PRELIMINARY
(NOT FOR CONSTRUCTION)
09/14/08

Municipal Services Engineering Company, P.A.
P.O. BOX 97 GARNER, N.C. 27529 (919) 772-5393
P.O. BOX 278 MOREHEAD CITY, N.C. 28557 (252) 726-9481
P.O. BOX 349 BOONE, N.C. 28607 (828) 262-1767

JAKSON COUNTY
TRANSFER STATION

JAKSON COUNTY, NORTH CAROLINA

DATE	BY	REV.	DESCRIPTION

BUILDING
ELEVATIONS

SCALE:	1/4" = 1' - 0"
DATE:	06/30/08
DRWN. BY:	M. SALIHU
CHKD. BY:	W. SULLIVAN
PROJECT NUMBER	G07113
DRAWING NO.	B-07
SHEET NO.	21 of 29

P:\SolidWaste\G07113-Jackson Co. Transfer Station\CAD\CD'S-G07113\G07113-21-B07.DWG, B-07, 1/7/2009 2:16:25 PM, kbussie, KB

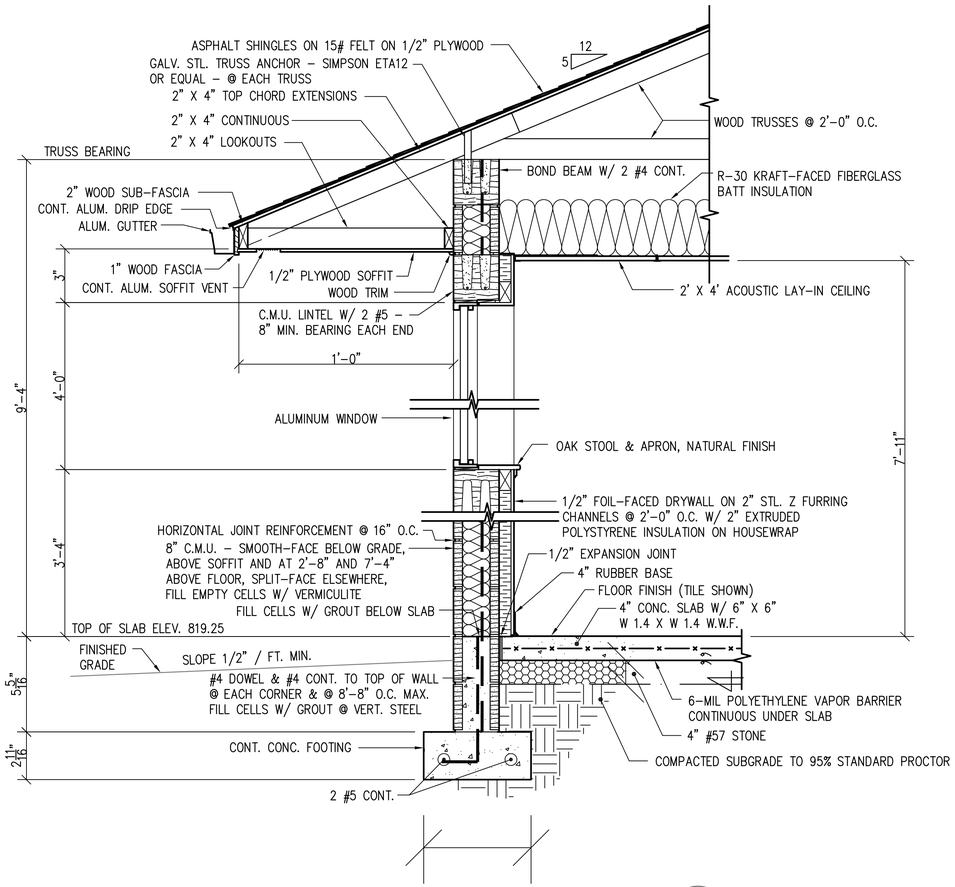

TYPICAL EXTERIOR WALL DETAIL (A / B5)
SCALE: 1" = 1'-0"

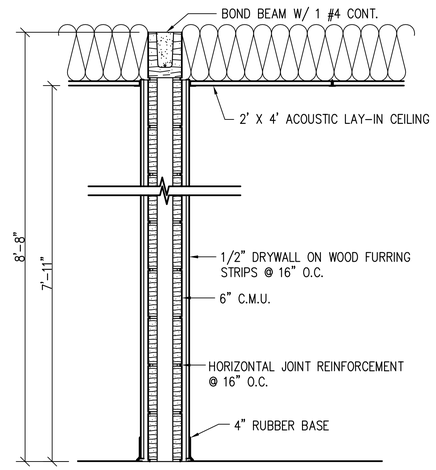

TYPICAL INTERIOR WALL DETAIL (B / B5)
SCALE: 1" = 1'-0"

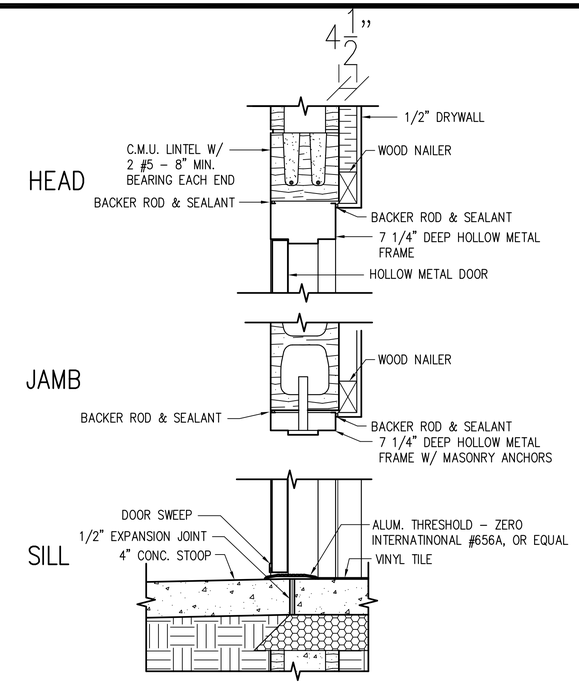

EXTERIOR DOOR DETAIL (C / B5)
SCALE: 1 1/2" = 1'-0"

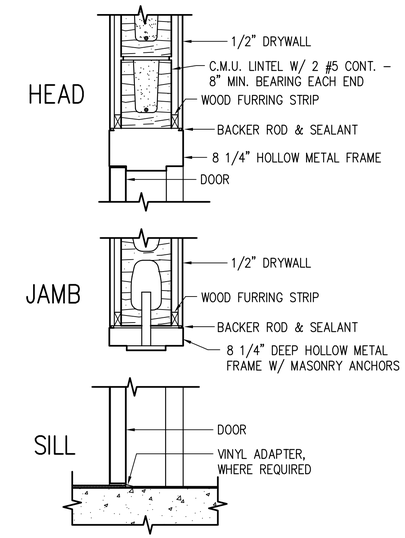

INTERIOR DOOR DETAIL (D / B5)
SCALE: 1 1/2" = 1'-0"

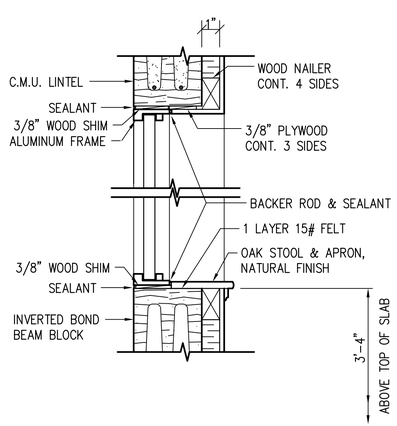

TYPICAL WINDOW DETAIL (E / B5)
SCALE: 1 1/2" = 1'-0"

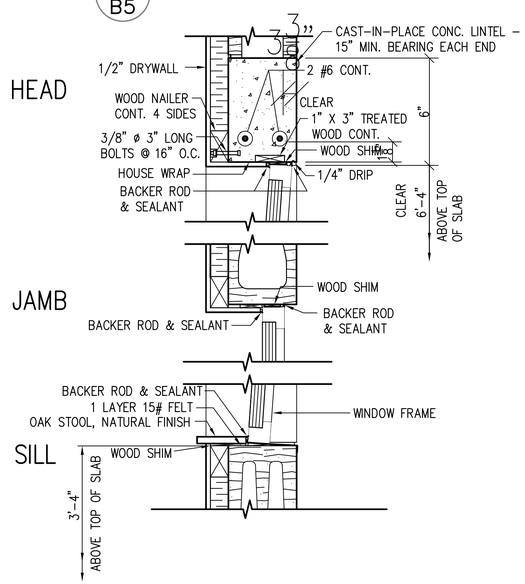

DRIVE-UP WINDOW DETAIL (F / B5)
SCALE: 1 1/2" = 1'-0"

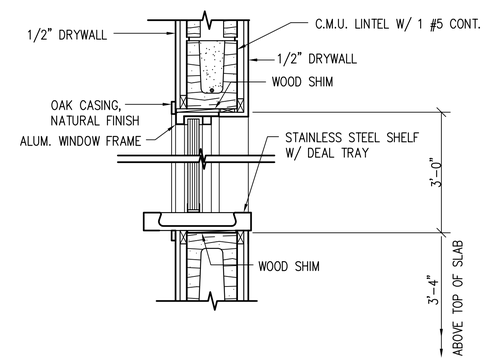

PASS-THROUGH WINDOW DETAIL (G / B5)
SCALE: 1 1/2" = 1'-0"

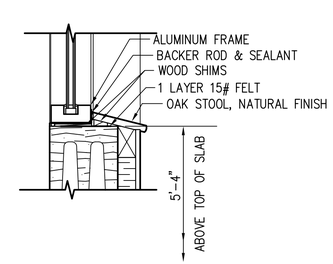

HIGH WINDOW DETAIL (H / B5)
SCALE: 1 1/2" = 1'-0"

BID ALTERNATE 1

PRELIMINARY
(NOT FOR CONSTRUCTION)
09/14/08

MUNICIPAL ENGINEERING SERVICES CO., P.A. CONSULTING ENGINEERS BOONE, N.C. GARNER, N.C.			
PROJECT SOLID WASTE HANDLING AND TRANSFER FACILITY			
OWNER COUNTY OF IREDELL, N.C.			
TITLE SCALE HOUSE DETAILS			DRAWING NUMBER B-08
SCALE AS SHOWN	DRWN. BY R.O.J.	PROJECT NO. G95148	SHEET NUMBER 22 of 29
DATE 9-16-96	CHKD BY J.D.W.		

P:\SolidWaste\G07113-Jackson Co. Transfer Station\CAD\CDS-G07113\G07113-22-B08.DWG, B-08, 1/7/2009 2:19:39 PM, kbussie, KB

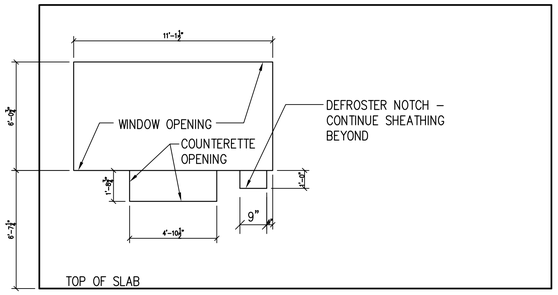

WALL CONSTRUCTION

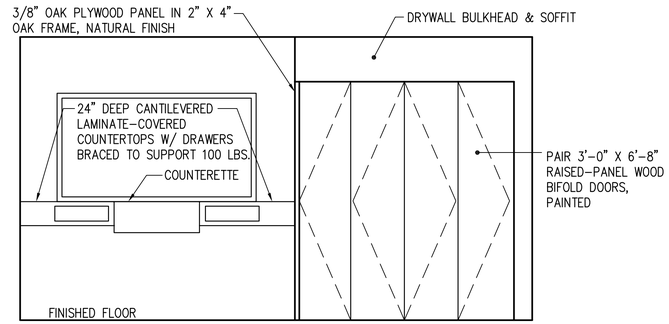

CASEWORK

DRIVE-UP WINDOW ELEVATION (A / B5)

NOT TO SCALE

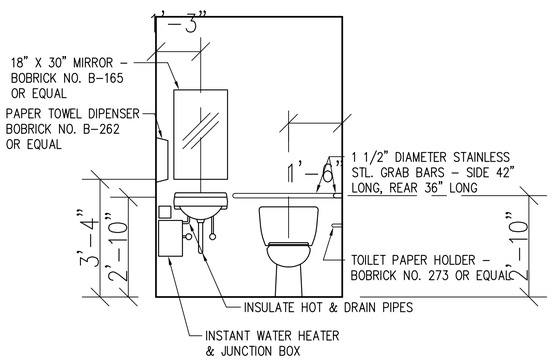

REST ROOM ELEVATION (B / B5)

NOT TO SCALE

PRELIMINARY
(NOT FOR CONSTRUCTION)
09/14/08

BID ALTERNATE 1

Municipal Services Engineering Company, P.A.
P.O. BOX 97 GARNER, N.C. 27529 (919) 772-5393
P.O. BOX 349 BOONE, N.C. 28607 (828) 262-1767

TRANSFER STATION JACKSON COUNTY

DATE	BY	REV.	DESCRIPTION

SCALE HOUSE DETAILS

SCALE: 1/2" = 1'-0"
DATE: 07-03-08
DRWN. BY: MS
CHKD. BY: J.D.W.
PROJECT NUMBER G07113
DRAWING NO. B09
SHEET NO. 23 OF 29

P:\SolidWaste\G07113-Jackson Co. Transfer Station\CAD\CD'S-G07113\G07113-23-B09.DWG, B-09, 1/7/2009 2:22:43 PM, kbussie, KB

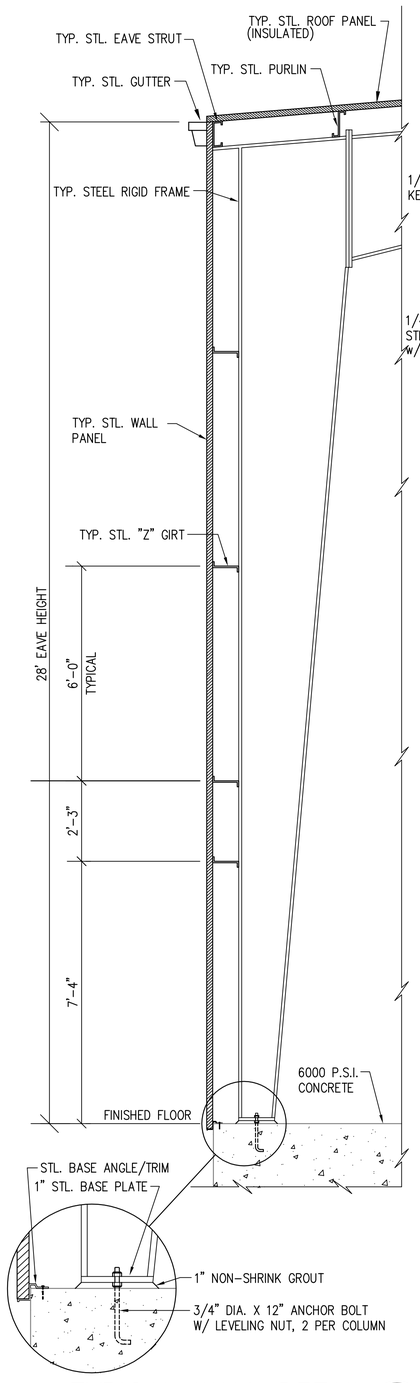

TYPICAL WALL DETAIL (A / B1)
SCALE: 1/2" = 1'-0"

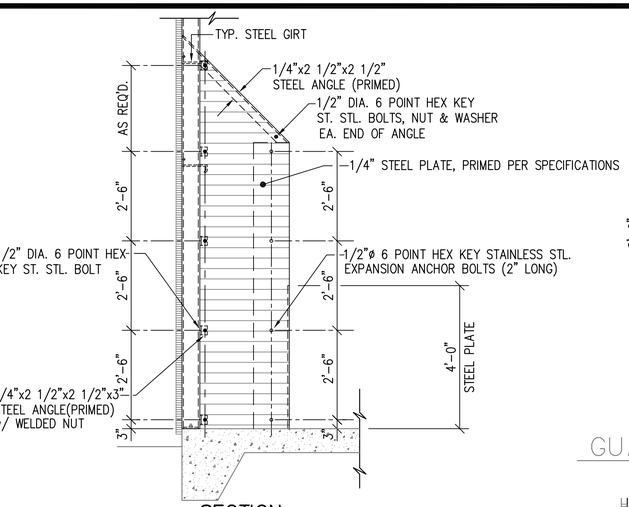

SECTION

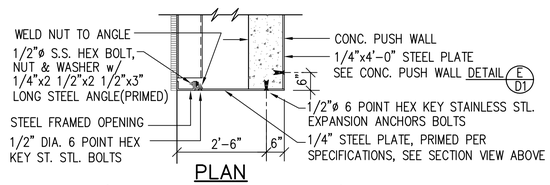

PLAN
(AT FRAMED OPENINGS)

STEEL COVER PLATE DETAIL (B / B2)
SCALE: 1/2" = 1'-0"

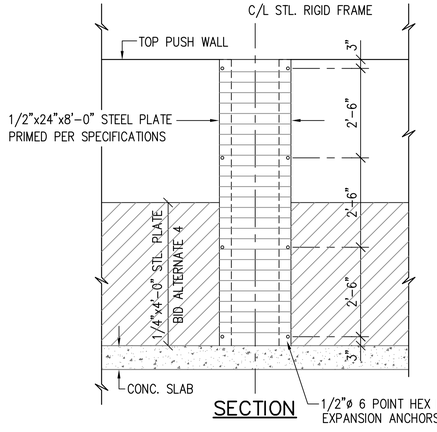

SECTION

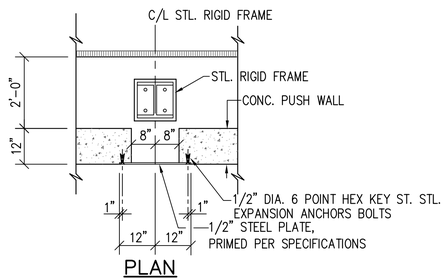

PLAN
(AT RIGID FRAMES)

STEEL COVER PLATE DETAIL (C / B2)
SCALE: 1/2" = 1'-0"

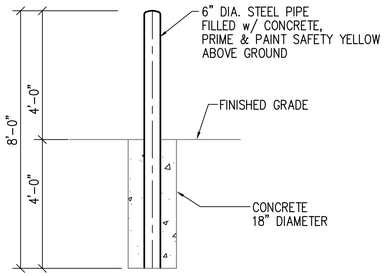

GUARD PIPE DETAIL (D / B2)
NOT TO SCALE

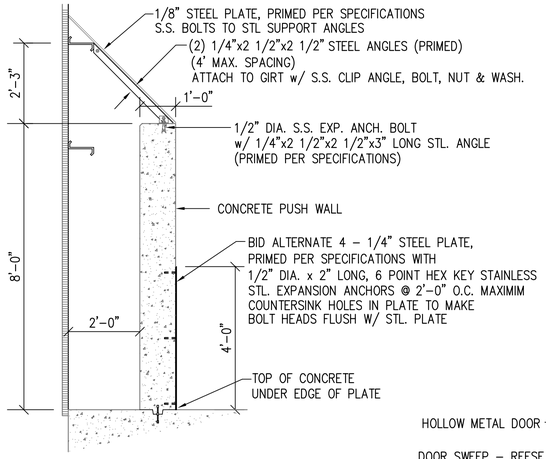

CONCRETE PUSH WALL DETAIL (E / B2)
SCALE: 1/2" = 1'-0"

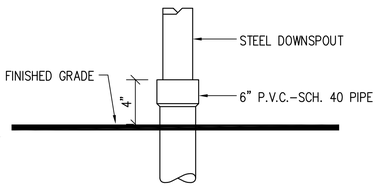

DOWNSPOUT CONNECTION DETAIL (F / B1)
SCALE: 1" = 1'-0"

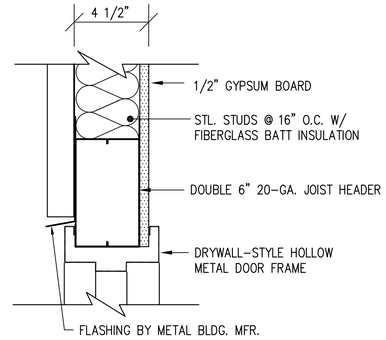

EXTERIOR DOOR HEAD DETAIL (G / B2)
SCALE: 3"= 1'-0"

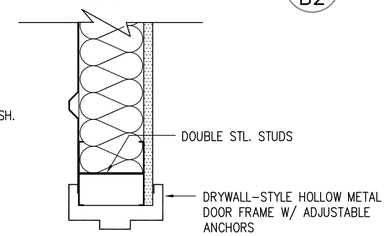

EXTERIOR DOOR JAMB DETAIL (H / B2)
SCALE: 3"= 1'-0"

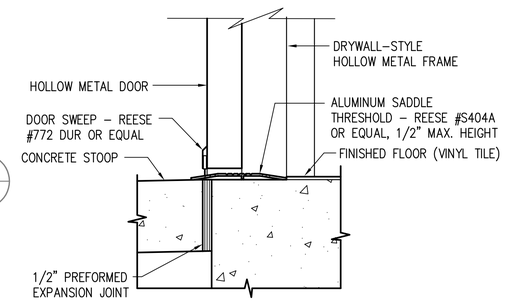

EXTERIOR DOOR SILL DETAIL (J / B2)
SCALE: 3"= 1'-0"

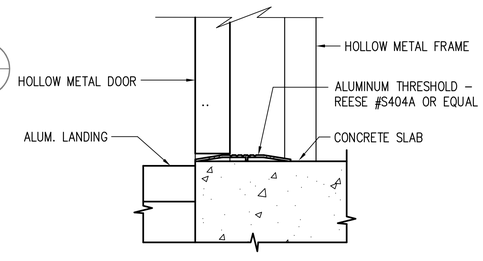

EXTERIOR DOOR SILL DETAIL (K / B2)
SCALE: 3"= 1'-0"

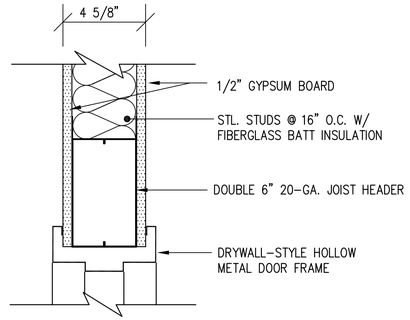

INTERIOR DOOR HEAD DETAIL (L / B2)
SCALE: 3"= 1'-0"

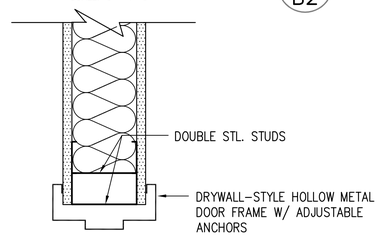

INTERIOR DOOR JAMB DETAIL (M / B2)
SCALE: 3"= 1'-0"

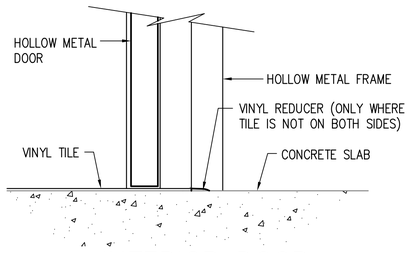

INTERIOR DOOR SILL DETAIL (N / B2)

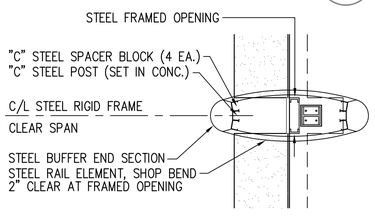

NOTE: GUARDRAIL COMPONENTS N.C.D.O.T. STANDARDS.

BARRICADE DETAIL (P / B2)
SCALE: 1/2"= 1'-0"

NORTH CAROLINA PROFESSIONAL SEAL 6282 ENGINEER JAMES D. MCDONALD

MUNICIPAL ENGINEERING SERVICES CO., P.A. CONSULTING ENGINEERS			
BOONE, N.C.		GARNER, N.C.	
PROJECT	SOLID WASTE HANDLING AND TRANSFER FACILITY		
OWNER	COUNTY OF IREDELL, N.C.		
TITLE	MISCELLANEOUS DETAILS		DRAWING NUMBER D1
SCALE AS SHOWN	DRWN. BY R.O.J.	PROJECT NO. G95148	SHEET NUMBER 24of 29
DATE 9-16-96	CHKD BY J.D.W.		

P:\SolidWaste\G07113-Jackson Co. Transfer Station\CAD\CD'S-G07113\G07113-24-D1.DWG, D1, 1/7/2009 2:26:05 PM, kbussis, kB

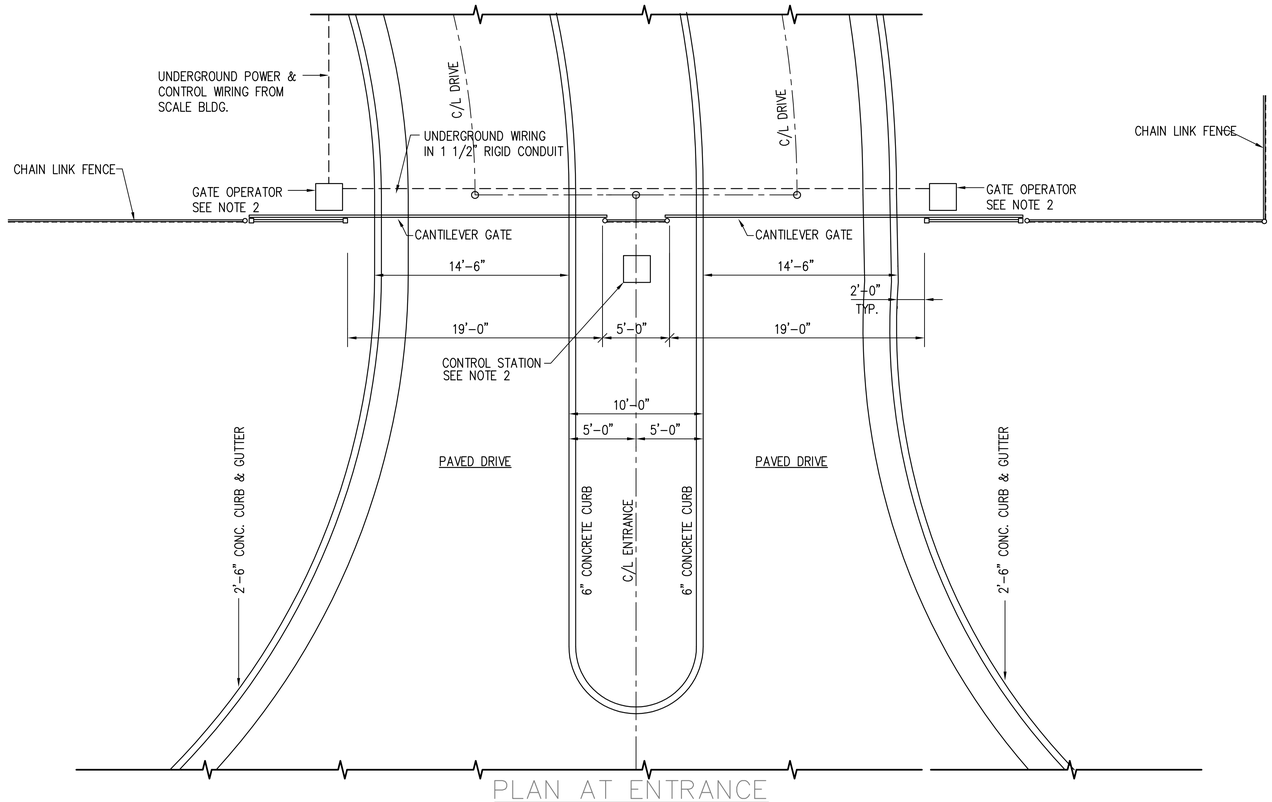

PLAN AT ENTRANCE
SCALE: 3/16" = 1'-0"

NOTES:

1. GATE OPERATORS SHALL BE ELECTRIC SLIDE GATE OPERATORS, MODEL 550 BY STANLEY DOOR SYSTEMS, OR EQUAL, WITH 1/2 HORSEPOWER, 115 VOLT SINGLE PHASE, HIGH-STARTING-TORQUE, REVERSIBLE MOTORS PROTECTED AGAINST OVERLOAD AND UNDERVOLTAGE. EACH OPERATOR SHALL HAVE AN ADJUSTABLE, SOLENOID-ACTIVATED DISC-TYPE BRAKE AND A MANUAL DISCONNECT. OPERATORS SHALL INCORPORATE AN AUDIBLE ALARM SYSTEM. PROVIDE 1 CONTROL STATION IN SCALE HOUSE FOR EACH GATE AND 1 SINGLE-CODE DIGITAL KEYPAD ON GOOSENECK STAND AND 1 RADIO RECEIVER WITH ANTENNA AND 3 RADIO TRANSMITTERS FOR VEHICLES FOR 1 GATE. ENSURE COMPATIBLITY OF OPERATORS WITH GATES PROVIDED.

NORTH CAROLINA PROFESSIONAL SEAL 8916 ENGINEER JIMMIE A. BELL

Municipal Services Engineering Company, P.A.
P.O. BOX 97 GARNER, N.C. 27529 (919) 772-5393
P.O. BOX 349 BOONE, N.C. 28607 (828) 262-1767

TRANSFER STATION JACKSON COUNTY

DATE	BY	REV.	DESCRIPTION

SCALE HOUSE DETAILS

SCALE:	3/16" = 1'-0"
DATE:	05-14-08
DRWN. BY:	MS
CHKD. BY:	W. SULLIVAN
PROJECT NUMBER	G07113
DRAWING NO.	D2
SHEET NO.	25 OF 29

P:\SolidWaste\G07113-Jackson Co. Transfer Station\CADD\CD'S-G07113\G07113-25-D2.DWG, D2, 1/7/2009 2:28:27 PM, kbussie, KB

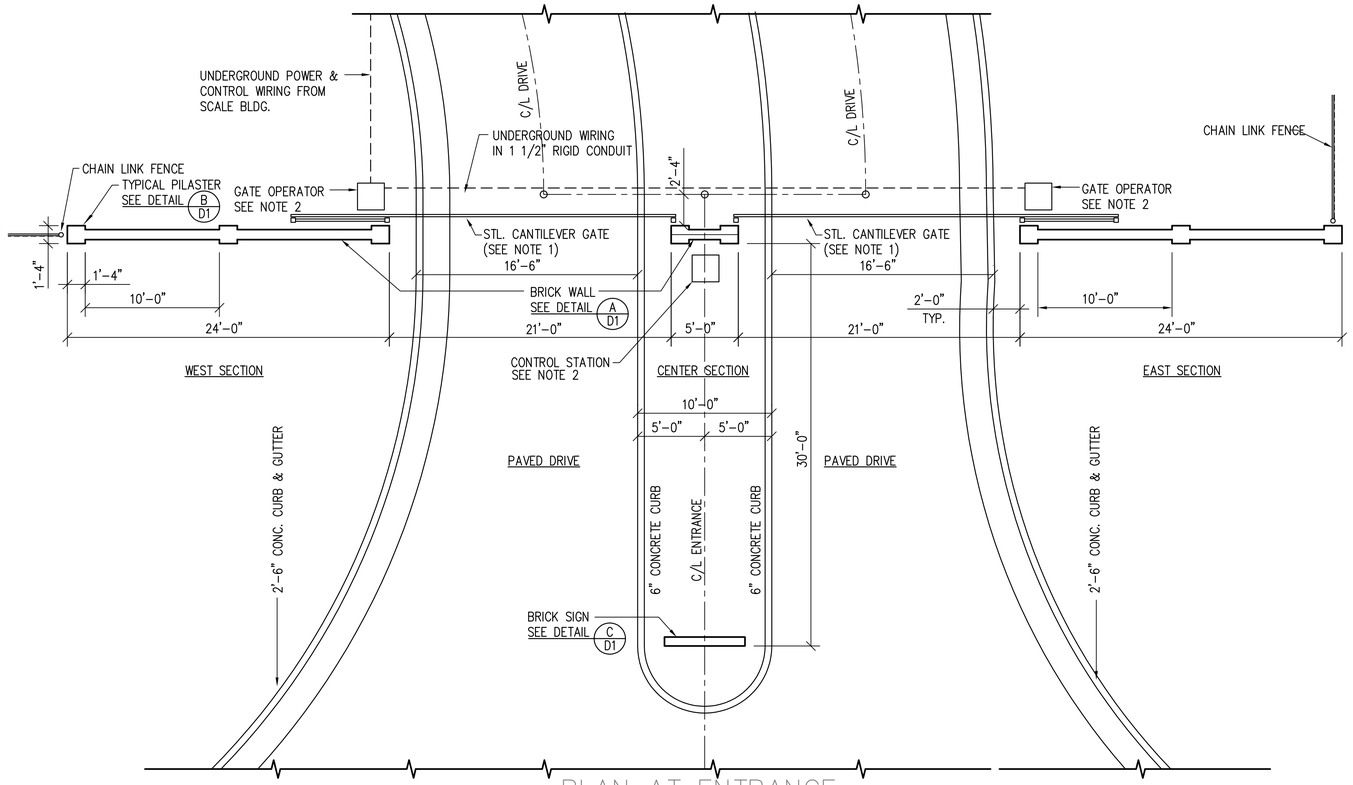

PLAN AT ENTRANCE
SCALE: 3/16" = 1'-0"

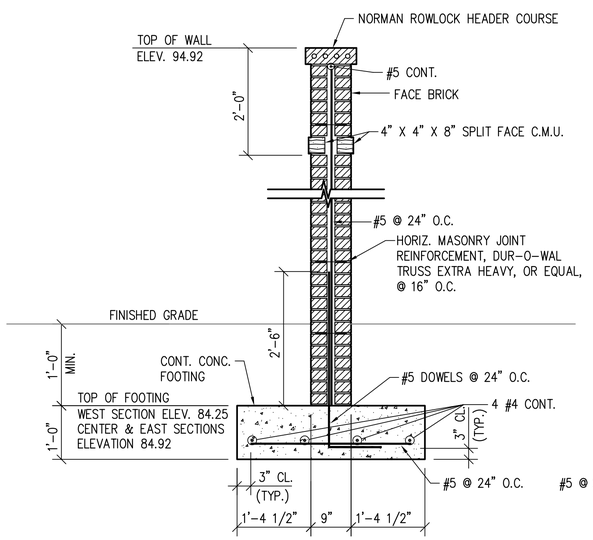

BRICK WALL DETAIL A D3
SCALE: 3/4" = 1'-0"

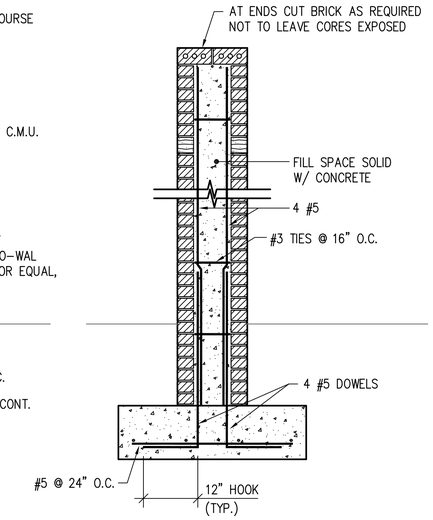

PILASTER DETAIL B D3
SCALE: 3/4" = 1'-0"

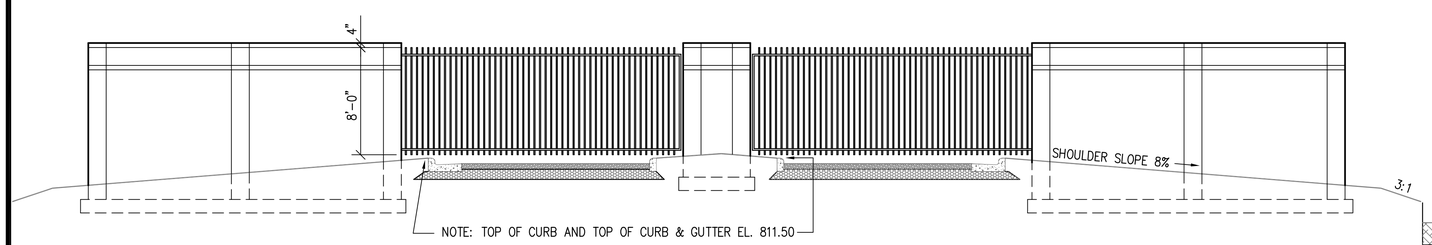

WALL & GATE ELEVATION
SCALE: 3/16" = 1'-0"

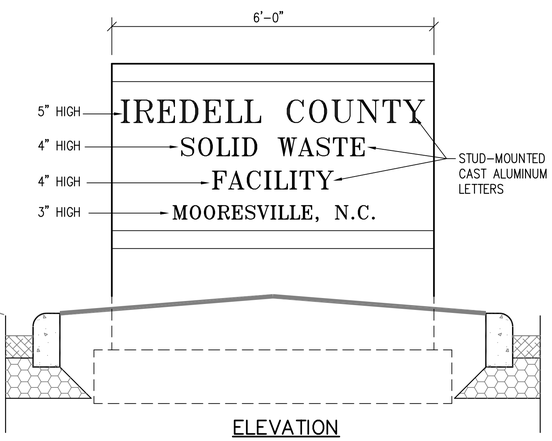

ELEVATION

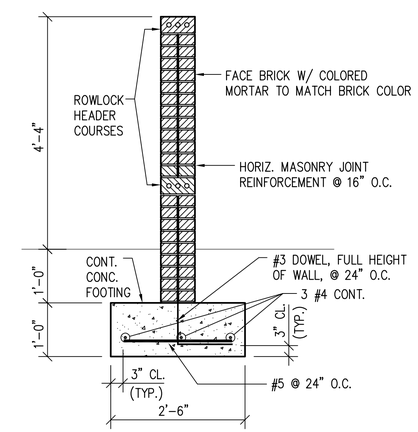

SECTION

NOTE: SUBMIT MANUFACTURER'S DATA FOR CAST ALUMINUM LETTERS. SIZE, STYLE, COLOR AND FINISH TO BE SELECTED BY THE ENGINEER.

ENTRANCE SIGN DETAIL C G1
SCALE: 3/4" = 1'-0"

NOTES:

1. STEEL CANTILEVER GATES SHALL BE ORNATMENTAL PICKET GATES, ESTATE STYLE PATTERN "K", 3 RAIL, BY MONUMENTAL IRON WORKS, OR EQUAL. FRAME MEMBERS SHALL BE HOT-ROLLED STRUCTURAL STEEL CHANNELS OR TUBES, 1 3/8" MINIMUM DIMENSION, .120" MINIMUM WALL THICKNESS, PUNCHED AS REQUIRED TO RECEIVE PICKETS, WELDED TOGETHER. PICKETS SHALL BE SQUARE TUBULAR MEMBERS OF HOT-ROLLED STRUCTURAL STEEL CONFORMING TO ASTM 513, 1" WIDTH, 16 GAUGE WALL THICKNESS, WITH FLAT TOPS, SPACED 5" ON CENTERS, ATTACHED TO RAILS WITH INDUSTRIAL DRIVE RIVETS. ALL STEEL PARTS SHALL HAVE A HOT-DIP GALVANIZED G90 COATING CONFORMING TO ASTM A 525 AND A BLACK BAKED POLYESTER POWDER COAT FINISH.
2. GATE OPERATORS SHALL BE ELECTRIC SLIDE GATE OPERATORS, MODEL 550 BY STANLEY DOOR SYSTEMS, OR EQUAL, WITH 1/2 HORSEPOWER, 115 VOLT SINGLE PHASE, HIGH-STARTING-TORQUE, REVERSIBLE MOTORS PROTECTED AGAINST OVERLOAD AND UNDERVOLTAGE. EACH OPERATOR SHALL HAVE AN ADJUSTABLE, SOLENOID-ACTIVATED DISC-TYPE BRAKE AND A MANUAL DISCONNECT. OPERATORS SHALL INCORPORATE AN AUDIBLE ALARM SYSTEM. PROVIDE 1 CONTROL STATION IN SCALE HOUSE FOR EACH GATE AND 1 SINGLE-CODE DIGITAL KEYPAD ON GOOSENECK STAND AND 1 RADIO RECEIVER WITH ANTENNA AND 3 RADIO TRANSMITTERS FOR VEHICLES FOR 1 GATE. ENSURE COMPATIBLITY OF OPERATORS WITH GATES PROVIDED.

NORTH CAROLINA PROFESSIONAL SEAL 8916 ENGINEER JIMMIE A. BELL

MUNICIPAL ENGINEERING SERVICES CO., P.A. CONSULTING ENGINEERS BOONE, N.C. GARNER, N.C.			
PROJECT SOLID WASTE HANDLING AND TRANSFER FACILITY			
OWNER COUNTY OF IREDELL, N.C.			
TITLE MISCELLANEOUS DETAILS			DRAWING NUMBER D3
SCALE AS SHOWN	DRWN. BY R.O.J.	PROJECT NO. G95148	SHEET NUMBER 26 of 29
DATE 2-19-96	CHKD BY J.D.W.		

P:\SolidWaste\C07113-Jackson Co. Transfer Station\CAD\CD'S-C07113\C07113-26-D3.DWG, D3, 1/7/2009 2:29:49 PM, klussie, kB