Permit No.	Date	DIN
3424	**December 15, 2010**	**12491**

RECEIVED
December 15, 2010
Solid Waste Section
Asheville Regional Office

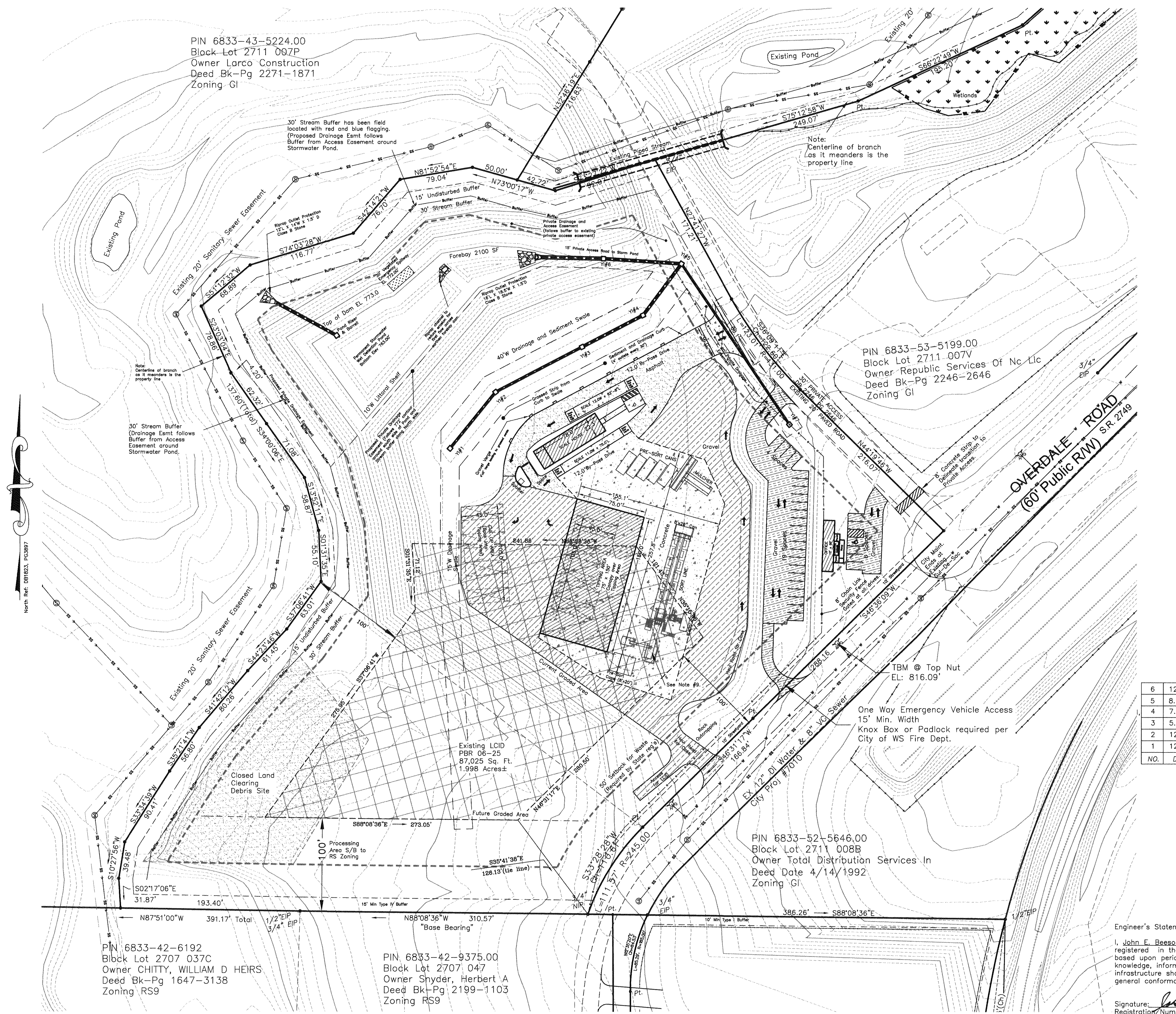

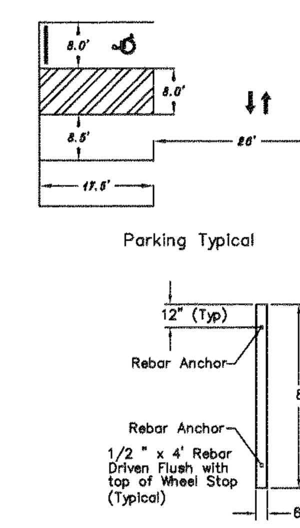

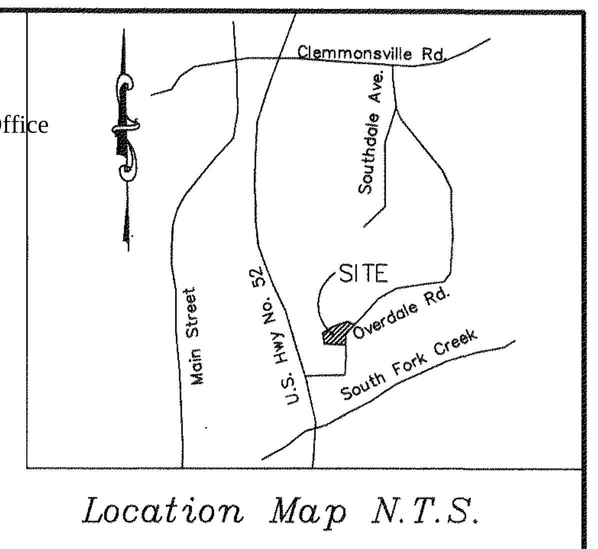

Location Map N.T.S.

GENERAL NOTES:

1. This map is a compilation of information from deeds, county tax information, structures and topographic information furnished by the Forsyth County GIS.
2. All utilities indicated are provided from Forsyth County GIS and Utilities Administration files. Manholes and water infrastructure on ground have been field located.
3. No work may be performed inside the 30' stream buffer until Corp of Engineers permitting and City of WS buffer variance is issued.
4. Stream has been field located. 30' Stream Buffers have been located with red and blue flagging.
5. Owner to obtain driveway permit prior to construction.
6. Wetlands have been delineated as shown on plans.
7. A 50' grading easement for the North Site will be required prior to grading operations beginning on adjacent owner.
8. Existing LCID to be used outside of graded area only.
9. The sorting line and area near the sorting line hopper shall be covered by roof system or other fixed canopy structures to prevent rainwater from contacting materials being processed.

Line Legend

- W — Public Water Line
- SS — Public Sanitary Sewer Line
- E — Underground Electric Line
- GAS — Underground Gas Line
- D — Drainage Limits
- Fence
- DL >> — Ditchline
- WL — Wetlands Boundary
- Buffer — Stream or Creek Buffer

Symbol Legend

- Pt. Point (As Shown)
- I.P.S. Iron Pin Set (3/4" conduit)
- E.I.P. Existing Iron Pin (As Shown)
- Stone (Found)
- NCDOT Monument/Disc
- Utility Pole
- Fire Hydrant
- Water Valve
- CC Control Corner
- FG FG Flush with ground
- AG AG x.xx' Above ground(Distance in ft.)
- UG UG x.xx' Underground(Distance in ft.)
- Sanitary Sewer Manhole
- Electrical Pedestal
- Wetlands
- Specimen Tree (symbols vary)
- Telephone Pedestal
- Electrical Transformer Box

ZONING

Existing Zoning: GI
Proposed Zoning: GI
Type of Review Requested: Inspections
Jurisdiction: City Of Winston-Salem

SITE SIZE AND COVERAGES

Total Acreage: 10.227 ± Acres. 445,487 sq ft.
Site Coverages:
Building to Land 0.9 %
Pavement to Land: 21.0 %
Open Space: 78.1 %
(Total = 100%)
Building Sq. Footage (Max.): 12000 Sq. Ft.
Building Height: 40 Ft.
Public Streets: N/A (approx.)

INFRASTRUCTURE

Water: X Public ____ Private
Sewer: X Public ____ Private
Streets: ____ Public X Private

OFF-STREET PARKING

Proposed Uses: Recycling Plant
Parking Calc.: 1 Spaces/emp + 2 spaces
Required Parking: 29 Spaces.
Parking Provided: 32 Spaces.

BUFFERYARDS (if applicable)

Adjoining Zoning: GI and RS9
Type Required: Type IV
Width Provided: 15' Min.
Fence Option: ____ Yes X No

NO.	DATE	DESCRIPTION	BY
6	12.10.10	As-built	ATC
5	8.17.10	Revised HC parking space	ATC
4	7.1.10	Added Note #9 on roof system	ATC
3	5.3.10	Revised Site layout	ATC
2	12.18.09	Note on Fire Access	ATC
1	12.8.09	Updates and revisions	ATC

NORTH CAROLINA PROFESSIONAL SEAL ENGINEER 4898 JOHN EDWARD BEESON

CORP#: C-1144

NOT AN ACTUAL SURVEY

Overall Site Plan

Overdale Recycling Plant; PERMIT #34-24

ABBEY GREEN INC.
PO Box 12339
Winston-Salem, NC 27117
(336) 784-1890
bryanlj@myway.com

Scale: 1" = 50'

FIELD WORK BY: Others		CHECKED BY: JEB
Block / Lot: 2711 007W, 2711 007T, 2707 042A, 2711 007U	PIN: 6833-52-1826.00, 6833-42-9505.00, 6833-52-3269.00, 6833-53-3585.00	Deed Book/Page: DB 2175 PG 3070, DB 2576 PG 2117, DB 2267 PG 2420, DB 2576 PG 2117
TAX MAP: 630830	CITY: Winston-Salem	COUNTY: Forsyth
STATE: North Carolina	DATE: 08-19-2008	SHEET NUMBER: 1 of 2
JOB NUMBER: 08100.051	DRAWN BY: ATC	

Engineer's Statement of Completion

I, John E. Beeson, P.E., a Professional Engineer, duly registered in the State of North Carolina, hereby state, based upon periodic inspections, that to the best of my knowledge, information, and belief, all public and private infrastructure shown on this plan have been installed in general conformance with the approved plans.

Signature: [signature]
Registration Number: 4898
Date: 12-13-10

BEESON ENGINEERING INC.
ENGINEERS SURVEYORS PLANNERS
503 HIGH STREET
WINSTON-SALEM, NC 27101
TELEPHONE: (336) 748-0071
FAX: (336) 748-0470
www.beesonengineering.com

Engineer's Statement of Completion

I, John E. Beeson, P.E., a Professional Engineer, duly registered in the State of North Carolina, hereby state, based upon periodic inspections, that to the best of my knowledge, information, and belief, all public and private infrastructure shown on this plan have been installed in general conformance with the approved plans.

Signature: [signature]
Registration Number: 4898
Date: 12-13-10

NORTH CAROLINA PROFESSIONAL ENGINEER SEAL 4898 JOHN EDWARD BEESON

CORP#: C-1144

NO.	DATE	DESCRIPTION	BY
4	12.10.10	As-Built	ATC
3	5.3.10	Revised Site layout	ATC
2	12.18.09	Note on Fire Access	ATC
1	12.8.09	Updates and revisions	ATC

NOT AN ACTUAL SURVEY

Overall Site Plan
Overdale Recycling Plant; PERMIT #34-24

ABBEY GREEN INC.
PO Box 12339
Winston-Salem, NC 27117
(336) 784-1890
bryanlj@myway.com

Scale: 1" = 100'
100 50 0 50 100 200

FIELD WORK BY: Others		CHECKED BY: JEB
Block / Lot: 2711 007W, 2711 007T, 2707 042A, 2711 007U	PIN: 6833-52-1826.00, 6833-42-9505.00, 6833-52-3269.00, 6833-53-3585.00	Deed Book/Page: DB 2175 PG 3070, DB 2576 PG 2117, DB 2267 PG 2420, DB 2576 PG 2117
TAX MAP: 630830	CITY: Winston-Salem	COUNTY: Forsyth
STATE: North Carolina	DATE: 08-19-2008	SHEET NUMBER: 2 of 2
JOB NUMBER: 08100.051	DRAWN BY: ATC	

BEESON ENGINEERING INC.
ENGINEERS SURVEYORS PLANNERS
503 HIGH STREET
WINSTON-SALEM, NC 27101
TELEPHONE: (336) 748-0071
FAX: (336) 748-0470
www.beesonengineering.com

\\Server\storage\NewData\AutoCAD\Land Projects R2\2008\Misc\08100051\AS-Builts\08100.051 SP.dwg, 12/14/2010 8:48:48 AM

STORM DRAINAGE SEWER – DRAINAGE SWALE

NOTES:
1. Contours shown at 1' intervals.
2. HDPE pipe indicated is double-walled, water tight pipe.

STORM DRAINAGE SEWER – ROAD DRAINAGE

Engineer's Statement of Completion

I, John E. Beeson, P.E., a Professional Engineer, duly registered in the State of North Carolina, hereby state, based upon periodic inspections, that to the best of my knowledge, information, and belief, all work was performed in accordance with the approved plans.

Signature: _____
Registration Number: 4898
Date: 11-30-10

REV. #	DATE	DESCRIPTION
1	7.1.09	Update and revise plans
2	8.12.09	Chg Stormwater redlines
3	11.12.09	Chg Stormwater redlines and revised elevations
4	2.26.10	Revised elevations for Stormwater pond
5	4.5.10	Revised access road and drainage
6	5.3.10	Revised West fill slope and site layout
7	11.4.10	As-Builts
8	11.30.10	As-Builts; add forebay riprap channel

Overdale Recycling Plant

Owner/Developer: ABBEY GREEN INC.
4400 Silas Creek Pkwy, Suite 301
Winston-Salem, NC 27104
(336) 784-1890
bryan@mywsg.com

PIN NUMBER	PARCEL ID	ZIP CODE
6886-42-9686.00	4686	27127
6886-52-3686.00	4686	27127

CITY: Western Salem
STATE: North Carolina
TOWNSHIP: Winston
COUNTY: Forsyth

STORMWATER MANAGEMENT PLAN – STORM SEWER

FIELD WORK BY:	CHECKED BY:	DRAWN BY:	SHEET NUMBER:
PJ,DH	JEB	ATC	5 of 8

Horizontal Scale: 1" = 40'
Vertical Scale: 1" = 4'

DATE: 7/1/2009 | JOB NUMBER: 08100.051

BEESON ENGINEERING INC.
ENGINEERS PLANNERS SURVEYORS
503 HIGH STREET
WINSTON-SALEM, NC 27101
TELEPHONE (336)748-0071
FAX NUMBER (336)748-0470
www.beesonengineering.com
contact@beesonengineering.com

NORTH CAROLINA Professional SEAL 4898 Engineer JOHN EDWARD BEESON

CORP# C-1144

Project # 08100.051: OVERDALE RECYCLING PLANT, Sheet 5 of 8, Storm Sewer, 8/12/2009; REV 5.3.10

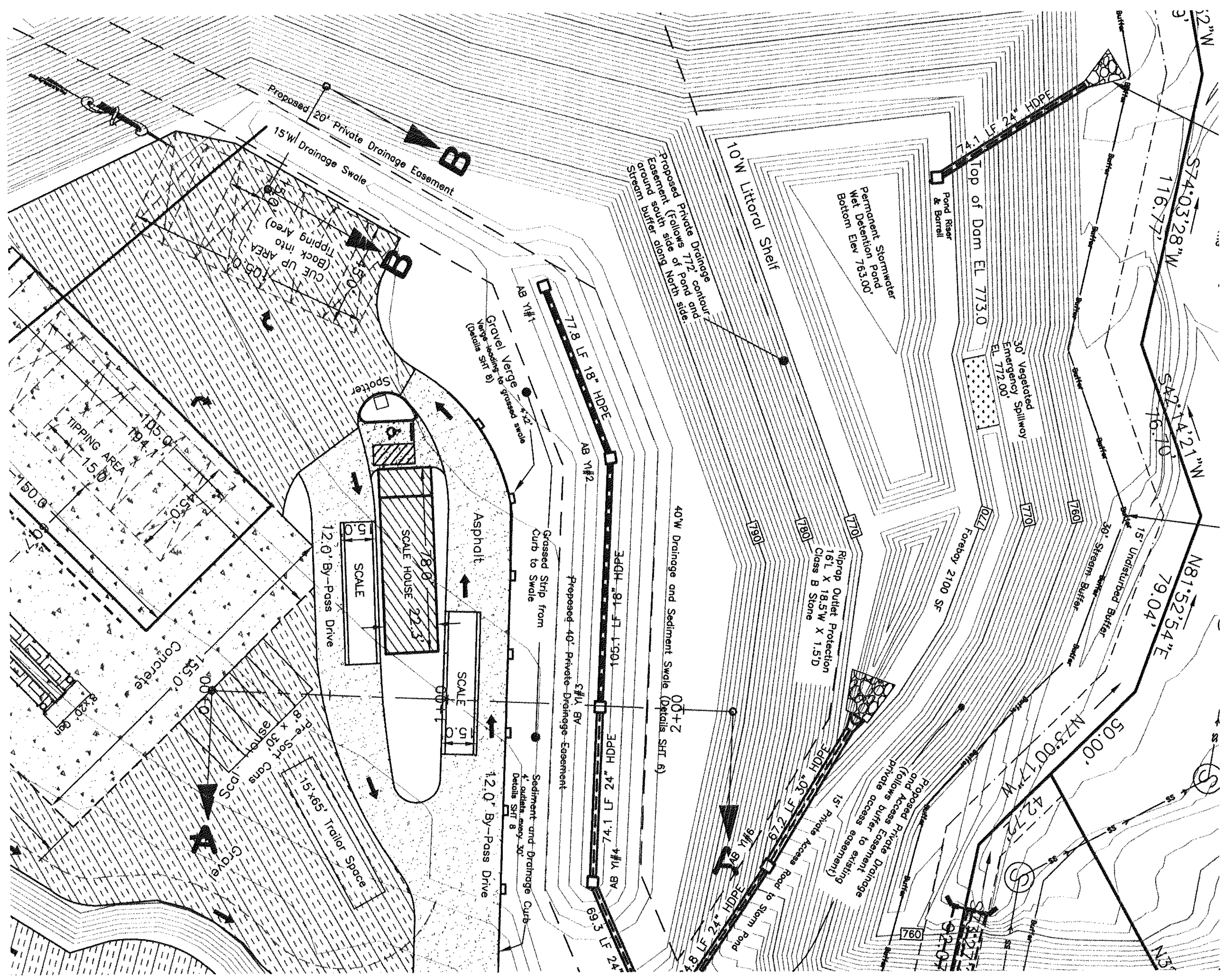

NOTES:
1. Contours shown at 1' intervals.
2. HDPE pipe indicated is double-walled, water tight pipe.

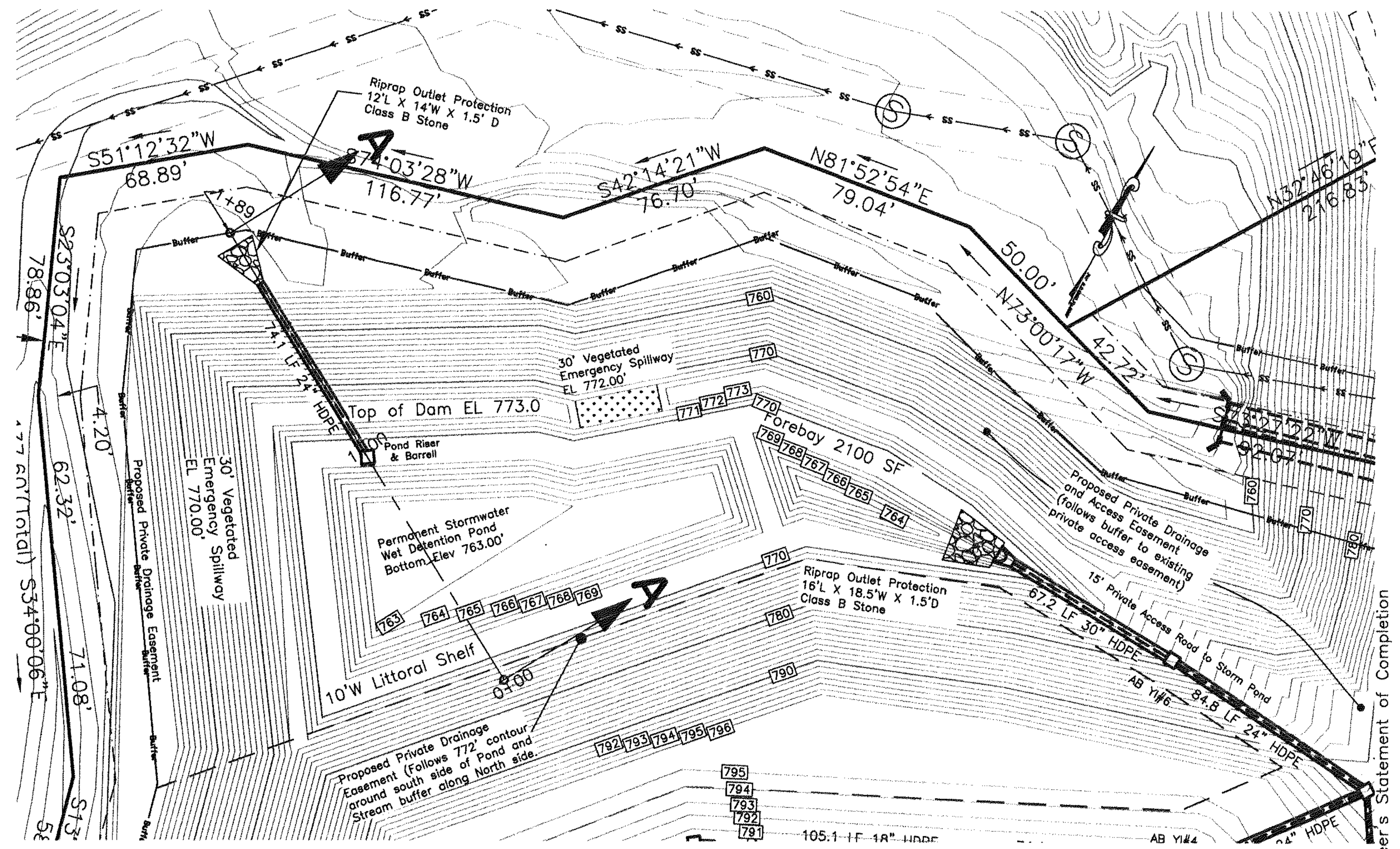

Engineer's Statement of Completion

I, John E. Beeson, P.E., a Professional Engineer, duly registered in the State of North Carolina, hereby state, based upon periodic inspections, that to the best of my knowledge, information, and belief, all public and private infrastructure shown on this plan have been installed in general conformance with the approved plans.

Signature: ____
Registration Number: 4898
Date: ____

DRAINAGE SWALE CROSS SECTION A-A

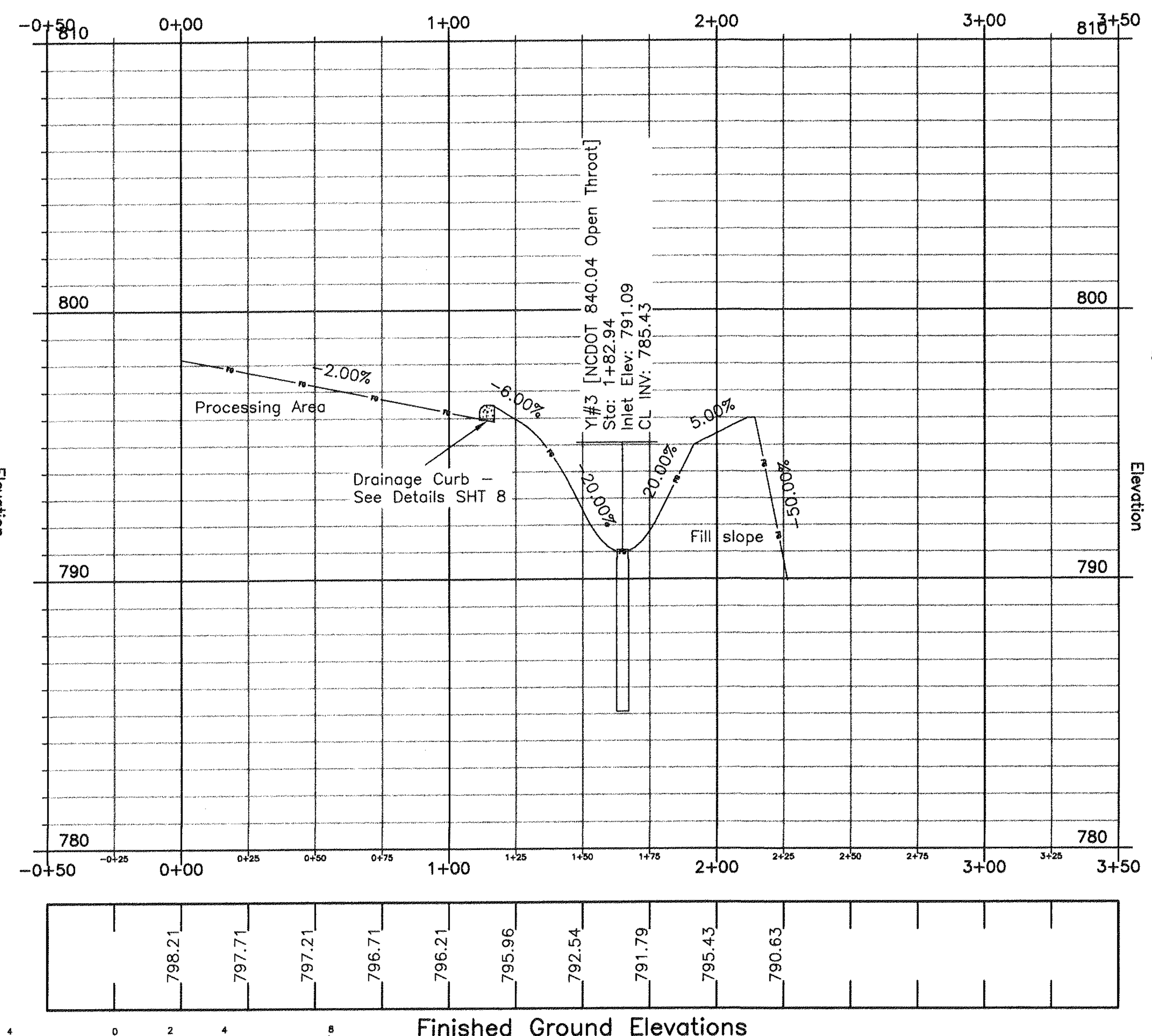

Vertical Scale: 1" = 4'

Horizontal Scale: 1" = 40'

SWALE CROSS SECTION B-B

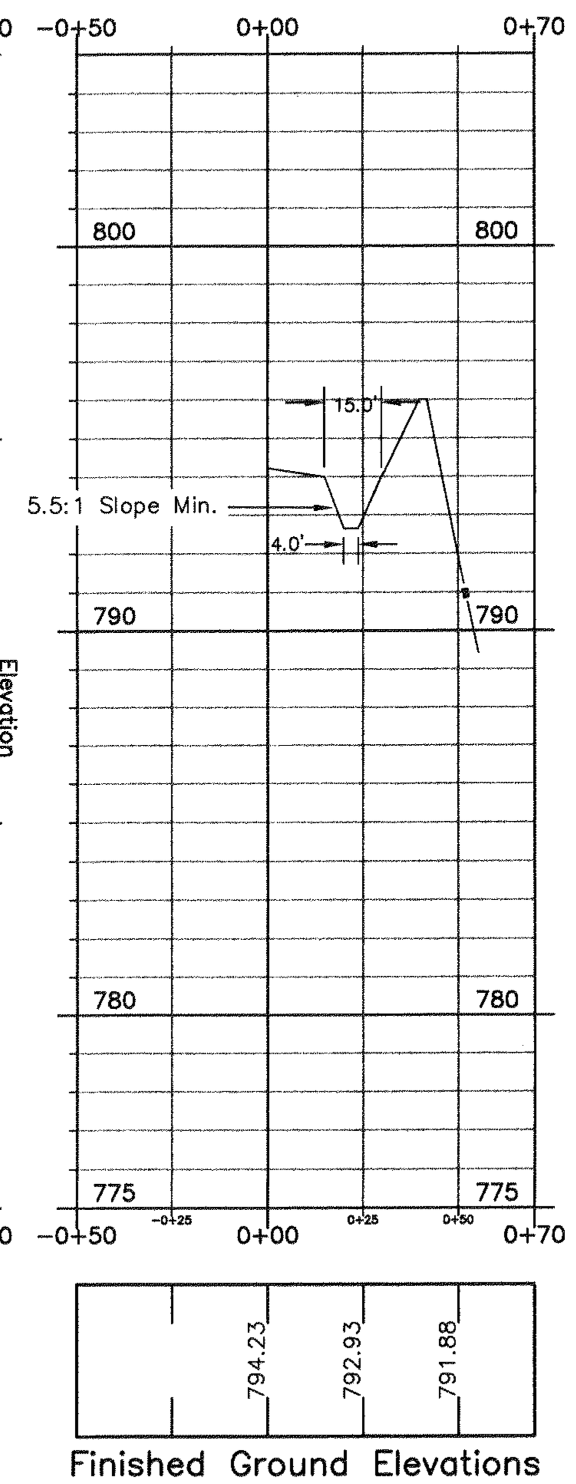

WET POND CROSS SECTION AT OUTLET A-A

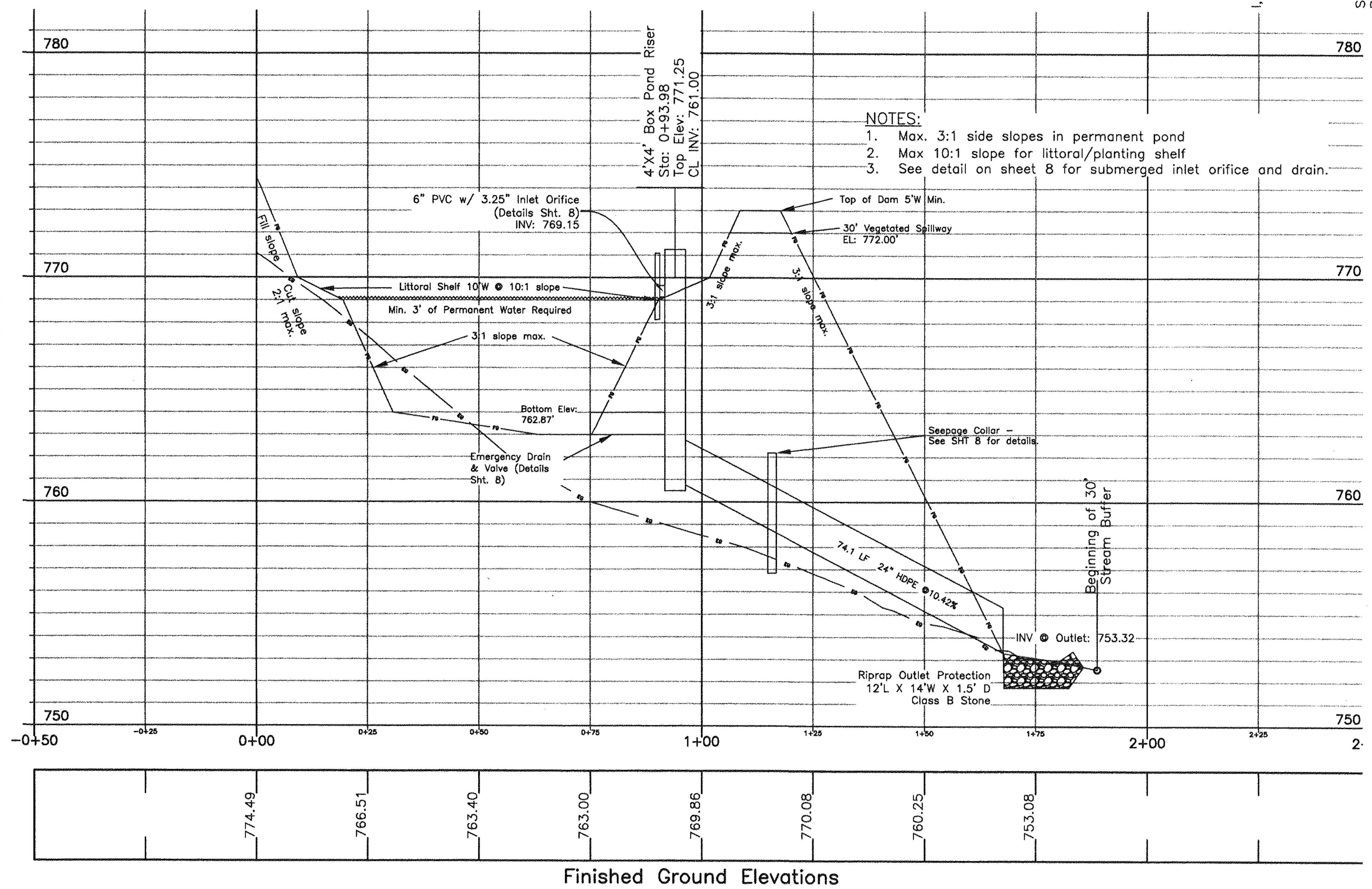

NOTES:
1. Max. 3:1 side slopes in permanent pond
2. Max 10:1 slope for littoral/planting shelf
3. See detail on sheet 8 for submerged inlet orifice and drain.

Vertical Scale: 1" = 8'

Horizontal Scale: 1" = 20'

WET DETENTION POND DATA

ELEVATIONS

Top of Dam:	773.00'
Emergency Spillway:	772.00'
Top of Riser:	771.25'
Quality Control Inlet:	769.15'
Q1:24hr:	770.26'
Q2:	770.16'
Q10:	770.01'
Q25:	770.29'
Q50:	770.42'
Q100:	770.48'
24" Barrel Outlet	761.00'

ORIFICES

Wqv Control Inlet:	3.25" circular @ 769.15'
Volume Control #1:	0.5' rectangular @ 770.20'
Drain	12" circular @ 762.87'

AREAS

Forebay	2100 sqft.
Permanent Pool	10500 sqft.
Forebay % to Perm.	20%

STAGE–STORAGE:

Elev	Area SqFt.	CuFt TTL Storage
763.00	1,880	0
764.00	4,140	2,936
766.00	6,410	5,897
768.00	8,632	21,639
769.00	9,867	30,880
770.00	15,923	43,654
772.00	18,724	79,260

STORMWATER MANAGEMENT PLAN – STORM SEWER

BEESON ENGINEERING INC.
ENGINEERS SURVEYORS PLANNERS
503 HIGH STREET
WINSTON-SALEM, NC 27101
TELEPHONE: (336)748-0071
FAX NUMBER: (336)748-0470
www.beesonengineering.com
acarter@beesonengineering.com

FIELD WORK BY:	CHECKED BY:	DRAWN BY:
PJ,DH	JEB	ATC

Horizontal Scale 1" = 40' Vertical Scale: 1" = 4'	SHEET NUMBER: 6 of 8
DATE: 7/1/2009	JOB NUMBER: 08100.051

NORTH CAROLINA Professional SEAL 4898 Engineer JOHN EDWARD BEESON

CORP# C-1144

Overdale Recycling Plant

Owner/Developer:	ABBEY GREEN INC. 4400 Silas Creek Pkwy, Suite 301 Winston-Salem, NC 27104 (336) 784-1890 bryanlj@mgway.com
PIN NUMBER: 6833-52-1826.00 6833-42-9505.00 6833-52-3269.00 6833-53-3586.00	PARCEL BLOCK / LOT: 2711 007W 2711 007T 2707 042A 2711 007U
TOWNSHIP: Winston	CITY: Winston-Salem
COUNTY: Forsyth	STATE: North Carolina

REV.#	DATE	DESCRIPTION
1	7.1.09	Update and revise plans
2	8.12.09	City Stormwater redlines
3	11.12.09	City Stormwater redlines and revised elevations
4	2.25.10	Revised elevations for Stormwater pond
5	4.5.10	Revised access road and drainage
6	5.3.10	Revised West fill slope and site layout
7	11.4.10	As-Builts

Project # 08100.051: OVERDALE RECYCLING PLANT, Sheet 6 of 8, Swale & Wet Pond, 8/12/2009; REV 5.3.10

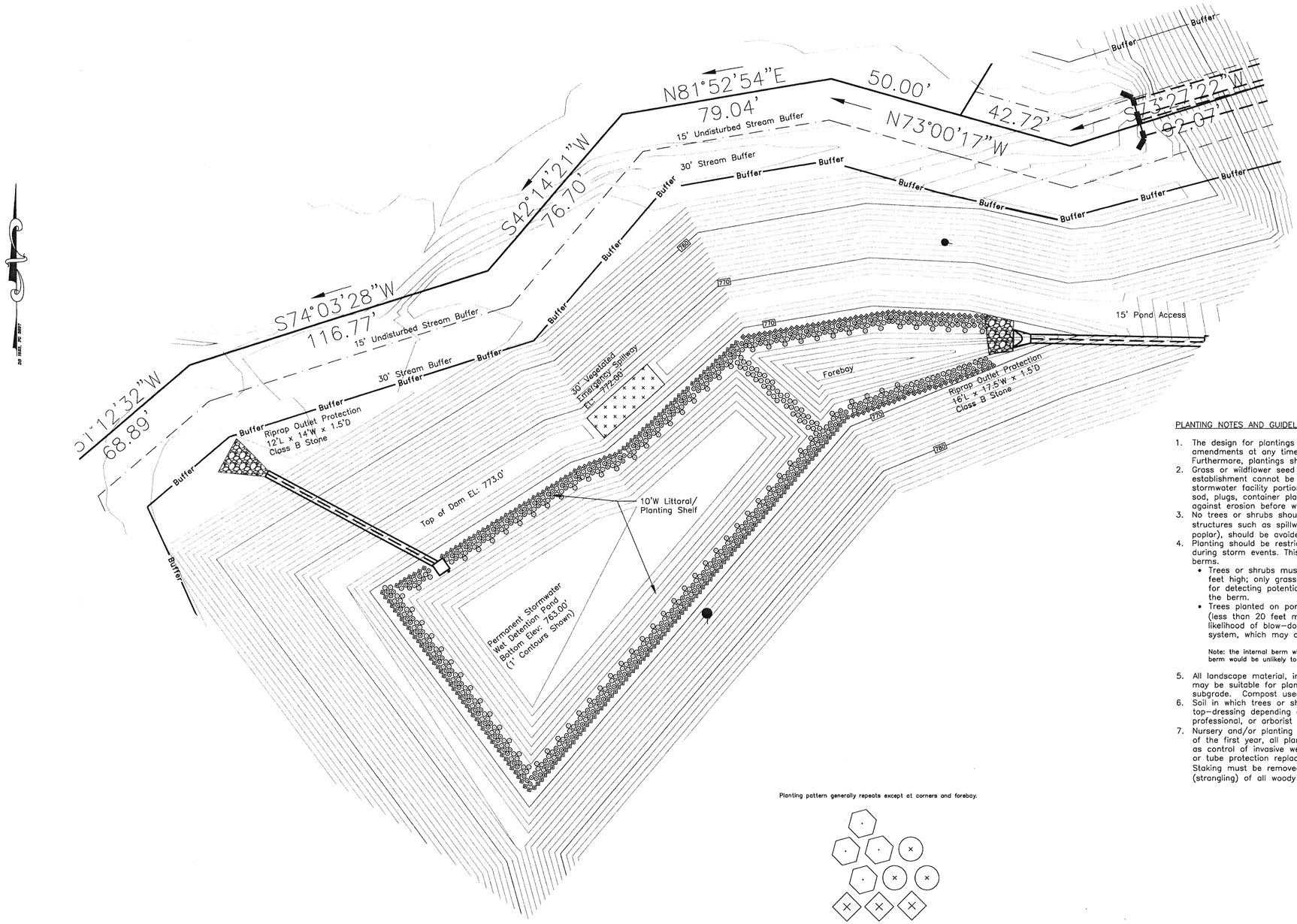

Engineer's Statement of Completion

I, John E. Beeson, P.E., a Professional Engineer, duly registered in the State of North Carolina, hereby state, based upon periodic inspections, that to the best of my knowledge, information, and belief, all public and private infrastructure shown on this plan have been installed in general conformance with the approved plans.

Signature: John E Beeson
Registration Number: 4898.
Date: 11-12-10

PLANTING NOTES AND GUIDELINES:

1. The design for plantings shall minimize the need for herbicides, fertilizers, pesticides, or soil amendments at any time before, during, and after construction and on a long-term basis. Furthermore, plantings shall be designed to minimize the need for mowing, pruning, and irrigation.
2. Grass or wildflower seed must be applied at the rates specified by the suppliers. If plant establishment cannot be achieved with seeding by the time of substantial completion of the stormwater facility portion of the project, then the contractor shall plant the area with wildflower sod, plugs, container plants, or other means to complete the specified plantings and protect against erosion before water is allowed to enter the stormwater BMP facility.
3. No trees or shrubs should be planted within 10 feet of inlet or outlet pipes, or manmade drainage structures such as spillways or flow spreaders. Species with roots that seek water (e.g., willow and poplar), should be avoided within 50 feet of pipes or manmade structures.
4. Planting should be restricted on berms that impound water either permanently or temporarily during storm events. This restriction does not apply to cut slopes that form pond banks, only to berms.
   - Trees or shrubs must not be planted on portions of water impounding berms taller than 4 feet high; only grasses may be planted. Grasses allow for unobstructed visibility of berm slopes for detecting potential dam safety problems such as animal burrows, slumping, or fractures in the berm.
   - Trees planted on portions of water-impounding berms less than 4 feet high must be small (less than 20 feet mature height) and have a fibrous root system. These trees reduce the likelihood of blow-down, or the possibility of channeling or piping water through the root system, which may contribute to dam failure on berms that retain water.

   Note: the internal berm within a wet pond is not subject to this planting restriction since the failure of an internal berm would be unlikely to create a safety issue.
5. All landscape material, including grass, should be planted in good topsoil. Native underlying soils may be suitable for planting if amended with 4 inches of well-aged compost tilled into the subgrade. Compost used should meet specifications for Grade A compost quality.
6. Soil in which trees or shrubs are planted may need additional enrichment or additional compost top-dressing depending on the results of the soil analysis. Consult a nurseryman, landscape professional, or arborist for site-specific recommendations.
7. Nursery and/or planting professional shall provide a one year warranty for plantings. At the end of the first year, all plants that do not survive must be replaced. Establishment procedures, such as control of invasive weeds, animal and vandal damage, mulching, re-staking, watering, and mesh or tube protection replacement, shall be implemented to the extent needed to ensure plant urvival. Staking must be removed after establishment (approximately 12 months), to prevent girdling (strangling) of all woody plants.

Planting pattern generally repeats except at corners and foreboy.

PLANTING SCHEDULE

LEGEND	KEY	QTY	BOTANICAL NAME	COMMON NAME	PLANT SIZE / CONTAINER	REMARKS	HEIGHT / SPREAD
×	CARC	283	Carex crinita	Fringed Sedge	8" H	Tall grass sedge	2'
					Plug	Droopy seedheads	2'
·	CARL	405	Carex lurida	Lurid Sedge	8" H	Grass-like sedge	1'
					Plug	Spiny seedheads	1'
◇	JUNE	286	Juncus effusus	Common Rush	8" H	Tall rush	3-4'
					Plug	Stiff stems	1-2'

APPLICANT MAY SUBSTITUTE PLANT VARIETY WITH STORMWATER INSPECTOR APPROVAL ON ANY OF THE ABOVE REFERENCE PLANT MATERIAL.

STORMWATER MANAGEMENT PLAN - WET POND PLANTING PLAN

FIELD WORK BY: PLDH | CHECKED BY: JEB | DRAWN BY: ATC | SHEET NUMBER: 7 of 8

Scale 1" = 20' | DATE: 7/1/2009 | JOB NUMBER: 08100.051

BEESON ENGINEERING INC.
ENGINEERS SURVEYORS PLANNERS
503 HIGH STREET
WINSTON-SALEM, NC 27101
TELEPHONE: (336)748-0071
FAX NUMBER: (336)748-0470
http://www.beesonengineering.com
acarter@beesonengineering.com

NORTH CAROLINA Professional SEAL 4898 Engineer JOHN EDWARD BEESON

CORP# C-1144

Overdale Recycling Plant

Owner/Developer: ABBEY GREEN, INC.
4400 Silas Creek Pkwy, Suite 301
Winston-Salem, NC 27104
(336) 784-1890

Property Description: Lot 1 Overdale Recycling Subdivision
PIN NUMBER: 6838-52-3655.00 | 2711 0078
6838-42-2655.00 | 2711 0077
6838-52-3655.00 | 2711 0077
BLOCK / LOT:
CITY: Winston-Salem
STATE: North Carolina
TOWNSHIP: Winston
COUNTY: Forsyth

REV'N	DATE	DESCRIPTION
1	7.1.09	Update and revise plans
2	8.12.09	Only Stormwater revisions
3	11.13.09	Only Stormwater revisions and elevations revised.
4	2.25.10	Revised elevations for Stormwater pond
5	4.6.10	Revised access road and drainage
6	5.3.10	Revised Pond, fill slope and rain legend
7	11.4.10	As-Builts

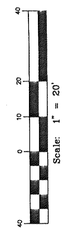

Project # 08100.051: OVERDALE RECYCLING PLANT, Sheet 7 of 8, Wet Pond Planting Plan, 8/12/2009; REV 5.3.10

SEDIMENT CURB AND GRAVEL VERGE OUTLET

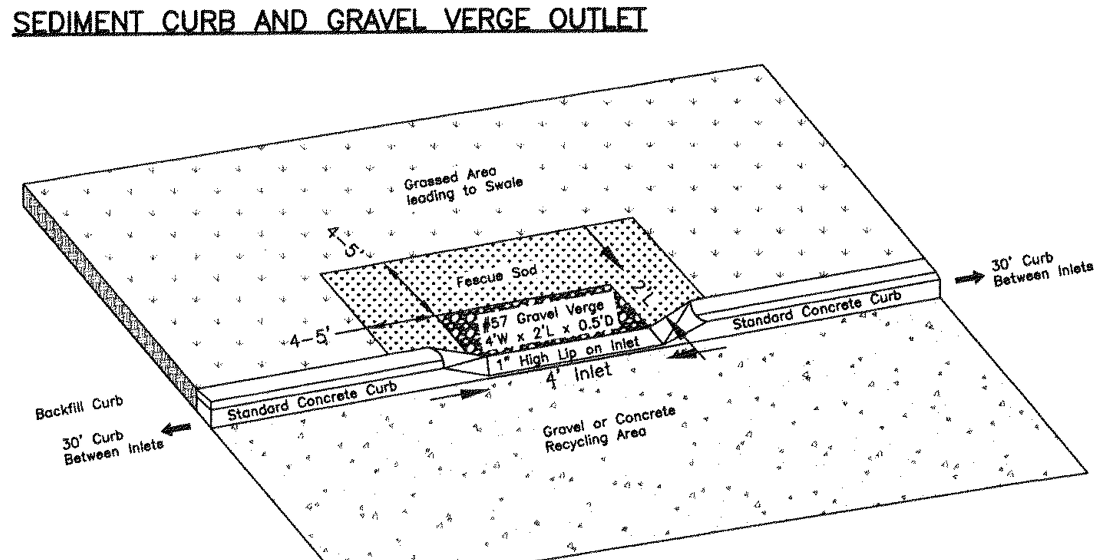

Construction Specifications:
1. Install curbline along concrete or gravel processing area. 4' inlet areas should be located every 30' of curb length.
2. Ensure inlet has a 1" lip to drop heavy sediments prior to water flowing into inlet.
3. install #57 gravel verge behind curb inlet to further collect fine sediments.
4. Sod area immediately behind and around gravel verge. Seed remaining area leading into drainage swales.

Maintenance:
Clean out sediments from curb line after rain events. Bi-annually refresh gravel verge to remove vegetation and loosen/replace gravel. Regularly mow grassed swale area to a minimum of 3".

SEEPAGE CONTROL – FILTER AND DRAINAGE DIAPHRAM

General Notes:
A filter diaphragm is a designed zone of filter material (usually well-graded, clean sand) constructed around a conduit. It has become a standard defensive design measure to prevent problems associated with seepage or internal erosion in earth fill surrounding the conduit. The use of a filter diaphragm is required around any conduit that extends through an embankment dam to the downstream slope. A drain system is required to collect the seepage at the bottom of the filter diaphragm and convey it to the downstream side of the embankment into a collection ditch or energy dissipater/stream channel.

Construction:
In dams constructed of fine-grained (clayey) soils commonly encountered in Winston Salem and surrounding areas, fine aggregate used in concrete (concrete sand) meeting ASTM C-33 typically meets the requirements for the filter diaphragm.

1. The alignment of the filter diaphragm is perpendicular to the longitudinal alignment of the conduit and located in the downstream section of the dam such that it is:
   - Downstream of the key trench (or cutoff trench)
   - Upstream of a point where the embankment cover (above the upstream face of the diaphragm to the downstream face of the dam) is at least one-half the difference in elevation between the top of the diaphragm and the maximum potential pond water level (see Figure 1).
2. The diaphragm shall extend horizontally and vertically into the adjacent embankment fill and foundation to intercept potential seepage/leakage through cracks, poorly compacted soil zones, or other discontinuities associated with the structure or its installation.
3. Extend the diaphragm horizontally 6' and vertically to the crest of the auxiliary (emergency) spillway.
4. The filter diaphragm should extend below the pipe to a depth of 2 feet or to bedrock formation, whichever is encountered first. If the foundation is softer extend the diaphragm vertically downword 1.5 times the outside diameter of the conduit or down to bedrock if encountered at shallower depth. Provide a minimum diaphragm thickness (in the direction of conduit length) of 3 feet. Use a larger thickness if needed for tying into the embankment or foundation drainage systems, accommodating construction methods, or other reasons. These dimensions are shown in Figures 2 and 3.
5. A drain system shall be provided of 4 to 6 inch slotted Schedule 40 or 80 PVC underdrain collector pipe and 4 to 6 inch solid-walled Schedule 40 or 80 PVC pipes connected near the two ends to convey the water to the downstream side of the dam.
6. If perforated PVC underdrain pipe (or slotted PVC underdrain pipe with slot width greater than 0.5 mm) is used in lieu of slotted PVC underdrain pipe with slot width 0.5 mm or less, gravel that is filter-compatible with the sand in the filter diaphragm should be used as a jacket around the perforated pipe. The gravel must also be specified to be compatible with the size of perforations or slots in the collector pipe. The criterion is that perforations or slots in the collector pipe should have a diameter or slot width that is smaller than the D50 size of the gravel or sand filter surrounding the pipe.
7. The granular material (typically concrete sand) in the filter diaphragm should be moderately compacted after thoroughly wetting (saturating) it, using any of the compaction methods suited to granular materials such as walk-behind vibratory rollers or manually operated plate compactors. The filter material should not be overly compacted because that can reduce the filter's ability to "self-heal" or adjust to any movements in the underlying embankment and foundation.

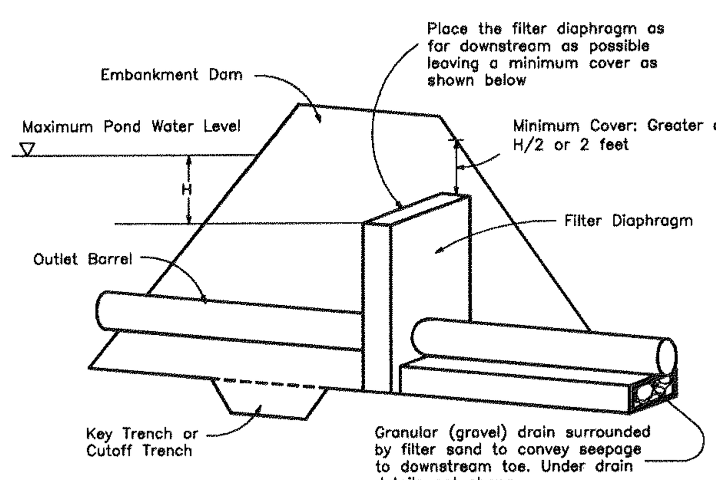

FIGURE 1: Typical configuration for a filter diaphragm. The fugue shows the location of the filter diaphragm as far downstream as possible leaving adequate cover over it.

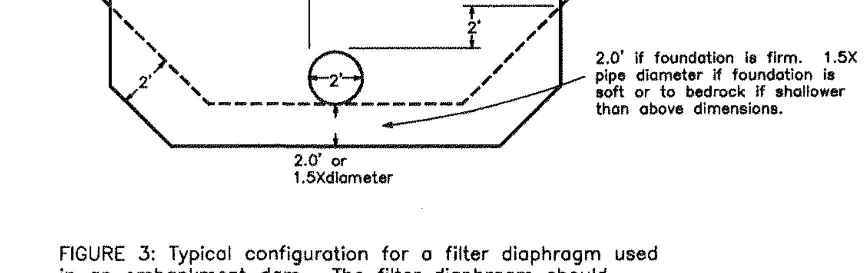

FIGURE 3: Typical configuration for a filter diaphragm used in an embankment dam. The filter diaphragm should extend into the foundation soils where an excavation is made for the outlet barrel.

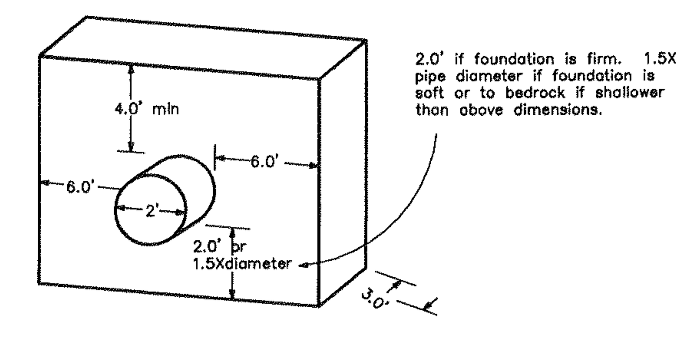

FIGURE 2: Typical configuration for a filter diaphragm used in an embankment dam.

TYPICAL RISER AND SUBMERGED INLET ORIFICE (N.T.S.)

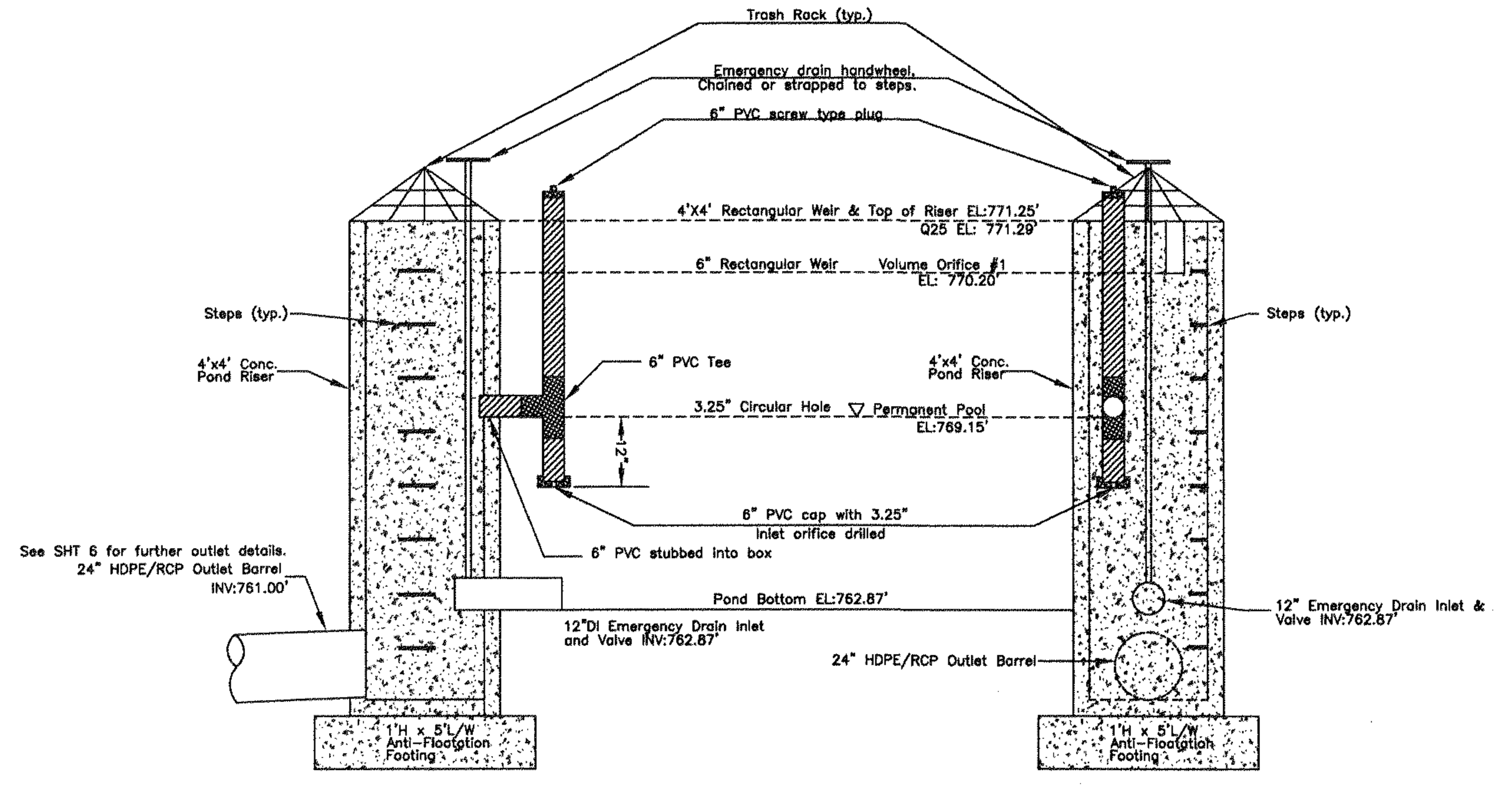

WET DENTENTION POND

General Notes:
The components of the wet detention pond that help increase the pond's pollutant removal efficiency are the permanent pool, temporary pool, and forebay. The permanent pool helps reduce particles that have settled to the pond bottom from re-suspending when runoff flows into the pond. The temporary pool is storage above the permanent pool that is designed to control the Water Quality Volume. To increase the detention time of the runoff, the temporary pool is slowly released through low flow orifice(s). A separate smaller pond, called a forebay, is placed upstream of the main pond to trap a majority of the coarser fractions of suspended solids in the runoff before it enters the main pond.

Construction:
1. The developer shall contact the City Stormwater Engineer when the best management practice(s) are constructed and about to become operational so an inspection to determine compliance with the approved plan can be performed.
2. Adequate drainage, erosion and sediment control measures, best management practice(s) and/or other stormwater management facilities shall be provided and maintained at all times during construction. Damages to adjacent property and/or the construction site caused by the contractor's or property owner's failure to provide and maintain adequate drainage and erosion/sediment control for the construction area shall be the responsibility of the property owner and/or contractor.
3. Existing erosion control sediment trap will need to be released by City of WS Erosion Control Inspector prior to any excavating, fine grading or installation of permanent Stormwater Wet Detention Pond. All existing sediment will be removed from finished pond area prior to planting and filling of permanent pond level.
4. For earth dams, the top width of the dam shall be 5 feet minimum.
5. An additional five percent (5%) of the design height of an earthen embankment dam shall be added to the top of dam elevation during fill placement to negate future settlement.
6. A key trench shall be excavated under the entire length of the dam and located at or upstream of the centerline of the dam. The key trench should be filled with highly impervious and well compacted clay material. The key trench should have a bottom width adequate to accommodate the equipment used for excavation, backfill, and compaction operations, with a minimum width of 4 feet. Side slopes should be no steeper than one horizontal to one vertical. The minimum recommended depth of fill material is 3 feet below the stripped grade (or shallower should bedrock be encountered). The fill material should be placed in lifts not to exceed 8 inches in loose thickness and compacted to at least 95% standard proctor. Incorporating a drainage blanket (preferably with a chimney drain) should be considered to reduce the potential for seepage problems.
7. A minimum of 3' of permanent pond level is required. A clay liner, clay/bentonite combination or other suitable geomembrane may be used to line the pond in order to maintain the permanent pond.
8. Install riprap energy dissipation to prevent erosive velocities. The basin discharge shall be evenly distributed across a minimum 30 feet long vegetated filter strip. Every effort should be made to discharge in defined conveyances and parallel to the existing flow to prevent bank erosion.
9. Downstream channels may need to be modified and lined with rip rap to prevent erosion of the channel. Modifications to the downstream channel should be minimized as much as possible to prevent excessive disturbance in the channel.
10. A pond drain is to be provided to drain the pond for routine maintenance or structural repairs in an emergency situation. The pond drain is to have the discharge capability to completely drain the pond in 24 hours, in the event of an emergency posed by impending failure of the pond dam.
11. See sheet detail on right for further information on draining last foot of water for maintenance or emergency drainage.

Wet Detention Pond Maintenance:

Routine Maintenance
Routine maintenance shall include minor upkeep such as mowing; trash and debris removal; minor slope repair and stabilization; periodic structural inspections of the valves, gates, dam, etc.; and tree and brush removal from the dam, spillway, inlet(s), and outlet. These maintenance items may be performed by the owner without review of a Professional Engineer.

Non-Routine Maintenance
Non-routine maintenance shall include such items as sediment clean-out (dredging); channel stabilization; and problems regarding the principal spillway conduits, emergency spillway, dam failure, and seepage. These items require a Registered Professional Engineer to prepare a plan and/or details and to certify completion of the maintenance. All revisions and repairs to permanent runoff control structures shall be done in accordance with City of Winston Salem guidelines and specifications.

Maintenance Schedule: estimated schedule – certain ponds may require more or less frequent attention.

I. Monthly, or after every runoff-producing rainfall event.
   a. Remove trash and debris from the trash rack.
   b. Check and clear the orifice of any obstructions.
   c. Check the pond side slopes for erosion and remove trash from around the pond.
   d. Inspect principal and emergency spillways for blockage.

II. Quarterly, or after major storm events (more than 2 inches of rain).
   a. Inspect the collection system (e.g. catch basins, piping, grassed swales) for proper functioning. Clear accumulated trash from basin grates and basin bottoms, and check piping for obstructions.
   b. Check pond inlet pipes for undercutting, replace rip-rap that is choked with sediment, and repair broken pipes.
   c. Check the operation of the gate valve. All valves should be operated from the fully closed to the fully open position.
   d. Remove woody vegetation (trees and brush) from dam embankment surfaces and spillway(s).

III. Semi-Annually
   a. Remove accumulated sediment from the bottom of the outlet structure.
   b. Check for presence of rip-rap at inlet pipes and replace if necessary.
   c. Check pond depth at various points in the pond. If mean depth is reduced to 75 % of the original design depth, sediment will be removed to at least the original design depth.
   d. Check riser and barrel for improper alignment, elongation and displacement of joints, cracks, leaks, loss of protective coating, corrosion, and blockage – repair as necessary.

IV. General
   a. Mow side slopes according to the season. Maximum grass height should be nine (9) inches.
   b. Riparian and aquatic vegetation (willows, alders, cattails, etc.) are encouraged along the perimeter of the pond at the water's edge. However, the dam, emergency spillway, inlet(s), and water control structure should be kept clear of all woody vegetation.
   c. In case the ownership of the pond should change, the current owner should, within thirty (30) days of transfer of ownership, notify the City of Winston Salem Stormwater Management of such ownership transfer.
   d. Excessive plant growth, algae blooms, odors, discoloration, perceived animal pests, etc. should be addressed on an as-needed basis. Solutions to these problems should be non-chemical and deemed safe to our drinking water supply.

Annual Maintenance Inspection and Report
The person responsible for maintenance of any Structural BMP installed pursuant to this Ordinance shall submit to the Stormwater Director an inspection report from a qualified registered North Carolina professional engineer, surveyor, or landscape architect performing services only in their area of competence. The inspection report shall contain all of the following:
1. The name and address of the Owner;
2. The recorded book and page number of the lot of each Structural BMP;
3. A statement that an inspection was made of all Structural BMPs;
4. The date the inspection was made;
5. A statement that all inspected Structural BMPs are performing properly and are in compliance with the terms and conditions of the approved maintenance agreement required by this Ordinance; and
6. The original signature and seal of the engineer, surveyor, or landscape architect.

All inspection reports shall be on forms supplied by the Stormwater Director. An original inspection report shall be provided to the Stormwater Director beginning one year from the date of as-built certification and each year thereafter on or before the date of the as-built certification.

GRASSED SWALE

Construction:
1. To maximize the infiltration capacity of the swale, compaction of the soil underlying the swale should be avoided. For example, equipment for excavating or grading should operate from the side of the swale instead of the bottom of the swale.
2. Before vegetation is established in a swale, the swale is particularly vulnerable to scour and erosion. Therefore, protecting the seedbed with a temporary erosion-resistant lining, such as a geosynthetic, fiberglass roving, or other suitable erosion controls is generally necessary.
3. Swales should be constructed and vegetated early in the construction schedule, preferably before area grading and paving increase the rate of runoff.

Maintenance:
Maintenance of grassed swales involves grooming the vegetation and occasionally removing trash. If native vegetation is used instead of turf, vegetation has to be mowed only seasonally to retard the growth of woody vegetation. Routine mowing is required if turf grasses are used. The recommendation is that grass be cut no lower than 5 inches. In addition, the grass should be allowed to grow to the maximum height consistent with the species and aesthetic requirements. Swales populated with wetland vegetation or other low-maintenance ground cover do not require mowing of the channel. The frequency of trash removal depends on the location and attractiveness of the swale as a disposal site.

Excessive sediment should not accumulate if erosion is controlled adequately upstream. However, if excessive siltation occurs, the sediment must be removed periodically (no less than once annually). Sediment that accumulates in the swale may be prone to resuspension during large storm events and can kill the grass. Sediment should be removed when it reaches a depth of 4 inches or when it covers the grass.

Additional annual maintenance activities are as follows:
- Repair erosion and regrade the swale to ensure that runoff flows evenly in a thin sheet through the swale.
- Revegetate the swale as needed to maintain a dense growth.

Inspection and Maintenance Provisions:
Important maintenance procedures:
- The pre-treatment drainage curbing leding to the grassed swale will be managed to reduce the sediment load to the grassed swale.
- After the first-time fertilization to establish the grass in the swale, fertilizer will not be applied to the grassed swale.

The grassed swale will be inspected once a quarter. Records of inspection and maintenance will be kept in a known set location and will be available upon request.

Inspection activities shall be performed as follows. Any problems that are found shall be repaired immediately.

PERMANENT DIVERSION BERM

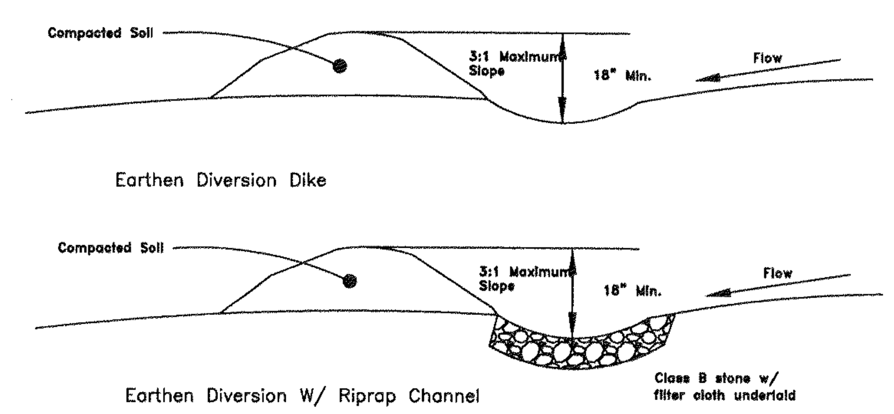

Construction Specifications:
1. Remove and dispose of all tress, brush, stumps and other objectionable material.
2. Ensure that the minimum constructed cross-section meets all design requirements.
3. Ensure that the top of the dike is not lower at any point than the design elevation plus the specified settlement.
4. Provide sufficient room around diversion to permit machine regrading and cleanout.
5. Vegetate the ridge immediately after construction.

Maintenance:
Inspect temporary diversions once a week and after every significant rainfall. Immediately remove sediment from flow area and repair the diversion ridge as needed. Carefully inspect outlets and make timely repairs as needed.

TRASH RACK FOR RISER (N.T.S.)

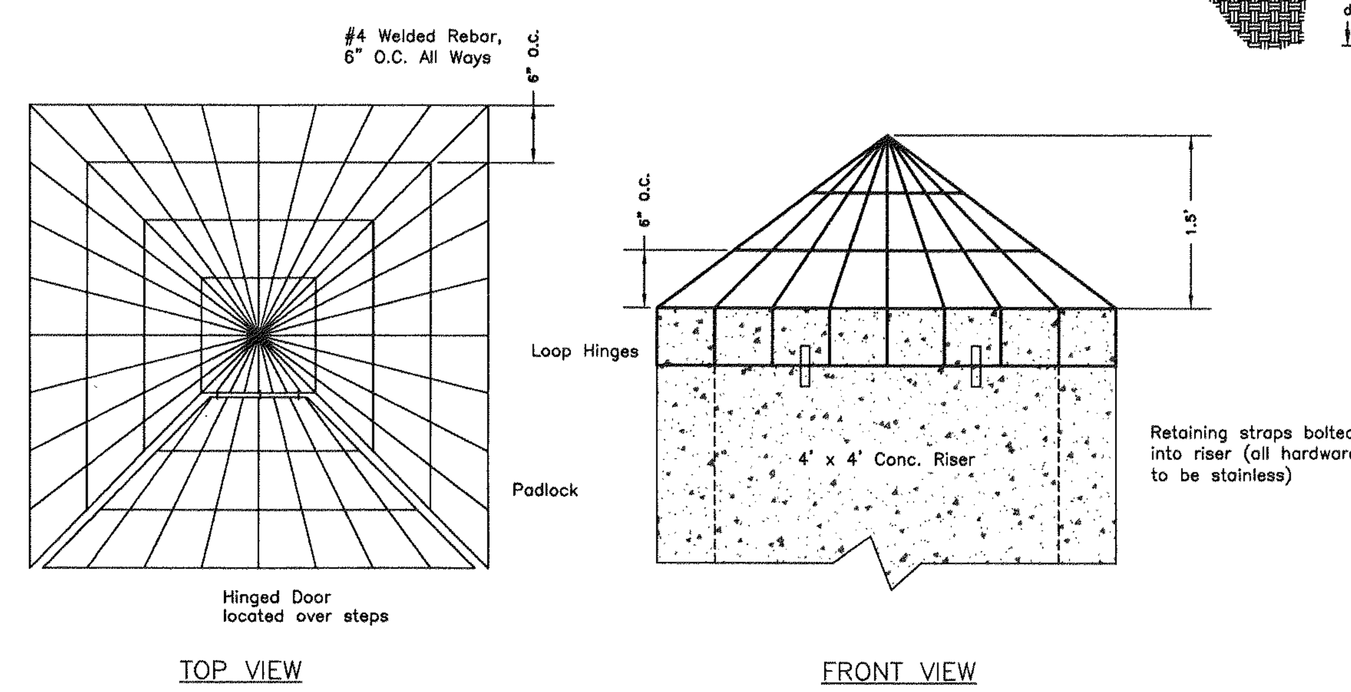

NO.	DATE	DESCRIPTION	BY
7	11.4.10	As-Builts	ATC
6	5.3.10	Revised West fill slope and site layout	ATC
5	4.5.10	Revised access road and drainage	ATC
4	2.25.10	Revised elevations for Stormwater pond	ATC
3	11.12.09	City Stormwater redlines and revised details	ATC
2	8.12.09	City Stormwater redlines	ATC
1	7.1.09	Update and revise plans	ATC

ROCK CHECK DAMS

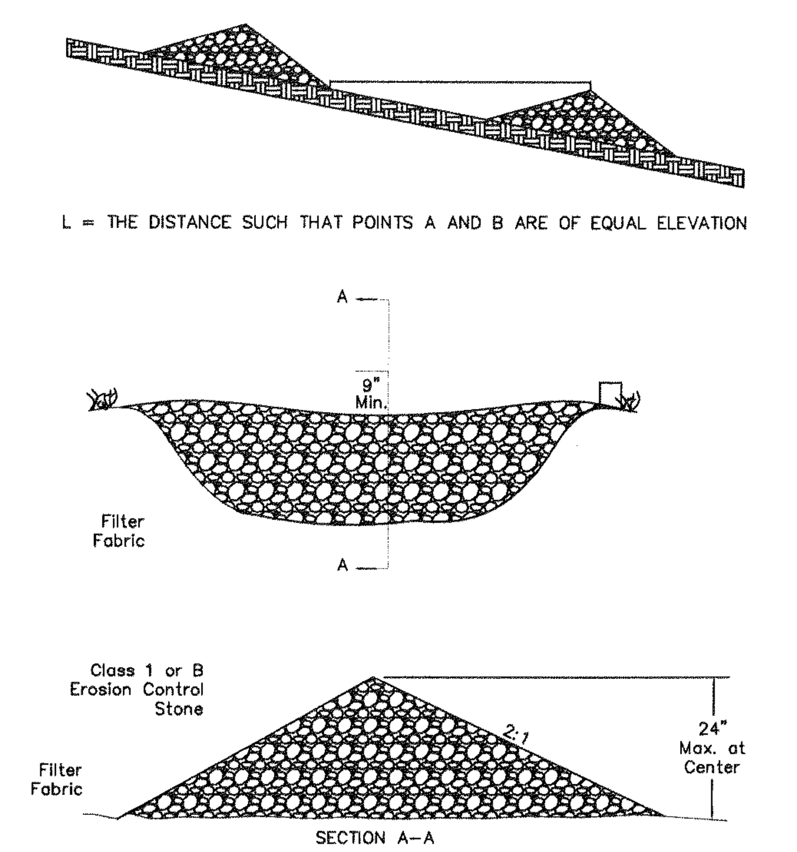

Construction
1. Place stone to the lines and dimensions shown in the plan on a filter fabric foundation.
2. Keep the center stone section at least 9 inches below natural ground level where the dam abuts the channel banks.
3. Extend stone at least 1.5 ft. beyond the ditch banks to keep overflow water from undercutting the dam as it re-enters the channel.
4. Set spacing between dams to assure that the elevation at the top of the lower dam is the same elevation as the toe elevation of the upper dam.
5. Protect the channel downstream from the lowest check dam, considering that the water will flow over and around the dam.
6. Make sure the channel reach above the most upstream dam is stable.
7. Ensure that channel appurtenances, such as culvert entrances below check dams, are not subject to damage or blockage from displaced stones.

Maintenance
Inspect check dams and channels for damage after runoff event.

Anticipate submergence and deposition above the check dam and erosion from high flows around the edges of the dam. Correct all damage immediately. If significant erosion occurs between dams, install a protective riprap liner in that portion of the channel.

Remove sediment accumulated behind the dams as needed to prevent damage to vegetation. Allow the channel to drain through the stone check dam and prevent large flows from carrying sediment over the dam. Add stones to dam as needed to maintain design height and cross section.

OUTLET PROTECTION – PIPE OUTLET TO FLAT AREA

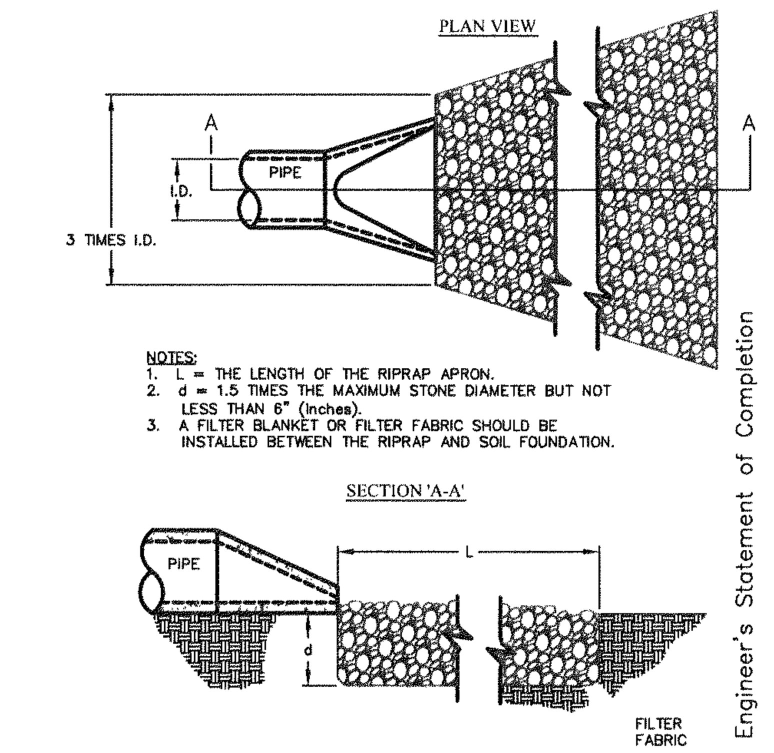

NOTES:
1. L = THE LENGTH OF THE RIPRAP APRON.
2. d = 1.5 TIMES THE MAXIMUM STONE DIAMETER BUT NOT LESS THAN 6" (inches).
3. A FILTER BLANKET OR FILTER FABRIC SHOULD BE INSTALLED BETWEEN THE RIPRAP AND SOIL FOUNDATION.

Engineer's Statement of Completion

I, John E. Beeson, P.E., a Professional Engineer, duly registered in the State of North Carolina, hereby state, based upon periodic inspections, that to the best of my knowledge, information, and belief, all public and private infrastructure shown on this plan have been installed in general conformance with the approved plans.

Signature:
Registration Number: 4898
Date: 11-12-10

CORP# C-1144

Stormwater Details
Overdale Recycling Plant

ABBEY GREEN INC.
4400 Silas Creek Pkwy, Suite 301
Winston-Salem, NC 27104
(336) 784-1890
bryanlj@myway.com

NOT TO SCALE

FIELD WORK BY		CHECKED BY:
Others		JEB
Block / Lot: 2711 007W, 2711 007T, 2707 042A, 2711 007U	PIN: 6833-52-1826.00, 6833-42-9505.00, 6833-52-3269.00, 6833-53-3585.00	Deed Book/Page: DB 2175 PG 3070, DB 2576 PG 2117, DB 2267 PG 2420, DB 2576 PG 2117
TAX MAP: 630830	CITY: Winston-Salem	COUNTY: Forsyth
STATE: North Carolina	DATE: 7-1-2009	SHEET NUMBER: 8 of 8
JOB NUMBER: 08100.051	DRAWN BY: ATC	

BEESON ENGINEERING INC.
ENGINEERS SURVEYORS PLANNERS
503 HIGH STREET
WINSTON-SALEM, NC 27101
TELEPHONE: (336) 748-0071
FAX: (336) 748-0470
www.beesonengineering.com