Permit No.	Date	Document ID No.
29-06	**July 13, 2011**	**14361**

Operations Manual

Davidson County Landfill Facility
Davidson County, North Carolina

Prepared for:
Davidson County Integrated Solid Waste Management
Thomasville, North Carolina

April 2011
Revised: July 2011

RICHARDSON SMITH GARDNER
& ASSOCIATES
ENGINEERING & GEOLOGICAL
SERVICES

14 N. BOYLAN AVENUE
RALEIGH, NORTH CAROLINA 27603
NC LIC. NO. C-0828 (ENGINEERING)

THIS PAGE INTENTIONALLY LEFT BLANK

DAVIDSON COUNTY
DAVIDSON COUNTY LANDFILL FACILITY

OPERATIONS MANUAL

TABLE OF CONTENTS

Page

1.0 GENERAL FACILITY OPERATIONS

1.1 Overview 1.0-1
1.2 Contact Information 1.0-1
1.2.1 Davidson County 1.0-1
1.2.2 North Carolina Department of Environment and Natural Resources 1.0-2
1.3 Facility Operating Hours 1.0-2
1.4 Access Control 1.0-2
1.4.1 Physical Restraints 1.0-3
1.4.2 Security 1.0-3
1.5 Signage 1.0-3
1.6 Communications 1.0-3
1.7 Fire Control 1.0-3
1.7.1 Open Burning 1.0-3
1.7.2 Fire Triangle 1.0-4
1.7.3 Equipment 1.0-4
1.7.4 General Fire Management Strategies 1.0-4
1.7.5 Fires Within Disposal Areas 1.0-4
1.7.6 Notification 1.0-5
1.7.7 Coordination With Local Fire Department 1.0-5
1.8 Severe Weather Conditions 1.0-5
1.8.1 Ice Storms 1.0-5
1.8.2 Heavy Rains 1.0-5
1.8.3 Electrical Storms 1.0-6
1.8.4 Windy Conditions 1.0-6
1.8.5 Violent Storms 1.0-6
1.9 Equipment Requirements 1.0-6
1.10 Personnel Requirements 1.0-6
1.11 Health and Safety 1.0-6
1.11.1 Personal Hygiene 1.0-7
1.11.2 Personal Protective Equipment 1.0-7
1.11.3 Mechanical Equipment Hazard Prevention 1.0-7
1.11.4 Employee Health and Safety 1.0-8
1.11.5 Physical Exposure 1.0-8
1.11.6 Material Safety Data Sheets 1.0-8
1.12 Utilities 1.0-8
1.13 Record Keeping Program 1.0-8

Table of Contents (Continued)

Page

2.0 WASTE HANDLING OPERATIONS

2.1 Overview 2.0-1
2.2 Acceptable Wastes 2.0-1
2.2.1 MSW Landfill Unit 2.0-1
2.2.2 C&D Landfill Unit 2.0-1
2.3 Prohibited Wastes 2.0-2
2.3.1 MSW Landfill Unit 2.0-2
2.3.2 C&D Landfill Unit 2.0-2
2.4 Waste Screening Programs 2.0-4
2.4.1 Waste Receiving and Inspection 2.0-4
2.4.2 Hazardous Waste Contingency Plan 2.0-5
2.5 Waste Disposal 2.0-5
2.5.1 Access 2.0-5
2.5.2 General Procedures 2.0-6
2.5.3 MSW Landfill Unit 2.0-7
2.5.3.1 Cell Operations and Phasing 2.0-7
2.5.3.2 Cell Activation 2.0-7
2.5.3.3 Placement of Initial Lift 2.0-7
2.5.3.4 Equipment Operations Within the Landfill 2.0-8
2.5.4 Special Waste Management 2.0-8
2.5.4.1 Asbestos Management (MSW or C&D Landfill Units) 2.0-8
2.5.4.2 Sewage Sludge Management (MSW Landfill Unit) 2.0-9
2.5.4.3 Spoiled Food and Animal Waste (MSW Landfill Unit) 2.0-9
2.5.5 Daily or Periodic Cover 2.0-9
2.5.5.1 MSW Landfill Unit 2.0-9
2.5.5.2 C&D Landfill Unit 2.0-10
2.5.6 Intermediate Cover 2.0-10
2.5.7 Height Monitoring 2.0-10
2.6 Deconstruction of Mobile Homes 2.0-10
2.7 Recycling Center Operations 2.0-10
2.8 Convenience Center Operations 2.0-10
2.9 Household Hazardous Waste Collection Facility Operations 2.0-11
2.10 Swap Shop Operations 2.0-11

3.0 ENVIRONMENTAL MANAGEMENT

3.1 Overview 3.0-1
3.2 Surface Water Control 3.0-1
3.2.1 Surface Water Run-On Control 3.0-1
3.2.2 Active Face Run-Off Control 3.0-1
3.2.3 Erosion Control 3.0-2
3.2.4 Sedimentation Control 3.0-2
3.2.5 Separation of Stormwater/Leachate - MSW Landfill Unit 3.0-2

Table of Contents (Continued)

Page

3.3 Leachate Management - MSW Landfill Units 3.0-3
3.3.1 Leachate Collection System (LCS) 3.0-3
3.3.1.1 Drainage Aggregate Maintenance 3.0-3
3.3.1.2 Collection Pipe Cleanout 3.0-4
3.3.1.3 Leachate Removal 3.0-4
3.3.1.4 Operation & Maintenance of Leachate Pumps & Storage Tanks 3.0-4
3.3.2 Leachate Quality Sampling 3.0-5
3.3.3 Record Keeping 3.0-5
3.3.4 Leachate Contingency Plan 3.0-5
3.3.5 Leachate Release Prevention Plan 3.0-5
3.4 Leachate Management - C&D Landfill Unit 3.0-6
3.5 Water Quality Monitoring 3.0-6
3.6 Landfill Gas (LFG) Management 3.0-6
3.6.1 MSW Landfill Units 3.0-6
3.6.2 C&D Landfill Unit 3.0-6
3.7 Landfill Gas (LFG) Monitoring Plan 3.0-7
3.7.1 Record Keeping 3.0-7
3.8 Vector Control 3.0-7
3.8.1 MSW Landfill Unit 3.0-7
3.8.2 C&D Landfill Unit 3.0-7
3.9 Litter Control 3.0-7
3.10 Odor Control 3.0-7
3.10.1 MSW Landfill Unit 3.0-7
3.10.2 C&D Landfill Unit 3.0-8
3.11 Dust Control 3.0-8
3.12 Air Quality 3.0-8
3.13 Leachate Seeps 3.0-8

FIGURES

Figure 1 Existing and Proposed Landfill Units and Solid Waste Management Activities

APPENDICES

Appendix A EPA Method 9095 - Paint Filter Liquids Test
Appendix B Waste Screening Form
Appendix C Leachate Recirculation Plan
Appendix D Mobile Home Deconstruction
Appendix E Household Hazardous Waste Plan
Appendix F Leachate Release Prevention Plan
Appendix G Operations Testing Memo

THIS PAGE INTENTIONALLY LEFT BLANK

SECTION 1.0
GENERAL FACILITY OPERATIONS

1.1 OVERVIEW

This Operations Manual was prepared for operations of the Davidson County Landfill facility (Permit No. 29-06) located near Lexington. This document discusses the operation of the following landfill units and other solid waste management activities:

- Lined Subtitle D MSW Landfill Units (Phase 1 (Closed); Phase 2 (Active));
- C&D Landfill (including mobile home deconstruction area);
- Recycling Center;
- Convenience Center (including white goods and tire handling areas);
- Household Hazardous Waste Collection Facility; and
- Swap Shop.

Refer to **Figure 1** for the location of existing and proposed landfill units and other solid waste management activities.

The information contained herein was prepared to provide landfill personnel with a clear understanding of how the Design Engineer assumed that the completed facility would be operated. While deviations from the operations outlined here may be acceptable, they should be reviewed and approved by the Design Engineer. Please refer to the appropriate permit application for a detailed discussion and calculations for the individual components of each landfill unit, including phasing plans.

1.2 CONTACT INFORMATION

All correspondence and questions concerning the operation of the Davidson County Landfill should be directed to the appropriate County and State personnel listed below. For fire or police emergencies dial 911.

1.2.1 <u>Davidson County</u>

Davidson County Integrated Solid Waste Management Department
220 Davidson County Landfill Road
Lexington, NC 27292
Phone: (336) 242-2284
Fax: (336) 249-7524

County Solid Waste Director: Charles Brushwood

1.2.2 North Carolina Department of Environment and Natural Resources

North Carolina DENR - Raleigh Central Office (RCO)
401 Oberlin Road, Suite 150
Raleigh, NC 27605
Phone: (919) 508-8400
Fax: (919) 715-3605

North Carolina DENR - Asheville Regional Office (ARO)
2090 US Highway 70
Asheville, NC 28778
Phone: (828) 296-4500
Fax: (828) 299-7043

North Carolina DENR - Winston-Salem Regional Office (WSRO)
585 Waughtown Street
Winston-Salem, NC 27107
Phone: (336) 771-5000
Fax: (336) 771-4630

Division of Waste Management (DWM) - Solid Waste Section:

Field Operations Branch Head:	Mark Poindexter (RCO)
Western District Supervisor:	Deborah Aja (ARO)
Waste Management Specialist:	Hugh Jernigan (WSRO)

Division of Land Resources - Land Quality Section:

Regional Engineer:	Matthew Gantt, P.E. (WSRO)

1.3 FACILITY OPERATING HOURS

Normal hours of operation will be 7:30 A.M. to 5:00 P.M. Monday to Friday and 7:00 A.M. to 12:00 noon on Saturday. The facility will be closed on Sunday.

The County may elect to modify these hours from time to time.

1.4 ACCESS CONTROL

Limiting access to the landfill facility is important for the following reasons:

- Unauthorized and illegal dumping of waste materials is prevented.
- Trespassing, and injury resulting therefrom, is discouraged.
- The risk of vandalism is greatly reduced.

Access to active areas of the landfill will be controlled by a combination of fences and natural

barriers, and strictly enforced operating hours. A landfill attendant will be on duty at all times when the facility is open for public use to enforce access restrictions (see also **Section 1.3**).

1.4.1 Physical Restraints

The site will be accessed by the existing entrances on Davidson County Landfill Road and Lower Lake Road (C&DLF unit, convenience center, etc.) and the entrance off of Old Highway 29 (Phase 2 MSWLF unit). Scales and a scale house are provided at each entrance. All waste will have been weighed prior to being placed in the landfill. Each entrance will have a gate which will be securely locked during non-operating hours.

1.4.2 Security

Frequent inspections of gates and fences will be performed by landfill personnel. The County will arrange for a random security patrol of the main gate to further discourage trespassing. Evidence of trespassing, vandalism, or illegal operation will be reported to the County Solid Waste Director.

1.5 SIGNAGE

A prominent sign(s) containing the information required by the DWM will be placed at the approach to each scale house. This sign(s) will provide information on operating hours, operating procedures, and acceptable wastes. Additional signage will be provided as necessary within the landfill complex to distinctly distinguish the roadway to the active landfill unit(s). Service and maintenance roads for use by operations personnel will be clearly marked and barriers (e.g., traffic cones, barrels, etc.) will be provided as required.

1.6 COMMUNICATIONS

Two way radio communication will be maintained between the active landfill unit(s) and the landfill scale house(s) and office. The scale house and office have telephones in case of emergency and for the conduct of day-to-day business. Emergency telephone numbers are displayed in the scale house(s) and office.

1.7 FIRE CONTROL

The possibility of fire within the landfill or a piece of equipment must be anticipated in the daily operation of the landfill. Potential fire hazards include both surface conditions and subsurface conditions. Surface conditions include equipment operations and newly placed waste. Subsurface conditions include existing waste previously landfilled.

1.7.1 Open Burning

With the exception of the controlled burning of land clearing debris generated on-site or from emergency clean-up operations, no opening burning is allowed at the facility. Controlled burning will occur only if permitted or approval by the local Fire Marshall.

1.7.2 Fire Triangle

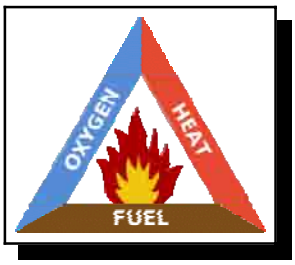

The "triangle" illustrates the rule that in order to ignite and burn, a fire requires three (3) elements: heat, fuel, and oxygen. A fire is prevented or extinguished by "removing" any one of them. A fire naturally occurs when the elements are combined in the right mixture (e.g., more heat needed for igniting some fuels, unless there is concentrated oxygen). These principles are integral in the prevention and management of potential fire situations.

1.7.3 Equipment

A combination of factory installed fire suppression systems and/or portable fire extinguishers will be operational on all pieces of heavy equipment at all times. Potential fire hazards are created from the build-up of fine, dry dust particles on and around operational motors and control panels. The presence of these build-ups can cause overheating and potential fire if periodic equipment cleaning and maintenance are not practiced. Portable fire extinguishers should be maintained in a state of readiness on each piece of moving equipment and equipment should be cleaned periodically.

1.7.4 General Fire Management Strategies

Each fire situation is site specific; however, general strategies for active fire management include the following (in no particular order):

- Accelerated high temperature combustion (displacing fuel);
- Covering of the landfill burn area with soil (reduce oxygen);
- Covering of the burn area with foams (reduce oxygen);
- Flooding the burn area with water (reduce heat);
- Injecting an inert gas such as CO_2 (reduce oxygen); and
- Excavating the burning material (displacing fuel) and then extinguishing it in small controlled areas.

1.7.5 Fires Within Disposal Areas

Fires within the landfill disposal areas will be limited by the use of daily/periodic cover as a fire break and control of "hot" loads entering the landfill. Landfill personnel at the scale house will turn away all trucks containing waste that is suspected to be hot. If a hot load is placed on the working face, then the load will be spread as thin as possible and daily cover soil will be immediately placed on the waste to extinguish the fire.

In general, fires that break out close to the surface of the disposal area should be excavated and smothered with cover material. Deep fires should be smothered out by placing moist soil on the surface and by constructing soil barriers around the fire. Where the smothering technique fails, the burning material must be excavated and smothered or

quenched with water once the burning material is brought to the surface. Water is usually not effective unless it can be directly applied to the burning material.

For the lined landfill unit(s), in the event a fire occurs in the first lift of waste immediately above the protective cover layer, the possibility of damage to geosynthetics and collection piping exists. Once the fire is extinguished, the residue must be removed to allow limited inspection of the geosynthetics and piping. Damaged sections of geosynthetics, piping, etc. must be removed and replaced with new items of the same or equal material. The new materials must be placed in accordance with the technical specifications and construction quality assurance (CQA) documents prepared for this facility.

1.7.6 Notification

The County will verbally notify the DWM (see **Section 1.2.2**) within 24 hours of discovery of a fire within any landfill disposal area. In addition, written documentation describing the fire, the actions carried out to extinguish the fire, and a strategy for preventing future occurrences will be provided to the DWM within 15 days following any such occurrence.

1.7.7 Coordination With Local Fire Department

A copy of this Operations Manual will be filed with the local fire department including all contact information for the facility.

1.8 SEVERE WEATHER CONDITIONS

Unusual weather conditions can directly affect the operation of the landfill facility. Some of these weather conditions and recommended operational responses are as follows.

1.8.1 Ice Storms

An ice storm can make access to the landfill dangerous, prevent movement or placement of daily cover, and, thus, may require closure of the landfill until the ice is removed or has melted.

1.8.2 Heavy Rains

Exposed soil surfaces can create a muddy situation in some portions of the landfill during rainy periods. The control of drainage and use of crushed stone on unpaved roads should provide all-weather access for the site and promote drainage away from critical areas. In areas where the aggregate surface is washed away or otherwise damaged, new aggregate should be used for repair.

Intense rains can affect newly constructed drainage structures such as swales, diversions, cover soils, and vegetation. After such a rain event, inspection by landfill personnel will

be initiated and corrective measures taken to repair any damage found before the next rainfall.

1.8.3 Electrical Storms

The open area of a landfill is susceptible to the hazards of an electrical storm. If necessary, landfilling activities will be temporarily suspended during such an event. Refuge will be taken as necessary in the on-site buildings or in rubber-tired vehicles.

1.8.4 Windy Conditions

Landfill operations during a particularly windy period may require that the working face be temporarily shifted to a more sheltered area. When this is done, the previously exposed face will be immediately covered with daily cover.

1.8.5 Violent Storms

In the event of hurricane, tornado, or severe winter storm warning issued by the National Weather Service, landfill operations may be temporarily suspended until the warning is lifted. Daily cover will be placed on exposed waste and buildings and equipment will be properly secured.

1.9 EQUIPMENT REQUIREMENTS

The County will maintain on-site equipment required to perform the necessary landfill activities. Periodic maintenance of all landfilling equipment, and minor and major repair work will be performed at designated maintenance zones outside of the landfill.

1.10 PERSONNEL REQUIREMENTS

At least one member of the landfill supervisory staff will be certified as a Manager of Landfill Operations (MOLO) by the Solid Waste Association of North America (SWANA). Each landfill employee will go through an annual training course (led by supervisory staff) and is certified by SWANA as Landfill Operations personnel. As part of this training, personnel learn to recognize loads which may contain prohibited wastes.

1.11 HEALTH AND SAFETY

All aspects of the landfill facility operations were developed with the health and safety of the operating staff, customers, and neighbors in mind. Prior to commencement of operations of the facility, a member of the operating staff will be designated site safety officer. This individual, together with the facility's management will modify the site safety and emergency response program to remain consistent with SWANA and Occupational Safety and Health Administration (OSHA) guidance.

Safety equipment provided includes equipment rollover protective cabs, seat belts, audible

reverse warning devices, hard hats, safety shoes, and first aid kits. Facility personnel will be encouraged to complete the American Red Cross Basic First Aid Course. Other safety requirements as designated by the County will also be implemented.

Facility employees will be routinely trained in health and safety by supervisory staff. All training will be documented. The following are some general recommendations for the health and safety of workers:

1.11.1 Personal Hygiene

The following items are recommended as a minimum of practice:

- Wash hands before eating, drinking, or smoking.
- Wear personal protective equipment as described in **Section 1.11.2.**
- Wash, disinfect, and bandage ANY cut, no matter how small it is. Any break in the skin can become a source of infection.
- Keep fingernails closely trimmed and clean (dirty nails can harbor pathogens).

1.11.2 Personal Protective Equipment

Personal Protective Equipment (PPE) must be evaluated as to the level of protection necessary for particular operating conditions and then made available to facility employees. The list below includes the PPE typically used and/or required in a solid waste management facility workplace.

- Safety shoes with steel toes.
- Noise reduction protection should be used in areas where extended exposure to continuous high decibel levels are expected.
- Disposable rubber latex or chemical resistant gloves for handling and/or sampling of waste materials.
- Dust filter masks.

Following use, PPE's should be disposed of or adequately cleaned, dried, or readied for reuse.

1.11.3 Mechanical Equipment Hazard Prevention

All equipment should be operated with care and caution. All safety equipment such as horns, backup alarms, and lights should be functional. A Lockout-Tagout program will be used to identify equipment in need or under repair and insure that operation is "off-limits" prior to maintenance or repair. All operators will be trained in the proper operation of equipment.

1.11.4 Employee Health and Safety

Some general safety rules are:

- Consider safety first when planning and conducting activities.
- Review the equipment O&M manual(s) prior to attempting repairs/changes.
- Remember the buddy system for repair of mechanical equipment.
- Post emergency contact phone numbers.
- Provide easy and visible access to the Right to Know materials.
- Provide easy and visible access to first aid kits and fire extinguishers.

1.11.5 Physical Exposure

Facility personnel may come in contact with the fluids, solids, and airborne constituents found at the facility. Routine training should be conducted regarding the individual and collective materials used at the facility and their associated hazards. Training concerning safe work practices around these potential exposures should cover the use of equipment and proper disposal procedures.

1.11.6 Material Safety Data Sheets

Material Safety Data Sheets (MSDS) will be collected on every waste (if available) that enters the facility. Information will also be made available for all chemicals stored on site for use at the facility. MSDS sheets will be stored in a location with all other Right to Know information for the site.

1.12 UTILITIES

Electrical power, water, telephone, and restrooms will be provided at the landfill scale house(s) and office.

1.13 RECORD KEEPING PROGRAM

The County will maintain the following records in an operating record at the landfill:

A. Current permit(s) (Permit to Construct, Permit to Operate, etc.);
B. Current operations manual/plan and engineering plan for each landfill unit;
C. Inspection reports;
D. Audit and compliance records;
E. Annual landfill reports;
F. Waste inspection records (see **Section 2.4**);
G. Daily tonnage records - including source of generation;
H. Waste determination records;
I. Quantity, location of disposal, generator, and special handling procedures for all special wastes disposed of at the site;
J. List of generators and haulers that have attempted to dispose of restricted wastes;

K. Employee training procedures and records of training completed;
L. All ground water monitoring and surface water quality information (See the current **Water Quality Monitoring Plan**) including:
   1. Monitoring well construction records;
   2. Sampling dates and results;
   3. Statistical analyses; and
   4. Results of inspections, repairs, etc.
M. LFG monitoring results and remedial measures as required (see the current **LFG Monitoring Plan**);
N. All closure and post-closure information, where applicable, including:
   1. Notification of intent to close;
   2. Testing;
   3. Certification; and
   4. Recording.
O. Cost estimates or financial assurance documentation;
P. A notation of the date and time of cover placement;
Q. Leachate records (see **Section 3.3.2**);
R. Weekly Leachate Storage Tank Area Inspection Records (see **Appendix F**);
S. Annual Leachate Release Prevention Training (see **Appendix F**);
T. Semi-annual Operations Training and Testing (see **Appendix G**);
U. Documentation of cell activation (see **Section 2.5.3.2**); and
V. Documentation of mobile home deconstruction (see **Appendix D**).

The operating record will be kept up to date by the Solid Waste Director or his designee. It will be presented upon request to the DWM for inspection. A copy of this Operations Manual will be kept at the landfill and will be available for use at all times.

THIS PAGE INTENTIONALLY LEFT BLANK

SECTION 2.0
WASTE HANDLING OPERATIONS

2.1 OVERVIEW

This section describes the required waste handling operations for the Davidson County Landfill facility. In addition to the MSW and C&D waste disposed of at this facility, the County also processes recyclables, scrap tires, white goods, and household hazardous wastes (HHW). These materials are stored at the landfill facility until there are sufficient quantities for pick up by various recycling contractors.

Note that clean wood waste is not handled at the landfill facility, but instead is directed to TODCO, Inc. a nearby private enterprise which accepts and processes wood waste for reuse as mulch.

2.2 ACCEPTABLE WASTES

2.2.1 MSW Landfill Unit

Only the waste as defined by NCGS 130A-290(a)(18a) generated within the approved service area may be disposed of in the MSW landfill unit. In addition, the special wastes described in **Section 2.5.4** may also be disposed of in the MSW landfill unit.

2.2.2 C&D Landfill Unit

Only the following wastes generated within the approved service area may be disposed of in the C&D landfill unit:

- Construction and Demolition (C&D) Solid Waste: as defined in 15A NCAC 13B.0532(8) means solid waste resulting solely from construction, remodeling, repair, or demolition operations on pavement and buildings or structures. C&D waste does not include municipal and industrial wastes that may be generated by the on-going operations at buildings or structures.
- Land Clearing and Inert Debris Landfill: as defined in 15A NCAC 13B.0101(54) means a facility for the disposal of land-clearing waste, concrete, brick, concrete block, uncontaminated soil, gravel and rock, untreated and unpainted wood, and yard trash.
- Land Clearing Waste: as defined in 15A NCAC 13B.0101(53) means solid waste which is generated solely from land-clearing activities, limited to stumps, trees, limbs, brush, grass, and other naturally occurring vegetative material.
- Asphalt: in accordance with NCGS 130A-294(m).
- Industrial solid waste that is generated by mobile or modular home manufacturers and asphalt shingle manufacturers in ABC County. The waste must be separated at the manufacturing site to exclude municipal solid waste, hazardous waste, and other waste prohibited from disposal in a Construction and Demolition Landfill.

- Other Wastes as Approved by the Solid Waste Section of the Division of Waste Management.

In addition, waste from the deconstruction of mobile homes described in **Section 2.6** and the special wastes (asbestos only) described in **Section 2.5.4** and may also be disposed of in the C&D landfill unit.

2.3 PROHIBITED WASTES

2.3.1 MSW Landfill Unit

The following wastes are prohibited from disposal within the MSW landfill unit:

- Whole Scrap Tires
- Used Oil
- White Goods
- Lead Acid Batteries
- Yard Waste
- Construction and Demolition Debris (C&D) (Except when allowed by the County)
- Aluminum Cans

In addition, operating criteria prohibit other materials from disposal within the MSW landfill unit. These materials include:

- Hazardous waste as defined by NCGS 130A-290(a)(8), including hazardous waste from conditionally exempt small quantity generators.
- Polychlorinated biphenyls (PCB) wastes as defined in 40 CFR 761 with the exception of trace amounts found in materials such as consumer electronics.
- Bulk or non-containerized liquid wastes unless the waste is household waste other than septic waste and waste oil; or the waste is leachate or gas condensate derived from the MSW landfill unit. A liquid determination will be performed by the paint filter test (see **Appendix A** for apparatus and procedure).
- Containers holding liquid wastes unless the waste is household waste.

2.3.2 C&D Landfill Unit

Only wastes as defined in **Section 2.2.2** above may be accepted for disposal in the C&D landfill unit. Prohibited wastes include waste exclusions listed in 15A NCAC 13B 0.0542 as follows:

- Wastewater treatment sludge. Wastewater treatment sludge may be accepted, with the approval of the DWM, for utilization as a soil conditioner and incorporated into or applied onto the vegetative soil layer component of the final

cover system. In this case, the sludge will be applied at no greater than agronomic rates and to a maximum depth of six inches.

- Containers such as tubes, drums, barrels, tanks, cans, and bottles unless they are empty and perforated to ensure that no liquid, hazardous, or municipal solid waste is contained therein;
- Garbage as defined in G.S. 130A-290(a)(7);
- Hazardous waste as defined in G.S. 130A-290(a)(8), to also include hazardous waste from conditionally exempt small quantity generators;
- Industrial solid waste unless a demonstration has been made and approved by the DWM that the landfill meets the requirements of Rule .0503(2)(d)(ii)(A);
- Liquid wastes;
- Medical waste as defined in G.S. 130A-290(a)(18);
- Municipal solid waste as defined in G.S. 130A-290(a)(18a);
- Polychlorinated biphenyls (PCB) wastes as defined in 40 CFR 761;
- Radioactive waste as defined in G.S. 104E-5(14);
- Septage as defined in G.S. 130A-290(a)(32);
- Sludge as defined in G.S. 130A-290(a)(34);
- Special wastes as defined in G.S. 130A-290(a)(40);
- White goods as defined in G.S. 130A-290(a)(44); and
- Yard trash as defined in G.S. 130A-290(a)(45).

The following wastes cannot be received if separate from C&D waste:

- lamps or bulbs including but not limited to halogen, incandescent, neon or fluorescent;
- lighting ballast or fixtures;
- thermostats and light switches;
- batteries including but not limited to those from exit and emergency lights and smoke detectors;
- lead pipes;
- lead roof flashing;
- transformers;
- capacitors; and
- copper chrome arsenate (CCA) and creosote treated woods.

Waste accepted for disposal in the C&D landfill unit must be readily identifiable as C&D waste and must not have been shredded, pulverized, or processed to such an extent that the composition of the original waste cannot be readily ascertained except as specified as follows:

- C&D waste that has been shredded, pulverized, or otherwise processed may be accepted for disposal from a facility that has received a permit from an authorized regulatory authority which specifies such activities are inspected by the authority, and whose primary purpose is recycling and reuse of the C&D material. For this case, a waste screening plan and waste acceptance plan will be prepared and made available to the DWM upon request.

The County will not dispose of C&D waste that is known to be generated within the boundaries of a unit of local government that by ordinance:

(A) Prohibits generators or collectors of C&D waste from disposing that type or form of C&D waste.
(B) Requires generators or collectors of C&D waste to recycle that type or form of C&D waste.

2.4 WASTE SCREENING PROGRAMS

In order to assure that prohibited wastes are not entering the landfill facility, screening programs have been implemented at the landfill. Waste received at both the scale house entrance and waste taken to the working face is inspected by trained personnel. These individuals have been trained to spot indications of suspicious wastes, including: hazardous placarding or markings, liquids, powders or dusts, sludges, bright or unusual colors, drums or commercial size containers, and "chemical" odors. Screening programs for visual and olfactory characteristics of prohibited wastes are an ongoing part of the landfill operation.

Records of information gathered as part of the waste screening programs will be maintained at the landfill site during its active life and as long as required by the County and the DWM.

2.4.1 Waste Receiving and Inspection

All vehicles must stop at the scale house located at each entrance of the facility and visitors are required to sign-in. All waste transportation vehicles are weighed and the content of the load assessed. The scale attendant(s) requests from the driver of the vehicle a description of the waste it is carrying to ensure that unacceptable waste is not allowed into the landfill. The attendant(s) then visually checks the vehicle as it crosses the scale. Signs informing users of the acceptable and unacceptable types of waste are posted at the scale house. Once passing the scales, the vehicles are routed to the appropriate landfill unit or other area (convenience center, etc.) as appropriate.

Vehicles are randomly selected for screening on a regular basis, depending on personnel available. At least one vehicle per week, but not less than 1% by weight of the waste stream entering the landfill (based on the previous week's total), will be randomly selected by inspection personnel. A random truck number and time will be selected (e.g., the tenth load after 10:00 a.m.) on the day of inspections. However, if something looks suspicious is spotted in any waste load, that load is inspected further.

Vehicles selected for inspection are directed to an area of intermediate cover adjacent to the working face where the vehicle will be unloaded. Waste is carefully spread using suitable equipment. An attendant trained to identify wastes that are unacceptable at the landfill inspects the waste discharged at the screening site. If unacceptable waste is found, including wastes generated from outside of the service area, the load will be isolated and secured by berming off the area. For unacceptable wastes that are non-

hazardous, the Solid Waste Director will then notify officials of the DWM (see **Section 1.2.2**) within 24 hours of attempted disposal of any waste the landfill is not permitted to receive in order to determine the proper course of action. For unacceptable wastes that are hazardous, the Hazardous Waste Contingency Plan outlined in **Section 2.4.2** will be followed. The hauler is responsible for removing unacceptable waste from the landfill property.

If no unacceptable waste is found, the load will be pushed to the working face and incorporated into the daily waste cell. All random waste inspections will be documented by landfill staff using the waste screening form provided in **Appendix B**.

In addition to random waste screening described above, waste unloaded on the active face will be inspected by the equipment operators, trained to spot unacceptable wastes, before and during spreading and compaction. Any suspicious looking waste is reported immediately to the designated primary inspector for further evaluation.

2.4.2 Hazardous Waste Contingency Plan

In the event that identifiable hazardous waste or waste of questionable character is detected at the landfill, appropriate equipment, protective gear, personnel, and materials as necessary will be employed to isolate the wastes. The DWM will be notified immediately (see **Section 1.2.2**) that an attempt was made to dispose of hazardous waste at the landfill. If the vehicle attempting disposal of such waste is known, all attempts will be made to prevent that vehicle from leaving the site or, if the vehicle has left the site, immediate notice will be served on the owner of the vehicle that hazardous waste, for which they have responsibility, has been disposed of at the landfill.

The County will assist the DWM as necessary and appropriate in the removal and disposition of the hazardous waste and in the prosecution of responsible parties. If needed, the hazardous waste will be covered with either on-site soils or other tarping material until such time when an appropriate method can be implemented to properly handle the waste. The cost of the removal and disposing of the hazardous waste will be charged to the owner of the vehicle involved. Any vehicle owner or operator who knowingly dumps hazardous waste in the landfill may be barred from using the landfill.

Should an incident where hazardous waste is found at the landfill occur, the event will be documented by landfill staff using the waste screening form provided in **Appendix B**.

2.5 WASTE DISPOSAL

2.5.1 Access

Traffic will be clearly directed to the appropriate active access road. For the active lined landfill unit(s), all vehicles entering the unit will use the active ramp to avoid damaging the liner system. Traffic speed on the ramp should be less than 10 MPH. Rutting of gravel roadway surfaces must be repaired by placement of additional gravel on the

roadway and not solely by grading the rut. This will maintain the separator geotextile placed below most gravel roadway surfaces.

The location of access roads during waste placement will be determined by operations personnel in order to reflect waste placement strategy. Additionally, access will be maintained for site monitoring locations.

2.5.2 General Procedures

For each active landfill unit, waste transportation vehicles will arrive at the working face at random intervals. There may be a number of vehicles unloading waste at the same time, while other vehicles are waiting. In order to maintain control over the unloading of waste, a certain number of vehicles will be allowed on the working face at a time. The actual number will be determined by the truck spotter. This procedure will be used in order to minimize the potential of unloading unacceptable waste and to control disposal activity. Operations at the working face will be conducted in a manner which will encourage the efficient movement of transportation vehicles to and from the working face, and to expedite the unloading of waste.

The approach to the working face will be maintained such that two or more vehicles may safely unload side by side. A vehicle turn-around area large enough to enable vehicles to arrive and turn around safely with reasonable speed will be provided adjacent to the unloading area. The vehicles will back to a vacant area near the working face to unload. Upon completion of the unloading operation, the transportation vehicles will immediately leave the working face area. Personnel will direct traffic necessary to expedite safe movement of vehicles.

Waste unloading at the landfill will be controlled to prevent disposal in locations other than those specified by site management. Such control will also be used to confine the working face to a minimum width, yet allow safe and efficient operations. The width and length of the working face will be maintained as small as practical in order to maintain the appearance of the site, control windblown waste, and minimize the amount of cover required each day. Normally, only one working face will be active on any given day, with all deposited waste in other areas covered by either daily/periodic, intermediate, or final cover, as appropriate.

The procedures for placement and compaction of solid waste include: unloading of vehicles, spreading of waste into 2 foot lifts, and compaction on relatively flat slopes (i.e. 5H:1V max.) using a landfill compactor and a minimum number of three full passes.

Caution will be used in wet conditions such that no waste will be placed into ponded water. Likewise, surface water will not be allowed to be impounded over waste.

Wind screens adjacent to the working face may be used as required to control windblown waste.

The use of portable signs with directional arrows and portable traffic barricades will facilitate the unloading of wastes to the designated disposal locations. These signs and barricades will be placed along the access route to the working face of the landfill or other designated areas which may be established.

2.5.3 MSW Landfill Unit

2.5.3.1 Cell Operations and Phasing

Each lined landfill unit is divided into cells. Each cell will be filled in sequence until the entire footprint is covered with waste. Phasing drawings are presented in the appropriate permit application for each landfill unit.

It is advantageous to begin to establish final cover grades along the perimeter berms as soon as is possible. This will allow earlier construction of intermediate or final cover to promote "clean" runoff and to spread out final cover construction costs.

2.5.3.2 Cell Activation

Before placing waste in a particular area of any cell, that area must be connected to the leachate collection system (LCS) by removing (or suitably perforating) the geosynthetic rain cover (if any) and/or making any required piping connections such that all liquid collected in that area will flow to the sump. Next, just ahead of waste placement operations, the Type GT-S geotextile placed over the gravel columns is to be cut and removed such that waste will be placed in direct contact with the coarse aggregate.

Once an area has reached its effective capacity, operations will move to the next scheduled area. Prior to placing waste in a new area, it must be connected to the LCS as described above.

2.5.3.3 Placement of Initial Lift

During waste placement operations, the landfill liner system is most vulnerable during the placement of the first lift of waste. The first lift of waste should be comprised of select loads spread on top of the protective cover layer. These select loads must be free of long or large pieces of waste that may push through the protective cover layer and damage the liner system. Workers will be positioned near the working face to check for any waste which could possibly penetrate the protective cover layer. The first lift should be a minimum of four (4) feet thick and provide sufficient area for at least one day's operation without placing other areas of the liner in jeopardy.

The side slopes of the liner system are also vulnerable during placement of the first lift of waste. As with the bottom slopes, the first lift of waste against the side

slopes should be comprised of select loads.

In the event that the landfill staff identifies any damage to any part of the landfill's liner system, they should immediately initiate its repair. Additionally, they should document the damage and the repair as a part of the operating record.

2.5.3.4 Equipment Operations Within the Landfill

Both the facility's operational vehicles and waste transportation vehicles must be restricted as follows within the lined landfill:

- Equipment operation directly on the protective cover will be limited to rubber-tired vehicles having a maximum ground contact, i.e., tire pressure, of less than 32 psi.
- A minimum vertical separation of 3 feet will be maintained between the geomembrane liner and all waste transportation vehicles.
- A minimum vertical separation of 5 feet will be maintained between the geomembrane liner and waste compactors.

The operation of vehicles within those portions of the landfill not actively receiving waste should be restricted to activities associated with erosion and sedimentation control.

2.5.4 Special Waste Management

2.5.4.1 Asbestos Management (MSW or C&D Landfill Units)

The County may dispose of asbestos within either the MSW or C&D landfill unit. Asbestos will only be accepted if it has been processed and packaged in accordance with State and Federal (40 CFR 61) regulations. Asbestos will arrive at the site in vehicles that contain only the asbestos waste and only after advance notification by the generator.

Once the hauler brings the asbestos to the landfill, the hauler will be directed to the designated asbestos disposal area by operations personnel. The designated disposal area will be prepared by operations personnel by leveling a small area using a dozer or loader. Prior to disposal, the landfill operators will stockpile cover soil near the designated asbestos disposal area. The volume of soil stockpiled will be sufficient to cover the waste and to provide any berms, etc. to maintain temporary separation from other landfill traffic.

Once placed in the prepared area, the asbestos waste will be covered with a minimum of 18 inches of cover soil placed in a single lift. The surface of the cover soil will be compacted and graded using a tracked dozer or loader. The landfill compactor will be prohibited from operating over asbestos disposal areas until at least 18 inches of cover are in-place.

The landfill staff will record the approximate location and elevation of the asbestos waste once cover is in-place. The Solid Waste Director will then review pertinent disposal and location information to assure compliance with regulatory requirements and enter the information into the Operating Record.

Once disposal and recording for asbestos waste is completed, the disposal area may be covered with waste. No excavation into designated asbestos disposal areas will be permitted.

In general, for the lined landfill unit(s), no asbestos will be stored over gravel columns or over sump areas in order to minimize the potential for future disturbance.

2.5.4.2 Sewage Sludge Management (MSW Landfill Unit)

Sewage sludge may be accepted for disposal within the MSW landfill unit in accordance with Federal and State requirements. Sewage sludge will be co-disposed along with other wastes if the sludge passes the liquids restriction criteria (i.e., the Paint Filter Test) and has an acceptable Toxicity Characteristic Leaching Procedure (TCLP) test. Such testing will be the responsibility of the generator, but landfill staff may conduct spot testing.

In order to minimize the potential for clogging of the leachate collection and removal system, sewage sludge will not be placed within the first lift of waste. Sewage sludge may also be used as a soil conditioner incorporated into the vegetative soil layer of the final cover.

2.5.4.3 Spoiled Food and Animal Waste (MSW Landfill Unit)

The disposal of spoiled foods, animal carcasses, and other animal wastes within the MSW landfill unit will be handled as follows. The generator of the material must call in advance to the landfill, and a determination will be made as to whether or not the waste will be accepted. If the waste is approved, the generator will present the waste at a predetermined time. An area for disposal will already have been prepared and the waste will be covered immediately.

2.5.5 Daily or Periodic Cover

2.5.5.1 MSW Landfill Unit

At the completion of waste placement each day, a 6 inch layer of earthen material or approved alternate daily cover (i.e. tarps, etc.) will be placed over the working face. This daily cover is intended to control vectors, fire, odors, and blowing litter. If the County should desire to use an alternate daily cover, a formal request and an appropriate demonstration will be made to the DWM.

2.5.5.2 C&D Landfill Unit

At the completion of waste placement each week, or sooner if the area of exposed waste exceeds one-half acre in size, a 6-inch layer of earthen material or other material as approved by the DWM will be placed over the exposed waste. This periodic cover is intended to control vectors, fire, odors, and blowing debris.

2.5.6 Intermediate Cover

A 12 inch layer of soil cover should be placed on all waste surfaces that have not received waste in 30 days but are below final elevation. This intermediate cover should be seeded immediately and graded such that all precipitation run-off is channeled to the surface water systems.

2.5.7 Height Monitoring

Approximately every month, the landfill staff will monitor landfill top and side slope elevations with a level. When such elevations approach design grades, the final top-of-waste grades will be staked to limit over-placement of waste.

2.6 DECONSTRUCTION OF MOBILE HOMES

The deconstruction of mobile homes is handled in an area adjacent to the C&D landfill unit. A description of the process is provided in **Appendix D**.

2.7 RECYCLING CENTER OPERATIONS

The landfill facility's recycling center is used to separate commingled recyclable material from curbside collection programs, as well as source separated recyclables such as cardboard. The facility is equipped with a conveyor system to facilitate hand sorting of materials, bins for storage, and a baler. Cardboard, mixed paper, old newsprint, aluminum, steel cans, and plastic are typically handled at the facility.

2.8 CONVENIENCE CENTER OPERATIONS

The operation of the citizen's convenience center is as follows:

The convenience center is set up with up to eight 40 yard roll-off containers for the collection of MSW (small loads) and recyclables. The County currently typically separately collects aluminum cans, newspaper, cardboard, mixed no. 1 and no. 2 plastics, and brown, green, and clear glass. The convenience center also includes collection facilities for white goods, used tires, waste oil, and batteries.

Within the white goods handling area/building, County personnel remove the freon, as necessary, and load the white goods into three to four large roll-off containers. Typically, every week, the County hauls the full containers to a local salvage yard, where the white goods can be

recycled.

Used tires are collected at the convenience center in up to three tire trailers. Once one or more trailers are full, the used tires are taken to a tire recycler for recycling.

A full time attendant looks over the convenience center operations.

2.9 HOUSEHOLD HAZARDOUS WASTE COLLECTION FACILITY OPERATIONS

The household hazardous waste (HHW) collection facility accepts only household hazardous wastes and wastes from conditionally exempt small quantity generators (as determined by County personnel). The facility is designed to handle HHW from the following general categories: 1) yard and garden products; 2) automotive products; 3) paints and solvents; 4) household cleaning products; and 5) miscellaneous HHW. A detailed description of the operation of the HHW collection facility, including procedures for both normal operations and a contingency plan for emergency situations, is provided in **Appendix E**.

2.10 SWAP SHOP OPERATIONS

The swap shop operates as an exchange program in order to cut down on unnecessary waste disposal. County residents may drop off unwanted usable items or may take items left by others.

THIS PAGE INTENTIONALLY LEFT BLANK

SECTION 3.0
ENVIRONMENTAL MANAGEMENT

3.1 OVERVIEW

This section reviews the overall environmental management tasks required for the successful operation of the landfill facility. Emphasis is given to the supplemental tasks required for the lined landfill units.

3.2 SURFACE WATER CONTROL

As used herein, the definition of "surface water" is water which results from precipitation or site run-on that has not contacted the waste.

Proper control of surface water at the landfill will accomplish the following goals:

- Minimize the potential for the discharge of pollutants to waters of the United States, including wetlands (point or non-point sources);
- Prevent the run-on of surface water into the lined landfill unit(s) or the active face(s);
- Prevent the run-off of surface water that has come into contact with the waste (i.e. leachate);
- Limit the erosion caused by surface waters;
- Limit sediments carried off-site by surface waters; and
- Maximize the <u>SEPARATION</u> of SURFACE water from LEACHATE.

Separate erosion and sedimentation control plans have been provided for the various landfill units. These plans describe both short and long term engineered features and practices for preventing erosion and controlling sedimentation at this site. The following is a brief discussion of some of these features and practices, focusing more on the landfill units.

3.2.1 <u>Surface Water Run-On Control</u>

The perimeter berms and/or perimeter channels around the landfill unit(s) are designed to prevent the run-on of surface water from adjacent land into the landfill. Additional structures such as diversion berms, channels, down pipes, etc. carry surface water away from the landfill.

3.2.2 <u>Active Face Run-Off Control</u>

Particular care is required to ensure that surface water coming from the active face, e.g.

having potential contact with the waste, is captured by the leachate collection system (LCS) and/or is allowed to percolate into the underlying waste. Only run-off from waste surfaces that have received adequate cover is not considered leachate and should be directed to the stormwater drainage system where practical.

3.2.3 Erosion Control

The serviceability of the landfill relies heavily on soil berms, barrier layers, and agricultural layers that are readily eroded by flowing water. Erosion control provisions incorporated in the landfill include the following:

- The slope of the working face must be no steeper than 5H:1V where practical to limit erosion of the daily/periodic cover.
- Intermediate cover that has been exposed for more than 30 days must be seeded immediately and repaired when erosion features are identified.
- Drainage breaks (diversion berms, rain gutters, etc.) are provided on the final cover to limit the flow length of run-off.
- Water collected by each drainage break is routed to stormwater drainage channels or down pipes so that the run-off volume does not accumulate going down the slope.
- The vegetative soil layer placed over the final cover must be seeded immediately.

Additional erosion control measures have been taken within the drainage channels and at points of stormwater discharge. All final cover should be inspected regularly for erosion damage and promptly repaired.

3.2.4 Sedimentation Control

Stormwater run-off from the landfill unit(s) is conveyed to one of the on site sediment basins and/or traps. These basins and/or traps should be inspected regularly for sediment build-up or erosion damage. The basins and/or traps should be cleaned out when sediment fills the lower half of the basin.

3.2.5 Separation of Stormwater/Leachate - MSW Landfill Units

The stormwater separation system is accomplished by dividing the MSW landfill units into separate cells to reduce the volume of leachate generated and minimize the impoundment of stormwater within the landfill. The separation system allows stormwater in cells which have not yet received waste to be pumped out of the landfill to perimeter drainage features. During activation of a cell, the Owner will connect the cell to the LCS as discussed in **Section 2.5.3.2**.

3.3 LEACHATE MANAGEMENT - MSW LANDFILL UNITS

The leachate management system for the MSW landfill units consists of the LCS, the leachate transmission piping, pumps, valve boxes, valves, the existing leachate storage lagoon (Closed Phase 1 unit), and the leachate storage tanks (Active Phase 2 unit).

Leachate from each MSW landfill unit is collected in the leachate sumps at the low end(s) of each unit. Leachate collected in each sump is pumped to the leachate storage lagoon (Phase 1 - Area 2) or leachate storage tanks (Phase 2) via a HDPE force main (except for Areas 1 and 3 of Phase 1 which drain via a gravity penetration and HDPE gravity main). From the storage tanks, the leachate is pumped into tanker trucks and hauled (or may in the future be pumped via force main) to a local wastewater treatment plant (WWTP). If approved, the County plans to implement leachate recirculation in Phase 2 once enough waste is in place. Planned methods of leachate recirculation are as described in **Appendix C**. Refer to the appropriate permit application for a detailed discussion and details of the leachate management system for each lined landfill unit.

3.3.1 Leachate Collection System (LCS)

A blanket drainage layer (either natural and/or geosynthetic drainage media) covers the liner system to collect and remove leachate draining from the waste. In addition, a large flow capacity network of perforated pipe and gravel drains is constructed in the blanket drain. The LCS is designed to remove inflow from a 25-year, 24-hour rainstorm. As such, its capacity is very large compared to that required to accommodate routine leachate generation rates once waste covers the landfill footprint.

The LCS has been designed to minimize the impact of long-term biological clogging as follows:

- Cleanouts are provided on the major perforated leachate collection pipes;
- No geotextiles will be used between the waste and the gravel columns; and
- The use of coarse aggregate around collection pipes (gravel columns) allows hydro-washing of the pipe and aggregate to remove biological growth.

3.3.1.1 Drainage Aggregate Maintenance

The exposed surface of the drainage aggregate should be inspected monthly and after each large rain storm to check for buildup of sediment on the aggregate. Sediment buildup must be periodically removed carefully with a backhoe. Aggregate that is removed must be replaced with new clean material. Per **Section 2.5.3.2**, the Type GT-S geotextile overlying the gravel column must be removed just prior to the placement of waste over that portion of gravel column.

3.3.1.2 Collection Pipe Cleanout

Remote camera inspection and flushing (if necessary) of all leachate collection piping accessible with a cleanout port will be performed every 3 years or earlier if an abnormal reduction in leachate production is observed. An abnormal reduction is defined as a drop in monthly leachate production of 30% or more as compared to the monthly average over the prior 6 month period and which does not appear to be the result of a reduction in rainfall, the covering of new cell areas, etc. If piping is mostly clean at the initial 3 year inspection, the County may petition the DWM to increase the inspection frequency to 5 year intervals.

The locations of the collection system that have sediment or biological growth buildup will be cleaned using high pressure water jetting equipment. The water jetting system should generate greater than 2,000 psi water pressure. Use of the high pressure water jetting equipment should be limited to only those portions of the piping system with buildup.

3.3.1.3 Leachate Removal

As constructed, leachate is collected in one or more sumps at the low points of the landfill and is removed from the landfill via a side riser pump or through a gravity penetration. The leachate is routed to the leachate storage lagoon or tanks via a force main or gravity main or into the leachate recirculation system.

Under normal conditions, the County will remove (via pump and haul) leachate from the Phase 2 primary storage tank (Tank A) at a rate to maintain a typical volume of 200,000 gallons (approximate 20 foot depth), or less, of leachate in the tank. This allows ample volume in the tank to handle the anticipated "surge" event caused by a design storm and minimizes the potential for ponding within the landfill. Additional draw-down of the tank to a minimum volume of approximately 20,000 gallons (approximate 1 foot depth) will be performed in advance of predicted heavy rainfall (tropical storm, hurricane, etc.). Likewise, the County will routinely remove leachate from the Phase 1 lagoon.

3.3.1.4 Operation and Maintenance of Leachate Pumps and Storage Tanks

Operation and maintenance of leachate pumps and the storage tanks will be in accordance with the appropriate manufacturer's recommendations. The County Solid Waste Director or his designee will be responsible for following and documenting, as required, these activities.

3.3.2 Leachate Quality Sampling

Semi-annual leachate quality sampling and analysis will be performed during operation of the Subtitle D MSW landfill units. Samples will be recovered as grab samples from the following locations:

- Phase 1: Sample from existing leachate storage lagoon; and
- Phase 2: Sample from leachate storage tanks.

The parameters to be analyzed will include BOD, COD, temperature, conductivity, pH, ammonia, suspended solids, Appendix I constituents, sulfates, and nitrates.

3.3.3 Record Keeping

Accurate records for the following will be maintained at the landfill in accordance with **Section 1.13**.

Leachate Generation (Monthly):

Phase 1 (Quantity hauled from leachate lagoon)
Phase 2 (Quantity hauled from leachate tank and/or flowmeter data)

Leachate Quality (Semi-Annual):

Phase 1 (From leachate lagoon)
Phase 2 (At side risers or tank)

3.3.4 Leachate Contingency Plan

In the unlikely event that leachate levels within the existing leachate storage lagoon or tanks approach the freeboard capacity, due to unforeseen events, the DWM will be verbally notified (see **Section 1.2.2**) and the leachate flow will be valved off and temporarily stored in the landfill until the level of leachate in the lagoon or tanks can be lowered by pump and haul operations or direct pumping if a force main is in place. Written documentation describing the unforeseen events, the actions carried out to remove the stored leachate, and a strategy for preventing future occurrences will be provided to the DWM within 30 days following any such occurrence.

3.3.5 Leachate Release Prevention Plan

In order to minimize the potential release of leachate outside the leachate management system, Davidson County personnel will follow the procedures outlined in the **Leachate Release Prevention Plan** (see **Appendix F**). This plan outlines weekly inspection procedures (Phase 2 leachate storage tank area), training requirements, and record keeping as well as procedures to be taken should a leachate release occur.

3.4 LEACHATE MANAGEMENT - C&D LANDFILL UNIT

In order to ensure that heads at the low end of Phase 1 are not excessive, the County will periodically use a lift pump to pump out leachate from the low end of Phase 1 via a side riser pipe into a tanker truck for transfer either into the County's existing storage lagoon or to a wastewater treatment plant (WWTP).

3.5 WATER QUALITY MONITORING

The monitoring program and procedures outlined in the current Water Quality Monitoring Plan (applies to both MSW and C&D landfill units) will be followed for the monitoring of site groundwater monitoring wells and surface water monitoring locations. The results of the water quality monitoring program will be placed in the facility operating record as described in **Section 1.13**.

3.6 LANDFILL GAS (LFG) MANAGEMENT

3.6.1 MSW Landfill Units

A landfill gas (LFG) management system is included as part of the design of the MSW landfill units. Refer to the appropriate permit application for a detailed discussion and details of the LFG management system for each landfill unit.

As the operation and maintenance of this system involves contact with explosive gases, operational staff involved with the operation and maintenance of this system should be specifically trained in the management and response for situations such as fire or explosion, confined space, drilling, and overhead hazards, or any other mechanical hazards addressed by the equipment Manufacturer's literature. Although this manual does not address the operation of the LFG management system, reference is made to the Landfill Gas Operation and Maintenance Manual of Practice prepared by the Solid Waste Association of North America (SWANA)[1], which provides a general body of knowledge concerning the operation and maintenance of these systems.

3.6.2 C&D Landfill Unit

Landfill gas (LFG) generated from the C&D landfill unit will be vented using passive vents placed at the time of closure. Refer to the appropriate permit application for details of these vents.

[1] SWANA (1997), Landfill Gas Operation and Maintenance Manual of Practice, SR-430-23070, Solid Waste Association of North America, Silver Spring, MD, March 1997.

3.7 LANDFILL GAS (LFG) MONITORING PLAN

The County will implement a routine landfill gas (LFG) monitoring program for both MSW and C&D landfill units to ensure that methane concentrations do not exceed 25 percent of the lower explosive limit (LEL) (1.25% methane (CH_4)) in facility structures, or 100 percent of the LEL (5% CH_4) at property boundaries. LFG monitoring activities and remedial actions for concentrations exceeding these requirements will be in accordance with each unit's current landfill gas monitoring plan.

3.7.1 Record Keeping

Results of LFG monitoring and description of any remedial measures will be placed in the facility operating record as described in **Section 1.13**.

3.8 VECTOR CONTROL

3.8.1 MSW Landfill Unit

Control of insects, rodents, and birds will be accomplished by compaction of the waste and the use of daily cover. If vector control becomes a problem, additional measures will be taken to ensure the protection of human health.

3.8.2 C&D Landfill Unit

Due to the nature of the waste disposed in this landfill unit, vector control is not anticipated to be of concern. Note that the use of periodic cover will discourage animals from nesting in the waste.

3.9 LITTER CONTROL

The vegetative trees/bushes act as a barrier to keep litter contained within the site and a litter control crew will pick up litter around the site and on access roads daily as necessary. Wind screens adjacent to active areas will be used as required to control windblown waste. Additionally, landfill staff will make operational changes as practical based on wind conditions that may spread litter.

3.10 ODOR CONTROL

3.10.1 MSW Landfill Unit

Odorous or potentially odorous materials will be covered as soon as possible to avoid odor problems. If odor control becomes a problem, additional measures will be taken to ensure odor control.

3.10.2 C&D Landfill Unit

Due to the nature of the waste disposed in this landfill unit, odor control is not anticipated to be of concern. However, if odor control becomes a problem, additional measures (such as additional cover over wastes such as drywall) will be taken to ensure odor control.

3.11 DUST CONTROL

Dust related to waste hauler traffic on the access roads will be minimized by using a water truck to limit dust on the gravel portion of the road. Dust generated by excavation of cover soil will be limited by watering the cut soil areas if accessible to the water truck.

3.12 AIR QUALITY

The County will follow all air quality requirements which are applicable to the landfill facility. This includes applicable requirements developed under a State Implementation Plan (SIP) approved or promulgated by the U.S. EPA Administrator pursuant to Section 110 of the Clean Air Act.

3.13 LEACHATE SEEPS

Leachate seeps can occur due to a variety of circumstances. The goal in dealing with leachate seeps is to prevent seepage from leaving the limits of waste disposal areas and to minimize the potential for reoccurrence. If evidence of leachate seeps is observed, the County will take the following actions. Depending on the circumstances, various combinations of actions may be appropriate.

1. If leachate is observed outside of the limits of waste disposal areas, notify the DWM (see **Section 1.2.2**).
2. Contain the flow of leachate using soil berms and/or excavation.
3. Excavate the area of seepage to attempt to allow flow into the underlying waste (i.e. break-up soil layers that may be causing the seep.).
4. For contained leachate that will not flow into underlying waste, a pump may be required to route the leachate to an existing leachate collection system cleanout pipe (lined landfill units) or to a tanker truck.
5. For lined landfill units, french drains may be utilized for routing the seepage to the leachate collection system (via cleanout pipes).
6. The use of soil (particularly clay) to plug the seepage may also be successful in the case where flows are minor.
7. Remove and dispose of impacted cover soils accordingly.
8. Repair landfill cover as necessary.

LEGEND

660	EXISTING 10' CONTOUR (SEE REFERENCE 1)
	EXISTING 2' CONTOUR
	FACILITY BOUNDARY (PROPERTY LINE)
	PROPERTY LINE (OTHER COUNTY PROPERTY)
	LIMIT OF LINER (EXISTING LINED UNITS)
	APPROXIMATE EXISTING WASTE LIMITS (UNLINED UNITS)
	WETLAND BOUNDARY (SEE REFERENCE 2)
	STREAM (SEE REFERENCE 2)
MW-8D	EXISTING MONITORING WELL
SW-3	EXISTING SURFACE WATER SAMPLING POINT

REFERENCES

1. OVERALL TOPOGRAPHY PER NORTH CAROLINA DEPARTMENT OF TRANSPORTATION, CONTOUR AND ELEVATION DATA GENERATED FROM LIGHT DETECTION AND RANGING (LIDAR) DATA OBTAINED FROM THE NORTH CAROLINA FLOOD MAPPING PROGRAM AND DATED SEPTEMBER 2004. TOPOGRAPHY IN ACTIVE C&D AND MSW AREAS FROM SPATIAL DATA, AERIAL DATED 5/27/10.
2. WETLAND SURVEY BY LEXINGTON LAND SURVEYING, DATED DATED 3/28/01.
3. WETLANDS AND STREAM LOCATIONS ON SOUTHEAST SIDE OF C&D LANDFILL FROM DELINEATION PERFORMED BY CAROLINA ECOSYSTEMS, INC., FEBRUARY 2009, AND SURVEYED BY MICHAEL GREEN ASSOCIATES, P.A., FEBRUARY 2009.

0 400' 800' 1200'

DATE	NO.	REVISION
4/11	1	UPDATED TOPOGRAPHY & INFORMATION

RICHARDSON SMITH GARDNER & ASSOCIATES
14 N. Boylan Ave.
Raleigh, N.C. 27603
ph: 919-828-0577
fax: 919-828-3899
www.rsgengineers.com

SEAL

SEAL

PROJECT TITLE: DAVIDSON COUNTY LANDFILL

DRAWING TITLE: EXISTING AND PROPOSED LANDFILL UNITS AND SOLID WASTE MANAGEMENT ACTIVITIES

DESIGNED BY: P.K.S.	DRAWN BY: J.A.L.
CHECKED BY:	PROJECT NO.: DAVDCO 08-5
SCALE: AS SHOWN	DATE: MARCH 2009
FILE NAME: DAVDCO-D0600A	
SHEET NO. 1	DRAWING NO.

G:\CAD\Davidson\Davdco 08-5\rsg 02181 fs\sheets\DAVDCO-D0600A.dwg - 4/19/2011 11:41 AM

THIS PAGE INTENTIONALLY LEFT BLANK

Appendix A

EPA Method 9095

Paint Filter Liquids Test

THIS PAGE INTENTIONALLY LEFT BLANK

METHOD 9095
PAINT FILTER LIQUIDS TEST
From EPA SW-846

1.0 SCOPE AND APPLICATION

1.1 This method is used to determine the presence of free liquids in a representative sample of waste.

1.2 The method is used to determine compliance with 40 CFR 264.314 and 265.314.

2.0 SUMMARY OF METHOD

2.1 A predetermined amount of material is placed in a paint filter. If any portion of the material passes through and drops from the filter within the 5 minute test period, the material is deemed to contain free liquids.

3.0 INTERFERENCES

3.1 Filter media were observed to separate from the filter cone on exposure to alkaline materials. This development causes no problem if the sample is not disturbed.

4.0 APPARATUS AND MATERIALS

4.1 Conical paint filter: Mesh number 60 (fine meshed size). Available at local paint stores such as Sherwin-Williams and Glidden for an approximate cost of $0.07 each.

4.2 Glass funnel: If the paint filter, with the waste, cannot sustain its weight on the ring stand, then a fluted glass funnel or glass funnel with a mouth large enough to allow at least 1 inch of the filter mesh to protrude should be used to support the filter. The funnel is to be fluted or have a large open mouth in order to support the paint filter yet not interfere with the movement, to the graduated cylinder, of the liquid that passes through the filter mesh.

4.3 Ring stand and ring or tripod.

4.4 Graduated cylinder or beaker: 100-mL.

5.0 REAGENTS

5.1 None.

6.0 SAMPLE COLLECTION, PRESERVATION, AND HANDLING

6.1 All samples must be collected according to the directions in Chapter Nine of EPA SW-846.

6.2 A 100 mL or 100 g representative sample is required for the test. If it is not possible to obtain a sample of 100 mL or 100 g that is sufficiently representative of the waste, the analyst may use larger size samples in multiples of 100 mL or 100 g, i.e., 200, 300, 400 mL or g. However, when larger samples are used, analysts shall divide the sample into 100-mL or 100-g portions and test each portion separately. If any portion contains free liquids, the entire sample is considered to have free liquids.

7.0 PROCEDURE

7.1 Assemble test apparatus as shown in Figure 1.

7.2 Place sample in the filter. A funnel may be used to provide support for the paint filter.

7.3 Allow sample to drain for 5 minutes into the graduated cylinder.

7.4 If any portion of the test material collects in the graduated cylinder in the 5-min. period, then the material is deemed to contain free liquids for purposes of 40 CFR 264.314 and 265.314.

8.0 QUALITY CONTROL

8.1 Duplicate samples should be analyzed on a routine basis.

9.0 METHOD PERFORMANCE

9.1 No data provided.

10.0 REFERENCES

10.1 None required.

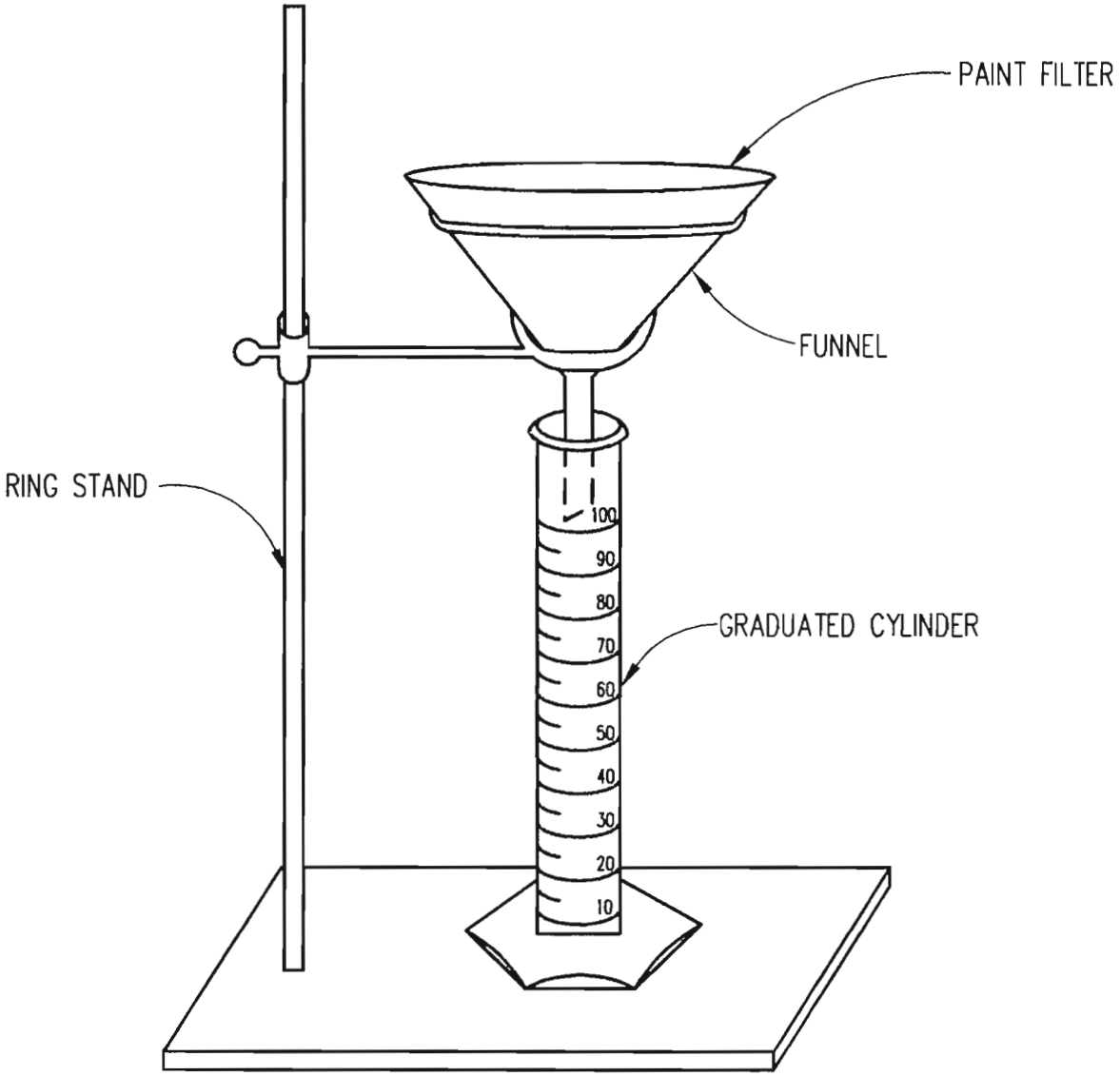

FIGURE 1. PAINT FILTER TEST APPARATUS.

METHOD 9095
PAINT FILTER LIQUIDS TEST

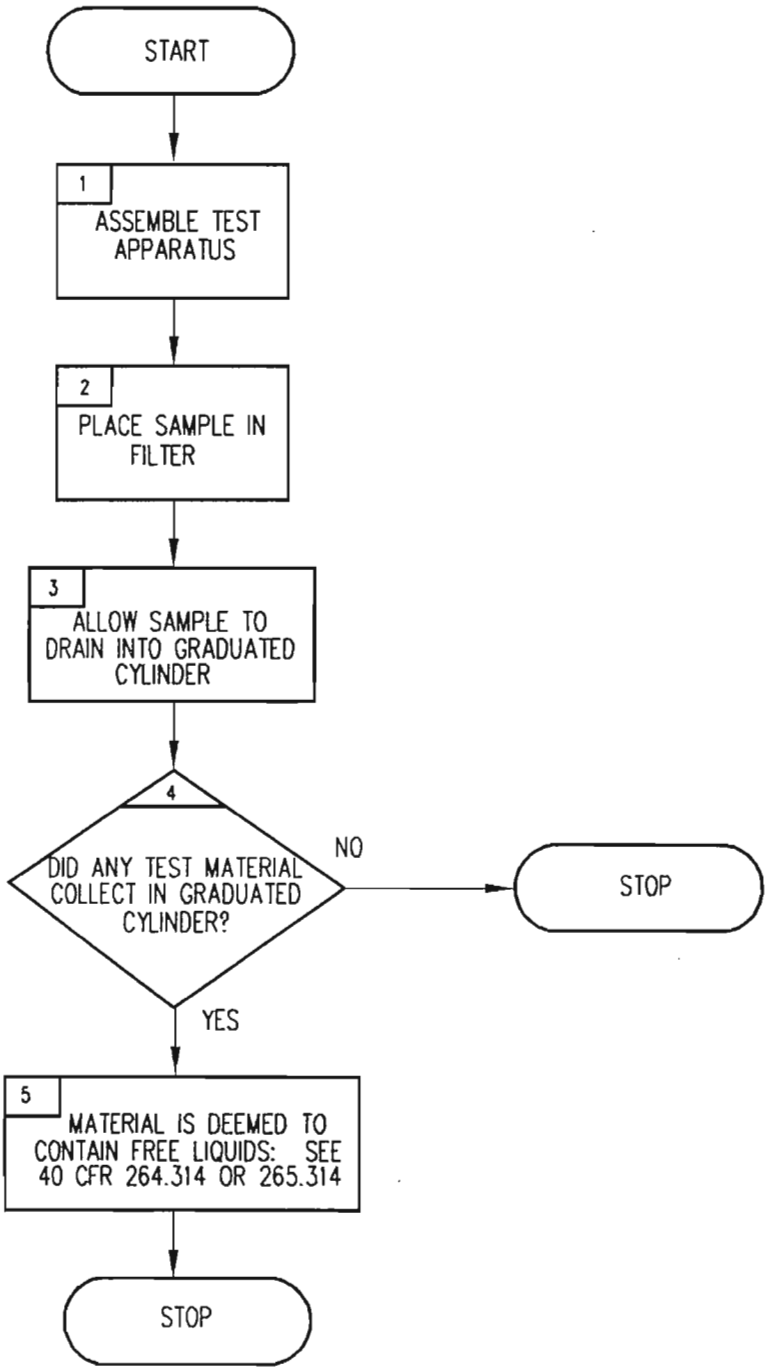

Appendix B

Waste Screening Form

THIS PAGE INTENTIONALLY LEFT BLANK

Davidson County Integrated Solid Waste Management Department
Davidson County C&D Landfill
Permit No. 29-06
(336) 242-2284

WASTE SCREENING FORM

Day / Date: _____ Time Weighed in: _____
Truck Owner: _____ Driver Name: _____
Truck Type: _____ Vehicle ID / Tag No: _____
Weight _____ Tare: _____
Waste Generator / Source: _____

Reason Load Inspected: Random Inspection _____ Staff Initials _____
Detained at Scales _____ Staff Initials _____
Detained by Operating Staff _____ Staff Initials _____

Inspection Location: _____

Approved Waste Determination Form Present? Yes _____ No _____ N/A _____

Description of Load: _____

Load Accepted (signature) _____ Date _____
Load Not Accepted (signature) _____ Date _____

Reason Load Not Accepted (complete only if load not accepted)

Description of Suspicious Contents: Color _____ Haz. Waste Markings _____
Texture _____
Drums Present _____ Smell _____
Est. Cu. Yds. Present in Load _____
Est. Tons Present in Load _____

Davidson County Emergency Management Contacted? Yes _____ No _____

Company or Authority Contacted? _____
Hazardous Materials Present: _____

Hauler Notified (if waste not accepted) Phone: Time Contacted:
Other Observations: _____

Final Disposition
Signed _____ Date _____
Waste Screening Inspector or Solid Waste Director

Attach related correspondence to this form.
File completed form in Operating Record.

THIS PAGE INTENTIONALLY LEFT BLANK

Appendix C

Leachate Recirculation Plan

THIS PAGE INTENTIONALLY LEFT BLANK

Operations Manual
Appendix C: Leachate Recirculation Plan

Davidson County Landfill Facility
Davidson County, North Carolina

Prepared for:
Davidson County Integrated Solid Waste Management
Thomasville, NC

March 2009

RICHARDSON SMITH GARDNER & ASSOCIATES
Engineering and Geological Services
14 N. Boylan Avenue
Raleigh, North Carolina 27603

THIS PAGE INTENTIONALLY LEFT BLANK

DAVIDSON COUNTY
DAVIDSON COUNTY LANDFILL FACILITY

OPERATIONS MANUAL
APPENDIX C: LEACHATE RECIRCULATION PLAN

TABLE OF CONTENTS

Page

1.0 OVERVIEW 1

2.0 REGULATORY REQUIREMENTS 1
- 2.1 40 CFR 258 RCRA Subtitle D 1
- 2.2 North Carolina Rule NCAC T15A: 13B.1600 2
- 2.3 Recirculation Over Alternative Liners 2

3.0 IMPACT OF LEACHATE RECIRCULATION ON THE LCS 2

4.0 LEACHATE RECIRCULATION METHODS AND OPERATIONAL CONSIDERATIONS 2
- 4.1 Horizontal Injection Systems (Trenches/Blanket Drains) 3
- 4.2 Vertical Injection Wells 3
- 4.3 Ponds or Near-Surface Trenches 4
- 4.4 Direct Application at Working Face 4
- 4.5 Other Operational Considerations 5

5.0 FACILITY MONITORING 5
- 5.1 Weather Monitoring 5
- 5.2 Leachate Monitoring 5
- 5.3 Monitoring of Side Slopes 6

6.0 REPORTS 6
- 6.1 Pre-Operational Report 6
  - 6.1.1 Weather Monitoring 6
  - 6.1.2 Baseline Leachate Sampling 6
  - 6.1.3 Operational Procedures 7
  - 6.1.4 Operational Equipment 7
  - 6.1.5 Record Keeping 7
- 6.2 120-Day Trial Period Reporting 7
  - 6.2.1 Progress Report 7
  - 6.2.2 Final Report 7

Table of Contents (Continued)

TABLES

Table 1 NC DWM Policy Elements for Leachate Recirculation

APPENDICES

Appendix C1 Reporting Forms and Logs
- 120-Day Trial Period Monthly Reporting Form
- Leachate Recirculation Monthly Reporting Form
- Leachate Recirculation Daily Log
- Installation Log

DRAWINGS Refer to **Attachment H** of the Permit to Construct Application for the Phase 2 - Area 1 MSW landfill unit.

DAVIDSON COUNTY
DAVIDSON COUNTY LANDFILL FACILITY

OPERATIONS MANUAL
APPENDIX C: LEACHATE RECIRCULATION PLAN

1.0 OVERVIEW

Davidson County has recirculated leachate into the Phase 1 MSW landfill unit (Areas 1 and 3) using horizontal injection trenches and plans to recirculate leachate within the Phase 2 MSW landfill unit both as an alternative to leachate treatment and to promote biodegradation of the waste to produce settlement and resulting additional airspace. By-products of leachate recirculation will be a more biologically stable waste mass and an accelerated production of landfill gas (LFG).

Davidson County plans to use one or more of the following methods to recirculate leachate in Phases 2:

- Horizontal Injection Systems (Trenches/Blanket Drains);
- Vertical Injection Wells;
- Ponds or Near-Surface Trenches; and/or
- Direct Application at Working Face.

Each of these methods is discussed in **Section 4.0**.

2.0 REGULATORY REQUIREMENTS

The recirculation of leachate within lined MSW landfills is provided for in Federal RCRA Subtitle D regulations and not prohibited in North Carolina regulations. It is anticipated that design and operational requirements for recirculation will evolve from guidance provided by the Solid Waste Section of the North Carolina Division of Waste Management (DWM).

2.1 <u>40 CFR 258 RCRA Subtitle D</u>

Federal regulations provide both specific and implied requirements that must be met by landfills recirculating leachate. Relevant sections of the Federal regulations are as follows:

§258.28 (a): Bulk or non-containerized liquid waste may not be placed in the MSWLF units unless: (1) The waste is household waste other than septic waste; or (2) The waste is leachate or gas condensate from the MSWLF unit and the MSWLF unit, whether it is a new or existing MSWLF, or lateral expansion, is designed with a composite liner and leachate collection system as described in §258.40(a)(2) of this part...

§258.40(a)(2): With a composite liner, as defined in paragraph (b) of this section and a leachate collection system that is designed and constructed to maintain less than a 30-cm depth of leachate over the liner. (b) For purposes of this section, *composite liner* means a system consisting of two components: the upper component must consist of a minimum 30-mil flexible membrane liner (FML), and the lower component must consist of at least a two-foot layer of compacted soil with a hydraulic conductivity of no more than $1x10^{-7}$ cm/sec...

2.2 North Carolina Rule NCAC T15A: 13B.1600

North Carolina regulations mirror the above referenced Federal regulations in Rule .1624(b)(1) related to design and construction, Rule .1624(b)(2)(A) related to maximum head, and Rule .1626(9)(a)(ii) related to recirculation of leachate. Currently, the implementation of leachate recirculation is administered using policy established in DWM guidance for leachate recirculation. This guidance establishes basic elements that must be incorporated into a leachate recirculation plan prior to implementation of a 120-day trial period and eventual long-term operation. Key elements of this guidance are listed on **Table 1** along with the location in this plan where the element is addressed.

2.3 Recirculation Over Alternative Liners

Recently Federal approval was given for states to issue research, development, and demonstration (RD&D) permits which would allow leachate recirculation over alternative liners. Davidson County will not proceed with implementation of a leachate recirculation system over an alternative liner until North Carolina adopts this approval.

3.0 IMPACT OF LEACHATE RECIRCULATION ON THE LEACHATE COLLECTION SYSTEM (LCS)

The HELP (v. 3.07) Model was used to evaluate the impact of leachate recirculation on the ability of the LCS to maintain no more than 12 inches of head acting on the composite liner system (except in sumps). This analysis indicates that the average head acting on the liner system is less than 12 inches when a minimum of 30 feet of waste is in place prior to initiating recirculation. The short-term HELP evaluations are conservative in that only a single 30 foot lift of waste is modeled for a 5 year period. As the height of waste is increased, the storage capacity within the waste increases and the resulting head on the liner system decreases.

4.0 LEACHATE RECIRCULATION METHODS AND OPERATIONAL CONSIDERATIONS

As noted above, Davidson County plans to use one or more methods of recirculating leachate into the waste mass. For all methods, a minimum of 30 feet of waste should be in place in the landfill unit prior to the start of leachate recirculation activities. The following sections cover these methods and describe the associated operational considerations. Note that all injection

trenches, blanket drains, vertical injection wells, and near-surface injection trenches which are installed will be documented using the form provided in **Appendix C1**.

4.1 Horizontal Injection Systems (Trenches/Blanket Drains)

Horizontal injection systems will consist of either injection trenches or blanket drains installed horizontally within the landfill. Leachate will be pumped into these systems from the landfill sump pumps using piping placed on the landfill side slopes. Valves will be utilized as required to control the injection to individual trenches or blanket drains.

Injection trenches will consist of a trench excavated in the surface of the waste mass and filled with porous media (stone, tire shreds/chips, crushed glass, etc.) and a perforated injection pipe and backfilled with waste. The trenches are placed at an approximate 30 foot vertical spacing and a maximum 80 foot horizontal spacing. Each successive vertical gallery is staggered to provide for more uniform leachate distribution.

Blanket drains will consist of a blanket drain (drainage geocomposite or layer of porous media) placed in contact with the waste. A perforated injection pipe(s) will be placed under/within the blanket drain. A lift of waste will be placed over the entire drain before leachate recirculation begins.

The leachate injection piping for horizontal injection systems will be high density polyethylene (HDPE) fusion welded pipe having a dimension ratio (DR) of 11 or thicker in order to tolerate expected settlement in the underlying waste. Leachate will be injected under a minimum 10 psi pressure through a series of 1/8 inch holes spaced 10 feet apart. Field tests by RSG have confirmed that this hole size and spacing allows for a very uniform release of leachate from each hole for pipe lengths up to 800 feet in length. Other perforation patterns and injection pressures may also be tried.

Drawing LR1 (Leachate Recirculation Details - Sheet 1 of 2) of the Phase 2 - Area 1 Permit to Construct drawings shows details for the construction of horizontal injection systems.

Depending on the construction of the horizontal injection systems (in particular the perforation pattern of the injection piping) these systems may be used for the future collection of landfill gas (LFG). Optionally, additional perforated piping for LFG collection may be installed during the construction of the horizontal injection systems.

4.2 Vertical Injection Wells

Leachate recirculation using vertical injection wells will consist of installing large or small diameter vertical wells into the waste and injecting leachate through a perforated or slotted pipe (with SCH 80 PVC or HDPE) in much the same fashion as horizontal injection systems. The bottom of vertical injection wells will be no closer than 10 feet from the top of the protective cover.

Large diameter wells will consist of drilling a 36 inch diameter borehole through the waste using a bucket auger, placing a perforated injection pipe and backfill of porous media and completing the well in much the same manner as a landfill gas (LFG) well. Optionally, large diameter wells can be constructed using perforated concrete manhole sections which are placed as the height of waste increases. These manhole sections are filled with porous media and perforated or slotted piping is placed both in the well and radially out from the wells in varying vertical locations to distribute the leachate.

Small diameter wells will consist of drilling small diameter boreholes with hollow stem augers or by vibratory methods and placing a perforated or slotted injection pipe in direct contact with the waste.

Drawing LR2 (Leachate Recirculation Details - Sheet 2 of 2) of the Phase 2 - Area 1 Permit to Construct drawings shows a detail for the construction of a vertical injection well.

As for horizontal injection systems, vertical injection wells (in particular large diameter wells) may be used for the future collection of LFG.

4.3 Ponds or Near-Surface Trenches

Leachate recirculation using ponds or near-surface trenches will consist of excavating shallow ponds or near-surface trenches in flat areas of the landfill which are inactive and filling with leachate to allow the leachate to percolate into the waste below. Either a water truck or piping connected to the leachate pumps will be used to apply leachate to either the ponds or near-surface trenches.

Ponds should have no more than a 2 foot depth of leachate and require a small soil berm around the perimeter of the pond to maintain at least 1 foot of freeboard. If ponds are used, the site may need to employ additional measures to control odors.

Near-surface trenches will consist of an excavated trench up to a maximum 10 foot depth which is filled with porous media and a perforated recirculation pipe and backfilled with waste. If it is desired to collect LFG in the future, HDPE (DR 11 or thicker wall) pipe should be used.

Drawing LR2 of the Phase 2 - Area 1 Permit to Construct drawings shows details for the construction of ponds or near-surface trenches.

4.4 Direct Application at Working Face

Direct application at the working face will consist of applying leachate using a water truck or piping connected to the leachate pumps directly to the waste. The quantity of leachate applied will be limited to that which does not create standing water. Landfill staff may need to utilize small soil berms to contain any leachate runoff depending mainly

workers, the application should only be performed during periods when haulers and other landfill staff are not present in the area. Once applied, the waste should be covered with either waste or daily cover shortly after wetting to contain odors. Direct application at the working face will only be done during daylight hours and no leachate will be applied to the working face when it is raining, or when the waste is too wet. Additionally, spray applications should be avoided in windy conditions.

4.5 Other Operational Considerations

Other operational considerations to be considered in recirculating leachate are as follows:

- Removal of Daily/Intermediate Cover Soil: It is recommended that existing daily/intermediate soil be removed as practical before the placement of additional lifts of waste as excess soil in the landfill can lead to preferential flow paths and leachate seeps.

- Decreased Waste Compaction: Consideration should be given to decreasing the compaction effort in the lift or two of waste under planned locations of horizontal injection systems and ponds or near-surface trenches. This will allow greater quantities of leachate to be recirculated as well as a greater dispersion of leachate in these locations.

5.0 FACILITY MONITORING

The facility must be monitored to ensure that the combination of leachate recirculation and natural precipitation does not produce excessive head on the liner system, side slope seeps, or stability problems. This section reviews a monitoring system to be installed in the landfill to monitor both weather and leachate quantities.

5.1 Weather Monitoring

Daily weather monitoring will be obtained using a rain gauge and tell-tale equipped thermometer located at the landfill office. Daily readings would be obtained for the maximum temperature, total rainfall, and general weather conditions. This information would be recorded on the form provided in **Appendix C1**. This data allows an accurate evaluation of the water-balance over time within the waste.

5.2 Leachate Monitoring

Leachate from the landfill gravity drains to the sumps. The pumps placed within the sumps are equipped with level indicators and an alarm if incoming flow exceeds the pump capability. As long as the pumps handle the incoming flow, excessive head acting on the liner system is prevented.

Landfill personnel will pay particular attention to sudden increases in leachate generation during or immediately after recirculation activities. Sudden increases in rate of leachate generation from the facility not accompanied by precipitation indicates that injected leachate is moving through the waste faster than normal. This may imply either saturation of the waste due to over injection of leachate or short circuiting (via voids in the waste) of the waste by a single injection. Both situations require a cessation of injection to the injection location in question and a modification of the injection sequence.

5.3 Monitoring of Side Slopes

Landfill staff will observe side slopes in particular during and just after leachate recirculation to ensure that leachate run-off or seeps are not produced. Should run-off or seeps be observed, the landfill staff will cease recirculation in the vicinity of the run-off or seeps and will consider methods for remediation. Methods include placement of additional soil, berming, and the installation of drains.

6.0 REPORTS

The following reports will be prepared:

- Pre-Operational Report (this document) and
- 120-Day Trial Period Reporting (Progress and Final Reports).

6.1 Pre-Operational Report

The pre-operational report provides sufficient information to justify the 120-day trial recirculation period. This Leachate Recirculation Plan is the pre-operational report for leachate recirculation within Phase 2. Reporting forms proposed in this pre-operational report will be revised with experience.

6.1.1 Weather Monitoring

A daily rain gauge and thermometer will be installed at the landfill office to allow daily recording of total rainfall and maximum temperature. This data will be recorded at the end of each working day.

6.1.2 Baseline Leachate Sampling

Baseline leachate quality data for Phase 2 will be provided within the last 30 days prior to the initiation of leachate recirculation. This data will include test results for BOD, COD, temperature, conductivity, pH, ammonia, suspended solids, metals, and volatiles.

6.1.3 Operational Procedures

The operational procedures during the 120-day trial recirculation period will be the same as for long-term operations as previously described in **Section 4** depending on the method(s) of leachate recirculation used.

6.1.4 Operational Equipment

The operational equipment used during the 120-day trial recirculation period will be the same as for long-term operations as previously described in **Section 4** depending on the method(s) of leachate recirculation used.

6.1.5 Record Keeping

Daily readings for rainfall, maximum temperature, quantity of leachate generated/recirculated, and leachate injection galleries used will be maintained using the form provided in **Appendix C1**. This form provides for a week of data and allows comments on the daily weather conditions and unusual operating conditions, e.g., odor or seeps. These data sheets will be provided to the State as part of the technical report submitted to DWM in support of implementation of the long-term leachate recirculation program.

6.2 120-Day Trial Period Reporting

6.2.1 Progress Report

After a minimum of 60 days, a progress report will be prepared which describes and documents the monitoring activities since initiation of the 120-day trial period, presents observed difficulties and/or operational modifications, and presents leachate quality data. Leachate quality data will include test results for BOD, COD, temperature, conductivity, pH, ammonia, suspended solids, metals, and volatiles.

6.2.2 Final Report

At the completion of the 120-day trial period, a final report will be prepared which describes and documents the monitoring activities for the entire trial period, presents observed difficulties and/or operational modifications, and presents leachate quality data. Leachate quality data will include test results for BOD, COD, temperature, conductivity, pH, ammonia, suspended solids, metals, and volatiles. The most critical aspect of this report is confirmation that the proposed leachate injection sequence results in acceptable performance. Based on this report, Davidson County will request approval by DWM to implement the long-term leachate recirculation program.

TABLE 1: NC DWM POLICY ELEMENTS FOR LEACHATE RECIRCULATION

Conditions	Policy Element	Section(s)
Preoperative Conditions	A rain gauge and thermometer shall be placed on the site.	6.1.1
	A Baseline sampling of leachate shall be performed.	6.1.2
	An outline of expected operational procedures shall be submitted.	4.0
	A brief description of the equipment and its' associated specifications shall be submitted.	4.0 & Specs.
	A brief description of record-keeping forms shall be submitted including: • daily/weekly record of leachate generated • daily/weekly record of leachate recirculated • weather conditions and other pertinent daily information • a log for reporting operating or other unusual problems, and their subsequent rectification • any other forms or procedures, etc., that the owner/operator will use.	5.0/6.0
	An estimation of height of waste in the cell where leachate is anticipated to be applied.	3.0/4.0
	An analysis of the field capacity of the waste where leachate is to be applied, such that the gallons per unit area does not exceed the field capacity of the waste volume.	3.0
Operating Conditions	Records shall be kept or a daily/weekly basis as outlined.	6.0
	No leachate shall be applied on less than one lift (10 feet) of waste.	3.0/4.0/4.2
	No leachate shall be spray applied or surface circulated when it is raining, or when the waste is too wet.	4.4
	No run-off or side seepage will be allowed.	4.5/5.3
	Odors will be controlled.	4.3/4.4
	Leachate depth shall be monitored in the manhole to ensure that the head on the liner does not exceed one foot for more than 24 hours.	5.2
	Leachate will be spray applied or surface circulated during daylight hours only.	4.4
	The application system will be properly maintained and documented.	4.0/5.0/6.0
	Subsurface distribution systems will be outlined.	4.1/4.2/4.3
	Operation and maintenance of subsurface systems will be proposed.	4.1/4.2/4.3

Appendix C1

Reporting Forms and Logs

THIS PAGE INTENTIONALLY LEFT BLANK

DAVIDSON COUNTY MSW LANDFILL - PHASE 2
LEACHATE RECIRCULATION
120-DAY TRIAL PERIOD MONTHLY REPORTING FORM

Start Date (Day 1): _____

Day	Rain (Inch)	Max. Temp.	Leachate Generated	Leachate Recirculated	Injection Location(s) Used	Problems/Weather (Use Extra Sheet if Required)
1						
2						
3						
4						
5						
6						
7						
8						
9						
10						
11						
12						
13						
14						
15						
16						
17						
18						
19						
20						
21						
22						
23						
24						
25						
26						
27						
28						
29						
30						
31						

DAVIDSON COUNTY MSW LANDFILL - PHASE 2
LEACHATE RECIRCULATION
LEACHATE RECIRCULATION MONTHLY REPORTING FORM

Start Date (Day 1): _____

Day	Rain (Inch)	Max. Temp.	Leachate Generated	Leachate Recirculated	Injection Location(s) Used	Problems/Weather (Use Extra Sheet if Required)
1						
2						
3						
4						
5						
6						
7						
8						
9						
10						
11						
12						
13						
14						
15						
16						
17						
18						
19						
20						
21						
22						
23						
24						
25						
26						
27						
28						
29						
30						
31						

DAVIDSON COUNTY MSW LANDFILL - PHASE 2
LEACHATE RECIRCULATION
LEACHATE RECIRCULATION DAILY LOG

Date: _____

Time	Injection Location	Volume Pumped	Remarks

DAVIDSON COUNTY MSW LANDFILL - PHASE 2
LEACHATE RECIRCULATION
INSTALLATION LOG

Injection Device: Horizontal Trench / Horizontal Blanket Drain / Vertical Injection Well / Near-Surface Injection Trench (circle one)

Device ID: _____

Date(s) Installed: _____

Length Installed: _____

Elevation: _____

Number of Holes/Spacing: _____

Hole Size: _____

Coordinates:

Point #: _____ X: _____ Y: _____ Z: _____

Point #: _____ X: _____ Y: _____ Z: _____

Point #: _____ X: _____ Y: _____ Z: _____

Remarks: _____

Installation Sketch:

Appendix D

Mobile Home Deconstruction

THIS PAGE INTENTIONALLY LEFT BLANK

Operations Manual
Appendix D: Mobile Home Deconstruction

Davidson County C&D Landfill
Davidson County, North Carolina

Prepared for:
Davidson County Integrated Solid Waste Management
Thomasville, NC

March 2009

RICHARDSON SMITH GARDNER & ASSOCIATES
Engineering and Geological Services
14 N. Boylan Avenue
Raleigh, North Carolina 27603

THIS PAGE INTENTIONALLY LEFT BLANK

DAVIDSON COUNTY
DAVIDSON COUNTY LANDFILL FACILITY

OPERATIONS MANUAL
APPENDIX D: MOBILE HOME DECONSTRUCTION

1.0 OVERVIEW

This portion of the Operations Manual was prepared for the Mobile Home Deconstruction Area located adjacent to the Davidson County Construction and Demolition Debris (C&D) Landfill unit. The Mobile Home Deconstruction Area is strictly for the deconstruction of mobile homes in order to recycle materials from the mobile homes. Davidson County plans to recycle as many varieties of materials as possible as end users are available. Initially, scrap metal recycling will be conducted. Once an end-user of another material (i.e. glass) is located, these other materials may be recycled. Any non-recyclable material will be disposed of appropriately by the County upon completion of the deconstruction process.

2.0 MOBILE HOME DECONSTRUCTION PROCESS

Mobile homes will be deconstructed using the following processes.

2.1 Access

Mobile home owners seeking disposal will contact the landfill facility and be placed on a waiting list. No more than TWO (2) mobile homes will be allowed on-site for deconstruction at one time. Once space is available for a mobile home, landfill personnel will contact the next owner on the waiting list. The owner will have a 48 hour window in which to contact the landfill facility with information regarding the delivery date and hauler. If owner cannot arrange delivery within this initial 48 hour period, the owner may make alternate arrangements for delivery and must notify the landfill facility a minimum of 48 hours prior to planned delivery. The delivered mobile home will not be weighed on the scales at time of delivery, but the owner will be charged based upon the size and dimensions of the mobile home.

If delivery is not made within 48 hours of the scheduled delivery date, the owners name will be placed on the waiting list and the owner will be notified. If an owner has more than one mobile home, they will be rotated with others on the waiting list.

2.2 Waste Disposal

All mobile homes must be free of garbage, household hazardous waste, and all other non-construction and demolition waste prior to acceptance by the landfill.

2.3 White Goods

White goods will be accepted with the mobile home. White goods will be removed and handled in accordance with all State and Federal regulations. Any white goods containing CFC's will have them managed properly prior to removal of the white goods and deconstruction of the mobile home.

2.4 Asbestos

Since asbestos may be located in the building materials of mobile homes constructed prior to 1983, all mobile homes built before 1/1/1983 will be thoroughly sprayed with water (both interior and exterior) to minimize dust. Upon demolition of a mobile home constructed prior to 1983, the waste generated will be placed in the C&D landfill and covered with six inches of soil or approved alternate cover.

2.5 Deconstruction of Mobile Homes

Once accepted, the mobile home will be placed in the mobile home deconstruction area. Mobile home deconstruction will be dependant upon weather conditions and manpower availability and will ONLY take place in the deconstruction area. Prior to deconstruction, mobile homes constructed before 1983 will be thoroughly sprayed with water to minimize dust (as noted above). The home will then be deconstructed using a track-hoe. The track-hoe will tear the trailer apart and lay the pieces on the ground to be separated by landfill personnel. The personnel will separate the non-recyclable materials from the recyclable materials. Initially, scrap metal is planned for recycling. As other end-users for other materials are available, other materials may be separated for recycling. All material not planned for recycling will be placed in the C&D landfill before the end of the day in which the deconstruction takes place. Material from mobile homes constructed prior to 1983 will be covered prior to the end of the day. All recyclable materials will be stockpiled in the deconstruction area for future recycling. **NO OPEN FLAMES OR CUTTING WITH TORCHES WILL BE ALLOWED WITHIN 100 FEET OF THE C&D LANDFILL.**

2.6 Holding Time for Mobile Homes

All mobile homes must be deconstructed within 45 days from acceptance into the deconstruction area. Upon receipt at the landfill, the date shall be painted on the side or end of the mobile home, or on the frame, for identification purposes for Solid Waste Section personnel.

2.7 Holding Time for Recyclables

Once a recyclable material is removed from a mobile home, it may be stockpiled in the mobile home deconstruction area for up to 45 days. No materials shall be kept in this area for more than 45 days, nor shall they be stockpiled in other areas awaiting recycling.

3.0 RECORD KEEPING PROGRAM

The County shall maintain the following records related to the Mobile Home Deconstruction in an operating record at the landfill (see also **Section 1.11** of the Operations Manual):

A. Mobile Home Acceptance records including dates and description;
B. Owner and hauler information for each mobile home;
C. Date of deconstruction for each mobile home and materials to be recycled;
D. Date and disposal information for all recycled materials ton include location and vendor of recipient of recycled materials.
E. Date and certification of CFC's removed.

THIS PAGE INTENTIONALLY LEFT BLANK

Appendix E

Household Hazardous Waste Plan

THIS PAGE INTENTIONALLY LEFT BLANK

APPROVED
DIVISION OF SOLID WASTE MANAGEMENT
DATE 6/22/01 BY SLC

North Carolina Department of Environment and Natural Resources
Division of Waste Management
Solid Waste Section

APPLICATION FOR A HOUSEHOLD HAZARDOUS WASTE IDENTIFICATION NUMBER

A household hazardous waste I.D. number shall be required to ship collected materials off-site for treatment and/or processing. Please check the appropriate box and fill in the blanks.

Temporary Day [ ] Permanent Site [X]

OPERATOR

City/County DAVIDSON

Contact Person Charles BRUSHWOOD Phone (336) 242-2284

Company Name DAVIDSON COUNTY SOLID WASTE MANAGEMENT

Site Location DAVIDSON County Landfill County DAVIDSON

Contact Persons STEVE SWAIM (336) 242-2856 KARRY BLAYLOCK Phone (336) 242-2289

Mailing Address 220 DAVIDSON County Landfill Rd.
LEXINGTON, NC 27292

TRANSPORTER

Company Name SAFETY-KLEEN (TG) ID No. SCD 987574647

Mailing Address 208 WATLINGTON INDUSTRIAL DRIVE
REIDSVILLE, NC 27320

Contact Person Keith ANDERSON Phone (336) 361-6133

DISPOSER/RECYCLER

Company Name SAFETY-KLEEN (TG), INC. ID No. NCD 000648451

Site Location REIDSVILLE, NORTH CAROLINA

Mailing Address 208 WATLINGTON INDUSTRIAL DRIVE
REIDSVILLE, NC 27320

Contact Person Keith ANDERSON Phone (336) 361-6133

MATERIALS TO BE COLLECTED Various Household HAZARDOUS Materials including paints, cleaners, pesticides, herbicides, aerosols, AUTOMOTIVE PRODUCTS, BATTERIES, WAXES, VARNISHES, COATINGS ETC.

MATERIALS TO BE RECYCLED Paints (REUSE), SOLVENTS (BTU RECYCLING) motor oil, lead Acid Batteries, Ni-CAD BATTERIES, MERCURY

(OVER)

EXPLANATION N/A

For Temporary Day, dates of collection (mo/day/yr) N/A

I certify that the information supplied is accurate and correct to the best of my knowledge and belief; and that this facility will only accept household hazardous waste.

I am authorized to make this request on behalf of the operator at the location given.

Date 6-22-01 Name Charles Brushwood

Company Title Director Signature Charles Brushwood

Purpose: Application for household hazardous waste identification number. This number shall be used to ship collected materials off-site for treatment and/or processing.

Distribution: Mail completed original to the following address:

Division of Waste Management
Solid Waste Section
1646 Mail Service Center
Raleigh, North Carolina 27699-1646
(919) 733-0692

The Solid Waste Section shall assign an identification number upon receipt of application.

***Temporary Day -** Upon completion of a Temporary Collection day, a report on HHW collected, disposed of, and recycled shall be returned to the Solid Waste Section.

***Permanent Site -** An annual report on HHW collected, disposed of, and recycled shall be returned to the Solid Waste Section.

Disposition: This form shall be maintained in accordance with the standards of the Solid Waste Section's Records Disposition Schedule published by the North Carolina Division of Archives and History.

FOR SECTION'S USE ONLY

Date Received 5/15/2001, Revised 6/22/2001

Date Approved 6/22/2001

HHW Number: NC PH02901001

HHW Contractors and Possible Resources

Envirochem
1005 Investment Blvd.
Apex, NC 27502
contact: Jerry Deakle
Ph# (919) 362-9010
Fax# (919) 362-9005
materials: All Major Chemicals
(is not listed under HHW contractors)

Carolina Environmental Associates, Inc.
PO Box 963
Burlington, NC 27217-0963
contact: Michael Griffin
Ph# (336) 229-0058
Fax# (336) 229-0204
materials: All Major Chemicals including HHW

Environmental Recycling Alternatives, Inc.
PO Box 6417
High Point, NC 27262-6417
contact: Greg Meurs
Ph# (336) 869-8785
Fax# (336) 869-4940
materials: Most Major Chemicals
(is not listed under HHW contractor)

Fluid Recovery Company, Inc.
PO Box 1958
Welcome, NC 27374-1958
contact: George Jones
Ph# (336) 228-0692
Fax# (336) 228-0820
materials: Most Major Chemicals
(is not listed under HHW contractors)

Envirocycle, Inc.
PO Box 5367
High Point, NC 27262-5367
contact: Lynn Kak
Ph# (336) 869-8836
Fax# (336) 869-8704
materials: Batteries (all types), Fluorescent bulbs/ballasts
(is not listed under HHW contractors)

IBS Environmental Services, Inc.
PO Box 1263
Lenoir, NC 28645-1263
contact: David Haynes
Ph# (828) 396-4319
Fax# (828) 396-2367
materials: Batteries (all types), Fluorescent bulbs/ballasts
(is not listed under HHW contractors)

Detrex Corporation
3114 Cullman Ave.
Charlotte, NC 28206-2743
contact: Bob Benson
Ph# (704) 372-9280
Fax# (704) 376-0732
materials: Petro Chemicals
(is not listed under HHW contractors)

Energy Recovery Resource, Inc.
215 Speedrail Court
Concord, NC 28025
contact: Rick Martin
Ph# (704) 455-1333
Fax# (704) 455-5138
materials: Petro Chemicals
(is not listed under HHW contractors)

Noble Oil Services, Inc.
5617 Clyde Rhyne Dr.
Sanford, NC 27330
contact: Lee Booher
Ph# (919) 774-8180
Fax# (919) 775-7732
materials: Motor Oil, Petro Chemicals
(is not listed under HHW contractors)

Holston Group, Inc.
PO Box 720
Waynesville, NC 28786-0720
contact: Larry Diggs
Ph# (336) 416-1663
Fax# (828) 452-2838
materials: Motor Oil, Petro Chemicals
(is not listed under HHW contractors)

Century Env. Services & P-3 Inc.
PO Box 410029
Charlotte, NC 28241-0029
contact: Dave Graves
Ph# (704) 588-7426
Fax# (704) 588-7434
materials: Fluorescent bulbs/ballasts

Four Seasons Environmental, Inc.
PO Box 16590
Greensboro, NC 27406-0590
contact: Quint Barefoot
Ph# (336) 273-2718
Fax# (336) 274-5798
materials: Fluorescent bulbs/ballasts
(is not listed under HHW contractors)

AB Environmental Services
3900B US Hwy 29 N.
Greensboro, NC 27405
contact: Al Bouldin
Ph# (800) 801-9874
materials: Most Major Chemicals and HHW

3RC
1401 S. Martin Luther King Dr.
Winston-Salem, NC 27107
contact: Michele Sakwa
Ph# (336) 784-4300
Fax# (336) 784-4905
materials: Most Major Chemicals and HHW
(listed as an HHW contractor)

Safety-Kleen, Inc.
208 Watlington Industrial Rd.
Reidsville, NC 27320
contact: Keith Anderson
Ph# (336) 342-6106
(800) 437-9749
materials: Most Major Chemicals and HHW
(listed as an HHW contractor)

Ecoflo
2750 Patterson St.
Greensboro, NC 27407
contact: Ann Rudd
Ph# (800) 999-6510
Fax# (336) 855-4139
materials: Most Major Chemicals and HHW
(listed as an HHW contractor)

Heritage Environmental Services, Inc.
4132 Pompano Rd.
Charlotte, NC 28216
contact: Larry Eidy
Ph# (704) 392-6276
Fax# (704) 391-4513
materials: Most Major Chemicals and HHW
(listed as an HHW contractor)

Exide Battery Corp.
4101-C Barringer Dr.
Charlotte, NC 28217-1509
contact: Deidre Hill
Ph# (704) 521-9225
Fax# (704) 521-9164
materials: Lead-Acid Batteries
(is not listed under HHW contractors)

Battery Masters, Inc
PO Box 581
Lexington, NC 27293
contact: Lane Livengood
Ph# (336) 472-2100
materials: Lead-Acid Batteries
(is not listed under HHW contractors)

D & M Salvage
PO Box 1292
Linwood, NC 27299
contact: Thomas Lashon
Ph# (336) 798-4781
materials: Propane Tanks
(is not listed under HHW contractors)

Attachment A

Operational Plan for the Davidson County Permanent Household Hazardous Waste Facility

This plan describes the normal operating procedures for Davidson County's permanent Household Hazardous Waste (HHW) Collection Facility. Additional procedures for emergency situations are contained in a separate Contingency Plan.

The Davidson County Permanent HHW Collection Facility is being established as part of a County effort to more effectively manage HHW and to help prevent improper disposal. This comprehensive effort, initiated by Davidson County's Integrated Solid Waste Staff involves a coordinated program of HHW collection, source reduction, and public education. The program is being supported by Davidson County Integrated Solid Waste Department. More information on this County effort and research conducted by staff before choosing a course of action, can be obtained by calling Steve Swaim Recycling Coordinator. He is a member of the Carolina Recycling Association and is also a member of the Association's HHW council.

The Davidson County Permanent HHW Collection facility will be located at the Davidson County Sanitary Landfill Property.

Facility Staffing

The Davidson County permanent HHW Collection Facility will be operated largely through existing County staff. They will primarily be responsible for the identification, collection, bulking, and temporary storage of materials. There will also be contractors that will be used for training, advisory and technical support until our staff is trained, so that we can ensure the facility stays in compliance. Contractors will be used for some over-packing, and the transportation and disposal/recycling of collected materials from the collection site. Local county staff plan to receive appropriate training but will leave most of the waste related tasks to contractor personnel; the primary exception is that the local staff will conduct the weekly inspections described later in this plan. Further information on the facility staffing is provided in a subsequent section entitled Personnel and Duties.

Throughout this plan, personnel from the waste transportation and disposal contractor are referred to as "contractor personnel." In some instances (as necessary for clarity), they are referred to as "onsite" contractor personnel, to distinguish them from other contractor employees.

User Eligibility

The Davidson County permanent HHW Collection Facility is intended to serve the residents who live within Davidson County. Records will be kept on wastes, and these records will contain information on the types of quantities of wastes, their origin, and the decision regarding acceptance or rejection.

. Only household hazardous wastes are currently planned for acceptance at the facility. Businesses needing to dispose of hazardous wastes will be referred to vendors who offer "milk run" programs for picking up wastes at business locations. The County, at its option, may offer limited Conditionally Exempt Small Quantity Generator (CESQG) disposal at an appropriate charge to these businesses.

Each time the collection facility is open, local staff representatives will be present to help direct traffic, check for proof of residency, may conduct a brief survey, and provide educational materials, as they are available. The survey will be designed to determine the types, quantities, and sources of each user's wastes and questions may also be added to solicit user comments on program features such as convenience and publicity. The educational material that may be offered to users will include information on less hazardous alternative products and other HHW topics.

Collection and Screening of Wastes

Once eligibility has been established as described above, the users will be directed to proceed to the waste removal area or form a waiting line if needed. Local staff representatives will direct the flow of traffic to ensure safe and efficient operations. The user at the front of the line will be directed to drive into the receiving area, where wastes can be safely removed from the vehicle. Trained County personnel or County's contracted representatives will check the wastes and remove them from the vehicle. The occupants of the vehicle will be asked to remain in the vehicle; if it is necessary to unlock the trunk for removal of wastes, Staff personnel will request the keys and accomplish this task. Properly trained personnel will maintain safe operations by immediately dealing with any leaking damaged, unlabelled, or potentially shock sensitive or explosive materials.

The public education effort planned for this facility will inform potential users that the collection facility is designed to handle HHW from the following general categories: 1) yard and garden products; 2) automotive products; 3) paints and solvents; 4) household cleaning products; and 5) miscellaneous HHW. Because of difficulties in handling a few specific types of wastes (including explosives, radioactive materials, biologically active or infectious waste.), the educational effort will actively discourage users from bringing these and any other materials not accepted by the program. However, in the event that a misinformed resident brings such wastes to the facility, staff or its contractor will consider taking the wastes to avoid improper disposal or recommend a licensed facility where it may be sent.

The decision regarding these wastes will be based upon risk assessment as well as the specific details of each case and also any advice from the staff or available contractor personnel. As necessary, the transportation and disposal contractor will help find specialized vendors to remove any such wastes for treatment or disposal. Whenever wastes are rejected, the user will be given a waste rejection notice showing the reasons for non-acceptance and providing names of people to contact for further information concerning options for proper disposal.

Wastes Identification and packaging

As the wastes are received, trained personnel will perform initial waste identification and segregation. Some materials that can be managed by local government representatives (such as latex paint, motor oil, and other automotive fluids, and lead-acid and button batteries) may be segregated from hazardous wastes at this time and handled according to local government protocols.

The Davidson County HHW Facility **will not accept unknown waste at this time.** If the generator **can identify** the item and/or items in question, then and only then will the facility accept the item. For example; unlabeled paint cans, unlabeled pesticide containers, unlabeled automotive product containers etc.

Trained staff personnel or contractor will conduct or directly supervise the collection, packaging, storage, and document preparation of the household hazardous wastes collected at the facility. The contractor will arrange the transportation, treatment, recycling, or disposal of these wastes. Many will probably require lab packing. Lab packing of materials may occur on the same day as collection activities, provided that time is available and adequate quantities of compatible materials are received. Otherwise, materials will be safely stored until the next scheduled workday. Additionally, partially filled (packed) containers may remain on-site until adequate amounts are collected and properly packaged for transport.

If pumping, pouring, or bulking of wastes are required, grounding and explosion-proof equipment will be used as needed. For both lab packs and bulk packaging, all containers will be of Department of Transportation (DOT) specification, type, and size most appropriate for the specific waste type and planned treatment or disposal method. Wastes will be packed in fiber, plastic, or steel containers of open or closed-head types, ranging from 5 gallon pails to one cubic yard boxes or as contractor feels safe.

For any necessary lab packing, wastes will first be segregated according to DOT hazard class, then by chemical compatibility and by the acceptance criteria of specific waste recycling, treatment, or disposal facilities. An absorbent material such as vermiculite of Silk-wik will be used to surround inner containers, prevent breakage, absorb any leaking materials, and prevent release from outer (shipping) container. Each inner container will be recorded on container content forms, providing a complete report of the contents of any container.

Whether lab pack or bulk, the filled drums will be closed, labeled, and marked in accordance with DOT and Environmental Protection Agency (EPA) shipping requirements, and the proper information will be recorded on the manifest. The generator's notification and certification will also be prepared, as required under the land-ban regulations if applicable.

Accumulation Time

The storage building at the Davidson County Permanent HHW Collection Facility will be designed to store temporary accumulations of several classes of household hazardous materials. Local staff representatives will be trained as appropriate concerning proper waste segregation and safe storage procedures.

In accordance with state requirements for temporary storage, the date upon which each period of accumulation begins will be clearly marked and visible on each container. Additionally, a complete inventory log of materials will be kept on site. Furthermore, while being stored on-site, all containers with stored household hazardous wastes will be labeled or marked clearly with the words, "Household Hazardous Waste", unless the material is recyclable (e.g. used oil, latex paints, batteries) and is separated from other waste.

Time in storage may vary according to the volume of waste received. Removal of wastes by the contractor will be scheduled as necessary to minimize expense to the local government while still complying with applicable regulations and safety considerations. Wastes will be stored no longer than one (1) year without written permission from the North Carolina DEHR Division of Solid Waste Management.

Storage Building Specifications

The Davidson County Permanent HHW Collection Facility will be designed and constructed to ensure safe and efficient operation. According to state guidance concerning storage of ignitable and reactive wastes, the structure will be located at least 50 feet from the facility's property line. Furthermore, the storage building will be separated from other operational areas of the solid waste facility in order to minimize damage in case of fire.

As required for proper safety and environmental protection, the structure will be: 1) designed to contain leaks and spills; 2) covered to exclude rain water; 3) secured to control access; and 4) constructed in accordance with all applicable National Fire Protection Association codes.

The HHW collection facility will consist of a single storage building. Floor plan and elevation are attached. Although building features may be altered as the engineering work progresses, preliminary facility specifications are noted on the enclosed drawings.

Access Control and Security

Access to the facility and chemical-handling areas will be controlled to prevent unnecessary public exposure to potential harmful substances. Areas where chemicals are handled or stored will be clearly marked using one or more of the following: warning tape barriers, and caution signs. The signs will contain appropriate warning such as 'No Smoking" and "Authorized Personnel Only". In addition, during collection times, staff representatives will be stationed in strategic locations and will serve as checkpoint personnel to direct the flow of traffic and people.

The HHW storage building will be secured after hours of operation against unauthorized access by locked doors and is located with in the Davidson County's Sub Title "D" Facility that is secured by fence, locked gates, dike, berm, and other devices, such as, security video and lights that automatically activate at sun down.

Hours of Operation

The HHW Permanent Collection Facility will be open for collection from 8:00am. until 4:00pm and no more than Tuesday through Saturday. If there is a need to increase the NC DEHNR Division of Solid Waste Management will be notified in writing.

Personnel and Duties

The HHW Permanent Collection Facility will be staffed with well-trained qualified personnel under the leadership of a experienced contractor (until Davidson County has its own experienced staff) that will be contracted by Davidson County. The duties of this contractor and/or the County's own experienced staff are described below.

- Assuring that all onsite staff representatives and contracted personnel have met the training requirements appropriate for their duties;
- Assuring that all onsite staff representatives and contracted personnel are aware of provisions of the Contingency Plan;
- Assuring that all onsite staff representatives and contracted personnel are aware of the potential hazards associated with site operations;
- Assuring that appropriate personal protective equipment is available and properly used, (i.e. full face respirators with an annual fit test, gloves, tyvek suits and aprons);

- Monitoring and safety performance of onsite staff representatives and contracted personnel;
- Correcting any work practices or conditions that may result in injury or exposure to household hazardous substances;
- Preparing any accident/incident reports;
- Implementing all aspects of the staff and contractor's Injury and Illness Prevention Program as applicable to project site;
- Verifying that onsite staff representatives and contracted personnel work in a safe manner according to the health and safety plan;
- Establishing guidelines for wearing and decontaminating (if necessary) personnel protective equipment;
- Observing onsite staff representatives and contracted personnel for signs of exposure or stress;
- Immediately reporting any unusual or unsafe conditions to person in charge;
- Informing onsite staff representatives and contracted personnel of the proper procedure during an emergency;
- Providing first aid if necessary;
- Identifying any onsite staff representatives and contracted personnel having special medical problems;
- Ensuring that any necessary monitoring equipment is properly maintained and good operating order;

Local staff representatives and/or contracted personnel will be responsible for opening the site before each collection event and securing the site at the end of each event. They will be responsible for the safe removal of acceptable materials from residents, and temporary storage of materials, segregation and packaging of those materials, and the temporary storage of materials for pick up by the contractor. As mentioned previously, local staff representatives will also direct traffic, conduct surveys, determine eligibility, and distribute educational materials. Another primary waste-related task that local staff representatives and/or contracted personnel plan to perform is weekly inspections. Contracted personnel will perform these inspections until the local staff representatives have received appropriate training. **All County personnel shall work from the Awareness Level only. This could change to move to a more aggressive role as required training allows.**

Training Plan and Qualifications of Trainers

The contractor will be responsible for training all local staff representatives and contracted personnel. Both Davidson County and the contractor's training programs are designed to enable appropriately trained personnel to receive and handle wastes in a safe, environmentally sound manner and to work in compliance with the contractor's methods and applicable regulations. Appropriate government and contractor personnel assigned to this project will complete the appropriate health and safety training in accordance with the Occupational Safety and Health Administration standard in 29 CFR 1910.120(e).

All onsite contractor and appropriate government personnel will have received a minimum of 24 hours of classroom training experience under the direct supervision of a trained, experienced supervisor.

Local staff representatives will be trained using the same high standards applied to the training of the contracted personnel. Accordingly, the contracted management will supervise the training program. These individuals will have the following qualifications: 1) high school diploma or equivalent (GED); 2) direct experience in handling of hazardous wastes; 3) certification as an environmental trainer; and 4) skills in adult education. This combination of education, experience, and skills is fully appropriate for directing the training of the local staff representatives.

The training program for local staff representatives will be well documented and this record will be on site. Training topics described below.

- Chemical Hazards/Toxicology;
- Spill Management;
- Use of Fire extinguishers;
- Emergency Equipment;
- Decontamination;
- General Safe Work Practices:
- Accident prevention:
- Personal Protective Equipment for HHW Handlers;
- **Contingency Plan Implementation**:
- Weekly Inspection of Storage Containers;
- Weekly Inspections of Operation/Emergency Equipment;
- DOT Standards for Household Hazardous Materials;
- Identification of DOT Chemical Hazard Classes;
- Containerization of Household Hazardous Materials
- Labeling;
- Marking:
- EPS Standards for Household Hazardous Wastes;
- Storage;
- Disposal;
- Record-keeping;
- Chemical Segregation;
- Consolidation of Materials into Single Container (bulking);
- Container Contents Sheets and Other Forms;
- Using buddy system for Bulking

Local staff representatives will not work unsupervised until they have received appropriate training. Onsite contracted personnel and local staff representatives will be required to take part in an annual review of the initial training for the tasks they are performing and any emergency response, which may apply, to those tasks.

As required, complete training records for the local staff representatives (along with job description, job title, and other pertinent information) will be kept at the facility; training records for onsite contracted personnel will be kept at onsite office.

Provisions for ignitable, reactive, or Incompatible Wastes

Staff and contracted personnel will use special precautions to protect ignitable or reactive wastes from sources of ignition or reaction. These wastes will be separated from other wastes being stored in the collection facility. Any ignitable or reactive wastes will be protected from possible sources of ignition or reaction, including but not limited to: open flames, hot surfaces, frictional or radiant heat, and spontaneous ignition (e.g., from heat-producing chemical reactions). Any tools used for equipment maintenance in areas containing ignitable wastes will be of a non-sparking type. Maintenance activities such as welding or cutting, which potentially could generate sparks or open flame, will be allowed only by special permission of the contractor's Project Supervisor or designee. This permission will be granted only after the area has been inspected and tested for flammable vapors, and all ignitable or reactive materials have been removed or protected. Policy will prohibit smoking or open flame within or near storage building. "No Smoking" signs will be placed at the entrance to unloading and storage areas and will be conspicuously placed wherever there is a direct hazard from ignitable or reactive wastes. Areas in which ignitable materials are stored will require the use of explosion-proof equipment and lighting. Proper grounding will be maintained in order to dissipate any accumulation of static charges generated by the movement of household hazardous liquids in pouring or bulking operations.

Regarding incompatible wastes, the following special provisions apply;

- Incompatible wastes will not be placed in the same container;
- Household hazardous wastes will only be placed in new, unused containers or in containers cleaned and reconditioned by a licensed manufacturer (and labeled as such);
- A storage container holding a household hazardous waste that is incompatible with any waste or other materials stored in close proximity will be separated from them by containment structures such as built-curbs or will have secondary containment such as drip pans constructed of steel or polyethylene.;

  As a general rule, the handling and storage of all household hazardous wastes (especially any that are ignitable, reactive, or incompatible) will be conducted so that it does not:

  - Generate extreme heat or pressure, fire or explosion, or violent reaction;
  - Produce uncontrolled toxic mists, fumes, dusts, or gases in sufficient quantities to threaten human health;
  - Produce uncontrolled flammable fumes or gases in sufficient quantities to pose a risk of fire or explosions;

Damage the structural integrity of the device or facility containing the wastes;
- Threaten human health or the environment.

The procedures to comply with these provisions depend upon: 1) proper identification of waste materials as they are received; 2) segregated storage according to compatible hazard class; and 3) no co-mingling, bulking, or combining of incompatible hazard classes. The contractor and other appropriate technical publications will provide guidance.

Operational/Emergency Equipment and Personal Protection Equipment

The HHW collection facility will contain the necessary equipment for protecting contracted personnel and local staff representatives. The facility will also contain the equipment needed to implement the contingency plan. The facility will be equipped with an immediately available two/way radio from which emergency assistance could be summoned. Internal communications will be carried out by voice as the most practical method given the restricted size of the facility. A hand-held, pressurized air horn will also be available to signal an emergency situation.

Other equipment to be kept at the facility will include portable ABC dry chemical fire extinguishers, spill control equipment including clay and/or inert absorbents, pads, shovels, brooms, containers, and various commercial decontamination solutions.

All facility communications or alarm systems, fire protection equipment, spill control equipment, and decontamination equipment will be inspected weekly and maintained as necessary to ensure its presence and proper operation in case of emergency. Fire protection equipment will be tested according to manufacturer specifications. Results of all inspections will be recorded on a customized checklist that will include inspection dates and a list of all systems and equipment to be inspected.

Personal Protection Equipment (PPE) will be used as appropriate to protect contracted personnel and local staff representatives from spills, broken containers, and sharp objects. The level of PPE required for particular tasks is described in the following examples:

<u>Persons Removing Waste from Cars – level II *:</u>
- Chemical resistant (polyethylene-coated type) apron, lab coat and or Tyvek suit;
- Safety glasses with shields;
- Chemical-resistant gloves with outer leather or puncture-resistant gloves (optional);
- Safety shoes;

*Depending on the substances being handled, a high level of PPE (including respirators and goggles or face shield) might be required.

Persons Opening Containers and Bulking Waste – level II:

- Chemical-resistant coveralls;
- Full-face shield;
- Safety glasses;
- Polyurethane or other chemical-resistant safety boots;
- Respirator with organic vapor cartridge and high-efficiency particulate air filter if necessary (as determined according to the waste being handled and annual fit testing);
- Chemical-resistant inner glove and outer puncture-resistant glove.

Persons Segregating Waste from Vehicles – level I;

- Safety glasses (with splash goggles or full face shield when necessary);
- White tyvek and/or vinyl apron (as needed);
- Chemical-resistant safety shoes/boots;
- Respirator (as required - along with annual fit tests);
- Chemical-resistant inner glove and puncture-resistant outer glove.

Persons Sampling HHW – level II;

- Full-face shield and safety glasses;
- Chemical-resistant coveralls;
- Chemical-resistant safety shoes/boots;
- Respirator (as required - along with annual fit tests);
- Chemical-resistant inner glove and outer puncture-resistant glove.

Persons Lab Packing HHW – level I or II;

- Safety glasses (with goggles or full-face shield when necessary);
- White Tyvek with vinyl apron or chemical-resistant coverall;
- Chemical-resistant safety boot;
- Respirator (as required - along with annual fit tests);
- Chemical-resistant inner glove and puncture-resistant outer glove.

{Note: contracted personnel (or appropriately trained local staff representatives) handling or moving drums may require metatarsal safety shoes. Regular safety shoes may be substituted for chemical-resistant safety shoes when no chemical exposure hazard exists.}

Use and Management of Containers

Appropriate containers fitting DOT specifications will always be used for storing wastes at the Davidson County Permanent HHW Collection Facility. Contractor personnel preparing wastes for storage will only use containers that are compatible with the wastes to be stored in them, so that containment ability is not impaired.

All containers holding stored HHW will be checked at least weekly to ensure that they haven't been stored more than one (1) year and also to ensure their integrity.
These inspections, to be conducted by contracted personnel (or appropriately trained local staff representatives), will be used to detect any leaks or deterioration caused by corrosion or other factors. Results of these inspections will be recorded. If a container holding household hazardous waste is found in poor condition or if it begins to leak, contracted personnel (or appropriately trained local staff representatives) will transfer the wastes from the defective container to one that is in good condition or will overpack the container in a suitable storage drum.

Contracted personnel (or appropriately local staff representatives) will ensure that any containers holding household hazardous waste will be kept closed during storage, except when necessary to add or remove waste. Caution will be taken in the movement of all containers to prevent them from being tipped over or punctured. Furthermore, the containers will not be opened, handled, or stored in a manner which may rupture them to leak.

Unobstructed aisle space will be maintained to allow movement of personnel, containers, and emergency equipment within the storage building at all times.

Recycling of Waste

HHW collected at this facility will be recycled or treated whenever economically practical, and incineration or landfilling will be used as a last resort. In keeping with this operating philosophy, it is currently anticipated that the following wastes might be collected for recycling or BTU recovery: motor oil and other automotive fluids, lead-acid batteries, nickel-cadmium batteries, latex paint, fuels and solvents, mercury (from florescent bulbs and other sources) , and aerosol cans.

Transportation and Disposal

When the transportation and disposal contractor arrives at the HHW storage facility for a scheduled pickup, the contractor will ensure that all containers are properly packaged, labeled, documented, and manifested. Contractor personnel will then load the containers onto a contractor vehicle contractor vehicle and will transport them to a licensed facility for final treatment, recycling, or disposal.

Reporting and Documentation

Thorough and accurate records will be maintained to ensure the accurate tracking of household hazardous materials from the generator to final disposal sites. Container Contents Sheets will detail each drum's contents and waste quantities.

Additional records that will be generated to ensure accurate record keeping include the following:

- Drum Tracking Sheet (contractor's in-house form);
- Non-Regulated Manifest;
- Contractor's Material Profile Sheet (for wastes in bulk, 5 gallons or more);
- Waste Certification/Notification (to meet requirements of land-ban requirements if applicable);
- TC Rule Certification/Re-certification (to meet the TCLP Rule requirements if applicable)
- Certificates of Disposal.

Maintenance and Operation of the Facility

The HHW collection facility will be maintained and operated to promote personnel safety and to minimize the possibility of a fire, explosion, or any unplanned sudden or non-sudden release of household hazardous waste or household hazardous waste constituents to air, soil, or surface water which could threaten human health or the environment. The appropriate provisions and procedures necessary to ensure safe and efficient operations have been stated in this plan.

Policy for Dealing with Unacceptable Waste

Radioactive Waste

Smoke detectors are the most likely household waste to contain radioactivity. Residents will be advised by staff employees to mail the used smoke detector back to the manufacturers if they are still in business. If the company is no longer in business, then the Nuclear Regulatory Commission recommends landfilling the smoke detector in a municipal solid waste landfill.

Other household wastes are unlikely to have any measurable radioactivity except status eliminators from record players which have a very short life. The Radiation Protection Office of University of North Carolina recommends landfilling these when they become unusable.

Explosives

If explosives are delivered to the facility, the first step will be to immediately access the possible danger and close the site if necessary until these materials are removed. The N.C. SBI will be called with any small arms ammunition including rifle, shotgun, and handgun. For any military type explosives, the SBI and Explosives Division at Fort Bragg will be notified. If the explosive material is not military in nature then Fort Bragg will not handle it.

Infectious Waste

The County will receive sharps if they are packaged in approved collection boxes, and Davidson County will contract with a licensed medical waste transporter for collection and disposal at an approved facility.

Closure

Upon closure of the Facility, Davidson County will remove all household hazardous waste and any residues. The County will also remove all containers used for storage, equipment used during the operations of the Facility, and manage appropriately.

THIS PAGE INTENTIONALLY LEFT BLANK

Attachment B

Contingency Plan for the Davidson County Permanent Household Hazardous Waste Collection Facility

Responsible Agency: Davidson County Integrated Solid Waste Management
220 Davidson County Landfill Road
Lexington, North Carolina 27292

Facility Address: Davidson County Landfill
220 Davidson County Landfill Road
Lexington, North Carolina 27292

Emergency Coordinators (listed in the order they should be contacted):

Primary Contacts: Charles Brushwood – Solid Waste Management Director
220 Davidson County Landfill Road
Lexington, North Carolina 27292
Office phone: (336) 242-2284 Cell phone: (336) 240-3910

Karry "Country" Blaylock – Landfill Supervisor
220 Davidson County Landfill Road
Lexington, North Carolina 27292
Office phone: (336) 242-2289 Cell phone: (336) 240-4253

Steve Swaim – Recycling Coordinator
220 Davidson County Landfill Road
Lexington, North Carolina 27292
Office phone: (336) 242-2856 Cell Phone: (336) 240-3911

Secondary Contacts: Del Welch – Director of Emergency Management Services
PO Box 923
Lexington, North Carolina 27293
Office phone: (336) 242-2270 Cell phone: (336) 240-3907

Perry Tyler – Davidson County Fire Marshall
301 E. Center Street
Lexington, North Carolina 27292
Office phone: (336) 242-2281 Cell phone: (336) 240-3440

Additional Contacts: Hugh Jernigan – Waste management Specialist
Division of Waste Management/ Solid Waste Division
585 Waughtown Street
Winston-Salem, North Carolina 27107
Office phone: (336) 771-4608 ext. 206

Additional Contacts cont. Keith Anderson – Operations Manager (Contractor)
Safety-Kleen (TS), Inc.
208 Watlington Industrial Dr. Reidsville, NC 27320
(800) 437-9749

Special Agent – Peter Ware, State Bureau of Investigation
Raleigh, North Carolina (919) 662-4500

Contingency Plan Purpose and Implementation

This plan is designed to minimize hazards to human health and the environment from fires, explosions, or any unplanned, sudden or non-sudden release of hazardous constituents to air, soil, or surface water. The provisions of this plan will be carried out **immediately** whenever there is an emergency at the facility.

Contingency Plan Contents

This plan contains emergency procedures for four types of incidents: spills, fires, explosions and non-project-related disasters (as defined below).

- A spill is an unintentional release of materials in a quantity that is sufficient to cause environmental or personal harm.
- A fire is the ignition or conflagration of either waste materials or paper and wood trash.
- An explosion is a sudden detonation of waste materials
- Non-project-related disasters include unlikely events such as tornadoes, earthquakes, floods, or bomb threats.

Facility Staffing and Emergency Responsibilities

The Davidson County Permanent HHW Collection Facility will be operated during the first year or initial contract period by a licensed HHW Contractor/ Hazardous Waste Disposal Firm. The contractor will be chosen through a Bid Proposal Process and will be responsible for training Solid Waste Management personnel in all required and appropriate household hazardous waste facility operational procedures during the initial contract period (one year). At that point, the contractor and Solid Waste Management Officials will make a determination, as to whether Solid Waste Management personnel have been adequately trained to take over management operations of the facility. After the initial contract period, a licensed contractor will be used for transport, disposal/recycling of materials, and some over-packing. In the event of an emergency, all appropriately trained personnel who are available (possibly including both contractor personnel and Solid Waste Management personnel) would participate in the response as directed by the designated Emergency Coordinator. Accordingly, throughout the remainder of this plan, the term "personnel" will be used to refer to appropriately trained representatives of both groups.

Arrangements with Local Authorities

Solid Waste Management Officials will make arrangements to familiarize local authorities with all pertinent aspects of the facility and its operations. In Davidson County, primary emergency authority is assigned to Davidson County Emergency Management Services, with other

agencies in supporting roles. The responsible agency will therefore work with this Emergency Management office to ensure that all appropriate local authorities are properly prepared.

Contingency Plan Revisions

This contingency plan will be kept at the facility and will also be distributed to local authorities (as described above). The contingency plan will immediately be revised whenever:

a) The plan fails in an emergency;
b) There are significant changes in facility design, construction, operation, or maintenance;
c) The list of emergency contacts is changed;
d) The list of emergency equipment is changed.

Emergency Response Materials and Equipment

A variety of emergency response materials and equipment will be kept at the facility. These materials will include some or all of the following, as deemed necessary by the Regional Coordinator or Project Supervisor for this facility: spill control equipment (described in a subsequent section), decontamination solutions, fire extinguishers, personal protective equipment, self-contained breathing apparatus, emergency eyewash station, and first aid kit.

Designation of Emergency Coordinator

At the time of an emergency, there will be at least one local government representative either on the facility premises or on call with the responsibility for coordinating all emergency response measures. This coordinator will be familiar with all aspects of the facility's contingency plan, all operations and activities at the facility, local and characteristics of wastes to be handled, location of all facility records, and facility layout. In addition, this person will have the authority to commit the resources needed to implement the contingency plan. The emergency coordinator will coordinate all emergency responses with the contractor's Project Supervisor or designee and will supervise the implementation of emergency procedures described in the following sections of this plan.

Spill Response Equipment and Procedures

Normal spill prevention techniques will be used at the facility, and standard spill control equipment will be available. This equipment will include some or all of the following: bulk absorbents, over-pack drums, absorbent booms or pillows, polyethylene liners, containers for contaminated absorbent, non-sparking tools, and decontamination products. All County Personnel will work from the Awareness Level only at first. This could change to a more aggressive role as required training would allow. In the event that a release occurs, the following procedures will be used:

1) The individual who notices the spill will alert other personnel by voice or three blasts of an air horn.
2) All personnel will stop work and secure their areas of responsibility.

3) The emergency coordinator will direct all public participants to a safe area if necessary.

4) The emergency coordinator will identify the characteristics, exact source, amount, and real extent of any released materials. The coordinator will assess the possible hazards to human health and the environment, considering both direct and indirect effects (e.g., the effects of any toxic, irritating or asphyxiating gases that are generated, or the effects of any hazardous surface-water runoff from water or any chemical agents used). The emergency coordinator will also determine the proper protective equipment needed and will monitor for leaks, pressure buildup, gas generation, or ruptures in equipment as appropriate.

5) If the release is serious enough to affect human health or the environment outside of the facility, the emergency coordinator will immediately contact local authorities and will also notify the National Response Center or the government official designated as the on-scene coordinator for the area. This report will include: name and telephone number of the reporter; name, address, and telephone number of the responsible agency; name, address, and telephone number of the facility; date and time of the incident; type of incident; name and quantities of materials involved; extent of injuries; and possible hazards to human health and the environment.

6) Personnel will be assigned to control the spill and prevent its spread or other complications. If necessary, personnel can be assigned to isolate storm drains and sewers. Personnel will don their protective equipment and take the appropriate steps for cleaning up the spill. Any incompatible materials located near the spill will be removed. A fire watch will be established and the local fire department will be notified. Reasonable measures will be taken to ensure that the problem does not recur or spread to other wastes.

7) If the emergency coordinator determines that outside assistance is needed, then appropriate calls will be made using the emergency phone list.

8) Once the spill is contained and cleaned up, any response equipment used will be decontaminated, inspected, and put back in service when returned to an acceptable condition.

9) If the emergency coordinator determines that a significant amount of wastes escaped from the facility's secondary containment structures, the facility's transportation and disposal contractor will take soil and/or surface-water samples to determine the extent of contamination of the area and possible remedial action.

10) The affected areas of the facility will not be placed in operation again until the responsible agency listed at the beginning of this plan has notified the appropriate authorities that the facility is once again functional.

11) The responsible agency will make a report of the incident in the operating record and will also notify the NC DENR's Division of Solid Waste Management/Solid Waste Section within 24 hours. A written report will be filed with the Division within 15 days, and it should include all of the information in item (5) above, plus the estimated quantity and disposition of recovered material from the incident.

Fire/Explosion Response Procedures

Emergency procedures to be used in the event of a fire or explosion are as follows:

1)The individual who notices the fire or explosion will alert other personnel by voice or a long blast (at least 10 seconds) from an air horn.

2) All personnel will stop work and secure their areas of responsibility.

3) The emergency coordinator will alert the local fire department and will move public participants to a secure location.

4) Personnel will be assigned to contain and halt the fire unless an explosion is possible (in which case the emergency coordinator will call for evacuation). If the fire is chemical in nature or spreads to the chemical waste, personnel will don positive pressure self-contained breathing apparatus. Personnel will fight the fire using fire extinguishers and/or soil and absorbents. Water will generally not be used if the fire is due to the ignition of a flammable liquid, because the water spray could cause spattering or allow the liquid to spread.

5) If the fire goes beyond the incipient stage and cannot be controlled with extinguishers, the emergency coordinator will notify appropriate authorities and prepare to evacuate the work area. Personnel will assist local responders when necessary. Such assistance may include helping to evacuate local residents; blocking off storm drains and berming water sources; removing all unnecessary personnel and vehicles from the area; and removing waste material if possible.

6) If the fire or explosion is serious enough to affect human health or the environment outside of the facility, the emergency coordinator will immediately contact local authorities and will also notify the National Response Center or the government official designated as the on-scene coordinator for the area. This report will include: name and telephone number of the reporter; name, address, and telephone number of the responsible agency; name, address, and telephone number of the facility; date and time of the incident; type of incident; name and quantities of materials involved; extent of injuries, and possible hazards to human health and the environment.

7) Once the fire has been extinguished, then cleanup of the area will commence. During cleanup activities, the emergency coordinator will monitor for leaks, pressure buildup, gas generation, or ruptures in equipment as appropriate. If the fire was chemical in origin or spread to the waste area, all potentially contaminated cleanup materials will be disposed of as waste.

8) Further response to a fire will proceed according to steps 8 through 11 described under the preceding spill response section of this contingency plan.

Procedures for Non-Project-Related Disasters

In the unlikely event of disasters such as floods, tornadoes, earthquakes, and bomb threats, the following procedures will be used:

1) The individual noticing the situation will notify other personnel by voice or long blast (at least 10 seconds) of an air horn.

2) All personnel will stop work and secure their areas of responsibility.

3) The emergency coordinator will alert the appropriate authorities and move personnel to a secure location. The affected area will be secured to prevent access.

4) If necessary, further procedures will be determined and implemented when appropriate, given the specific nature of the emergency.

Evacuation Plans

Whenever there is an emergency incident at the facility, the emergency coordinator will decide if evacuation is necessary. In making this decision, the emergency coordinator will consider various factors, including the following: a) potential for the fire and/or explosion to intensify or spread; b) potential for release of toxic fumes; and c) quantity of released material;

If evacuation of the facility is necessary, personnel will be immediately notified by voice or air horn. The following procedures will then be implemented:

1) All personnel will leave the facility as quickly as possible through the nearest exit and proceed directly to a designated assembly area at a safe distance from the facility. All site personnel will be accounted for. If any personnel are missing, attempts to find them will be made as long as it does not involve endangering the lives of others. No personnel or vehicles will be allowed to re-enter the facility unless specifically authorized by the emergency coordinator. Normally, the only persons allowed to re-enter will be the emergency response personnel.

2) After the emergency is over, re-entry will not be allowed until the emergency coordinator has determined that the facility is safe and has given appropriate notification to personnel.

3) Drills will periodically be held to practice these evacuation procedures and will be treated with the same seriousness as an actual emergency.

Appendix F

Leachate Release Prevention Plan

THIS PAGE INTENTIONALLY LEFT BLANK

LEACHATE RELEASE PREVENTION PLAN

Davidson County Municipal Solid Waste Landfill –
Phase 2
Thomasville, North Carolina
(NC Solid Waste Permit Number 29-06)

Prepared For:

Davidson County Solid Waste Landfill
Thomasville, North Carolina

July 2009

RICHARDSON SMITH GARDNER
& ASSOCIATES
ENGINEERING & GEOLOGICAL
SERVICES

THIS PAGE INTENTIONALLY LEFT BLANK

Table of Contents
Davidson County Municipal Landfill – Phase 2
Leachate Release Prevention Plan

1.0 DISCHARGE PREVENTION 1
1.1 Compliance with Applicable Requirements 1
1.2 Facility Layout Diagram 1
1.3 Potential Discharge Direction of Flow 1
1.4 Containment and Diversionary Structures 1
1.5 Weekly Inspections and Records 1
1.6 Personnel, Training, and Discharge Prevention Procedures 2

2.0 DISCHARGE RESPONSE 2
2.1 Spill Reporting 3
2.2 Spill Remediation 3
2.3 Waste Disposal 3
2.4 Spill Investigation and Documentation 3

Figures

Figure 1 – Existing Conditions

Appendices

Appendix A – Storm Water Evaluation Form for Discharge

Appendix B – Weekly Leachate Tank Area Inspection Form

Appendix C – Training Record

Appendix D – Emergency Contacts

THIS PAGE INTENTIONALLY LEFT BLANK

1.0 DISCHARGE PREVENTION

The following measures are implemented to prevent leachate discharges during the handling, use, or transfer of leachate at the facility. Employees that handle leachate have received training in the proper implementation of these measures.

1.1 Compliance with Applicable Requirements

The aboveground leachate storage tank and operating equipment associated with the Phase 2 landfill are visually inspected weekly for spills, leaks and integrity. Any noted deficiencies are addressed by landfill personnel.

1.2 Facility Layout Diagram

Figure 1 shows the layout of the facility, the location of the leachate storage tank, and proximity to the nearest waterways.

1.3 Potential Discharge Direction of Flow

Drainage from the leachate storage area generally flows to Rock Dam B, approximately 150 feet northwest of the leachate storage area and discharges to the north through approximately ¼ mile of wooded area to Rich Fork Creek.

In the event of an uncontrolled discharge, some storage is provided immediately upslope of Rock Dam B; thus allowing for mitigation. Additional dikes will be created in the event of a release to minimize migration.

1.4 Containment and Diversionary Structures

The primary leachate storage tank is located within a larger diameter secondary containment tank. This containment tank is equipped with a drain valve that is normally locked in the closed position (located outside the secondary tank adjacent to the northern sump). The drain valve is located to allow for the drainage of trapped storm water in the northern portion of the secondary containment. For stormwater in the southern portion of the secondary containment, a sump is located in the floor of the secondary containment where a pump to remove storm water may be placed. Accumulated water in the secondary containment tank will be removed following the procedures in **Appendix A**.

1.5 Weekly Inspections and Records

The checklist provided in **Appendix B** is used for weekly inspections by Davidson County Landfill personnel. The weekly inspections cover the following key elements:

- Observing the exterior of aboveground storage tanks, piping, and other equipment for signs of deterioration, leaks, corrosion, and thinning.

All problems or potential issues regarding tanks and maintenance equipment must immediately be reported to the Director and/or Landfill Manager. Visible leachate leaks from tank walls, piping, or other components must be repaired as soon as possible to prevent a larger spill or a discharge to navigable waters. Pooled leachate will be removed immediately upon discovery. Written weekly inspection records are signed by the Director or his designee and maintained in the site records for a period of three (3) years.

1.6 Personnel, Training, and Discharge Prevention Procedures

The Director is the facility designee and is responsible for leachate discharge prevention, control, and response preparedness activities at this facility.

Davidson County Landfill management has trained leachate-handling facility personnel in the operation and maintenance of leachate pollution prevention equipment, discharge procedure protocols, applicable pollution control laws, rules and regulations, general facility operations, and the content of this Leachate Release Prevention Plan. New facility personnel with leachate-handling responsibilities are provided with this same training prior to being involved in leachate operations. Quarterly discharge prevention briefings will be held by the Director for facility personnel involved in leachate operations. Annual drills of leachate release response will also be conducted. These drills will include release reporting to appropriate individuals and response action drills. Records of the briefings and discharge prevention training are documented on the form shown in **Appendix C** and are maintained with this Plan for a period of three (3) years.

2.0 DISCHARGE RESPONSE

This section describes the response and cleanup procedures in the event of a leachate discharge. The uncontrolled discharge of leachate to groundwater, surface water, or soil is prohibited by State and Federal laws. Immediate action must be taken to control, contain, and recover discharged leachate.

In general, the following steps are taken:

- **If possible and safe to do so, identify and shut down the source of the discharge to stop the flow;**
- **Contact the Director and/or Landfill Manager or his alternate;**
- **Contain the discharge with berms, trenches, sandbags, or other material;**
- **The Director or Landfill Manager will contact regulatory authorities and the response organization (Shamrock Environmental, Corp.);**
- **Discuss with regulatory authorities any assessment or corrective actions that may be required; and**
- **Collect and dispose of recovered leachate according to regulations.**

A list of Emergency Contacts is provided in **Appendix D**. Emergency contacts are also posted at a prominent location within the leachate storage area.

2.1 Spill Reporting

The Davidson County Integrated Solid Waste Director and/or Landfill Manager shall be notified immediately of any release of leachate at the landfill. This includes leachate released into the secondary containment or outside the secondary containment. Additionally, the NCDENR Facility Inspector will be notified of any leachate that is released outside the secondary containment system. The Facility Inspector information is below:

Facility Inspector: Hugh Jernigan
NCDENR – Winston-Salem Regional Office
585 Waughtown Street
Winston-Salem, NC 27107
Phone: (336) 771-5093

2.2 Spill Remediation

Once landfill employees have stopped the source of the leak, remediation of spilled leachate and impacted soils and waters will begin. Remediation activities shall be conducted to minimize the migration of leachate as well as to remove leachate and leachate impacted materials. Remediation activities may include (but are not limited to): construction of berms to prevent further migration of leachate; pumping of leachate from ponded areas; removal of leachate impacted soils/gravel.

2.3 Waste Disposal

Following the containment and control of a release, the Director shall provide for proper characterization, collection, treatment, and disposal of materials utilized and impacted by the released leachate. Recovered leachate will be taken to the POTW for disposal. Soils or gravel that have been contacted with leachate may be disposed in the lined landfill cell. In addition, the Director will ensure that effected equipment or materials are replaced and restored to full operational condition.

2.4 Spill Investigation and Documentation

Finally, the Director shall investigate the cause of the release and document the procedures taken during to mitigate the release and remedy the situation. Furthermore, additional steps shall be taken in order to prevent the reoccurrence of a release.

THIS PAGE INTENTIONALLY LEFT BLANK

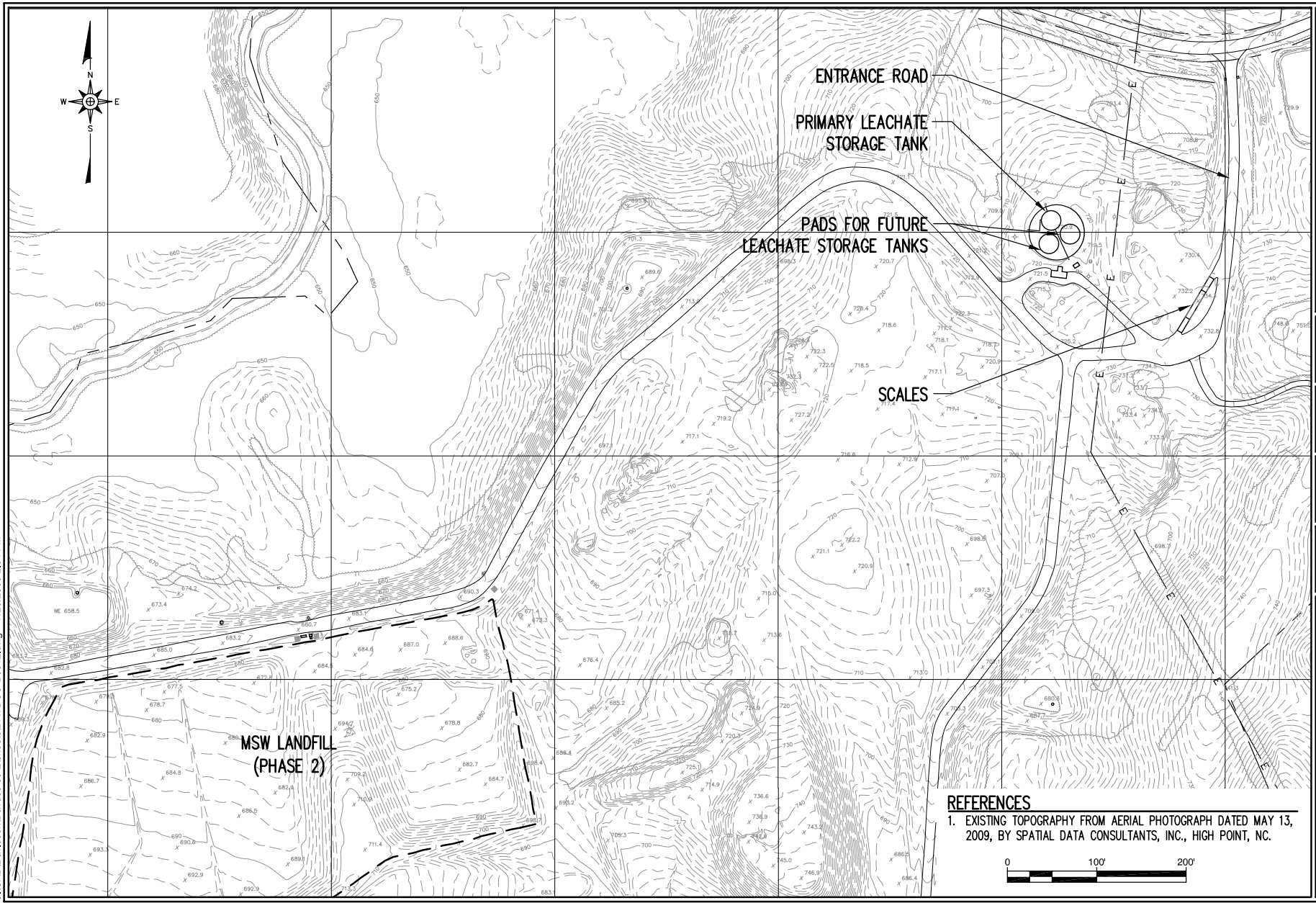

REFERENCES

1. EXISTING TOPOGRAPHY FROM AERIAL PHOTOGRAPH DATED MAY 13, 2009, BY SPATIAL DATA CONSULTANTS, INC., HIGH POINT, NC.

0 100' 200'

RICHARDSON SMITH GARDNER & ASSOCIATES
NC LIC. NO. C-0205 (Engineering)
14 N. Boylan Ave.
Raleigh, N.C. 27603
www.rsgandassocs.com
ph: 919-828-0577
fax: 919-828-2099

FIGURE NO.	2
SCALE:	AS SHOWN
FILE NAME	DAVDCO-B0512
CHECKED BY:	
PROJECT NO.	DAVDCO 09-2
DRAWN BY:	J.A.L.
DATE:	Jul. 2009

TITLE: DAVIDSON COUNTY LANDFILL - PHASE 2
EXISTING CONDITIONS

G:\CAD\Davidson\Davdco 09-2\sheets\DAVDCO-B0512.dwg - 7/29/2009 2:54 PM

THIS PAGE INTENTIONALLY LEFT BLANK

Appendix A
Secondary Containment Storm Water Release Guidelines

THIS PAGE INTENTIONALLY LEFT BLANK

Davidson County Landfill – Phase 2
Leachate Storage Tanks

Procedure for Stormwater Removal from Secondary Containment Tank

1. Observe water in secondary containment tank for any evidence of leachate (sheen on the water surface; discolored water; and/or discharge from primary containment tank).

   If leachate appears to be present, use a submersible pump to remove all water into either a tanker truck or into the primary containment tank. If water appears to be stormwater only, follow Steps 2 through 4.

2. Open the valve just to the north side of the secondary tank and observe the flow of stormwater from the existing stormwater discharge pipe. Optionally, use a submersible pump to remove all water to a nearby drainage channel. Verify that no erosion is occurring at the discharge location.

3. Monitor the flow every 15 minutes until stormwater is removed from the secondary containment tank.

4. CLOSE the VALVE to the stormwater discharge pipe (or turn off the submersible pump if used). Observe that no flow is coming from the stormwater discharge pipe.

THIS PAGE INTENTIONALLY LEFT BLANK

Appendix B
Weekly Leachate Tank Area Inspection Form

THIS PAGE INTENTIONALLY LEFT BLANK

Weekly Inspection of Phase 2 Leachate Storage Tank Area

Date:_____Inspection By:_____Supervisor's Signature:_____

	Y*	N	Description & Comments
Primary Containment Tank(s)			
Tank surfaces show sign of leakage			
Tank(s) are damaged, rusted, or deteriorated			
Bolts, rivets, or seams are damaged			
Level gauge or alarms are inoperable			
Vent is obstructed			
Foundation is cracked			
Secondary Containment Tank			
Tank surfaces show sign of leakage			
Tank is damaged, rusted, or deteriorated			
Bolts, rivets, or seams are damaged			
Concrete floor/foundation is cracked to allow flow of leachate through			
Stormwater removal system is inoperable or shows evidence of leakage			
Piping and Equipment			
Flow meter/batcher is/are inoperable			
Transfer pump is inoperable			
Automatic control valve is inoperable			
Blower is inoperable			
Mixer is inoperable			
Piping or valves show evidence of leaking			
Insulation and heat tracing is not functioning properly and/or is damaged			
Loadout Pad/Sump			
Area around pad shows evidence of spillage			
Sump pump is inoperable			
Discharge piping/valves are damaged and/or inoperable			

* Items that are marked "Yes" and which could result in the failure of the tank(s) to contain leachate, remedial measures will be taken immediately to correct the deficiency. Items that are marked "Yes" and which would not result in the failure of the tank(s) to contain leachate, remedial measures will be taken as soon as practical.

THIS PAGE INTENTIONALLY LEFT BLANK

Appendix C
Quarterly/Annual Training Log Form

THIS PAGE INTENTIONALLY LEFT BLANK

Davidson County Landfill – Phase 2
Quarterly Leachate Release Prevention Training Log and
Annual Release Response Drill Log

Date	Subject	Trainer	Attendees

THIS PAGE INTENTIONALLY LEFT BLANK

Appendix D
Emergency Contacts

THIS PAGE INTENTIONALLY LEFT BLANK

Davidson County Landfill Emergency Contacts

Charles Brushwood
Director of Integrated Solid Waste
Phone: 336-242-2284
Cell: 336-240-0303

Steven Sink
Landfill Manager
Phone: 336 – 242-2284
Cell: 336-240-0666

Hugh Jernigan
Facility Inspector for NCDENR
Winston Salem Regional Office
Phone: 336-771-5093

THIS PAGE INTENTIONALLY LEFT BLANK

Appendix G

Operations Testing Plan

THIS PAGE INTENTIONALLY LEFT BLANK

DAVIDSON COUNTY SOLID WASTE DEPARTMENT

Memo

TO: ALL Operators

FROM: Charlie Brushwood

CC: Steven Sink, Steve Swaim

DATE: July 21, 2009

RE: Operational plan

Each operator received a copy of the operational plan a few weeks ago. This memo is to inform you that regularly scheduled training with tests on the plan will be in October and April of each year. There will also be one training and test per year with a random date.

If you have any questions feel free to contact your supervisor.

Thank You

Charlie Brushwood Landfill director
Please sign and DATE back of memo.

THIS PAGE INTENTIONALLY LEFT BLANK

Name: _____ Date:_____

Davidson County Landfill
Operation Plan Test

1) Our landfill has two-way communication with radios and most employees carry cell phones.
True
False

2) If a hot load is placed on the working face what should you do?
   a) Call fire department, supervisor, and use the fire extinguisher.
   b) Spread as thinly as possible, place daily cover soil on the waste to extinguish the fire, and call the supervisor.
   c) Call someone else who may know what to do.

3) Equipment and trucks should keep how much space between them for safety?
   a) 4 feet
   b) 6 feet
   c) 8-10 feet

4) An ice storm can make access to the landfill dangerous, prevent movement or placement of daily cover, and, thus may require closure of landfill until the ice is removed or has melted.
True
False

5) Heavy rains can create a muddy situation in some portions of the landfill. The control of drainage and use of stone can promote drainage away from critical areas.
True
False

6) During an electrical storm landfill activities will be temporarily stopped until they can be resumed safely.
True
False

7) During wind events you should move portable wind fence to catch all blown materials possible and cover with soil if tarp cannot safely be pulled.
True
False

8) Construction and Demolition debris is which of the following in our operational plan?
   a) Construction and Demolition Debris Waste: Waste or debris from construction, remodeling, repair, or demolition operations on pavement or other structures.
   b) Inert Debris Waste: Concrete, brick, concrete block, uncontaminated soils and rock, untreated and unpainted wood, etc.
   c) Land Clearing Debris: as defined by G.S. 120A-290, specifically, waste that is generated solely from land-clearing activities, such as stumps, trees, etc.
   d) Asphalt: in accordance with G.S. 130-294 (m)
   e) Other Wastes as Approved by the Solid Waste Section of the Division of Waste Management.
   f) All of the above.

9) Which of the following waste is not prohibited from disposal within MSW landfill?
   a) Whole Scrap Tires
   b) Used Oil
   c) White Goods
   d) Lead Acid Batteries
   e) Yard Waste
   f) Construction and Demolition Debris (C&D) (Except when allowed by the County)
   g) Aluminum Cans
   h) Cardboard

10) Waste screening individuals should look for certain things such as hazardous placarding or markings, liquids, powders or dusts, sludge, bright or unusual colors, drums, chemical odors.
   True
   False

11) Spilled or wind-blown debris along the access road will be cleaned up daily and placed in the landfill.
   True
   False

12) What is the minimum soil cover for daily cover if the tarp is not pulled?
   a) 12 inches
   b) 18 inches
   c) 6 inches

13) Waste that will remain for more than 30 days will have how much total cover?
   a) 6 inches
   b) 12 inches
   c) 18 inches

Davidson County Landfill – Phase 2
Operations Manual Training Log

Date	Subject	Trainer	Attendees

THIS PAGE INTENTIONALLY LEFT BLANK