WASTE INDUSTRIES, LLC
FAYETTEVILLE, NORTH CAROLINA

CITY OF FAYETTEVILLE TRANSFER STATION PERMIT TO CONSTRUCT DRAWINGS

MARCH 2009
REVISED MAY 2009

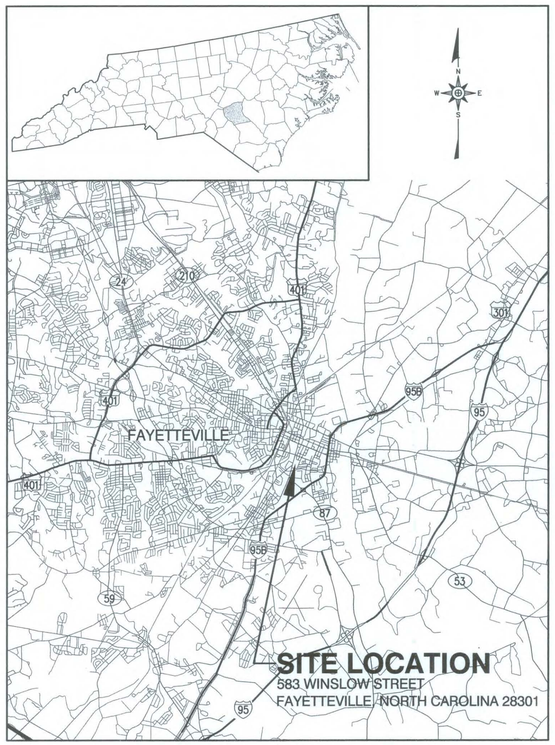

SITE LOCATION MAP
NOT TO SCALE

SHEET NO.	DRAWING NO.	TITLE	REVISION	
1	–	TITLE – COVER SHEET	1	2
2	S1	EXISTING CONDITIONS – DEMOLITION PLAN		2
3	S2	SITE DEVELOPMENT PLAN	1	2
4	S3	LANDSCAPE PLAN/E&S CONTROL PLAN	1	2
5	D1	ROADWAY DETAILS		
6	D2	STANDARD DETAILS – TRAFFIC CIRCULATION		
7	D3	GABION WALL DETAILS	1	2
8	EC1	EROSION AND SEDIMENTATION CONTROL DETAILS (SHEET 1 OF 3)	1	2
9	EC2	EROSION AND SEDIMENTATION CONTROL DETAILS (SHEET 2 OF 3)	1	2
10	EC3	EROSION AND SEDIMENTATION CONTROL DETAILS (SHEET 3 OF 3)		2

PROPERTY OWNER: CITY OF FAYETTEVILLE
433 HAY STREET
FAYETTEVILLE, NC 28301-5537
(910) 433-1984

DEVELOPER: WASTE INDUSTRIES, LLC
3301 BENSON DRIVE, SUITE 601
RALEIGH, NC 27609
(919) 325-3000

ENGINEER:

RICHARDSON SMITH GARDNER & ASSOCIATES
14 N. Boylan Ave.
Raleigh, N.C. 27603
NC LIC. NO. C-0828 (Engineering)
www.rsgengineers.com
ph: 919-828-0577
fax: 919-828-3899

NORTH CAROLINA PROFESSIONAL SEAL 025671 ENGINEER THOMAS B. MAIER 6/11/09

Fayetteville
City of Fayetteville-Engineering Division
☒ Approved ☐ Approved as Corrected ☐ Not Approved ☐ Revise and Resubmit
Approval does not relieve contractor, sub-contractor, material supplier or material manufacturer from their responsibility to comply with the contract specifications and drawings. Checking is only for conformance with the design concept of the project. This approval does not constitute approval of any change in the contract documents.
By: 6/11/09
Remarks: UPDATED PLAN SET

City of Fayetteville
City of Fayetteville-Engineering Division
our office shall be notified prior to construction
433-1613

DATE	NO.	REVISION
5/21/09	2	RESPONSE TO 5/15/09 LGS COMMENTS
5/14/09	1	RESPONSE TO 5/11/09 LGS COMMENTS

STANDARD SECTION LOCATION CALLOUT (SHEET AND DETAIL)

AA / S1 — SECTION REFERENCED; SHEET WHERE SECTION IS PRESENTED

STANDARD DETAIL CALLOUT

1 / S1 — DETAIL REFERENCED; SHEET WHERE DETAIL IS PRESENTED

STANDARD DETAIL LABEL AND CALLOUT

DETAIL TITLE
DETAIL / SCALE AS SHOWN — 1 / S1 — DETAIL REFERENCED; SHEET WHERE DETAIL IS PRESENTED

STANDARD REVISION CALLOUT (SHEET AND DETAIL)

1 — SHEET SET REVISION NUMBER

SHEET SET REVISION NUMBER

DATE	NO.	REVISION
DATE	1	REVISION DESCRIPTION

SAFETY NOTE:
THE CONTRACTOR IS SOLELY RESPONSIBLE FOR SITE SAFETY ASSOCIATED WITH THE WORK UNDER THIS CONTRACT AND FOR COMPLIANCE WITH ALL FEDERAL, STATE AND LOCAL HEALTH AND SAFETY LAWS, CODES, REGULATIONS, AND ORDINANCES INCLUDING BUT NOT LIMITED TO THOSE CURRENTLY MANDATED BY THE OCCUPATIONAL SAFETY AND HEALTH ADMINISTRATION (OSHA).

CONSTRUCTION NOTE:
ALL CONSTRUCTION TO BE IN ACCORDANCE WITH ALL CITY OF FAYETTEVILLE STANDARDS AND SPECIFICATIONS.

FOR REGULATORY REVIEW ONLY

NOT FOR BIDDING OR CONSTRUCTION

FILE NAME: WI-D0559B

G:\CAD\Waste Industries\Fayetteville 07-1\revised 052109\sheets\WI-D0559B.dwg - 5/20/2009 5:28 PM

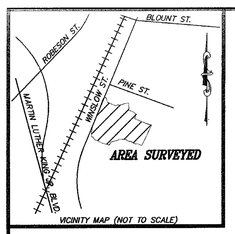

VICINITY MAP (NOT TO SCALE)

SURVEY NOTES

1. THIS SURVEY IS NOT INTENDED TO REPRESENT A BOUNDARY SURVEY. PROPERTY LINES SHOWN ARE APPROXIMATE AND ARE FOR REFERENCE PURPOSES ONLY.
2. ELEVATIONS BASED ON NAVD 88. THE BENCHMARK FOR THE SITE IS NGS " K 31". ELEVATION=107.46
3. SITE COORDINATES ARE BASED ON NC GRID NAD 83(NCRS 2007) AND WERE ESTABLISHED USING GPS WITH VRS CORRECTIONS PROVIDED BY NCGS.
4. EXCLUDING SEWER AND STORM, NO UNDERGROUND UTILITY LOCATIONS WERE PROVIDED.
5. WETLAND DELINEATION PROVIDED BY CAROLINA ECOSYSTEMS, INC.

WETLAND FLAG LOCATION TABLE

FLAG DESIGNATION	NORTHING	EASTING
wa-100	471096.8	2032911.1
wa-101	471169.4	2032912.7
wa-102	471249.3	2032901.6
wa-103	471307.1	2032893.0
wa-104	471275.8	2032912.9
wa-105	471262.2	2032952.4
wa-106	471240.5	2032993.7
wa-107	471226.9	2033035.5
wa-108	471237.7	2033069.8
wa-109	471277.4	2033103.3
wa-110	471297.7	2033131.8
wa-111	471268.0	2033170.2
wa-111a	471277.8	2033219.0
wa-112	471276.3	2033250.0
wa-113	471271.4	2033271.1
wa-114	471254.7	2033296.3
wa-115	471253.6	2033313.3
wa-116	471233.5	2033356.3
wa-117	471225.5	2033373.9
wa-118	471183.8	2033366.4
wa-119	471158.9	2033383.1
wa-120	471144.7	2033412.6
wb-101	471273.4	2033307.7
wb-102	471300.3	2033298.2
wb-103	471326.1	2033283.4
wb-104	471373.5	2033293.6
wb-105	471390.1	2033312.9
wb-106	471392.1	2033307.5
wb-107	471322.5	2033307.9
wb-108	471321.1	2033348.6
wb-109	471306.4	2033312.4
wb-110	471272.6	2033317.0

LEGEND

- BC — BACK OF CURB
- SIGN
- OHU — OVERHEAD UTILITIES
- GV — GAS VALVE/TEST STATION
- GM — GAS METER
- ELECTRIC TRANSFORMER
- GW — GUY WIRE
- LIGHT POLE
- UTILITY POLE
- S — SEWER MANHOLE
- YARD INLET
- CURB INLET
- WM — WATER METER
- WV — WATER VALVE
- FIRE HYDRANT
- TREELINE
- TREE
- 100.0 — SPOT ELEVATION
- 100 — INDEX CONTOUR
- INTERMEDIATE CONTOUR
- SURVEY CONTROL
- 12 — REFERENCE LOT NUMBER

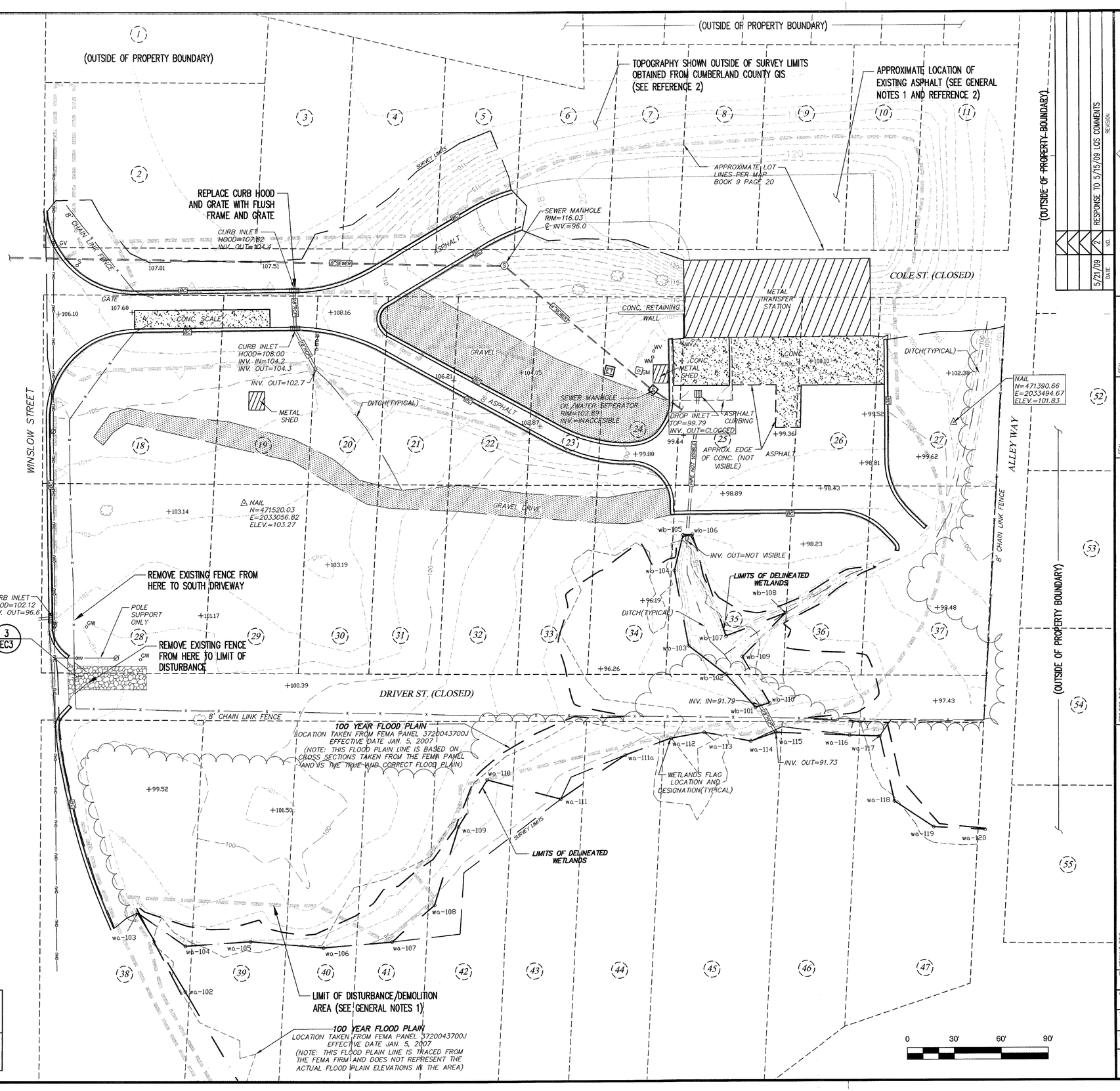

LEGEND

LIMIT OF DISTURBANCE (ARROW INDICATES DISTURBED SIDE)

GERERAL NOTES

1. ALL EXISTING STRUCTURES WITHIN THE LIMITS OF DISTURBANCE/DEMOLITION BOUNDARY, WITH THE EXCEPTION OF MOST UNDERGROUND UTILITIES, WILL BE DEMOLISHED
2. REFER TO DRAWING S2 FOR COMPLETE PROPERTY BOUNDARY.

REFERENCES

1. EXISTING SITE CONDITIONS OBTAINED FROM SURVEY DRAWING ENTITLED, WETLAND FLAG LOCATION AND TOPOGRAPHIC SURVEY OF THE CITY OF FAYETTEVILLE RECYCLING PROPERTY, CREATED BY SURVEYING SOLUTIONS, P.C., RALEIGH, NC, ON JANUARY 19, 2009.
2. TOPOGRAPHY AND EXISTING FEATURES SHOWN NORTH OF THE SURVEY BOUNDARY CREATED BY SURVEYING SOLUTIONS, P.C., WAS OBTAINED FROM THE CUMBERLAND COUNTY GIS DEPARTMENT.

CONSTRUCTION NOTE:
ALL CONSTRUCTION TO BE IN ACCORDANCE WITH ALL CITY OF FAYETTEVILLE STANDARDS AND SPECIFICATIONS.

SAFETY NOTE:
THE CONTRACTOR IS SOLELY RESPONSIBLE FOR SITE SAFETY ASSOCIATED WITH THE WORK UNDER THIS CONTRACT AND FOR COMPLIANCE WITH ALL FEDERAL, STATE AND LOCAL HEALTH AND SAFETY LAWS, CODES, REGULATIONS, AND ORDINANCES INCLUDING BUT NOT LIMITED TO THOSE CURRENTLY MANDATED BY THE OCCUPATIONAL SAFETY AND HEALTH ADMINISTRATION (OSHA).

FOR REGULATORY REVIEW ONLY

NOT FOR BIDDING OR CONSTRUCTION

REVISION	DATE	NO.
RESPONSE TO 5/15/09 LOS COMMENTS	5/21/09	2

RICHARDSON SMITH GARDNER & ASSOCIATES
NC LIC. NO. C-0208 (engineering)
www.rsgengineers.com
14 W. Boylan Ave.
Raleigh, N.C. 27603
ph: 919-828-0577
fax: 919-828-3899

SEAL

PROJECT TITLE: CITY OF FAYETTEVILLE TRANSFER STATION PERMIT TO CONSTRUCT DRAWINGS

DRAWING TITLE: EXISTING CONDITIONS/ DEMOLITION PLAN

DESIGNED BY: TBM	DRAWN BY: WRB
CHECKED BY:	PROJECT NO.: FAYETTE 09-11
SCALE: AS SHOWN	DATE: MAR 2009
FILE NAME: WI-D0560A	
SHEET NO. 2	DRAWING NO. S1

G:\CAD\Waste Industries\Fayetteville 07-1\revised 052109\sheets\WI-D0560A.dwg - 5/20/2009 3:23 PM

ADJACENT PROPERTIES				
MAP I.D.	PIN	STREET	BUILDING	OWNER
1	0437-31-1811	WINSLOW	NO	U.S. INDUSTRIES, INC.
2	0437-31-2852	PINE	NO	M.W. MANUFACTURERS, INC.
3	0437-31-4715	PINE	NO	M.W. MANUFACTURERS, INC.
4	0437-31-4763	PINE	NO	M.W. MANUFACTURERS, INC.
5	0437-31-5701	PINE	NO	M.W. MANUFACTURERS, INC.
6	0437-31-5659	PINE	NO	M.W. MANUFACTURERS, INC.
7	0437-31-5698	PINE	NO	M.W. MANUFACTURERS, INC.
8	0437-31-6626	PINE	NO	M.W. MANUFACTURERS, INC.
9	0437-31-6896	PINE	YES	M.W. MANUFACTURERS, INC.
10	0437-30-4912	KORT	NO	BUNCE, JOHN, JUDITH &
11	0437-30-1980	KORT	NO	BUNCE, JOHN, JUDITH &
12	0437-20-9991	WINSLOW	NO	BUNCE, JOHN, JUDITH &
13	0437-20-7837	WINSLOW	NO	FAULK, ROBERT S. & WIFE
14	0437-21-5131	WINSLOW	NO	N.C. DEPT. OF TRANSPORTATION
15	0437-21-6404	WINSLOW	YES	N.C. DEPT. OF TRANSPORTATION
16	0437-21-6555	WINSLOW	YES	PATTERSON RECORD STORAGE
17	0437-21-9815	WINSLOW	YES	HUBBARD PIPE & SUPPLY, INC.

REFERENCE: PROPERTY OWNER INFORMATION IS FROM PARCEL DATA PROVIDED BY CUMBERLAND COUNTY GIS DEPARTMENT.

CULVERT SCHEDULE							
NO.	NO. OF PIPES	SIZE	LENGTH (FT)	INV. IN (FT)	INV. OUT (FT)	SLOPE (%)	REMARKS
C-1	1	18" RCP (CLASS V)	100	98.9	97.9	1.0	INLET IN DI-1
C-2	2	18" RCP (CLASS V)	40	97.8	97.4	1.0	INLET IN DI-2
C-3	1	30" RCP (CLASS III)	185	97.3	95.5	0.97	INLET IN DI-3

SAFETY NOTE:

THE CONTRACTOR IS SOLELY RESPONSIBLE FOR SITE SAFETY ASSOCIATED WITH THE WORK UNDER THIS CONTRACT AND FOR COMPLIANCE WITH ALL FEDERAL, STATE AND LOCAL HEALTH AND SAFETY LAWS, CODES, REGULATIONS, AND ORDINANCES INCLUDING BUT NOT LIMITED TO THOSE CURRENTLY MANDATED BY THE OCCUPATIONAL SAFETY AND HEALTH ADMINISTRATION (OSHA).

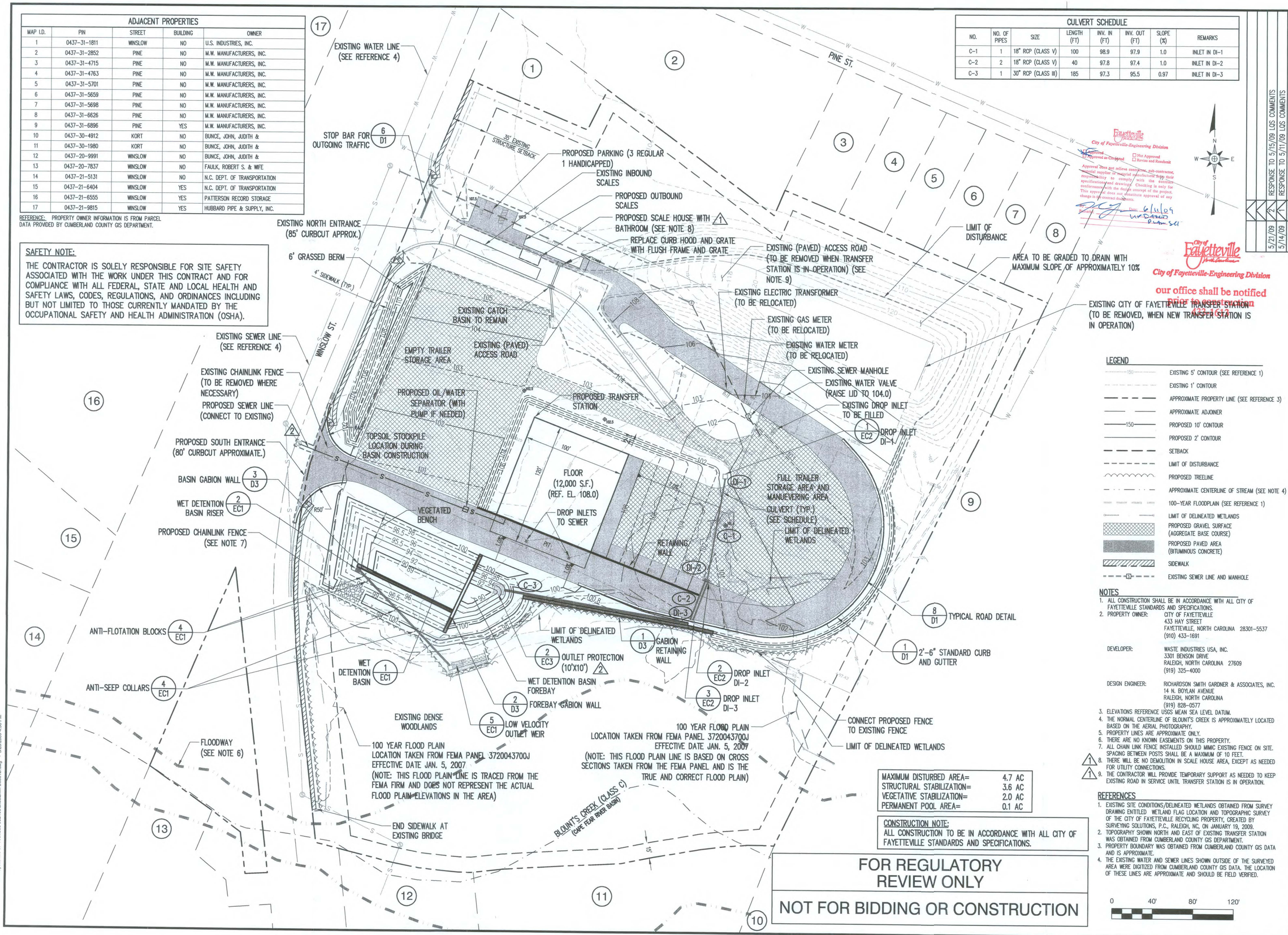

MAXIMUM DISTURBED AREA=	4.7 AC
STRUCTURAL STABILIZATION=	3.6 AC
VEGETATIVE STABILIZATION=	2.0 AC
PERMANENT POOL AREA=	0.1 AC

CONSTRUCTION NOTE:
ALL CONSTRUCTION TO BE IN ACCORDANCE WITH ALL CITY OF FAYETTEVILLE STANDARDS AND SPECIFICATIONS.

FOR REGULATORY REVIEW ONLY

NOT FOR BIDDING OR CONSTRUCTION

LEGEND

- EXISTING 5' CONTOUR (SEE REFERENCE 1)
- EXISTING 1' CONTOUR
- APPROXIMATE PROPERTY LINE (SEE REFERENCE 3)
- APPROXIMATE ADJOINER
- PROPOSED 10' CONTOUR
- PROPOSED 2' CONTOUR
- SETBACK
- LIMIT OF DISTURBANCE
- PROPOSED TREELINE
- APPROXIMATE CENTERLINE OF STREAM (SEE NOTE 4)
- 100-YEAR FLOODPLAIN (SEE REFERENCE 1)
- LIMIT OF DELINEATED WETLANDS
- PROPOSED GRAVEL SURFACE (AGGREGATE BASE COURSE)
- PROPOSED PAVED AREA (BITUMINOUS CONCRETE)
- SIDEWALK
- EXISTING SEWER LINE AND MANHOLE

NOTES

1. ALL CONSTRUCTION SHALL BE IN ACCORDANCE WITH ALL CITY OF FAYETTEVILLE STANDARDS AND SPECIFICATIONS.
2. PROPERTY OWNER: CITY OF FAYETTEVILLE, 433 HAY STREET, FAYETTEVILLE, NORTH CAROLINA 28301-5537, (910) 433-1691
   DEVELOPER: WASTE INDUSTRIES USA, INC., 3301 BENSON DRIVE, RALEIGH, NORTH CAROLINA 27609, (919) 325-4000
   DESIGN ENGINEER: RICHARDSON SMITH GARDNER & ASSOCIATES, INC., 14 N. BOYLAN AVENUE, RALEIGH, NORTH CAROLINA, (919) 828-0577
3. ELEVATIONS REFERENCE USGS MEAN SEA LEVEL DATUM.
4. THE NORMAL CENTERLINE OF BLOUNT'S CREEK IS APPROXIMATELY LOCATED BASED ON THE AERIAL PHOTOGRAPHY.
5. PROPERTY LINES ARE APPROXIMATE ONLY.
6. THERE ARE NO KNOWN EASEMENTS ON THIS PROPERTY.
7. ALL CHAIN LINK FENCE INSTALLED SHOULD MIMIC EXISTING FENCE ON SITE. SPACING BETWEEN POSTS SHALL BE A MAXIMUM OF 10 FEET.
8. THERE WILL BE NO DEMOLITION IN SCALE HOUSE AREA, EXCEPT AS NEEDED FOR UTILITY CONNECTIONS.
9. THE CONTRACTOR WILL PROVIDE TEMPORARY SUPPORT AS NEEDED TO KEEP EXISTING ROAD IN SERVICE UNTIL TRANSFER STATION IS IN OPERATION.

REFERENCES

1. EXISTING SITE CONDITIONS/DELINEATED WETLANDS OBTAINED FROM SURVEY DRAWING ENTITLED WETLAND FLAG LOCATION AND TOPOGRAPHIC SURVEY OF THE CITY OF FAYETTEVILLE RECYCLING PROPERTY, CREATED BY SURVEYING SOLUTIONS, P.C., RALEIGH, NC, ON JANUARY 19, 2009.
2. TOPOGRAPHY SHOWN NORTH AND EAST OF EXISTING TRANSFER STATION WAS OBTAINED FROM CUMBERLAND COUNTY GIS DEPARTMENT.
3. PROPERTY BOUNDARY WAS OBTAINED FROM CUMBERLAND COUNTY GIS DATA AND IS APPROXIMATE.
4. THE EXISTING WATER AND SEWER LINES SHOWN OUTSIDE OF THE SURVEYED AREA WERE DIGITIZED FROM CUMBERLAND COUNTY GIS DATA. THE LOCATION OF THESE LINES ARE APPROXIMATE AND SHOULD BE FIELD VERIFIED.

0 40' 80' 120'

NO.	DATE	REVISION
2	5/21/09	RESPONSE TO 5/15/09 LGS COMMENTS
1	5/14/09	RESPONSE TO 5/11/09 LGS COMMENTS

RICHARDSON SMITH GARDNER & ASSOCIATES
14 N. Boylan Ave. Raleigh, N.C. 27603
ph: 919-828-0577 fax: 919-828-3889
www.rsgengineers.com

SEAL

PROJECT TITLE: CITY OF FAYETTEVILLE TRANSFER STATION PERMIT TO CONSTRUCT DRAWINGS

DRAWING TITLE: SITE DEVELOPMENT PLAN

DESIGNED BY: TBM	DRAWN BY: WRB
CHECKED BY:	PROJECT NO.: FAYETTE 09-11
SCALE: AS SHOWN	DATE: MAR 2009
FILE NAME: WI-D0561B	
SHEET NO. 3	DRAWING NO. S2

G:\CAD\Waste Industries\Fayetteville 07-1\revised 052109\sheets\WI-D0561B.dwg - 5/20/2009 4:36 PM

CONSTRUCTION SEQUENCE NOTES:
1. INSTALL SILT FENCE ALONG NORTHERN, SOUTHERN, AND EASTERN LIMITS OF DISTURBANCE.
2. SELECT EXISTING TREES TO BE SAVED AND MARK WITH TREE PROTECTION FENCE.
3. CONSTRUCT WET DETENTION BASIN AND SEED TEMPORARY VEGETATIVE STABILIZATION.
4. CONSTRUCT GABION RETAINING WALL, ROUGH GRADE SITE, AND INSTALL STORM DRAINAGE WITH INLET PROTECTION.
5. EXTEND EXISTING UTILITIES TO PROPOSED BUILDING, AND INSTALL SEWER CONNECTION FROM PROPOSED BUILDING.
6. PLACE INITIAL LAYER OF AGGREGATE ON AREAS TO BE GRAVEL OR ASPHALT SURFACED.
7. CONSTRUCT THE BUILDING AND COMPLETE THE SITE DEVELOPMENT.
8. ESTABLISH PERMANENT VEGETATIVE STABILIZATION, EXCEPT IN BASIN.
9. CLEAN SEDIMENT FROM WET DETENTION BASIN, AND ESTABLISH VEGETATION ACCORDING TO THE PLANT LIST.
10. AFTER SURFACES ARE STABILIZED REMOVE INLET PROTECTION, AND REMOVE SILT FENCE AND TREE PROTECTION FENCE.

LANDSCAPE NOTES:
1. TOTAL LINEAR FEET OF FRONTAGE ON PUBLIC RIGHT-OF-WAY = 781 FT (MINUS 160 FT FOR DRIVEWAYS AND 200 FT OF UNDISTURBED TREE BUFFER)
2. TOTAL SQUARE FOOTAGE OF VEHICULAR USE AREA = 96,472 SF (ALL SCREENED FROM PUBLIC RIGHT-OF-WAY).
3. TOTAL NUMBER OF LARGE SHADE TREE USED: 8 LARGE SHADE TREES (5 PROPOSED, 3 EXISTING) (PLUS 200 FT OF UNDISTURBED TREE BUFFER).
4. SCREENING FOR WASTE TRANSFER OPERATION: 6-FOOT HIGH GRASSED BERM.
5. FOR LANDSCAPE CONTRACTOR'S RESPONSIBILITIES, REFER TO TECHNICAL SPECIFICATIONS.
6. TOTAL SQUARE FOOTAGE OF PERMANENT SEEDING = APPROXIMATELY 87,507 SF.

SOIL SPECIFICATIONS:
SURFICIAL SOIL USED IN THE WET DETENTION BASIN FROM ELEV. 95.5 TO ELEV. 100.0 MUST ADHERE TO THE FOLLOWING REQUIREMENTS:
1. THE SOIL MIX MUST BE UNIFORM AND FREE OF STONES, STUMPS, ROOTS, OR OTHER SIMILAR MATERIAL GREATER THAN 2 INCHES.
2. SOIL TEXTURE OF THE MIX SHOULD BE LOAMY SAND, WITH NO MORE THAN 10% CLAY (USDA SOIL TEXTURAL CLASSIFICATION).
3. THE SOIL MIX MUST HAVE A MINIMUM ORGANIC CONTENT OF 5% BY DRY WEIGHT.
4. THE PH SHOULD BE BETWEEN 5.5 AND 7.0. IF THE PH FALLS OUTSIDE OF THIS RANGE, IT MAY INCREASED WITH LIME OR DECREASED WITH IRON SULFATE AND SULFUR MIXED UNIFORMLY INTO THE SOIL PRIOR TO USE.

MAINTENANCE PROCEDURES FOR WET DETENTION BASIN:
1. IMMEDIATELY AFTER THE WET DETENTION BASIN IS ESTABLISHED, THE PLANTS ON THE VEGETATED SHELF AND PERIMETER OF THE BASIN SHOULD BE WATERED TWICE WEEKLY IF NEEDED, UNTIL THE PLANTS BECOME ESTABLISHED (COMMONLY SIX WEEKS).
2. NO PORTION OF THE WET DETENTION BASIN SHOULD BE FERTILIZED AFTER THE FIRST INITIAL FERTILIZATION THAT IS REQUIRED TO ESTABLISH THE PLANTS ON THE VEGETATED SHELF.
3. STABLE GROUNDCOVER SHOULD BE MAINTAINED IN THE DRAINAGE AREA TO REDUCE THE SEDIMENT LOAD TO THE WET DETENTION BASIN.
4. IF THE BASIN MUST BE DRAINED (PUMPED) FOR AN EMERGENCY OR TO PERFORM MAINTENANCE, THE TRANSPORT OF SEDIMENT FROM THE BASIN SHOULD BE MINIMIZED.

PLANT LIST*

SCIENTIFIC NAME	COMMON NAME	QUANTITY	CONTAINER SIZE	CONTAINER TYPE
GROUP 1 (SHALLOW WATER) (1,350 SF)				
SCIRPUS AMERICANUS	THREE SQUARE BULRUSH	110	4 CUBIC INCH	CONTAINER
CYPERUS ARISTATUS	FLAT SEDGE	118	4 CUBIC INCH	CONTAINER
JUNCUS EFFUSUS	SOFTRUSH	110	4 CUBIC INCH	CONTAINER
GROUP 2 (SHALLOW LAND) (1,454 SF)				
ASCLEPIAS INCARNATE	SWAMP MILKWEED	120	4 CUBIC INCH	CONTAINER
CAREX SPP.	SEDGES	124	4 CUBIC INCH	CONTAINER
DICHROMENA LATIFOLIA	WHITE STAR GRASS	120	4 CUBIC INCH	CONTAINER
GROUP 3 (PLANTING STRIP ALONG PUBLIC RIGHT-OF-WAY)				
PYRUS CALLERYANA "BRADFORD"	BRADFORD PEAR	5	MINIMUM 2" CALIPER AND 10' HEIGHT	BURLAP ON ROOT BALL
TO BE SELECTED ON SITE		3	MINIMUM 2" CALIPER AND 10' HEIGHT	EXISTING TREE

*PLANT LIST MAY BE REVISED BASED ON ADDITIONAL INFORMATION THAT BECOMES AVAILABLE.

THE ANGLE FOR GRADED SLOPES AND FILLS SHALL BE NO GREATER THAN THE ANGLE THAT CAN BE RETAINED BY VEGETATIVE COVER OR OTHER ADEQUATE EROSION-CONTROL DEVICES OR STRUCTURES. IN ANY EVENT, SLOPES LEFT EXPOSED WILL, WITHIN 21 CALENDAR DAYS OF COMPLETION OF ANY PHASE OF GRADING, BE PLANTED OR OTHERWISE PROVIDED WITH TEMPORARY GROUND COVER, DEVICES OR STRUCTURES TO RESTRAIN EROSION. PERMANENT GROUNDCOVER WILL BE PROVIDED FOR ALL DISTURBED AREAS WITHIN 15 WORKING DAYS OR NO MORE THAN 90 CALENDAR DAYS (PER GENERAL STATUTE 113A-57 PARAGRAPH (2) & (3)).

FOR REGULATORY REVIEW ONLY

NOT FOR BIDDING OR CONSTRUCTION

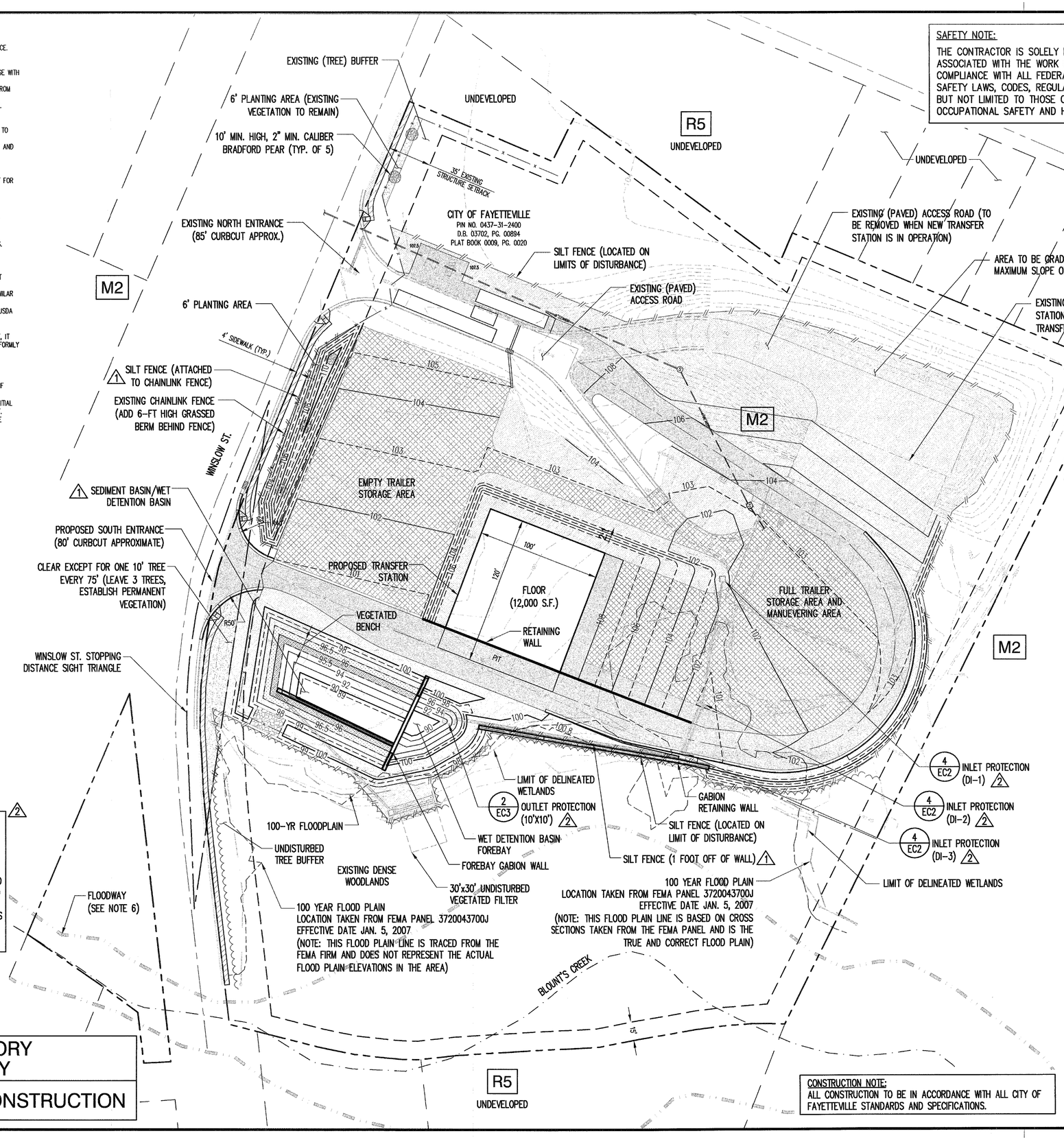

SAFETY NOTE:
THE CONTRACTOR IS SOLELY RESPONSIBLE FOR SITE SAFETY ASSOCIATED WITH THE WORK UNDER THIS CONTRACT AND FOR COMPLIANCE WITH ALL FEDERAL, STATE AND LOCAL HEALTH AND SAFETY LAWS, CODES, REGULATIONS, AND ORDINANCES INCLUDING BUT NOT LIMITED TO THOSE CURRENTLY MANDATED BY THE OCCUPATIONAL SAFETY AND HEALTH ADMINISTRATION (OSHA).

LEGEND
- EXISTING 5' CONTOUR (SEE REFERENCE 1)
- EXISTING 1' CONTOUR
- APPROXIMATE PROPERTY LINE (SEE REFERENCE 1)
- APPROXIMATE ADJOINER
- PROPOSED 10' CONTOUR
- PROPOSED 2' CONTOUR
- PROPOSED 1' CONTOUR
- SETBACK
- SILT FENCE
- PROPOSED TREE LINE
- APPROXIMATE CENTERLINE OF STREAM (SEE NOTE 6)
- 100 YEAR FLOODPLAIN (SEE REFERENCE 1)
- PROPOSED GRAVEL/AGGREGATE BASE COURSE SURFACE
- PROPOSED PAVED AREA (BITUMINOUS CONCRETE)
- PLANT GROUP 1
- PLANT GROUP 2
- PERMANENT SEEDING
- M2 ZONING DESIGNATION

NOTES
1. ALL CONSTRUCTION SHALL BE IN ACCORDANCE WITH ALL CITY OF FAYETTEVILLE STANDARDS AND SPECIFICATIONS.
2. PROPERTY OWNER: CITY OF FAYETTEVILLE, 433 HAY STREET, FAYETTEVILLE, NORTH CAROLINA 28301-5537, (910) 433-1691
   DEVELOPER: WASTE INDUSTRIES, LLC, 3301 BENSON DRIVE, RALEIGH, NORTH CAROLINA 27609, (919) 325-4000
   DESIGN ENGINEER: RICHARDSON SMITH GARDNER & ASSOCIATES, INC., 14 N. BOYLAN AVENUE, RALEIGH, NORTH CAROLINA, (919) 828-0577
3. ELEVATIONS REFERENCE USGS MEAN SEA LEVEL DATUM.
4. THE NORMAL BANK AND CENTERLINE OF BLOUNT'S CREEK ARE APPROXIMATELY LOCATED BASED ON THE AERIAL PHOTOGRAPHY.
5. PROPERTY LINES ARE APPROXIMATE ONLY.
6. THERE ARE NO KNOWN EASEMENTS ON THIS PROPERTY.

REFERENCES
1. EXISTING SITE CONDITIONS/DELINEATED WETLANDS OBTAINED FROM SURVEY DRAWING ENTITLED WETLAND FLAG LOCATION AND TOPOGRAPHIC SURVEY OF THE CITY OF FAYETTEVILLE RECYCLING PROPERTY, CREATED BY SURVEYING SOLUTIONS, P.C., RALEIGH, NC, ON JANUARY 19, 2009.
2. TOPOGRAPHY SHOWN NORTH OF EXISTING TRANSFER STATION WAS OBTAINED FROM CUMBERLAND COUNTY GIS DEPARTMENT.

0 40' 80' 120'

CONSTRUCTION NOTE:
ALL CONSTRUCTION TO BE IN ACCORDANCE WITH ALL CITY OF FAYETTEVILLE STANDARDS AND SPECIFICATIONS.

NO.	DATE	REVISION
2	5/21/09	RESPONSE TO 5/15/09 LGS COMMENTS
1	5/14/09	RESPONSE TO 5/11/09 LGS COMMENTS

RICHARDSON SMITH GARDNER & ASSOCIATES
NC LIC. NO. C-0581 (Engineering)
www.rsgarchitects.com
14 N. Boylan Ave. Raleigh, N.C. 27603
ph: 919-828-0577
fax: 919-828-3899

SEAL

PROJECT TITLE: CITY OF FAYETTEVILLE TRANSFER STATION PERMIT TO CONSTRUCT DRAWINGS

DRAWING TITLE: LANDSCAPE PLAN/ E&S CONTROL PLAN

DESIGNED BY: TBM	DRAWN BY: WRB
CHECKED BY:	PROJECT NO.: FAYETTE 09-11
SCALE: AS SHOWN	DATE: MAR 2009
FILE NAME: WI-D0562B	
SHEET NO. 4	DRAWING NO. S3

G:\CAD\Waste Industries\Fayetteville (X-1)\revised 052109\sheets\WI-D0562B.dwg - 5/20/2009 4:35 PM

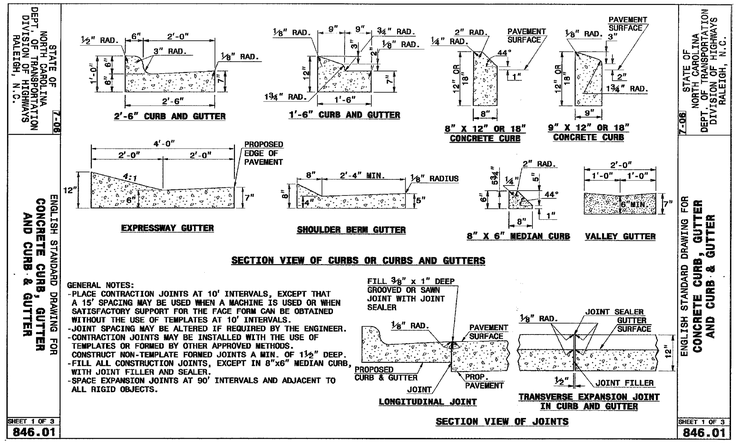

NCDOT 846.01 – CONCRETE CURB AND GUTTER

DETAIL 1/D1 NOT TO SCALE

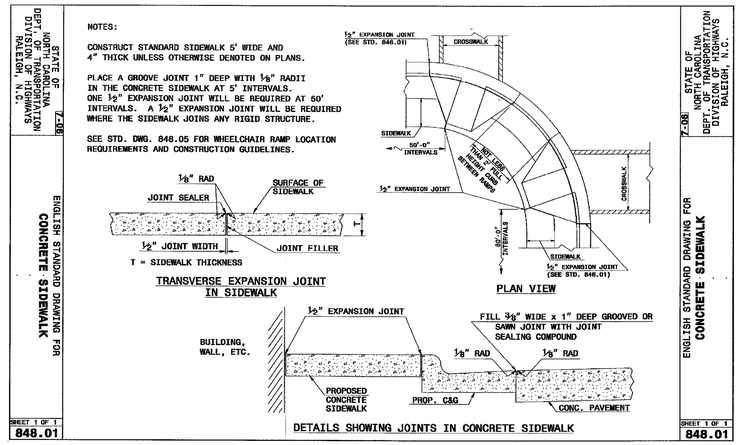

NCDOT 848.01 – CONCRETE SIDEWALK

DETAIL 2/D1 NOT TO SCALE

FOR REGULATORY REVIEW ONLY

NOT FOR BIDDING OR CONSTRUCTION

SAFETY NOTE:

THE CONTRACTOR IS SOLELY RESPONSIBLE FOR SITE SAFETY ASSOCIATED WITH THE WORK UNDER THIS CONTRACT AND FOR COMPLIANCE WITH ALL FEDERAL, STATE AND LOCAL HEALTH AND SAFETY LAWS, CODES, REGULATIONS, AND ORDINANCES INCLUDING BUT NOT LIMITED TO THOSE CURRENTLY MANDATED BY THE OCCUPATIONAL SAFETY AND HEALTH ADMINISTRATION (OSHA).

CONSTRUCTION NOTE:

ALL CONSTRUCTION TO BE IN ACCORDANCE WITH ALL CITY OF FAYETTEVILLE STANDARDS AND SPECIFICATIONS.

NO.	DATE	REVISION

RICHARDSON SMITH GARDNER & ASSOCIATES
14 N. Boylan Ave. Raleigh, N.C. 27603
ph: 919-828-0577
fax: 919-828-3899
www.rsgengineers.com

SEAL

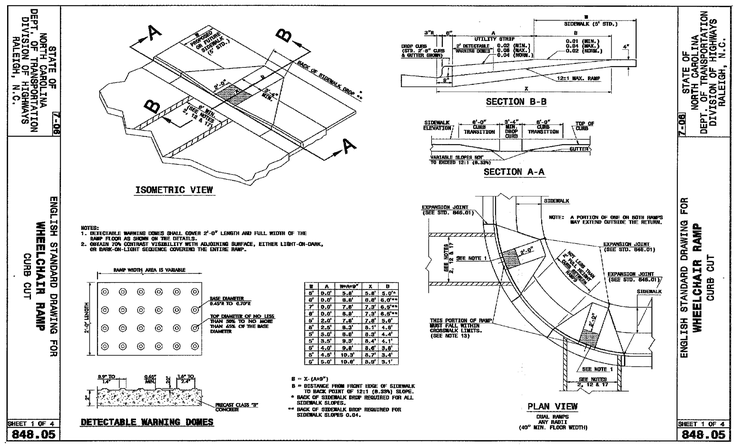

NCDOT 848.05 (1 OF 4) – WHEELCHAIR RAMP CURB CUT

DETAIL 3/D1 NOT TO SCALE

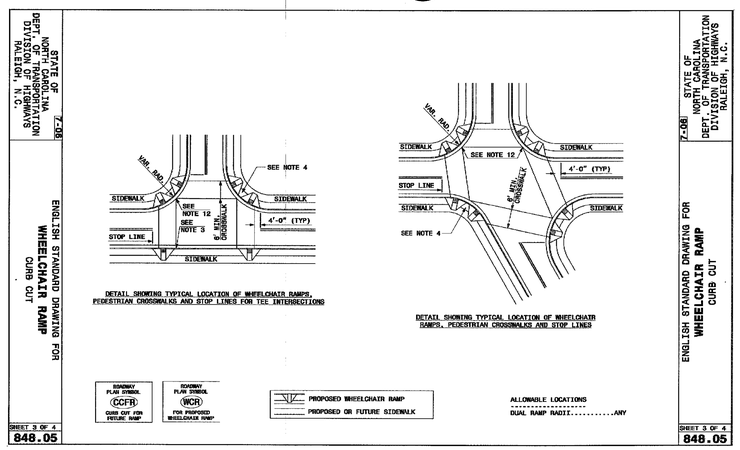

NCDOT 848.05 (2 OF 4) – WHEELCHAIR RAMP CURB CUT

DETAIL 4/D1 NOT TO SCALE

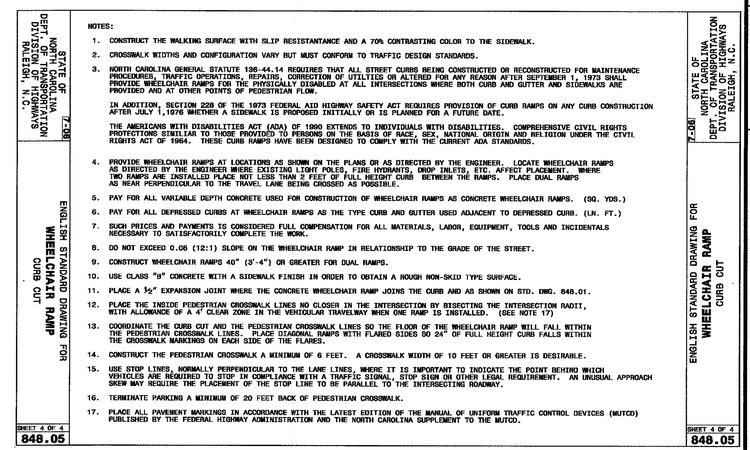

NCDOT 848.05 (4 OF 4) – WHEELCHAIR RAMP CURB CUT

DETAIL 5/D1 NOT TO SCALE

PROJECT TITLE: CITY OF FAYETTEVILLE TRANSFER STATION PERMIT TO CONSTRUCT DRAWINGS

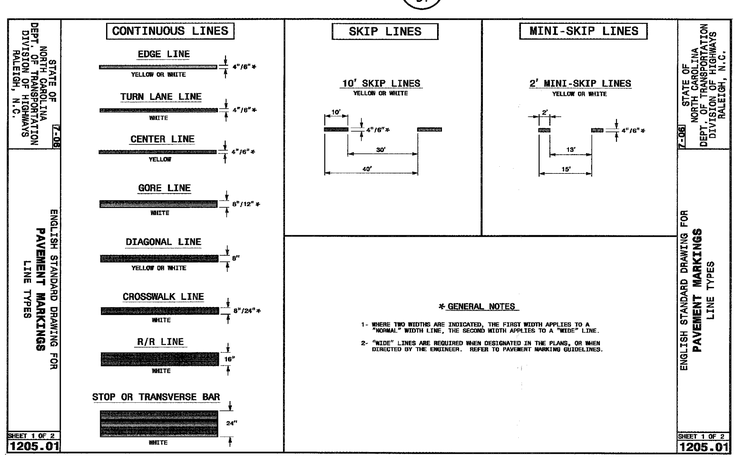

NCDOT 1205.01 – PAVEMENT MARKINGS – LINE TYPES

DETAIL 6/D1 NOT TO SCALE

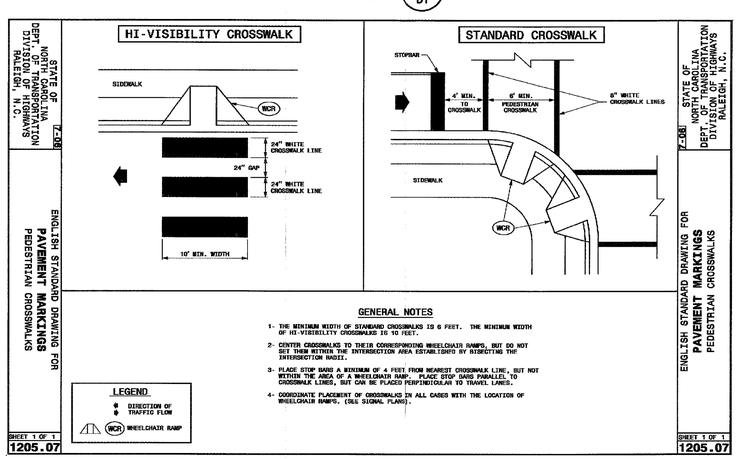

NCDOT 1205.07 – PAVEMENT MARKINGS – PEDESTRIAN CROSSWALKS

DETAIL 7/D1 NOT TO SCALE

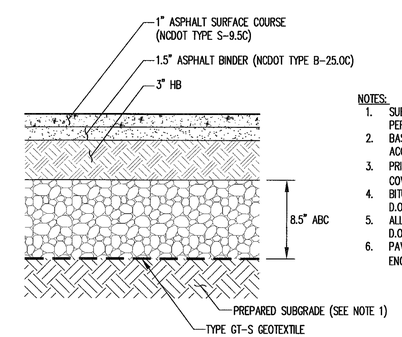

NOTES:

1. SUBGRADE TO BE COMPACTED TO 95% FOR MAXIMUM DENSITY PER ASTM D1557.
2. BASE TO BE COMPACTED TO NOT LESS THAN 100% DENSITY IN ACCORDANCE WITH ASTM D3318.
3. PRIME COAT TO BE 0.25 GAL PER SQUARE YARD (MIN. COVERAGE) MC-70.
4. BITUMINOUS MATERIAL SHALL CONFORM TO THE LEAST LOCAL D.O.T. SPECIFICATIONS.
5. ALL WORKMANSHIP SHALL CONFIRM TO THE LATEST LOCAL D.O.T. STANDARDS AND PERFORMANCE SPECIFICATIONS.
6. PAVEMENT SECTION MAY VERY DUE TO LOCAL ENGINEERING/CONSTRUTION STANDARDS AND PRACTICES.

TYPICAL ONSITE PAVEMENT HEAVY DUTY ASPHALT

DETAIL 8/D1 NOT TO SCALE

DRAWING TITLE: ROADWAY DETAILS

DESIGNED BY: TBM	DRAWN BY: WRB
CHECKED BY:	PROJECT NO.: FAYETTE 09-11
SCALE: AS SHOWN	DATE: MAR 2009
FILE NAME: WI-D0563	
SHEET NO. 5	DRAWING NO. D1

G:\CAD\Waste Industries\Fayetteville 07-1\sheets\WI-D0563.dwg - 3/26/2009 3:47 PM

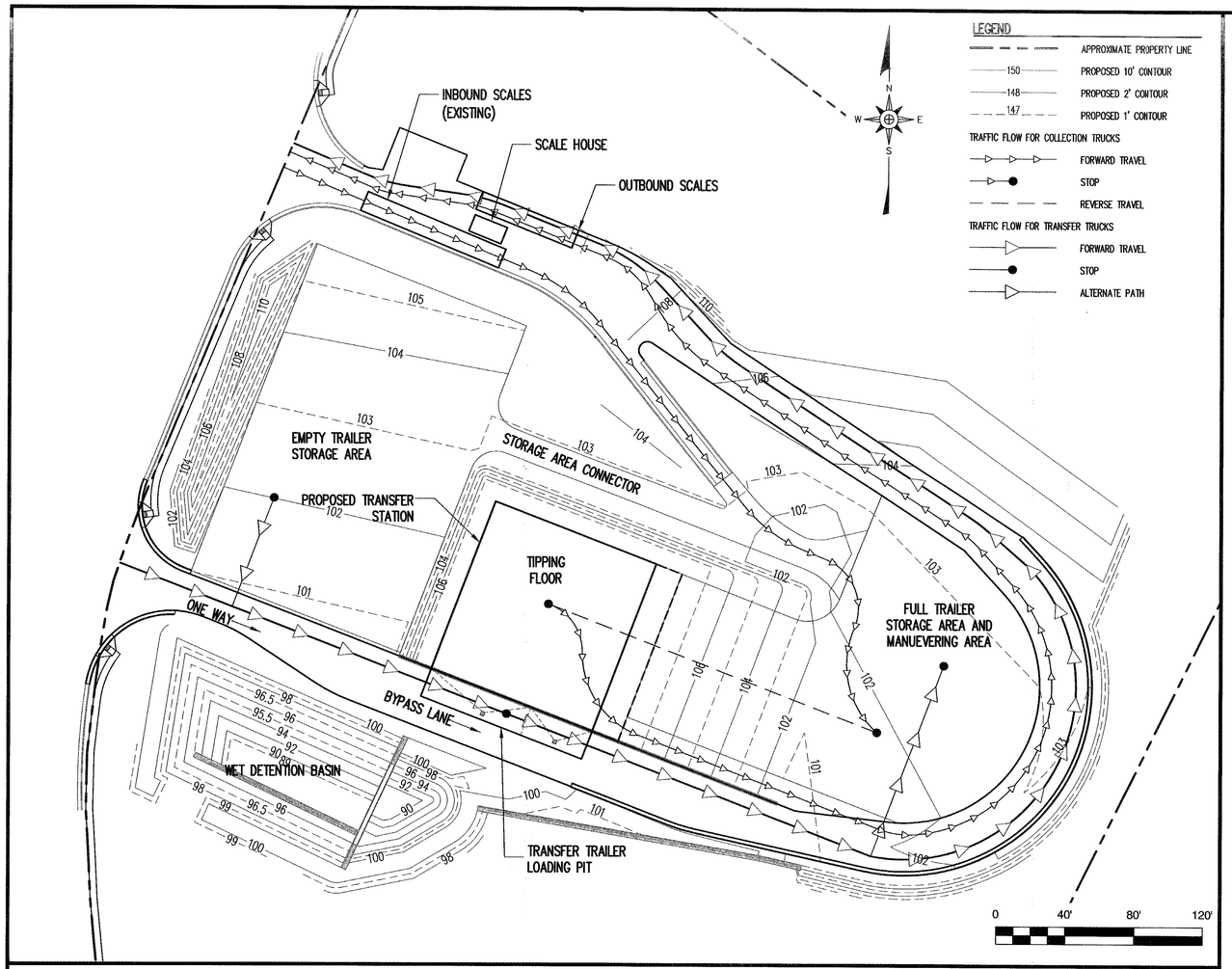

TRAFFIC CIRCULATION

DETAIL 1 / D2 — NOT TO SCALE

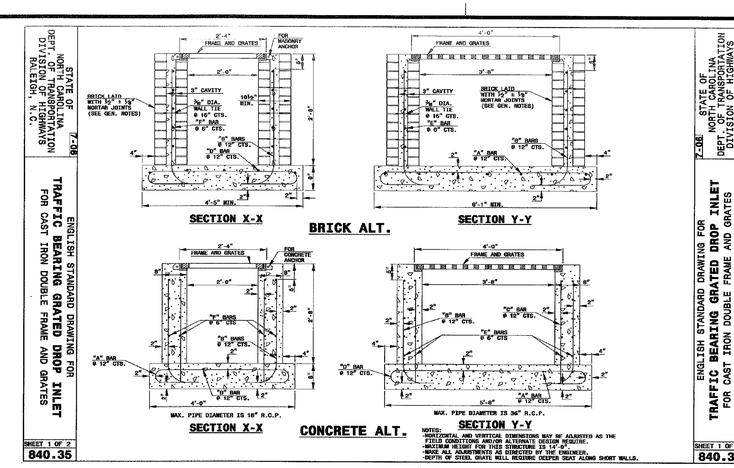

NCDOT 840.35 (1 OF 2) TRAFFIC BEARING GRATED DROP INLET

DETAIL 2 / D2 — NOT TO SCALE

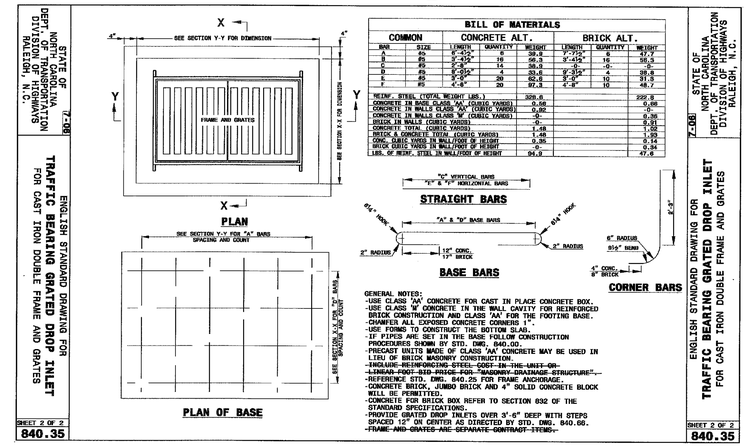

NCDOT 840.35 (2 OF 2) TRAFFIC BEARING GRATED DROP INLET

DETAIL 3 / D2 — NOT TO SCALE

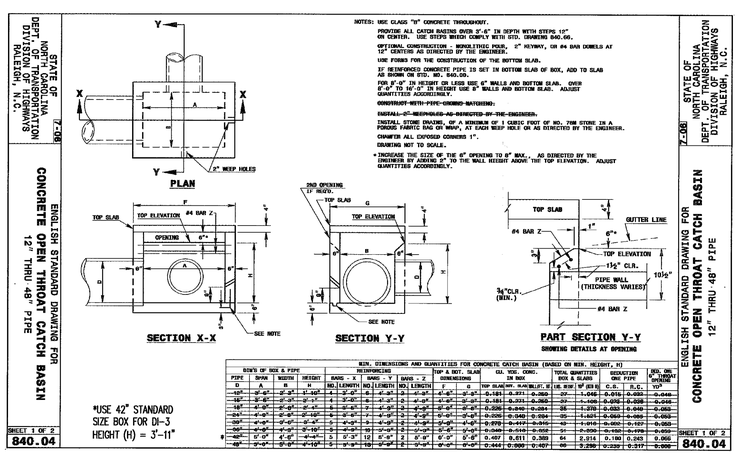

NCDOT 840.04 (1 OF 2) CONCRETE OPEN THROAT CATCH BASIN

DETAIL 4 / D2 — NOT TO SCALE

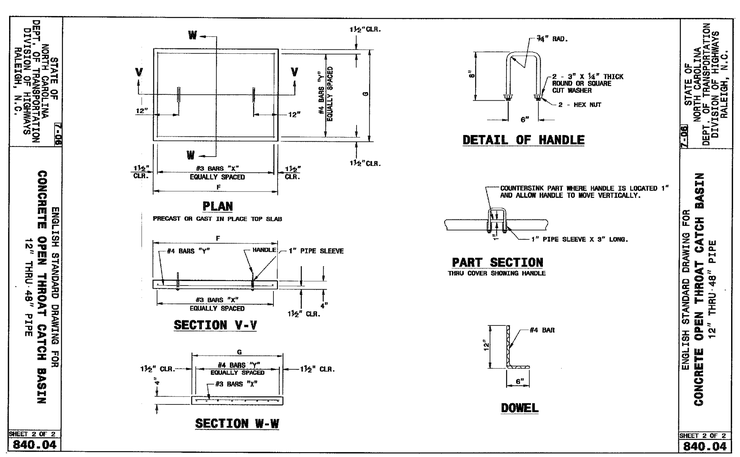

DOT 840.04 (2 OF 2) CONCRETE OPEN THROAT CATCH BASIN

DETAIL 5 / D2 — NOT TO SCALE

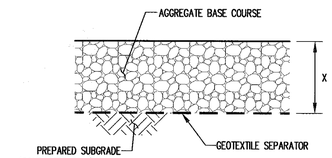

LOCATION:	X (INCHES):
EMPTY TRAILER STORAGE AREA	10"
ALL OTHER	14"

GRAVEL SURFACE AREA

DETAIL 6 / D2 — NOT TO SCALE

CONSTRUCTION NOTE:
ALL CONSTRUCTION TO BE IN ACCORDANCE WITH ALL CITY OF FAYETTEVILLE STANDARDS AND SPECIFICATIONS.

SAFETY NOTE:
THE CONTRACTOR IS SOLELY RESPONSIBLE FOR SITE SAFETY ASSOCIATED WITH THE WORK UNDER THIS CONTRACT AND FOR COMPLIANCE WITH ALL FEDERAL, STATE AND LOCAL HEALTH AND SAFETY LAWS, CODES, REGULATIONS, AND ORDINANCES INCLUDING BUT NOT LIMITED TO THOSE CURRENTLY MANDATED BY THE OCCUPATIONAL SAFETY AND HEALTH ADMINISTRATION (OSHA).

FOR REGULATORY REVIEW ONLY

NOT FOR BIDDING OR CONSTRUCTION

NO.	DATE	REVISION

RICHARDSON SMITH GARDNER & ASSOCIATES
14 N. Boylan Ave. Raleigh, N.C. 27603
ph: 919-828-0577
fax: 919-828-3899
www.rsgengineers.com

SEAL

PROJECT TITLE: CITY OF FAYETTEVILLE TRANSFER STATION PERMIT TO CONSTRUCT DRAWINGS

DRAWING TITLE: STANDARD DETAILS/ TRAFFIC CIRCULATION

DESIGNED BY: TBM	DRAWN BY: WRB
CHECKED BY:	PROJECT NO.: FAYETTE 09-11
SCALE: AS SHOWN	DATE: MAR 2009
FILE NAME: WI-D0568	
SHEET NO. 6	DRAWING NO. D2

C:\CADD\Waste Industries\Fayetteville 07-1\sheets\WI-D0568.dwg - 3/31/2009 10:55 AM

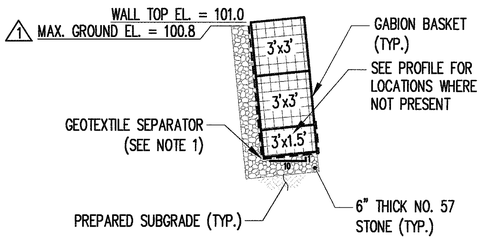

SECTION A–A

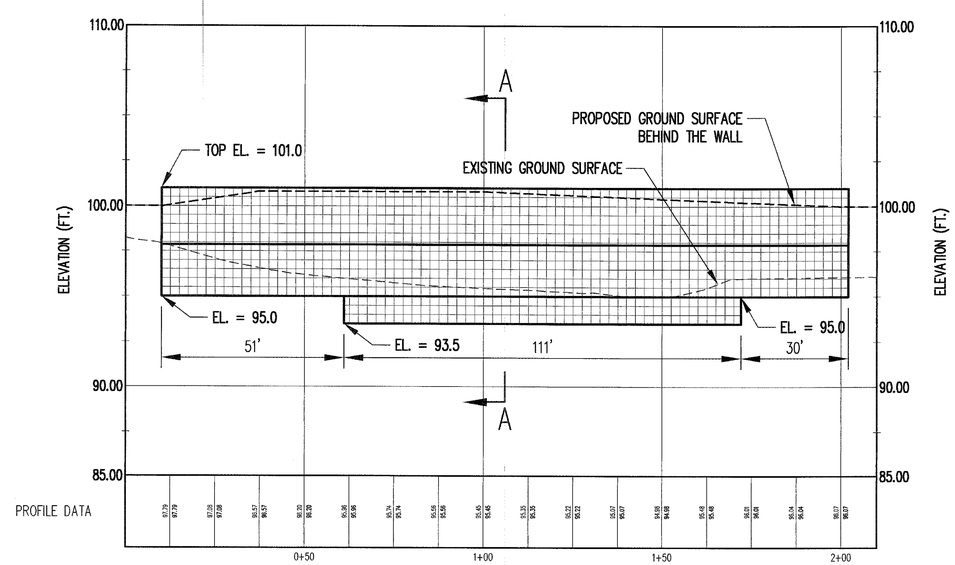

GABION RETAINING WALL

DETAIL 1/D3

FOR REGULATORY REVIEW ONLY

NOT FOR BIDDING OR CONSTRUCTION

SAFETY NOTE:

THE CONTRACTOR IS SOLELY RESPONSIBLE FOR SITE SAFETY ASSOCIATED WITH THE WORK UNDER THIS CONTRACT AND FOR COMPLIANCE WITH ALL FEDERAL, STATE AND LOCAL HEALTH AND SAFETY LAWS, CODES, REGULATIONS, AND ORDINANCES INCLUDING BUT NOT LIMITED TO THOSE CURRENTLY MANDATED BY THE OCCUPATIONAL SAFETY AND HEALTH ADMINISTRATION (OSHA).

CONSTRUCTION NOTE:

ALL CONSTRUCTION TO BE IN ACCORDANCE WITH ALL CITY OF FAYETTEVILLE STANDARDS AND SPECIFICATIONS.

NOTE:

1. GEOTEXTILE SEPARATOR SHALL BE INSTALLED ON ALL GABION BASKET SURFACES THAT WOULD CONTACT SOIL OR STONE. NO GEOTEXTILE SEPARATOR SHALL BE INSTALLED ON SURFACES EXPOSED TO AIR OR WATER.

NO.	DATE	REVISION
	5/14/09	RESPONSE TO LOS COMMENTS

RICHARDSON SMITH GARDNER & ASSOCIATES
414N. Boylan Ave.
Raleigh, N.C. 27603
ph: 919-828-4577
fax: 919-828-3089
www.rsgengineers.com

SEAL

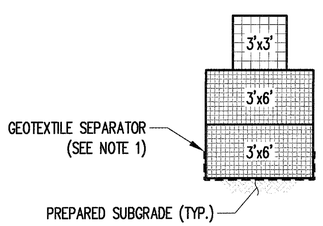

SECTION A–A

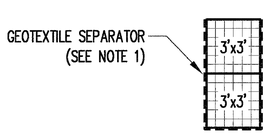

SECTION B–B

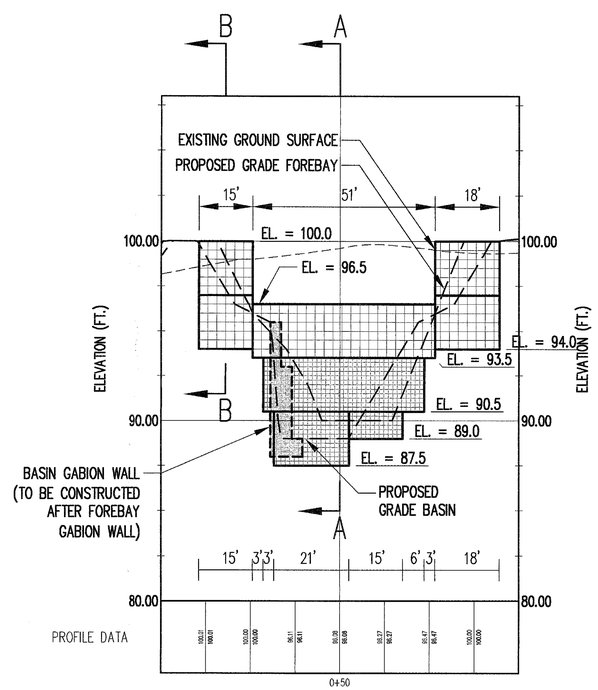

FOREBAY GABION WALL

DETAIL 2/D3

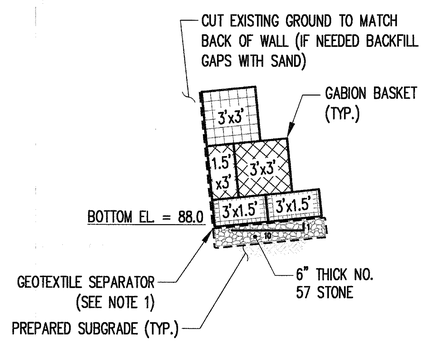

SECTION A–A

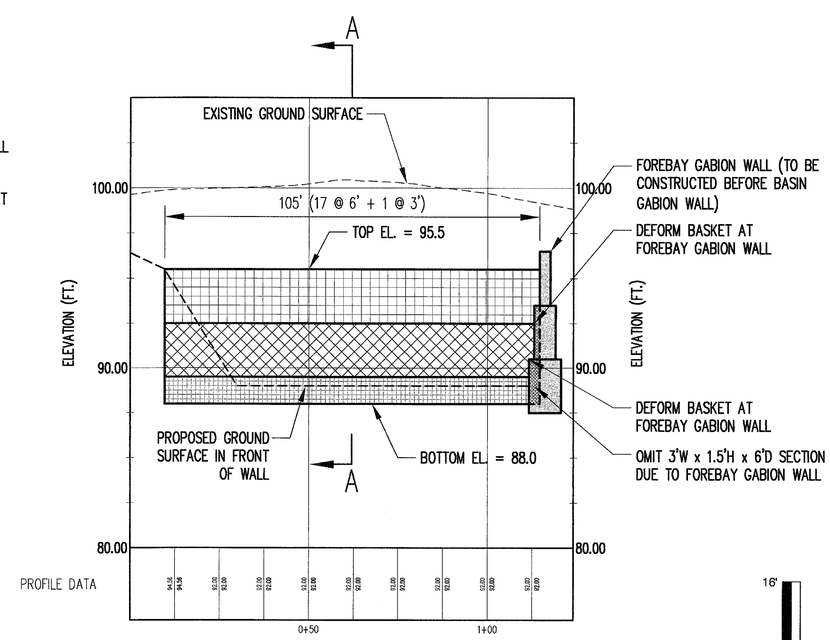

BASIN GABION WALL

DETAIL 3/D3

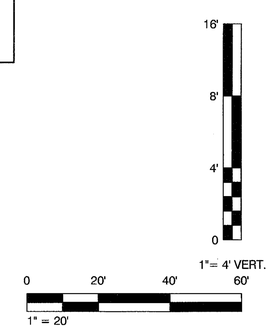

PROJECT TITLE: CITY OF FAYETTEVILLE TRANSFER STATION PERMIT TO CONSTRUCT DRAWINGS

DRAWING TITLE: GABION WALL DETAILS

DESIGNED BY: TBM	DRAWN BY: WRB
CHECKED BY:	PROJECT NO.: FAYETTE 09-11
SCALE: AS SHOWN	DATE: MAR 2009
FILE NAME: WI-D0569A	
SHEET NO. 7	DRAWING NO. D3

G:\CAD\Waste Industries\Fayetteville 07-1\revised 051409\sheets\WI-D0569A.dwg - 5/13/2009 3:14 PM

1 CONSTRUCTION-PHASE MAINTENANCE REQUIREMENTS FOR SEDIMENT BASIN

1. INSPECT SEDIMENT BASIN AT LEAST WEEKLY AND AFTER EACH SIGNIFICANT (1/2 INCH OR GREATER) RAINFALL EVENT AND REPAIR IMMEDIATELY.
2. IF SEDIMENT REACHES EL. 93.0 IN FOREBAY AND/OR BASIN, REMOVE SEDIMENT AND PLACE IN AN AREA WITH SEDIMENT CONTROLS.
3. FOR CONVERSION TO PERMANENT WET DETENTION BASIN: REMOVE SEDIMENT (PLACE IN AN AREA WITH SEDIMENT CONTROLS) AND RESTORE FOREBAY AND BASIN TO DESIGN DIMENSIONS; INSPECT EMBANKMENT, SPILLWAYS AND OUTLET FOR EROSION DAMAGE, PIPING AND SETTLEMENT; MAKE ALL NECESSARY REPAIRS IMMEDIATELY; REMOVE ALL TRASH AND DEBRIS FROM THE RISER AND POOL AREA.

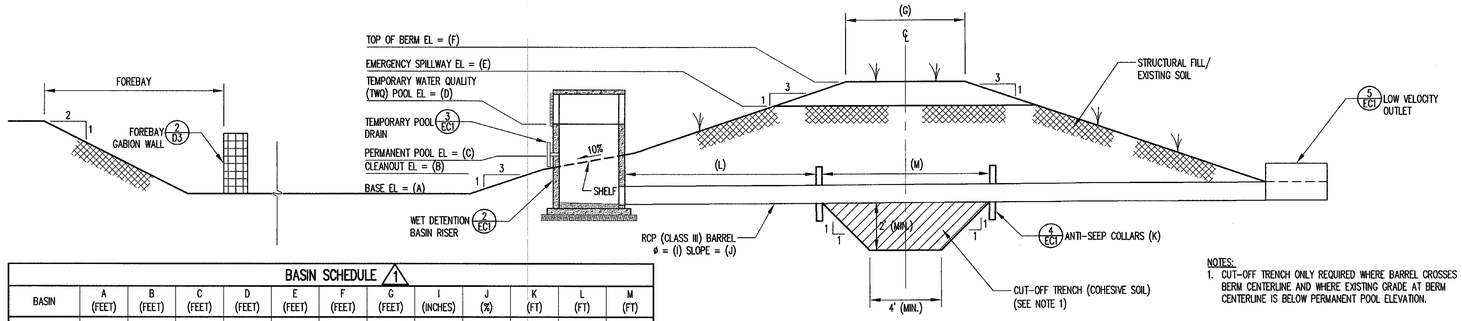

NOTES:
1. CUT-OFF TRENCH ONLY REQUIRED WHERE BARREL CROSSES BERM CENTERLINE AND WHERE EXISTING GRADE AT BERM CENTERLINE IS BELOW PERMANENT POOL ELEVATION.

BASIN SCHEDULE 1												
BASIN	A (FEET)	B (FEET)	C (FEET)	D (FEET)	E (FEET)	F (FEET)	G (FEET)	I (INCHES)	J (%)	K (FT)	L (FT)	M (FT)
WDB	89.0	93.0+	96.0	97.3	98.9	100.3	8' (MIN.)*	18	1.0	4.25x4.25	60	20

*BERM WIDTH = 10.0' AT EL. 100.0.
+TEMPORARY SEDIMENT BASIN CLEANOUT EL = 93.0 (APPLIES TO FOREBAY ALSO), PERMANENT WET DETENTION BASIN CLEANOUT EL = 90.0, PERMANENT FOREBAY CLEANOUT = 91.0.

WET DETENTION BASIN – TYPICAL CROSS SECTION

DETAIL 1/EC1 NOT TO SCALE

FOR REGULATORY REVIEW ONLY

NOT FOR BIDDING OR CONSTRUCTION

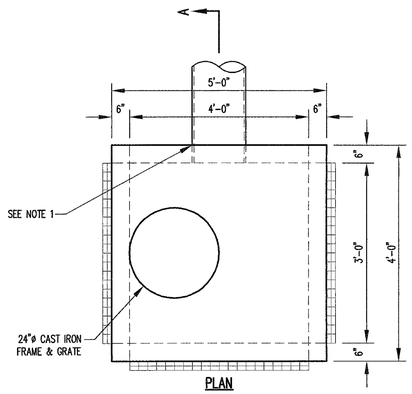

PLAN

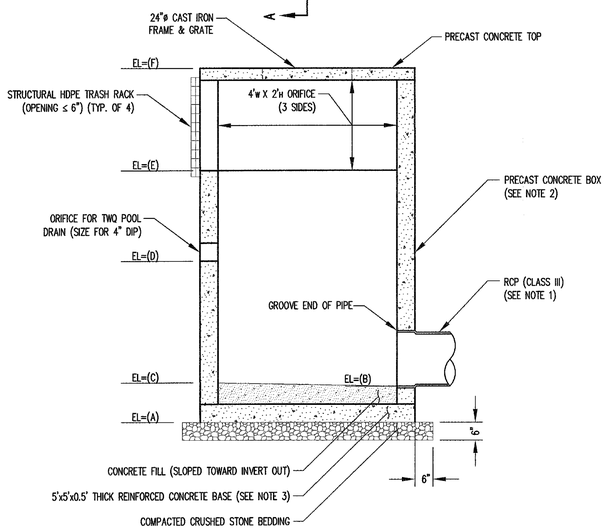

SECTION A–A

RISER SCHEDULE						
BASIN	A (FEET)	B (FEET)	C (FEET)	D (FEET)	E (FEET)	F (FEET)
WDB	94.5	95.8	95.9	96.0	97.3	99.63

NOTES:
1. PROVIDE WATERTIGHT JOINTS ON ALL PIPING.
2. PRECAST CONCRETE BOXES SHALL CONFORM TO THE FOLLOWING REQUIREMENTS:
   A. CONCRETE: COMPRESSIVE STRENGTH 4000 PSI
   B. REINFORCING: ASTM A–615, GRADE 60
   C. MEETS H–20 LOADING.
3. BASE MUST BE PHYSICALLY ATTACHED OR INTEGRATED INTO THE DESIGN OF THE RISER STRUCTURE.

WET DETENTION BASIN RISER

DETAIL 2/EC1 NOT TO SCALE

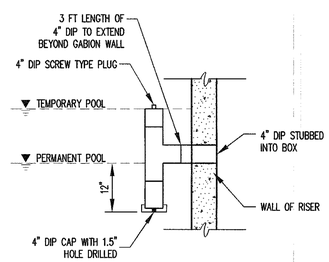

TEMPORARY POOL DRAIN DETAIL

DETAIL 3/EC1 NOT TO SCALE

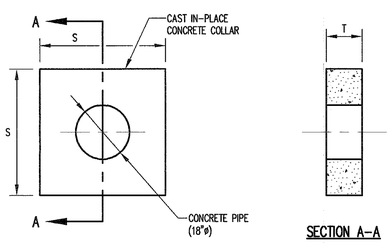

SECTION A–A

BLOCK AND COLLAR SCHEDULE		
	S (FT)	T (IN)
ANTI-FLOTATION BLOCK	3.00	24
ANTI-SEEP COLLAR	4.25	6

ANTI-SEEP COLLAR/ANTI-FLOTATION BLOCK

DETAIL 4/EC1 NOT TO SCALE

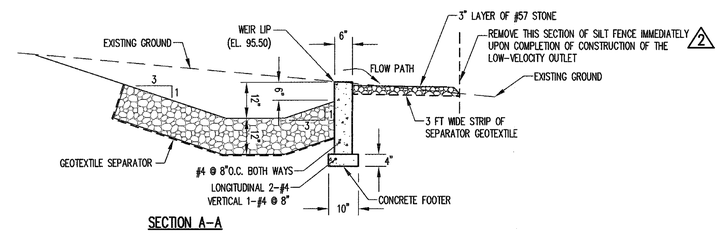

SECTION A–A

NOTES:
1. PROVIDE WATERTIGHT JOINTS ON ALL PIPING.
2. PRECAST CONCRETE BOXES SHALL CONFORM TO THE FOLLOWING REQUIREMENTS:
   A. CONCRETE: COMPRESSIVE STRENGTH 4000 PSI.
   B. REINFORCING: ASTM A–615, GRADE 60.
   C. MEETS H–20 LOADING.
3. STEPS SHALL HAVE A 16" SPACING THE FULL HEIGHT OF THE DROP INLET. START FIRST STEP 6" BELOW TOP.
4. EXTEND RIP–RAP 10 FEET FROM END OF PRECAST BOX.

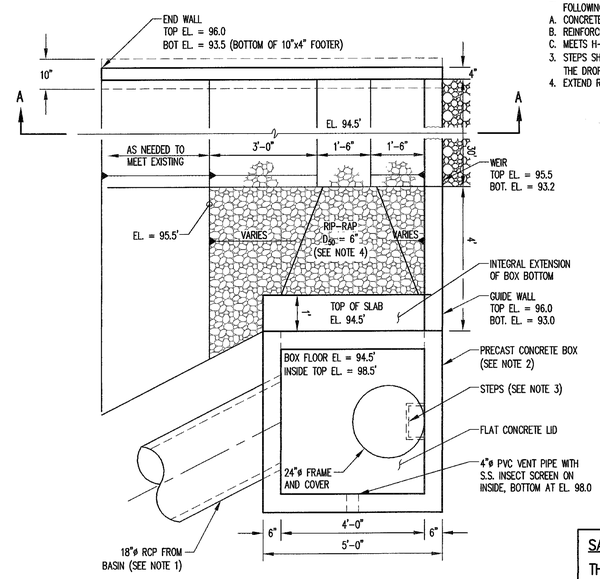

PLAN

LOW–VELOCITY OUTLET

DETAIL 5/EC1 NOT TO SCALE

CONSTRUCTION NOTE:
ALL CONSTRUCTION TO BE IN ACCORDANCE WITH ALL CITY OF FAYETTEVILLE STANDARDS AND SPECIFICATIONS.

SAFETY NOTE:
THE CONTRACTOR IS SOLELY RESPONSIBLE FOR SITE SAFETY ASSOCIATED WITH THE WORK UNDER THIS CONTRACT AND FOR COMPLIANCE WITH ALL FEDERAL, STATE AND LOCAL HEALTH AND SAFETY LAWS, CODES, REGULATIONS, AND ORDINANCES INCLUDING BUT NOT LIMITED TO THOSE CURRENTLY MANDATED BY THE OCCUPATIONAL SAFETY AND HEALTH ADMINISTRATION (OSHA).

NO.	DATE	REVISION
2	5/21/09	RESPONSE TO 5/15/09 LQS COMMENTS
1	5/14/09	RESPONSE TO 5/11/09 LQS COMMENTS

RICHARDSON SMITH GARDNER & ASSOCIATES
NC LIC. NO. C-0658 (Engineering)
14 N. Boylan Ave.
Raleigh, N.C. 27603
ph: 919-828-0577
fax: 919-828-3899
www.rsgengineers.com

SEAL

NORTH CAROLINA PROFESSIONAL SEAL 025801 ENGINEER THOMAS B. WALKER

PROJECT TITLE:
CITY OF FAYETTEVILLE
TRANSFER STATION
PERMIT TO CONSTRUCT DRAWINGS

DRAWING TITLE:
EROSION AND SEDIMENTATION CONTROL DETAILS (SHEET 1 OF 3)

DESIGNED BY: TBM	DRAWN BY: WRB
CHECKED BY:	PROJECT NO.: FAYETTE 09-11
SCALE: AS SHOWN	DATE: MAR 2009
FILE NAME: WI-D0564B	
SHEET NO.: 8	DRAWING NO.: EC1

G:\CAD\Waste Industries\Fayetteville (07-1)revised (052109)\sheets\WI-D0564B.dwg - 5/21/2009 9:33 AM

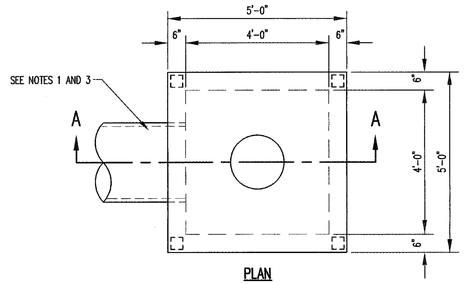

PLAN

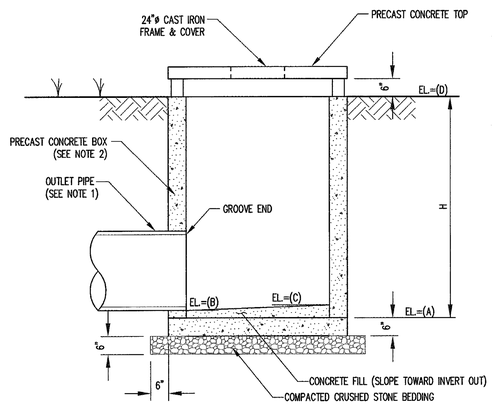

SECTION A–A

DROP INLET DI–1

DETAIL 1/EC2
NOT TO SCALE

DROP INLET SCHEDULE					
DROP INLET	A (FEET)	B (FEET)	C (FEET)	D (FEET)	H (FEET)
DI–1	98.6	98.9	99.1	101.6	3.0
DI–2	97.5	97.8	97.9	100.8	3.3
DI–3	97.0	97.3	97.4	100.6	3.6

NOTES:
1. PROVIDE WATERTIGHT JOINTS ON ALL PIPING.
2. PRECAST CONCRETE BOXES SHALL CONFORM TO THE FOLLOWING REQUIREMENTS:
   A. CONCRETE: COMPRESSIVE STRENGTH 4000 PSI
   B. REINFORCING: ASTM A–615, GRADE 60
   C. MEETS H–20 LOADING (HS–20 FOR DI–2).
3. PIPES MAY BE ORIENTED DIFFERENTLY WITH RESPECT TO THE THE DROP INLET THAN DISPLAYED HERE. SEE DRAWING S2 FOR PROPER ORIENTATION.
4. THE CONTRACTOR SHALL PROVIDE ADEQUATE PROTECTION FROM SEDIMENTATION FOR ALL DROP INLETS USING GRAVEL AND WIRE MESH FILTERS OR OTHER METHOD AS APPROVED BY THE ENGINEER.
5. FOR DI–2, PROVIDE TWO CAST IRON FRAMES AND GRATES, HS–20 LOAD RATING, WITH TOTAL MINIMUM OPEN AREA OF 2.7 S.F., NOMINAL GRATE SIZE IS 1.5'x2.0'.
6. DI–2 SHALL CONFORM TO NCDOT STANDARD DRAWING 840.55 (SEE SHEET D2) FOR TRAFFIC BEARING GRATED DROP INLET (CONCRETE) (EXCEPT SECTION Y–Y INSIDE DIMENSION = 5'–0".
7. DI–3 SHALL CONFORM TO NCDOT STANDARD DRAWING 840.40 (SEE SHEET D2) FOR CONCRETE OPEN THROAT CATCH BASIN WITH DIMENSIONS AS SHOWN FOR D=42" (EXCEPT H = 3'–11").

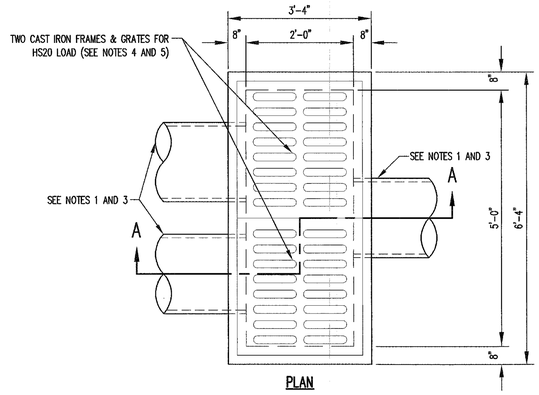

PLAN

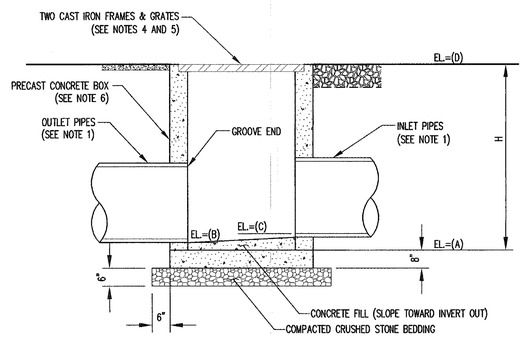

SECTION A–A

DROP INLET DI–2

DETAIL 2/EC2
NOT TO SCALE

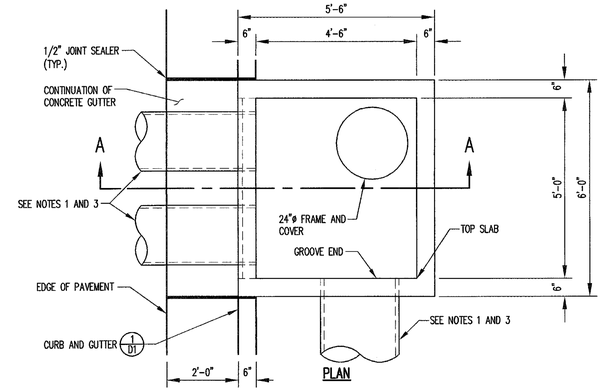

PLAN

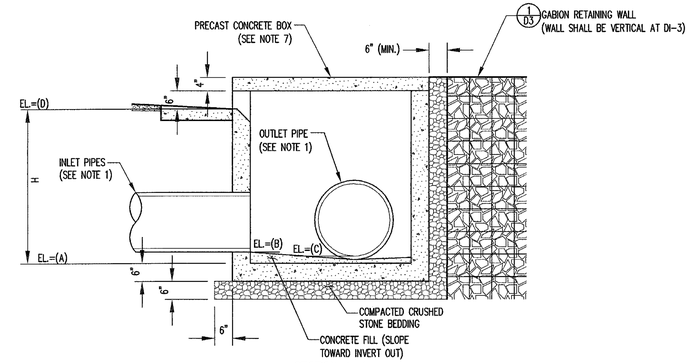

SECTION A–A

DROP INLET DI–3

DETAIL 3/EC2
NOT TO SCALE

CONSTRUCTION SPECIFICATIONS:
1. UNIFORMLY GRADE A SHALLOW DEPRESSION APPROACHING THE INLET.
2. DRIVE 5–FOOT STEEL POSTS 2 FEET INTO THE GROUND SURROUNDING THE INLET. SPACE POSTS EVENLY AROUND THE PERIMETER OF THE INLET, A MAXIMUM OF 4 FEET APART.
3. SURROUND THE POSTS WITH WIRE MESH HARDWARE CLOTH. SECURE THE WIRE MESH TO THE STEEL POST AT THE TOP, MIDDLE, AND BOTTOM. PLACING A 2–FOOT FLAP OF THE WIRE MESH UNDER THE GRAVEL FOR ANCHORING IS RECOMMENDED.
4. PLACE CLEAN GRAVEL (NC DOT #5 OR #57 STONE) ON A 2:1 SLOPE WITH A HEIGHT OF 16 INCHES AROUND THE WIRE, AND SMOOTH TO AN EVEN GRADE.
5. ONCE THE CONTRIBUTING DRAINAGE ARE HAS BEEN STABILIZED, REMOVE ACCUMULATED SEDIMENT, AND ESTABLISH FINAL GRADING ELEVATIONS.
6. COMPACT THE AREA PROPERLY AND STABILIZE IT.

MAINTENANCE:
1. INSPECT AT LEAST WEEKLY AND AFTER EACH SIGNIFICANT (½ INCH OR GREATER) RAINFALL EVENT. CLEAR THE MESH WIRE OF ANY DEBRIS OR OTHER OBJECTS TO PROVIDE ADEQUATE FLOW FOR SUBSEQUENT RAINS. TAKE CARE NOT TO DAMAGE OR UNDERCUT THE WIRE MESH DURING SEDIMENT REMOVAL. REPLACE STONE AS NEEDED.

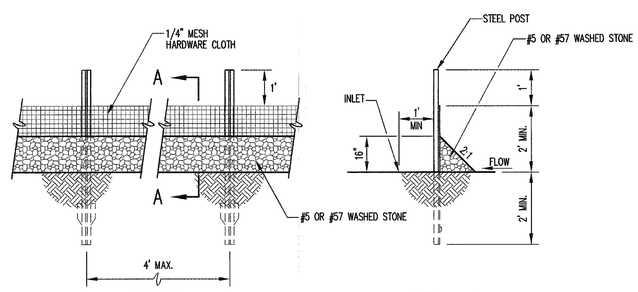

ELEVATION

SECTION A–A

HARDWARE CLOTH AND GRAVEL INLET PROTECTION
(APPLIES TO DI–1, DI–2, AND DI–3)

DETAIL 4/EC2
NOT TO SCALE

CONSTRUCTION NOTE:
ALL CONSTRUCTION TO BE IN ACCORDANCE WITH ALL CITY OF FAYETTEVILLE STANDARDS AND SPECIFICATIONS.

SAFETY NOTE:
THE CONTRACTOR IS SOLELY RESPONSIBLE FOR SITE SAFETY ASSOCIATED WITH THE WORK UNDER THIS CONTRACT AND FOR COMPLIANCE WITH ALL FEDERAL, STATE AND LOCAL HEALTH AND SAFETY LAWS, CODES, REGULATIONS, AND ORDINANCES INCLUDING BUT NOT LIMITED TO THOSE CURRENTLY MANDATED BY THE OCCUPATIONAL SAFETY AND HEALTH ADMINISTRATION (OSHA).

FOR REGULATORY REVIEW ONLY

NOT FOR BIDDING OR CONSTRUCTION

NO.	DATE	REVISION
2	5/21/09	RESPONSE TO 5/15/09 LQS COMMENTS
1	5/14/09	RESPONSE TO 5/11/09 LQS COMMENTS

RICHARDSON SMITH GARDNER & ASSOCIATES
NC L.C. NO. C-0658 (engineering)
14 N. Boylan Ave. Raleigh, N.C. 27603
ph: 919-828-0577
fax: 919-828-3899
www.rsgengineers.com

SEAL

NORTH CAROLINA PROFESSIONAL SEAL 022671 ENGINEER THOMAS B. WHITE

PROJECT TITLE: CITY OF FAYETTEVILLE TRANSFER STATION PERMIT TO CONSTRUCT DRAWINGS

DRAWING TITLE: EROSION AND SEDIMENTATION CONTROL DETAILS (SHEET 2 OF 3)

DESIGNED BY: TBM	DRAWN BY: WRB
CHECKED BY:	PROJECT NO.: FAYETTE 09-11
SCALE: AS SHOWN	DATE: MAR 2009
FILE NAME: WI-D0565B	
SHEET NO. 9	DRAWING NO. EC2

G:\CAD\Waste Industries\Fayetteville 07-11revised 052109sheets\WI-D0565B.dwg - 5/21/2009 9:50 AM

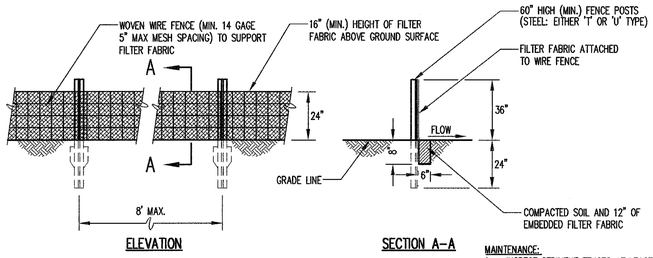

ELEVATION

SECTION A-A

MAINTENANCE:
1. INSPECT SEDIMENT FENCES AT LEAST ONCE A WEEK AND AFTER EACH RAINFALL. MAKE ANY REQUIRED REPAIRS IMMEDIATELY.
2. SHOULD THE FABRIC OF A SEDIMENT FENCE COLLAPSE , TEAR, DECOMPOSE OR BECOME INEFFECTIVE, REPLACE IT PROMPTLY.
3. REMOVE SEDIMENT DEPOSITS AS NECESSARY TO PROVIDE ADEQUATE STORAGE VOLUME FOR THE NEXT RAIN AND TO REDUCE PRESSURE ON THE FENCE. TAKE CARE TO AVOID UNDERMINING THE FENCE DURING CLEANOUT.
4. REMOVE ALL FENCING MATERIALS AND UNSTABLE SEDIMENT DEPOSITS AND BRING THE AREA TO GRADE AND STABILIZE IT AFTER THE CONTRIBUTING DRAINAGE AREA HAS BEEN PROPERLY STABILIZED.

SILT FENCE

2 DETAIL 1/EC3
NOT TO SCALE

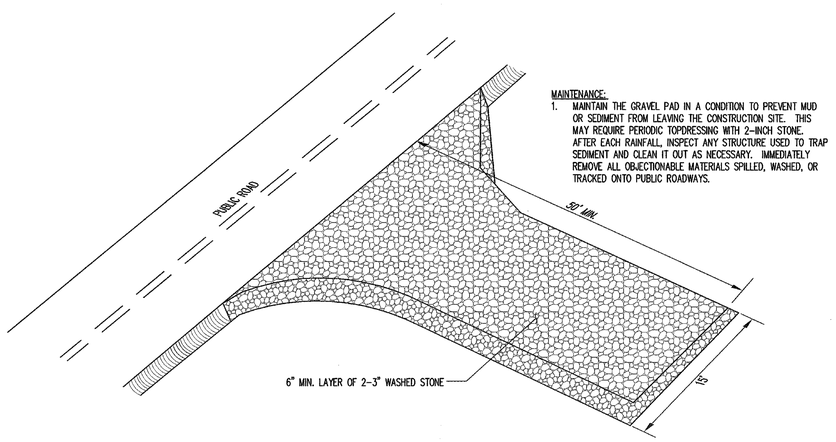

MAINTENANCE:
1. MAINTAIN THE GRAVEL PAD IN A CONDITION TO PREVENT MUD OR SEDIMENT FROM LEAVING THE CONSTRUCTION SITE. THIS MAY REQUIRE PERIODIC TOPDRESSING WITH 2-INCH STONE. AFTER EACH RAINFALL, INSPECT ANY STRUCTURE USED TO TRAP SEDIMENT AND CLEAN IT OUT AS NECESSARY. IMMEDIATELY REMOVE ALL OBJECTIONABLE MATERIALS SPILLED, WASHED, OR TRACKED ONTO PUBLIC ROADWAYS.

TEMPORARY GRAVEL CONSTRUCTION ENTRANCE

2 DETAIL 3/EC3
NOT TO SCALE

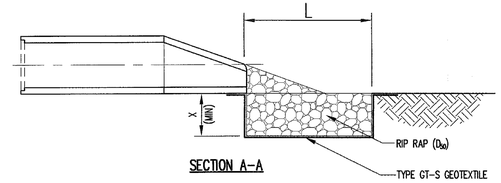

SECTION A-A

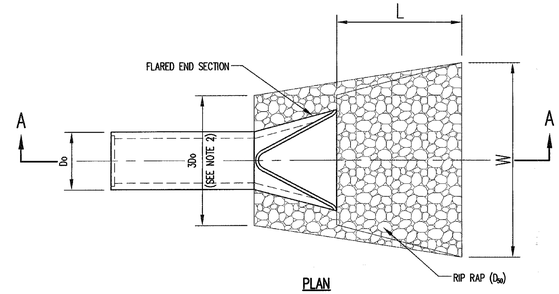

PLAN

NOTE:
1. D_{50} REFERS TO THE MINIMUM REQUIRED AVERAGE STONE SIZE.
2. FOR MORE THAN ONE PIPE, EXTEND RIP RAP 1.0' MIN. BEYOND OUTSIDE EDGES OF PIPES.

MAINTENANCE:
1. INSPECT RIPRAP OUTLET STRUCTURES AFTER HEAVY RAINS TO SEE IF ANY EROSION AROUND OR BELOW THE RIPRAP HAS TAKEN PLACE OR IF STONES HAVE BEEN DISLODGED. IMMEDIATELY MAKE ALL NEEDED REPAIRS TO PREVENT FURTHER DAMAGE.

RIP RAP OUTLET PROTECTION					
PIPE/OUTLET	D_{50}(IN)	L (FT)	W (FT)	X (IN)	D_{50} (IN)
C-3	30	10	10	8	4

RIP RAP OUTLET PROTECTION

2 DETAIL 2/EC3
NOT TO SCALE

2

PERMANENT SEEDING SCHEDULE		
MATERIAL	SEED TYPE	APPLICATION RATE
LIME	–	4,000 LBS/ACRE
FERTILIZER	–	1,000 LBS/ACRE
SEED	TALL FESCUE PENSACOLA BAHIAGRASS SERICEA LESPEDEZA KOBE LESPEDEZA COMMON BERMUDA SEASONAL NURSE CROP	80 LBS/ACRE 50 LBS/ACRE 30 LBS/ACRE 10 LBS/ACRE 25 LBS/ACRE
MULCH	–	4,000–5,000 LBS/ACRE
BINDER	–	150 GALLONS/ACRE

SEEDING NOTES:
1. APPLICATION RATES AND/OR CHEMICAL ANALYSIS SHALL BE CONFIRMED OR ESTABLISHED BY A SOIL TEST.
2. FROM SEPTEMBER 1 – MARCH 1, USE UNSCARIFIED SERICEA SEED.
3. USE HULLED BERMUDA SEED FROM APRIL THROUGH OCTOBER AND UNHULLED BERMUDA SEED FROM NOVEMBER THROUGH MARCH.
4. USE SEASONAL NURSE CROP IN ACCORDANCE WITH SEEDING DATES AS STATED BELOW:
   APRIL 15 – AUGUST 15 — 10 LBS/ACRE GERMAN MILLET OR 15 LBS/ACRE SUDANGRASS
   AUGUST 16 – APRIL 14 — 25 LBS/ACRE RYE (GRAIN)

MAINTENANCE:
1. THE CONTRACTOR SHALL BE RESPONSIBLE FOR THE SATISFACTORY ESTABLISHMENT AND GROWTH OF A PERMANENT STAND OF VEGETATION FOR A PERIOD OF ONE YEAR FOLLOWING THE FINAL SEEDING AS JUDGED BY THE ENGINEER. DURING THIS PERIOD, THE CONTRACTOR SHALL BE RESPONSIBLE FOR THE MAINTENANCE ITEMS DESCRIBED BELOW.
2. THE CONTRACTOR SHALL BE RESPONSIBLE FOR MAINTAINING ALL SEEDED AREAS THROUGH THE END OF HIS WARRANTY PERIOD. THE CONTRACTOR SHALL PROVIDE, AT HIS EXPENSE, PROTECTION OF ALL SEEDED AREAS AGAINST DAMAGE AT ALL TIMES UNTIL ACCEPTANCE OF THE WORK. MAINTENANCE SHALL INCLUDE, BUT NOT BE LIMITED TO, THE FOLLOWING ITEMS:
A. REGRADE AND REVEGETATE ALL ERODED AREAS UNTIL ADEQUATELY STABILIZED BY GRASS.
B. REMULCH WITH NEW MULCH IN AREAS WHERE MULCH HAS BEEN DISTURBED BY WIND OR MAINTENANCE OPERATIONS SUFFICIENTLY TO NULLIFY ITS PURPOSE. ANCHOR AS REQUIRED TO PREVENT DISPLACEMENT.
C. REPLANT BARE AREAS USING SAME MATERIALS SPECIFIED.

TEMPORARY SEEDING SCHEDULE			
SEEDING DATES	MATERIAL	SEED TYPE	APPLICATION RATE
	LIME	–	2,000 LBS/ACRE
	FERTILIZER	10–10–10	750 LBS/ACRE
DEC. 1 – APR 15	SEED	RYE (GRAIN KOBE LESPEDEZA	120 LBS/ACRE 50 LBS/ACRE
APR 15 – AUG 15	SEED	GERMAN MILLET	40 LBS/ACRE
AUG 15 – DEC 1	SEED	RYE (GRAIN)	120 LBS/ACRE
	MULCH	–	4,000 LBS/ACRE
	BINDER	–	150 GALLONS/ACRE

MAINTENANCE:
1. RESEED AND MULCH AREA WHERE SEEDING EMERGENCE IS POOR, OR WHEN EROSION OCCURS, AS SOON AS POSSIBLE. DO NOT MOW. PROTECT FROM TRAFFIC AS MUCH AS POSSIBLE.

CONSTRUCTION NOTE:
ALL CONSTRUCTION TO BE IN ACCORDANCE WITH ALL CITY OF FAYETTEVILLE STANDARDS AND SPECIFICATIONS.

SAFETY NOTE:
THE CONTRACTOR IS SOLELY RESPONSIBLE FOR SITE SAFETY ASSOCIATED WITH THE WORK UNDER THIS CONTRACT AND FOR COMPLIANCE WITH ALL FEDERAL, STATE AND LOCAL HEALTH AND SAFETY LAWS, CODES, REGULATIONS, AND ORDINANCES INCLUDING BUT NOT LIMITED TO THOSE CURRENTLY MANDATED BY THE OCCUPATIONAL SAFETY AND HEALTH ADMINISTRATION (OSHA).

FOR REGULATORY REVIEW ONLY

NOT FOR BIDDING OR CONSTRUCTION

NO.	DATE	REVISION
2	5/21/09	RESPONSE TO 5/15/09 LOS COMMENTS

RICHARDSON SMITH GARDNER & ASSOCIATES
NC LIC. NO. C-0658 (Engineering)
14 N. Boylan Ave.
Raleigh, N.C. 27603
ph: 919-828-0577
fax: 919-828-3899
www.rsgengineers.com

SEAL

SEAL

PROJECT TITLE:
CITY OF FAYETTEVILLE
TRANSFER STATION
PERMIT TO CONSTRUCT DRAWINGS

DRAWING TITLE:
EROSION AND SEDIMENTATION CONTROL DETAILS (SHEET 3 OF 3)

DESIGNED BY: TBM	DRAWN BY: WRB
CHECKED BY:	PROJECT NO.: FAYETTE 09-11
SCALE: AS SHOWN	DATE: MAY 2009
FILE NAME: WI-D0578	
SHEET NO. 10	DRAWING NO. EC3

G:\CAD\Waste Industries\Fayetteville 07-1\revised 052109\sheets\WI-D0578.dwg - 5/21/2009 9:49 AM