INTERNATIONAL PAPER

RIEGELWOOD, NORTH CAROLINA
INDUSTRIAL LANDFILL CELL 2
LINER SYSTEM DRAWINGS
PERMIT ISSUE
JULY 2010

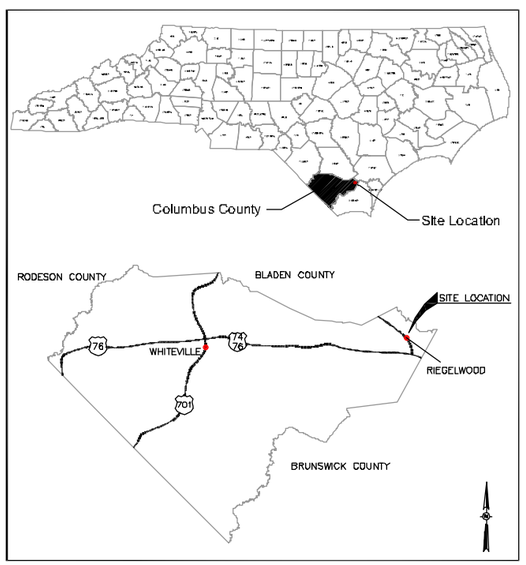

VICINITY MAP
NOT TO SCALE

SHEET NO.	DRAWING NO.	DRAWING TITLE
1	1	TITLE/COVER SHEET
2	E1	SITE PLAN
3	E2	EXISTING CONDITIONS
4	E3	UNDERDRAIN LAYOUT AND PIPING
5	E4	BASE GRADES GRADING PLAN
6	E5	PROTECTIVE COVER GRADING PLAN
7	E6	LEACHATE MANAGEMENT PLAN
8	E7	FINAL COVER GRADING PLAN
9	E8	OPERATIONAL PLAN
10	G1	CROSS SECTIONS
11	G2	UNDERDRAIN DETAILS
12	G3	LINER AND PERIMETER BERM DETAILS
13	G4	LEACHATE MANAGEMENT DETAILS
14	G5	LEACHATE MANAGEMENT DETAILS
15	G6	FINAL COVER DETAILS
16	G7	DRAINAGE CHANNEL DETAILS
17	G8	SPILLWAY DETAILS
18	G9	EROSION & SEDIMENT CONTROL DETAILS
19	G10	UNDERDRAIN & LEACHATE FORCEMAIN DETAILS
20	G11	SUBGRADE CONTROL POINTS
21	G12	PROTECTIVE COVER CONTROL POINTS

FOR PERMIT PURPOSES NOT FOR CONSTRUCTION

REFERENCE DRAWINGS

DRAWING NO.	TITLE

NOTES:

NORTH CAROLINA PROFESSIONAL SEAL 26500 ENGINEER CONAN D. FITZGERALD

Certification:
This project was conducted under my direct and responsible charge.

Conan D. Fitzgerald, PE — URS Corporation–NC
26500 — PE Registration No.
7/6/2010 — Date

NO.	DATE	REVISIONS	DWN	CKD	APPD
2	5/2010	MODIFIED THE DATE	L.G.	R.L.	R.L.
1	12/2009	MODIFIED THE DATE	L.G.	R.L.	R.L.

DRAWN BY L.G.	4/2009 DATE DATE	CHECKED BY R.L.	4/23/2009 DATE DATE
DESIGNED BY L.G.	4/2009 DATE DATE	APPROVED BY	DATE DATE

CONFIDENTIAL-ALL RIGHTS RESERVED-PROPERTY OF
URS
RTP, NORTH CAROLINA 27560

INTERNATIONAL PAPER
RIEGELWOOD, NORTH CAROLINA

COPYRIGHT © INTERNATIONAL PAPER DATED

TECHNICAL - ENVIRONMENTAL
LINER SYSTEM DRAWINGS
RIEGELWOOD MILL LANDFILL CELL 2
TITLE/COVER SHEET
SHEET 1 OF 21

DR. BY: LG	SCALE: AS SHOWN	JOB #: 31826746	
ENG. BY: LG	DATE: DATE:	DRAWING NO. 1	REV. 2
PREV. DWG. #: N/A			
EDMS DOCUMENT			
IP CAD#: 080-0600.DWG			

LOCATION	N - COORDINATE	E - COORDINATE	ELEVATION
1	220181.6333	2240251.5360	12.0
2	220195.1506	2240260.0965	12.0
3	220184.4499	2240276.9931	12.0
4	220170.9326	2240268.4326	12.0
5	220207.5640	2240257.3050	15.0
6	220187.1986	2240289.3622	15.0
7	220158.4980	2240271.2230	15.0
8	220178.8451	2240239.1172	15.0
9	220191.8196	2240286.9258	16.0
10	220182.9541	2240289.9181	16.0
11	219976.0184	2240214.2720	16.0
12	220213.8862	2240229.7553	16.0
13	220276.6865	2240118.2331	16.0
14	220325.5957	2240053.7039	16.0
15	220335.7189	2240060.1654	16.0
16	220331.3474	2240050.2571	17.0
17	220382.6737	2239969.3757	17.0
18	220366.0741	2239959.0053	17.0
19	220388.3122	2239960.4903	17.0
20	220435.3422	2239886.4851	17.0
21	220445.4574	2239892.9414	17.0
22	220441.3276	2239883.1874	18.0
23	220483.7616	2239817.6815	18.0
24	220454.9432	2239799.6953	18.0
25	220493.7005	2239802.3386	18.0
26	220507.4286	2239781.1465	18.0
27	220507.2466	2239780.1839	18.0
28	220519.8745	2239784.0051	18.0
29	220517.9442	2239774.7038	18.0
30	220471.7364	2239726.3073	18.0
31	220481.9553	2239719.9916	18.0
32	220471.0282	2239719.6915	19.0
33	220426.3712	2239655.2051	19.0
34	220413.4009	2239630.7013	19.0
35	220364.9509	2239557.1903	19.0
36	220375.1814	2239550.8674	19.0
37	220361.1012	2239545.0838	20.0
38	220333.0232	2239494.2840	20.0
39	220294.8607	2239411.9976	20.0
40	220290.0188	2239400.8110	21.0
41	220268.4534	2239387.3395	21.0
42	220288.1865	2239388.6381	21.0
43	220288.6585	2239371.2164	20.0
44	220300.5012	2239369.2797	20.0
45	220290.7337	2239364.7973	21.0
46	220286.3861	2239339.7344	22.0
47	220286.3095	2239337.9953	22.0
48	220288.2782	2239310.0036	21.0
49	220281.2591	2239297.8796	21.0
50	220262.9598	2239280.1643	21.0
51	220272.3429	2239272.6839	21.0
52	220266.2197	2239260.2330	22.0
53	220227.4526	2239259.8340	22.0

LOCATION	N - COORDINATE	E - COORDINATE	ELEVATION
54	220184.5352	2239274.7181	22.0
55	220109.4062	2239294.4229	23.0
56	220104.9704	2239327.7957	22.0
57	220100.9896	2239340.5268	22.0
58	220073.6143	2239426.9400	22.0
59	220061.4272	2239475.2546	21.0
60	220056.1760	2239491.4848	21.0
61	220038.3283	2239537.7300	22.0
62	220026.5275	2239575.6480	22.0
63	220014.9228	2239623.6499	21.0
64	219995.3230	2239684.7138	21.0
65	219978.5309	2239737.5453	21.0
66	219966.0639	2239785.4965	20.0
67	219940.8973	2239865.4509	20.0
68	219930.2731	2239899.6047	20.0
69	219918.4155	2239947.5956	19.0
70	219906.0648	2239995.7549	18.0
71	219904.5794	2240000.4456	18.0
72	219886.9295	2240046.8179	19.0
73	219882.6303	2240060.5884	19.0
74	219870.1492	2240108.5357	18.0
75	219858.0784	2240157.8120	17.0
76	219853.4678	2240172.6674	17.0
77	220168.6430	2240349.4498	36.0
78	220205.9514	2240346.8900	36.0
79	220237.5351	2240326.8666	36.0
80	220297.7675	2240231.9508	36.0
81	220490.2845	2239928.5772	36.0
82	220571.2068	2239803.6609	36.0
83	220573.0302	2239774.1404	36.0
84	220564.1517	2239745.8985	36.0
85	220480.5192	2239622.8366	36.0
86	220467.2119	2239597.6959	36.0
87	220439.6083	2239558.4978	36.0
88	220411.7601	2239512.9162	36.0
89	220386.9491	2239467.8275	36.0
90	220352.5740	2239393.0065	36.0
91	220347.0753	2239354.6739	36.0
92	220345.0093	2239301.4977	36.0
93	220340.7414	2239286.4882	36.0
94	220325.6403	2239260.5747	36.0
95	220307.7401	2239244.8963	36.0
96	220286.9152	2239221.7383	36.0
97	220279.7862	2239219.4114	36.0
98	220220.4935	2239217.7934	36.0
99	220080.2459	2239266.4324	36.0
100	219948.0316	2239683.2543	36.0
101	219781.8814	2240209.8376	36.0
102	220329.5111	2240251.0720	36.0
103	220371.9889	2240296.5321	32.0
104	220410.1002	2240267.5506	30.0
105	220388.2244	2240418.4773	30.0
106	220385.5559	2240375.1669	30.0

LOCATION	N - COORDINATE	E - COORDINATE	ELEVATION
107	220337.7648	2240355.3725	34.0
108	220311.3421	2240363.8167	30.0
109	220252.6729	2240381.0912	36.0
110	220240.6743	2240386.1707	36.0
111	220203.8299	2240392.2523	36.0
112	220166.6906	2240388.0818	36.0
113	219722.2300	2240227.6417	36.0
114	220604.4647	2239820.3748	36.0
115	220610.2865	2239773.3638	36.0
116	220596.5601	2239728.0324	36.0
117	220512.3205	2239603.8265	36.0
118	220498.8152	2239578.3117	36.0
119	220470.5537	2239538.1795	36.0
120	220459.0694	2239512.4292	36.0
121	220450.6088	2239446.3540	36.0
122	220419.3778	2239449.6101	36.0
123	220388.1638	2239381.2954	36.0
124	220384.1767	2239354.2757	36.0
125	220381.8272	2239296.0112	36.0
126	220374.3131	2239270.3426	36.0
127	220355.5653	2239238.6110	36.0
128	220334.9917	2239219.7246	36.0
129	220317.7401	2239199.5913	36.0
130	220300.6215	2239187.1318	36.0
131	220280.0248	2239182.1529	36.0
132	220260.6228	2239180.7578	36.0
133	220208.1702	2239184.5521	38.0
134	220208.1409	2239215.7268	38.0
135	220148.0169	2239180.0112	36.0
136	220107.7931	2239193.4077	46.0
137	220107.7985	2239225.1240	46.0
138	220411.7237	2239374.6595	30.0
139	220436.5207	2239371.0366	30.0
140	220436.5576	2239286.7120	29.0
141	220445.0282	2239234.9476	30.0
142	220497.5308	2239384.2096	26.5
143	220474.1860	2239393.1802	29.0
144	220515.9506	2239493.7007	29.0
145	220538.3226	2239482.3887	26.0
146	220617.5097	2239581.9078	25.0
147	220596.3187	2239595.1791	28.5
148	220633.7057	2239658.1875	28.5
149	220639.1140	2239672.7609	28.5
150	220641.7789	2239702.8236	28.0
151	220656.3868	2239647.4497	25.5
152	220665.1434	2239669.1517	26.0
153	220666.8096	2239702.0641	27.5
154	220666.2532	2239784.0789	28.5
155	220662.1494	2239809.1289	28.5
156	220640.9461	2239785.1673	27.0
157	220627.5598	2239830.8893	27.0
158	220353.4720	2240235.6208	30.0

PERMIT PLANS

REFERENCE DRAWINGS

DRAWING NO.	TITLE

NOTES:

Certification:
This project was conducted under my direct and responsible charge.

NORTH CAROLINA PROFESSIONAL SEAL 26500 ENGINEER CONAN D. FITZGERALD

Conan D. Fitzgerald, PE
URS Corporation-NC

26500 PE Registration No.

7/6/2010 Date

NO.	DATE	REVISIONS	DWN	CKD	APPD
2	5/2010	MODIFIED THC CONTROL POINTS	L.G.	R.L.	R.L.
1	12/2009	MODIFIED THC DATE	L.G.	R.L.	R.L.

DRAWN BY L.G. 4/2009 DATE DATE
CHECKED BY RL. 4/23/2009 DATE DATE
DESIGNED BY L.G. 4/2009 DATE DATE
APPROVED BY DATE DATE

CONFIDENTIAL-ALL RIGHTS RESERVED-PROPERTY OF

URS
RALEIGH, NORTH CAROLINA 27560

INTERNATIONAL PAPER
RIEGELWOOD, NORTH CAROLINA

COPYRIGHT © INTERNATIONAL PAPER DATED

TECHNICAL - ENVIRONMENTAL
LINER SYSTEM DRAWINGS
RIEGELWOOD MILL LANDFILL CELL 2
SUBGRADE CONTROL POINTS
SHEET 20 OF 21

DR. BY: LG | SCALE: AS SHOWN | JOB #: 31826746
ENG. BY: LG | DATE: | DATE:
PREV. DWG. #: N/A
CDMS DOCUMENT
IP CAD#: 060-0800.DWG
DRAWING NO. G11
REV. 2

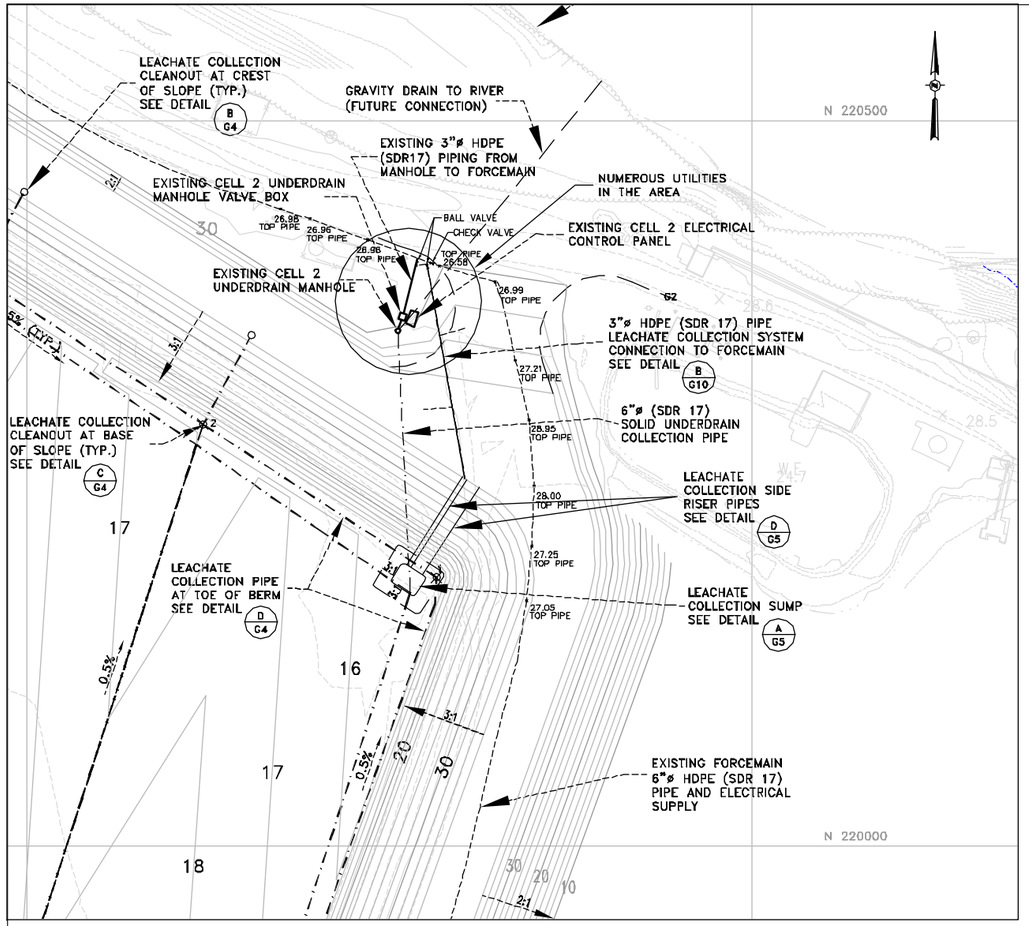

A/G10 SITE PLAN
SCALE: 1" = 50'

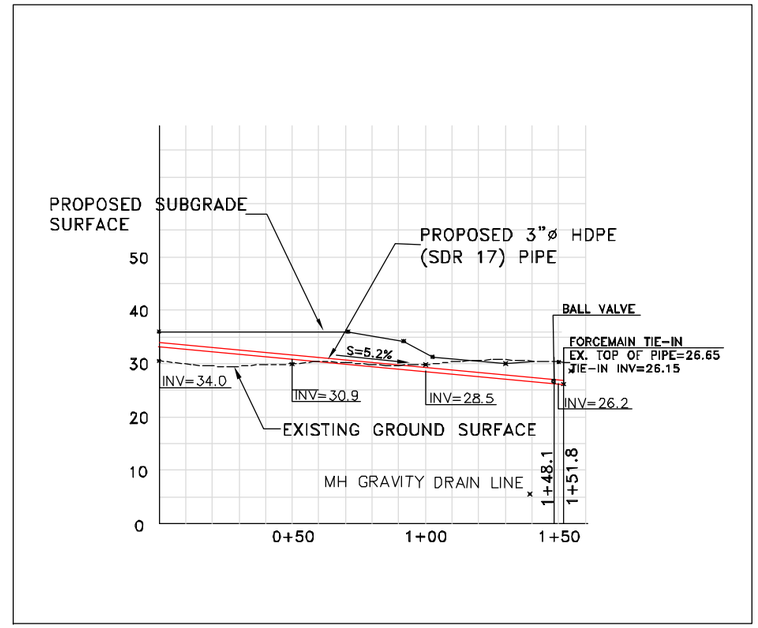

B/G10 CELL 2 LEACHATE COLLECTION SYSTEM FORCEMAIN
SCALE: 1" = 2'

PERMIT PLANS

REFERENCE DRAWINGS

DRAWING NO.	TITLE

Certification:
This project was conducted under my direct and responsible charge.

NORTH CAROLINA PROFESSIONAL SEAL 26500 ENGINEER CONAN D. FITZGERALD

Conan D. Fitzgerald, PE — PE Registration No. 26500 — Date 7/6/2010
URS Corporation—NC

NO.	DATE	REVISIONS	DWN	CKD	APPD
2	5/2010	MODIFIED THE EXISTING & SUBGRADE CONTOURS IN CELL 2	L.G.	R.L.	R.L.
1	12/2009	MODIFIED THE DATE	L.G.	R.L.	R.L.

DRAWN BY L.G. 4/2009	DATE DATE	CHECKED BY R.L. 4/23/2009	DATE DATE
DESIGNED BY L.G. 4/2009	DATE DATE	APPROVED BY	DATE DATE

CONFIDENTIAL-ALL RIGHTS RESERVED-PROPERTY OF
URS
RALEIGH, NORTH CAROLINA 27560

INTERNATIONAL PAPER
RIEGELWOOD, NORTH CAROLINA

COPYRIGHT © INTERNATIONAL PAPER DATED

TECHNICAL - ENVIRONMENTAL

LINER SYSTEM DRAWINGS
RIEGELWOOD MILL LANDFILL CELL 2
UNDERDRAIN & LEACHATE FORCEMAIN DETAILS
SHEET 19 OF 21

DR. BY: LG	SCALE: AS SHOWN	JOB #: 31826746	
ENG. BY: L.G.	DATE: DATE:	DRAWING NO. G10	REV. 2
PREV. DWG. #: N/A			
EDMS DOCUMENT			
IP CAD#: 080-0600.DWG			

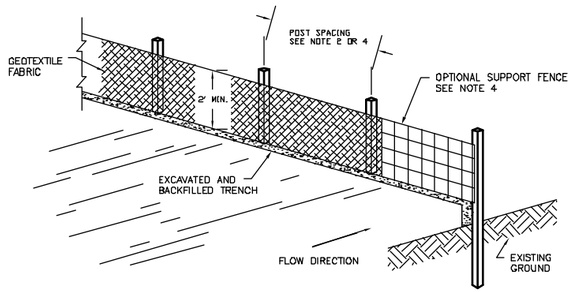

ISOMETRIC VIEW

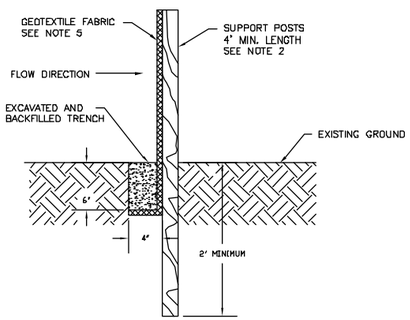

TYPICAL SECTION

SEE SHEET 5 OF 21 FOR LOCATION

A G9 SILT FENCE
NOT TO SCALE

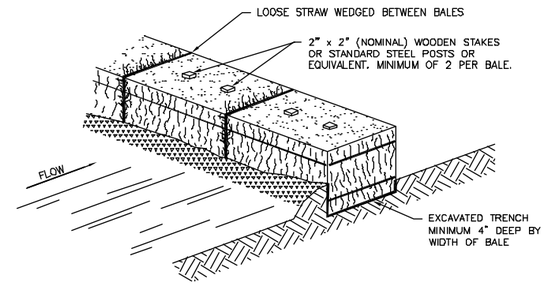

ISOMETRIC VIEW

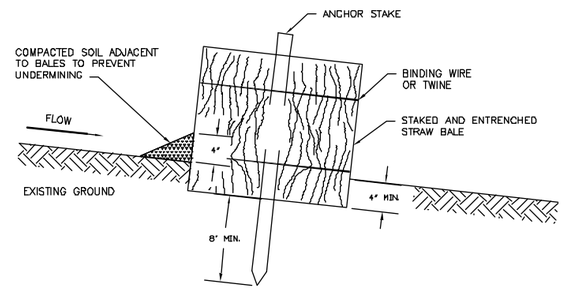

TYPICAL SECTION

NOTES:
1. TURN THE ENDS OF THE STRAW BALE SEDIMENT TRAP UPSLOPE 1 TO 2 FEET IN ELEVATION TO PREVENT FLANKING.
2. THE STRAW BALES SHALL BE BUTTED TOGETHER AS TIGHTLY AS POSSIBLE.
3. THE FIRST ANCHOR STAKE SHALL BE DRIVEN TOWARD THE PREVIOUSLY ANCHORED BALE TO HELP CREATE A TIGHT FIT.

B G9 STRAW BALE SEDIMENT TRAP
NOT TO SCALE

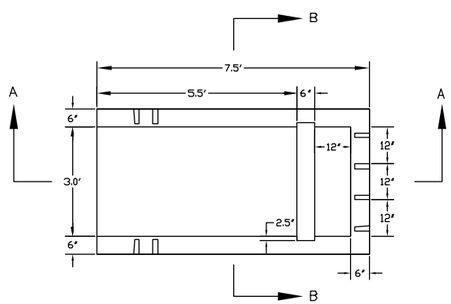

PLAN VIEW

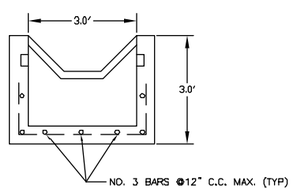

SECTION B–B

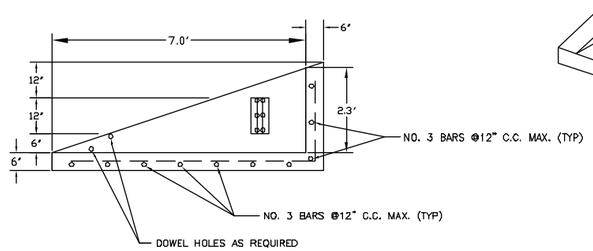

SECTION A–A

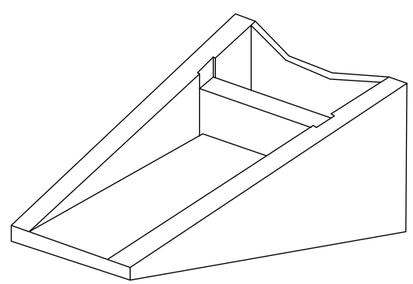

ISOMETRIC VIEW

C G9 PRECAST ENERGY DISSIPATOR
NOT TO SCALE

NOTES:
1. CONCRETE STRENGTH 4000 PSI MINIMUM.
2. REINFORCING STEEL SHALL CONFORM TO ASTM A-615, GRADE 40.
3. DIMENSIONS SHOWN FOR CONCRETE THICKNESS ARE MINIMUMS, ACTUAL MEASUREMENTS MAY VARY WITH MANUFACTURER'S TOLERANCES.
4. RIP RAP (CLASS B STONE) WILL BE PLACED AROUND THE ENERGY DISSIPATOR.

PERMIT PLANS

REFERENCE DRAWINGS

DRAWING NO.	TITLE

NORTH CAROLINA PROFESSIONAL SEAL 26500 ENGINEER CONAN D. FITZGERALD

Certification:
This project was conducted under my direct and responsible charge.

Conan D. Fitzgerald, PE — PE Registration No. 26500 — Date 7/6/2010
URS Corporation–NC

NO.	DATE	REVISIONS	DWN	CKD	APPD
1	12/2009	MODIFIED THE DATE	L.G.	R.L.	R.L.

DRAWN BY L.G. 4/2009 DATE	CHECKED BY R.L. 4/23/2009 DATE
DESIGNED BY L.G. 4/2009 DATE	APPROVED BY DATE

CONFIDENTIAL-ALL RIGHTS RESERVED-PROPERTY OF
URS
RDU, NORTH CAROLINA 27560

INTERNATIONAL PAPER
RIEGELWOOD, NORTH CAROLINA

COPYRIGHT © INTERNATIONAL PAPER DATED:

TECHNICAL – ENVIRONMENTAL
LINER SYSTEM DRAWINGS
RIEGELWOOD MILL LANDFILL CELL 2
EROSION & SEDIMENT CONTROL DETAILS
SHEET 18 OF 21

DR. BY: LG	SCALE: AS SHOWN	JOB #: 31826746	
ENG. BY: L.G.	DATE:	DATE:	DRAWING NO: G9 — REV: 1
PREV. DWG #: N/A			
EDMS DOCUMENT			
IP CAD#: 008-0000.DWG			

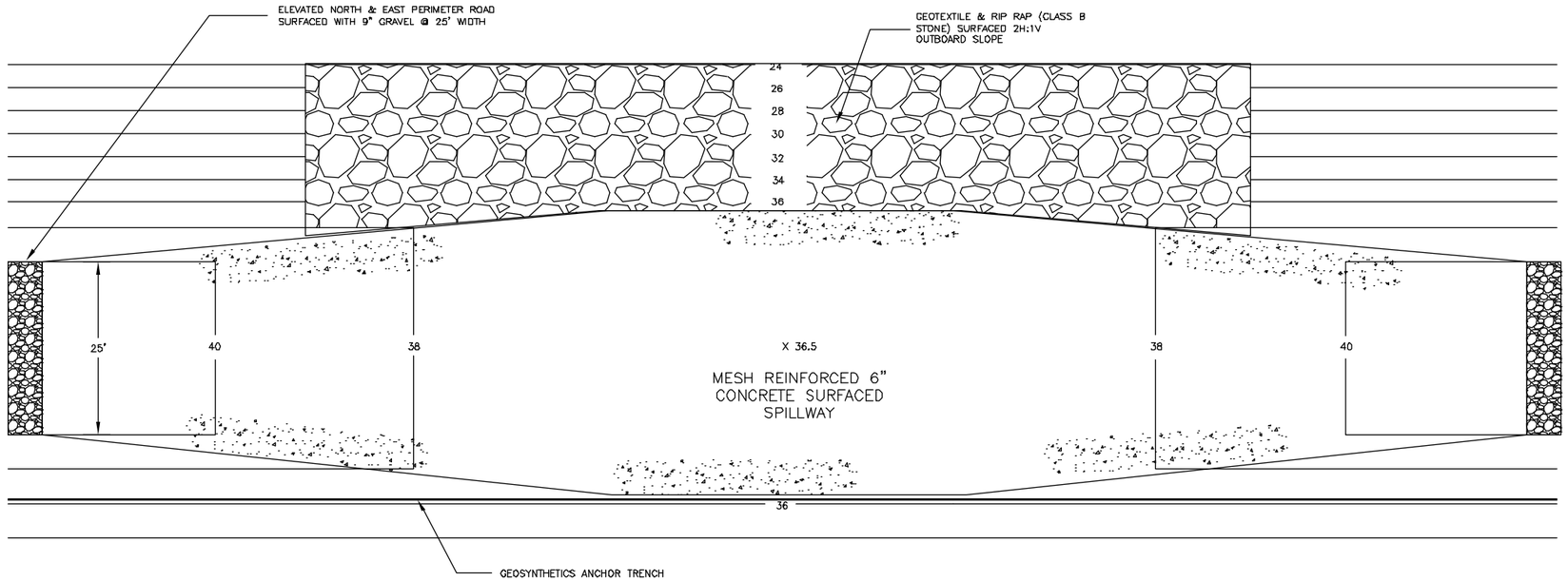

A / G8 CONCRETE SURFACED SPILLWAY – PLAN VIEW
NOT TO SCALE

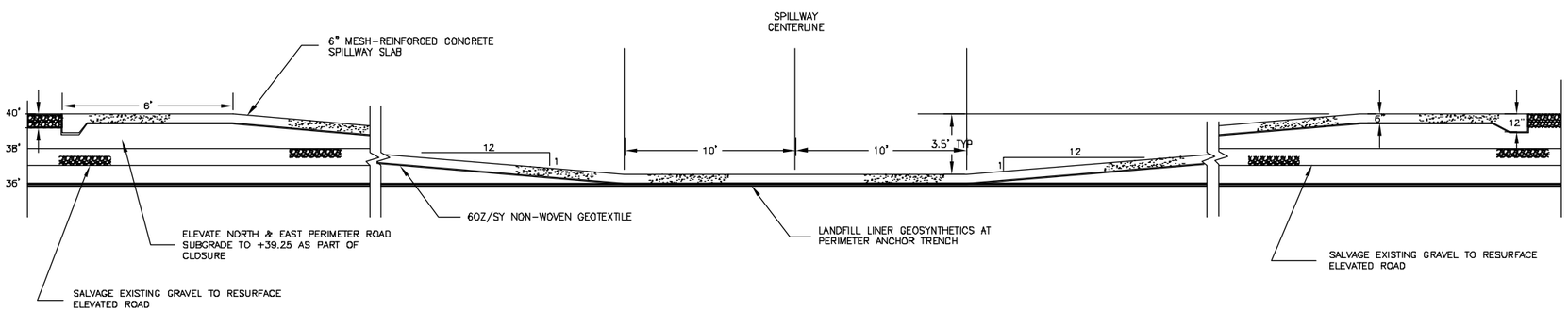

B / G8 CONCRETE SURFACED SPILLWAY – PROFILE VIEW
NOT TO SCALE

NOTES:

1. DIKE ELEVATIONS SHOWN FOR NORTH & EAST SIDES OF THE LANDFILL (SUBGRADE OF 37.0). THE WEST DIKE SUBGRADE IS 47.0 THEREFORE ADD 10' FOR THE WEST DIKE ELEVATIONS.

PERMIT PLANS

REFERENCE DRAWINGS

DRAWING NO.	TITLE

NORTH CAROLINA PROFESSIONAL SEAL 26500 ENGINEER CONAN D. FITZGERALD

Certification:
This project was conducted under my direct and responsible charge.

Conan D. Fitzgerald, PE — URS Corporation–NC
26500 — PE Registration No.
7/6/2010 — Date

NO.	DATE	REVISIONS	DWN	CKD	APPD
1	12/2009	MODIFIED THE DATE	L.G.	R.L.	R.L.

DRAWN BY R.L.	4/2009 DATE	CHECKED BY L.G.	4/23/2009 DATE
DESIGNED BY R.L.	4/2009 DATE	APPROVED BY	DATE

CONFIDENTIAL–ALL RIGHTS RESERVED–PROPERTY OF
URS
RALEIGH, NORTH CAROLINA 27560

INTERNATIONAL PAPER
RIEGELWOOD, NORTH CAROLINA

COPYRIGHT © INTERNATIONAL PAPER DATED:

TECHNICAL – ENVIRONMENTAL

LINER SYSTEM DRAWINGS
RIEGELWOOD MILL LANDFILL CELL 2
SPILLWAY DETAILS
SHEET 17 OF 21

DR. BY: R.L.	SCALE: AS SHOWN	JOB #: 31826746	
ENG. BY: R.L.	DATE:	DATE:	DRAWING NO. G8
PREV. DWG. #: N/A			REV. 1
EDMS DOCUMENT			
IP CAD #: 000–0000.DWG			

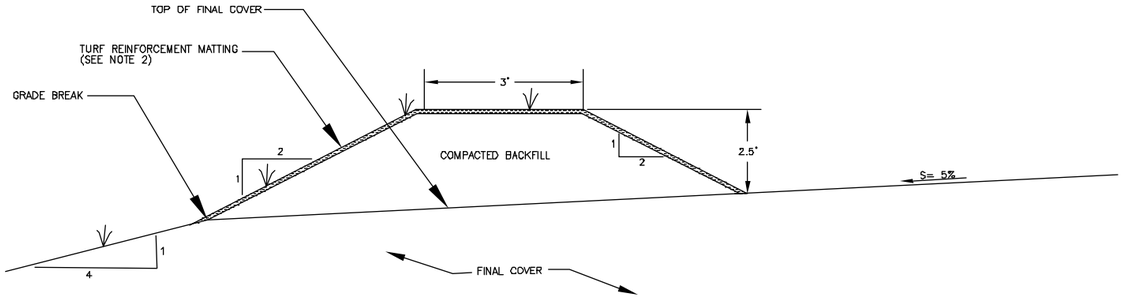

A G7 DIVERSION BERM
NOT TO SCALE

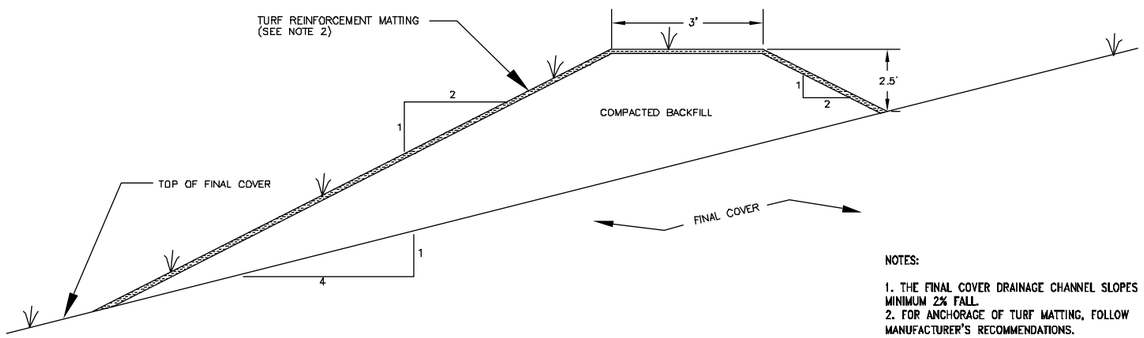

NOTES:

1. THE FINAL COVER DRAINAGE CHANNEL SLOPES AT MINIMUM 2% FALL.
2. FOR ANCHORAGE OF TURF MATTING, FOLLOW MANUFACTURER'S RECOMMENDATIONS.

C G7 FINAL COVER DRAINAGE SWALE
NOT TO SCALE

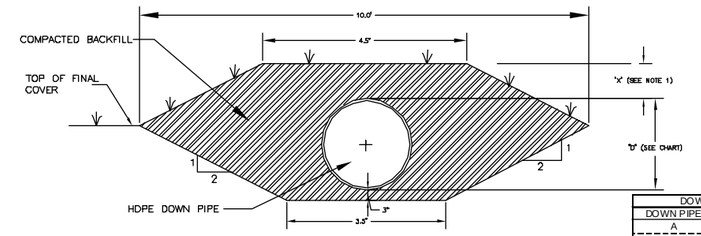

B G7 DOWN PIPE ON SLOPE
NOT TO SCALE

DOWN PIPE SCHEDULE		
DOWN PIPE	D (IN)	X (IN)
A	30	12
B	30	12
C	24	12

NOTES:

1. VARY TO PROVIDE 12" MINIMUM OF PIPE COVER.

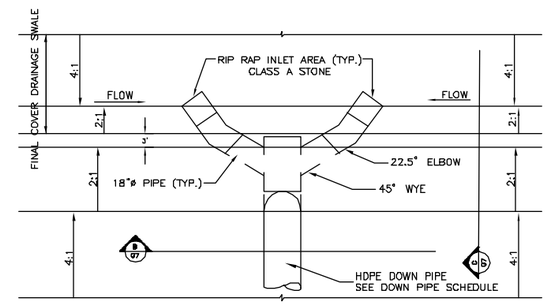

D G7 DOWN PIPE
NOT TO SCALE

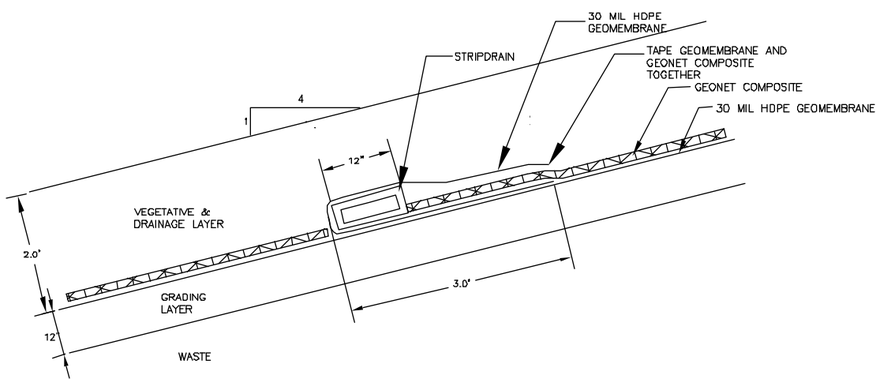

E G7 STRIPDRAIN W/O DRAIN PIPE
NOT TO SCALE

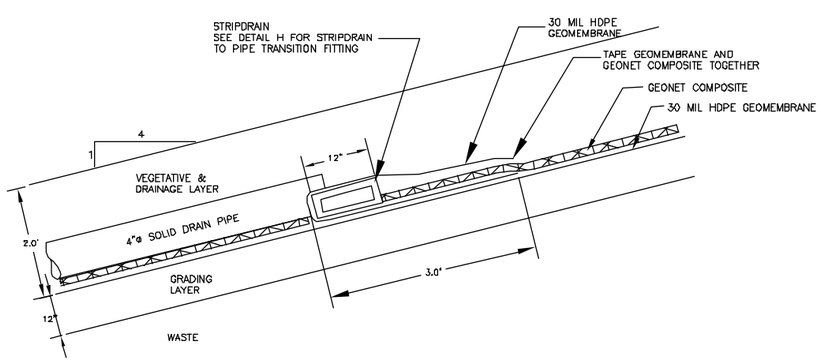

G G7 STRIPDRAIN W/ DRAIN PIPE
NOT TO SCALE

NOTES:

1. STRIPDRAINS ARE PLACED EVERY 100 FEET ON CENTER ALONG SIDE SLOPES. SLOPE STRIPDRAINS TOWARD DRAIN PIPES AT 5% MIN. SLOPE.
2. SOLID DRAIN PIPES TO BE SPACED HORIZONTALLY EVERY 200 FEET ON CENTER. OUTLET SOLID DRAIN PIPES INTO TOE DRAIN AT BASE OF SLOPE.

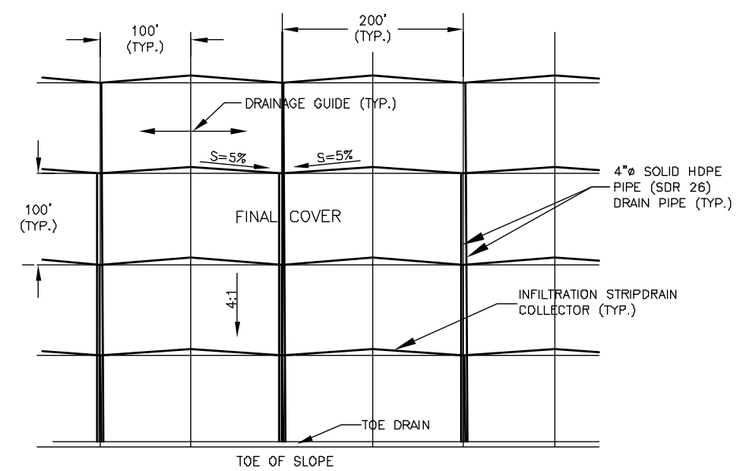

F G6 INFILTRATION STRIPDRAIN COLLECTOR LAYOUT
NOT TO SCALE

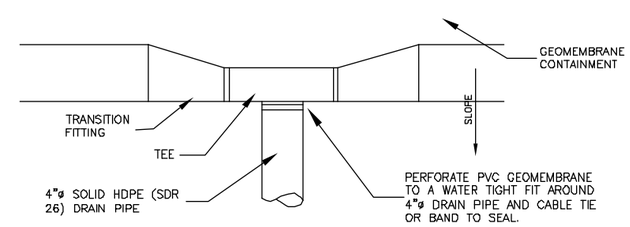

H G7 STRIPDRAIN TO TRANSITION FITTING
NOT TO SCALE

REFERENCE DRAWINGS	
DRAWING NO.	TITLE

PERMIT PLANS

NORTH CAROLINA PROFESSIONAL SEAL 26500 ENGINEER CONAN D. FITZGERALD

Certification:
This project was conducted under my direct and responsible charge.

Conan D. Fitzgerald, PE — URS Corporation–NC
26500 — PE Registration No.
7/6/2010 — Date

NO.	DATE	REVISIONS	DWN	CKD	APPD
1	12/2009	MODIFIED THE DATE	L.G.	R.L.	R.L.

DRAWN BY L.G.	4/2009	CHECKED BY R.L.	4/23/2009
DESIGNED BY L.G.	4/2009	APPROVED BY	

CONFIDENTIAL–ALL RIGHTS RESERVED–PROPERTY OF
URS
RALEIGH, NORTH CAROLINA 27560

INTERNATIONAL PAPER
RIEGELWOOD, NORTH CAROLINA

COPYRIGHT © INTERNATIONAL PAPER DATED:

TECHNICAL – ENVIRONMENTAL
LINER SYSTEM DRAWINGS
RIEGELWOOD MILL LANDFILL CELL 2
DRAINAGE CHANNEL DETAILS
SHEET 16 OF 21

DR. BY: LG	SCALE: AS SHOWN	JOB #: 31826746
ENG. BY: L.G.	DATE: DATE:	DRAWING NO. G7 — REV. 1
PREV. DWG. #: N/A		
EDMS DOCUMENT		
IP CAD #: 000–0000.DWG		

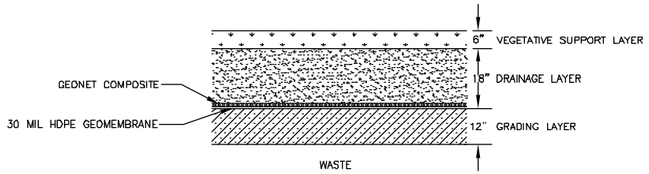

A/G6 FINAL COVER LINER SYSTEM
SCALE: 1"=2'

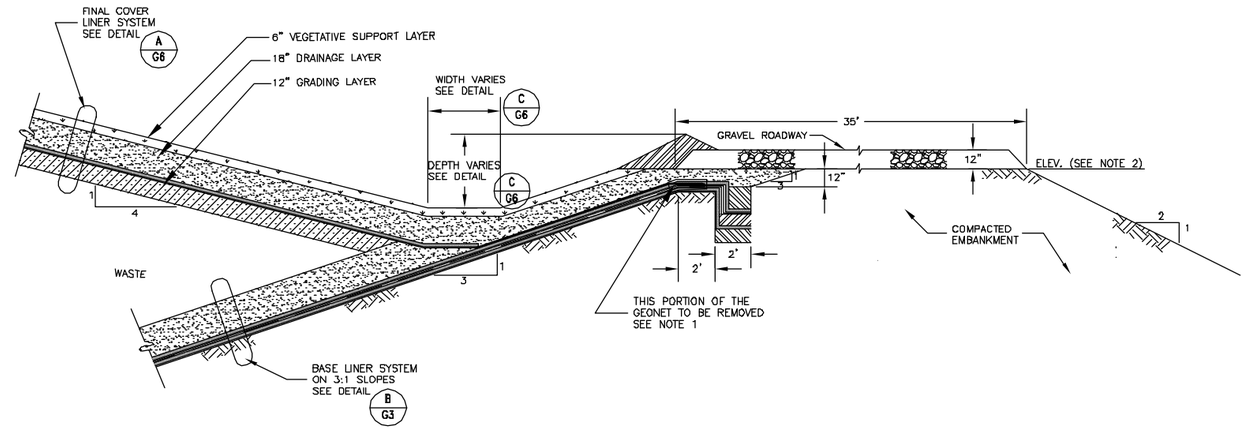

B/G6 CELL 2 BERM DETAIL
SCALE: 1"=4'

NOTES:

1. TOP GEONET FROM THE BASE LINER SYSTEM WILL BE REMOVED TO ENABLE THE FINAL COVER GEOMEMBRANE TO BE CONTINOUSLY WELDED TO THE BASE LINER SYSTEM PRIMARY GEOMEMBRANE.
2. TOP OF CELL 1 WEST BERM SUBGRADE IS ELEVATION 47.0 AND SOUTH BERM SUBGRADE IS 84.0. TOP OF CELL 1 NORTH AND EAST BERM SUBGRADE IS ELEVATION 37.0. TOP OF CELL 2 BERM SUBGRADE IS AT ELEVATION 37.0.

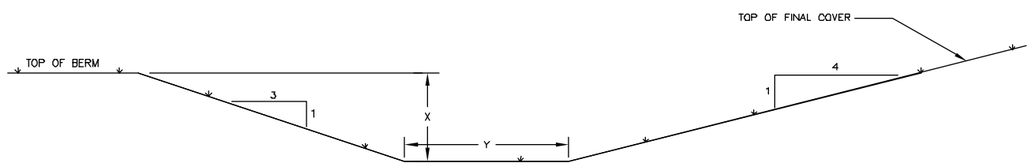

DRAINAGE CHANNEL SCHEDULE		
CHANNEL TYPE	X	Y
A	2	2
B	3	3

C/G6 PERIMETER DRAINAGE CHANNEL
NOT TO SCALE

PERMIT PLANS

REFERENCE DRAWINGS	
DRAWING NO.	TITLE

Certification:
This project was conducted under my direct and responsible charge.

Conan D. Fitzgerald, PE
URS Corporation–NC

26500 — PE Registration No.
7/6/2010 — Date

NORTH CAROLINA PROFESSIONAL SEAL 26500 ENGINEER CONAN D. FITZGERALD

NO.	DATE	REVISIONS	DWN	CKD	APPD
1	12/2009	MODIFIED THE BASE LINER SYSTEM DETAIL	L.G.	R.L.	R.L.

DRAWN BY L.G.	4/2009 DATE DATE	CHECKED BY R.L.	4/23/2009 DATE DATE
DESIGNED BY L.G.	4/2009 DATE DATE	APPROVED BY	DATE DATE

CONFIDENTIAL–ALL RIGHTS RESERVED–PROPERTY OF
URS
RALEIGH, NORTH CAROLINA 27560

INTERNATIONAL PAPER
RIEGELWOOD, NORTH CAROLINA

COPYRIGHT © INTERNATIONAL PAPER DATED:

TECHNICAL – ENVIRONMENTAL
LINER SYSTEM DRAWINGS
RIEGELWOOD MILL LANDFILL CELL 2
FINAL COVER DETAILS
SHEET 15 OF 21

DR. BY: LG	SCALE: AS SHOWN	JOB #: 31826746	
ENG. BY: L.G.	DATE: DATE:	DRAWING NO.	REV.
PREV. DWG. #: N/A		G6	1
EDMS DOCUMENT			
IP CAD #: 000–0000.DWG			

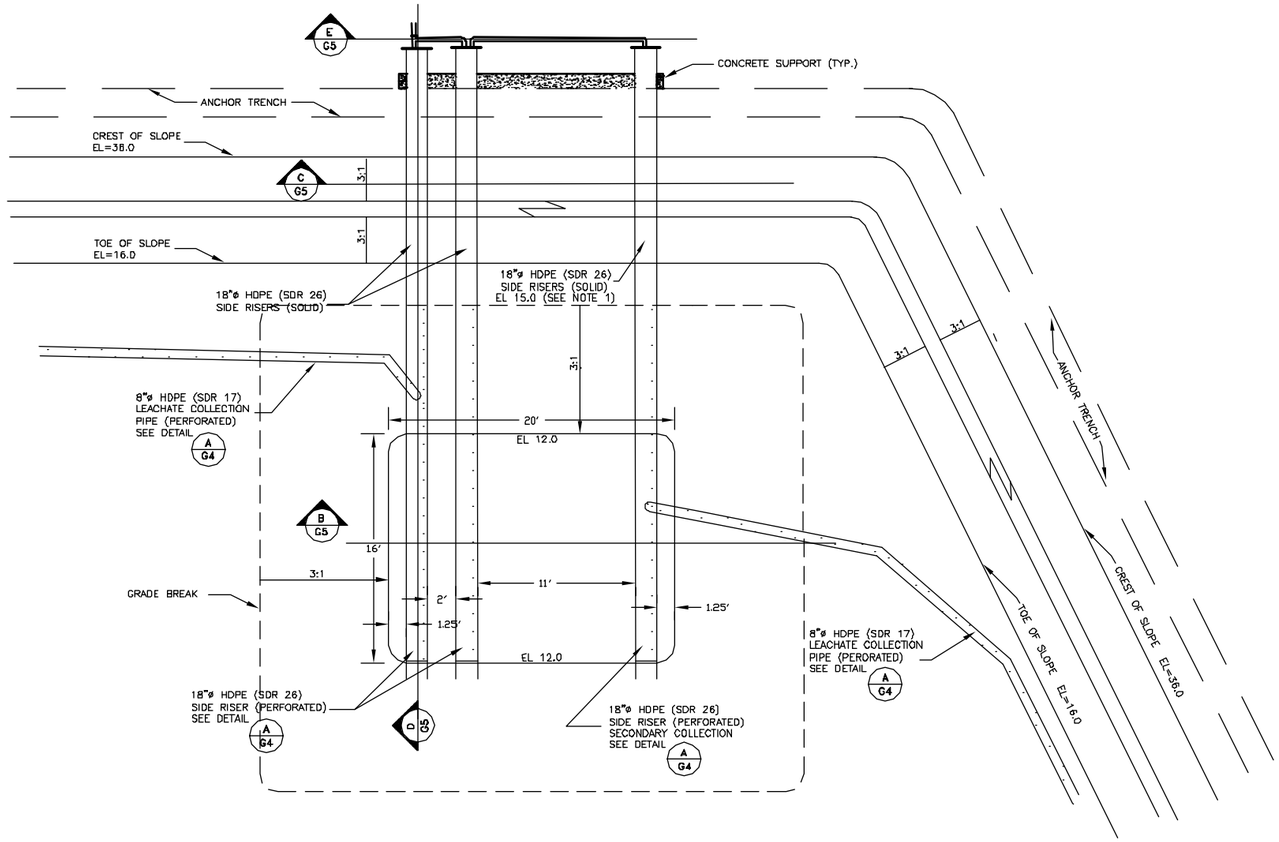

A G5 LEACHATE SUMP – PLAN VIEW – DETAIL
SCALE: 1" = 8'

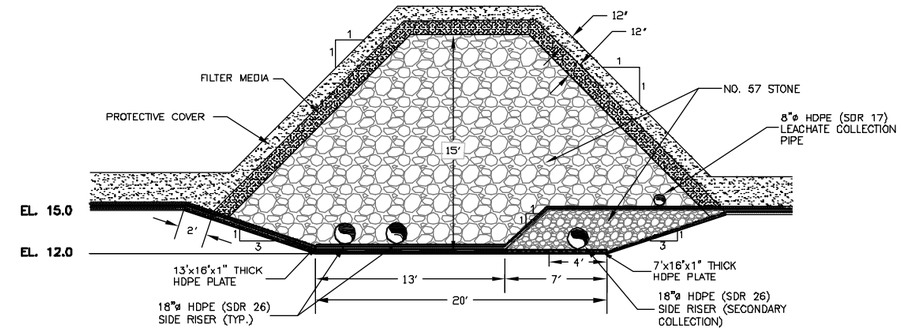

B G5 LEACHATE SUMP – TYPICAL CROSS SECTION DETAIL
SCALE: 1" = 8'

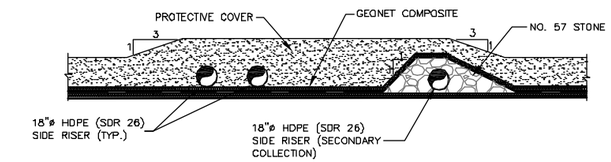

C G5 LEACHATE SUMP – TYPICAL CROSS SECTION OF SIDE RISER PIPES ON SLOPE DETAIL ABOVE ELEVATION 28.5
SCALE: 1" = 8'

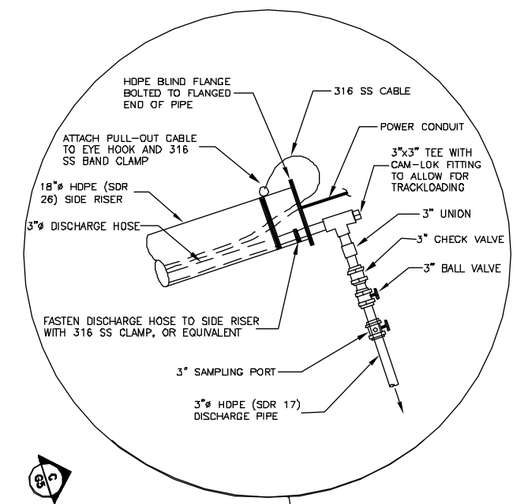

NOTES:

1. ELEVATIONS SHOWN REPRESENT BASE LINER SYSTEM SUBGRADE,

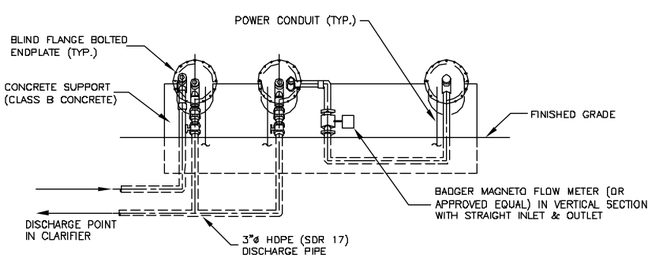

E G5 SIDE RISER FRONT VIEW
NOT TO SCALE

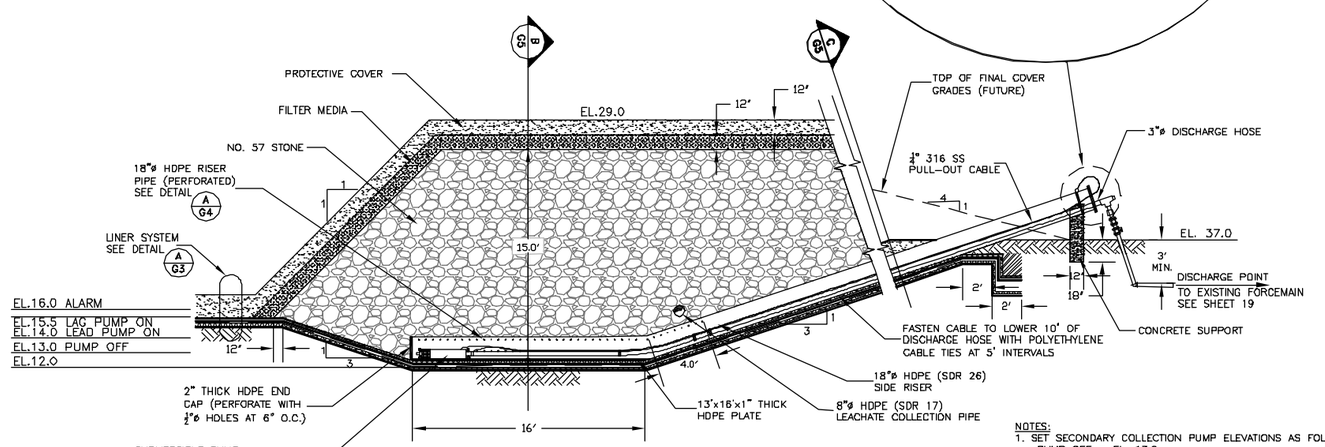

D G5 LEACHATE SUMP – SECTION THROUGH LEACHATE COLLECTION SIDE RISER DETAIL
NOT TO SCALE

NOTES:

1. SET SECONDARY COLLECTION PUMP ELEVATIONS AS FOLLOWS:
   PUMP OFF = EL. 13.0
   PUMP ON = EL. 14.5
   ALARM = EL. 15.5

REFERENCE DRAWINGS

DRAWING NO.	TITLE

PERMIT PLANS

NORTH CAROLINA PROFESSIONAL SEAL 26500 ENGINEER CONAN D. FITZGERALD

Certification:
This project was conducted under my direct and responsible charge.

Conan D. Fitzgerald, PE — URS Corporation–NC
26500 — PE Registration No.
7/6/2010 — Date

NO.	DATE	REVISIONS	DWN	CKD	APPD
2	5/2010	MODIFIED THE LEACHATE SUMP ELEVATIONS	L.G.	R.L.	R.L.
1	12/2009	MODIFIED THE BASE LINER SYSTEM DETAILS	L.G.	R.L.	R.L.

DRAWN BY L.G.	DATE 4/2009	CHECKED BY R.L.	DATE 4/23/2009
DESIGNED BY L.G.	DATE 4/2009	APPROVED BY	DATE

CONFIDENTIAL-ALL RIGHTS RESERVED-PROPERTY OF
URS
RALEIGH, NORTH CAROLINA 27560

INTERNATIONAL PAPER
RIEGELWOOD, NORTH CAROLINA

COPYRIGHT © INTERNATIONAL PAPER DATED

TECHNICAL - ENVIRONMENTAL
LINER SYSTEM DRAWINGS
RIEGELWOOD MILL LANDFILL CELL 2
FINAL COVER DETAILS
SHEET 14 OF 21

DR. BY: L.G.	SCALE: AS SHOWN	JOB #: 31826746	
ENG. BY: L.G.	DATE: DATE:	DRAWING NO. G5	REV. 2
PREV. DWG. #: N/A			
EDMS DOCUMENT			
IP CAD#: 080-0800.DWG			

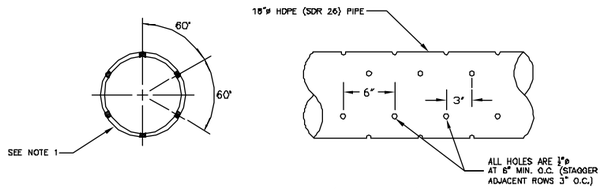

SIDE RISERS (IN SUMP)

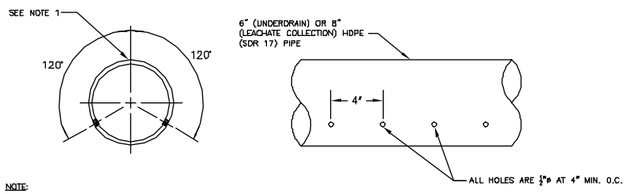

NOTE:

1. ORIENT PIPE AS SHOWN.

UNDERDRAIN AND LEACHATE COLLECTION PIPING

A G4 HDPE PIPE PERFORATIONS DETAIL
NOT TO SCALE

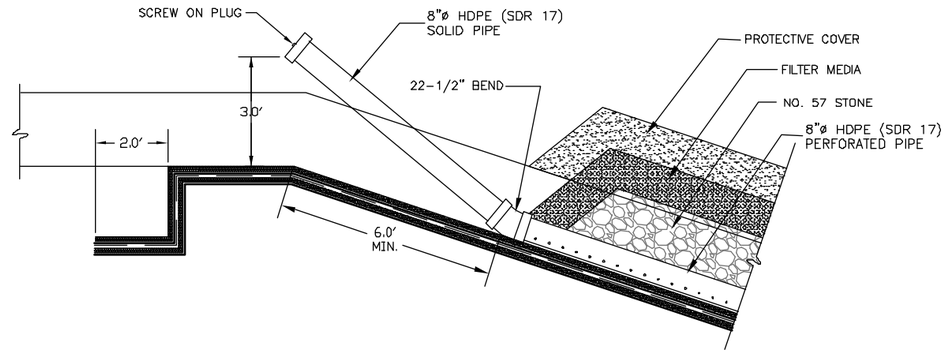

B G4 LEACHATE COLLECTION PIPE CLEANOUT AT CREST OF SLOPE DETAIL
NOT TO SCALE

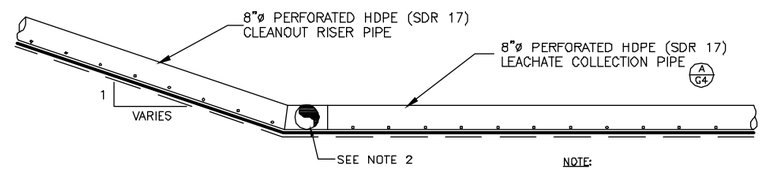

NOTE:

1. SOME LAYERS AND GRAVEL COLUMN (WHERE APPLICABLE) NOT SHOWN FOR CLARITY.
2. CONNECT TO CROSSING LEACHATE PIPING USING A CROSS FITTING.
3. FOR GRAVEL COLUMN, SEE DETAIL D G4

C G4 LEACHATE COLLECTION PIPE CLEANOUT AT BASE OF SLOPE DETAIL
NOT TO SCALE

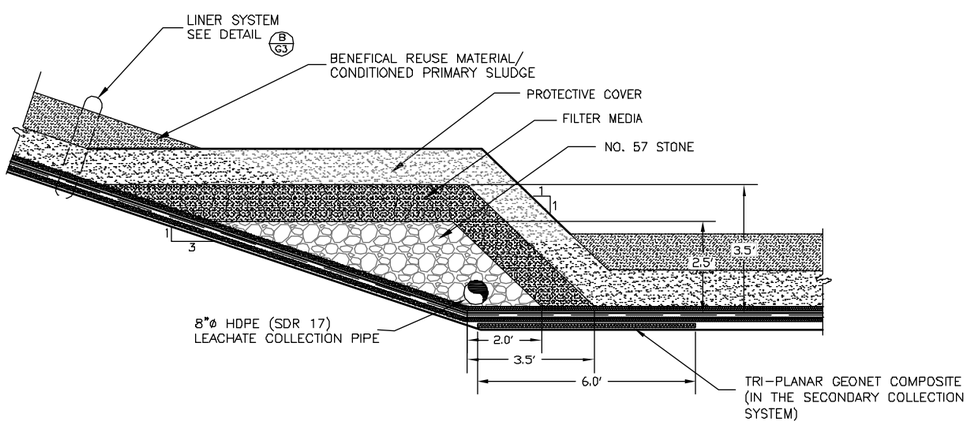

TYPE 1 – ALONG TOE

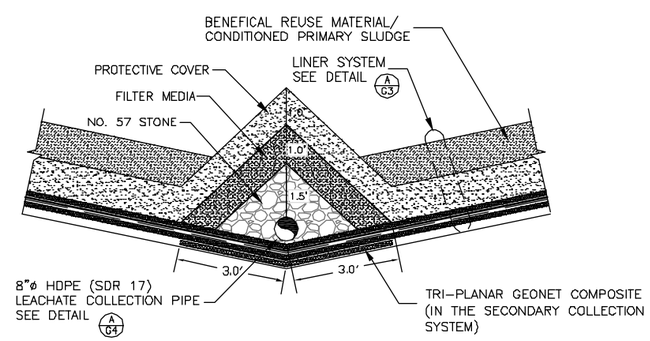

TYPE 2 – IN VALLEY

D G4 GRAVEL COLUMN CROSS SECTION DETAIL
SCALE: 1"=2'

PERMIT PLANS

REFERENCE DRAWINGS

DRAWING NO.	TITLE

Certification:
This project was conducted under my direct and responsible charge.

NORTH CAROLINA PROFESSIONAL SEAL 26500 ENGINEER CONAN D. FITZGERALD

Conan D. Fitzgerald, PE — PE Registration No. 26500 — Date 7/6/2010
URS Corporation–NC

NO.	DATE	REVISIONS	DWN	CKD	APPD
1	12/2009	MODIFIED THE BASE LINER SYSTEM DETAILS	L.G.	R.L.	R.L.

DRAWN BY L.G. 4/2009	DATE DATE	CHECKED BY R.L. 4/23/2009	DATE DATE
DESIGNED BY L.G. 4/2009	DATE DATE	APPROVED BY	DATE DATE

CONFIDENTIAL-ALL RIGHTS RESERVED-PROPERTY OF
URS
RALEIGH, NORTH CAROLINA 27560

INTERNATIONAL PAPER
RIEGELWOOD, NORTH CAROLINA

COPYRIGHT © INTERNATIONAL PAPER DATED

TECHNICAL - ENVIRONMENTAL
LINER SYSTEM DRAWINGS
RIEGELWOOD MILL LANDFILL CELL 2
LEACHATE MANAGEMENT DETAILS
SHEET 13 OF 21

DR. BY: LG	SCALE: AS SHOWN	JOB #: 31826746	
ENG. BY: L.G.	DATE: DATE:	DRAWING NO.	REV.
PREV. DWG. #: N/A		G4	1
EDMS DOCUMENT			
IP CAD#: 080-0800.DWG			

P:\Jobs4\ Projects\International Paper\IP - Riegelwood\Cell 2 Landfill\Liner Construction Drawings\10.0 Deliverables\Resubmittal toSheet 13 Secondary.dwg July 06, 2010 - 6:18 PM

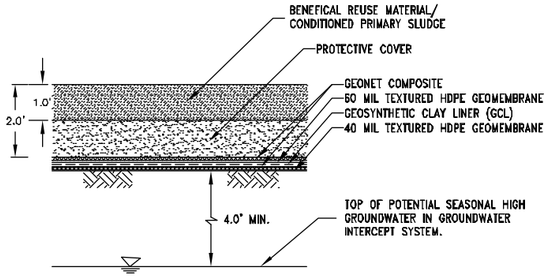

A / G3 **BASE LINER SYSTEM DETAIL**
SCALE: 1"=2'

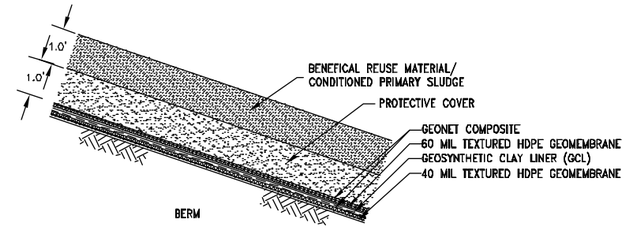

B / G3 **TYPICAL LINER SYSTEM ON 3:1 SLOPES**
SCALE: 1"=2'

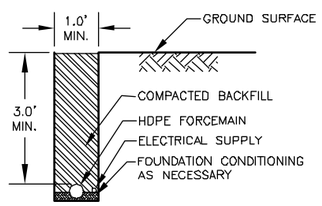

C / G3 **UTILITY TRENCH**
NOT TO SCALE

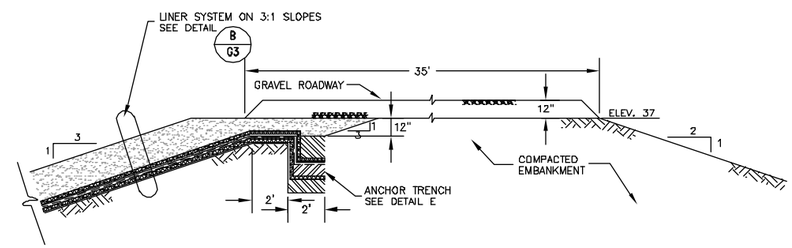

D / G3 **CELL 2 BERM DETAIL**
SCALE: 1"=4'

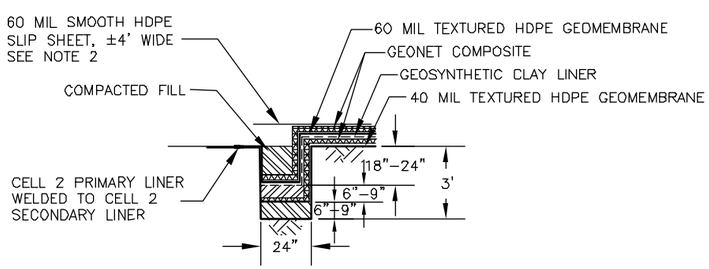

E / G3 **ANCHOR TRENCH**
NOT TO SCALE

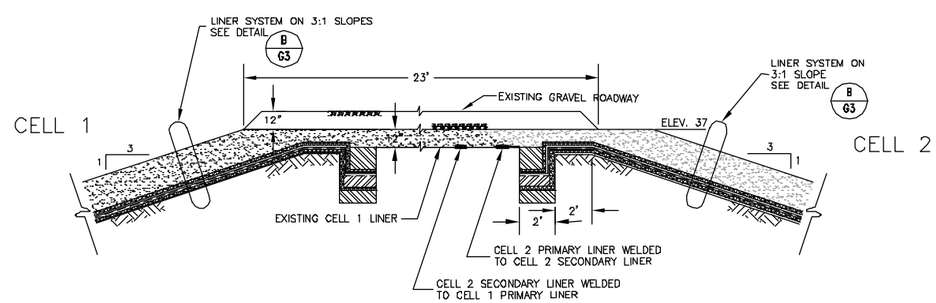

F / G3 **INTERIOR BERM DETAIL**
SCALE: 1"=4'

NOTES:

1. THE THICKNESS OF THE GEOSYNTHETICS IS EXAGGERATED FOR CLARITY.
2. PLACE HDPE SLIP SHEET ON THE NORTH, EAST AND WEST BERM ONLY.

PERMIT PLANS

REFERENCE DRAWINGS

DRAWING NO.	TITLE

Certification:
This project was conducted under my direct and responsible charge.

NORTH CAROLINA PROFESSIONAL SEAL 26500 ENGINEER CONAN D. FITZGERALD

Conan D. Fitzgerald, PE
URS Corporation–NC

26500 — PE Registration No.
7/6/2010 — Date

NO.	DATE	REVISIONS	DWN	CKD	APPD
2	5/2010	MODIFIED THE BASE LINER SYSTEM DETAILS	L.G.	R.L.	R.L.
1	12/2009	MODIFIED THE BASE LINER SYSTEM DETAILS	L.G.	R.L.	R.L.

DRAWN BY L.G.	4/2009 DATE DATE	CHECKED BY R.L.	4/23/2009 DATE DATE
DESIGNED BY L.G.	4/2009 DATE DATE	APPROVED BY	DATE DATE

CONFIDENTIAL—ALL RIGHTS RESERVED—PROPERTY OF
URS
RALEIGH, NORTH CAROLINA 27560

INTERNATIONAL PAPER
RIEGELWOOD, NORTH CAROLINA

COPYRIGHT © INTERNATIONAL PAPER DATED:

TECHNICAL – ENVIRONMENTAL
LINER SYSTEM DRAWINGS
RIEGELWOOD MILL LANDFILL CELL 2
LINER AND PERIMETER BERM DETAILS
SHEET 12 OF 21

DR. BY: LG	SCALE: AS SHOWN	JOB #: 31826746	
ENG. BY: URS	DATE: DATE:	DRAWING NO.	REV.
PREV. DWG. #: N/A		G3	2
EDMS DOCUMENT			
IP CAD#: 000–0000.DWG			

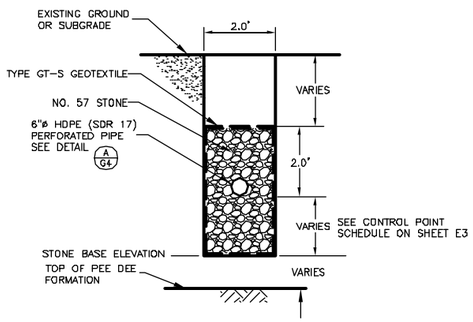

A/G2 UNDERDRAIN GROUNDWATER COLLECTION TRENCH
SCALE: 1" = 2'

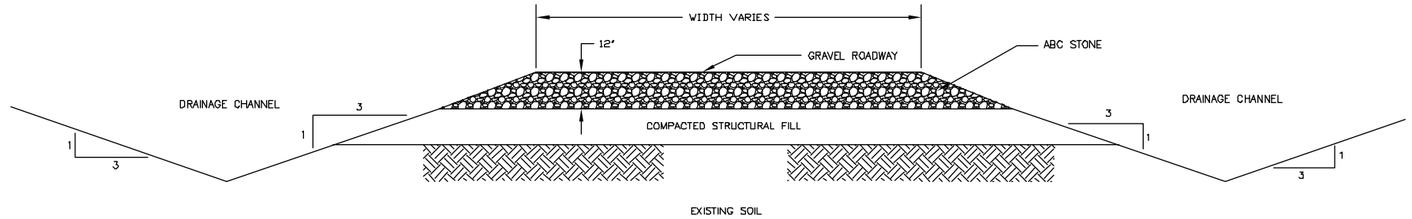

B/G2 ACCESS ROAD
NOT TO SCALE

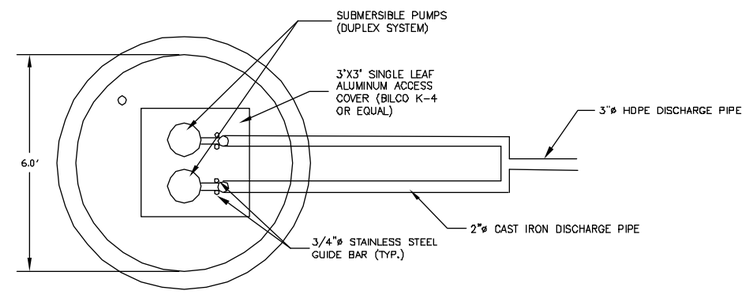

PLAN VIEW

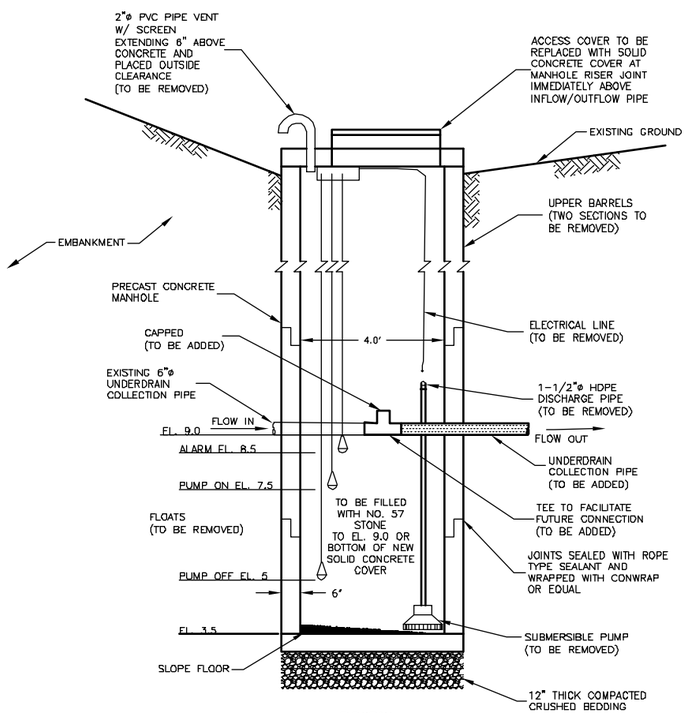

C/G2 CELL 1 UNDERDRAIN MANHOLE TO BE DECOMMISSIONED
SCALE: 1" = 2'

NOTES:

1. MANHOLE TO BE DECOMMISSIONED AND PUMP, DISCHARGE PIPE, FLOATS AND ELECTRICAL LINE TO BE REMOVED AFTER UNDERDRAIN COLLECTION PIPE IS EXTENDED BENEATH CELL 2 AND CONNECTED TO NEW CELL 2 UNDERDRAIN MANHOLE.

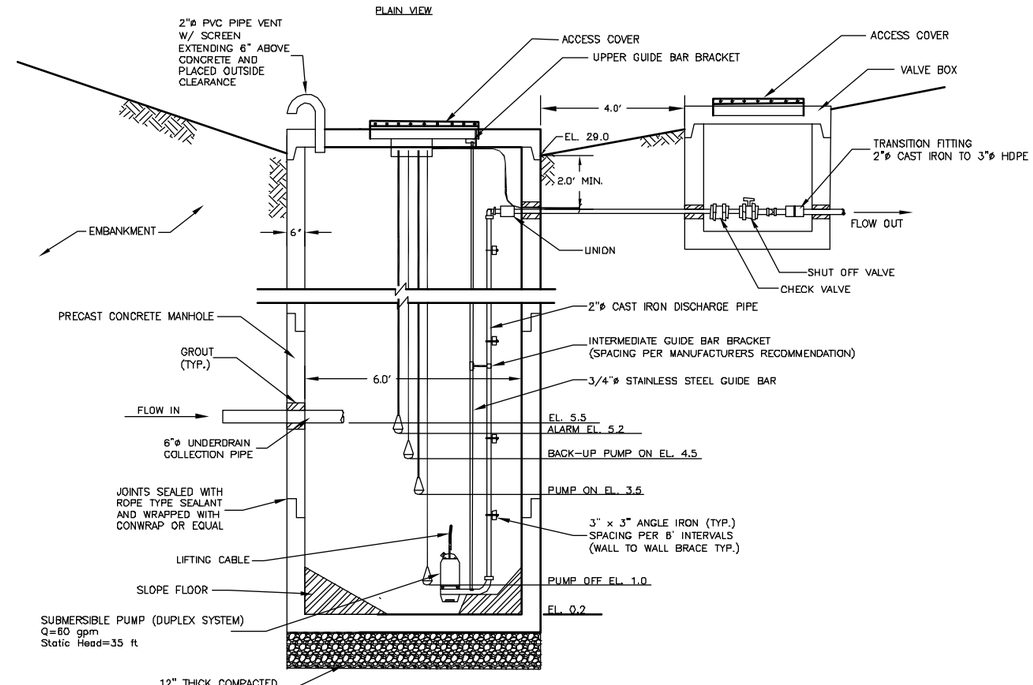

D/G2 PROPOSED CELL 2 UNDERDRAIN MANHOLE
NOT TO SCALE

PERMIT PLANS

REFERENCE DRAWINGS

DRAWING NO.	TITLE

NORTH CAROLINA PROFESSIONAL SEAL 26500 ENGINEER CONAN D. FITZGERALD

Certification:
This project was conducted under my direct and responsible charge.

Conan D. Fitzgerald, PE
URS Corporation-NC

26500
PE Registration No.

7/6/2010
Date

NO.	DATE	REVISIONS	DWN	CKD	APPD
1	12/2009	MODIFIED THE MANHOLE STRUCTURE	L.G.	R.L.	R.L.

DRAWN BY L.G.	DATE 4/2009 DATE	CHECKED BY R.L.	DATE 4/23/2009 DATE
DESIGNED BY L.G.	DATE 4/2009 DATE	APPROVED BY	DATE DATE

CONFIDENTIAL-ALL RIGHTS RESERVED-PROPERTY OF
URS
RDU, NORTH CAROLINA 27560

INTERNATIONAL PAPER
RIEGELWOOD, NORTH CAROLINA

COPYRIGHT © INTERNATIONAL PAPER DATED:

TECHNICAL - ENVIRONMENTAL
LINER SYSTEM DRAWINGS
RIEGELWOOD MILL LANDFILL CELL 2
UNDERDRAIN DETAILS
SHEET 11 OF 21

DR. BY: LG	SCALED AS SHOWN	JOB #: 31826746	
ENG. BY: L.G.	DATE: DATE:	DRAWING NO. G2	REV. 1
PREV. DWG. #: N/A			
EDMS DOCUMENT			
IP CAD#: 006-0060.DWG			

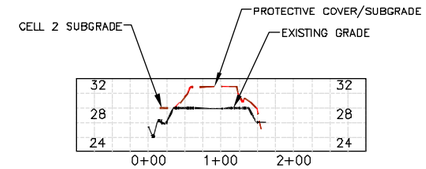

C – Access Road PROFILE

B – Cell 1–2 S–N PROFILE

A – Cell 2 W–E PROFILE

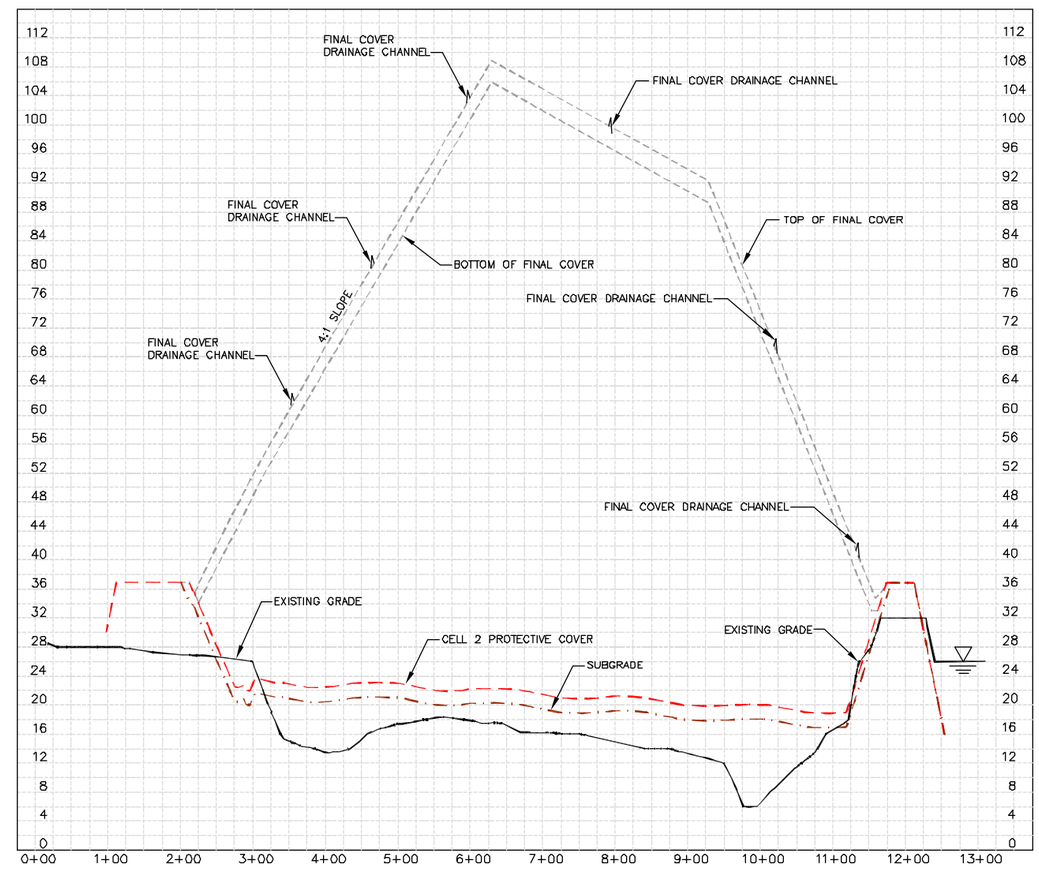

PERMIT PLANS

REFERENCE DRAWINGS	
DRAWING NO.	TITLE

NOTES:

Certification:
This project was conducted under my direct and responsible charge.

Conan D. Fitzgerald, PE — URS Corporation–NC
26500 — PE Registration No.
7/6/2010 — Date

NORTH CAROLINA PROFESSIONAL SEAL 26500 ENGINEER CONAN D. FITZGERALD

NO.	DATE	REVISIONS	DWN	CKD	APPD
1	12/2009	MODIFIED THE DATE	L.G.	R.L.	R.L.

DRAWN BY L.G.	4/2009 DATE	CHECKED BY R.L.	4/23/2009 DATE
DESIGNED BY L.G.	4/2009 DATE	APPROVED BY	DATE

CONFIDENTIAL–ALL RIGHTS RESERVED–PROPERTY OF
URS
RSU, NORTH CAROLINA 27560

INTERNATIONAL PAPER
RIEGELWOOD, NORTH CAROLINA

COPYRIGHT © INTERNATIONAL PAPER DATED:

TECHNICAL – ENVIRONMENTAL

LINER SYSTEM DRAWINGS
RIEGELWOOD MILL LANDFILL CELL 2
CROSS SECTIONS
SHEET 10 OF 21

DR. BY: TSH	SCALE: AS SHOWN	JOB # 31826746	
ENG. BY: L.G.	DATE: DATE:	DRAWING NO.	REV.
PREV. DWG. #: N/A		G1	1
EDMS DOCUMENT			
IP CAD#: 000–D000.DWG			

P:\jobs4_Projects\International Paper\IP – Riegelwood\Cell 2 Landfill\Liner Construction Drawings\10.0 Deliverables\Resubmittal toSheet 10.dwg July 06, 2010 – 6:14 PM

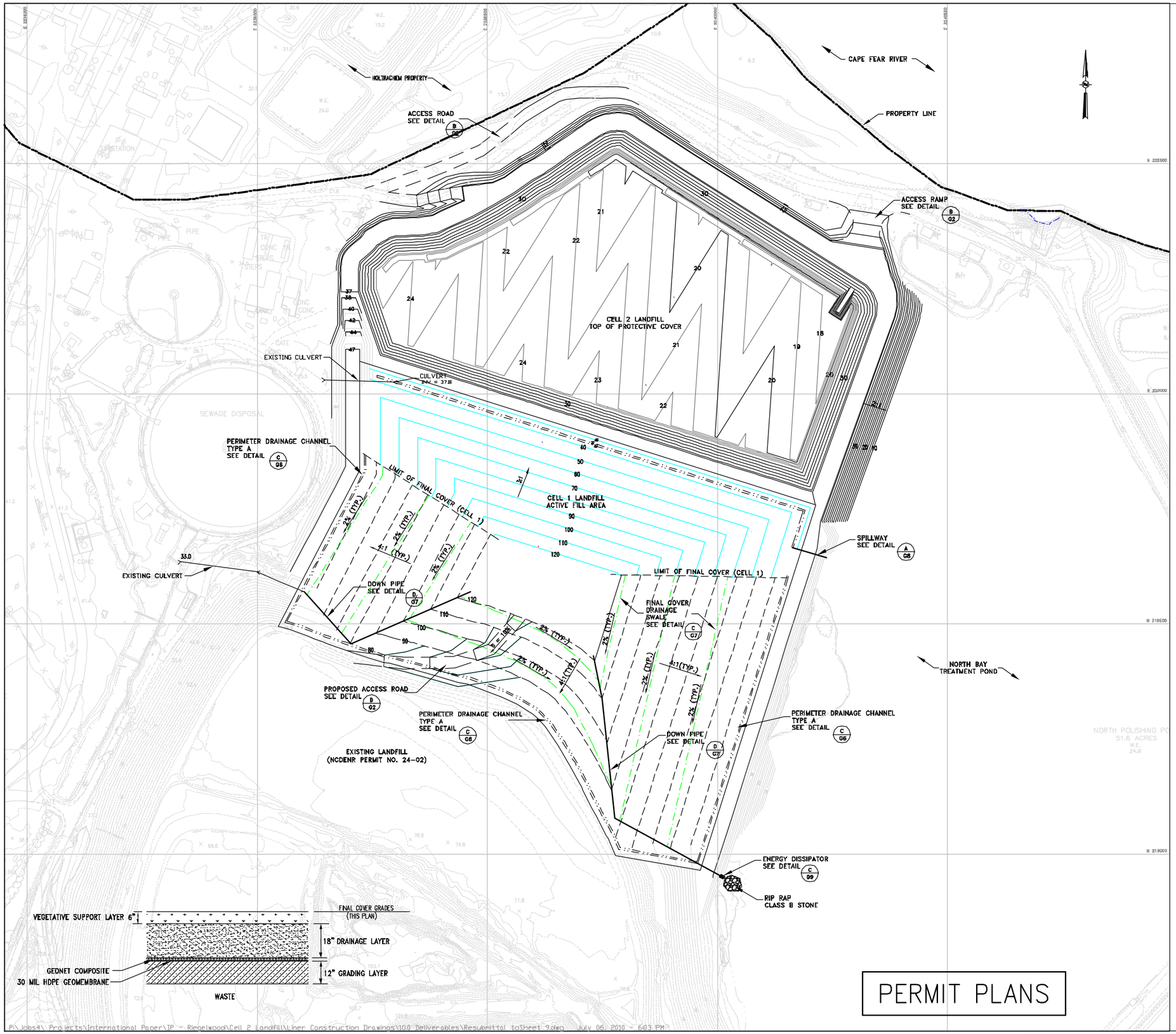

LEGEND

- SPOT ELEVATION
- EXISTING 10' CONTOUR
- EXISTING 2' CONTOUR
- TOP OF PROTECTIVE COVER CONTOUR
- TOP OF FINAL COVER CONTOUR
- TOP OF WASTE CONTOUR
- PERIMETER DRAINAGE CHANNEL
- INTERMEDIATE DRAINAGE SWALE
- DOWN PIPE
- PROPERTY LINE
- ACCESS ROAD
- FENCE LINE
- TREE LINE
- UTILITY POLE
- AERIAL SURVEY MONUMENT

REFERENCES

1. THIS MAP COMPILED BY PHOTOGRAMMETRIC METHODS FROM AERIAL PHOTOGRAPHY DATED 3/14/01 BY AIR SURVEY CORPORATION, 45180 BUSINESS COURT, DULLES, VIRGINIA 20166-6706 AS APPROVED BY INTERNATIONAL PAPER COMPANY.
2. COORDINATE SYSTEM IS NORTH CAROLINA STATE PLANE GRID, 1983, US FEET.
3. ELEVATIONS ARE IN FEET AND REFERENCED TO MEAN SEA LEVEL (MSL) NATIONAL GEODETIC VERTICAL DATUM (NGVD).
4. PLANT ELEVATION DATUM 0.00 FEET IS REPORTED BY McKIM & CREED (REFERENCE DAVID B. GOLDSTONE, JR., REGISTERED SURVEYOR, WHITEVILLE, NC) TO BE EL. -3.76 NGVD; THUS, EL. 43.76 PLANT DATUM = EL. 40.00 NGVD.
5. TOPOGRAPHY OF AS-BUILT SUBGRADE ELEVATIONS OF CELL 1 BASED ON DRAWING ENTITLED INTERNATIONAL PAPER COMPANY, RIEGELWOOD PAPER MILL, SHEET 1 OF 5, BY BRUNSWICK SURVEYING, INC., DATED 2003.
6. TOPOGRAPHY SURVEY OF CELL 2 AND ACTIVE FILLING AREA OF CELL 1 ARE BASED MARCH 2, 2009 TOPOGRAPHIC SURVEY BY URS CORPORATION.

REFERENCE DRAWINGS

DRAWING NO.	TITLE

NOTES:

NORTH CAROLINA PROFESSIONAL SEAL 26500 ENGINEER CONAN D. FITZGERALD

Certification:
This project was conducted under my direct and responsible charge.

Conan D. Fitzgerald, PE — URS Corporation-NC
PE Registration No. 26500 — Date 7/6/2010

NO.	DATE	REVISIONS	DWN	CKD	APPD
1	12/2009	MODIFIED THE DATE	L.G.	R.L.	R.L.

DRAWN BY L.G.	4/2009 DATE	CHECKED BY R.L.	4/23/2009 DATE
DESIGNED BY L.G.	4/2009 DATE	APPROVED BY	DATE

CONFIDENTIAL-ALL RIGHTS RESERVED-PROPERTY OF
URS
8181 NORTH CAROLINA 27560

INTERNATIONAL PAPER
RIEGELWOOD, NORTH CAROLINA

COPYRIGHT © INTERNATIONAL PAPER DATED

TECHNICAL - ENVIRONMENTAL
LINER SYSTEN DRAWINGS
RIEGELWOOD MILL LANDFILL CELL 2
OPERATIONAL PLAN
SHEET 9 OF 21

DR. BY: LG	SCALE: AS SHOWN	JOB #: 31826746	
ENG. BY: L.G.	DATE: DATE:	DRAWING NO.	REV.
PREV. DWG. #: N/A		E8	1
EDMS DOCUMENT			
IP CAD#: 080-0800.DWG			

P:\Jobs4\ Projects\International Paper\IP - Riegelwood\Cell 2 Landfill\Liner Construction Drawings\100 Deliverables\Resubmittal toSheet 9.dwg July 06, 2010 - 6:03 PM

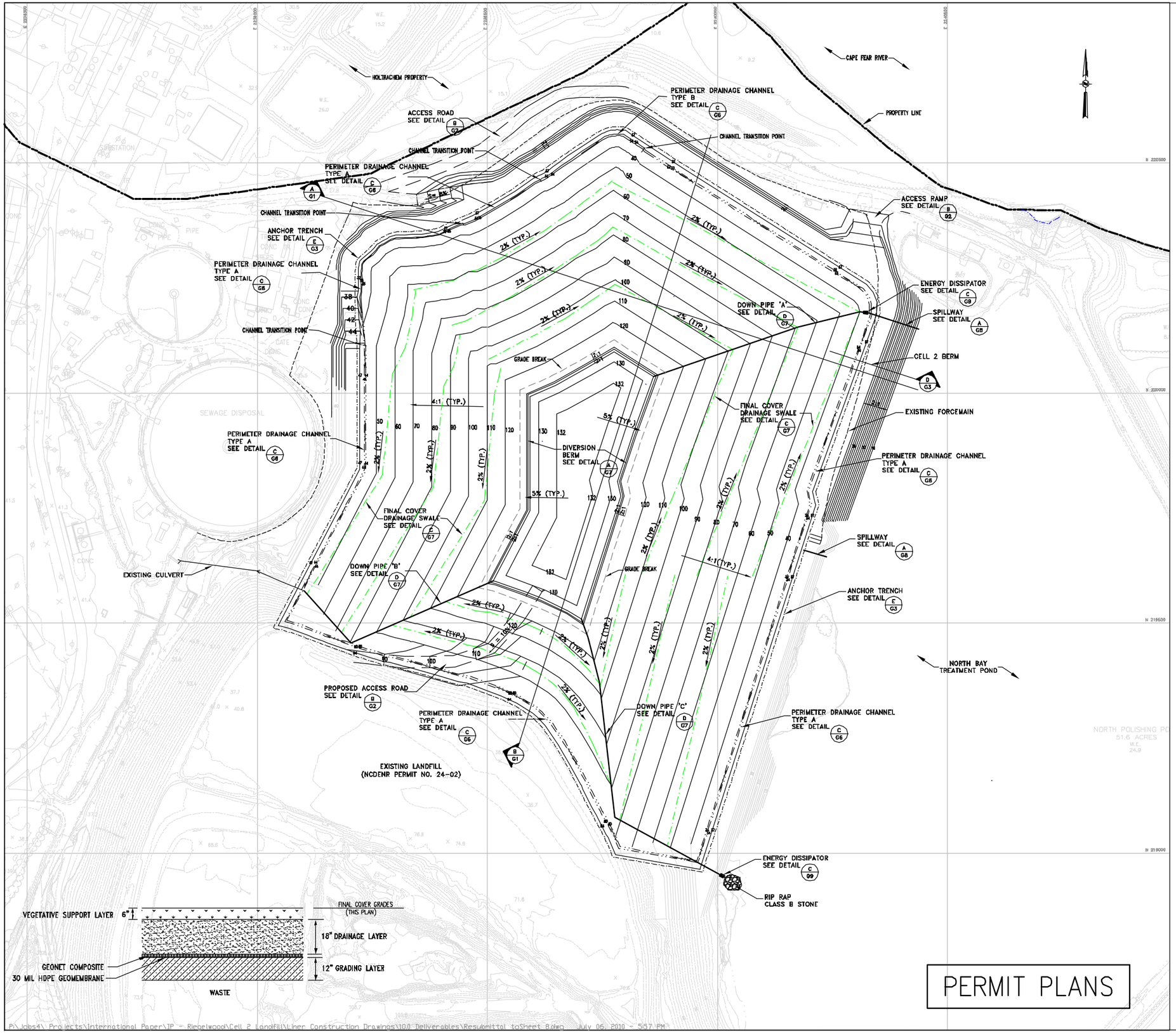

PERMIT PLANS

LEGEND

- SPOT ELEVATION
- EXISTING 10' CONTOUR
- EXISTING 2' CONTOUR
- PROPOSED TOP OF FINAL COVER CONTOUR
- PROPERTY LINE
- ANCHOR TRENCH
- EXISTING FORCEMAIN
- PERIMETER DRAINAGE CHANNEL
- INTERMEDIATE DRAINAGE SWALE
- DOWN PIPE
- ACCESS ROAD
- FENCE LINE
- TREE LINE
- UTILITY POLE
- AERIAL SURVEY MONUMENT

REFERENCES

1. THIS MAP COMPILED BY PHOTOGRAMMETRIC METHODS FROM AERIAL PHOTOGRAPHY DATED 3/14/01 BY AIR SURVEY CORPORATION, 45180 BUSINESS COURT, DULLES, VIRGINIA 20166-6706 AS APPROVED BY INTERNATIONAL PAPER COMPANY.
2. COORDINATE SYSTEM IS NORTH CAROLINA STATE PLANE GRID, 1983, US FEET.
3. ELEVATIONS ARE IN FEET AND REFERENCED TO MEAN SEA LEVEL (MSL) NATIONAL GEODETIC VERTICAL DATUM (NGVD).
4. PLANT ELEVATION DATUM 0.00 FEET IS REPORTED BY McKIM & CREED (REFERENCE DAVID B. GOLDSTONE, JR., REGISTERED SURVEYOR, WHITEVILLE, NC) TO BE EL. -3.76 NGVD; THUS, EL. 43.76 PLANT DATUM = EL. 40.00 NGVD.
5. TOPOGRAPHY OF AS-BUILT SUBGRADE ELEVATIONS OF CELL 1 BASED ON DRAWING ENTITLED INTERNATIONAL PAPER COMPANY, RIEGELWOOD PAPER MILL, SHEET 1 OF 5, BY BRUNSWICK SURVEYING, INC., DATED 2003.
6. TOPOGRAPHY SURVEY OF CELL 2 AND ACTIVE FILLING AREA OF CELL 1 ARE BASED MARCH 2, 2009 TOPOGRAPHIC SURVEY BY URS CORPORATION.

100 0 50 100
SCALE IN FEET

REFERENCE DRAWINGS

DRAWING NO.	TITLE

NOTES:

Certification:
This project was conducted under my direct and responsible charge.

NORTH CAROLINA PROFESSIONAL SEAL 26500 ENGINEER CONAN D. FITZGERALD

Conan D. Fitzgerald, PE — URS Corporation-NC
26500 — PE Registration No.
7/6/2010 — Date

NO.	DATE	REVISIONS	DWN	CKD	APPD
1	12/2009	MODIFIED THE DATE	L.G.	R.L.	R.L.

DRAWN BY L.G. 4/2009	DATE DATE	CHECKED BY R.L. 4/23/2009	DATE DATE
DESIGNED BY L.G. 4/2009	DATE DATE	APPROVED BY	DATE DATE

CONFIDENTIAL-ALL RIGHTS RESERVED-PROPERTY OF
URS
RALEIGH, NORTH CAROLINA 27560

INTERNATIONAL PAPER
RIEGELWOOD, NORTH CAROLINA

COPYRIGHT © INTERNATIONAL PAPER DATED

TECHNICAL - ENVIRONMENTAL
LINER SYSTEM DRAWINGS
RIEGELWOOD MILL LANDFILL CELL 2
FINAL COVER GRADING PLAN
SHEET 8 OF 21

DR. BY: L.G.	SCALE: AS SHOWN	JOB #: 31826746	
ENG. BY: L.G.	DATE: DATE:	DRAWING NO.	REV.
PREV. DWG. #: N/A		E7	1
EDMS DOCUMENT			
IP CAD#: 060-0800.DWG			

P:\Jobs4\ Projects\International Paper\IP - Riegelwood\Cell 2 LandFill\Liner Construction Drawings\10.0 Deliverables\Resubmittal toSheet 8.dwg July 06, 2010 - 5:57 PM

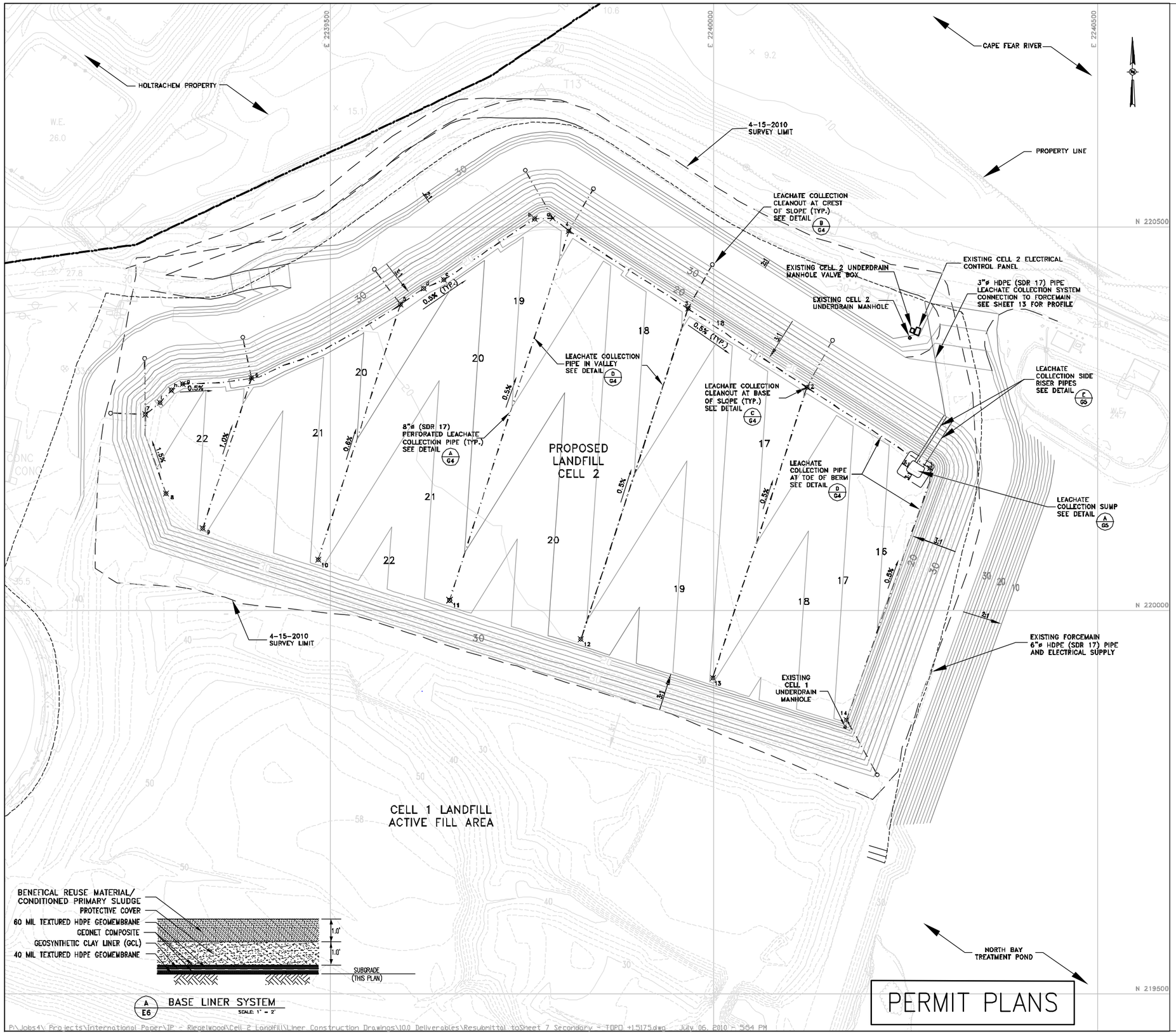

LEACHATE CONTROL POINTS			
NODE ID	NORTHING	EASTING	PIPE INVERT
1	220184.39	2240283.42	15.00
2	220289.87	2240122.54	15.97
3	220392.61	2239967.65	16.90
4	220493.87	2239812.29	17.83
5	220398.31	2239592.83	19.12
6	220301.90	2239398.43	20.21
7	220254.72	2239260.19	20.98
8	220151.51	2239287.32	22.60
9	220106.09	2239335.14	22.20
10	220065.29	2239485.42	21.20
11	220012.51	2239656.73	20.36
12	219961.41	2239827.97	19.17
13	219911.27	2239999.98	17.96
14	219856.59	2240174.30	16.87

NOTES:

LEGEND

- SPOT ELEVATION
- EXISTING 10' CONTOUR
- EXISTING 2' CONTOUR
- PROPOSED SUBGRADE CONTOUR
- PROPERTY LINE
- ANCHOR TRENCH
- EXISTING FORCEMAIN
- PROPOSED ACCESS ROAD
- STREAM OR POND
- WATER
- FENCE LINE
- TREE LINE
- UTILITY POLE
- AERIAL SURVEY MONUMENT
- CLEANOUT

REFERENCES

1. THIS MAP COMPILED BY PHOTOGRAMMETRIC METHODS FROM AERIAL PHOTOGRAPHY DATED 3/14/01 BY AIR SURVEY CORPORATION, 45180 BUSINESS COURT, DULLES, VIRGINIA 20166-6706 AS APPROVED BY INTERNATIONAL PAPER COMPANY.
2. COORDINATE SYSTEM IS NORTH CAROLINA STATE PLANE GRID, 1983, US FEET.
3. ELEVATIONS ARE IN FEET AND REFERENCED TO MEAN SEA LEVEL (MSL) NATIONAL GEODETIC VERTICAL DATUM (NGVD).
4. PLANT ELEVATION DATUM 0.00 FEET IS REPORTED BY McKIM & CREED (REFERENCE DAVID B. GOLDSTONE, JR., REGISTERED SURVEYOR, WHITEVILLE, NC) TO BE EL. -3.76 NGVD; THUS, EL. 43.76 PLANT DATUM = EL. 40.00 NGVD.
5. TOPOGRAPHY OF AS-BUILT SUBGRADE ELEVATIONS OF CELL 1 BASED ON DRAWING ENTITLED INTERNATIONAL PAPER COMPANY, RIEGELWOOD PAPER MILL, SHEET 1 OF 5, BY BRUNSWICK SURVEYING, INC., DATED 2003.
6. TOPOGRAPHY SURVEY OF CELL 1 ACTIVE FILLING AREA ARE BASED ON MARCH 2, 2009 TOPOGRAPHIC SURVEY BY URS CORPORATION.
7. TOPOGRAPHY SURVEY OF CELL 2 ARE BASED ON APRIL 15, 2010 TOPOGRAPHY SURVEY BY URS CORPORATION.

60 0 30 60
SCALE IN FEET

REFERENCE DRAWINGS

DRAWING NO.	TITLE

Certification:
This project was conducted under my direct and responsible charge.

NORTH CAROLINA PROFESSIONAL SEAL 26500 ENGINEER CONAN D. FITZGERALD

Conan D. Fitzgerald, PE
URS Corporation-NC

26500 PE Registration No.

7/6/2010 Date

NO.	DATE	REVISIONS	DWN	CKD	APPD
2	5/2010	MODIFIED THE EXISTING & SUBGRADE CONTOURS IN CELL 2	L.G.	R.L.	R.L.
1	12/2009	MODIFIED THE BASE LINER SYSTEM DETAIL	L.G.	R.L.	R.L.

DRAWN BY L.G.	4/2009 DATE DATE	CHECKED BY R.L.	4/23/2009 DATE DATE
DESIGNED BY L.G.	4/2009 DATE DATE	APPROVED BY	DATE DATE

CONFIDENTIAL-ALL RIGHTS RESERVED-PROPERTY OF

URS
RALEIGH, NORTH CAROLINA 27560

INTERNATIONAL PAPER
RIEGELWOOD, NORTH CAROLINA

COPYRIGHT © INTERNATIONAL PAPER DATED

TECHNICAL - ENVIRONMENTAL
LINER SYSTEM DRAWINGS
RIEGELWOOD MILL LANDFILL CELL 2
LEACHATE MANAGEMENT PLAN
SHEET 7 OF 21

DR. BY: LG	SCALE: AS SHOWN	JOB #: 31826746	
ENG. BY: L.G.	DATE: DATE:	DRAWING NO.	REV.
PREV. DWG. #: N/A		E6	2
EDMS DOCUMENT			
IP CAD#: 080-0600.DWG			

P:\Jobs4\ Projects\International Paper\IP - Riegelwood\Cell 2 Landfill\Liner Construction Drawings\10.0 Deliverables\Resubmittal toSheet 7 Secondary - TOPO +1.5175.dwg - July 06, 2010 - 5:54 PM

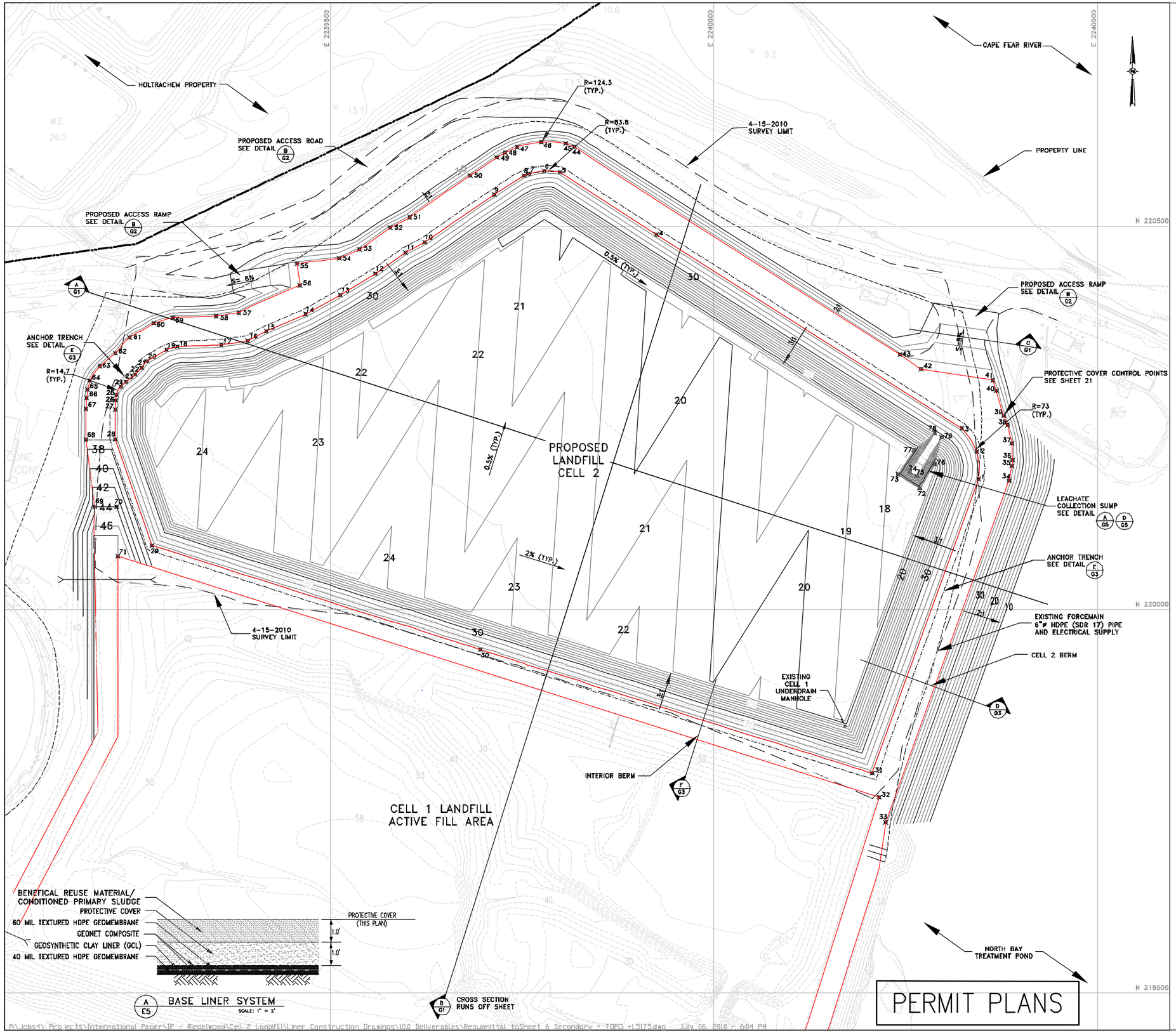

A/E5 BASE LINER SYSTEM
SCALE: 1" = 2'

PERMIT PLANS

NOTES:

1. SEE SHEET 21 FOR PROTECTIVE COVER CONTROL POINTS.

LEGEND

- SPOT ELEVATION
- EXISTING 10' CONTOUR
- EXISTING 2' CONTOUR
- PROPOSED TOP OF PROTECTIVE COVER CONTOUR
- CREST OF PROTECTIVE COVER ELEVATION 37.0
- PROPERTY LINE
- ANCHOR TRENCH
- EXISTING FORCEMAIN
- PROPOSED ACCESS ROAD
- STREAM OR POND
- WATER
- FENCE LINE
- TREE LINE
- UTILITY POLE
- AERIAL SURVEY MONUMENT

REFERENCES

1. THIS MAP COMPILED BY PHOTOGRAMMETRIC METHODS FROM AERIAL PHOTOGRAPHY DATED 3/14/01 BY AIR SURVEY CORPORATION, 45180 BUSINESS COURT, DULLES, VIRGINIA 20166-6706 AS APPROVED BY INTERNATIONAL PAPER COMPANY.
2. COORDINATE SYSTEM IS NORTH CAROLINA STATE PLANE GRID, 1983, US FEET.
3. ELEVATIONS ARE IN FEET AND REFERENCED TO MEAN SEA LEVEL (MSL) NATIONAL GEODETIC VERTICAL DATUM (NGVD).
4. PLANT ELEVATION DATUM 0.00 FEET IS REPORTED BY McKIM & CREED (REFERENCE DAVID B. GOLDSTONE, JR., REGISTERED SURVEYOR, WHITEVILLE, NC) TO BE EL. -3.76 NGVD; THUS, EL. 43.76 PLANT DATUM = EL. 40.00 NGVD.
5. TOPOGRAPHY OF AS-BUILT SUBGRADE ELEVATIONS OF CELL 1 BASED ON DRAWING ENTITLED INTERNATIONAL PAPER COMPANY, RIEGELWOOD PAPER MILL, SHEET 1 OF 5, BY BRUNSWICK SURVEYING, INC., DATED 2003.
6. TOPOGRAPHY SURVEY OF CELL 1 ACTIVE FILLING AREA ARE BASED ON MARCH 2, 2009 TOPOGRAPHIC SURVEY BY URS CORPORATION.
7. TOPOGRAPHY SURVEY OF CELL 2 ARE BASED ON APRIL 15, 2010 TOPOGRAPHY SURVEY BY URS CORPORATION.

60 0 30 60
SCALE IN FEET

REFERENCE DRAWINGS

DRAWING NO.	TITLE

Certification:
This project was conducted under my direct and responsible charge.

NORTH CAROLINA PROFESSIONAL SEAL 26500 ENGINEER CONAN D. FITZGERALD

Conan D. Fitzgerald, PE — URS Corporation—NC
26500 — PE Registration No.
7/6/2010 — Date

NO.	DATE	REVISIONS	DWN	CKD	APPD
2	5/2010	MODIFIED THE EXISTING & SUBGRADE CONTOURS IN CELL 2	L.G.	R.L.	R.L.
1	12/2009	MODIFIED THE BASE LINER SYSTEM DETAIL	L.G.	R.L.	R.L.

DRAWN BY L.G.	4/2009 DATE DATE	CHECKED BY R.L.	4/23/2009 DATE DATE
DESIGNED BY L.G.	4/2009 DATE DATE	APPROVED BY	DATE DATE

CONFIDENTIAL-ALL RIGHTS RESERVED-PROPERTY OF
URS
RALEIGH, NORTH CAROLINA 27560

INTERNATIONAL PAPER
RIEGELWOOD, NORTH CAROLINA

COPYRIGHT © INTERNATIONAL PAPER DATED

TECHNICAL - ENVIRONMENTAL
LINER SYSTEM DRAWINGS
RIEGELWOOD MILL LANDFILL CELL 2
PROTECTIVE COVER GRADING PLAN
SHEET 6 OF 21

DR. BY: LG	SCALE: AS SHOWN	JOB #: 31826746	
ENG. BY: L.G.	DATE: DATE:	DRAWING NO.	REV.
PREV. DWG. #: N/A		E5	2
EDMS DOCUMENT			
IP CAD#: 080-0600.DWG			

P:\Jobs4\Projects\International Paper\IP - Riegelwood\Cell 2 Landfill\Liner Construction Drawings\100 Deliverables\Resubmittal toSheet 6 Secondary - TOPO +15175.dwg - July 06, 2010 - 6:04 PM

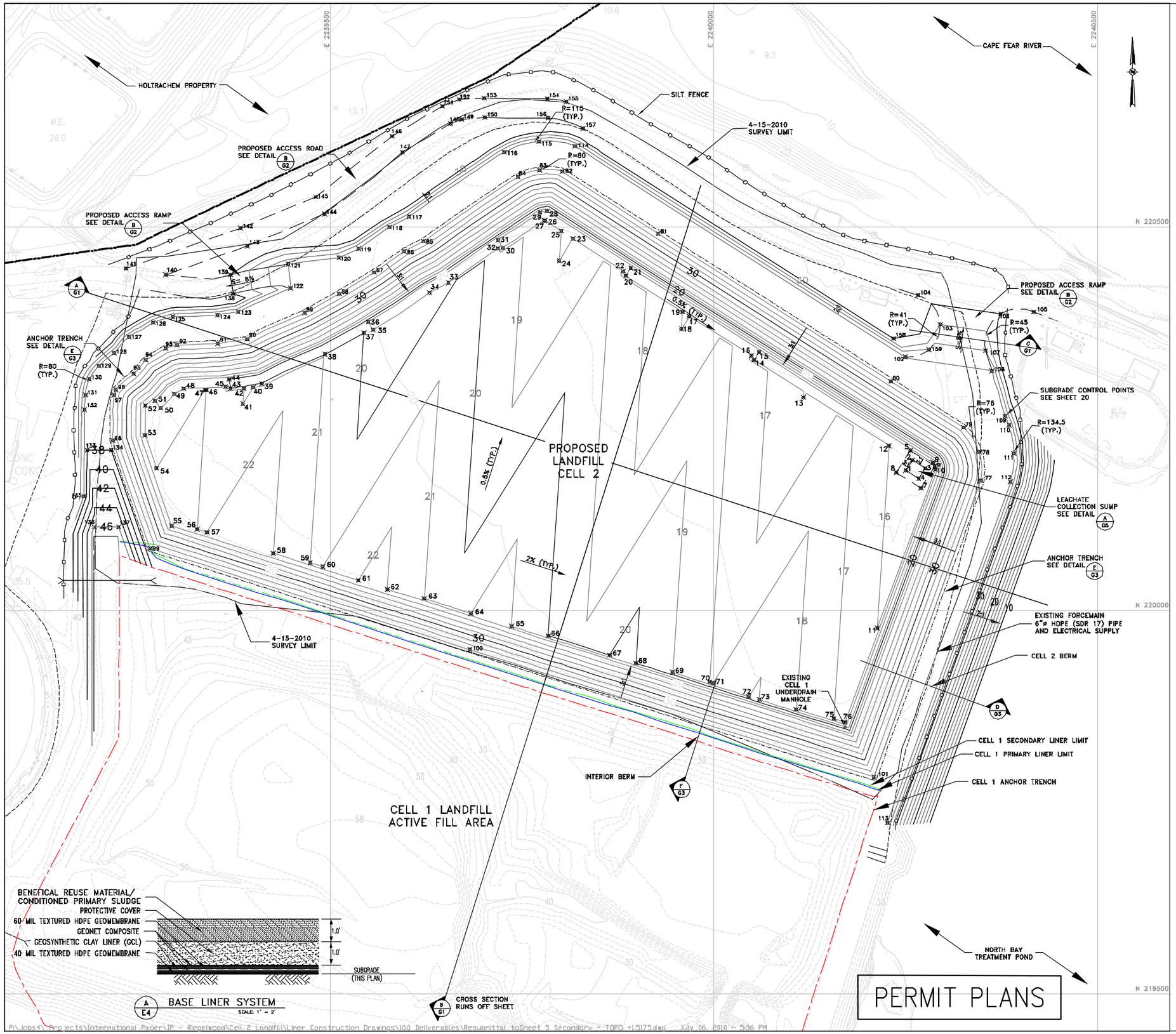

NOTES:

1. SEE SHEET 20 FOR SUBGRADE CONTROL POINTS.

LEGEND

x.xx	SPOT ELEVATION
50	EXISTING 10' CONTOUR
	EXISTING 2' CONTOUR
	PROPOSED SUBGRADE CONTOUR
	PROPERTY LINE
	ANCHOR TRENCH
	EXISTING FORCEMAIN
	PROPOSED ACCESS ROAD
	STREAM OR POND
	WATER
	FENCE LINE
	TREE LINE
	UTILITY POLE
	AERIAL SURVEY MONUMENT
⊗ 68	SUBGRADE CONSTRUCTION CONTROL POINTS SEE NOTE 1
	SILT FENCE

REFERENCES

1. THIS MAP COMPILED BY PHOTOGRAMMETRIC METHODS FROM AERIAL PHOTOGRAPHY DATED 3/14/01 BY AIR SURVEY CORPORATION, 45180 BUSINESS COURT, DULLES, VIRGINIA 20166-6706 AS APPROVED BY INTERNATIONAL PAPER COMPANY.
2. COORDINATE SYSTEM IS NORTH CAROLINA STATE PLANE GRID, 1983, US FEET.
3. ELEVATIONS ARE IN FEET AND REFERENCED TO MEAN SEA LEVEL (MSL) NATIONAL GEODETIC VERTICAL DATUM (NGVD).
4. PLANT ELEVATION DATUM 0.00 FEET IS REPORTED BY McKIM & CREED (REFERENCE DAVID B. GOLDSTONE, JR., REGISTERED SURVEYOR, WHITEVILLE, NC) TO BE EL. -3.76 NGVD; THUS, EL. 43.76 PLANT DATUM = EL. 40.00 NGVD.
5. TOPOGRAPHY OF AS-BUILT SUBGRADE ELEVATIONS OF CELL 1 BASED ON DRAWING ENTITLED INTERNATIONAL PAPER COMPANY, RIEGELWOOD PAPER MILL, SHEET 1 OF 5, BY BRUNSWICK SURVEYING, INC., DATED 2003.
6. TOPOGRAPHY SURVEY OF CELL 1 ACTIVE FILLING AREA ARE BASED ON MARCH 2, 2009 TOPOGRAPHIC SURVEY BY URS CORPORATION.
7. TOPOGRAPHY SURVEY OF CELL 2 ARE BASED ON APRIL 15, 2010 TOPOGRAPHY SURVEY BY URS CORPORATION.

REFERENCE DRAWINGS

DRAWING NO.	TITLE

Certification:
This project was conducted under my direct and responsible charge.

NORTH CAROLINA PROFESSIONAL SEAL 26500 ENGINEER CONAN D. FITZGERALD

Conan D. Fitzgerald, PE — 26500 — 7/6/2010
URS Corporation-NC — PE Registration No. — Date

NO.	DATE	REVISIONS	DWN	CKD	APPD
2	5/2010	MODIFIED THE EXISTING & SUBGRADE CONTOURS IN CELL 2	L.G.	R.L.	R.L.
1	12/2009	MODIFIED THE BASE LINER SYSTEM DETAIL	L.G.	R.L.	R.L.

DRAWN BY L.G. 4/2009	DATE DATE	CHECKED BY R.L. 4/23/2009	DATE DATE
DESIGNED BY L.G. 4/2009	DATE DATE	APPROVED BY	DATE DATE

CONFIDENTIAL-ALL RIGHTS RESERVED-PROPERTY OF

URS
RALEIGH, NORTH CAROLINA 27560

INTERNATIONAL PAPER
RIEGELWOOD, NORTH CAROLINA

COPYRIGHT © INTERNATIONAL PAPER DATED

TECHNICAL - ENVIRONMENTAL
LINER SYSTEM DRAWINGS
RIEGELWOOD MILL LANDFILL CELL 2
SUBGRADE GRADING PLAN
SHEET 5 OF 21

DR. BY: L.G.	SCALE: AS SHOWN	JOB #: 31826746	
ENG. BY: L.G.	DATE: DATE:	DRAWING NO.	REV.
PREV. DWG. #: N/A		E4	2
EDMS DOCUMENT			
IP CAD#: 080-0600.DWG			

P:\Jobs4\Projects\International Paper\IP - Riegelwood\Cell 2 Landfill\Liner Construction Drawings\10.0 Deliverables\Resubmittal toSheet 5 Secondary - TOPO +15175.dwg - July 06, 2010 - 5:26 PM

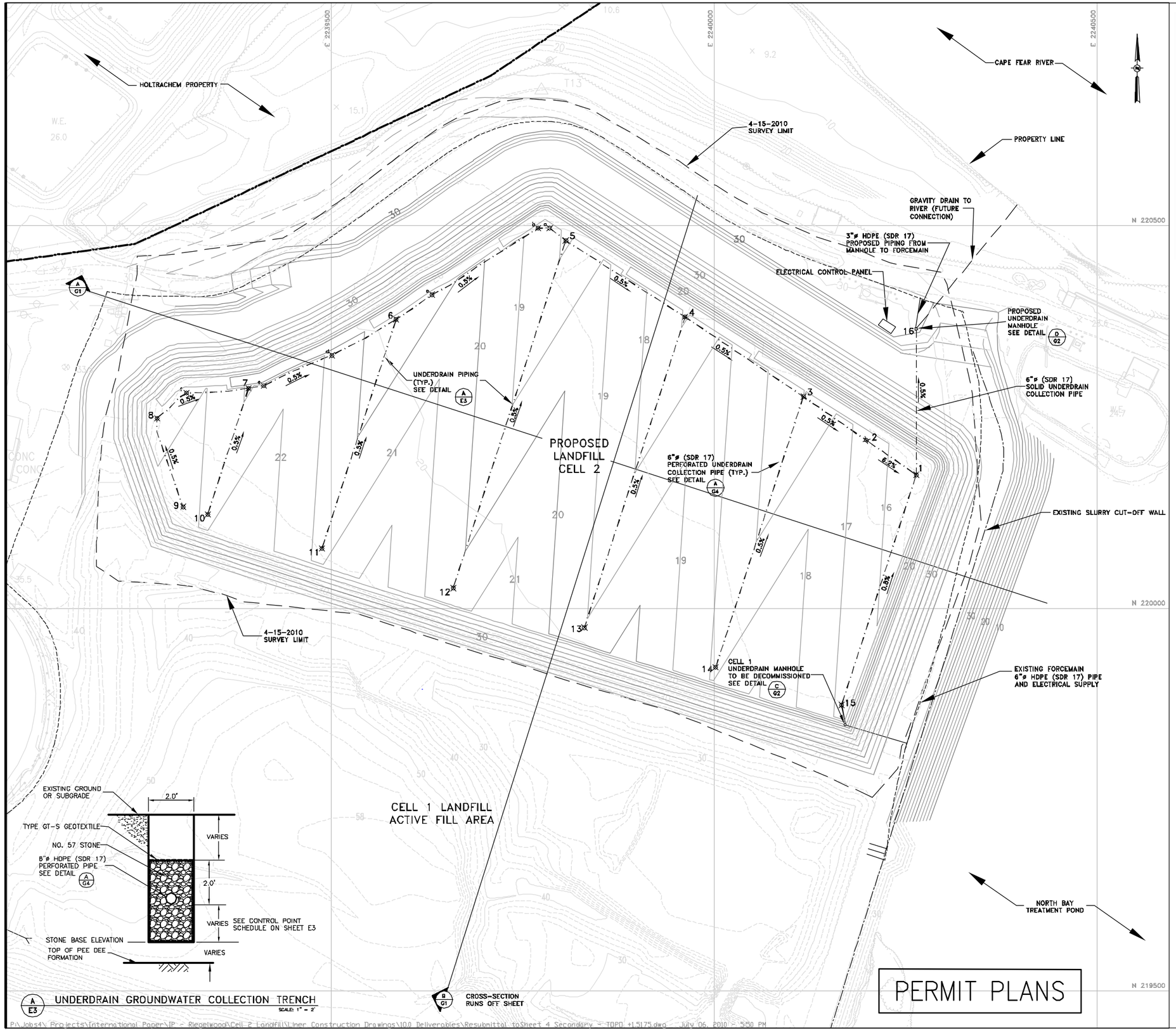

A/E3 UNDERDRAIN GROUNDWATER COLLECTION TRENCH
SCALE: 1" = 2'

PERMIT PLANS

UNDERDRAIN CONTROL POINTS				
NODE ID	NORTHING	EASTING	PIPE INVERT	STONE BASE ELEV
1	220173.70	2240265.34	6.00	6.00
2	220218.82	2240200.19	10.90	9.50
3	220275.82	2240117.99	11.40	9.50
4	220379.98	2239963.55	12.33	9.50
5	220479.80	2239807.73	13.26	9.50
6	220376.88	2239586.27	14.57	14.57
7	220286.97	2239393.58	15.64	15.64
8	220247.69	2239273.84	16.30	16.30
9	220131.82	2239307.81	16.91	16.91
10	220122.07	2239340.20	16.51	16.51
11	220077.20	2239489.24	16.14	16.14
12	220025.59	2239660.68	15.65	15.65
13	219973.99	2239832.02	14.46	14.46
14	219922.36	2240003.57	13.26	13.26
15	219872.90	2240167.85	8.40	8.40
16	220362.94	2240265.14	5.00	5.00

NOTES:

LEGEND

- SPOT ELEVATION
- EXISTING 10' CONTOUR
- EXISTING 2' CONTOUR
- PROPOSED SUBGRADE CONTOUR
- PROPERTY LINE
- UNDERDRAIN COLLECTION PIPE
- EXISTING SLURRY CUT-OFF WALL
- EXISTING FORCEMAIN
- STREAM OR POND
- WATER
- FENCE LINE
- TREE LINE
- UTILITY POLE
- AERIAL SURVEY MONUMENT
- PIPE INVERT ELEVATION CONTROL POINT

REFERENCES

1. THIS MAP COMPILED BY PHOTOGRAMMETRIC METHODS FROM AERIAL PHOTOGRAPHY DATED 3/14/01 BY AIR SURVEY CORPORATION, 45180 BUSINESS COURT, DULLES, VIRGINIA 20166-6706 AS APPROVED BY INTERNATIONAL PAPER COMPANY.
2. COORDINATE SYSTEM IS NORTH CAROLINA STATE PLANE GRID, 1983, US FEET.
3. ELEVATIONS ARE IN FEET AND REFERENCED TO MEAN SEA LEVEL (MSL) NATIONAL GEODETIC VERTICAL DATUM (NGVD).
4. PLANT ELEVATION DATUM 0.00 FEET IS REPORTED BY McKIM & CREED (REFERENCE DAVID B. GOLDSTONE, JR., REGISTERED SURVEYOR, WHITEVILLE, NC) TO BE EL. -3.76 NGVD; THUS, EL. 43.76 PLANT DATUM = EL. 40.00 NGVD.
5. TOPOGRAPHY OF AS-BUILT SUBGRADE ELEVATIONS OF CELL 1 BASED ON DRAWING ENTITLED INTERNATIONAL PAPER COMPANY, RIEGELWOOD PAPER MILL, SHEET 1 OF 5, BY BRUNSWICK SURVEYING, INC., DATED 2003.
6. TOPOGRAPHY SURVEY OF CELL 1 ACTIVE FILLING AREA ARE BASED ON MARCH 2, 2009 TOPOGRAPHIC SURVEY BY URS CORPORATION.
7. TOPOGRAPHY SURVEY OF CELL 2 ARE BASED ON APRIL 15, 2010 TOPOGRAPHY SURVEY BY URS CORPORATION.
8. SLURRY WALL ALIGNMENT SURVEYED BY BRUNSWICK SURVEYING, INC. 1027 SABBATH HOME ROAD, SW, SUPPLY, N.C. 28462.

60 0 30 60
SCALE IN FEET

REFERENCE DRAWINGS	
DRAWING NO.	TITLE

Certification:
This project was conducted under my direct and responsible charge.

NORTH CAROLINA PROFESSIONAL SEAL 26500 ENGINEER CONAN D. FITZGERALD

Conan D. Fitzgerald, PE — URS Corporation-NC | 26500 PE Registration No. | 7/6/2010 Date

NO.	DATE	REVISIONS	DWN	CKD	APPD
2	5/2010	MODIFIED THE EXISTING & SUBGRADE CONTOURS IN CELL 2	L.G.	R.L.	R.L.
1	12/2009	MODIFIED THE DATE	L.G.	R.L.	R.L.

DRAWN BY L.G.	4/2009 DATE	CHECKED BY R.L.	4/23/2009 DATE
DESIGNED BY L.G.	4/2009 DATE	APPROVED BY	DATE

CONFIDENTIAL-ALL RIGHTS RESERVED-PROPERTY OF
URS
RSU, NORTH CAROLINA 27560

INTERNATIONAL PAPER
RIEGELWOOD, NORTH CAROLINA

COPYRIGHT © INTERNATIONAL PAPER DATED:

TECHNICAL - ENVIRONMENTAL

LINER SYSTEM DRAWINGS
RIEGELWOOD MILL LANDFILL CELL 2
UNDERDRAIN LAYOUT AND PIPING
SHEET 4 OF 21

DR. BY: LG	SCALE: AS SHOWN	JOB #: 31826746	
ENG. BY: L.G.	DATE:	DATE:	DRAWING NO. E3
PREV. DWG. #: N/A			REV. 2
EDMS DOCUMENT			
IP CADD: 000-0000.DWG			

P:\Jobs4\ Projects\International Paper\IP - Riegelwood\Cell 2 Landfill\Liner Construction Drawings\10.0 Deliverables\Resubmittal toSheet 4 Secondary - TOPO +1.5175.dwg - July 06, 2010 - 5:50 PM

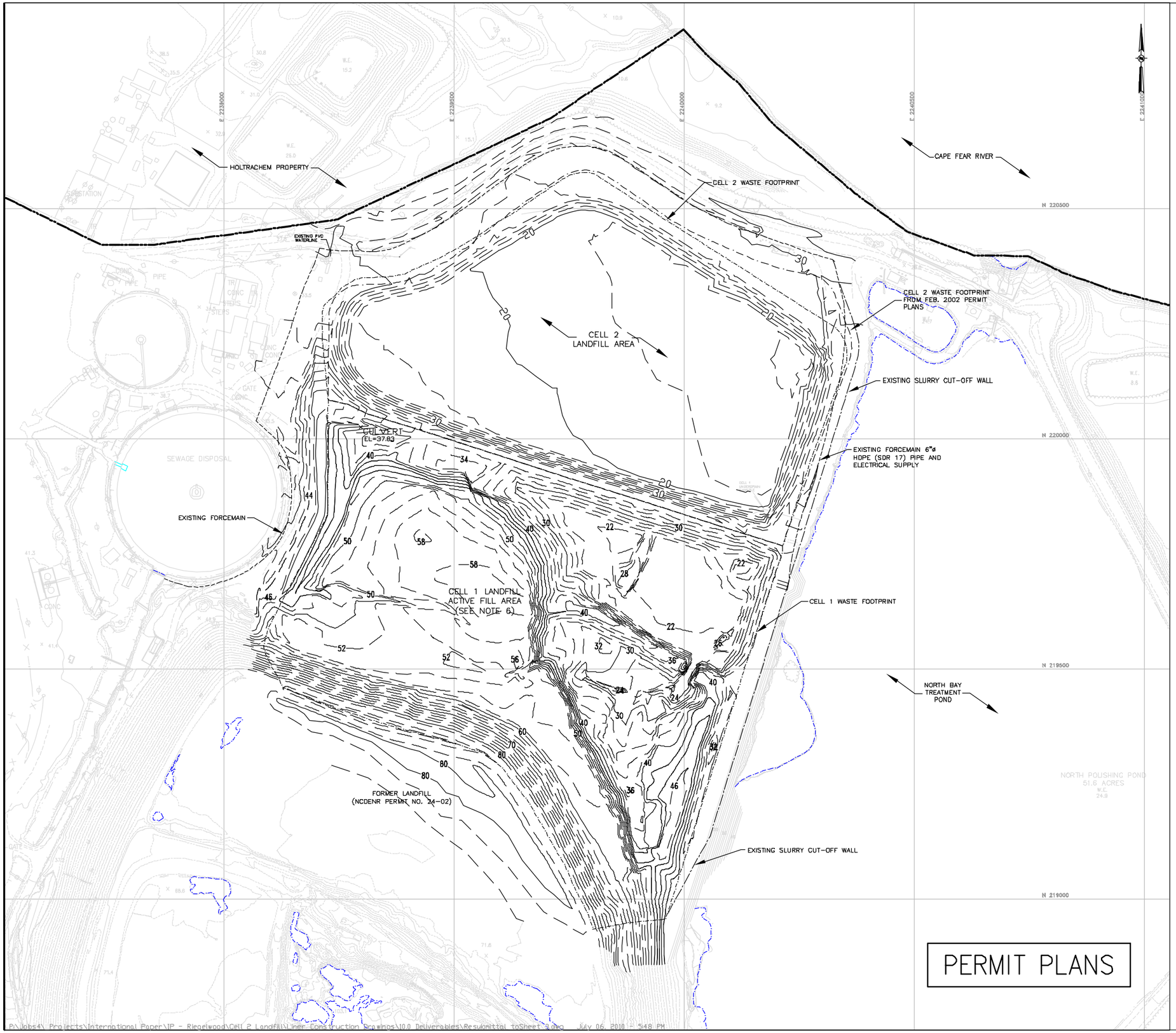

PERMIT PLANS

LEGEND

- SPOT ELEVATION
- 50 — EXISTING 10' CONTOUR
- EXISTING 2' CONTOUR
- PROPERTY LINE
- CELL 1 & 2 WASTE FOOTPRINT 2009 PERMIT PLANS
- CELL 2 WASTE FOOTPRINT FEB 2002 PERMIT PLANS
- EXISTING FORCEMAIN
- EXISTING SLURRY CUT-OFF WALL
- STREAM OR POND
- WATER
- FENCE LINE
- TREE LINE
- UTILITY POLE
- AERIAL SURVEY MONUMENT

REFERENCES

1. THIS MAP COMPILED BY PHOTOGRAMMETRIC METHODS FROM AERIAL PHOTOGRAPHY DATED 3/14/01 BY AIR SURVEY CORPORATION, 45180 BUSINESS COURT, DULLES, VIRGINA 20166-6706 AS APPROVED BY INTERNATIONAL PAPER COMPANY.
2. COORDINATE SYSTEM IS NORTH CAROLINA STATE PLANE GRID, 1983, US FEET.
3. ELEVATIONS ARE IN FEET AND REFERENCED TO MEAN SEA LEVEL (MSL) NATIONAL GEODETIC VERTICAL DATUM (NGVD).
4. PLANT ELEVATION DATUM 0.00 FEET IS REPORTED BY McKIM & CREED (REFERENCE DAVID B. GOLDSTONE, JR., REGISTERED SURVEYOR, WHITEVILLE, NC) TO BE EL. -3.76 NGVD, THUS, EL. 43.76 PLANT DATUM = EL. 40.00 NGVD.
5. TOPOGRAPHY OF AS-BUILT SUBGRADE ELEVATIONS OF CELL 1 BASED ON DRAWING ENTITLED INTERNATIONAL PAPER COMPANY, RIEGELWOOD PAPER MILL, SHEET 1 OF 5, BY BRUNSWICK SURVEYING, INC., DATED 2003.
6. TOPOGRAPHY SURVEY OF CELL 1 ACTIVE FILLING AREA ARE BASED ON MARCH 2, 2009 TOPOGRAPHIC SURVEY BY URS CORPORATION.
7. TOPOGRAPHY SURVEY OF CELL 2 ARE BASED ON APRIL 15, 2010 TOPOGRAPHY SURVEY BY URS CORPORATION.
8. SLURRY WALL ALIGNMENT SURVEYED BY BRUNSWICK SURVEYING, INC. 1027 SABBATH HONE ROAD, S.W., SUPPLY, N.C. 28462.

100 0 50 100
SCALE IN FEET

REFERENCE DRAWINGS

DRAWING NO.	TITLE

NOTES:

NORTH CAROLINA PROFESSIONAL SEAL 26500 ENGINEER CONAN D. FITZGERALD

Certification:
This project was conducted under my direct and responsible charge.

Conan D. Fitzgerald, PE — URS Corporation-NC
26500 — PE Registration No.
7/6/2010 — Date

NO.	DATE	REVISIONS	DWN	CKD	APPD
2	4/2010	MODIFIED THE EXISTING CONTOURS	L.G.	R.L.	R.L.
1	12/2009	MODIFIED THE DATE	L.G.	R.L.	R.L.

DRAWN BY L.G.	4/2009 DATE DATE	CHECKED BY R.L.	4/23/2009 DATE DATE
DESIGNED BY L.G.	4/2009 DATE DATE	APPROVED BY	DATE DATE

CONFIDENTIAL-ALL RIGHTS RESERVED-PROPERTY OF
URS
RDU, NORTH CAROLINA 27560

INTERNATIONAL PAPER
RIEGELWOOD, NORTH CAROLINA

COPYRIGHT © INTERNATIONAL PAPER DATED:

TECHNICAL - ENVIRONMENTAL

LINER SYSTEM DRAWINGS
RIEGELWOOD MILL LANDFILL CELL 2
EXISTING CONDITIONS
SHEET 3 OF 21

DR. BY: L.G.	SCALE: AS SHOWN	JOB #: 38826746	
ENG. BY: L.G.	DATE: DATE:	DRAWING NO.	REV.
PREV. DWG. #: N/A		E2	2
EDMS DOCUMENT			
IP CAD#: 000-0000.DWG			

P:\Jobs4\ Projects\International Paper\IP - Riegelwood\Cell 2 Landfill\Liner Construction Drawings\10.0 Deliverables\Resubmittal_toSheet 3.dwg July 06, 2010 - 5:48 PM

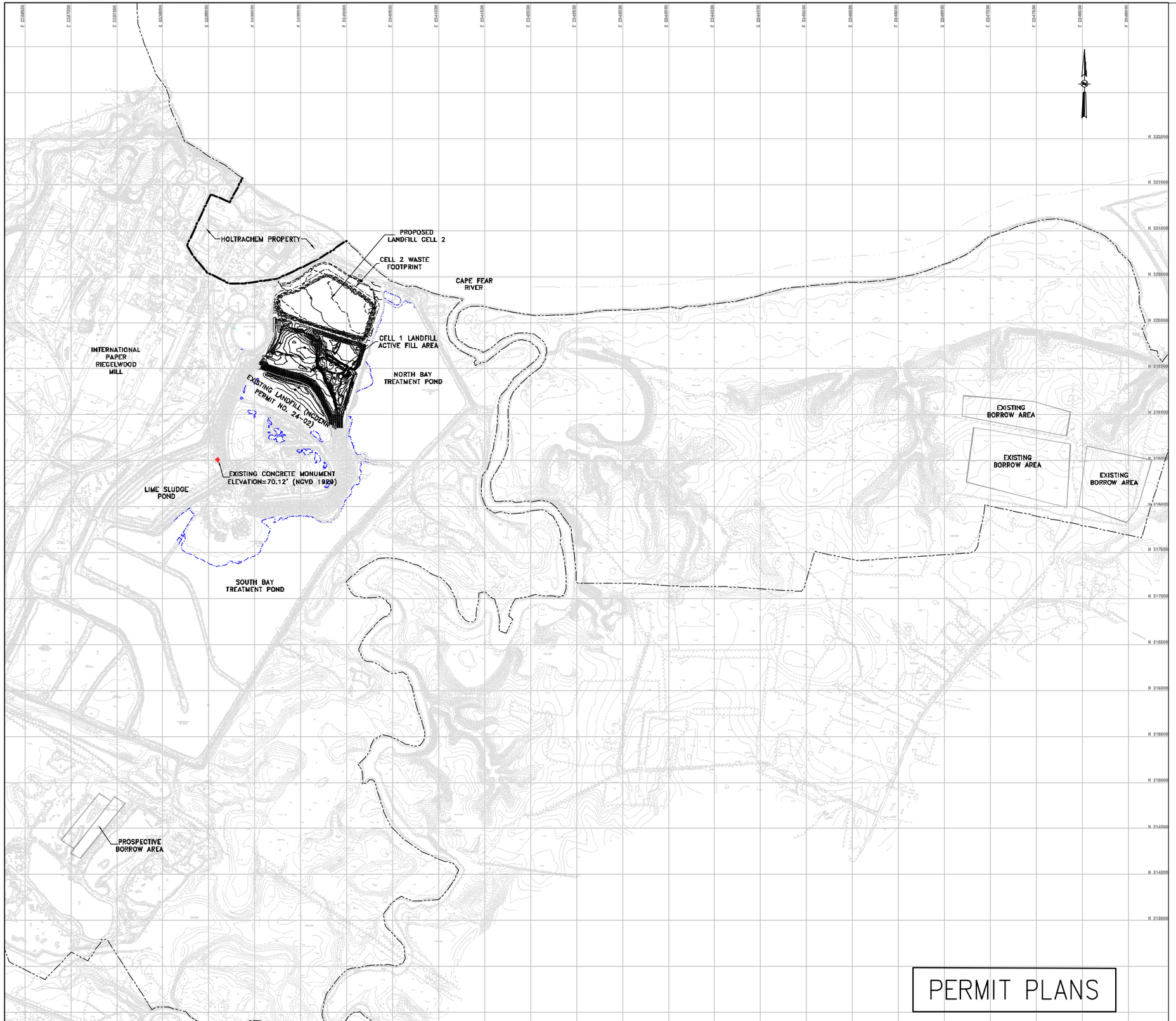

LEGEND

- SPOT ELEVATION
- 50 — EXISTING 10' CONTOUR FOR CELL 1 & 2
- EXISTING 2' CONTOUR FOR CELL 1 & 2
- PROPERTY LINE
- CELL 2 WASTE FOOTPRINT
- EXISTING FORCEMAIN
- STREAM OR POND
- WATER
- FENCE LINE
- TREE LINE
- UTILITY POLE
- AERIAL SURVEY MONUMENT
- EXISTING CONCRETE MONUMENT

REFERENCES

1. THIS MAP COMPILED BY PHOTOGRAMMETRIC METHODS FROM AERIAL PHOTOGRAPHY DATED 3/14/01 BY AIR SURVEY CORPORATION, 45180 BUSINESS COURT, DULLES, VIRGINIA 20166-6706 AS APPROVED BY INTERNATIONAL PAPER COMPANY.
2. COORDINATE SYSTEM IS NORTH CAROLINA STATE PLANE GRID, 1983, US FEET.
3. ELEVATIONS ARE IN FEET AND REFERENCED TO MEAN SEA LEVEL (MSL) NATIONAL GEODETIC VERTICAL DATUM (NGVD).
4. PLANT ELEVATION DATUM 0.00 FEET IS REPORTED BY McKIM & CREED (REFERENCE DAVID B. GOLDSTONE, JR., REGISTERED SURVEYOR, WHITEVILLE, NC) TO BE EL. -3.76 NGVD; THUS, EL. 43.76 PLANT DATUM = EL. 40.00 NGVD.
5. TOPOGRAPHY OF AS-BUILT SUBGRADE ELEVATIONS OF CELL 1 BASED ON DRAWING ENTITLED INTERNATIONAL PAPER COMPANY, RIEGELWOOD PAPER MILL, SHEET 1 OF 5, BY BRUNSWICK SURVEYING, INC., DATED 2003.
6. TOPOGRAPHY SURVEY OF CELL 1 ACTIVE FILLING AREA ARE BASED ON MARCH 2, 2009 TOPOGRAPHIC SURVEY BY URS CORPORATION.
7. TOPOGRAPHY SURVEY OF CELL 2 ARE BASED ON APRIL 15, 2010 TOPOGRAPHY SURVEY BY URS CORPORATION.

500 0 250 500
SCALE IN FEET

REFERENCE DRAWINGS	
DRAWING NO.	TITLE

NOTES:

Certification:
This project was conducted under my direct and responsible charge.

NORTH CAROLINA PROFESSIONAL SEAL 26500 ENGINEER CONAN D. FITZGERALD

Conan D. Fitzgerald, PE — URS Corporation-NC
26500 — PE Registration No.
7/6/2010 — Date

NO.	DATE	REVISIONS	DWN	CKD	APPD
2	4/2010	MODIFIED THE EXISTING CONTOURS	L.G.	R.L.	R.L.
1	12/2009	MODIFIED THE DATE	L.G.	R.L.	R.L.

DRAWN BY T.S.H.	4/2009 DATE	CHECKED BY R.L.	4/23/2009 DATE
DESIGNED BY L.G.	4/2009 DATE	APPROVED BY	DATE

CONFIDENTIAL—ALL RIGHTS RESERVED—PROPERTY OF
URS
RALEIGH, NORTH CAROLINA 27560

INTERNATIONAL PAPER
RIEGELWOOD, NORTH CAROLINA

COPYRIGHT © INTERNATIONAL PAPER DATED:

TECHNICAL — ENVIRONMENTAL
LINER SYSTEM DRAWINGS
RIEGELWOOD MILL LANDFILL CELL 2
SITE PLAN
SHEET 2 OF 21

DR. BY: TSH	SCALE: AS SHOWN	JOB #: 31826746	
ENG. BY: LG	DATE: DATE:	DRAWING NO.	REV.
PREV. DWG. #: N/A		E1	2
EDMS DOCUMENT			
IP CAD#: 000-0000.DWG			

LOCATION	N - COORDINATE	E - COORDINATE	ELEVATION
1	220169.4235	2240346.5210	37.0
2	220205.1549	2240343.9947	37.0
3	220235.3459	2240324.7174	37.0
4	220487.9617	2239926.6420	37.0
5	220569.6372	2239800.5660	37.0
6	220571.0265	2239780.3281	37.0
7	220567.5133	2239760.3491	37.0
8	220564.9907	2239754.1789	37.0
9	220540.3369	2239715.2366	37.0
10	220477.9408	2239624.3779	37.0
11	220464.6495	2239599.2676	37.0
12	220437.0992	2239560.1452	37.0
13	220409.1646	2239514.4221	37.0
14	220384.2528	2239469.1503	37.0
15	220362.0135	2239417.8647	37.0
16	220349.6883	2239393.9561	37.0
17	220344.4535	2239359.2177	37.0
18	220342.0240	2239301.9425	37.0
19	220338.0194	2239287.7973	37.0
20	220323.1965	2239262.3273	37.0
21	220314.3730	2239255.2138	37.0
22	220305.5305	2239246.9372	37.0
23	220296.0651	2239235.0643	37.0
24	220289.7567	2239228.2452	37.0
25	220279.2426	2239222.3667	37.0
26	220271.8057	2239221.4971	37.0
27	220259.8607	2239220.7836	37.0
28	220220.9969	2239220.7941	37.0
29	220082.5283	2239268.8161	37.0
30	219946.9778	2239696.9823	37.0
31	219785.6947	2240207.6583	37.0
32	219754.4698	2240216.7541	37.0
33	219721.8126	2240225.3647	37.0
34	220167.2223	2240386.1475	37.0
35	220186.4964	2240389.9372	37.0
36	220194.0464	2240390.7957	37.0
37	220215.9341	2240389.7930	37.0
38	220240.0312	2240384.2711	37.0
39	220251.9165	2240379.2396	37.0

LOCATION	N - COORDINATE	E - COORDINATE	ELEVATION
40	220284.5185	2240369.6337	37.0
41	220298.3607	2240364.9494	37.0
42	220312.7672	2240271.3255	37.0
43	220331.7260	2240243.8294	37.0
44	220602.6669	2239819.4713	37.0
45	220606.7983	2239808.3791	37.0
46	220608.6479	2239775.9881	37.0
47	220602.1883	2239744.8996	37.0
48	220594.9191	2239729.1792	37.0
49	220588.7890	2239718.5874	37.0
50	220565.1287	2239683.6081	37.0
51	220510.6015	2239604.8540	37.0
52	220497.1069	2239579.3595	37.0
53	220468.8064	2239539.1719	37.0
54	220457.1206	2239512.9697	37.0
55	220450.3782	2239457.8748	37.0
56	220421.9950	2239461.8482	37.0
57	220386.2401	2239381.9284	37.0
58	220382.0149	2239352.4731	37.0
59	220379.8370	2239296.3078	37.0
60	220372.4985	2239271.2153	37.0
61	220353.9477	2239239.7982	37.0
62	220333.5187	2239221.0853	37.0
63	220316.3410	2239201.0240	37.0
64	220297.7695	2239187.8863	37.0
65	220286.1283	2239184.9319	37.0
66	220274.9839	2239183.6193	37.0
67	220260.5847	2239182.7591	37.0
68	220220.8634	2239182.7941	37.0
69	220133.1702	2239193.9500	44.0
70	220133.1702	2239222.6755	44.0
71	220068.5894	2239224.5041	47.0
72	220157.4188	2240269.7816	18.0
73	220175.3245	2240241.2278	18.0
74	220178.8119	2240256.8731	29.0
75	220173.0445	2240266.2894	29.0
76	220189.0244	2240289.2710	18.0
77	220207.3826	2240262.4013	18.0
78	220229.3834	2240289.3210	29.0
79	220223.7727	2240298.1625	29.0

PERMIT PLANS

REFERENCE DRAWINGS

DRAWING NO.	TITLE

NOTES:

Certification:
This project was conducted under my direct and responsible charge.

NORTH CAROLINA PROFESSIONAL SEAL 26500 ENGINEER CONAN D. FITZGERALD

Conan D. Fitzgerald, PE
URS Corporation-NC

26500 PE Registration No.

7/6/2010 Date

NO.	DATE	REVISIONS	DWN	CKD	APPD
2	5/2010	MODIFIED THE CONTROL POINTS	L.G.	R.L.	R.L.
1	12/2009	MODIFIED THE DATE	L.G.	R.L.	R.L.

DRAWN BY L.G. 4/2009 DATE DATE
CHECKED BY R.L. 4/23/2009 DATE DATE
DESIGNED BY L.G. 4/2009 DATE DATE
APPROVED BY DATE DATE

CONFIDENTIAL-ALL RIGHTS RESERVED-PROPERTY OF

URS
RALEIGH NORTH CAROLINA 27580

INTERNATIONAL PAPER
RIEGELWOOD, NORTH CAROLINA

COPYRIGHT © INTERNATIONAL PAPER DATED:

TECHNICAL - ENVIRONMENTAL
LINER SYSTEM DRAWINGS
RIEGELWOOD MILL LANDFILL CELL 2
PROTECTIVE COVER CONTROL POINTS
SHEET 21 OF 21

DR. BY: LG | SCALE: AS SHOWN | JOB #: 31826746
ENG. BY: LG | DATE: | DATE:
PREV. DWG. #: N/A
EDMS DOCUMENT
IP CAD#: 000-0000.DWG
DRAWING NO. G12 REV. 2