CDM Transmittal

CDM

5400 Glenwood Avenue, Suite 300
Raleigh, North Carolina 27612
Phone: (919) 787-5620
Fax: (919) 781-5730

RECEIVED

JUN 13 2008

SOLID WASTE SECTION
ASHEVILLE REGIONAL OFFICE

To:	Mr. Allen Gaither, Environmental Engineer	**From:**	Patrick Stout
Organization/ Address:	Solid Waste Section Division of Waste Management 2090 US Highway 70 Swannanoa, NC 28778	**Date:**	June 9, 2008
Re:	Buncombe County		
Job No.:	6447-45144		

Via: *Mail:* *Overnight:* X *Courier:*

Enclosed please find:

For your information	X	**Approved**	
For your review		**Approved as noted**	
For your signature		**Returned to you for correction**	

● **Message:**

Please find enclosed on CD:

Buncombe County Solid Waste Management Facility Permit No. 11-07

Permit Modification Revised Operations Plan

Signed

SECTION 4

OPERATION PLAN

Contents

Section 1 Introduction

1.1 Purpose 1-1
1.2 Facility Location 1-1
1.3 Facility Description 1-1

Section 2 Hours of Operation 2-1

Section 3 Landfill Operating Staff 3-1

3.1 Introduction 3-1
3.2 Positions and Descriptions 3-1

Section 4 Landfill Operating Equipment 4-1

Section 5 Waste Acceptance and Disposal Requirements

5.1 Waste Definitions 5-1
5.2 Acceptable Waste 5-3
5.3 Acceptable Waste Requiring Special Handling 5-4
5.4 Prohibited Wastes 5-5
5.5 Receiving Prohibited Waste 5-6
5.6 Waste Screening Program 5-6

Section 6 Cover Material Requirements

6.1 Daily Cover 6-1
6.2 Intermediate Cover 6-1
6.3 Alternative Daily Cover 6-1

Section 7 Disease and Vector Control 7-1

Section 8 Explosive Gas Control 8-1

Section 9 Air Criteria 9-1

9.1 State Implementation Plan 9-1
9.2 Open Burning of Waste 9-1
9.3 Fire Protection Equipment 9-1
9.4 Notification of Fire 9-1

Section 10 Access and Safety Requirements 10-1

10.1 Landfill Access and Security 10-1
10.2 Attendant 10-1
10.3 Access Road 10-1

10.4 Dust Control 10-1
10.5 Signs 10-2
10.6 Waste Removal Scavenging Policy 10-2
10.7 Barrel and Drum Disposal 10-2

Section 11 Erosion and Sediment Control Requirements

11.1 Control of Sediment 11-1
11.2 On-Site Erosion Control 11-1
11.3 Vegetative Cover 11-2

Section 12 Drainage Control and Water Protection Requirements

12.1 Surface Water Diverted from Operational Area 12-1
12.2 Surface Water Shall Not Be Impounded Over Waste 12-1
12.3 Waste Shall Not Be Disposed of in Water 12-1
12.4 Leachate Collection and Disposal 12-1
12.5 Leachate Discharge 12-2

Section 13 Liquid Restrictions

13.1 Bulk or Non Containerized Liquid Waste 13-1
13.2 Containerized Liquid Waste 13-1
13.3 Paint Filter Test 13-1

Section 14 Record Keeping Requirements

14.1 Regulatory Requirements 14-1
14.2 Permit File 14-2
14.2.1 Solid Waste Permit 14-2
14.2.2 Sediment and Erosion Control Permit 14-2
14.2.3 NPDES Stormwater Permit 14-2
14.2.4 Leachate Disposal Permit 14-2
14.3 Waste Screening Files 14-2
14.3.1 Inspection Records 14-2
14.3.2 Waste Determination Records 14-2
14.3.3 Training Procedures 14-2
14.4 Weigh Scale Data 14-3
14.5 Gas Monitoring Data 14-2
14.5.1 Routine Landfill Gas Monitoring Form 14-2
14.5.2 Actions if Regulatory Limit is Detected at Methane Monitoring Sites 14-3
14.5.3 Remediation Plan 14-3
14.6 Groundwater Monitoring Files 14-3
14.6.1 Groundwater Monitoring Requirements 14-3
14.6.2 Groundwater Monitoring Systems 14-3
14.6.3 Groundwater Sampling and Analysis Requirements 14-3
14.6.4 Groundwater Detection Monitoring Program 14-3

14.6.5 Groundwater Assessment Monitoring Program 14-3
14.6.6 Assessment of Corrective Action 14-3
14.6.7 Selection of Remedy 14-4
14.6.8 Implementation of the Corrective Action Program 14-4
14.7 Closure Plan Data File 14-4
14.7.1 Notification of Intent to Close a MSWLF Unit 14-4
14.7.2 Certification of Closure 14-4
14.7.3 Notation of Deed 14-4
14.8 Post-Closure File 14-4
14.8.1 Certification of Post-Closure 14-4
14.9 Financial Assurance File 14-4
14.9.1 Closure Cost Estimates 14-4
14.9.2 Post-Closure Cost Estimates 14-5
14.9.3 Corrective Action Cost Estimates 14-5

Section 15 Spreading and Compacting of Waste

15.1 Solid Waste Working Area 15-1
15.2 Solid Waste Compaction 15-1
15.3 Controlling Wind Blown Material 15-1

Section 16 Leachate Management Plan

16.1 Maintenance of the Leachate Collection and Storage System 16-1
16.1.1 System Design 16-1
16.1.2 Storage Pond Maintenance 16-1
16.1.3 Maintenance of the Leachate Collection System 16-1
16.2 Leachate Generation Records 16-2
16.3 Leachate Quality Sampling 16-2
16.4 Leachate Disposal Approval 16-4
16.5 Leachate Management Contingency Plan 16-4

Section 17 Filling Sequence and Operation

17.1 Disposal Area Components 17-1
17.1.1 Disposal Unit 17-1
17.1.2 Cell 17-1
17.1.3 Working Face 17-1
17.1.4 Lift 17-1
17.2 Existing Conditions 17-1
17.2.1 Buffer Areas 17-1
17.3 Progression of Constructing Cells 17-1
17.4 Progression of Operation 17-4
17.4.1 Initial Lift Placement 17-4
17.4.2 Subsequent Lift Placement 17-4
17.5 Leachate and Stormwater Controls 17-5

17.5.1 Initial Lift Stormwater Controls 17-5
17.5.2 Subsequent Lift 17-5
17.5.3 Open Cells 17-6

Appendices

Appendix A Waste Screening Plan
Appendix B Landfill Gas Monitoring Plan

Figures

13-1 Paint Filter Liquids Test 13-3
17-1 Working Face and Lift 17-2
17-2 Subsequent Lift—Upper Stormwater Zone 17-6
17-3 Subsequent Lift—Lower Stormwater Zone 17-7
17-4 Subsequent Lift—Leachate Collection Zone 17-8
17-5 Upper Stormwater and Inactive Zone 17-9

Section 1
Introduction

1.1 Purpose

The purpose of this Operations Plan is to provide the Buncombe County Sanitary Landfill staff with a manual that will serve as a guide for safe and efficient operation of the new Subtitle D disposal facility that is proposed for construction. This Operations Plan has been prepared in accordance with the North Carolina Solid Waste Rule 15A NCAC 13B .1626, Operational Requirements for MSWLF Facilities, and therefore addresses the following issues.

- Waste Acceptance and Disposal Requirements
- Cover Material Requirements
- Disease Vector Control
- Explosive Gases Control
- Air Criteria
- Access and Safety Requirements
- Erosion and Sediment Control
- Drainage Control and Water Protection Requirements
- Liquids Restrictions
- Recordkeeping Requirements
- Spreading and Compacting Requirements
- Leachate Management Plan

1.2 Facility Location

The proposed site (referred to as Site III during the landfill siting process) is located in the north-central part of Buncombe County near the Alexander Community. The French Broad River comprises the southern and western property boundaries of the site with Panther Branch Road (SR 1745) and Blevin Branch constituting the northern extent of the site. The eastern property line runs along the eastern property line of several parcels and is delineated in the southeastern part of the site by Lower Flat Creek Road (SR 1743) and in the northeastern part of the site by Murray DeBruhl Road (SR 1744).

1.3 Facility Description

The proposed site is composed of all or parts of 29 different tracts of land. The site covers approximately 557 acres.

Section 2
Hours of Operation

The Buncombe County Sanitary Landfill is open to receive waste Monday through Friday, 7:30 a.m. to 4:30 p.m. and 7:30 a.m. to 1:00 p.m. on Saturday. A sign is posted at the entrance to the landfill identifying the hours of operation. The Buncombe County Sanitary Landfill is closed on Sundays, New Years Day, Memorial Day, July 4, Labor Day, Thanksgiving, and Christmas.

Section 3
Landfill Operating Staff

3.1 Introduction

The proper operation of the Buncombe County Sanitary Landfill requires a sufficient number of trained personnel working in cooperation with each other. The categories and number of personnel required to provide a safe and efficient operation include:

Position	Number of Personnel
Landfill Operation Supervisor	1
Weigh Master	1
Equipment Operators I, II, III, IV	8
Solid Waste Inspector	1
Mechanic/Equipment Maintenance	1
Laborer Part time	as needed

3.2 Positions and Descriptions

Landfill Operation Supervisor - Solid Waste Association of North America (SWANA) certified landfill operator. Oversees placement, compaction, and covering of solid waste in accordance with state and federal regulations.

Weigh Master - Weighs vehicles transporting solid waste to landfill . Inspects load to make determination for disposal.

Equipment Operator - Operates a variety of heavy equipment to accomplish the following: compact and cover solid waste, excavate soils for cover, maintain roads, drainage ditches, and clears land for new cells.

Solid Waste Inspector - 40 hour OSHA trained as Hazwoper. Responsibility consists of inspecting incoming waste for hazardous waste and other wastes prohibited by County Ordinance and State laws and preventing these materials from being landfilled.

Mechanic\Maintenance Worker - Responsible for equipment maintenance and repair. Hauls soil and assists with daily cover.

Laborer - Responsibilities consist of manual tasks which require some skills or special knowledge acquired through on-the-job experience. Work may range from

performance of a variety of maintenance and repair duties to assisting journeyman level craftsmen.

Section 4
Landfill Operating Equipment

The use of proper equipment is a critical factor in the successful operation of a landfill facility. The equipment must be durable and capable of performing its required task every day of the landfill operation. In the event of primary equipment failure, there must be sufficient backup equipment available to continue proper operation of the landfill. It is the responsibility of the County Operator to provide primary equipment, backup equipment, and equipment maintenance. It is also the County's responsibility to verify the proper use of the landfill equipment.

The landfill facility must be equipped to perform the following four basic functions of landfill operation:

- Refuse handling
- Cover material handling and placement
- Excavating
- Support functions

The following list details the equipment operated at the Buncombe County Sanitary Landfill:

2	Dozers (1 Cat D6 & 1 John Deer 850)
3	Terex Compactors (2-390 & 1-370)
1	Volvo Excavator (210)
1	Volvo 25-yard Articulated Dump Truck (A25)
2	1 Volvo Rubber Tired Loader (L70) and 1 Case (W14-C)
1	International Track Loader (250C)
1	Kabota Farm Tractors (8030F)
1	John Deere Motor Grader (570A)
1	Morbark Tub Grinder (1200)

Based on the available range of handling capacities and the projected waste quantities, the allocation of heavy equipment presented above should be sufficient to process the waste received at the new landfill. The primary purpose of heavy landfill equipment is the spreading and compacting of solid waste, and the hauling and spreading of cover materials. Equipment similarities allow different equipment to perform the same tasks as determined necessary for daily operation. In the event of abnormal conditions requiring additional equipment, equipment may be rented.

Routine preventive maintenance will minimize equipment downtime and increase equipment service life. Preventive maintenance varies with each piece of equipment.

Therefore, the operation and maintenance manual for each should be consulted. Three general maintenance programs will be adopted. They are as follows:

- Establish a routine inspection program
- Perform preventive maintenance according to manufacturers' recommendations
- Keep accurate maintenance records

Section 5
Waste Acceptance and Disposal Requirements

5.1 Waste Definitions

Agricultural Waste - waste material produced from raising of plants and animals, including animal manures, bedding plant stalks, hulls, and vegetative matter.

Asbestos Waste - any waste material that is determined to contain asbestos.

Blood Product - all bulk blood and blood products.

Commercial Solid Waste - all types of solid waste generated by retail stores, offices, restaurants, warehouses, and other non manufacturing activities, excluding residential waste.

Construction/Demolition Waste - solid waste resulting solely from construction, remodeling, repairs or demolition of buildings, structures, or pavement but does not include inert, land-clearing or yard waste.

Hazardous Waste - any solid waste that is defined as hazardous in 15A NCAC 13A 261.3 and that is not excluded from regulation as a hazardous waste from conditionally exempt small quantity generators as defined within 15A NCAC 13A 261.5.

Hot Load - when a waste hauling vehicle is transporting solid waste that is burning or smoldering, it is referred to as a hot load.

Household Waste - any solid waste derived from households including hotels and motels, bunkhouses, ranger stations, crew quarters, campgrounds, picnic grounds, and day-use recreation areas.

Industrial Solid Waste - solid waste generated by manufacturing processes that is not a hazardous waste regulated under Subtitle C of RCRA. Such waste may include, but is not limited to, waste resulting from the following manufacturing processes: electric power generation; fertilizer/agricultural chemicals; food and related products/by-products; inorganic chemicals; iron and steel manufacturing; leather and leather products; nonferrous metals manufacturing/foundries; organic chemicals; plastics and resins manufacturing; pulp and paper industry; rubber and miscellaneous plastic products; stone, glass, clay, and concrete products; textile manufacturing; transportation equipment; and water treatment. This term does not include mining waste or oil and gas waste.

Inert Debris - any solid waste which consists solely of material that is virtually inert, such as brick, concrete, rock, and uncontaminated soil.

Infectious Waste - any solid waste capable of producing an infectious disease. These types of waste include microbiological waste, pathological waste, blood products, and sharps.

Land Clearing Debris - solid waste which is generated solely from land clearing activities such as stumps, trees, limbs, brush, grass, and other naturally occurring vegetative material.

Liquid Hydrocarbons - As defined under Article 21A of Chapter 143 of the North Carolina General Statutes: except that any such oils or other liquid hydrocarbons that meet the criteria for hazardous waste under the Federal Resource Conservation and Recovery Act (P.L. 94-580) as amended.

Liquid Waste - any waste material that is determined to contain free liquid by Method 9095 (Paint Filter Test).

Microbiological Waste - includes cultures and stocks of etiologic agents. The term includes cultures of specimens from medical, pathological, pharmaceutical, research, commercial, and industrial laboratories.

Oils - As defined under Article 21A of Chapter 143 of the North Carolina General Statutes: except that any such oils that meet the criteria for hazardous waste under the Federal Resource Conservation and Recovery Act (P.L. 94-580) as amended.

Pathological Waste - includes: human tissue, organs, body parts, secretions, and excretions, blood, and body fluids that are removed during surgery and autopsies; the carcasses and body parts of all animals that were exposed to pathogens in research, were used in the production of biological or in the in-vitro testing of pharmaceuticals, or that died of known or suspected infectious disease.

Polychlorinated Biphenyls (PCB) - defined as any of several compounds that are produced by replacing hydrogen atoms in biphenyl with chlorine. PCB's were most frequently used as an additive to oil or other liquid in situations where heat is involved. PCB's have been used in paints and lubricants, however the most common application was in electric transformers.

Radioactive Waste - any waste that contains radioactivity as defined by the North Carolina Radiation Protection Act, G.S. 104E-1 through 104E-23. Radioactivity is defined as the property possessed by some elements of spontaneously emitting alpha or beta rays and sometimes gamma rays by the disintegration of the nuclei of atoms.

Sharps - includes needles, syringes with attached needles, capillary tubes, slides and cover slips, and scalpel blades.

Spoiled Food - any food which has been removed from sale by the United States Department of Agriculture, North Carolina Department of Agriculture, Food and Drug Administration, or any other regulatory agency having jurisdiction in determining that food is unfit for consumption.

Treatment or Processing Waste - any waste that is a residual solid from a wastewater treatment or pretreatment facility.

Tires - rubber tires from vehicles.

White Goods - any inoperative and discarded refrigerators, freezers, ranges, washers, dryers, water heaters, and other large domestic commercial appliances.

Yard Trash - solid waste resulting from landscaping and yard maintenance such as brush, grass, tree limbs, and similar vegetative material.

5.2 Acceptable Waste

In accordance with 15A NCAC 13B .1626, a Municipal Solid Waste Landfill Facility (MSWLF) shall only accept those solid wastes which it is permitted to dispose of. In accordance with the North Carolina Solid Waste Management Rules, except where noted, the Buncombe County Sanitary Landfill is permitted to dispose of the following using normal operating procedures:

Agricultural Waste - This waste is acceptable with the exception of animal manures.

Bulk or Non-Containerized Liquid Waste - The waste is acceptable if the waste is a household waste other than septic waste and waste oil or the waste is leachate or gas condensate derived from the MSWLF unit.

Commercial Solid Waste

Containerized Liquid Waste - This waste is acceptable only if the liquid waste is in small containers similar in size to that normally found in household waste, and if the small containers are designed to hold liquids for use other than storage, and the waste is household waste.

Household Waste

Industrial Solid Waste

Animal Carcasses - Dog and cat carcasses will be accepted at the landfill, however, poultry and cattle carcasses will not be accepted. In accordance with .1626.(1)(c), all animal (dog and cat) carcasses delivered to the landfill shall be covered immediately.

5.3 Acceptable Waste Requiring Special Handling

Several components of the acceptable waste stream will require special handling procedures. The waste stream components requiring special handling include, but are not limited to the following:

Asbestos Waste - The County will accept asbestos waste, however, in order to maintain an accurate record of asbestos disposal quantities and locations, landfill staff will identify specific locations in each cell that will contain these wastes.

In accordance with .1626.(1)(d), the waste shall be covered immediately with a soil in a manner that will not cause airborne conditions and must be disposed of separate and apart from other solid wastes at the bottom of the working face or in an area not contiguous with other disposal areas. Separate areas shall be clearly designated so that asbestos is not exposed by future land disturbing activities.

Barrels and Drums - Barrels and drums may be disposed of if they are empty and perforated sufficiently to ensure that no liquid or hazardous waste is contained in them.

Construction/Demolition Waste - This waste is to be disposed in accordance with state and federal regulations in the approved location on site.

Hot Loads - Hot loads arriving at the site should be dumped immediately in the designated primary hot load area located near the working face. The designated area must be located only on areas containing compacted refuse covered by at least 12 inches of cover material. The location of the primary hot load area will change along with the landfill development so as to always be near the working face. Hot loads should be extinguished immediately after being dumped by applying water to the burning refuse and by covering the refuse with soil from the stockpile area. If problems are encountered, the local fire department should be called. Once extinguished, the hot load should be observed until it is certain that the fire is out. The remaining refuse should then be compacted and buried at the working face.

Land Clearing Waste - This waste will be handled at the tub grinder and sold as mulch. This waste may also be composted in the future.

Sharps - Sharps shall be accepted for disposal in the lined portion of the lined landfill only if the sharps are within a puncture proof container or if the sharps have been incinerated.

Spoiled Food - Spoiled food shall be placed at the bottom of the working face and covered immediately.

Tires - Tires will be accepted, placed immediately in an on-site trailer and removed periodically.

White Goods - All CFG will be removed and the remainder will be sold for scrap metal.

Yard Waste - This waste will be processed at the tub grinder and sold as mulch. This waste may also be composted in the future.

5.4 Prohibited Wastes

The following wastes are prohibited from disposal at the Buncombe County Sanitary Landfill.

Barrels and Drums - Barrels and drums shall not be disposed of unless they are empty and perforated sufficiently to ensure that no liquid or hazardous waste is contained in them.

Bulk or Non Containerized Liquid Waste - Bulk or Non-Containerized Liquid Waste may not be placed in the landfill unless the liquid waste is household waste other than septic waste and waste oil.

Containerized Liquid Waste - Containerized Liquid Waste may not be placed in the landfill unless the container is a small container similar in size to that normally found in household waste. In addition, Containerized Liquid Waste may not be placed in the landfill unless the container is a small container that is designed to hold liquids for use other than storage.

Hazardous Waste - Hazardous waste as defined in 15A NCAC 13A 261.3, that is not excluded from regulation as a hazardous waste from conditionally exempt small quantity generators as defined within 15A NCAC 13A 261.5 shall not be accepted at the Buncombe County Sanitary Landfill.

Inert Debris

Infectious Waste

Liquid Waste

Microbiological Waste

Pathological Waste

Polychlorinated Biphenyls (PCB)

Radioactive Waste

Sharps - Sharps not within a puncture proof container or sharps that have not been incinerated shall not be disposed in the Buncombe County Sanitary Landfill.

Treatment or Processing Waste - wastewater treatment sludge will not be accepted at the facility.

5.5 Receiving Prohibited Waste

The Buncombe County Sanitary Landfill shall only accept those solid wastes that it is permitted to receive. A report shall be prepared of any attempted delivery of waste of which the landfill is not permitted to receive, including waste from outside the permitted landfill service area. The report will be forwarded to:

Department of Environment and Natural Resources
Solid Waste Division
P.O. Box 27687
Raleigh, North Carolina 27611 7687

5.6 Waste Screening Program

The North Carolina Solid Waste Management Rules [.1626(1)(f)] require all MSWLFs implement a program at the facility for detecting and preventing the disposal of hazardous and liquid waste. This program must include, at a minimum:

- Random inspection of incoming loads or other comparable procedures
- Records of inspection
- Training of facility personnel to recognize hazardous and liquid waste.
- Development of a contingency plan to properly manage any identified hazardous and liquid waste addressing identification, removal, storage, and final disposition of the waste.

A copy of the waste screening plan for the Buncombe County Sanitary Landfill is included in Appendix A to this Operation Plan.

Section 6
Cover Material Requirements

6.1 Daily Cover

In accordance with 15A NCAC 13B .1626 (2), the operator of MSWLF units must cover disposed solid waste with six inches of earthen material (or alternative cover approved by the solid waste section) at the end of each operating day, or at more frequent intervals if necessary, to control disease vectors, fires, odors, blowing litter, and scavenging. The daily cover must:

- be capable of covering solid waste after it is placed without change in its properties and without regard to weather;
- be capable of allowing loaded vehicles to successfully maneuver over it after placement;
- be noncombustible; and,
- not include rock fragments that are greater than six inches in diameter.

6.2 Intermediate Cover

In accordance with 15A NCAC 13B .1626 (2), the owner or operator of all MSWLF units must place 12-inches of intermediate cover on all areas which will not have additional waste placed on them for 12 months or more, but where final termination of disposal operations has not occurred. The composition standards of intermediate cover shall be the same as for daily cover in addition to being capable of supporting the germination and propagation of vegetative cover.

6.3 Alternative Cover

Buncombe County does not intend to utilize an alternative daily cover at this time. If, in the future, the County chooses to utilize an alternative daily cover, an application will be submitted for review by the Solid Waste Section.

Section 7
Disease and Vector Control

In accordance with 15A NCAC 13B .1626 (3), owners or operators of all MSWLF units must prevent or control on-site population of disease vectors using techniques appropriate for the protection of human health and the environment. Disease vectors are defined as any rodent, flies, mosquitoes, or other animals, including insects, capable of transmitting disease to humans.

Effective vector control measures shall be applied when necessary. Control of vectors will be maintained by application of well-compacted cover material over the compacted solid waste. This will protect against migration of vectors into and from the landfill. Stagnant ponding water should be prevented to control mosquito breeding. Filling in low spots should be performed regularly, and if necessary, County mosquito control or a licensed exterminator shall be employed to control vectors.

Section 8
Explosive Gas Control

In accordance with 15A NCAC 13B .1626 (4) ,the owners or operators of all MSWLF units must ensure that:

- the concentration of methane gas generated by the facility shall not exceed 25% of the lower explosive limit (LEL) for methane in facility structures (excluding gas control or recovery system components); and,

- the concentration of methane gas does not exceed the lower explosive limit for methane at the facility property boundary.

Owners or operators of all MSWLF units must implement a routine methane monitoring program to ensure that the above standards are met. A Landfill Gas Monitoring Plan prepared in accordance with this rule is located in Appendix B of this Operations Plan.

Section 9
Air Criteria

9.1 State Implementation Plan

In accordance with 15A NCAC 13B .1626 (5), the owner or operator of all MSWLFs must ensure that units do not violate any applicable requirements developed under a State Implementation Plan (SIP) approved or promulgated by the U.S. EPA Administrator pursuant to Section 110 of the Clean Air Act, as amended. At this time, the SIP has not been approved or promulgated by the U.S. EPA Administrator pursuant to Section 110 of the Clean Air Act, as amended in North Carolina. An air quality monitoring plan will be developed when the SIP becomes state or federal law.

9.2 Open Burning of Waste

In accordance with 15A NCAC 13B .1626 (5) (b), open burning of solid waste, except for the infrequent burning of land clearing debris generated on site or debris from emergency clean-up operations, is prohibited at all MSWLF units. Any such infrequent burning must be approved by the Division of Solid Waste Management.

9.3 Fire Protection Equipment

In accordance with 15A NCAC 13B .1626 (5) (c), equipment shall be provided to control accidental fires or arrangements shall be made with the local fire protection agency to immediately provide fire fighting services when needed. Fires that break out close to the surface of the fill area should be dug out and smothered with cover material. Deep fires should be smothered out by placing moist soil on the surface and by constructing soil barriers around the fire. Where the smothering technique fails, the burning material must be excavated and smothered or quenched with water once the burning material is brought to the surface. Water is usually not effective unless it can be directly applied to the burning material.

9.4 Notification of Fire

In accordance with 15A NCAC 13B .1626 (5) (d), fires that occur at the MSWLF require verbal notice to the Division of Solid Waste Management within 24 hours and written notification shall be submitted within 15 days. Verbal and written notification shall be submitted to:

Department of Environment and Natural Resources
Solid Waste Division
P.O. Box 27687
Raleigh, North Carolina 27611 7687
(919) 733-0692

Section 10
Access and Safety Requirements

10.1 Landfill Access and Security

In accordance with 15A NCAC 13B .1626 (6) (a), the Buncombe County Sanitary Landfill must be adequately secured by means of gates, chains, berms, fences and other security measures approved by the Division of Solid Waste Management to prevent unauthorized entry.

All vehicles disposing of waste at the facility will enter and leave through the access control gate. All waste entering the landfill must be weighed in at the scale where a full-time Scale Operator verifies compliance with operation requirements. Unauthorized vehicle access to the site is prevented around the remaining portion of the landfill property by woods, wetlands, and storm water ditches.

10.2 Attendant

In accordance with 15A NCAC 13B .1626 (6) (b), an attendant shall be on duty at the site at all times while the facility is open for public use to ensure compliance with operational requirements.

A full-time Scale Operator will be located in the scale house during operating hours. The Scale Operator will verify compliance with operation requirements. In addition, a Facility Supervisor will be present on-site at all times during operation.

10.3 Access Road

In accordance with 15A NCAC 13B .1626 (6) (c), the access road to the site shall be of all weather construction and maintained in good condition. Potholes, ruts, and debris on the roads will receive immediate attention in order to avoid damage to vehicles. Access roads will be regraded as necessary to maintain positive slope for adequate drainage.

10.4 Dust Control

In accordance with 15A NCAC 13B .1626 (6) (d), dust control measures shall be implemented when necessary. Minimum dust control will include a water truck for wetting of dusty roads. Petroleum products shall not be used for dust control.

10.5 Signs

In accordance with 15A NCAC 13B .1626 (6) (e), a sign providing information on disposal procedures, operation hours, tipping fee, permit number, and other pertinent information shall be clearly posted at the site entrance.

In accordance with 15A NCAC 13B .1626 (6) (f), signs shall be clearly posted stating that no hazardous or liquid waste can be received.

In accordance with 15A NCAC 13B .1626 (6) (g), traffic signs or markers shall be provided as necessary to promote an orderly traffic pattern to and from the discharge area and to maintain efficient operating conditions.

10.6 Waste Removal Scavenging Policy

In accordance with 15A NCAC 13B .1626 (6) (h), the removal of solid waste from the landfill will be prohibited unless the County approves and the removal is not on the working face.

10.7 Barrel and Drum Disposal

In accordance with 15A NCAC 13B .1626 (6) (i), barrels and drums shall not be disposed of unless they are empty and perforated sufficiently to ensure that no liquid or hazardous waste is contained therein.

Section 12
Drainage Control and Water Protection Requirements

12.1 Surface Water Diverted From Operational Area

In accordance with 15A NCAC 13B .1626 (8) (a), surface water shall be diverted from the operational area. Excessive surface water at the working face creates difficulties for manuevering equipment and prevents the operator from achieving maximum compaction of the waste. To divert surface runoff away from the working face, temporary diversion berms shall be installed on the current lift, up-gradient from the working face and in other locations as dictated by the direction of grade. The area between the temporary berm and the working face should be limited to one acre to prevent excessive ponding. The soil cover in the areas beyond the diversion berms shall be uniformly graded and compacted to prevent the formation of erosion channels. In the event that channels do form, the cover shall be promptly repaired. During the formation of the initial lift of each disposal unit additional measures shall be employed to divert surface water. For portions of the disposal unit that have not yet received waste, surface water can be better diverted by temporarily plugging the leachate collection line at the location where the temporary berm intersects the line. Since the surface water that will pond at the plugged location is uncontaminated, it can pumped from the disposal unit to the storm water management system. Temporary diversion berms and plugs that are no longer needed shall be promptly removed and the area regraded to promote uniform runoff of surface water.

12.2 Surface Water Shall Not Be Impounded Over Waste

In accordance with 15A NCAC 13B .1626 (8) (b), surface water shall not be impounded over or in waste. Completed areas shall be adequately sloped at a minimum of 4% to allow surface water runoff in a controlled manner.

12.3 Waste Shall Not Be Disposed Of In Water

In accordance with 15A NCAC 13B .1626 (8) (c), solid waste shall not be disposed of in water. The minimum four foot separation from the seasonal high groundwater table to the bottom of the liner system shall be maintained at all times.

12.4 Leachate Collection and Disposal

In accordance with 15A NCAC 13B .1626 (8) (d), leachate shall be contained on-site or properly treated prior to discharge. An NPDES permit is required for surface discharge prior to discharge of leachate to surface waters.

Leachate generated will be collected and disposed in accordance with the leachate management plan provided in Section 16.

12.5 Leachate Discharge

In accordance with 15A NCAC 13B .1626 (8) (e) (i), MSWLF units shall not cause a discharge of pollutants into waters of the United States, including wetlands, that violate any requirements of the Clean Water Act, including, but not limited to, the National Pollutant Discharge Elimination System (NPDES) requirements, pursuant to Section 402.

In accordance with 15A NCAC 13B .1626 (8) (e) (ii), MSWLF units shall not cause a discharge of a nonpoint source of pollution to waters of the United States, including wetlands, that violates any requirement of an area-wide or State wide water quality management plan that has been approved under Section 208 or 319 of the Clean Water Act, as amended.

Section 13
Liquid Restrictions

Liquid waste is defined as any waste material that is determined to contain "free liquid" as defined by Method 9095 (Paint Filter Liquids Test). A description of how to conduct a paint filter test is included in Section 13.3.

13.1 Bulk or Non-Containerized Liquid Waste

In accordance with 15A NCAC 13B .1626 (9) (a), bulk or non-containerized liquid waste may not be placed in a MSWLF unit unless:

- The waste is liquid household waste other than septic waste and waste oil.
- The waste is leachate or gas condensate from gas recovery derived from the MSWLF unit, whether it is a new or existing MSWLF unit or lateral expansion, is designed with a composite liner and leachate collection system per North Carolina Solid Waste Management Rules (Rule .162A).

13.2 Containerized Liquid Waste

In accordance with 15A NCAC 13B .1626 (9) (b), containers holding liquid wastes may not be placed in MSWLF units unless:

- The container is small and similar in size to that normally found in household waste containing liquid waste,
- The container is designed to hold liquids for use other than storage; and,
- The waste is household waste.

13.3 Paint Filter Test

According to 40 CFR 264.314 and 265.314, the placement of any liquid which is not a hazardous waste in a landfill is prohibited unless the owner or operator of such landfill demonstrates to the Regional Administrator, or the Regional Administrator determines that:

- The only reasonably available alternative to the placement in such landfill is placement in a landfill or unlined surface impoundment, whether or not permitted or operating under interim status,which contains, or may reasonably be anticipated to contain, hazardous waste.
- Placement in such landfill will not present a risk of contamination of any underground source of drinking water.

To demonstrate the absence or presence of free liquids in either a containerized or bulk waste, the following test must be used: Method 9095 (Paint Filter Test). This method is used to determine compliance with 40 CFR 264.314 and 265.314.

To conduct the Paint Filter Tests, a pre-determined amount of material is placed in a paint filter. If any portion of the material passes through and drops from the filter within the 5-minute test period, the material is deemed to contain free liquids. The test apparatus and materials are presented in Figure 13-1. The paint filter is required to be a conical paint filter mesh number 60 (fine meshed size). If the paint filter, with the waste, cannot sustain its weight on the ring stand, then a fluted glass funnel or glass funnel with a mouth large enough to allow at least 1 inch. of the filter mesh to protrude should be used to support the filter. The funnel is to be fluted or have a large open mouth in order to support the paint filter yet not interfere with the movement, to the graduated cylinder, of the liquid that passes through the filter mesh.

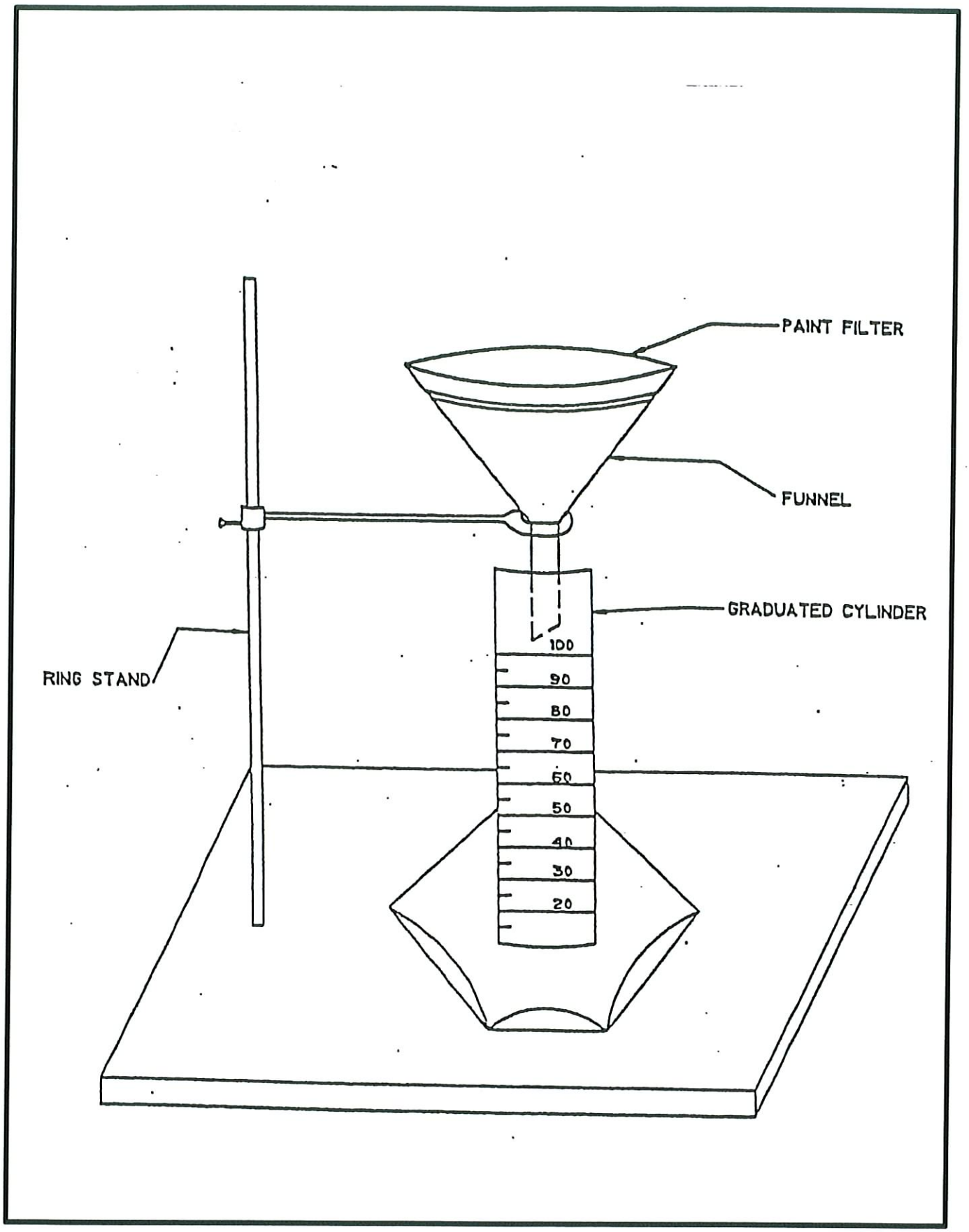

CDM

consulting • engineering • construction • operations

Figure No. 13-1
PAINT FILTER LIQUIDS TEST

Section 14
Record Keeping Requirements

14.1 Regulatory Requirements

In accordance with 15A NCAC 13B .1626 (10), the owner or operator of a MSWLF unit must record and retain at the facility, or an alternative location near the facility approved by the Division, in an operating record, the following information as it becomes available:

- Inspection records, waste determination records, and training procedures
- Amount by weight of solid waste received at the facility to include source of generation and the amount by weight of solid waste disposed.
- Gas monitoring results and any remediation plans
- •Any demonstration, certification, findings, monitoring, testing, or analytical data required for groundwater monitoring requirements, groundwater monitoring systems, groundwater sampling and analysis requirements, detection monitoring, assessment monitoring, assessment of corrective measures, selection of remedy, and implementation of corrective action program
- •Any monitoring, testing, or analytical data required for Closure and Post-Closure Plans
- •Any cost estimates and financial assurance documentation required by financial assurance requirements
- •All information contained in the operating record must be furnished upon request to the Division or be made available at all reasonable times for inspection by the Division
- •The owner or operator must maintain a copy of the operation plan required by Rule .1625 at the facility

In addition, it is recommended that the owner or operator of a MSWLF unit should record and retain at the facility, or an alternative location near the facility approved by the Division, in an operating record the following information as it becomes available:

- A Permit File including the Solid Waste Permit, Erosion Control Permit, NPDES Stormwater Permit, and Leachate Disposal Permit
- CQA Data and Test Results from construction of the landfill

- •NPDES Stormwater Monitoring Data including Visual Inspection Records and Sampling Results Data

14.2 Permit File

A file containing all appropriate permits should be kept on site. The file shall include the following permits at the minimum:

14.2.1 Solid Waste Permit

A copy of all applicable solid waste permits shall be kept in this file.

14.2.2 Sediment and Erosion Control Permit

A copy of all applicable Sediment and Erosion Control permits shall be kept in this file.

14.2.3 NPDES Stormwater Permit

A copy of applicable NPDES stormwater permits shall be kept in this file.

14.2.4 Leachate Disposal Permit

A copy of applicable leachate disposal permits from the Division of Environmental Management and the receiving municipality shall be kept in this file.

14.3 Waste Screening Files

14.3.1 Inspection Records

This file should include completed copies of the Waste Screening Program Record of Inspection form. A copy of this form is included in Appendix A of this Operations Plan.

14.3.2 Waste Determination Records

This file contains a copy of all the waste determination forms submitted to the owner or operator.

14.3.3 Training Procedures

This file should include certificates of successful training in identifying liquid and hazardous waste for all landfill personnel.

14.4 Weigh Scale Data

This file should contain the amount by weight of solid waste received at the facility including the source of generation. The weigh scale data should be filed in a manner such that one month of scale data shall be filed for convenient reference.

14.5 Gas Monitoring Data

14.5.1 Routine Landfill Gas Monitoring Form

This file should contain completed copies of all Landfill Gas Monitoring forms. A copy of the Landfill Gas Monitoring form is included in Appendix B of this Operations Plan. A form should be prepared for each landfill gas sampling event. The landfill gas sampling events should occur at least quarterly (every three months) in accordance with the Landfill Gas Monitoring Plan in Appendix B.

14.5.2 Actions If Regulatory Limit is Detected at Methane Monitoring Sites

If methane levels exceed the regulatory limits, this file should contain a description of the steps taken to protect human health.

14.5.3 Remediation Plan

If methane levels exceed the regulatory limits, this file should contain a remediation plan for methane gas releases.

14.6 Groundwater Monitoring Files

14.6.1 Groundwater Monitoring Requirements

This file should contain the approved Water Quality Monitoring Plan.

14.6.2 Groundwater Monitoring Systems

This file should contain a well completion record for all monitoring wells on the site.

14.6.3 Groundwater Sampling and Analysis Requirements

This file should contain the Sampling and Analysis Plan approved by the Solid Waste Section.

14.6.4 Groundwater Detection Monitoring Program

This file should contain a copy of the Appendix I groundwater and surface water detection monitoring analysis reports.

14.6.5 Groundwater Assessment Monitoring Program

This file should contain a copy of the Appendix II groundwater and surface water assessment monitoring analysis reports, if required.

14.6.6 Assessment of Corrective Action

This file should contain copies of reports outlining all means considered for corrective action, if ever required.

14.6.7 Selection of Remedy

This file should contain copies of reports outlining means approved by the Solid Waste Section for corrective action.

14.6.8 Implementation of the Corrective Action Program

This file should contain a completion report that documents the corrective action taken and its compliance with Rule .1637(e).

14.7 Closure Plan Data File

14.7.1 Notification of Intent to Close a MSWLF Unit

Prior to beginning closure of a MSWLF Unit, a notice of intent to close the MSWLF Unit should be sent to the North Carolina Solid Waste Section. A copy of that notification shall be filed in this section of the Operations Record.

14.7.2 Certification of Closure

Upon closure of each MSWLF Unit, a certification signed by a Professional Engineer verifying that closure has been completed in accordance with the closure plan shall be sent to the North Carolina Solid Waste Section. A copy of the certification shall be filed in this section of the Operations Record.

14.7.3 Notation of Deed

Following the closure of each MSWLF Unit, the County shall record a notation to the deed of the facility property, or some other instrument that is normally examined during title search. The notation on the deed shall, in perpetuity, notify any potential purchaser of the property that the land has been used as a landfill facility and its use is restricted under the closure plan approved by the section. A copy of the Notation of Deed should be filed in this section of the Operations Record.

14.8 Post-Closure File

14.8.1 Certification of Post-Closure

Upon completion of the 30 year post-closure care period for each MSWLF Unit, a certification signed by a Professional Engineer verifying that post-closure has been completed in accordance with the post-closure plan shall be sent to the Solid Waste Section. A copy of the certification of Post-Closure should be filed in this section of the Operations Record.

14.9 Financial Assurance File

14.9.1 Closure Cost Estimates

In accordance with 15A NCAC 13B .1628 (b) (1), Buncombe County must have a detailed cost estimate in current dollars, of the cost of hiring a third party to close the largest area of all MSWLF units at any time during the active life in accordance with the closure plan. A copy of the closure cost estimate must be placed in this file.

14.9.2 Post-Closure Cost Estimates

In accordance with 15A NCAC 13B .1628 (c) (1) , Buncombe County must have a detailed written estimate, in current dollars, of the cost of hiring a third party to conduct post-closure care for the MSWLF unit in compliance with the post-closure plan. The post-closure detailed written cost estimate must be included in this file.

14.9.3 Corrective Action Cost Estimates

In accordance with 15A NCAC 13B .1628 (d) (1) , if Buncombe County is ever required to undertake corrective action it must have a detailed written estimate, in current dollars, of the cost of hiring a third party to conduct corrective action. If corrective action is required to be undertaken, the corrective action cost estimate must be included in this file.

Section 15
Spreading and Compacting of Waste

15.1 Solid Waste Working Area

In accordance with 15A NCAC 13B 1626 (11) (a), operators shall restrict solid waste within MSWLF units to the smallest area feasible. The working face is defined as where waste is unloaded, inspected, spread, compacted, and ultimately covered with cover material. The working face shall be wide enough to prevent a backlog of vehicles waiting to unload and to allow adequate working space for landfill equipment. At a maximum, the width of the working face shall not exceed 100 feet.

15.2 Solid Waste Compaction

In accordance with 15A NCAC 13B 1626 (11) (b), solid waste shall be compacted as densely as practical into cells. After solid waste is discharged from vehicles, it shall be inspected for unacceptable items and subsequently spread on the working face not steeper than four feet horizontal to one foot vertical in layers not to exceed 2 feet in thickness. All areas of each layer shall be compacted by at least four passes of a compactor in order to achieve a minimum waste density of approximately 1000 lbs. per cubic yard.

15.3 Controlling Wind Blown Material

In accordance with 15A NCAC 13B 1626 (11) (c), appropriate methods such as fencing and diking shall be provided as needed within the landfill area to confine solid waste subject to be blown by the wind.

Portable litter screens shall be placed downwind of the working face as needed. The screens shall be kept as close to the working area as possible without unduly interfering with landfill operations. The screens shall be moved promptly when required by change in wind direction or progress of the fill. Additional screens or alternative measures may be required to prevent blowing litter from escaping the working area.

At the conclusion of each day of operation, all windblown material at the landfill site shall be collected and returned to the working face.

Section 16
Leachate Management Plan

16.1 Maintenance of the Leachate Collection and Storage System

16.1.1 System Design

The leachate collection pipes within the proposed municipal solid waste landfill (MSWLF) unit will convey collected leachate by gravity to a sump area, where a submersible pump will pump leachate to a pump station located outside the cell. Cleanouts are located at the upstream ends of the collection pipes, and at the sump area low point. From the pump stations, leachate will be pumped to the leachate storage pond adjacent to the southwest side of the MSWLF unit. Another pumping station at the pond will pump leachate through a flow metering vault, to a truck loading station, where tank trucks will be filled to haul leachate to the Metropolitan Sewerage District (MSD) wastewater treatment plant. The pond will serve as an equalization basin to absorb peak flows coming from the pump stations. Depending upon the leachate quality, and the surcharge rates for high nutrient concentrations, pretreatment facilities may be required at the leachate pond prior to discharge to the sewer system. A pretreatment plant will be added if the regulated nutrients exceed surcharge levels, as monitored by periodic sampling results. All leachate removed from the holding pond will be flow monitored and recorded using a flow meter.

Each leachate pump station is provided with numerical identification at the leachate pump control panel. One pump control panel is provided for each submersible leachate pump station and is provided in a common enclosure. The control panel is programmed to respond to the liquid level sensor to automatically start and stop pumps in response to changes in liquid levels and to allow manual control of the sump when needed. Each control panel is equipped with visual and audible high level alarms programmed to activate when the leachate levels exceed one foot of head.

16.1.2 Storage Pond Inspection and Maintenance

Inspection of the storage pond will be made on an annual basis by County staff. Any stored leachate and sediment in the pond must be removed so that the pond bottom is visible. The inspector should verify that flows from the pump stations are not impeded, by inspecting flows at the junction manhole. Once flow is verified, the pump stations that transfer leachate to the pond should all be turned off. Then, the inspector should perform a thorough walkover of the pond bottom, surveying the protective layer for any signs of damage, such as cracks, tears, gouges, uplift, or soft spots. Observations should be recorded in the operating record and photographs should be taken of the areas of concern and also placed in the operating record.

If damage or potential problems are discovered, they should be reported to the facility supervisor so that repairs may be made as soon as possible. All repair

activities should be recorded in the operating record as well. The pond should be put back on-line as soon as possible, to minimize leachate storage time within the pump stations and cells.

16.1.3 Maintenance of the Leachate Collection System

The perforated leachate collection piping will be pressure cleaned and flushed annually to remove any accumulation of debris, sediment, or organic growth, which will be achieved by inserting a self-propelled, high pressure jetting system into the collection pipes by way of the clean-out ports. Remote camera inspections of the leachate collection lines shall also occur, following initial cleaning, and at least once every five years thereafter and following the clearing blockages.

The monitoring vault should also be visually inspected during routine monitoring and each valve shall be manually operated to check for proper operation and control. The control panels shall be fully inspected at the same time, to ensure proper alarm operations, reset functions, and normal operations performance. Any components not properly functioning shall be promptly repaired or replaced.

16.2 Leachate Monitoring and Generation Records

16.2.1 Quantitative Monitoring

The leachate effluent line from the storage pond is designed with a flow meter to measure the amount of leachate being discharged from the landfill. In addition, each sump pump station is designed with a flow meter to measure the leachate discharge from each sump. The operator shall read and register the leachate flows on a weekly basis at the leachate effluent line and at each of the sump pump stations.

The information to be collected shall include the date, time, leachate quantity (in gallons), pump run time, leachate levels, and the name of the person taking measurements. Weekly measurements recorded at each sump pump station will be used to detect potential pump malfunction. While taking weekly sump readings the operator shall also record the leachate level within the leachate pond. Should the leachate pond minimum freeboard level of 12 inches be exceeded the North Carolina Department of Environment and Natural Resources, Division of Waste Management, Solid Waste Section (SWS) will be notified immediately.

16.2.2 Qualitative Monitoring

In addition to the above quantitative monitoring and recording requirements, the operator shall inspect each sump control panel on a weekly basis to ensure the proper operation of the audio and visual alarms. The operator shall also, on a weekly basis, visually observe the landfill sideslopes for leachate breakouts and the perimeter berm for staining, which would indicate a potential pipe failure. All exposed leachate piping shall also be monitored for leaks.

In addition to weekly observations, the operator shall, after substantial rainfall events equal to or exceeding ½ inch, observe the landfill sideslopes for leachate breakouts, leaks or pipe failures.

16.2.3 Record Keeping

All records shall be maintained at the landfill by the operator and made available to Solid Waste Section personnel for inspection when requested. A sample form to be used for recording leachate flows at the effluent is attached as Table 16-1. A sample form to be used for recording leachate flows at each sump pump station is attached as Table 16-2.

16.3 Leachate Quality Sampling

The County shall obtain a leachate sample as required by the receiving municipality in their pre-treatment permit. The sample shall be packaged in a watertight container, placed in an insulating storage box, and packed with ice. The package shall be express delivered to a certified laboratory to perform the required analytical tests. The results of the lab analyses shall be kept in the landfill operating records and made available to the receiving wastewater treatment plant staff as well as State regulatory personnel for their inspection. The County landfill operating staff will sample on a quarterly basis, which may become the required sampling frequency for the County for all parameters, after a period of time during which the leachate quality stabilizes. The results of any additional lab analyses shall also be kept in the landfill operating records.

Composite or grab samples shall be obtained at the leachate storage pond, and at any pretreatment facilities, if applicable.

Buncombe County
Solid Waste Landfill
Leachate Management

Date:_____ **Weather:**_____

Time:_____ **Rainfall:**_____

	Cell 1	Cell 2	Cell 3	Cell 4	Cell 5	Cell 6
Level (inches)	_____	_____	_____	_____	_____	_____
Total Pumped	_____	_____	_____	_____	_____	_____
GPM	_____	_____	_____	_____	_____	_____
Total Hours	_____	_____	_____	_____	_____	_____
Alarm Sound	_____	_____	_____	_____	_____	_____
Alarm Light	_____	_____	_____	_____	_____	_____

PUMP OPERATIONS SUMMARY

Cell 1 Pumped _____ gal Ran _____ hrs _____ GPH _____ GPM

Cell 2 Pumped _____ gal Ran _____ hrs _____ GPH _____ GPM

Cell 3 Pumped _____ gal Ran _____ hrs _____ GPH _____ GPM

Cell 4 Pumped _____ gal Ran _____ hrs _____ GPH _____ GPM

Cell 5 Pumped _____ gal Ran _____ hrs _____ GPH _____ GPM

Cell 6 Pumped _____ gal Ran _____ hrs _____ GPH _____ GPM

Condensate Compressor hours _____ ran _____ hours

Leachate system visual inspection _____ After 0.5" rain_____

Leachate Pond level_____ inches

16.4 Leachate Disposal Approval

Leachate from the landfill will be pumped from the storage pond to the truck loading station, which will fill trucks used to haul the leachate to the MSD sanitary sewer system for final disposal. An approval letter from MSD stating that they will accept the landfill leachate will be included in the operating records. Any pretreatment requirements will be included in the Pretreatment Permit issued by MSD prior to landfill operations.

16.5 Leachate Management Contingency Plan

16.5.1 Leachate Sump Pump Station

Should a pump station not appear to be functioning properly, based upon weekly monitoring records, the pump will be removed and troubleshooted in accordance with manufacturer recommendations. If troubleshooting techniques do not provide a prompt resolution, one of the spare pumps located on-site will be installed in its place and necessary repairs will be made.

Should power be lost at the site the pumping station control panels are equipped with receptacles for a portable emergency generator, to operate the pumping stations until power is restored. A portable emergency generator will be available within 12 hours and used in the event of a power outage.

16.5.2 Leachate Storage

During periods when components of the leachate pond pump station are inoperative or down for maintenance, or when storm flows are extremely high, excessive leachate will be dealt with using either of two contingency plans.

The storage capacity of the leachate holding pond is approximately 1,000,000 gallons, when completely full to within 12 inches of the top of the pond liner. This will provide up to 17 days of storage during peak leachate flow periods, and about 69 days storage for average annual daily flows. If surface evaporation rates are considered, even longer storage periods can be achieved. This volume is also adequate to capture the leachate from the peak rainfall event from the five years of rainfall data used in the HELP model leachate projections (assuming several acres of open cell area with only the first solid waste lift installed) and still have reserve capacity for additional daily flows. Therefore, considerable storage capability is provided by the leachate pond for periods of unusually high precipitation or unusual operating conditions.

Should a period of substantial rainfall persist, and the leachate pond approach full stage, the pumping stations can be turned off. The leachate would be temporarily stored in the disposal cells until the level in the pond is adequately reduced. The cells would be monitored daily to ensure that overflow does not occur. If the

storage pond encroaches to within 6 inches of the ponds 12-inch freeboard (18 inches from the top of the pond liner), leachate hauling will be increased to a frequency adequate to deplete the leachate volume in the storage pond to an acceptable level.

Should power be lost at the site the pumping station control panel at the leachate pond is equipped with receptacles for a portable emergency generator, to operate the pumps long enough to control leachate flow volumes. A portable emergency generator will be available within twelve hours of a power outage.

16.5.3 Leachate Breakout

In the event of a breakout, leak or pipe failure, the County will immediately notify SWS and identify the areas contaminated by the breakout/leak/pipe failure, if any. Should leachate collect in a sediment pond or other surface waters, the County will analyze the contaminated water for the Appendix 1 list of constituents and BOD_5, COD, phosphate, nitrate and sulfate. The sample results will be forwarded to SWS and used to determine whether the pond or surface waters are impacted by the release.

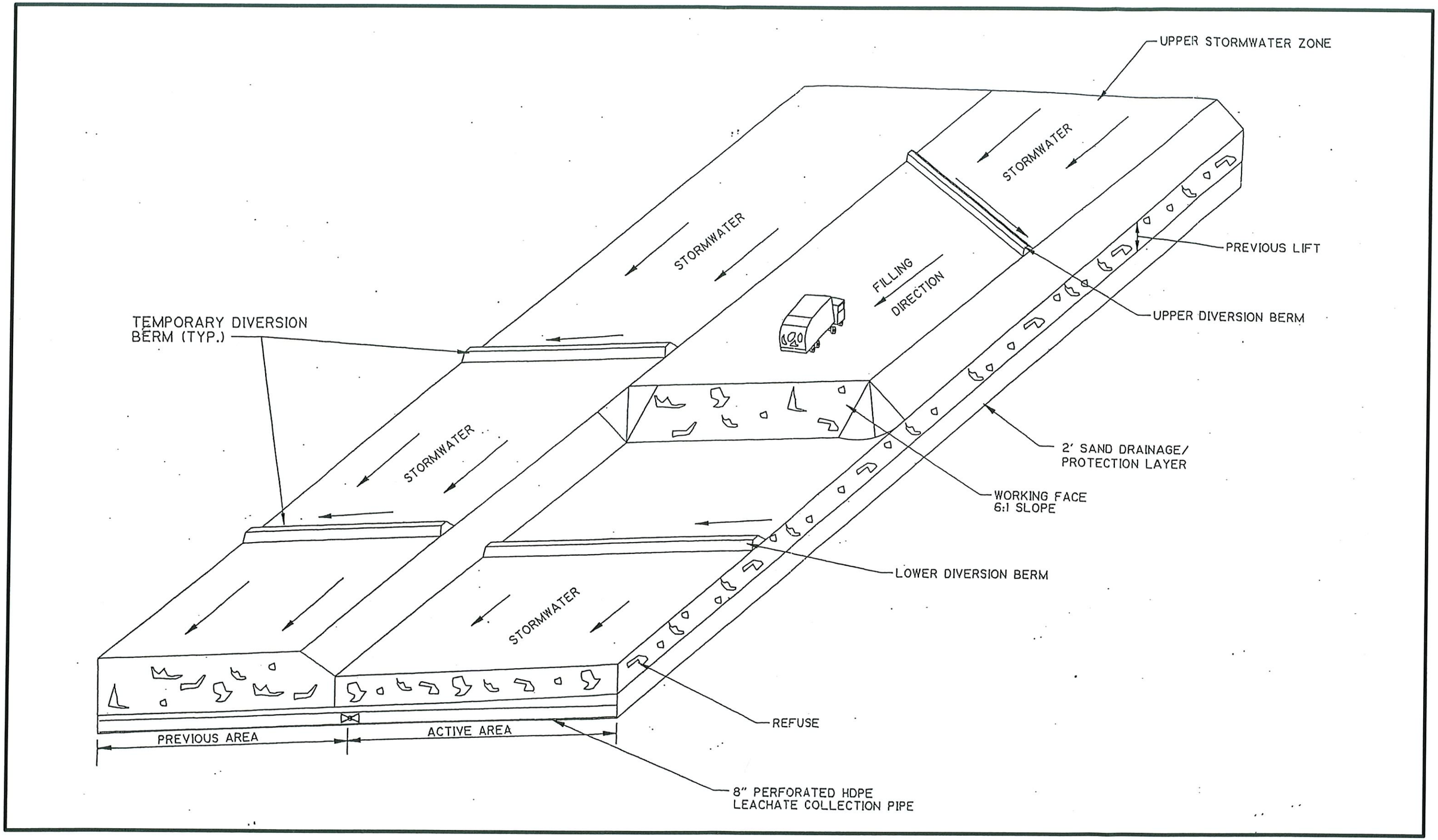

CDM

consulting • engineering • construction • operations

Figure No. 17-1
WORKING FACE AND LIFT

17.4 Progression of Operation

The initial lifts of each cell will be constructed directly on the drainage layer. Subsequent lifts are constructed directly over the previous lift until the area is filled to its maximum height.

The sequence of filling must be thought out before the disposal operation begins. Operators will work more efficiently and future problems can be avoided using a predetermined filling scheme. A carefully planned filling sequence will:

- improve stormwater control,
- minimize leachate production,
- maximize capacity,
- minimize cover material requirements,
- protect the base liner system, and
- maintain good access to the working face.

17.4.1 Initial Lift Placement

The initial lift construction is to proceed down gradient from the high end of the cell toward the low end of the cell. In order to prevent damage to the base liner system, no compacting or spreading equipment will be permitted to operate directly on the drainage layer. A 3-foot minimum protective layer of select refuse (no large items that may penetrate the drainage layer and damage the liner) will be placed over the drainage layer prior to operation of compaction equipment. Refuse will be unloaded from the hauling vehicle and a bulldozer will be used as the primary spreading and compacting machine until the first 3 foot fill height over the sand drainage layer is completed. No bulky waste will be landfilled until 5 feet of waste has been established on the drainage layer. Depending on the rate that the working face is advancing, the operator must make a decision regarding the placement of intermediate cover. If the working face is advancing slowly and the lift will be exposed to precipitation for a long period of time, the operator should place intermediate cover so that stormwater is diverted and leachate generation is minimized. For rapidly advancing working faces in which the subsequent lift will begin in a short period, the operator may elect to forgo placing intermediate cover. However, it must be noted that according to the Rule .1626 (2)(b), intermediate cover is required for areas which will not have waste placed on them for 12 months or longer.

17.4.2 Subsequent Lift Placement

Operating the second lift requires the cell construction to also begin at the high end of the cell and proceed toward the low end of the cell. If intermediate cover is present

on the previous lift, the operator should remove as much of the cover material as possible without disturbing the inplace solid waste. Removing the intermediate cover saves disposal capacity, prevents blockage of vertical migration of leachate, and allows reuse of the reclaimed soil. Solid waste will be spread into uniform layers and compacted to its smallest practical volume. Uniform layers shall not exceed 2 feet in thickness. Compaction shall consist of three to four passes with a compactor.

17.5 Leachate and Stormwater Controls

It is important for the landfill operator to understand the difference between leachate and stormwater in order to minimize the production of leachate for all phases of the landfill project.

As defined by the Solid Waste Rules, leachate means any liquid, including any suspended components in liquid, that has percolated through or drained from solid waste.

Stormwater is defined as rain or other forms of precipitation which does not contact solid waste. An example of stormwater is rain water which runs off of the surface of the landfill after 6" or more of cover material has been placed over solid waste.

Since leachate has to be collected and treated at a cost, the operator can reduce operations cost by minimizing the amount of stormwater that comes in contact with waste or existing leachate. In order to prevent large quantities of stormwater from being collected and ultimately being treated as leachate, the operator shall construct diversion berms to divert stormwater away from the active working face wherever possible.

17.5.1 Initial Lift Stormwater Controls

Potentially the maximum leachate flows can occur during the development of the initial lift in each cell, therefore stormwater flows must be handled so as to minimize leachate production for the initial lift. Cell grading permits storage of runoff from a 25-year, 24-hour storm event to be completely contained within the aereal extents of the sump in each cell. No stormwater segregation will be required because leachate pumps are designed to convey stormwater flows from the entire cell. During initial lift waste placement, operators will work from the high end to the low end, thus allowing the sump area to remain open until final initial lift placement. The leachate collection and pumping system will collect and convey the leachate to the leachate pond.

17.5.2 Subsequent Lift

During the development of the subsequent lifts in each cell, at least two berms should be used to subdivide the cell into three separate zones in order to minimize leachate generation. As before, the berms will be used to separate stormwater that has come into contact with uncovered waste (leachate) from clean stormwater. The

stormwater berms should be constructed across the entire cell and up-gradient and down-gradient of the working face as shown on Figure 17-1.

The area between the highest end of the cell and the upper diversion berm is defined as the "upper stormwater zone" (see Figure 7-2). Precipitation that falls into the upper stormwater zone is defined as stormwater. The stormwater collected in the upper stormwater zone will be diverted into an adjacent unfilled cell, a cell with 6" of cover, or to a drainage ditch along the perimeter access road.

The area between the lower diversion berm and the lowest end of the cell is defined as the "lower stormwater zone" (see Figure 17-3). Precipitation that falls on the lower stormwater zone is also defined as stormwater. The stormwater collected in the lower stormwater zone will sheet flow over the daily cover of the current lift until diverted into an adjacent unfilled cell, a cell with 6" of cover, or to a drainage ditch along the perimeter access road. The area between the upper and lower stormwater diversion berms is defined as the "leachate collection zone" (See Figure 17-4). All precipitation collected between the diversion berms will be defined as leachate since the stormwater in this area will come into contact with uncovered solid waste. The precipitation collected in the leachate collection zone will be collected in the leachate collection system and will be conveyed to the leachate storage pond.

17.5.3 Open Cells

Precipitation which falls into an open cell (ie. one that has not yet received solid waste) and collects at the low end of the cell will be removed by pumping . See Figure 17-5 for an example of an inactive cell. The cell will be pumped by inserting a pump (or intake hose of a pump) into the leachate collection line riser pipe. The stormwater pumped out of the riser pipe will be discharged into the perimeter access road drainage ditch.

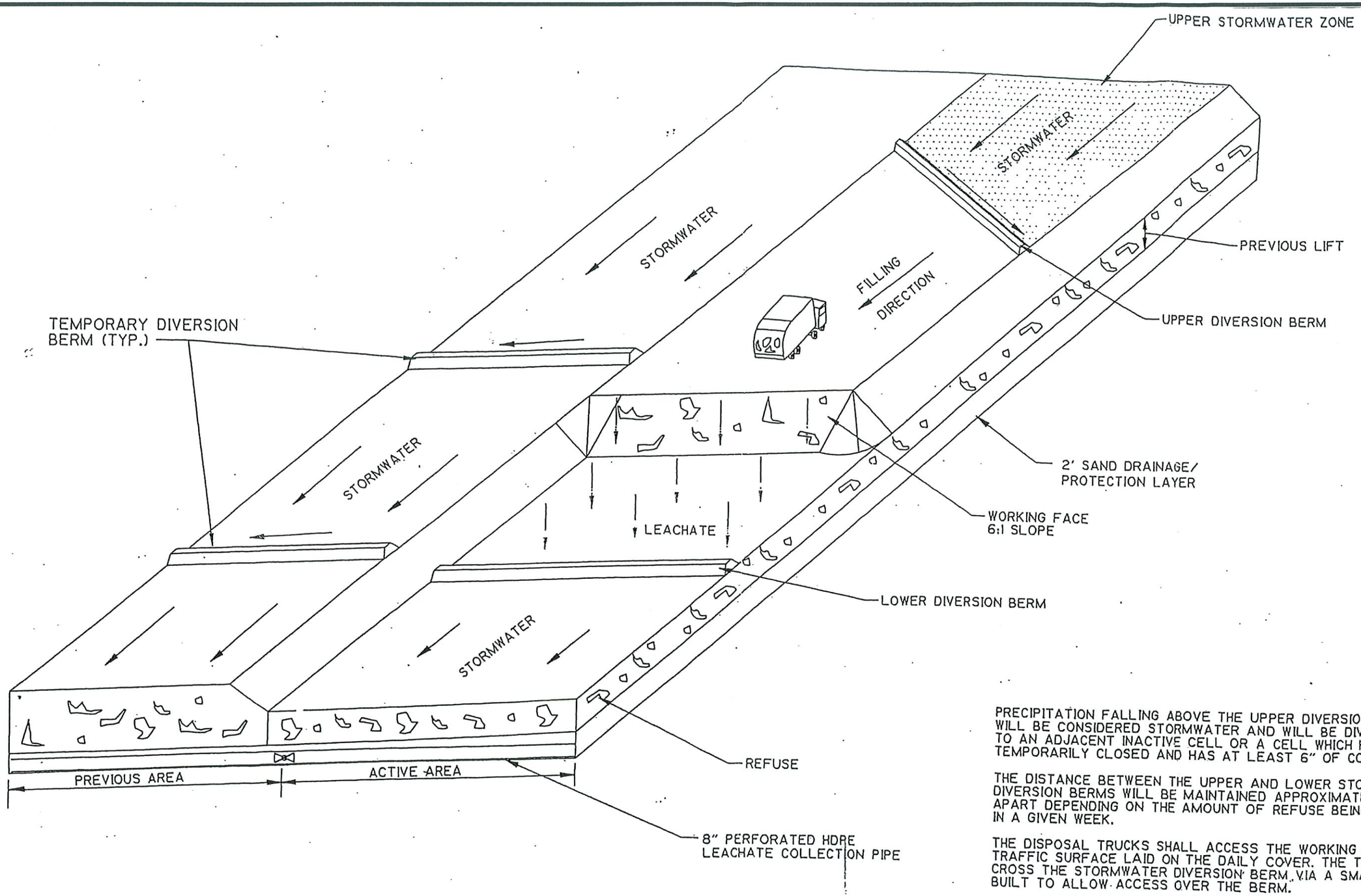

PRECIPITATION FALLING ABOVE THE UPPER DIVERSION BERM WILL BE CONSIDERED STORMWATER AND WILL BE DIVERTED TO AN ADJACENT INACTIVE CELL OR A CELL WHICH HAS BEEN TEMPORARILY CLOSED AND HAS AT LEAST 6" OF COVER MATERIAL.

THE DISTANCE BETWEEN THE UPPER AND LOWER STORMWATER DIVERSION BERMS WILL BE MAINTAINED APPROXIMATELY 175 FT. APART DEPENDING ON THE AMOUNT OF REFUSE BEING DISPOSED IN A GIVEN WEEK.

THE DISPOSAL TRUCKS SHALL ACCESS THE WORKING FACE BY A TRAFFIC SURFACE LAID ON THE DAILY COVER. THE TRUCKS SHALL CROSS THE STORMWATER DIVERSION BERM VIA A SMALL RAMP BUILT TO ALLOW ACCESS OVER THE BERM.

CDM

consulting • engineering • construction • operations

Figure No. 17-2
SUBSEQUENT LIFT - UPPER STORMWATER ZONE

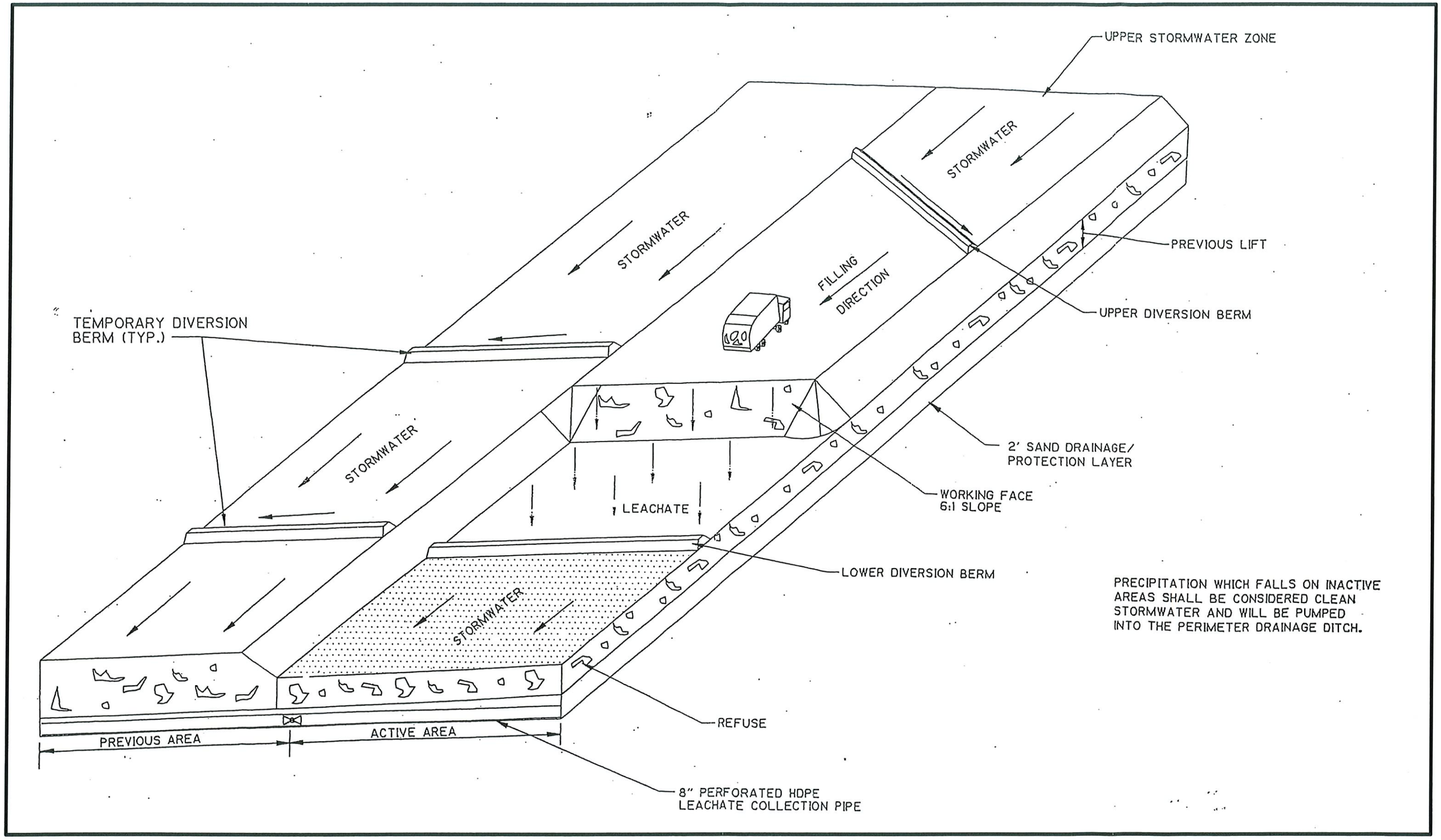

CDM

consulting • engineering • construction • operations

Figure No. 17-3

SUBSEQUENT LIFT - LOWER STORMWATER ZONE

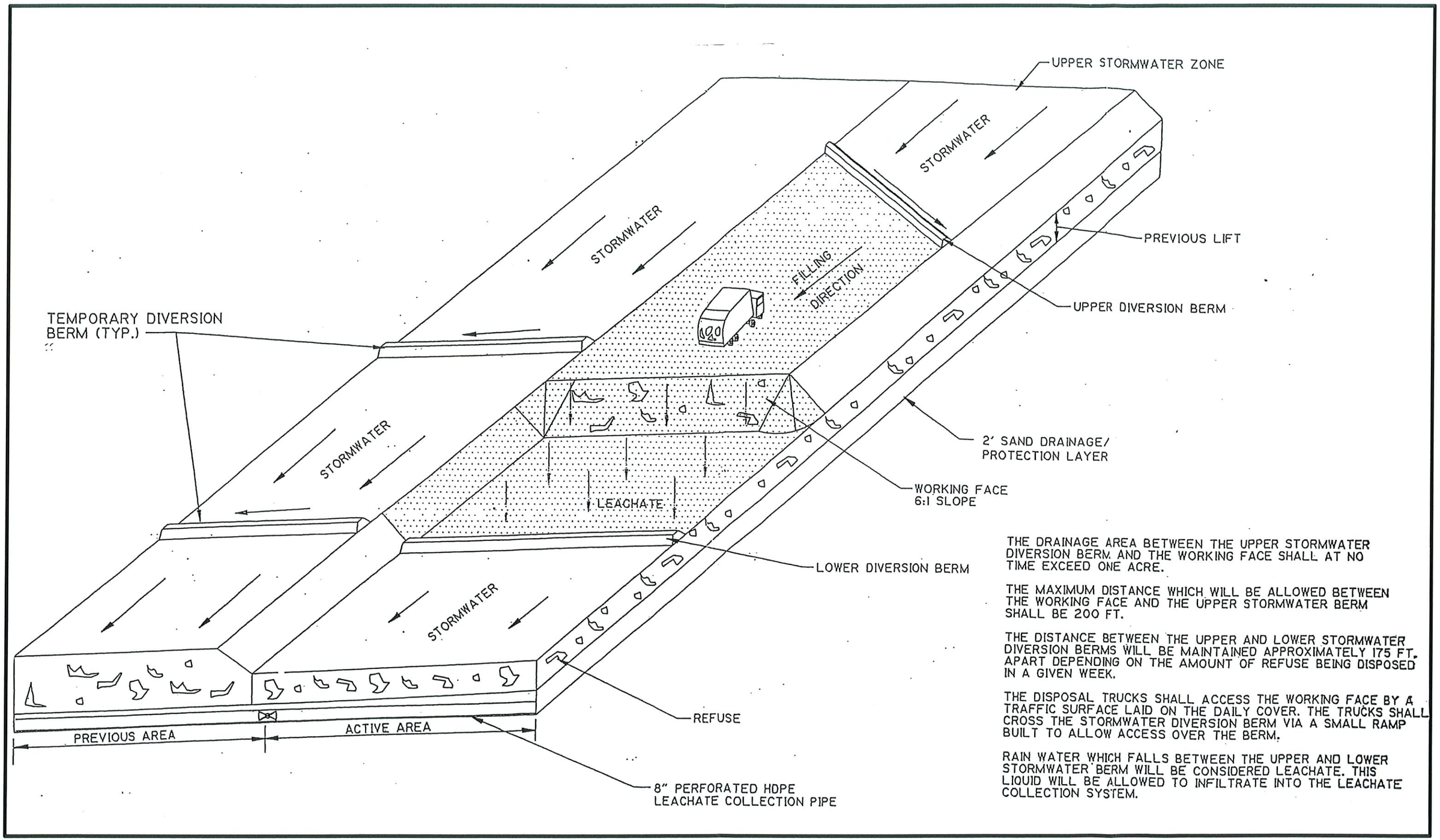

THE DRAINAGE AREA BETWEEN THE UPPER STORMWATER DIVERSION BERM AND THE WORKING FACE SHALL AT NO TIME EXCEED ONE ACRE.

THE MAXIMUM DISTANCE WHICH WILL BE ALLOWED BETWEEN THE WORKING FACE AND THE UPPER STORMWATER BERM SHALL BE 200 FT.

THE DISTANCE BETWEEN THE UPPER AND LOWER STORMWATER DIVERSION BERMS WILL BE MAINTAINED APPROXIMATELY 175 FT. APART DEPENDING ON THE AMOUNT OF REFUSE BEING DISPOSED IN A GIVEN WEEK.

THE DISPOSAL TRUCKS SHALL ACCESS THE WORKING FACE BY A TRAFFIC SURFACE LAID ON THE DAILY COVER. THE TRUCKS SHALL CROSS THE STORMWATER DIVERSION BERM VIA A SMALL RAMP BUILT TO ALLOW ACCESS OVER THE BERM.

RAIN WATER WHICH FALLS BETWEEN THE UPPER AND LOWER STORMWATER BERM WILL BE CONSIDERED LEACHATE. THIS LIQUID WILL BE ALLOWED TO INFILTRATE INTO THE LEACHATE COLLECTION SYSTEM.

CDM

consulting • engineering • construction • operations

Figure No. 17-4

SUBSEQUENT LIFT - LEACHATE COLLECTION ZONE

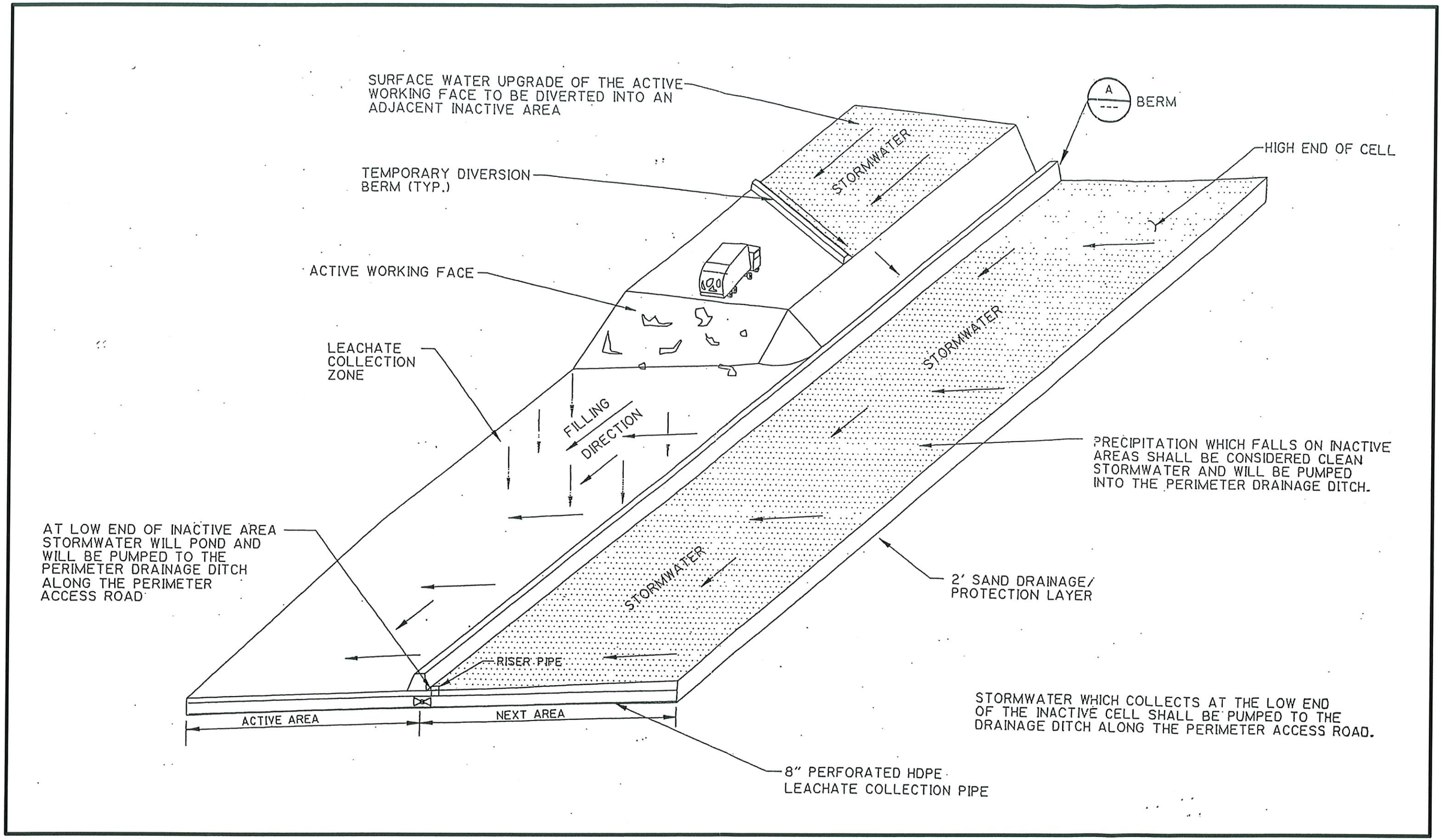

CDM

consulting • engineering • construction • operations

Figure No. 17-5
UPPER STORMWATER AND INACTIVE CELL

SECTION 4 - OPERATION PLAN
APPENDIX A

WASTE SCREENING PLAN

Appendix A - Contents

Section 1	Introduction	1-1
Section 2	Overview of Waste Screening Plan	2-1
Section 3	Regulatory Background	3-1
3.1	Federal and State Regulations	3-1
3.2	Materials Prohibited From MSW Landfilling	3-1
3.3	County Regulations	3-2
Section 4	Applicability	4-1
Section 5	North Carolina Solid Waste Determination Process	5-1
Section 6	Training	6-1
Section 7	Designated Area For Waste Screening	7-1
Section 8	Identifying Suspicious Waste Loads via Standard Landfill Operation	8-1
Section 9	Random Inspections of Incoming Loads	9-1
9.1	Selecting Loads for Sampling	9-1
9.2	Screening the Wasteloads	9-2
9.3	Procedures	9-3
Section 10	Records of Inspections	10-1
Section 11	Contingency Plan	11-1
Section 12	Notification	12-1
Section 13	Responsible Party	13-1
Section 14	Fines and Penalties	14-1

Section 1
Introduction

This Waste Screening Plan sets forth the procedures and programs implemented by the solid waste management staff of Buncombe County to identify and safely dispose of unauthorized wastes brought to the County owned landfill. This plan also presents the procedures and policies established by Buncombe County that comply with State and Federal regulations requiring random waste screening by owners of Municipal Solid Waste Landfills (MSWLF).

Buncombe County manages the storage, collection, and disposal of solid wastes in accordance with state and federal regulations and in a manner that protects the public health, safety, and welfare of the residents of Buncombe County. Some of the standard operating procedures at the landfill are designed to insure that unauthorized wastes, as defined by state and federal regulations, are not landfilled.

Current County programs and procedures fulfill some state and federal regulations for waste screening to detect or prevent landfilling of prohibited or unauthorized solid wastes. Some of these programs and facilities include:

- Hazardous waste awareness certification training for all landfill staff
- County owned and operated drop-off facilities for lead acid batteries, yard wastes, white goods, and whole scrap tires

Section 2
Overview of Waste Screening Plan

This Waste Screening Plan presents the standard operating procedures at the County landfill. It presents the procedures and contingency plan that the County will implement to comply with applicable State and Federal regulations.

This Waste Screening Plan:

- identifies the federal and state regulatory authority for prohibiting the landfilling of certain categories of solid waste;
- identifies and defines the wastes to which waste screening applies;
- describes the required training for facility personnel; and, describes the designated area to be used to screen waste loads;
- presents the procedures, decisions, and actions which will be taken if a waste load is suspected of containing a waste covered by this plan or is found to contain such a waste;
- explains how records of inspections will be kept and how notification of the proper authorities will take place if prohibited waste is discovered;
- clarifies the financial and legal responsibility of the County and the waste hauler who brings the prohibited waste to the landfills.

Section 3
Regulatory Background

Federal, state, and county regulations each prohibit certain categories of waste from being landfilled. This section presents the regulatory authority prohibiting certain categories of waste from being landfilled and the requirement for waste screening.

3.1 Federal and State Regulations

US EPA Subtitle D, Subpart C Operating Criteria, 40 CFR Section 258.20 (Procedures for Excluding the Receipt of Hazardous Waste) and North Carolina State Solid Waste Management Rules Title 15A, 13B subsection .1626 (1)(f) require that owners or operators of all municipal solid waste landfill (MSWLF) units to implement a program at the facility for detecting and preventing the disposal of regulated quantities of hazardous wastes and PCB waste. This program must include:

- random inspections of incoming loads,
- records of any inspections,
- training of facility personnel to recognize regulated hazardous waste and polychlorinated biphenyls (PCB) waste, and,
- a contingency plan including notification to authorized state or EPA RCRA Subtitle C administrator if a regulated hazardous waste is discovered at the facility.

3.2 Materials Prohibited From MSW Landfilling

By North Carolina and federal regulations, a MSWLF shall only accept for landfilling those solid wastes which it is permitted to receive. According to Rule 1626(1) the following wastes are prohibited from disposal at a MSWLF unit:

- Hazardous waste as defined within 15A NCAC 13 A, to include hazardous waste from conditionally exempt small quantity generators.
- Polychlorinated biphenyls (PCB) wastes as defined in 40 CFR 761.
- Liquid wastes unless it is household waste other than septic tank waste or waste oil.
- Containers holding liquid waste unless the container is a small container similar in size to those normally found in household wastes.

3.3 County Regulations

Buncombe County only accepts for landfilling materials it is permitted to receive by state solid waste permit.

This is limited to materials which comply with federal and state regulations as acceptable for MSW landfilling. Special wastes which receive state approval as described in Section 5.0 of this plan are accepted.

Buncombe County reserves the right to turn away any waste hauling vehicle containing materials it is not permitted to accept based on federal or state regulations and which in its judgement require special handling and cannot safely be managed by the operating staff of the Buncombe County landfill.

Section 4
Applicability

This Waste Screening Plan and related programs apply to all wastes regulated as hazardous waste as defined by Subpart D of 40 Code of Federal Register (CFR) Part 261; wastes which exhibit hazardous characteristics (including ignitability, corrosivity, reactivity, and toxicity) as defined in Subpart C of 40 CFR 261; wastes which are a mixture of hazardous and non-hazardous wastes; and PCB wastes as defined by 40 CFR Section 761.60.

This plan does not address: residential solid waste; waste that is exempt as a conditional small quantity as defined by 40 CFR Section 261.4(b) and 261.5; or, small quantities of PCB's found in items such as fluorescent ballasts and small capacitors typically found in consumer electric appliances. This plan does not apply to yard waste and scrap tires which are prohibited from landfilling primarily for recycling and waste reduction reasons. This plan does not apply to wastes that have been conditionally approved for landfilling by Buncombe County based on approval by North Carolina Department of Environment, and Natural Resources (DENR) through the "waste determination" process as described in Section 5.0 of this plan.

Section 5
North Carolina Solid Waste Determination Process

Some industrial and manufacturing solid wastes that may, by definition, be regulated and prohibited from being landfilled can be accepted for landfilling by Buncombe County if determined by the DENR to be safe. A "Waste Determination Form", together with the appropriate laboratory analysis; must be completed by the generator, approved by DENR, and returned to Buncombe County to receive this conditional approval for landfilling. When this waste is hauled to the landfill, the hauler must provide a letter verifying that the County has agreed to accept the waste.

If this letter (County "Special Waste Authorization") is not produced the waste load will be considered as hazardous and turned away or refused at the landfill. If the waste has been unloaded at the landfill, it will be managed based on the procedures identified in this waste screening plan. The hauler will be responsible for all costs and fines associated with removing the waste from the sanitary landfill.

Section 6
Training

The Buncombe County landfill Solid Waste Inspector is required by the County to satisfactorily complete the 40 hour OSHA training (Hazoper). All County solid waste management staff are also encouraged to complete this training. The Solid Waste Inspector has been instructed in the procedures, as described in this plan, to follow if hazardous or regulated waste is identified or suspected in a waste load received at the landfill.

Section 7
Designated Area For Waste Screening

A special area will be designated as the waste screening area. The designated area will be:

- inside the landfill site on property owned and managed by the County;
- at least 100 feet from the working face of the landfill and easily accessible to truck traffic;
- at least 100 feet within the landfill's disposal boundaries;
- on leveled ground with a surface of compacted soil similar to the soil throughout the landfill; and,
- •in an open area where it is protected or screened from to high winds (such as at the bottom of a hill)

Waste loads selected for random screening and suspicious waste loads will be taken to this designated area for screening. If the load is dumped or unloaded onto the ground in the designated area, and is found to contain hazardous or other wastes prohibited from being landfilled, the party who brought the waste to the landfill will be required to cover all costs associated with removal, treatment, and safe disposal of that waste load as well as any contaminated soil and surrounding natural features which occurred because of the unloading of the prohibited waste at the designated area. Verification of proper disposal of the waste and any additional and reasonable testing of the soil and water in the designated area, necessary to insure that no contamination remains are the legal and financial responsibility of the party who brought the waste to the landfill.

Section 8
Identifying Suspicious Waste Loads Via Standard Landfill Operation

As part of the standard operating procedures at Buncombe County landfill, all drivers of incoming loads are questioned about the content and source of their wasteload. Scale house operators and landfill staff, trained as per Section 6.0 to recognize hazardous waste and wastes prohibited from being landfilled, have the authority to:

- detain a waste load from being unloaded at the working face of the landfill,
- request additional information from the driver about the wasteload,
- divert the driver to the designated waste screening area,
- temporarily prohibit the wasteload from being deposited at the working face, and
- contact the landfill supervisor who has the authority to reject the waste load.

Figure 8-1 presents a flow chart/decision tree summarizing the points at which a landfill staff can stop a truck, which they believe to contain prohibited wastes, for further inspection. The procedure begins with a visual observation by landfill staff and a questioning of the driver as to the contents of the wasteload. Drivers of suspicious loads are asked if they have an approved Waste Determination Form or a County "Special Waste Authorization" letter. Files are searched to verify whether or not this letter exists for the load in question. Depending on the satisfactory answering of these questions and the judgement of the landfill staff, either the load is disposed of at the working face; or the landfill supervisor is contacted, a waste screening form/record of inspection is completed, and a further screening of the waste load takes place. If a wasteload is suspected of containing hazardous or prohibited materials covered by this plan, the waste hauler and the Buncombe County Solid Waste Inspector are immediately contacted by telephone and requested to send an authorized representative to the site of the wasteload. The driver and truck are released as soon as they have adequately completed their sections on the waste screening form and the waste hauler has been reached. If the wasteload was deposited at the working face, the wasteload is not moved or altered. Landfill operations will be moved away from the load until a final disposition can take place. Based on the discretion of the landfill supervisor and the County's Solid Waste Inspector, Buncombe County Emergency Management (CCEM) is contacted to come to the site and determine if the materials are hazardous or prohibited waste.

If the waste is determined to be non-hazardous and is permitted for landfilling under state, federal, and county laws, the County absorbs the cost for the testing by CCEM. If the waste is found to be hazardous or prohibited, the hauler will be billed for the testing by CCEM and be required to immediately remove the waste and demonstrate

Buncombe County
Standard Landfill Operating Procedures

Decision Tree for Waste Loads Suspected of Containing Hazardous Waste and Dangerous Materials

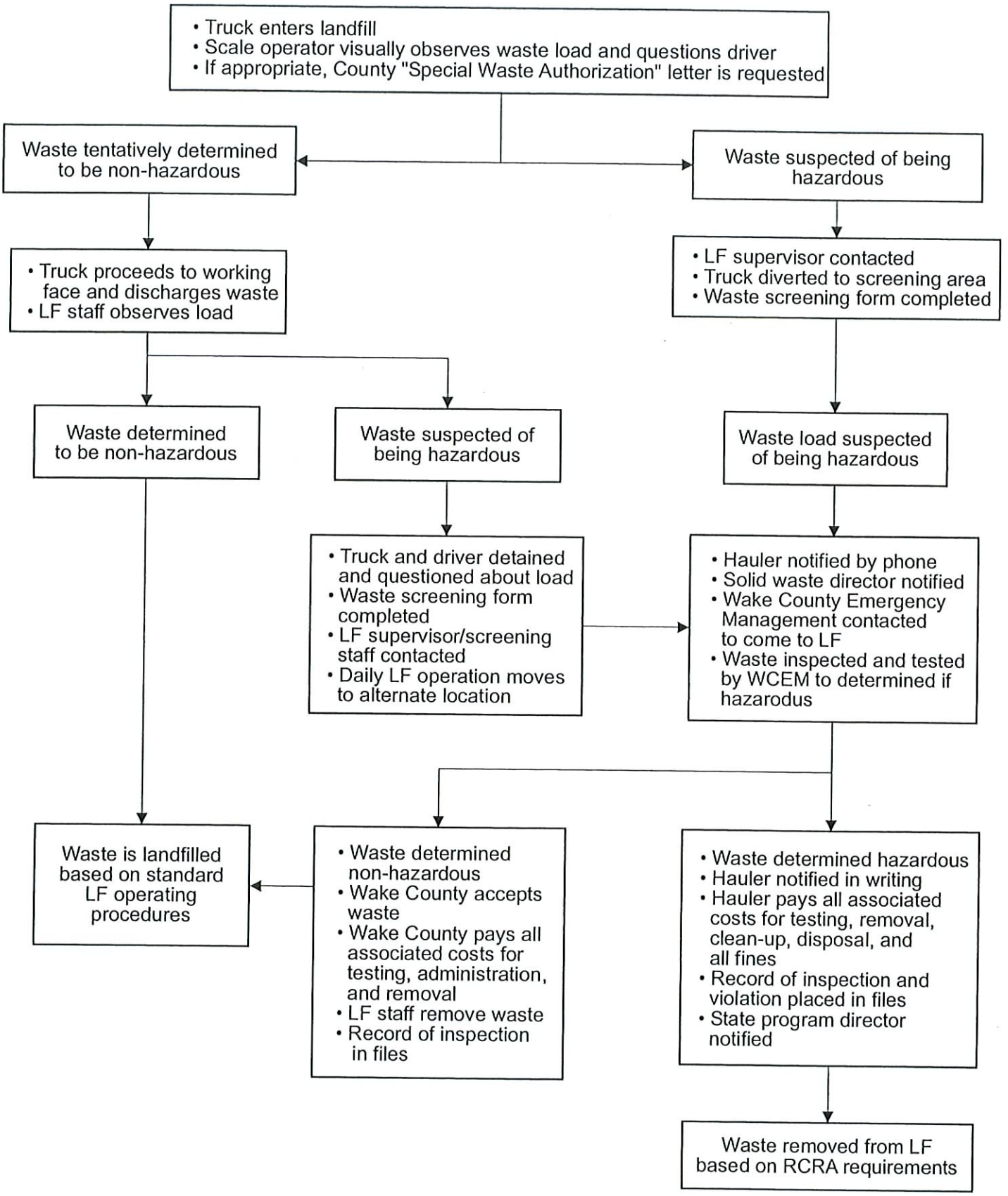

CDM

Figure No. 8-1
Suspicious Load

to the County and the State that it was disposed of properly. The hauler will also be required to cover all costs associated with site clean-up and verification that the site is safe. If the waste is not removed within 24 hours as required, the County shall have the waste removed and disposed of properly and bill the waste hauler for all the costs associated with its removal and site cleanup and repair.

Within one business day, the County will confirm in writing via certified mail to the DENR and the waste hauler, the attempted illegal disposal of prohibited waste, the actions taken by the County, and the disposition of the waste. All future waste loads from a hauler found to be in violation by attempting to dispose of hazardous and prohibited materials in the Buncombe County sanitary landfill, may be subject to additional waste screening. This additional screening may include screening every load of the hauler who has been previously found to be in violation.

Section 9
Random Inspections of Incoming Loads

While all loads entering the landfill are visually screened by landfill staff, they are generally not inspected in detail. Therefore random inspections are used to provide a reasonable means to adequately control the receipt of prohibited wastes.

9.1 Selecting Loads for Sampling

Wasteloads will be selected for screening based on some of the general principals of statistical random sampling. In selecting a statistically random sample, it is necessary to first identify or define the entire population from which the sample could be selected. Then it is necessary to give each individual member of that population an equal chance of being selected as a sample. It is also important to have approximately 80 to 100 usable samples as the basis for any conclusions made about the entire population. While there is no legal requirement that the waste loads selected for screening be "a random" sample, it is important to the overall validity of the program that the time and money spent by the County for this mandated screening program be cost effective.

Based on six operating days per week, an estimated 100 waste hauling vehicles per day carrying approximately 240 tons of waste per day enter the Buncombe County sanitary landfill. These vehicles carry waste from a mix of businesses, industries, residents, apartment complexes, and commercial establishments. All of these vehicles are potential sources of hazardous and prohibited wastes.

Random waste screening of residential solid waste is not required by state or federal regulations. Based on landfill records it is estimated that approximately half of the vehicles entering the landfill are carrying waste from residential sources. If residential wastes contain measurable quantities of hazardous or prohibited wastes it is assumed that these will be discovered and identified as a suspicious load through the standard landfill operating procedures.

It is typical that waste is collected from most commercial, industrial, manufacturing, and institutions on a weekly basis, therefore it is probable that if all waste loads for any one week were sampled, each load would have an equal chance of being selected. However, the composition of waste loads vary throughout the year and therefore sampling should occur throughout the year.

Based on these assumptions, the following annual schedule provides a basic format for selecting waste loads for random screening. This schedule is only recommended and may be varied:

- 80 waste loads will be screened over a 12 month period;
- 6 to 8 waste loads per day will be randomly selected over a three day period in each of four seasons;

- during the 12 month period each of the six days that the landfill is open for operation will be a sampling day at least twice except for Saturday which only needs to be a sampling day at least once during the year;

- of the 80 load total, a minimum of 20 will be industrial waste loads, a minimum of 20 manufacturing waste loads, and a minimum of 20 will be business or commercial loads;

- the exact days and loads to be sampled will remain random to reduce any attempts to avoid being sampled.

If after compiling information from the first year of random sampling, Buncombe County determines that less than 5 percent of the loads selected in the random screening contain any hazardous or prohibited materials, the frequency of the random screenings will be reduced to 40 random screenings per year phased as described above.

9.2 Screening the Wasteloads

Waste loads selected for random screening will be diverted to the designated waste screening area where the driver will be questioned about the loads contents before it is deposited onto the screening area. The waste screening form will be completed for all loads selected for screening. Upon answering the necessary questions for the waste screening form and unloading the waste load, the driver and truck may be released. Because this load has been randomly selected for waste screening, this release of the driver and vehicle is not intended to imply the County accepts the waste load.

The waste will be spread over the area for easy visual observation using a front end loader or similar piece of equipment. Care should be used not to break open any containers or drums. Containers and drums that are not easily identifiable or whose contents cannot be seen should be opened by properly trained waste screening personnel. Only trained waste screening personnel, wearing protective safety equipment should come in physical contact with the waste contained in the load selected for screening.

Upon verification that the solid waste passes the screening and is acceptable, Buncombe County will officially accept it for disposal. It is then transferred by landfill staff to the working face for disposal.

All wastes suspected of being hazardous will be handled and stored as hazardous until proven otherwise. All hazardous and prohibited waste testing at the landfill will be conducted by Buncombe County Emergency Management or other registered hazardous waste contractor hired by the County.

9.3 Procedures

Figure 9-1 presents a flow chart/decision tree summarizing the procedures that will be followed for the waste screening and procedures to be followed if prohibited wastes are identified. If a wasteload is suspected of containing materials covered by this plan, the waste hauler and County Solid Waste Inspector are immediately to be contacted by telephone and requested to send an authorized representative to the site of the wasteload. The driver and truck are released as soon as they have adequately completed their sections on the waste screening form and the waste hauler has been reached. Based on the discretion of the landfill supervisor and the County Solid Waste Inspector , Buncombe County Emergency Management is contacted to come to the site and determine if the materials are hazardous or prohibited wastes.

If the wastes are determined to be non-hazardous and are permitted for landfilling under state, federal, and county laws, the County absorbs the cost for the testing. If the wastes are found to be hazardous or prohibited, the hauler will be billed for the testing and be required to immediately remove the wastes and demonstrate to the County and the State that they were disposed of properly. The hauler will also be required to cover all costs associated with site clean-up and verification that the site is safe. If the wastes are not removed within 24 hours, as required by the County. The County shall have the wastes removed and disposed of properly and bill the waste hauler for all the costs associated with their removal and site cleanup and repair.

Within one business day the County will confirm in writing via certified mail to the N.C. DEHNR and the waste hauler, the attempted illegal disposal of prohibited waste, the actions taken by the County, and the disposition of the waste. If a hauler is found to have attempted to dispose of hazardous or prohibited materials in the Buncombe County sanitary landfill, future additional waste screening for that hauler may be required. This additional screening could include screening every load of the hauler who has been previously found to be in violation. The County also reserves the right to refuse all future waste loads from a hauler found to be in violation.

Buncombe County

Random Waste Screening Program Decision Tree

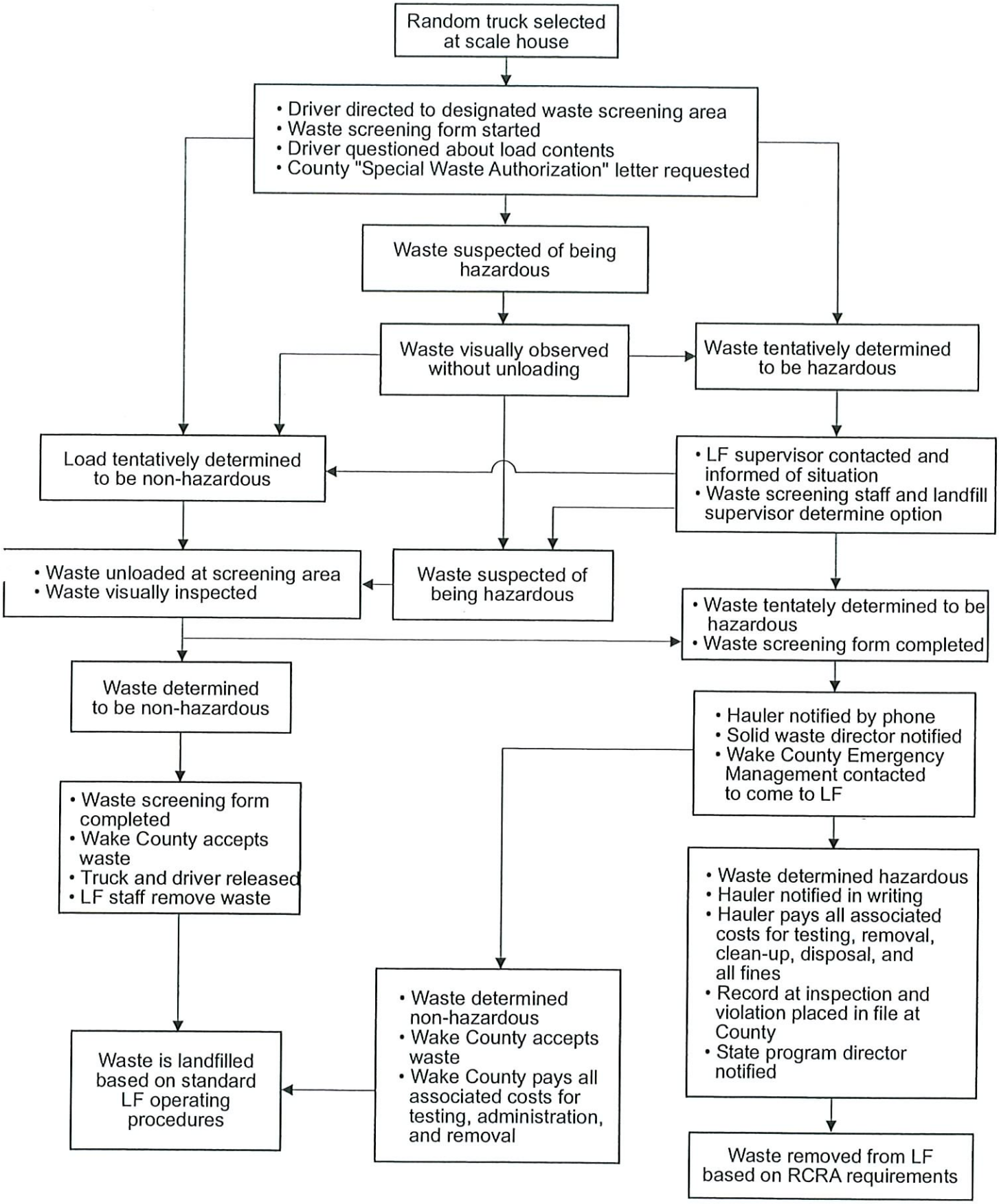

CDM

Figure No. 9-1
Random Inspections

Section 10
Records of Inspections

Figure 10-1 presents a sample waste screening inspection form. It will be completed for every wasteload screened through the random inspection program and for every incident where landfill staff suspect a waste load contains prohibited or hazardous waste and the driver cannot verify that these suspicions are false. The form will be completed by landfill staff, waste screening staff, and if appropriate signed by the waste driver. One copy will be kept on file at the landfill where the wasteload was received. One will be kept on file as open public record at the Buncombe County Manager's Office. This copy or a permanent record of it, will remain on file for a minimum of 30 years. If the waste load is found to contain materials that are prohibited or hazardous based on this plan, copies of the form will be sent to the DENR and the waste hauler.

Figure 10-1

Buncombe County Solid Waste Management Facility
85 Panther Branch Road
Alexander, NC 28701

828-645-5311

RECORD OF INSPECTION

Day: _____ Time Crossed Scales: _____
Truck Owner: _____ Driver Name: _____
Truck Type: _____
Vehicle ID# or Tag #: _____
Weight: _____
Tare: _____
Waste Generating Company/Source: _____

Reason Load Inspected:
_____ random inspection _____ staff initials
_____ detained by scale house _____ staff initials
_____ detained by LF operating staff _____ staff initials

Approved County "Special Waste Determination" letter present _____ Yes _____ No _____ N/A
Description of waste load: _____

Disposition: Load Accepted (signature) _____ Date: _____
Load Not Accepted (signature) _____ Date: _____

Reason Load Not Accepted: (complete this section only if waste NOT ACCEPTED)

Description of Suspicious Contents:
color _____ Haz. Waste markings _____
texture _____ smell _____
drums present _____ approx Cu. Yds. present in load _____
approx tons present in load _____

Wake County Emergency Management Contacted: _____ Yes _____ No
Hazardous or dangerous materials present: _____
(Wake County Emergency Management test results or verification attached)

Hauler notified (if waste not accepted)
Phone: _____ Time person contacted: _____
Other observations: _____

Final Disposition: _____
Signed by: _____ Date: _____
(Waste Screening Inspector or Landfill Supervisor)

Section 11
Contingency Plan

If during a random screening or during regular operation of the landfill, hazardous materials or materials defined by this waste screening plan as dangerous are discovered at the landfill, the landfill supervisor on duty has the authority to contact appropriate emergency personnel (911) and request their immediate action to remove and safely dispose of the prohibited waste. All telephone and written notification will take place within the first business day of the discovery of such materials. A completed waste screening form, letters of notification, and test results will be filed as required in Section 10

Section 12
Notification

Within the next business day of verification that a hazardous or prohibited waste has been identified at the landfill site, the County Solid Waste Management staff will send written notification via certified mail to the authorized state or EPA RCRA Subtitle C administrator; the County Manager; the manager of landfill operations; and the waste hauler that brings the waste to the landfill.

Section 13
Responsible Party

Legal responsibility for all waste entering the landfill remains with the waste hauler until such a time that it is determined to be permitted solid waste and is accepted by the County. The County does not accept the legal responsibility for waste which is prohibited from being landfilled in a sanitary landfill. The hauler is defined as the responsible party who attempted to, either knowingly or unknowingly, illegally deposited the prohibited waste in the landfill. The hauler shall be billed by the County for all costs associated with illegal disposal non-acceptable of solid waste. This includes, but is not limited to, costs in testing the waste, removing the waste from the sanitary landfill, for the cost of transporting the waste to an appropriate waste management facility, for the disposal fee, and for all necessary and related site clean-up and testing.

If after testing at the landfill by Buncombe County Emergency Management (CCEM) or the County's authorized contractor, the waste load is found to be materials which can legally be landfilled, the County will accept legal responsibility for it. The County or their contractor (as per contract agreement) will absorb all costs for testing and removal or disposal of the waste.

If CCEM or the County's authorized contractor, finds that the waste load contains hazardous or regulated materials that should not be landfilled, the County will not absorb the costs for any further testing either at the landfill or at another laboratory. If further testing by other laboratories indicate the materials could legally be landfilled, the County will be assumed to have "acted in good faith" to protect the public health and safety by refusing to landfill the waste. The County will not reimburse any cost associated with removal of the materials from the landfill site or its subsequent testing or disposal.

Section 14
Fines and Penalties

Buncombe County reserves the right to institute fines and penalties to any person found to have attempted to landfill waste prohibited from being landfilled by state or federal regulations. These fines and penalties are in addition to the costs identified in Section 13.0.

SECTION 4 - OPERATION PLAN

APPENDIX B

LANDFILL GAS MONITORING PLAN

Appendix B - Contents

Section 1 Introduction

1.1 Purpose 1-1
1.2 General Characteristics of LFG and Methane Generation 1-1
1.2.1 Decomposition Rate and Volume 1-1
1.2.2 LFG Migration 1-2

Section 2 Regulatory Background

2.1 Introduction 2-1
2.2 Subtitle D and North Carolina Regulations 2-1
2.3 Clear Air Act 2-2
2.3.1 Summary of the Proposed Regulations 2-3
2.3.2 Compliance 2-3

Section 3 LFG Monitoring System: Design and Installation

3.1 Summary of Recommendations 3-1
3.2 Well Design & Depth 3-1
3.3 Conceptual Design 3-3
3.4 Monitoring Equipment Needed 3-3

Section 4 LFG Monitoring Program

4.1 Frequency of Routine Monitoring 4-1
4.2 Staffing 4-1
4.3 Monitoring Procedures 4-1
4.4 Record Keeping 4-2

Section 5 Contingency Plan

5.1 Actions If Regulatory Limit is Detected in Structures 5-1
5.2 Actions If Regulatory Limit is Detected at Monitoring Wells 5-1
5.3 Subtitle D Compliance Action Plan 5-2
5.3.1 Immediate Action 5-2
5.3.2 Actions Within Seven Days 5-3
5.3.3 Actions Within Sixty Days 5-3
5.4 Public Relations and Information 5-3

Section 6 Options for Controlling LFG

6.1 Migration Control Techniques 6-1
6.1.1 Impermeable Physical Barriers 6-1
6.1.2 Passive Removal System 6-1
6.1.3 Active Removal System 6-1

6.1.4 Air Injection 6-2
6.2 Environmental Control Techniques 6-2
6.2.1 Control Through LFG Recovery Systems 6-2
6.2.2 Control Through Flaring LFG 6-3

Section 7 Bibliography 7-1

Appendix B - Figures

3-1 Typical Methane Gas Monitoring Well Design 3-3
3-2 Gas Well Slotting Detail 3-4
3-3 Guard Post 3-5

Appendix B - Figures

3-1 Typical Methane Gas Monitoring Well Design 3-3
3-2 Gas Well Slotting Detail 3-4
3-3 Guard Post 3-5

Section 1
Introduction

Landfill gas (LFG) is a natural by-product of the anaerobic decomposition of landfilled bio-degradable waste. LFG can present a danger to human health and the environment and therefore must be monitored. For these reasons, LFG is regulated by Federal and North Carolina state legislation. This Plan describes the systems and programs needed to fulfill federal and state regulations concerning LFG. In addition, this Plan describes the characteristics of LFG and its migration patterns; and provides alternative methods to control and destroy its harmful components. This additional background information is presented in the Plan to insure it is readily available should a situation occur that requires information and action beyond that described in this Plan.

1.1 Purpose

This Plan fulfills the requirements set forth in Subtitle D and the North Carolina Solid Waste Management Rules for monitoring and controlling LFG. This Plan:

- describes the necessary LFG monitoring systems,
- sets forth the monitoring procedures and programs, and
- dentifies the actions needed if levels of methane exceed regulatory limits.

1.2 General Characteristics of LFG and Methane Generation

Landfill gas (LFG) can be an energy resource as well as a source of environmental pollution. What makes LFG valuable as an energy resource is its methane content. LFG is composed of approximately 50 percent methane in contrast to natural gas which consists of approximately 95 percent methane. LFG programs which focus on recovering gas as an energy resource include collection and extraction systems used to maximize its recovery. What makes LFG a source of environmental pollution is its odor, its potentially explosive properties, and its contribution to global warming. LFG programs which focus on the environmental hazards of landfill gas include collection systems to monitor the migration of gas and control or neutralize its environmental impacts.

LFG is composed of 50 - 55 percent methane (CH_4); 45 - 50 percent carbon dioxide (CO_2); and, less than one percent non-methane organic compounds. These individual gases remain co-mingled and do not naturally separate.

1.2.1 Decomposition Rate and Volume

The decomposition of bio-degradable waste begins with aerobic decomposition that typically lasts three to 18 months until the oxygen in the landfill is depleted.

Following this, the anaerobic phase begins which results in LFG production. This anaerobic phase continues until all of the carbon-based materials are broken down or oxygen is reintroduced. Some historical LFG production generation models suggest that LFG generation continues for as long as 20 years. However, recent LFG recovery projects in California have demonstrated that production may continue beyond these 20 year estimates.

A reintroduction of oxygen does not stop the production of LFG, it just retards it. The volume of LFG generated over the life of a landfill is a function of the total volume of organic waste in the landfill as influenced by age, moisture, compaction, and pH.

1.2.2 LFG Migration

The production of LFG creates a positive pressure within the landfill that forces the gas to migrate. LFG is lighter than air and moves upward unless there is a barrier. LFG will move laterally along the path of least resistance or lowest pressure. LFG migration is a function of soil conditions, hydrogeologic conditions, and weather conditions. LFG moves through porous soils, along underground pipes, and through trenches. In some cases the LFG migration path can be observed at the surface through observations of stressed vegetation. In these instances LFG replaces the oxygen in root structures and eventually destroys the plants.

If tightly capped, LFG will move downward or laterally. Unless LFG is collected, it may migrate laterally, off the landfill site. If the landfill does not have an impermeable cover cap, LFG may migrate upward, through the landfill surface and cause odor and air quality problems. The lining and capping of a landfill does not effect the production of gas, it only improves the potential to collect and control it.

Section 2
Regulatory Background

2.1 Introduction

Because of the real and potential dangers from LFG and the methane in landfill gas, to the public health and safety and to the environment, existing and pending federal and state regulations require owners of municipal solid waste landfills (MSWLFs) to monitor and control it. The regulations are contained in Section 258.23 of Subtitle D of the Resource Conservation and Recovery Act (RCRA) and Title 15 A NCAC Subchapter 13 B Section .1626 (4).

Other applicable federal regulations relating to LFG, which come under the Clean Air Act, are pending. They are expected to become law by the spring of 1994. These regulations will be potentially more restrictive than the existing Subtitle D regulations.

2.2 Subtitle D and North Carolina Regulations

Methane gas is explosive when present within the range of five percent to 15 percent by volume in air. When present in concentrations greater than 15 percent, the mixture will not explode. The five percentage mixture is referred to as the Lower Explosive Limit (LEL) while the 15 percentage concentration is referred to as the Upper Explosive Limit (UEL). The State of North Carolina, through its 15A NCAC 13B .1626 (4) (a); and EPA, through the Subtitle D regulations part (a) of Section 258.23 parts (a) and (b) requires owners of operating MSWLFs, by October 9, 1993, to ensure that the facility:

- does not exceed 25 percent of the lower explosive limit for methane in facility structures; and
- does not exceed the lower explosive limit at the facility property boundary.

The lower explosive limit means the lowest percent by volume of a mixture of explosive gases in air that will promulgate a flame at 250 C and atmospheric pressure.

Part (b) of Section 258.23 and part (b) of Section .1626 of the North Carolina regulations require that a routine methane monitoring program be implemented to insure that these standards are met. A methane monitoring program typically involves sampling LFG emissions, using a specially designed meter, through a system of strategically located and specifically designed wells, on a regularly scheduled basis. The time and frequency of monitoring must be determined based on soil conditions, hydrogeologic conditions and hydraulic conditions surrounding the facility, and locations of structures and property boundaries. However, compliance with Subtitle D requires that the minimum frequency of monitoring be quarterly.

Part (c) of Section 258.23 and part (c) of Section .1626 of the North Carolina regulations require that if methane levels exceed the specified limits, the owner or operator must:

- immediately take all necessary steps to ensure the protection of human health;
- immediately notify the State Director (it is assumed that this will be the Director of the North Carolina DSWM);
- within seven days of detection, place in the operating record the methane gas levels detected;
- within seven days of detection, provide a description of the steps taken to protect human health;
- within 60 days of detection, implement a remediation plan for the methane gas release; the plan shall describe the nature and extent of the problem and the proposed remedy;
- within 60 days of detection, place a copy of the plan in the operating record of the landfill; and
- within 60 days of detection, notify the State Director that the plan has been implemented.

2.3 Clean Air Act

On May 30, 1991, EPA proposed new source performance standards (NSPS) and emission guidelines for air emissions from municipal solid waste landfills. These were proposed under Section 111 of the Clean Air Act (CAA). Officials at EPA expect the final rules to be promulgated by the spring of 1994. The proposed regulations are intended to reduce five health and environmental effects of LFG generated by MSWLFs:

- explosive hazards;
- global warming effects from methane emissions;
- human health and vegetative effects caused by the non-methane organic compounds;
- carcinogenicity and non-cancerous health effects; and
- odor nuisance.

2.3.1 Summary of the Proposed Regulations

The portion of the NSPS that affect MSWLFs are under Section 111(b) and 111(d) of the CAA. The proposed standards and guidelines require the periodic calculation of an annual NMOC (non-methane organic compound) emission rate at each affected or designed MSWLF facility. The calculation will involve the use of a model or formula contained in the regulations. At each facility where the calculated emission rate is equal to or exceeds the regulatory cut off of 150 Mg/yr (167 tpy) of non-methane organic compounds, the MSWLF will be required to design and install a LFG collection system and then combust (with or without energy recovery) the captured LFG. The proposed standards are based on the use of an active collection system (i.e. a system that "actively" or mechanically draws out the LFG) and flares the gas to satisfy a 98 percent destruction criteria. Other control devices will be acceptable if they can demonstrate this level of destruction.

2.3.2 Compliance

The proposed NSPS will apply to MSWLF's with a maximum annual design capacity equal to or over 111,000 ton. The owners of these units are expected to annually prepare and submit the NMOC emission calculation. If the calculation demonstrates a NMOC emission rate greater than 150 Mg/yr, the owner must implement a LFG collection and "destruction" program. However, based on the proposed regulations and existing Buncombe MSWLF size, it is unlikely that the CAA will apply.

Section 3
LFG Monitoring System: Design and Installation

The first step needed to meet Subtitle D and North Carolina LFG requirements involves installing a LFG monitoring system. The next step involves implementing a monitoring program. The third step requires developing a plan for the actions that will be taken if monitoring results meet or exceed the regulatory limits. This section describes the proposed monitoring system. Section 4.0 describes the monitoring program. Section 5.0 described the proposed plan for actions.

A monitoring system could consist of trenches, wells, or probes designed and equipped to monitor methane migration and concentration. Portable monitoring equipment is needed to complete the system if it is not installed at the well heads. Equipment can include portable hand-held meters or probes that can be used to measure the level of methane and non-methane trace elements in the LFG.

3.1 Summary of Recommendations

Subtitle D regulations do not provide specific guidance regarding design requirements for LFG monitoring systems. An LFG monitoring system should be constructed in phases as landfill development progresses. System design based on several factors, including: 1) the observation of no visible sign of methane migration, 2) the assumption that the soils in the landfill are fairly uniform in composition and compaction (which would indicate that there is no specific path that the methane would take to migrate away from the site), and 3) the site specific size and logistic layout of the landfill.

3.2 Well Design and Depth

Subtitle D does not provide specifications for either well design or spacing. The state, through the Solid Waste Section, has not formalized well design nor spacing requirements as of this writing.

It is proposed by this report that the well design compliment the standards defined in the CAA regulations. Discussions with state staff indicated that North Carolina is considering following standards similar to those proposed in the CAA. Figure 3-1 shows one option for the proposed design of the methane monitor wells.

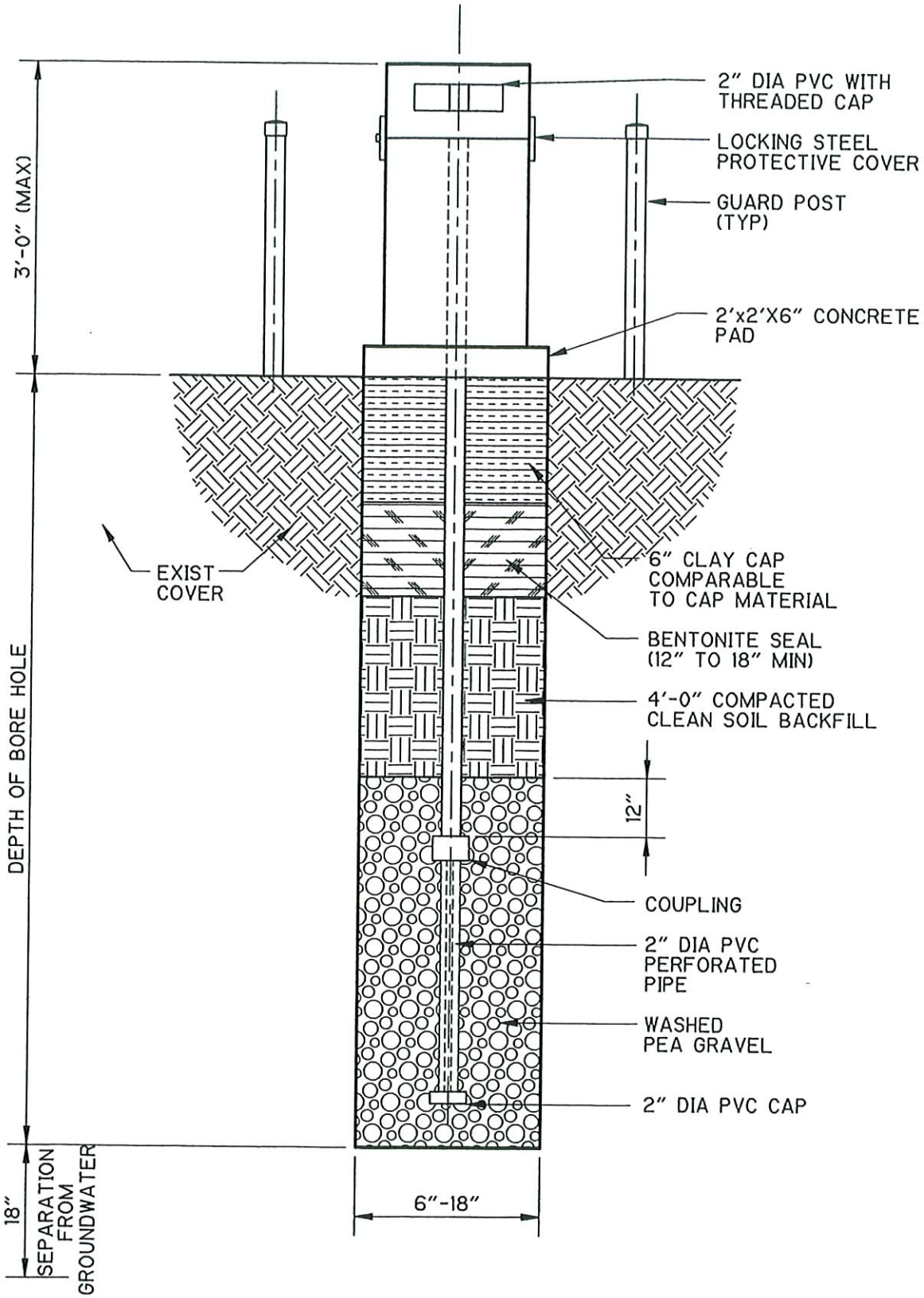

ROCKINGHAM LANDFILL OPERATIONS PLAN

TYPICAL METHANE GAS MONITORING WELL DESIGN

CDM
environmental engineers, scientists, planners, & management consultants

Figure No. 3-1

Each well is to be installed using a drill rig to a depth of approximately 18 inches above the seasonal high ground water table. Based on a review of the existing ground water monitoring wells and boring logs, the average depth to the ground water is approximately 20 feet. It is recommended that each well be dug to ground water to insure adequate depth. A pipe, perforated over the bottom two thirds of the well depth will be placed in the center of the well. A minimum requirement for perforations is holes or slots with and open area equivalent to .01-m (1/2 in.) diameter spaced 90 degrees apart every 0.1 to 0.2 m (4 to 8 in.). A detail of the pipe perforations is located on Figure 3-2. Additionally, a detail of the Guard Post at the well head is located on Figure 3-3.

After the pipe is placed in the center of the hole, it is backfilled with pea gravel to a level 0.3 m (one ft) above the perforated section. A layer of back-fill material at least 1.2 m (four ft) thick is added. A layer of bentonite 0.45 m (18 inches) thick is added and the remainder of the hole is backfilled with cover material or material equal in permeability to the existing cover cap material.

3.3 Conceptual Design

The specific location, design and installation of monitoring wells in future cells should be included and modified as necessary in the design of future cells.

Wells are recommended to be located approximately 500 feet apart for several reasons.

- The visual inspection of the site did not indicate any areas of immediate concern for methane migration.
- Observations of the soil in and around the landfill indicates that it is a sandy clay and fairly uniform throughout the site.
- Neither the state nor USEPA have established designated spacing standards for methane monitoring wells.
- A literature search and review of EPA technical guidance documents proved no specific recommended spacing for methane monitoring wells.

This spacing should provide a uniform sampling over the entire perimeter of the landfill. While little information currently exists in the literature which discusses appropriate distances between wells, the County may choose to modify this distance for future cells in the foot print area of the lined site.

3.4 Monitoring Equipment Needed

In order to monitor the methane levels at the wells and inside structures on the landfill, one or more methane monitoring devices will be needed. Several types of meters and monitoring devices are available. One variety of methane monitoring

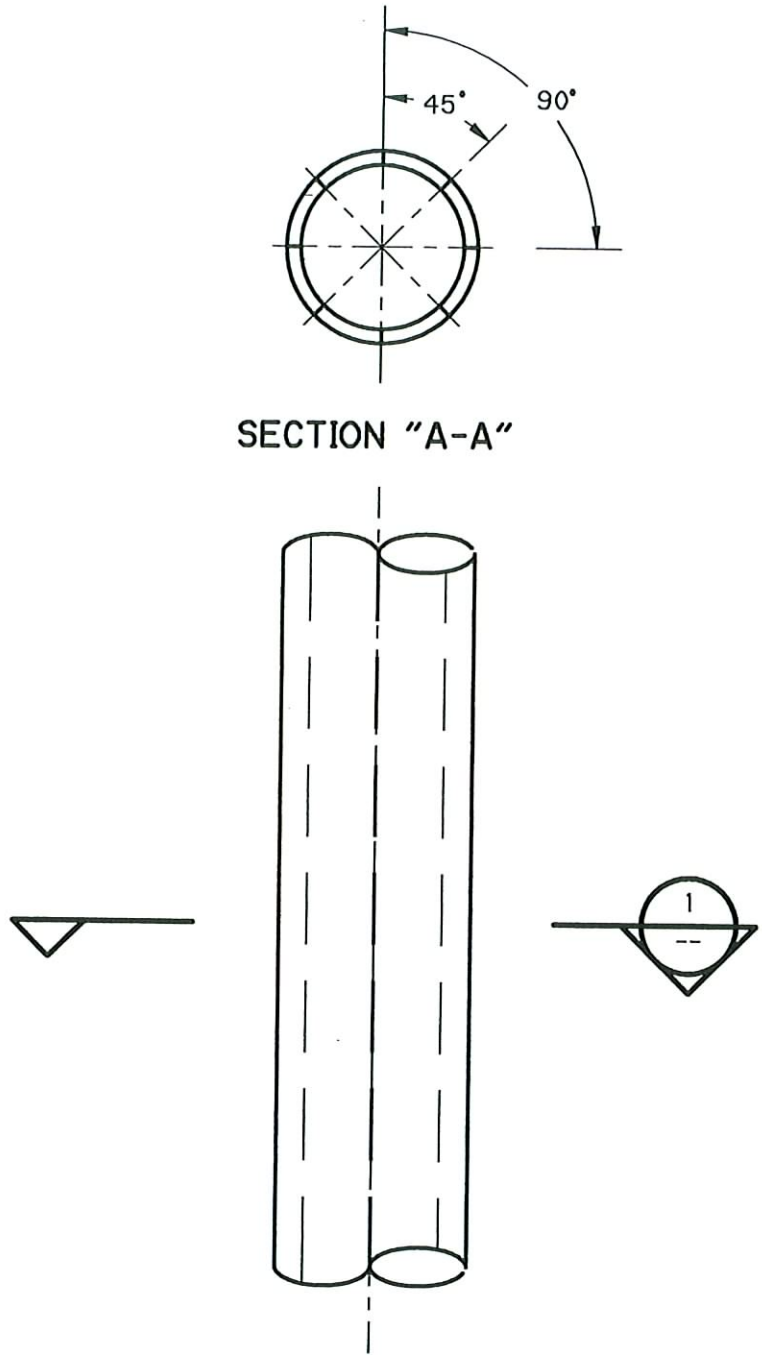

ROCKINGHAM LANDFILL OPERATIONS PLAN

GAS WELL
SLOTTING DETAIL

CDM
environmental engineers, scientists,
planners, & management consultants

Figure No. 3-2

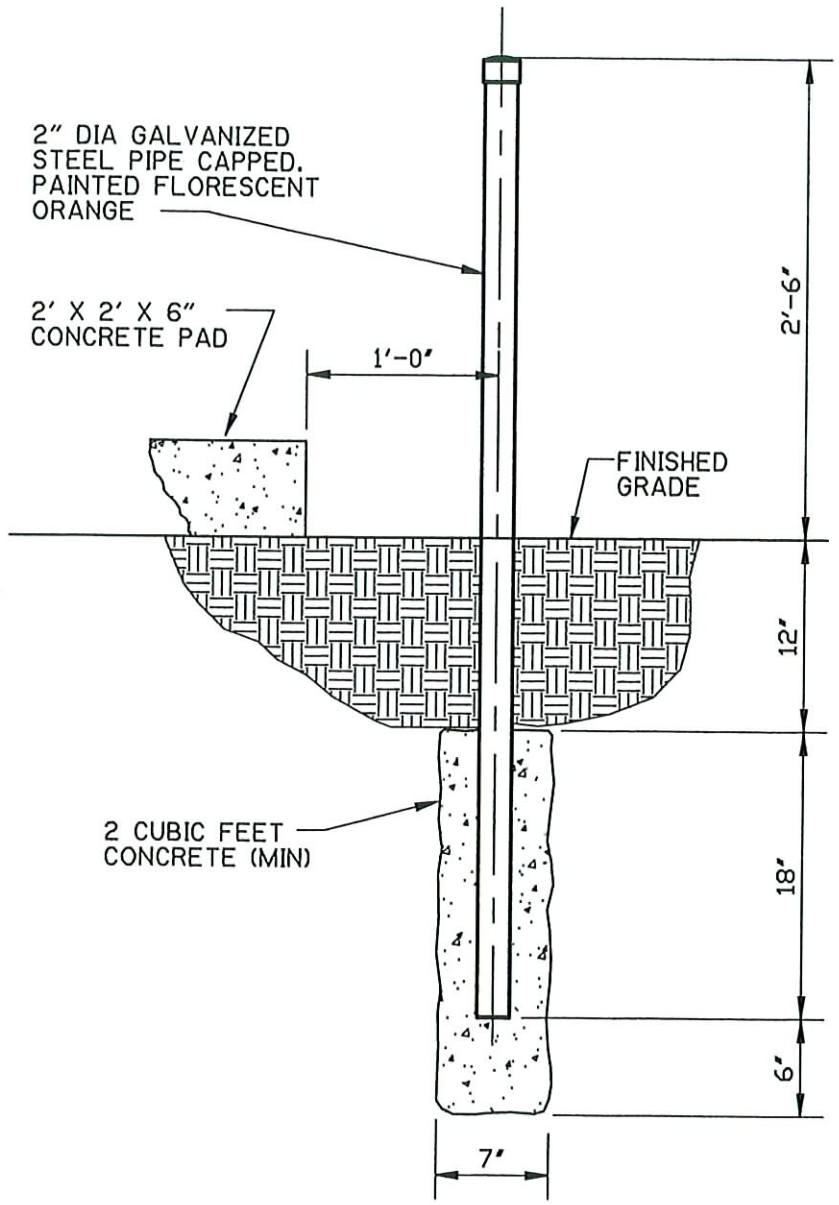

ROCKINGHAM LANDFILL OPERATION PLAN

CDM
environmental engineers, scientists, planners, & management consultants

GUARD POST

Figure No. 3-3

meter is a Gas Tech LEL Meter which sells for approximately $2,000.00. This is designed like a probe which is stuck into a well and the LEL is read. Another type of meter is a hand-held meter, also around $2,000.00, which can be used inside a building to measure the methane level in the room. It is recommended that the County purchase the necessary monitoring meters to measure levels inside structures and to measure levels at well heads.

Section 4
LFG Monitoring Program

In addition to installing a system of monitoring wells, purchasing monitoring equipment, and budgeting for services, it will be necessary in the future to implement an LFG monitoring program.

A monitoring program, includes a schedule for reading or monitoring LFG emission levels at designated locations on a regular basis and a system for reporting the concentration levels.

The requirements for regularly reading the emission levels, and the plan for actions if readings exceed safe levels should, at a minimum, be based on compliance with state and federal regulations. The plan that is recommended in this report exceeds the regulatory criteria to further protect the health and safety of nearby residents.

4.1 Frequency of Routine Monitoring

Subtitle D regulations require quarterly monitoring of methane beginning October 9, 1993. It is recommended that a quarterly methane monitoring program be implemented when the site opens and continue throughout the active life of the site. Monthly or more frequent monitoring may become necessary if levels are close to the regulatory levels or demonstrate a pattern which is approaching this limit.

4.2 Staffing

Monitoring should consist of having a trained technician use calibrated equipment designed to determine the level of methane escaping the landfill through monitoring wells and inside structures on the landfill site.

The job of monitoring the methane levels will require a trained staff person. Available options include training an existing staff person, hiring a special contractor, or hiring part-time staff to perform this task.

4.3 Monitoring Procedures

Each regular quarterly monitoring procedure should begin by checking methane levels in the scale-house and any occupied structure on the landfill site. Next, the non-occupied buildings at the landfill should be checked. Finally, monitoring wells at the facility property boundary should be checked.

If the methane levels detected within on-site buildings are greater than 25 percent of the lower explosive limit, the technician shall immediately follow the actions presented in Section 5.1 of this report. If methane levels detected at the wells at the facility property boundary exceeds the lower explosive limit, the technician shall immediately follow the action plan presented in Section 5.2.

4.4 Record Keeping

All readings will be recorded on a standard methane monitoring log form. A sample methane monitoring log is provided at the end of this section. These forms will be reviewed and initialed by the landfill supervisor or the County's Environmental Consultant and then placed in the landfill operating records. These quarterly methane monitoring logs will remain on file at the landfill with other landfill records. These readings should be available for review by EPA and the State upon request.

METHANE MONITORING LOG FORM
(this report must be completed quarterly)

Buncombe County Landfill
Buncombe County, North Carolina

Technician Name: _____

Date: (mo/day/year)_____

General weather conditions: _____

Temperature: _____

Barometric condition pressure: _____

MONITORING INSTRUCTIONS

1. Measure methane levels within structures on the landfill property. The landfill gas reading must not exceed 25% of the methane lower explosive limit (L.E.L). If methane measurements exceed 25% of the L.E.L., contact the landfill supervisor and follow the outlined plan in Appendix B of the operations manual.

2. Measure methane levels at all nine methane monitoring wells located around the landfill boundaries. The landfill gas reading must not exceed 100% of the methane L.E.L. If methane measurements exceed 100% of the L.E.L., contact the landfill supervisor and follow the outlined plan in Appendix B of the operations manual.

3. Complete the entire data sheet located on the reverse side.

4. If methane levels exceed the above-mentioned levels at any monitoring location, report the measurements to the Environmental Consultant at the following number: (919) 342-8104.

5. File this methane monitoring log sheet in the landfill office in the appropriate record keeping section with other landfill records.

METHANE MONITORING DATA SHEET

Monitoring Locations	*% L.E.L. Reading*	*Within Compliance*		*Landfill Supervisor Contacted*		*Monitoring Point within Structure*
		Yes	*No*	*Yes*	*No*	
Scale house						
Admin. bldg.						
Drop-off facility						
Field service storage						
Field service bldg.						
Methane well-1						
Methane well-2						
Methane well-3						
Methane well-4						
Methane well-5						
Methane well-6						
Methane well-7						
Methane well-8						
Methane well-9						

Comments and Observations:

Landfill Supervisor Actions Taken:

Section 5
Contingency Plan

Both Subtitle D and the North Carolina Solid Waste Management Rules require and a contingency plan for action if methane levels exceed the regulatory concentration limits. The plan for action includes the specific step by step actions needed should regulatory limits be detected.

5.1 Actions if Regulatory Limits Detected in Structures

If any structures on the landfill property measures a methane level equal to or more than 25 percent of the LEL the following actions should be taken:

- the building should be immediately evacuated
- the landfill supervisor should be immediately contacted
- all individuals in and around the structure should be ordered to immediately stop smoking
- all space heaters and similar appliances should be immediately disconnected from their power source
- all doors and windows in the structure which gave the reading should be opened to permit the methane to escape
- as a precautionary measure, the landfill operator will open doors and windows in all structures on the landfill property
- equipment used to take the readings should be tested immediately to verify it was giving accurate readings

The technician will then proceed to take readings at all methane monitoring wells at the landfill. All levels should be verified and recorded in the methane monitoring log book. This information, including the verification that the equipment is providing accurate readings, the current readings, and the levels at all monitoring locations for the previous three quarters should be provided to the County's landfill supervisor. The Buncombe County landfill supervisor will make the decision to return to business as usual; temporarily evacuate the site; or follow the plan proposed in Section 5.3.

5.2 Actions if Regulatory Limits Detected at Monitoring Wells

If any of the methane monitoring wells measure a level equal to or more than the lower explosive limit as defined by Subtitle D, the technician should:

- immediately contact the landfill supervisor
- recheck the methane levels inside the facility structures. (If levels are close to or exceed 25 percent of the lower explosive level the actions in Section 5.1 should be followed.)

Once it is verified that levels inside the buildings are safe, the technician should check and record readings at all remaining methane monitoring wells on the site.

- the equipment used to take the readings should be tested to verify it is giving accurate readings

This information, the current readings, and the levels for the previous three quarters should be provided to the Buncombe County landfill supervisor who will make the decision to: return to business as usual; temporarily evacuate the site; or, follow the plan proposed in Section 5.3.

5.3 Subtitle D Compliance Action Plan

If upon verification as described in Sections 5.1 and 5.2, the methane monitoring levels are equal to or exceed the regulatory limits as defined by Subtitle D, the following actions are proposed to both comply with Subtitle D regulations as well as protect the health and safety of the individuals at or near the landfill site.

5.3.1 Immediate Action

If methane levels exceed the specified limits, the landfill operator or the landfill supervisor will take immediate action to ensure the protection of human health and safety. This will include:

- evacuate all buildings on the site;
- open all doors and windows in buildings on the landfill site;
- notify the Buncombe County Manager Office's about the concentration levels;
- if warranted by the degree of intensity of the methane concentration, check the methane levels in structures near the landfill yet outside the facility boundary;
- if warranted by the degree of intensity of the methane concentration, evacuate the landfill area or evacuate the area adjacent to the landfill;
- notify the State Director of the Subtitle D compliance program about the reading;
- begin to identify or narrow down the source of the methane causing the readings exceeding the regulatory limits (i.e. the path that the methane is taking to the monitoring location);

- begin to identify the extent of the methane problem;
- as appropriate, begin to take corrective action to control the methane levels in building at the landfill site, at the boundaries to the landfill, and at the landfill site.

5.3.2 Actions Within Seven Days

If methane levels exceed the regulatory limits, in order to comply with Subtitle D, the County must take the following actions within seven days:

- place in the operating records of the landfill, the gas levels detected; and,
- provide a description to the approved state or federal EPA agency a description of the steps taken to protect human health.

It is also suggested that at this time, the operator begin to develop a plan which:

- describes the nature and extent of the problem and
- proposes the remedy for the problem.

5.3.3 Actions Within Sixty Days

If methane levels exceed the specified limits, the County must take the following actions within 60 days:

- implement a remediation plan for the methane gas release;
- place a copy of the plan in the operating record of the landfill;
- notify the appropriate State Director or EPA official that the plan has been implemented.

5.4 Public Relations and Information

As with any potentially dangerous situation, it is important to keep the public, public service agencies, and the media informed. False information, inaccurate information, or the lack of information concerning potential explosions at a public facility could create panic.

If the County Manager determines that a potentially dangerous situation exists, it is recommended that a one page explanation of the situation be written and distributed to all homes and businesses within a one-half mile radius of the landfill. This should be done within the first two to four hours of making the determination that a potential danger to human health and safety exists.

It is recommended that the County Manager appoint one individual to provide information to: the media; the police authorities with jurisdiction in the area; and area

medical facilities. Area hospitals and police departments may receive calls once the local media releases the story. Centralizing the flow of information will avoid conflicting information and inaccurate information. Providing detailed and honest facts about the situation being under control, is critical.

Section 6
Options for Controlling LFG

This section presents several options which may be implemented by Buncombe County should methane readings exceed regulatory levels. It is presented in this Plan to insure that the information is readily available to the County if needed.

If regular LFG monitoring demonstrates levels that exceed the regulatory limits, Subtitle D requires actions by the owner of the MSWLF, to eliminate the problem. Remedial options to eliminate the problem include controlling the migration path or controlling the release of the LFG into the environment.

6.1 Migration Control Techniques

Four techniques which can be used for controlling the migration of LFG include:

- impermeable physical barriers
- passive removal system
- active removal system
- air injection or air dikes

6.1.1 Impermeable Physical Barriers

An impermeable physical barrier, such as a landfill liner or a vertical impermeable barrier, can be installed to impede and ultimately stop the migration of LFG. This type of a barrier also helps to contain the gas thereby facilitating its collection.

6.1.2 Passive Removal System

A passive removal system generally provides a safe path of least resistance for migrating LFG to exit the landfill. Passive removal systems include open air ditches or passive venting wells installed in porous gravel trenches. These systems are designed to rely on the difference between the internal landfill pressure and the atmospheric pressure to control the migration path that the LFG takes.

6.1.3 Active Removal System

An active removal system requires the installation of a connected system of collection pipes, wells, trenches, well heads, collection headers, storage tanks, blowers, or compressors. Active removal systems include the use of a mechanized device (usually a gas compressor) to induce a vacuum in the well or trench to draw-out the LFG. Active systems include both positive and negative pressure extraction. Active systems are similar to a gas removal system for recovery projects. Installation of an active removal system may enable the gas control system to be integrated into a recovery system at a future date.

6.1.4 Air Injection

Air injection, or the creation of "air dikes" was first tried in Monterey Park, California in 1980. In this control technique air is injected into the ground and distributed through a perforated screen. This technique is used to stop the migration of the methane through very saturated soils when use of a vacuum extraction system would pull in water.

The injection of air into a landfill as a technique for controlling LFG migration is potentially dangerous and not recommended. The introduction of air or oxygen into a sanitary landfill may create a number of problems such as subsurface landfill fires. Additionally, it could affect the percentage of methane content in the LFG, making it more explosive. The introduction of air will ultimately result in only temporarily slowing the production of methane by interrupting the anaerobic condition and not provide a long term solution. It could also cause the methane to migrate to a more potentially dangerous location.

6.2 Environmental Control Techniques

In addition to controlling the migration of LFG, it is possible and may be necessary to control its negative environmental effects by controlling its release into the environment. Two methods for accomplishing this control are through its recovery and use as an energy source or by burning the LFG through flares.

6.2.1 Control through LFG Recovery Systems

Recovering LFG for use as an energy source virtually eliminates its release into the atmosphere. A LFG recovery system requires the installation of a collection system and a system to pipe the gas to a user or to a generator which can turn the gas into an energy source.

There are two common types of LFG collection system designs, vertical and horizontal. The appropriate system is based on the way the landfill was constructed to be filled, vertically with lifts, or horizontally. A horizontal collection system is best used for landfills filled in a horizontal pattern. A vertical collection system is best used in landfills designed to be filled vertically or vertically with lifts. Both systems involve installing perforated pipes surrounded by rocks or gravel. Horizontal systems install the pipes in trenches. Vertical systems install the pipes in wells or manholes. A horizontal system does not lend itself to a high vacuum recovery operation. This system is best installed as the horizontal layers are completed, before the landfill is completed. Vertical systems can be installed either when the landfill is operating or after it is closed.

While LFG recovery systems are expensive to install and operate, some income may be generated from the sell of the gas or the energy produced from the system.

6.2.2 Control through Flaring LFG

A second method of controlling the release of LFG into the environment is by destroying it by flaring it as it is released from the MSWLF. Like recovering LFG for use as an energy source, flaring LFG also requires a collection system. However, the collection system need not be as elaborate a system as is needed for gas recovery.

In order for the flares used to destroy the harmful components in LFG, they must burn the LFG for:

- an adequate period of time (.25 to five seconds);
- at an adequate temperature (300 to 500 degrees above its auto ignition temperature) to insure complete destruction of trace elements; and,
- with sufficient turbulence, (i.e. with a uniform mix of gas and air).

Four types of flares are typically used throughout the United States: open flares, enclosed flares, invisible flares, and emission control enclosed flares.

- Open Flares, also called pipe flares, function like candles. They are often used with a passive recovery system and are ignited manually. One problem typically associated with them is that they may blow out with a strong wind.
- Enclosed flares are designed to hide the flame and protect it from blowing out in a strong wind.
- Invisible flares extend 20 to 30 feet above the landfill surface and are designed to create a "flame envelope." This design may not permit an adequate gas and air mix.
- Emission control enclosed flares rise 35 to 50 feet above the landfill surface. They are designed with an air damper to control both LFG and air flow. These are the most effective in the destruction of NMOC.

Section 7
Bibliography

Clinton, Michael and Roquetta, Alex. "The Landfill Technician," Municipal Solid Waste Management Magazine, July/Aug, 1992.

EPA, Air and Energy Engineering Research Laboratory, Research Triangle Park, Landfill Gas Energy Utilization:Technical Options and Case Studies, June 1992.

EPA, Clean Air Act, Section 111, May 30 , 1991, proposed new source performance standards.

EPA, Subtitle D, Solid Waste Disposal Facility Criteria, Final Rule, October 9, 1991.

Energy Tactics, Electric Power for Landfill Gas, N.Y., N.Y., August, 1992.

GRCDA/SWANA, Publication # GR-LG 0301, Landfill Gas Management: Control, Recovery, and Utilization, Volume 2, Selected Papers from 1987 - 1990, 247 pp, published 1991.

Khalil, M.A.K. and R. A. Rasmussen. Constraints on the Global Sources of Methane and an Analysis of Recent Budgets. Tellus, 42 B 229-236, 1990.

O'Leary, Philip, Sanitary Landfill Leachate and Gas Management, Seminar Documents, December 3 - 6, 1991.

Poland, Ronald, Collection System for Landfill Gas, Recovery and Control, One Size May Not Fit All, Waste Management, Inc, Chicago, Ill. 1991.

Thorneloe, Susan, EPA, Landfill Gas Recovery, Utilization Options and Economics, Presented at the 16th Institute of Gas Technology, March 5, 1992.

Thorneloe, Susan, EPA, Global Emissions and Control, Landfill Gas Utilization, presented at the 2nd U.S. Conference on Municipal Solid Waste Management, June 3 - 5, 1992.

Thorneloe, Susan, EPA, Paper presented at the EPA Symposium on Greenhouse Gas

Emissions and Migration Research, August 18 - 20, 1992.