CEC

CARLSON ENVIRONMENTAL CONSULTANTS, PC

LANDFILL GAS, AIR PERMITTING, AND REGULATORY COMPLIANCE SERVICES

September 16, 2010

Ming-Tai Chao, P.E.
Environmental Engineer II
Permitting Branch, Solid Waste Section
Division of Waste Management
1646 Mail Service Center
Raleigh, NC 27699-1646

Subject: GCCS Expansion and LFGTE Drawing Plans
Wayne County Landfill-Dudley, NC
Title V Permit No. 08885T03
SW Permit No. 96-06

Dear Mr. Chao:

On behalf of Wayne County, North Carolina, Carlson Environmental Consultants, PC (CEC) is submitting one (1) copy each of the Landfill Gas Collection and Control System (GCCS) Expansion and the Landfill Gas-to-Energy (LFGTE) construction plan drawings for your review.

If you have any questions or require additional information please do not hesitate to contact myself at 704.283.9765.

Thank you,

Kristofer L. Carlson, P.E.
Principal
Carlson Environmental Consultants, PC

Fac/Perm/Co ID #	Date	Doc ID#
96-06 ming chao	09/20 12/10	DIN 11604

cc: Tim Rogers, Wayne County
Wayne Sullivan, Municipal Engineering
Stevia Morton, CEC

305 SOUTH MAIN STREET
MONROE, NC 28112
704.283.9765 OFFICE
704.283.9755 FAX

12715 KEY LIME BLVD
WEST PALM BEACH, FL 33412
OFFICE 863.634.7185

CONSTRUCTION DRAWINGS

LANDFILL GAS TO ENERGY PIPELINE - 2010
WAYNE COUNTY MUNICIPAL SOLID WASTE LANDFILL

OWNER:

WAYNE COUNTY, NORTH CAROLINA
WAYNE COUNTY MSW LANDFILL
460B SOUTH LANDFILL ROAD
DUDLEY, NORTH CAROLINA 28333

LFGTE DEVELOPER:

MP DEVELOPER, LLC
240 ISLAND BEACH ROAD
DRAKES ISLAND
WELLS, MAINE 04090

DEVELOPER REPRESENTATIVE:
LEO LEBLANC
(207) 604-6969

LANDFILL GAS ENGINEER:

CARLSON ENVIRONMENTAL CONSULTANTS, PC
305 SOUTH MAINSTREET
MONROE, NORTH CAROLINA 28112
(704) 283-9765

AUGUST 27, 2010

INDEX OF SHEETS

SHEET NO.	DESCRIPTION
1	TITLE SHEET
2	SITE PLAN
3	DETAILS

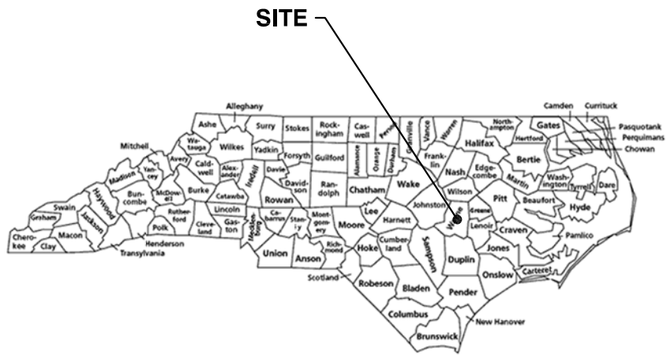

AREA MAP
SCALE: AS SHOWN

NORTH CAROLINA PROFESSIONAL SEAL 028384 ENGINEER KRISTOFER L. CARLSON 8-27-10

ISSUED FOR CONSTRUCTION

DRAWING TITLE: TITLE SHEET

PROJECT: LANDFILL GAS TO ENERGY PIPELINE - 2010
WAYNE COUNTY MUNICIPAL SOLID WASTE LANDFILL
DUDLEY, NORTH CAROLINA

CLIENT: WAYNE COUNTY, NORTH CAROLINA
MP DEVELOPER, LLC

CARLSON ENVIRONMENTAL CONSULTANTS, PC
305 SOUTH MAIN STREET
MONROE, NORTH CAROLINA 28112
NC COA# C-2533
(704) 283-9765
FAX (704) 283-9755

CEC PROJECT NO.		DWG. TITLE	REV. 0
SCALE	NO SCALE	SHEET 1 OF 3	
DATE	AUGUST 27, 2010		

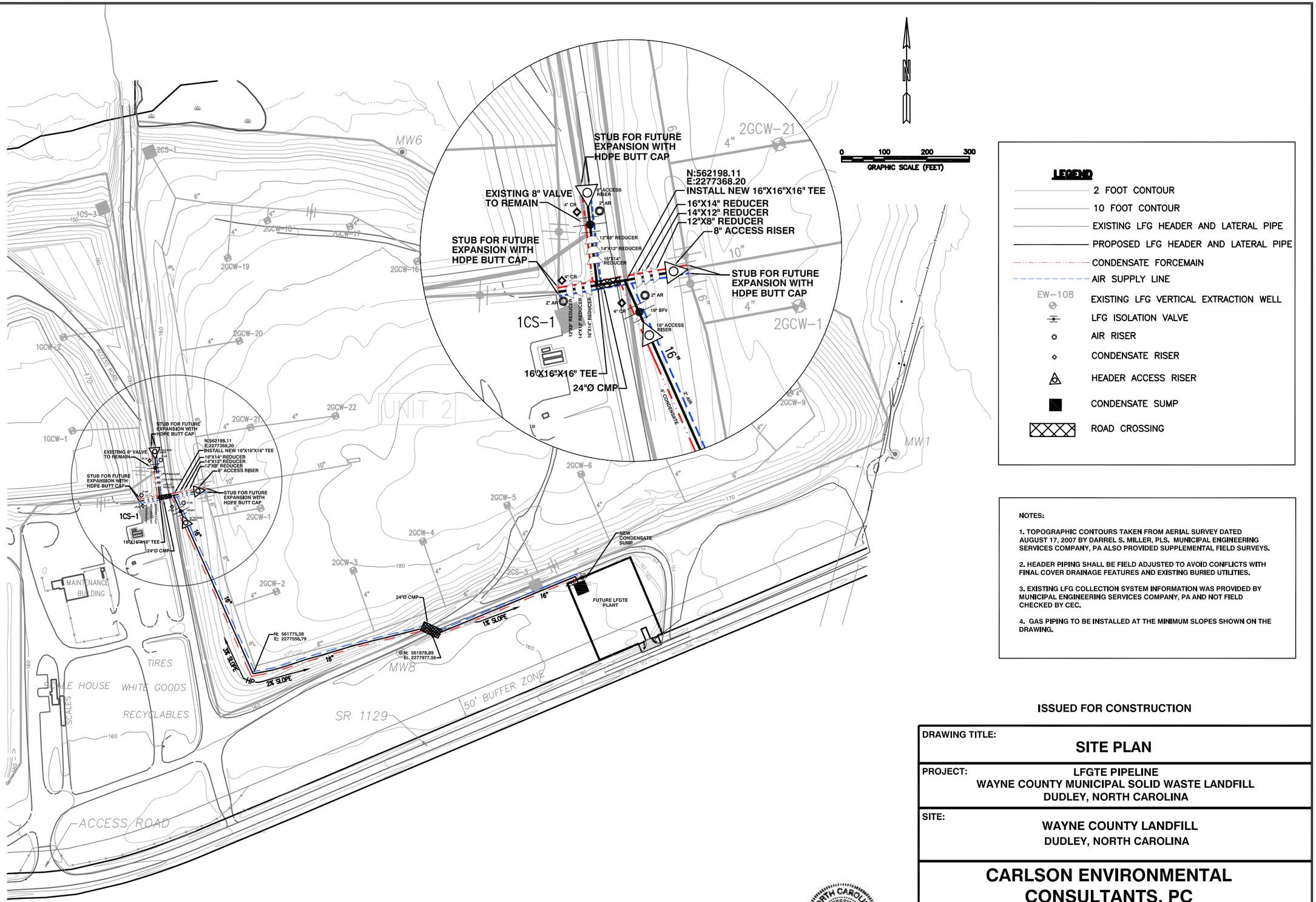

NOTES:

1. TOPOGRAPHIC CONTOURS TAKEN FROM AERIAL SURVEY DATED AUGUST 17, 2007 BY DARREL S. MILLER, PLS. MUNICIPAL ENGINEERING SERVICES COMPANY, PA ALSO PROVIDED SUPPLEMENTAL FIELD SURVEYS.
2. HEADER PIPING SHALL BE FIELD ADJUSTED TO AVOID CONFLICTS WITH FINAL COVER DRAINAGE FEATURES AND EXISTING BURIED UTILITIES.
3. EXISTING LFG COLLECTION SYSTEM INFORMATION WAS PROVIDED BY MUNICIPAL ENGINEERING SERVICES COMPANY, PA AND NOT FIELD CHECKED BY CEC.
4. GAS PIPING TO BE INSTALLED AT THE MINIMUM SLOPES SHOWN ON THE DRAWING.

ISSUED FOR CONSTRUCTION

NORTH CAROLINA PROFESSIONAL SEAL 029894 ENGINEER KRISTOPHER L. CARLSON 8-27-10

DRAWING TITLE: **SITE PLAN**

PROJECT: **LFGTE PIPELINE**
WAYNE COUNTY MUNICIPAL SOLID WASTE LANDFILL
DUDLEY, NORTH CAROLINA

SITE: **WAYNE COUNTY LANDFILL**
DUDLEY, NORTH CAROLINA

CARLSON ENVIRONMENTAL CONSULTANTS, PC
305 SOUTH MAIN STREET
MONROE, NORTH CAROLINA 28112
NC COA# C-2533
(704) 283-9765
FAX (704) 283-9755

CEC PROJECT NO.	DWG. WC.LFGTE.2010	REV. 0
SCALE 1" = 100'		
DATE AUGUST 27, 2010		

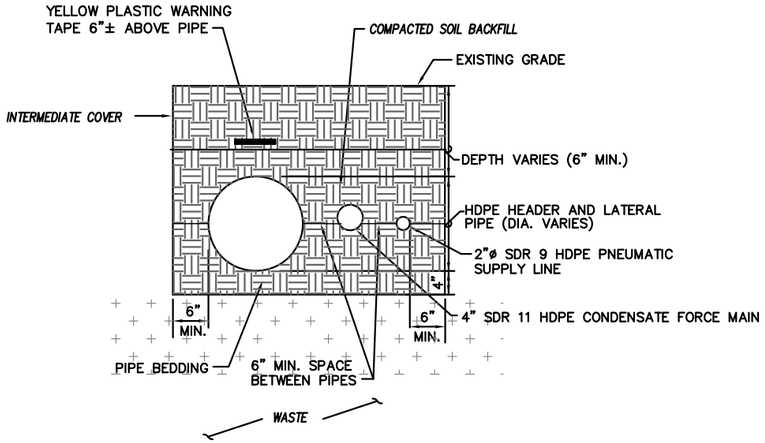

HEADER/LATERAL TRENCH DETAIL 1/3
NO SCALE

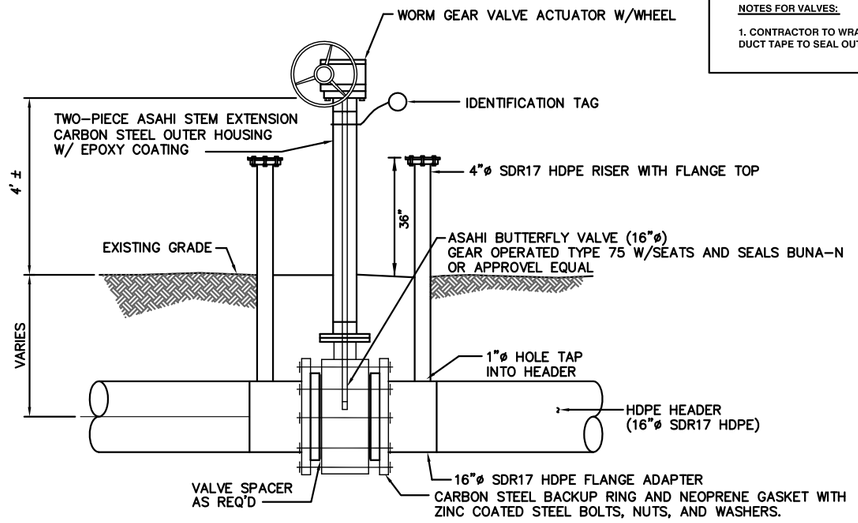

LFG COLLECTION SYSTEM BUTTERFLY VALVE DETAIL 3/3
NOT TO SCALE

NOTES FOR VALVES:

1. CONTRACTOR TO WRAP ALL BURIED VALVES IN 5-MIL PLASTIC SHEETING AND DUCT TAPE TO SEAL OUT DIRT, WATER, AND DEBRIS.

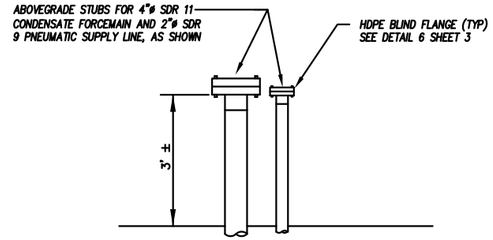

STUBS OF PNEUMATIC SUPPLY LINE AND CONDENSATE FORCEMAIN 7/3
NOT TO SCALE

AIR AND FORCEMAIN STUBBS TO BE PLACED AS SHOWN ON THE SITE PLAN - SHEET 2 OF 3

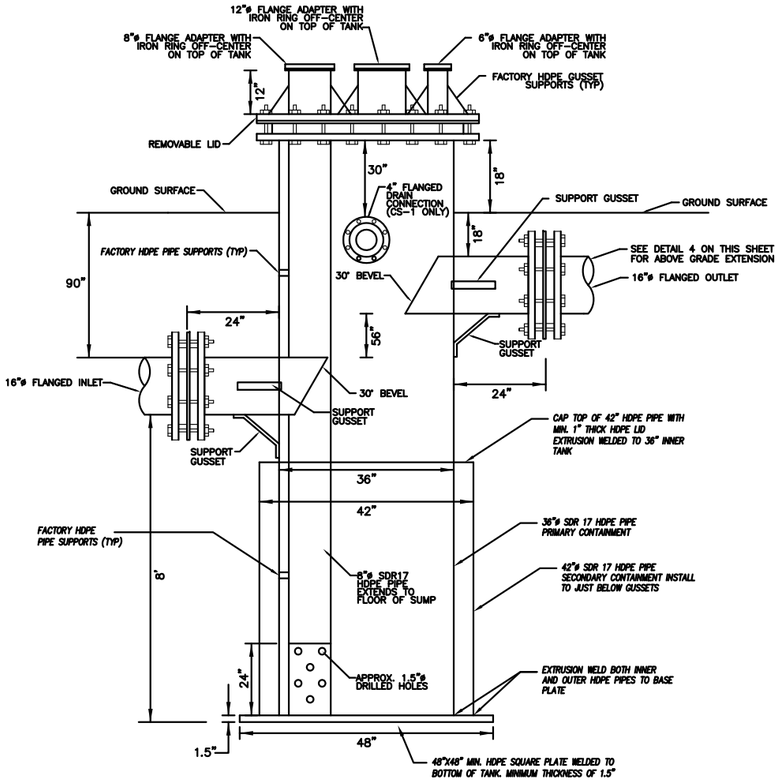

DUAL-CONTAINED CONDENSATE SUMP DETAIL 2/3
NOT TO SCALE

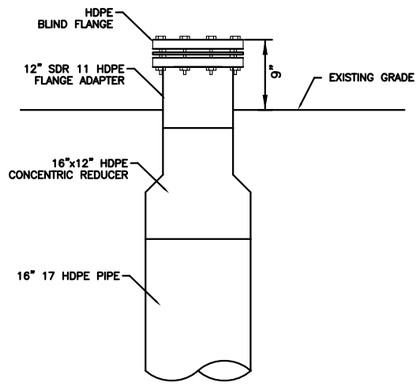

CS-1 OUTLET STUB UP 4/3
NOT TO SCALE

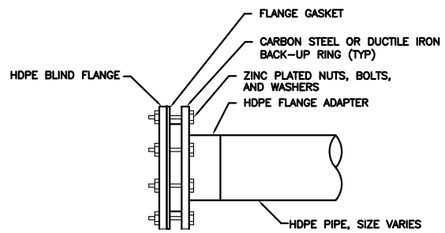

BLIND FLANGE DETAIL 5/3
NOT TO SCALE

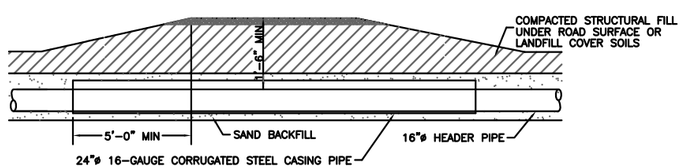

ROAD CROSSING DETAIL 6/3
NOT TO SCALE

NOTE: ALL ROAD CROSSINGS TO HAVE A MIN 2% PIPE SLOPE UNLESS OTHERWISE APPROVED BY THE ENGINEER.

NORTH CAROLINA PROFESSIONAL SEAL 029394 ENGINEER CHRISTOPHER L. CARLSON 8-27-10

ISSUED FOR CONSTRUCTION

DRAWING TITLE: **DETAILS**

PROJECT: LFGTE PIPELINE
WAYNE COUNTY MUNICIPAL SOLID WASTE LANDFILL
DUDLEY, NORTH CAROLINA

SITE: WAYNE COUNTY LANDFILL
DUDLEY, NORTH CAROLINA

CARLSON ENVIRONMENTAL CONSULTANTS, PC
305 SOUTH MAIN STREET
MONROE, NORTH CAROLINA 28112
NC COA# C-2533
(704) 283-9765
FAX (704) 283-9755

CEC PROJECT NO.	DWG. WC.DETAILS.2010	REV. 0
SCALE NO SCALE		SHEET 3 OF 3
DATE AUGUST 27, 2010		

CONSTRUCTION DRAWINGS

LANDFILL GAS COLLECTION SYSTEM EXPANSION - 2010
WAYNE COUNTY MUNICIPAL SOLID WASTE LANDFILL

OWNER:

WAYNE COUNTY, NORTH CAROLINA
WAYNE COUNTY MSW LANDFILL
460B SOUTH LANDFILL ROAD
DUDLEY, NORTH CAROLINA 28333

OWNER'S REPRESENTATIVE:
TIM RODGERS
SOLID WASTE DIRECTOR
(919) 689-2994

LFGTE DEVELOPER:

MP DEVELOPER, LLC
240 ISLAND BEACH ROAD
DRAKES ISLAND
WELLS, MAINE 04090

DEVELOPER REPRESENTATIVE:
LEO LEBLANC
(207) 604-6969

LANDFILL GAS ENGINEER:

CARLSON ENVIRONMENTAL CONSULTANTS, PC
305 SOUTH MAINSTREET
MONROE, NORTH CAROLINA 28112
(704) 283-9765

AUGUST 27, 2010

INDEX OF SHEETS

SHEET NO.	DESCRIPTION
1	TITLE SHEET
2	SITE PLAN - UNIT 1/2
3	SITE PLAN - UNIT 3
4	DETAILS
5	DETAILS
6	DETAILS

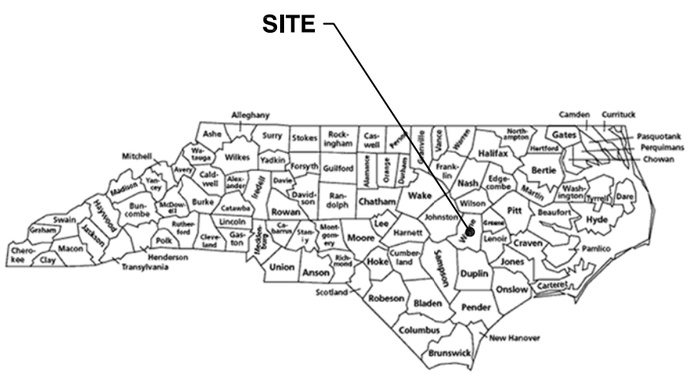

AREA MAP
SCALE: AS SHOWN

NORTH CAROLINA PROFESSIONAL SEAL 028364 ENGINEER KRISTOFER L. CARLSON
8-27-10

ISSUED FOR CONSTRUCTION

DRAWING TITLE: **TITLE SHEET**

PROJECT: **LFG COLLECTION SYSTEM EXPANSION**
WAYNE COUNTY MUNICIPAL SOLID WASTE LANDFILL
DUDLEY, NORTH CAROLINA

CLIENT: WAYNE COUNTY, NORTH CAROLINA
MP DEVELOPER, LLC

CARLSON ENVIRONMENTAL CONSULTANTS, PC
305 SOUTH MAIN STREET
MONROE, NORTH CAROLINA 28112
NC COA# C-2533
(704) 506-7312
FAX (704) 283-9755

CEC PROJECT NO.	DWG. TITLE	REV. 0
SCALE NO SCALE	SHEET 1 OF 6	
DATE AUGUST 27, 2010		

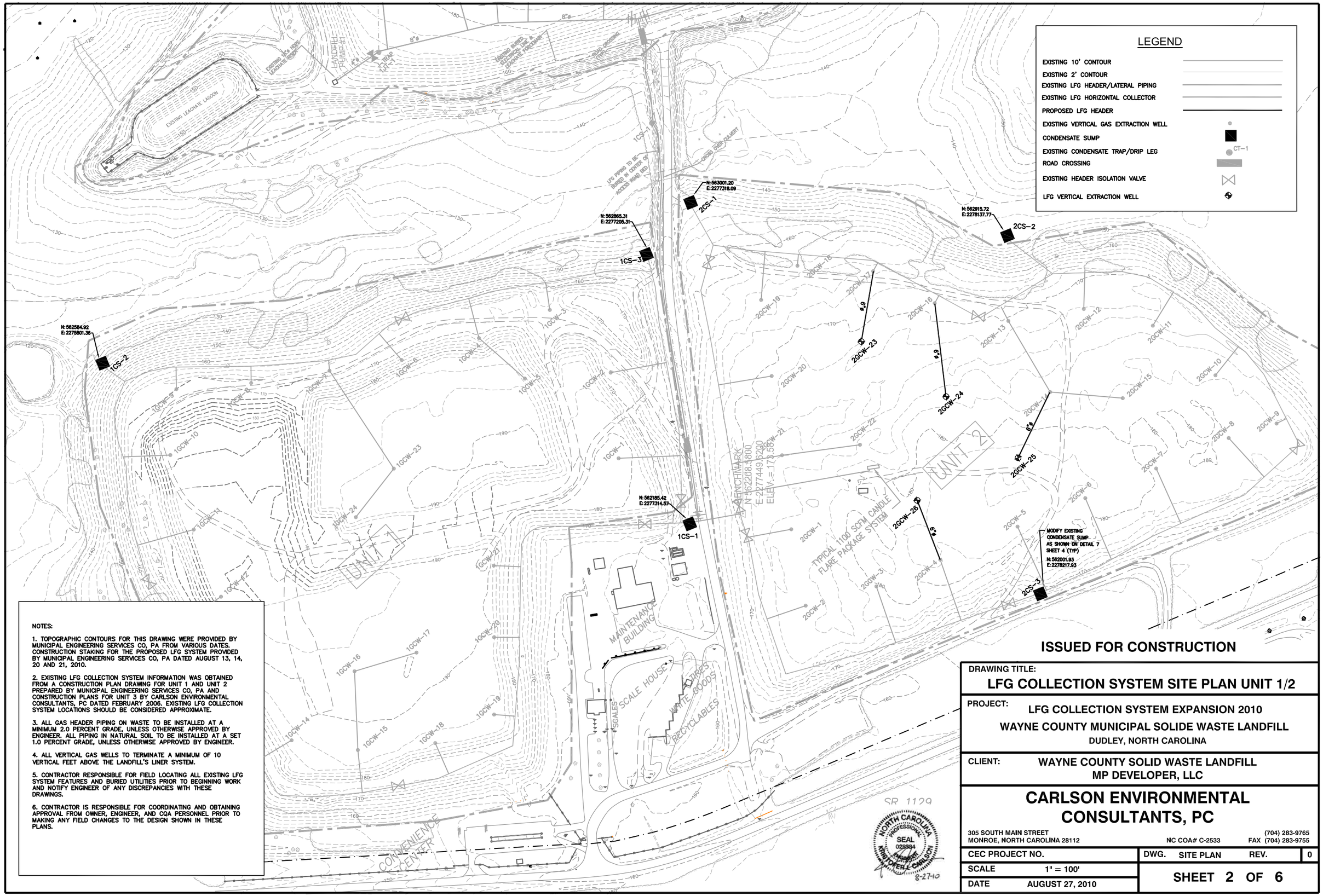

NOTES:

1. TOPOGRAPHIC CONTOURS FOR THIS DRAWING WERE PROVIDED BY MUNICIPAL ENGINEERING SERVICES CO, PA FROM VARIOUS DATES. CONSTRUCTION STAKING FOR THE PROPOSED LFG SYSTEM PROVIDED BY MUNICIPAL ENGINEERING SERVICES CO, PA DATED AUGUST 13, 14, 20 AND 21, 2010.

2. EXISTING LFG COLLECTION SYSTEM INFORMATION WAS OBTAINED FROM A CONSTRUCTION PLAN DRAWING FOR UNIT 1 AND UNIT 2 PREPARED BY MUNICIPAL ENGINEERING SERVICES CO, PA AND CONSTRUCTION PLANS FOR UNIT 3 BY CARLSON ENVIRONMENTAL CONSULTANTS, PC DATED FEBRUARY 2006. EXISTING LFG COLLECTION SYSTEM LOCATIONS SHOULD BE CONSIDERED APPROXIMATE.

3. ALL GAS HEADER PIPING ON WASTE TO BE INSTALLED AT A MINIMUM 2.0 PERCENT GRADE, UNLESS OTHERWISE APPROVED BY ENGINEER. ALL PIPING IN NATURAL SOIL TO BE INSTALLED AT A SET 1.0 PERCENT GRADE, UNLESS OTHERWISE APPROVED BY ENGINEER.

4. ALL VERTICAL GAS WELLS TO TERMINATE A MINIMUM OF 10 VERTICAL FEET ABOVE THE LANDFILL'S LINER SYSTEM.

5. CONTRACTOR RESPONSIBLE FOR FIELD LOCATING ALL EXISTING LFG SYSTEM FEATURES AND BURIED UTILITIES PRIOR TO BEGINNING WORK AND NOTIFY ENGINEER OF ANY DISCREPANCIES WITH THESE DRAWINGS.

6. CONTRACTOR IS RESPONSIBLE FOR COORDINATING AND OBTAINING APPROVAL FROM OWNER, ENGINEER, AND CQA PERSONNEL PRIOR TO MAKING ANY FIELD CHANGES TO THE DESIGN SHOWN IN THESE PLANS.

ISSUED FOR CONSTRUCTION

DRAWING TITLE:
LFG COLLECTION SYSTEM SITE PLAN UNIT 1/2

PROJECT: LFG COLLECTION SYSTEM EXPANSION 2010
WAYNE COUNTY MUNICIPAL SOLIDE WASTE LANDFILL
DUDLEY, NORTH CAROLINA

CLIENT: WAYNE COUNTY SOLID WASTE LANDFILL
MP DEVELOPER, LLC

CARLSON ENVIRONMENTAL CONSULTANTS, PC
305 SOUTH MAIN STREET
MONROE, NORTH CAROLINA 28112
NC COA# C-2533
(704) 283-9765
FAX (704) 283-9755

CEC PROJECT NO.	DWG. SITE PLAN	REV.	0
SCALE 1" = 100'	SHEET 2 OF 6		
DATE AUGUST 27, 2010			

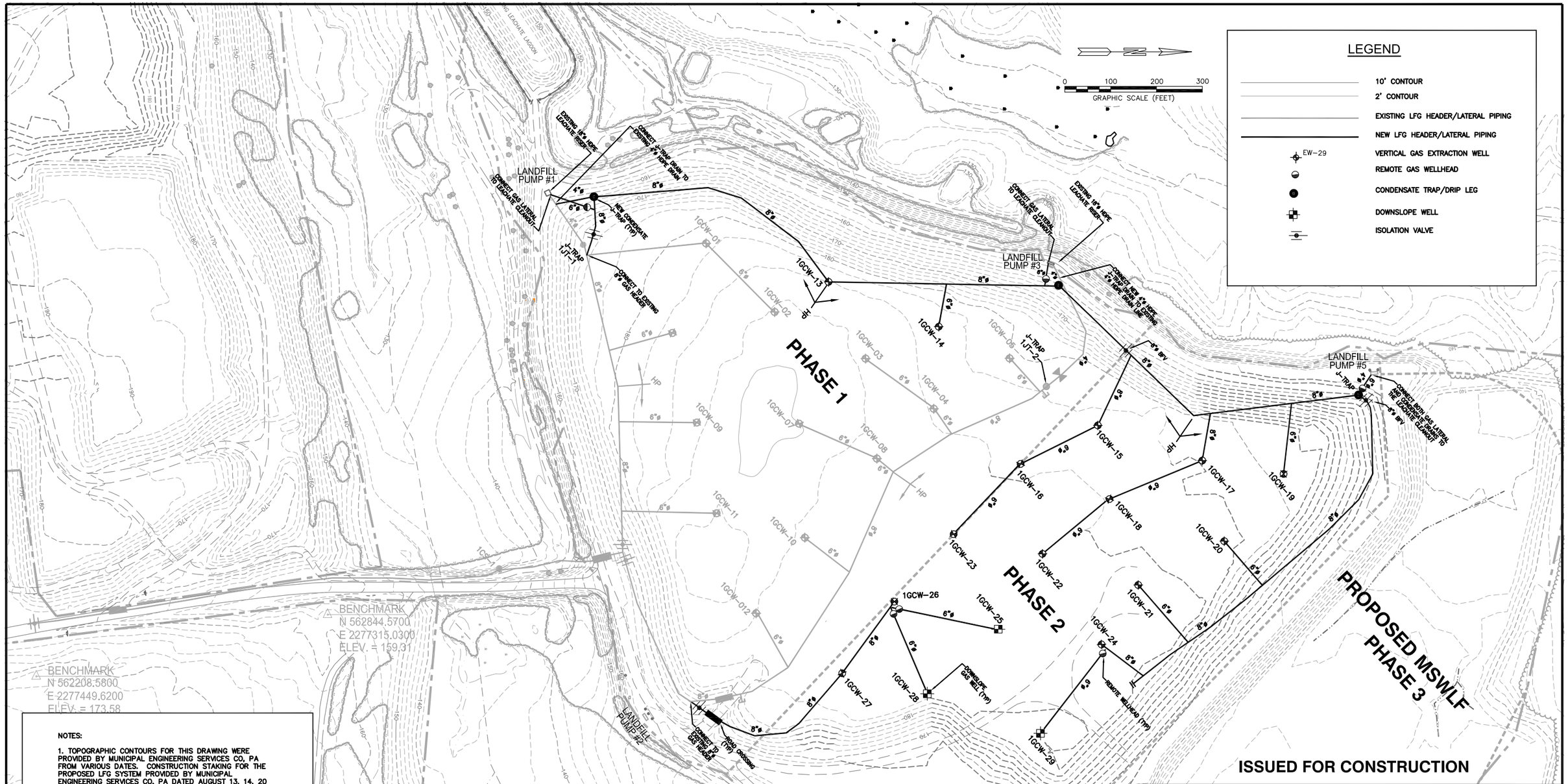

NOTES:

1. TOPOGRAPHIC CONTOURS FOR THIS DRAWING WERE PROVIDED BY MUNICIPAL ENGINEERING SERVICES CO, PA FROM VARIOUS DATES. CONSTRUCTION STAKING FOR THE PROPOSED LFG SYSTEM PROVIDED BY MUNICIPAL ENGINEERING SERVICES CO, PA DATED AUGUST 13, 14, 20 AND 21, 2010.

2. EXISTING LFG COLLECTION SYSTEM INFORMATION WAS OBTAINED FROM A CONSTRUCTION PLAN DRAWING FOR UNIT 1 AND UNIT 2 PREPARED BY MUNICIPAL ENGINEERING SERVICES CO, PA AND CONSTRUCTION PLANS FOR UNIT 3 BY CARLSON ENVIRONMENTAL CONSULTANTS, PC DATED FEBRUARY 2006. EXISTING LFG COLLECTION SYSTEM LOCATIONS SHOULD BE CONSIDERED APPROXIMATE.

3. ALL GAS HEADER PIPING ON WASTE TO BE INSTALLED AT A MINIMUM 2.0 PERCENT GRADE, UNLESS OTHERWISE APPROVED BY ENGINEER. ALL PIPING IN NATURAL SOIL TO BE INSTALLED AT A SET 1.0 PERCENT GRADE, UNLESS OTHERWISE APPROVED BY ENGINEER.

4. ALL VERTICAL GAS WELLS TO TERMINATE A MINIMUM OF 10 VERTICAL FEET ABOVE THE LANDFILL'S LINER SYSTEM.

5. CONTRACTOR RESPONSIBLE FOR FIELD LOCATING ALL EXISTING LFG SYSTEM FEATURES AND BURIED UTILITIES PRIOR TO BEGINNING WORK AND NOTIFY ENGINEER OF ANY DISCREPANCIES WITH THESE DRAWINGS.

6. CONTRACTOR IS RESPONSIBLE FOR COORDINATING AND OBTAINING APPROVAL FROM OWNER, ENGINEER, AND CQA PERSONNEL PRIOR TO MAKING ANY FIELD CHANGES TO THE DESIGN SHOWN IN THESE PLANS.

NORTH CAROLINA PROFESSIONAL SEAL 028384 ENGINEER KRISTOPHER L. CARLSON 8-27-10

ISSUED FOR CONSTRUCTION

DRAWING TITLE:
LFG COLLECTION SYSTEM SITE PLAN

PROJECT:
LFG COLLECTION SYSTEM EXPANSION 2010
WAYNE COUNTY MUNICIPAL SOLID WASTE LANDFILL
DUDLEY, NORTH CAROLINA

CLIENT:
WAYNE COUNTY SOLID WASTE LANDFILL
MP DEVELOPER, LLC

CARLSON ENVIRONMENTAL CONSULTANTS, PC
305 SOUTH MAIN STREET
MONROE, NORTH CAROLINA 28112
NC COA# C-2533
(704) 283-9765
FAX (704) 283-9755

CEC PROJECT NO.		DWG. SITE PLAN	REV. 0
SCALE	1" = 100'	SHEET 3 OF 6	
DATE	AUGUST 27, 2010		

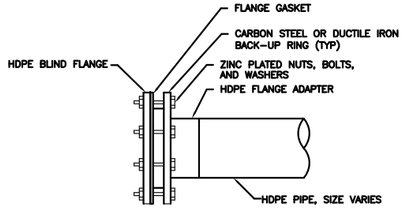

BLIND FLANGE DETAIL 2/4
NOT TO SCALE

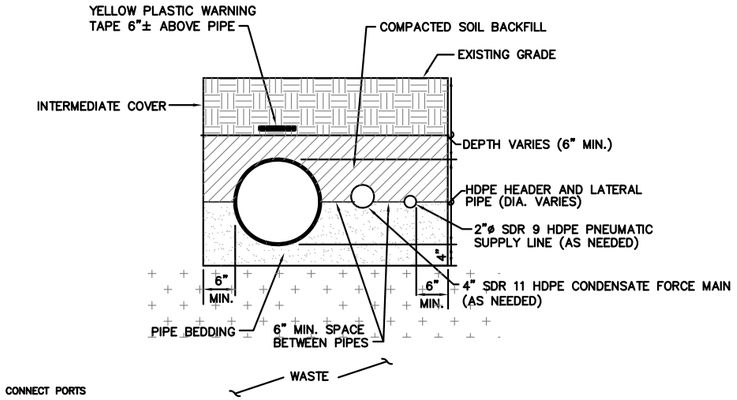

HEADER/LATERAL TRENCH DETAIL 3/4
NO SCALE

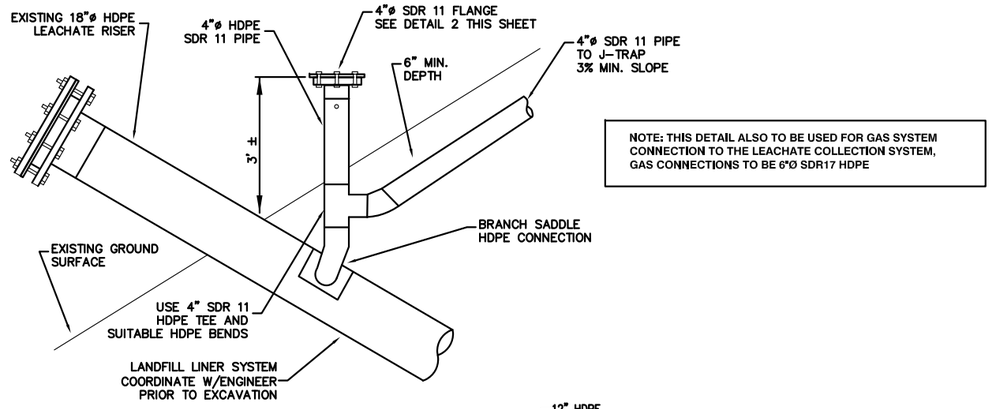

NOTE: THIS DETAIL ALSO TO BE USED FOR GAS SYSTEM CONNECTION TO THE LEACHATE COLLECTION SYSTEM, GAS CONNECTIONS TO BE 6"Ø SDR17 HDPE

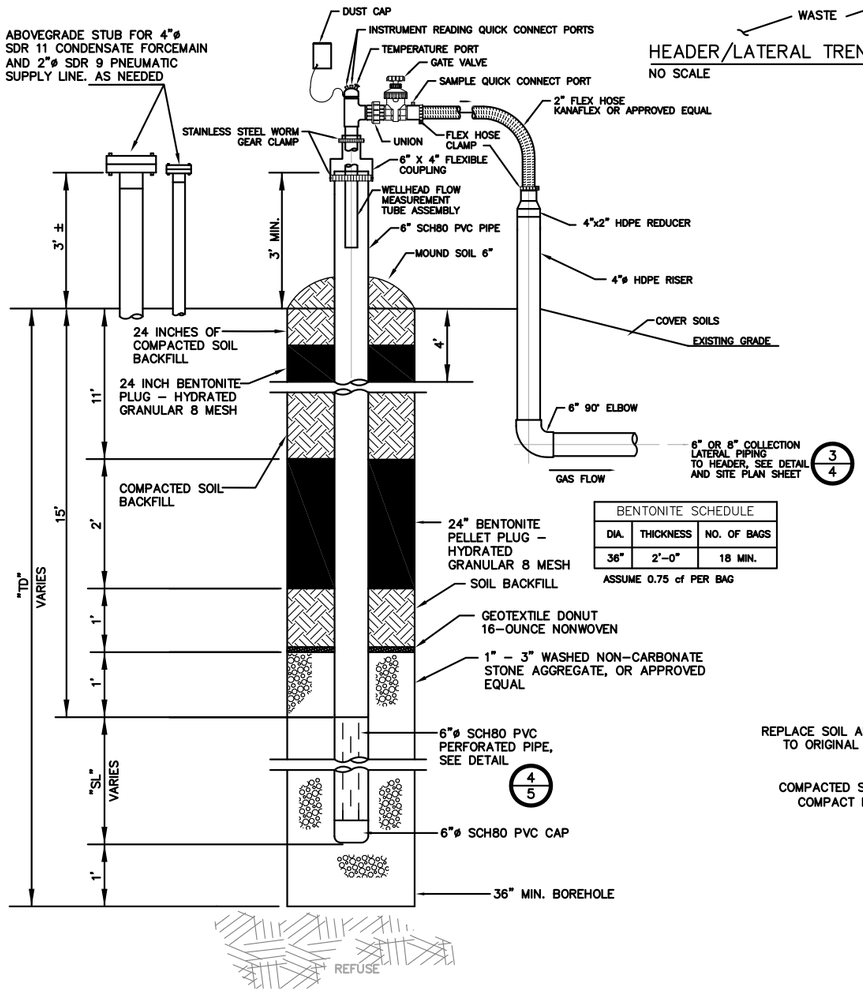

BENTONITE SCHEDULE		
DIA.	THICKNESS	NO. OF BAGS
36"	2'–0"	18 MIN.

ASSUME 0.75 cf PER BAG

VERTICAL EXTRACTION WELL DETAIL 1/4
NOT TO SCALE

NOTES:
1. WELLHEAD ASSEMBLY SHOWN REPRESENTS 2" LANDTEC ACCU-FLO MODEL AF2V WELLHEAD ASSEMBLY, TEL. 1-800-LANDTEC, FAX 213-895-5866.

WELL SCHEDULE					
WELL ID.	NORTHING	EASTING	TOTAL WELL DEPTH, "TD" (FT)	SLOTTED PIPE LENGTH, "SL" (FT)	SOLID PIPE LENGTH, "S" (FT)
1GCW–13	563937	2276589	25	9	15
1GCW–14	564178	2276687	25	9	15
1GCW–15	564525	2276902	25	9	15
1GCW–16	564356	2276986	25	9	15
1GCW–17	564753	2276978	25	9	15
1GCW–18	564550	2277062	25	9	15
1GCW–19	564930	2277008	25	9	15
1GCW–20	564801	2277154	25	9	15
1GCW–21	564613	2277250	25	9	15
1GCW–22	564404	2277182	25	9	15
1GCW–23	564210	2277138	25	9	15
1GCW–24	564533	2277379	25	9	15
1GCW–25	564306	2277348	25	9	15
1GCW–26	564081	2277286	25	9	15
1GCW–27	563967	2277443	25	9	15
1GCW–28	564153	2277487	25	9	15
1GCW–29	564400	2277574	25	9	15
2GCW–23	562653	2277755	25	9	15
2GCW–24	562511	2277974	25	9	15
2GCW–25	562352	2278161	25	9	15
2GCW–26	562242	2277900	25	9	15

CONNECTION TO LEACHATE RISER DETAIL 5/4
NOT TO SCALE

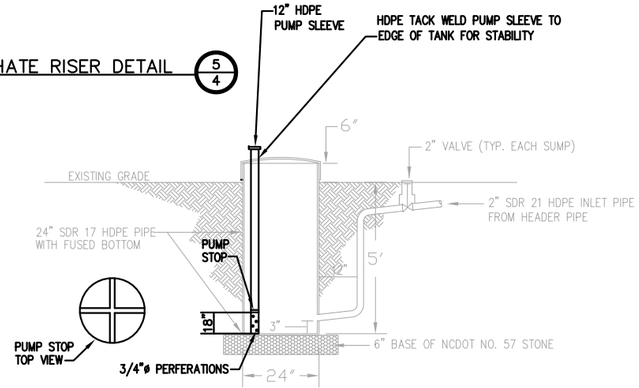

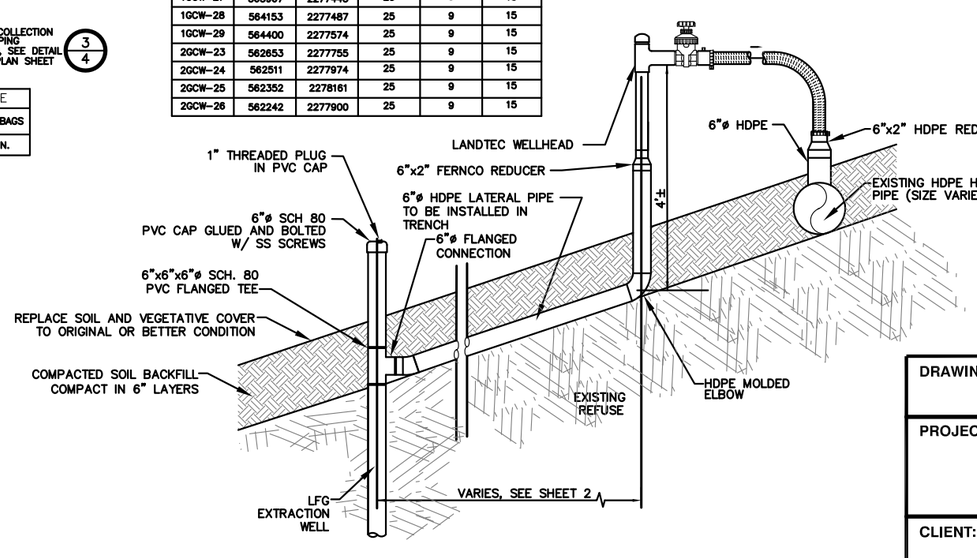

DOWNSLOPE EXTRACTION WELL DETAIL 4/4
NOT TO SCALE

NOTE: THE DEPTH OF THE TEE CONNECTION FROM THE GAS LATERAL TO THE DOWNSLOPE WELL TO BE FIELD FIT AND BASED ON THE REQUIRED PIPE SLOPE FROM THE WELLHEAD TO THE DOWNSLOPE WELL.

MODIFICATION TO EXISTING CONDENSATE SUMP DETAIL 6/4
NOT TO SCALE

ISSUED FOR CONSTRUCTION

DRAWING TITLE: DETAILS

PROJECT: LFG COLLECTION SYSTEM EXPANSION
WAYNE COUNTY MUNICIPAL SOLID WASTE LANDFILL
DUDLEY, NORTH CAROLINA

CLIENT: WAYNE COUNTY, NORTH CAROLINA
MP DEVELOPER, LLC

CARLSON ENVIRONMENTAL CONSULTANTS, PC
305 SOUTH MAIN STREET
MONROE, NORTH CAROLINA 28112
NC COA# C-2533
(704) 283-9765
FAX (704) 283-9755

CEC PROJECT NO.		DWG. WAYNE.DETAILS	REV. 0
SCALE	NO SCALE	SHEET 4 OF 6	
DATE	AUGUST 27, 2010		

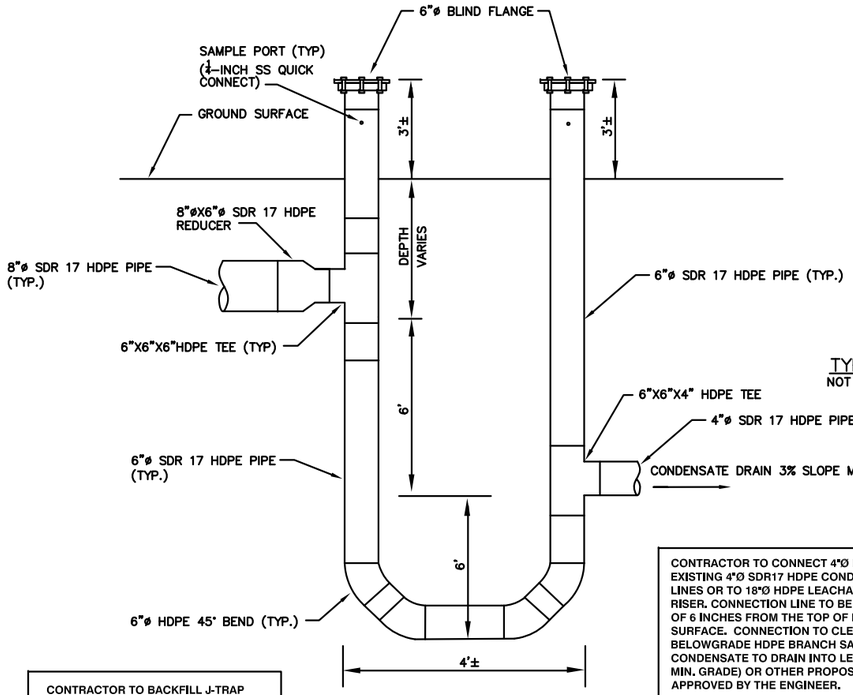

CONTRACTOR TO BACKFILL J-TRAP WITH CLEAN SOILS. COMPACT TO ACHIEVE A STABLE BURIAL. CONTRACTOR TO FILL J-TRAP WITH CLEAN WATER PRIOR TO SUBSTANTIAL COMPLETION.

CONDENSATE J–TRAP 1/5
NOT TO SCALE

CONTRACTOR TO CONNECT 4"Ø DRAIN LINE TO EXISTING 4"Ø SDR17 HDPE CONDENSATE DRAIN LINES OR TO 18"Ø HDPE LEACHATE PUMP STATION RISER. CONNECTION LINE TO BE BURIED A MINIMUM OF 6 INCHES FROM THE TOP OF PIPE TO GROUND SURFACE. CONNECTION TO CLEANOUT TO BE A BELOWGRADE HDPE BRANCH SADDLE TO ALLOW CONDENSATE TO DRAIN INTO LEACHATE RISER (3% MIN. GRADE) OR OTHER PROPOSED CONNECTION AS APPROVED BY THE ENGINEER.

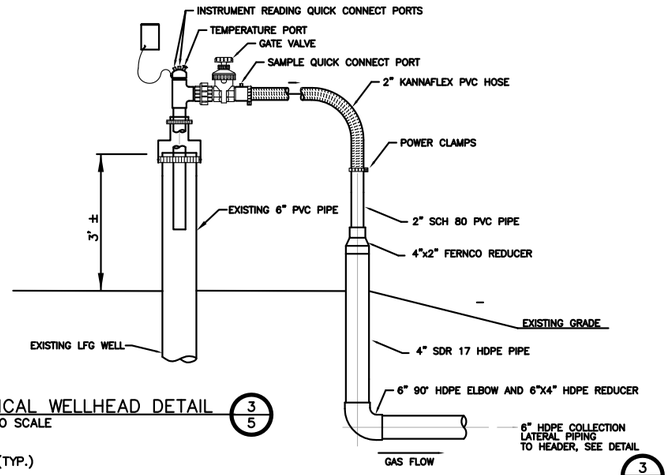

TYPICAL WELLHEAD DETAIL 3/5
NOT TO SCALE

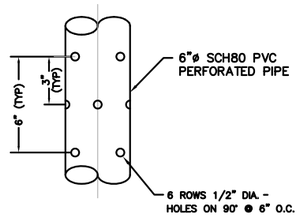

PERFORATED PIPE FOR EXTRACTION WELLS DETAIL 4/5
NOT TO SCALE

NOTES

1. UNLESS OTHERWISE AGREED TO BY OWNER, CONTRACTOR SHALL PROVIDE ALL MATERIALS, LABOR, EQUIPMENT, AND INCIDENTALS TO PERFORM THE WORK DESCRIBED ON THESE DRAWINGS.

2. PRIOR TO DRILLING, CONTRACTOR TO VERIFY WELL LOCATIONS, LANDFILL SURFACE GRADES, AND TOTAL WELL DEPTHS WITH OWNER. ALL WELL DRILLING MUST REMAIN A MINIMUM OF TEN FEET ABOVE THE LANDFILL LINER SYSTEM.

3. UNLESS OTHERWISE DIRECTED BY OWNER, CONTRACTOR SHALL HAUL AND DISPOSE OF ALL WASTE MATERIALS AT THE LANDFILL'S WORKING FACE INCLUDING MUNICIPAL SOLID WASTE EXCAVATED DURING THE INSTALLATION OF THE VERTICAL WELLS AND LFG HEADER PIPE.

4. ALL BOLTS, NUTS AND WASHERS SHALL BE ZINC COATED STEEL. IF A FLANGE OR A VALVE IS USED AND IT IS BURIED, THE FLANGE AND/OR VALVE MUST BE WRAPPED WITH A 5-MIL PLASTIC SHEETING.

5. CONTRACTOR SHALL PROVIDE TO OWNER AS-BUILT DRAWINGS INCLUDING DETAILED SURVEY OF THE INSTALLED VERTICAL WELLS, CONDENSATE TRAPS, VALVES AND LFG HEADER PIPE.

6. CONTRACTOR SHALL USE FACTORY MOLDED TEE AND REDUCERS FOR CONNECTIONS. BRANCH SADDLE CONNECTIONS ARE NOT TO BE USED, UNLESS OTHERWISE APPROVED BY OWNER.

7. CONTRACTOR TO USE FACTORY PERFORATED PIPE FOR VERTICAL WELLS, UNLESS OTHERWISE APPROVED BY OWNER.

8. CONTRACTOR RESPONSIBLE FOR DAMAGES INCURRED TO LANDFILL COVER SYSTEM DURING HIS CONSTRUCTION ACTIVITIES. CONTRACTOR SHALL RETURN LANDFILL COVER SYSTEM TO ORGINIAL CONDITION AND/OR TO THE SATISFACTION OF OWNER.

9. OWNER WILL CONTRACT WITH A THRID PARTY FOR CONSTRUCTION QUALITY ASSURANCE (CQA) SERVICES. CONTRACTOR SHALL ALLOW (AND PROVIDE ADVANCE NOTIFICATION) FOR CQA PERSONNEL TO OBSERVE (AND TEST IF NECESSARY) ALL WORK PRIOR TO BURIAL.

10. CONTRACTOR TO PRESSURE TEST ALL SOLID WALL HDPE HEADER AND LATERAL LINES AT A MINIMUM PRESSURE OF 5 PSI FOR AT LEAST 1 HOUR WITH LESS THAN 1 PERCENT PRESSURE DROP, CONDENSATE FORCEMAIN AT A MINIMUM PRESSURE OF 50 PSI FOR AT LEAST 1 HOUR WITH LESS THAN 1 PERCENT PRESSURE AND AIR SUPPLY LINE AT A MINIMUM PRESSURE OF 100 PSI FOR AT LEAST 1 HOUR WITH LESS THAN 1 PERCENT PRESSURE DROP. ALL PRESSURE TESTING TO BE CORRECTED FOR TEMPERATURE OR OTHERWISE TO WAYNE COUNTY SPECIFICATIONS. CONTRACTOR TO PROVIDE CERTIFIED PRESSURE TEST REPORTS TO OWNER.

11. CONTRACTOR IS SOLELY RESPONSIBLE FOR THE HEALTH AND SAFETY OF HIS EMPLOYEES AND SUBCONTRACTORS. CONTRACTOR TO PROVIDE SERVICES IN ACCORDANCE WITH APPLICABLE OSHA, FEDERAL, STATE, AND LOCAL HEALTH AND SAFETY REGULATIONS. CONTRACTOR IS ASSUMED TO BE EXPERIENCED IN WORKING WITH LANDFILL GAS AND IN A POTENTIALLY HAZARDOUS LANDFILL ENVIRONMENT. CONTRACTOR TO PROVIDE FOUR (4) COPIES OF A SITE-SPECIFC HEALTH AND SAFETY PLAN TO THE WAYNE COUNTY LANDFILL PRIOR TO BEGINNING WORK. CONTRACTOR TO NOTIFY THE WAYNE COUNTY LANDFILL OF ANY UNSAFE CONDITIONS DURING CONSTRUCTION. CONTRACTOR IS MADE AWARE THAT HYDROGEN SULFIDE GAS MAY BE PRESENT IN THE LANDFILL GAS. CONTRACTOR TO HAVE A PORTIBLE HYDROGEN SULFIDE METER PRESENT DURING ALL WELL DRILLING AND IN-TRENCH WORK.

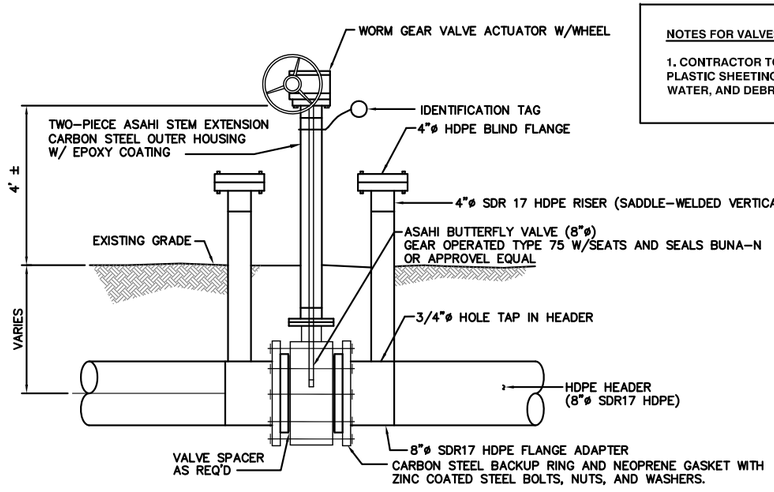

NOTES FOR VALVES:

1. CONTRACTOR TO WRAP ALL BURIED VALVES IN 5-MIL PLASTIC SHEETING AND DUCT TAPE TO SEAL OUT DIRT, WATER, AND DEBRIS.

LFG COLLECTION SYSTEM BUTTERFLY VALVE DETAIL 2/5
NOT TO SCALE

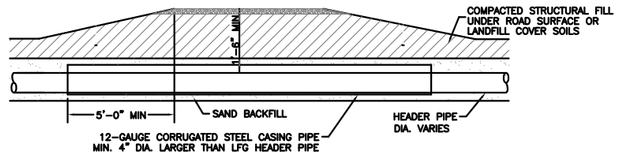

ROAD CROSSING DETAIL 5/5
NOT TO SCALE

NOTE: ALL ROAD CROSSINGS TO HAVE A 3% PIPE SLOPE UNLESS OTHERWISE APPROVED BY THE ENGINEER

NORTH CAROLINA PROFESSIONAL SEAL 028364 ENGINEER KRISTOPHER L. CARLSON
8-27-10

ISSUED FOR CONSTRUCTION

DRAWING TITLE: **DETAILS**

PROJECT: **LFG COLLECTION SYSTEM EXPANSION**
WAYNE COUNTY MUNICIPAL SOLID WASTE LANDFILL
DUDLEY, NORTH CAROLINA

CLIENT: WAYNE COUNTY, NORTH CAROLINA

CARLSON ENVIRONMENTAL CONSULTANTS, PC
305 SOUTH MAIN STREET
MONROE, NORTH CAROLINA 28112
NC COA# C-2533
(704) 283-9765
FAX (704) 283-9755

CEC PROJECT NO.		DWG. WAYNE.DETAILS	REV. 0
SCALE	NO SCALE	SHEET 5 OF 6	
DATE	AUGUST 27, 2010		

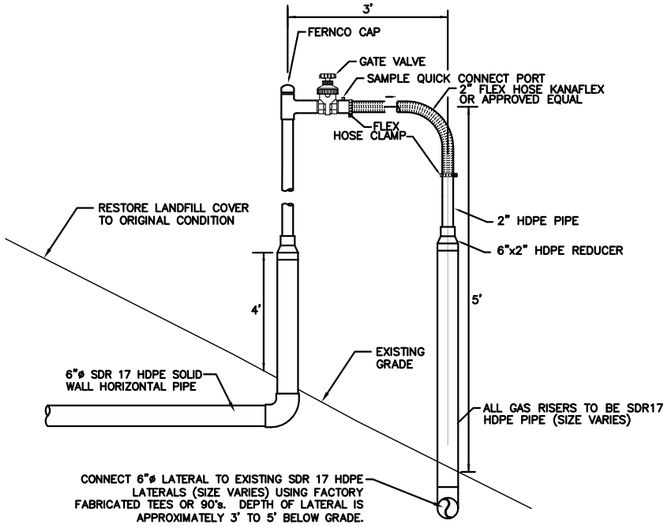

HORIZONTAL COLLECTOR CONNECTION DETAIL 1/6
NO SCALE

NOTES FOR HORIZONTAL COLLECTOR CONNECTIONS:

1. FOR CONNECTION TO THE LATERALS, USE FULL-SIZE FACTORY FABRICATED TEES AND 90's.

NOTES FOR HORIZONTAL COLLECTORS:

1. CONTRACTOR TO SLOPE ALL PIPE TO DRAIN TO THE CENTER OF THE LANDFILL CELL AT APPROXIMATE 0.5% SLOPE (MIN).

2. AT CENTER LOW POINT AND AT SOLID PIPE/PERFORATED PIPE TRANSITION, CONTRACTOR TO INSTALL DRAINAGE SUMP CONSISTING OF MIN. 5' DEEP BY 4' DIA. HOLE BACKFILLED WITH AGGREGATE INTO WASTE FOR CONDENSATE DRAINAGE.

3. DAYLIGHT HORIZONTALS USING A 6" 90° SDR17 HDPE FITTING AND EXTENDING ABOVE GRADE FOR CONNECTION OF WELLHEAD.

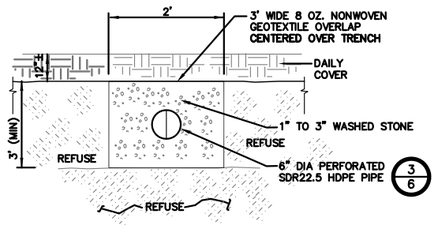

HORIZONTAL COLLECTOR SECTION A 2/6
NO SCALE

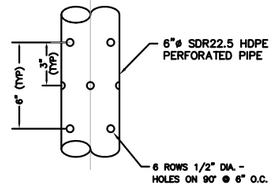

PERFORATED PIPE FOR HORIZONTAL COLLECTOR DETAIL 3/6
NOT TO SCALE

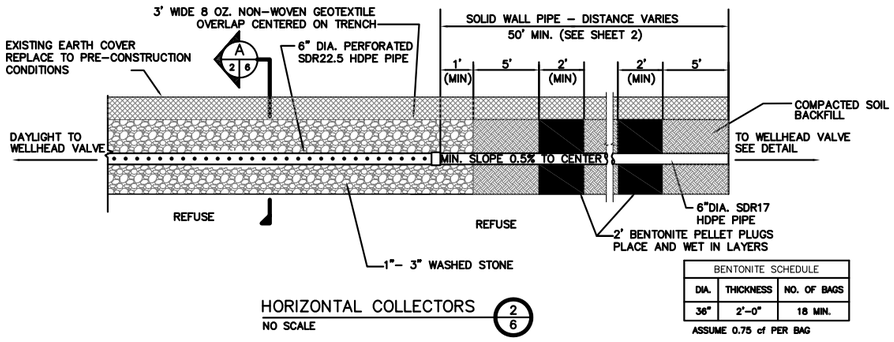

BENTONITE SCHEDULE		
DIA.	THICKNESS	NO. OF BAGS
36"	2'-0"	18 MIN.

ASSUME 0.75 cf PER BAG

HORIZONTAL COLLECTORS 2/6
NO SCALE

ISSUED FOR CONSTRUCTION

DRAWING TITLE: **DETAILS**

PROJECT: **LFG COLLECTION SYSTEM EXPANSION**
WAYNE COUNTY MUNICIPAL SOLID WASTE LANDFILL
DUDLEY, NORTH CAROLINA

CLIENT: **WAYNE COUNTY, NORTH CAROLINA**

CARLSON ENVIRONMENTAL CONSULTANTS, PC
305 SOUTH MAIN STREET
MONROE, NORTH CAROLINA 28112
NC COA# C-2533
(704) 283-9765
FAX (704) 283-9755

CEC PROJECT NO.		DWG. WAYNE.DETAILS	REV. 0
SCALE	NO SCALE	SHEET 6 OF 6	
DATE	AUGUST 27, 2010		