Permit No.	Scan Date	DIN
8503	October 5, 2011	15262

RECEIVED
October 4, 2011
Solid Waste Section
Asheville Regional Office

October 4, 2011

North Carolina Department of Environment and Natural Resources
Division of Waste Management – Solid Waste Section
2090 U.S. Highway 70
Swannanoa, North Carolina 28778

Attention: Mr. Larry Frost

Reference: **Pine Hall Road Ash Landfill Closure (Permit No. 85-03)**
Cover System Retrofit – Construction Documentation Report
Duke Energy – Belews Creek Steam Station
Belews Creek, North Carolina
S&ME Project No. 1356-07-017, Phase 05
S&ME Engineering License No. F-0176

Dear Mr. Frost:

S&ME, Inc. is pleased to present the attached Construction Documentation Report for the cover system retrofit of the Pine Hall Road Ash Landfill Closure at Duke Energy's Belews Creek Steam Station in Belews Creek, North Carolina. Presented herein is the Construction Documentation Report, which consists of:

- An introduction that includes a project background and description;
- A description of the cover system retrofit including cover system perimeter retrofit, down drain retrofit, and channel grading;
- Project documents including drawings, specifications, a Notice of Change, submittals, and an as-built drawing;
- Project documentation including meeting summaries, field reports, and construction photographs; and
- CQA documentation including field density test results, soils laboratory test results, and geosynthetics CQA forms.

Project documentation and CQA documentation indicate that the cover system retrofit was completed in general accordance with the drawings and specifications.

Upon reviewing the attached documentation, if you should have any questions or require additional information, please contact us.

Sincerely,

S&ME, Inc.

Kyle Baucom, E.I.
Staff Professional

Kenneth R. Daly, P.E.
Senior Project Engineer

Senior Reviewed by: Jack J. Amar, P.E.
Senior Vice President

Cc: Kim Benson, Duke Energy
Ed Sullivan, Duke Energy

Attachments: Construction Documentation Report

CONSTRUCTION DOCUMENTATION REPORT
PINE HALL ROAD ASH LANDFILL CLOSURE
COVER SYSTEM RETROFIT
DUKE ENERGY - BELEWS CREEK STEAM STATION
BELEWS CREEK, NORTH CAROLINA

S&ME Project No. 1356-07-017 Ph. 5

Prepared for:

Belews Creek Steam Station
Duke Energy Carolinas, LLC
3195 Pine Hall Road
Belews Creek, North Carolina 27009

Prepared by:

S&ME, Inc.

9751 Southern Pine Boulevard
Charlotte, North Carolina 28273
S&ME Engineering License No. F-0176

October 4, 2011

TABLE OF CONTENTS

1.0 INTRODUCTION 1
1.1 BACKGROUND 1
1.2 PROJECT DESCRIPTION 1
2.0 COVER SYSTEM PERIMETER – TYPE 1 2
2.1 PERIMETER DRAIN 2
2.2 PERIMETER DRAIN OUTLETS 2
2.3 SOIL COVER 3
3.0 COVER SYSTEM PERIMETER – TYPE 2 3
3.1 Restored Subgrade 3
3.2 Geosynthetics Installation 3
3.2.1 Geomembrane 4
3.2.2 Geocomposite 5
3.3 PERIMETER DRAIN & SOIL COVER 5
4.0 DRAINAGE ENHANCEMENTS 6
4.1 Down Drain Retrofit 6
4.2.1 Pipe Replacement 6
4.2.2 Seepage Diaphragm Installation 6
4.2 Channel Grading 6

APPENDIX I – PROJECT DOCUMENTS
Issued for Construction Drawings
Issued for Construction Specifications
Notice of Change
Submittals
As-Built Drawing

APPENDIX II – PROJECT DOCUMENTATION
Meeting Summaries
Field Reports
Construction Photographs

APPENDIX III – CONSTRUCTION QUALITY ASSURANCE (CQA) DOCUMENTATION
Field Density Test Results
Soils Laboratory Test Results
Geosynthetics Construction Quality Assurance (CQA) Forms

1.0 INTRODUCTION

1.1 Background

The Pine Hall Road Ash Landfill (Permit No. 85-03) is a landfill facility owned and operated by Duke Energy. The landfill facility is located near the Belews Creek Steam Station in Belews Creek, North Carolina. From April 2008 to December 2008, a cover system was installed and constructed to close the landfill. The landfill closure area encompassed approximately 37.9 acres. The cover system consisted of, from bottom to top, 40 mil linear low density polyethylene (LLDPE) geomembrane, geocomposite, 18 inch thick compacted soil cover, and 6 inch thick vegetative soil cover.

In November 2009, Duke Energy personnel observed settlement of the landfill cover in the vicinity of the landfill perimeter at several locations as well as two ash/soil boils that had emerged at the landfill perimeter. Visual observations indicated that material was transported from underneath the cover system geosynthetics and emerged at the boil locations.

S&ME developed a cover system retrofit design. The cover system retrofit is described in more detail in the next section. This Construction Documentation Report documents the construction of the cover system retrofit.

1.2 Project Description

The Pine Hall Road Ash Landfill closure cover system retrofit consisted of modifying portions of the cover system perimeter, modifying an existing down drain, and restoring channel grades at select locations. Modifications to the cover system perimeter were referenced as Type 1 or Type 2 retrofit in the project documents. These cover system perimeter retrofits are discussed in further detail in Sections 2 and 3. The down drain retrofit and channel grading are discussed in further detail in Section 4. The cover system retrofit is also illustrated in the Issued for Construction drawings and the as-built drawing provided in Appendix I.

The cover system retrofit construction occurred in June and July 2011 with the retrofit work primarily being focused on the northwest and northeast perimeters. There were two stockpile areas and a borrow area associated with the cover system retrofit construction. Construction activities within the stockpile areas generally consisted of installing erosion and sediment control measures and stockpiling stone and excavated soil cover. Construction activities within the borrow area generally consisted of installing erosion and sediment control measures, excavating soil suitable for use as restored subgrade and soil cover, grading for drainage, and seeding.

Earnhardt Grading, Inc. performed earthworks construction for the cover system retrofit. Earthworks construction activities generally consisted of excavation and placement of subgrade and soil cover, as well as excavation and placement to restore channel grades. Earnhardt Grading, Inc. also performed perimeter drain and perimeter drain outlet installation. Plastic Fusion Fabricators, Inc. performed geosynthetics installation and pipe fabrication for the down drain retrofit.

Project documents, project documentation, and construction quality assurance (CQA) documentation are provided in the Appendices. The Appendices are organized into the following sections:

- Appendix I – Project documents including Issued for Construction drawings, Issued for Construction specifications, Notice of Change, submittals, and an as-built drawing;
- Appendix II – Project documentation including meeting summaries, field reports, and construction photographs; and
- Appendix III – CQA documentation including field density test results, soils laboratory test results, and geosynthetics CQA forms.

Project documentation and CQA documentation indicate that the cover system retrofit was completed in general accordance with the drawings and specifications. A Construction Certification Statement signed and sealed by the Engineer of Record for design and construction, a registered Professional Engineer in the State of North Carolina, is included as an upfront document in this report.

2.0 COVER SYSTEM PERIMETER – TYPE 1

Cover system retrofit primarily consisted of modifying the cover system perimeter. The cover system perimeter retrofit was defined as either Type 1 or Type 2 retrofit. Approximately 1,600 feet of the 2,100 feet of cover system perimeter retrofit was Type 1 retrofit. Type 1 retrofit was performed on both the northwest perimeter and a portion of the northeast perimeter in areas where little to no settlement was observed. In the areas of observed settlement, if there was a positive slope in the geosynthetics and subgrade support was adequate, the geosynthetics remained in place and the design grade was restored by placing additional soil cover over the geosynthetics. Type 1 retrofit consisted of excavating soil cover, installing perimeter drain and/or perimeter drain outlets, and re-placing soil cover. These activities are discussed in further detail in Sections 2.1 through 2.3.

2.1 Perimeter Drain

The perimeter drain consists of a 6 inch diameter corrugated, perforated high density polyethylene (HDPE) pipe surrounded by a NCDOT #57 stone drainage media. The stone drainage media is approximately 18 inches wide by 24 inches tall, and it is surrounded by a 10 ounce per square yard non woven geotextile filter.

The perimeter drain was installed at the cover system limits where the geosynthetics perimeter trench was previously located. During installation of the perimeter drain, the geomembrane was removed in the area of the geosynthetics perimeter trench. Additionally, the geocomposite was extended approximately 12 inches into the perimeter drain stone drainage media.

2.2 Perimeter Drain Outlets

The purpose of the perimeter drain outlet installation is to collect water from the

northwest and northeast perimeter drains and convey it to the active ash basin. The perimeter drain outlets consist of 6 inch and 8 inch diameter corrugated HDPE pipes, a precast concrete junction box with an aluminum grating, and a riprap apron outlet at the discharge point.

Two perimeter drain outlets were installed for the cover system retrofit. These outlets were installed in the proximity of the two aforementioned boil locations. One outlet consists of two 6 inch diameter inlet pipes and an 8 inch diameter outlet pipe, while the other outlet consists of one 6 inch diameter inlet pipe and an 8 inch diameter outlet pipe.

2.3 Soil Cover

Following the installation of the perimeter drain during Type 1 retrofit, soil cover was placed to restore design grades. These areas were then seeded and stabilized with erosion and sediment control matting. Wattles were also installed in Channel C1 on the northwest perimeter of Type 1 retrofit.

3.0 COVER SYSTEM PERIMETER – TYPE 2

The remaining portion of perimeter drain installation was Type 2 retrofit. Approximately 500 feet of the 2,100 feet of cover system perimeter retrofit was Type 2 retrofit. Type 2 retrofit was performed on a portion of the northeast perimeter in areas where more significant settlement was observed at the perimeter. Type 2 retrofit consisted of excavating soil cover, removing geosynthetics, restoring subgrade, installing geosynthetics, installing perimeter drain, and re-placing soil cover. These activities are discussed in further detail in Sections 3.1 through 3.3.

3.1 Restored Subgrade

As mentioned previously, Type 2 retrofit was performed in areas where more significant settlement was observed and where positive drainage (downhill slope) of the geosynthetics was affected. In these areas, the slopes were laid back and the subgrade was graded, so as to begin subgrade restoration with a relatively level working surface. Excavated soil cover and borrow area soil was placed to restore the original cover system subgrade design grades. This material was spread, tracked, and compacted with a Caterpillar D5 dozer and a Caterpillar 730 off road truck. During subgrade restoration, S&ME personnel performed CQA monitoring and performed field and laboratory testing. Observations and CQA test results indicate that the project specifications were met. Observations are documented in field reports and construction photographs included in Appendix II. Field and laboratory test results are included in Appendix III.

3.2 Geosynthetics Installation

Prior to subgrade restoration in the Type 2 retrofit area, the existing cover system geosynthetics were removed to allow for construction in this area. Following subgrade restoration, the geomembrane and geocomposite were replaced.

Geosynthetics manufacturer quality control (MQC) testing and conformance testing were conducted prior to geosynthetics installation to verify material conformance with the project requirements. MQC test samples were collected at the manufacturing plant and

tested in accordance with the approved plans and specifications. The MQC testing results and material certifications for geomembrane and geocomposite are included in the attached submittals in Appendix I. Review of the MQC test results indicates that the geosynthetic material properties satisfy the project requirements.

3.2.1 Geomembrane

Prior to the placement of geomembrane, S&ME personnel and the Geosynthetic Installer's superintendent observed the condition of the subgrade. The subgrade was smoothed out utilizing a skid steer, and it was observed to monitor that it was smooth and free of unacceptable cracks, ruts, or protrusions, such as rocks, roots, debris, or other foreign matter. S&ME personnel and the Geosynthetic Installer's superintendent signed a Subgrade Certification CQA form as presented in Appendix III.

The geomembrane consisted of a 40 mil thick linear low density polyethylene (LLDPE) double-sided textured geomembrane. The geomembrane product, "Microspike™", was manufactured by Agru America. One roll of geomembrane was manufactured and delivered for the project.

The geomembrane was installed by Plastic Fusion Fabricators, Inc. Rolls were deployed using a track-mounted backhoe. The backhoe supported a steel rod with straps attached to the rod that inserted into the ends of each roll and allowed the material to be pulled directly off of the roll while suspended above the ground. The material was aligned utilizing manpower.

Geomembrane panels were deployed parallel to the perimeter ditch and road. Three geomembrane panels were deployed and seamed. The panels were trimmed to match the geometry of the existing cover system geosynthetics. The geosynthetics were also trimmed at the location of the perimeter drain. A total area of approximately 8,800 square feet of geomembrane was deployed for this Type 2 retrofit. The CQA forms for the geomembrane panel deployment are included in Appendix III. The geomembrane as-built drawing is included for reference in Appendix I.

Panel to panel field seams were predominantly bonded by double-hot-wedge-fusion welds although some seams were bonded by extrusion welds. Trial seams were performed and recorded prior to welding. At the beginning of each field seam, the welding machine number, welding technician's initials, welding speed and temperature, and the time for beginning the seam were recorded on the geomembrane and in the Geomembrane Seam Log CQA forms. Upon completion of each seam, the seam was non-destructively tested in accordance with the project requirements. Fusion welds were air pressure tested and extrusion welds were vacuum box tested. The non-destructive testing results were also recorded on the Geomembrane Seam Log CQA forms. The CQA forms for the geomembrane field seaming are included in Appendix III.

One Laboratory Destructive Test (LDT) sample was obtained and tested by S&ME on-site using a calibrated tensiometer. A total of approximately 626 feet of field seaming was completed for this project. The project specifications require LDT samples at approximately

every 500 linear feet of field seaming requiring two LDT samples. Considering the small size of this project, and the passing peel and shear test results for the trial seams, an exception to the 500 linear feet frequency was made.

Ten 1 inch wide specimens were cut from the LDT sample. Five specimens were tested for peel adhesion and the other five tested for bonded shear strength. Performance criteria according to Table 02672-B of the technical specifications requires a peel strength of 50 lb/in for fusion seams and 44 lb/in for extrusion seams and a shear strength of 60 lb/in for both fusion and extrusion seams. These values are required for 4 out of 5 test specimens with the 5th specimen requiring a value as low as 80% of the aforementioned value. LDT results met and exceeded performance criteria.

S&ME personnel observed panel deployment and field seaming activities and recorded defects and repairs during installation. Defects found on the panels or seams were identified and repaired as documented on the Geomembrane Defect Log CQA forms, which are included in Appendix III.

Repairs were patched using geomembrane pieces by grinding the periphery of the area to be patched; using a heat gun to "tack" the patch over the defect; and extrusion welding the patch over the defect. Repairs at panel intersections were grinded and extrusion welded with a T-weld. Repairs were then vacuum box tested as recorded in the Geomembrane Repair Testing Log CQA forms, which are included in Appendix III.

3.2.2 Geocomposite

The geocomposite drainage layer consisted of a Transnet HDPE 330 mil thick geonet drainage core with 8 ounce per square yard non-woven geotextiles heat bonded to each side. Six rolls of geocomposite drainage layer was manufactured and delivered for the project.

The material was cut into panels, pulled up the cover slope, and aligned in place utilizing manpower. The geocomposite was deployed perpendicular to the perimeter ditch and road. Once the panels were placed, each panel was overlapped approximately 4 inches side-to-side and 12 inches end-to-end. The geonet component was tied using plastic fasteners. The top geotextile component from adjacent panels was heat bonded. Wrinkles in the geocomposite drainage layer were repaired by manually straightening the panels.

3.3 Perimeter Drain & Soil Cover

The perimeter drain was installed and the soil cover was placed in a similar fashion to the Type 1 retrofit described in Section 2. The Type 2 perimeter drain pipe and stone drainage media was connected to the upstream and downstream Type 1 perimeter drain pipe and stone drainage media. Once the soil cover was placed, the minimum 2 foot soil cover thickness was verified by comparing survey points at similar locations for the restored subgrade and the soil cover. The area was then seeded and stabilized with erosion and sediment control matting.

4.0 DRAINAGE ENHANCEMENTS

In addition to the cover system perimeter retrofit described herein, work also included a down drain retrofit and channel grading to address on-going maintenance concerns.

4.1 Down Drain Retrofit

The down drain retrofit consisted of replacing the existing down drain pipe between Drop Inlets 1, 2, and 3, as well as installing seepage diaphragms downstream of these drop inlets to capture seepage that may bypass the drop inlets.

4.2.1 Pipe Replacement

The existing down drain pipe between Drop Inlet 1 and 2 was an 18 inch diameter ADS double wall HDPE pipe with mechanical bell and spigot connections. Similarly, the existing down drain pipe between Drop Inlet 2 and 3 was a 24 inch diameter ADS double wall HDPE pipe with mechanical bell and spigot connections. These down drain pipes were replaced with an 18 inch and 24 inch diameter SDR 32.5 solid wall HDPE pipe.

Each down drain pipe consisted of two pipe segments that were joined by the heat butt fusion method. The down drain pipes were also connected at the drop inlets. This was achieved by cutting the existing ADS double wall HDPE pipe and extrusion welding the end of the new solid wall HDPE pipe to the interior of the existing ADS double wall HDPE pipe. The exterior of the two pipe connections was also extrusion welded. This weld connection is illustrated in Submittal Response 004 provided in Appendix I.

4.2.2 Seepage Diaphragm Installation

In conjunction with down drain pipe replacement, three seepage diaphragms were installed around the newly replaced down drain pipes and downstream of Drop Inlets 1, 2, and 3. Seepage diaphragms consisted of 4 inch diameter perforated HDPE collector pipes surrounded by NCDOT #57 stone drainage media. The stone was wrapped with an 8 ounce per square yard non woven geotextile filter. Additionally, a 12 inch tall by 12 inch wide soil-bentonite mix was constructed downstream of the stone drainage media and around the down drain pipe and seepage diaphragm pipe to help prevent water from bypassing the stone drainage media and collector pipes.

Water collected in the stone drainage media and collector pipes is then conveyed back into the down drain pipe through a 4 inch diameter solid wall HDPE pipe that is extended downslope and connects to the top of the down drain pipe. An observation port was installed at each location where the solid wall pipe taps into the down drain pipe. The existing geocomposite below the down drain pipes was also removed in a limited area approximately 20 feet long by 4 feet wide around the seepage diaphragm installation.

4.2 Channel Grading

Channel excavation and grading was also performed to remove existing sediment, repair eroded areas, and restore channel geometries. Channel grading was performed in Channels B2, C6, and C7. Channel B2 work consisted of filling to the proposed grades to fill an existing erosion gully and reduce the channel slope. Channel C6 work consisted

of removing the existing check dams and repairing the soil cover erosion at the sides of the check dams. Channel C7 work consisted of removing accumulated sediment and restoring the channel to the original channel geometry.

CONSTRUCTION CERTIFICATION STATEMENT
FOR
DUKE ENERGY – BELEWS CREEK STEAM STATION
PINE HALL ROAD ASH LANDFILL CLOSURE (PERMIT NO. 85-03)
COVER SYSTEM RETROFIT
CONSTRUCTION DOCUMENTATION REPORT

OWNER: DUKE ENERGY
OPERATOR: DUKE ENERGY

by:

S&ME, Inc.
9751 Southern Pine Boulevard
Charlotte, North Carolina 28273-5560

I hereby certify that the results of construction quality assurance activities conducted by S&ME Inc., as summarized in this report, indicate that the Belews Creek Steam Station Pine Hall Road Ash Landfill Closure Cover System Retrofit was constructed in general accordance with the project drawings and specifications.

NORTH CAROLINA PROFESSIONAL SEAL 032153 ENGINEER KENNETH R. DALY

10/4/11

Kenneth R. Daly, P.E.
N.C. Registration No. 032153

APPENDIX I – PROJECT DOCUMENTS

APPENDIX I – PROJECT DOCUMENTS

Issued for Construction Drawings
Issued for Construction Specifications
Notice of Change
Submittals
As-Built Drawing

Issued for Construction Drawings

PINE HALL ROAD ASH LANDFILL CLOSURE
COVER SYSTEM RETROFIT
JUNE 2011
ISSUED FOR CONSTRUCTION

DUKE ENERGY - BELEWS CREEK STEAM STATION
BELEWS CREEK, NORTH CAROLINA

LOCATION / S&ME OFFICE MAP
NOT TO SCALE

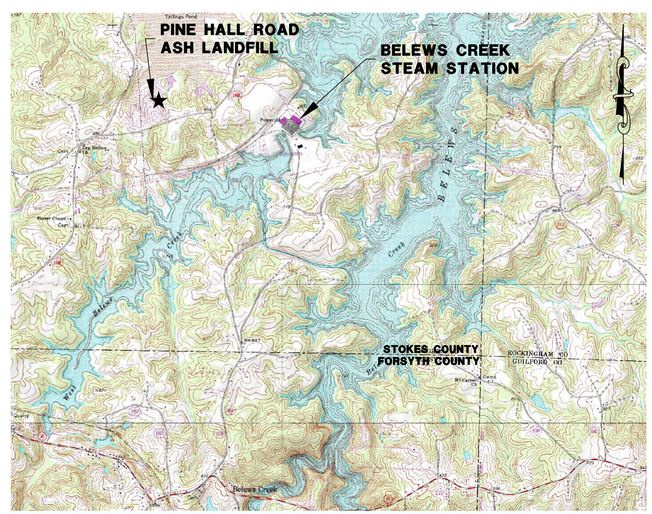

SITE VICINITY MAP
NOT TO SCALE

INDEX OF DRAWINGS

DRAWING	TITLE
C1	EXISTING CONDITIONS
C2	PROPOSED RETROFIT AND MAINTENANCE PLAN
C3	PROPOSED PERIMETER DRAIN PLAN
D1	PROPOSED PERIMETER DRAIN DETAILS
D2	E & S CONTROL DETAILS 1
D3	E & S CONTROL DETAILS 2
D4	DOWN DRAIN RETROFIT

NORTH CAROLINA PROFESSIONAL SEAL 032153 ENGINEER KENNETH R. DALY

Duke Energy ©

S&ME
9751 SOUTHERN PINE BLVD.
CHARLOTTE, NC 28273
(704) 523-4726
(704) 525-3953 Fax
WWW.SMEINC.COM
ENGINEERING LICENSE NO. F-0176

S&ME PROJECT NO.
1356-07-017 PHASE 5

- ISSUED FOR CONSTRUCTION -

BELEWS CREEK STEAM STATION - PINE HALL ROAD ASH LANDFILL CLOSURE

S&ME PROJECT NO.
1356-07-017 PHASE 5

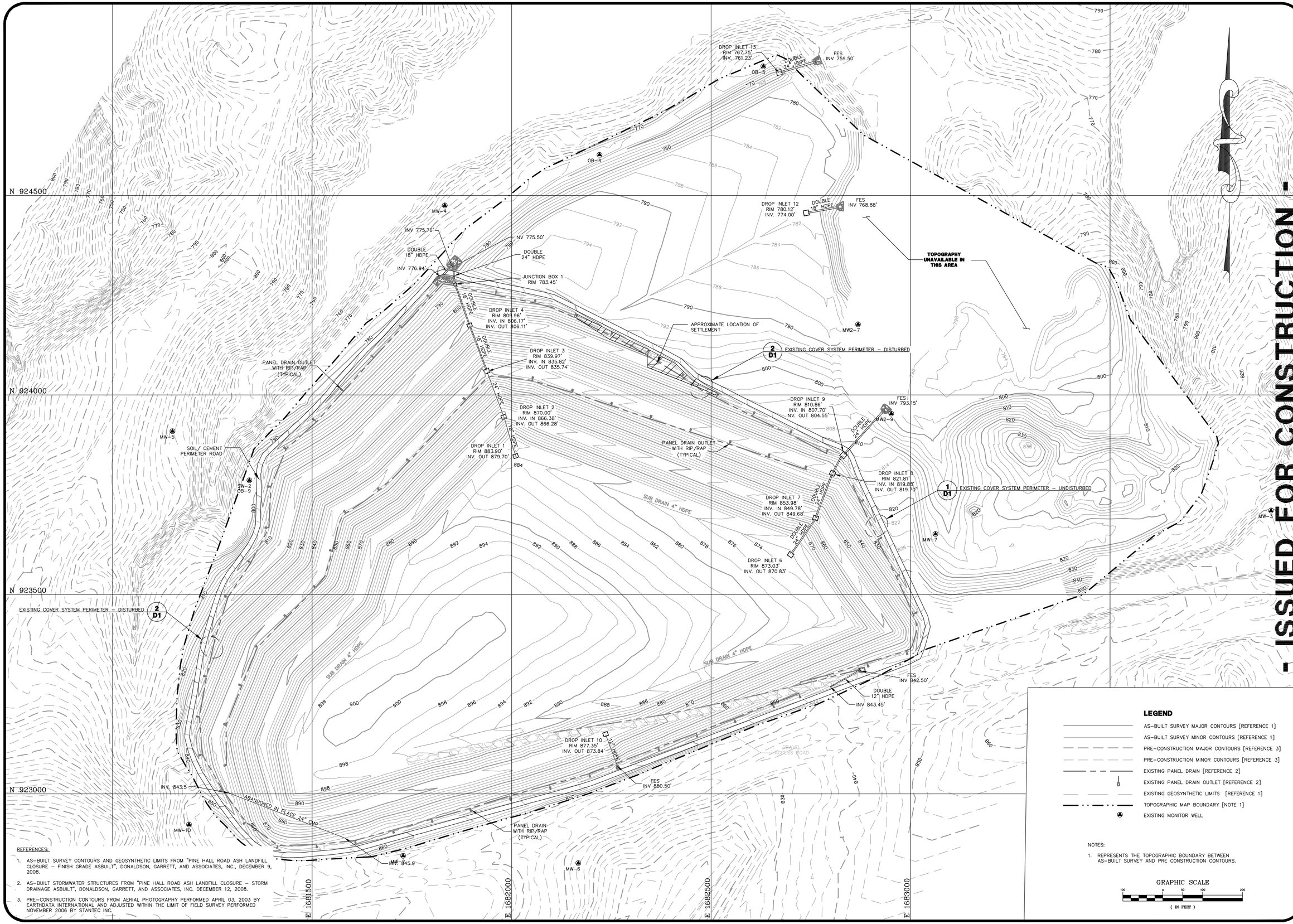

REFERENCES:

1. AS-BUILT SURVEY CONTOURS AND GEOSYNTHETIC LIMITS FROM "PINE HALL ROAD ASH LANDFILL CLOSURE – FINISH GRADE ASBUILT", DONALDSON, GARRETT, AND ASSOCIATES, INC., DECEMBER 9, 2008.
2. AS-BUILT STORMWATER STRUCTURES FROM "PINE HALL ROAD ASH LANDFILL CLOSURE – STORM DRAINAGE ASBUILT", DONALDSON, GARRETT, AND ASSOCIATES, INC. DECEMBER 12, 2008.
3. PRE-CONSTRUCTION CONTOURS FROM AERIAL PHOTOGRAPHY PERFORMED APRIL 03, 2003 BY EARTHDATA INTERNATIONAL AND ADJUSTED WITHIN THE LIMIT OF FIELD SURVEY PERFORMED NOVEMBER 2006 BY STANTEC INC.

LEGEND

- AS-BUILT SURVEY MAJOR CONTOURS [REFERENCE 1]
- AS-BUILT SURVEY MINOR CONTOURS [REFERENCE 1]
- PRE-CONSTRUCTION MAJOR CONTOURS [REFERENCE 3]
- PRE-CONSTRUCTION MINOR CONTOURS [REFERENCE 3]
- EXISTING PANEL DRAIN [REFERENCE 2]
- EXISTING PANEL DRAIN OUTLET [REFERENCE 2]
- EXISTING GEOSYNTHETIC LIMITS [REFERENCE 1]
- TOPOGRAPHIC MAP BOUNDARY [NOTE 1]
- EXISTING MONITOR WELL

NOTES:

1. REPRESENTS THE TOPOGRAPHIC BOUNDARY BETWEEN AS-BUILT SURVEY AND PRE CONSTRUCTION CONTOURS.

GRAPHIC SCALE

100 0 50 100 200

(IN FEET)

- ISSUED FOR CONSTRUCTION -

Duke Energy ©

S&ME
9751 SOUTHERN PINE BLVD.
CHARLOTTE, N.C. 28273
(704)523-4726
WWW.SMEINC.COM

NORTH CAROLINA PROFESSIONAL SEAL 032153 ENGINEER R. KENNETH DALY

NO.	DATE	DESCRIPTION	BY
0	6-6-11	ISSUED FOR CONSTRUCTION	KRD

EXISTING CONDITIONS
PINE HALL ROAD ASH LANDFILL

BELEWS CREEK STEAM STATION
BELEWS CREEK, NORTH CAROLINA

ENGINEERING LICENSE NO: F-0176	
DRAWN BY: CLD	CHECKED BY: KRD
DESIGNED BY: CHR	APPROVED BY:
PROJECT NUMBER 1356-07-017	
DUKE ENERGY DRAWING NUMBER TBD	
SCALE: AS SHOWN	DATE: 6-6-11
DRAWING: C1	OF: 7

DRAWING PATH: G:\1356\DUKE ENERGY\07-017 Pinehall Rd ASA__ENGSGN\Drain Retrofit -BID ISSUE\C1 -existing_conditions.dwg

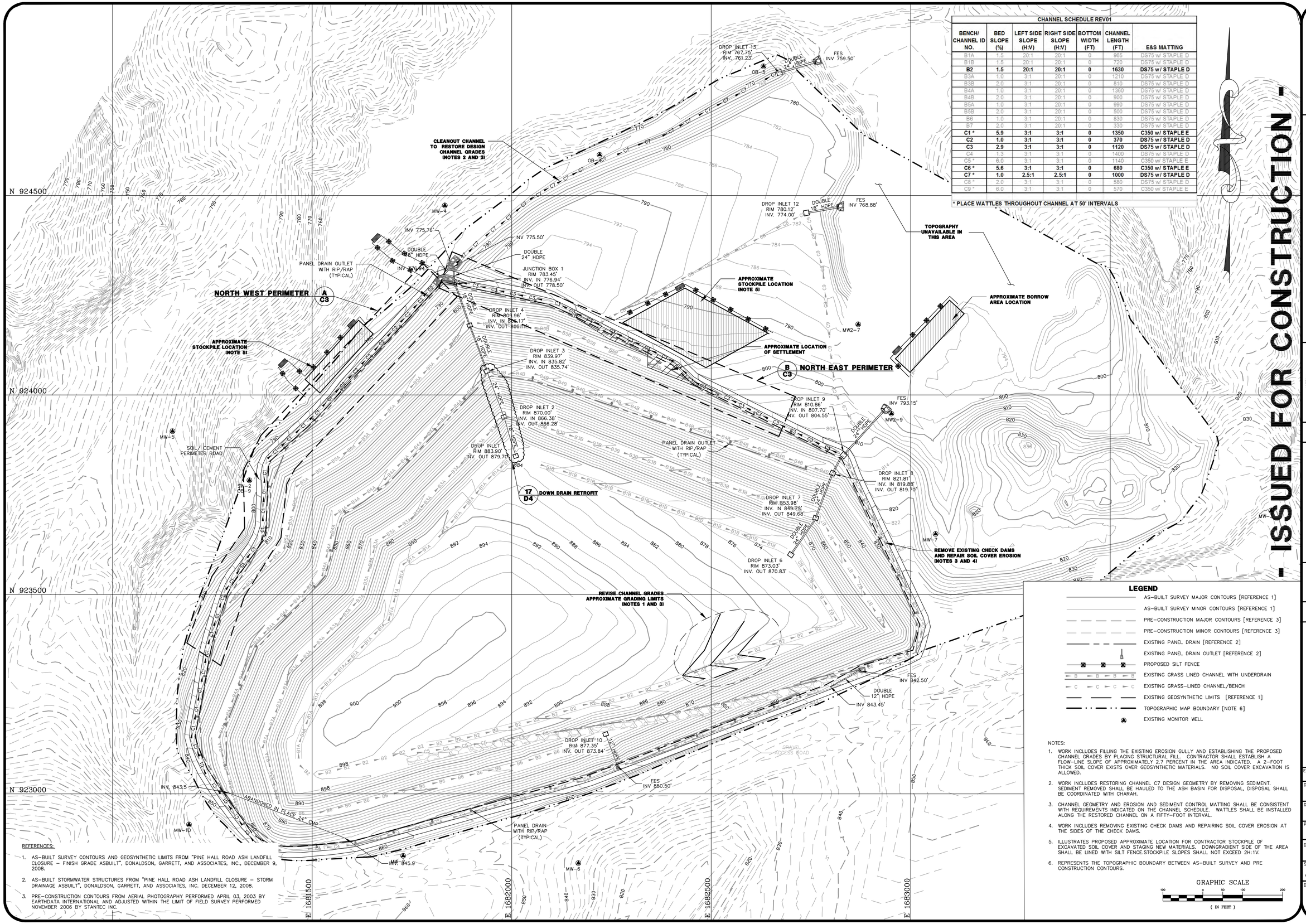

CHANNEL SCHEDULE REV01						
BENCH/ CHANNEL ID NO.	BED SLOPE (%)	LEFT SIDE SLOPE (H:V)	RIGHT SIDE SLOPE (H:V)	BOTTOM WIDTH (FT)	CHANNEL LENGTH (FT)	E&S MATTING
B1A	1.5	20:1	20:1	0	965	DS75 w/ STAPLE D
B1B	1.5	20:1	20:1	0	720	DS75 w/ STAPLE D
B2	**1.5**	**20:1**	**20:1**	**0**	**1630**	**DS75 w/ STAPLE D**
B3A	1.0	3:1	20:1	0	1210	DS75 w/ STAPLE D
B3B	2.0	3:1	20:1	0	810	DS75 w/ STAPLE D
B4A	1.0	3:1	20:1	0	1360	DS75 w/ STAPLE D
B4B	2.0	3:1	20:1	0	900	DS75 w/ STAPLE D
B5A	1.0	3:1	20:1	0	990	DS75 w/ STAPLE D
B5B	2.0	3:1	20:1	0	500	DS75 w/ STAPLE D
B6	1.0	3:1	20:1	0	830	DS75 w/ STAPLE D
B7	2.0	3:1	20:1	0	330	DS75 w/ STAPLE D
C1 *	**5.9**	**3:1**	**3:1**	**0**	**1350**	**C350 w/ STAPLE E**
C2	**1.0**	**3:1**	**3:1**	**0**	**370**	**DS75 w/ STAPLE D**
C3	**2.9**	**3:1**	**3:1**	**0**	**1120**	**DS75 w/ STAPLE D**
C4	1.3	3:1	3:1	0	1400	DS75 w/ STAPLE D
C5 *	6.0	3:1	3:1	0	1140	C350 w/ STAPLE E
C6 *	**5.6**	**3:1**	**3:1**	**0**	**680**	**C350 w/ STAPLE E**
C7 *	**1.0**	**2.5:1**	**2.5:1**	**0**	**1000**	**DS75 w/ STAPLE D**
C8 *	2.0	3:1	3:1	0	580	DS75 w/ STAPLE D
C9 *	6.0	3:1	3:1	0	570	C350 w/ STAPLE E

* PLACE WATTLES THROUGHOUT CHANNEL AT 50' INTERVALS

LEGEND

- AS-BUILT SURVEY MAJOR CONTOURS [REFERENCE 1]
- AS-BUILT SURVEY MINOR CONTOURS [REFERENCE 1]
- PRE-CONSTRUCTION MAJOR CONTOURS [REFERENCE 3]
- PRE-CONSTRUCTION MINOR CONTOURS [REFERENCE 3]
- EXISTING PANEL DRAIN [REFERENCE 2]
- EXISTING PANEL DRAIN OUTLET [REFERENCE 2]
- PROPOSED SILT FENCE
- EXISTING GRASS LINED CHANNEL WITH UNDERDRAIN
- EXISTING GRASS-LINED CHANNEL/BENCH
- EXISTING GEOSYNTHETIC LIMITS [REFERENCE 1]
- TOPOGRAPHIC MAP BOUNDARY [NOTE 6]
- EXISTING MONITOR WELL

NOTES:

1. WORK INCLUDES FILLING THE EXISTING EROSION GULLY AND ESTABLISHING THE PROPOSED CHANNEL GRADES BY PLACING STRUCTURAL FILL. CONTRACTOR SHALL ESTABLISH A FLOW-LINE SLOPE OF APPROXIMATELY 2.7 PERCENT IN THE AREA INDICATED. A 2-FOOT THICK SOIL COVER EXISTS OVER GEOSYNTHETIC MATERIALS. NO SOIL COVER EXCAVATION IS ALLOWED.
2. WORK INCLUDES RESTORING CHANNEL C7 DESIGN GEOMETRY BY REMOVING SEDIMENT. SEDIMENT REMOVED SHALL BE HAULED TO THE ASH BASIN FOR DISPOSAL, DISPOSAL SHALL BE COORDINATED WITH CHARAH.
3. CHANNEL GEOMETRY AND EROSION AND SEDIMENT CONTROL MATTING SHALL BE CONSISTENT WITH REQUIREMENTS INDICATED ON THE CHANNEL SCHEDULE. WATTLES SHALL BE INSTALLED ALONG THE RESTORED CHANNEL ON A FIFTY-FOOT INTERVAL.
4. WORK INCLUDES REMOVING EXISTING CHECK DAMS AND REPAIRING SOIL COVER EROSION AT THE SIDES OF THE CHECK DAMS.
5. ILLUSTRATES PROPOSED APPROXIMATE LOCATION FOR CONTRACTOR STOCKPILE OF EXCAVATED SOIL COVER AND STAGING NEW MATERIALS. DOWNGRADIENT SIDE OF THE AREA SHALL BE LINED WITH SILT FENCE.STOCKPILE SLOPES SHALL NOT EXCEED 2H:1V.
6. REPRESENTS THE TOPOGRAPHIC BOUNDARY BETWEEN AS-BUILT SURVEY AND PRE CONSTRUCTION CONTOURS.

GRAPHIC SCALE

100 0 50 100 200

(IN FEET)

REFERENCES:

1. AS-BUILT SURVEY CONTOURS AND GEOSYNTHETIC LIMITS FROM "PINE HALL ROAD ASH LANDFILL CLOSURE – FINISH GRADE ASBUILT", DONALDSON, GARRETT, AND ASSOCIATES, INC., DECEMBER 9, 2008.
2. AS-BUILT STORMWATER STRUCTURES FROM "PINE HALL ROAD ASH LANDFILL CLOSURE – STORM DRAINAGE ASBUILT", DONALDSON, GARRETT, AND ASSOCIATES, INC. DECEMBER 12, 2008.
3. PRE-CONSTRUCTION CONTOURS FROM AERIAL PHOTOGRAPHY PERFORMED APRIL 03, 2003 BY EARTHDATA INTERNATIONAL AND ADJUSTED WITHIN THE LIMIT OF FIELD SURVEY PERFORMED NOVEMBER 2006 BY STANTEC INC.

- ISSUED FOR CONSTRUCTION -

Duke Energy ©

S&ME
9751 SOUTHERN PINE BLVD.
CHARLOTTE, N.C. 28273
(704)523-4726
WWW.SMEINC.COM

NORTH CAROLINA PROFESSIONAL SEAL 032153 ENGINEER R. HUNTER CRAIG

NO.	DATE	DESCRIPTION	BY
0	6-6-11	ISSUED FOR CONSTRUCTION	KRD

PROPOSED RETROFIT AND MAINTENANCE PLAN PINE HALL ROAD ASH LANDFILL

BELEWS CREEK STEAM STATION BELEWS CREEK, NORTH CAROLINA

ENGINEERING LICENSE NO: F-0176	
DRAWN BY: CLD	CHECKED BY: KRD
DESIGNED BY: CHR	APPROVED BY:
PROJECT NUMBER 1356-07-017	
DUKE ENERGY DRAWING NUMBER TBD	
SCALE: AS SHOWN	DATE: 6-6-11
DRAWING: C2	OF: 7

DRAWING PATH: Q:\1356\DUKE ENERGY\07-017 Pinehall Rd CQA_EROSION\Iron Retrofit -BID SSS\EVC2- PROPOSED RETOFIT.dwg

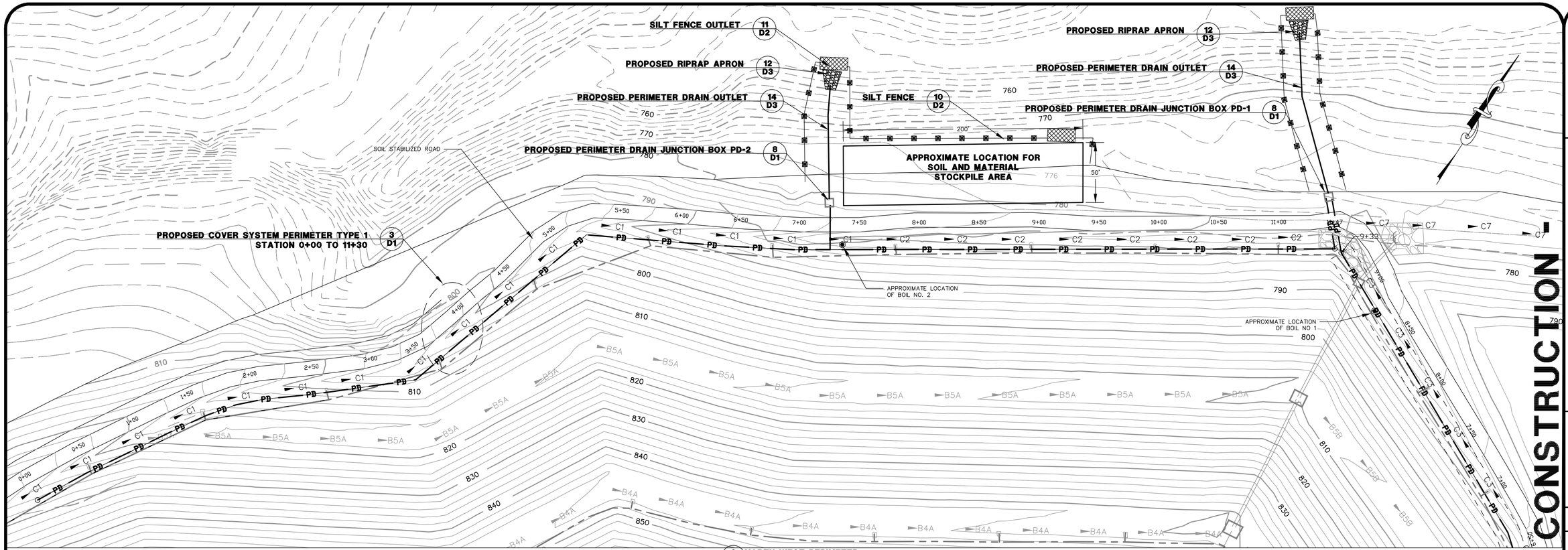

A C3 NORTH WEST PERIMETER
SCALE:1" = 40'

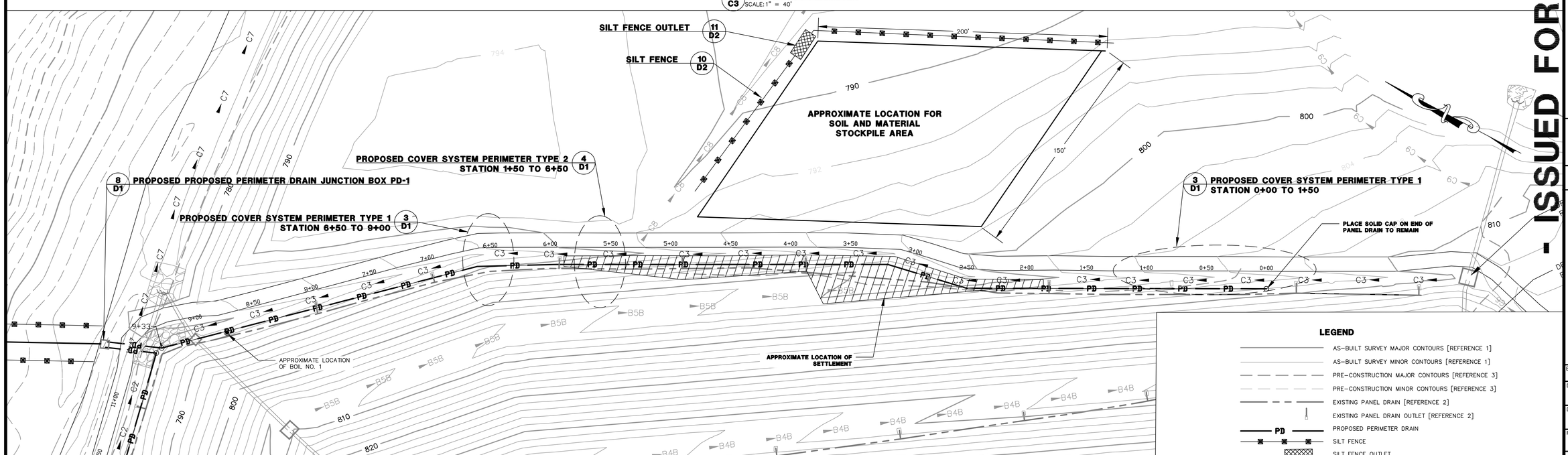

B C3 NORTH EAST PERIMETER
SCALE:1" = 40'

REFERENCES:

1. AS-BUILT SURVEY CONTOURS AND GEOSYNTHETIC LIMITS FROM "PINE HALL ROAD ASH LANDFILL CLOSURE – FINISH GRADE AS-BUILT", DONALDSON, GARRETT, AND ASSOCIATES, INC., DECEMBER 9, 2008.
2. PRE-CONSTRUCTION CONTOURS FROM AERIAL PHOTOGRAPHY PERFORMED APRIL 03, 2003 BY EARTHDATA INTERNATIONAL AND ADJUSTED WITHIN THE LIMIT OF FIELD SURVEY PERFORMED NOVEMBER 2006 BY STANTEC INC.
3. AS-BUILT STORMWATER STRUCTURES FROM "PINE HALL ROAD ASH LANDFILL CLOSURE – STORM DRAINAGE AS-BUILT", DONALDSON, GARRETT, AND ASSOCIATES, INC. DECEMBER 12, 2008.

LEGEND

- AS-BUILT SURVEY MAJOR CONTOURS [REFERENCE 1]
- AS-BUILT SURVEY MINOR CONTOURS [REFERENCE 1]
- PRE-CONSTRUCTION MAJOR CONTOURS [REFERENCE 3]
- PRE-CONSTRUCTION MINOR CONTOURS [REFERENCE 3]
- EXISTING PANEL DRAIN [REFERENCE 2]
- EXISTING PANEL DRAIN OUTLET [REFERENCE 2]
- PD — PROPOSED PERIMETER DRAIN
- SILT FENCE
- SILT FENCE OUTLET
- C3 C3 C3 — EXISTING GRASS-LINED CHANNEL

GRAPHIC SCALE
40 0 20 40 80
(IN FEET)

- ISSUED FOR CONSTRUCTION -

Duke Energy®

9751 SOUTHERN PINE BLVD.
CHARLOTTE, N.C. 28273
(704)523-4726
S&ME
WWW.SMEINC.COM

NORTH CAROLINA PROFESSIONAL SEAL 032153 ENGINEER KENNETH R. DALY

NO.	DATE	DESCRIPTION	BY
0	6-6-11	ISSUED FOR CONSTRUCTION	KRD

PROPOSED PERIMETER DRAIN PLAN
PINE HALL ROAD ASH LANDFILL

BELEWS CREEK STEAM STATION
BELEWS CREEK, NORTH CAROLINA

ENGINEERING LICENSE NO: F-0176

DRAWN BY: CLD	CHECKED BY: KRD
DESIGNED BY: CHR	APPROVED BY:
PROJECT NUMBER: 1356-07-017	
DUKE ENERGY DRAWING NUMBER: TBD	
SCALE: AS SHOWN	DATE: 6-6-11
DRAWING: C3	OF: 7

DRAWING PATH: Q:\1356\DUKE ENERGY\07-017 Pinehall Rd CQA__EROSION\Drain Retrofit -IBID ISSUE\C3 PROPOSED DRAIN PLAN.dwg

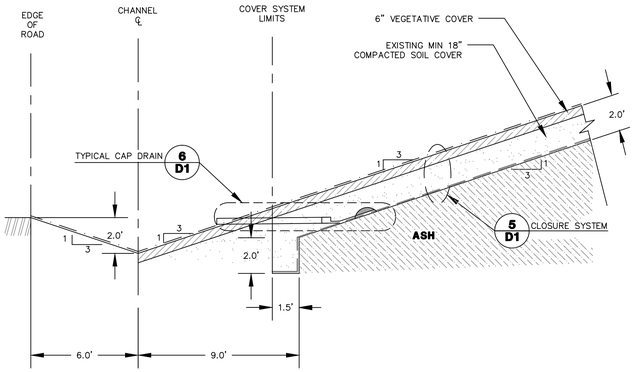

1 D1 EXISTING COVER SYSTEM PERIMETER - UNDISTURBED
SCALE: 1" = 4'

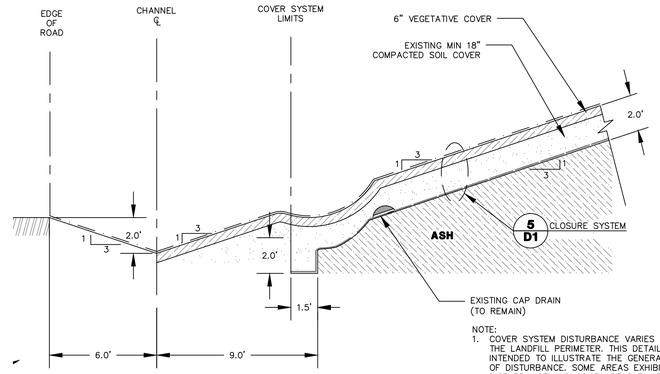

NOTE:
1. COVER SYSTEM DISTURBANCE VARIES AROUND THE LANDFILL PERIMETER. THIS DETAIL IS INTENDED TO ILLUSTRATE THE GENERAL NATURE OF DISTURBANCE. SOME AREAS EXHIBIT MORE DISTURBANCE AND SOME AREAS EXHIBIT LESS.

2 D1 EXISTING COVER SYSTEM PERIMETER - DISTURBED
SCALE: 1" = 4'

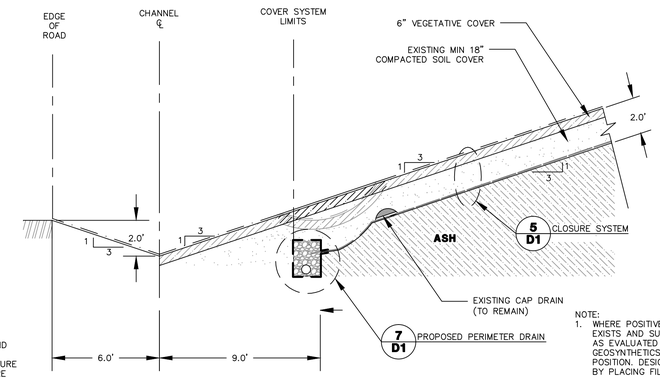

NOTE:
1. WHERE POSITIVE SLOPE AT THE GEOSYNTHETICS EXISTS AND SUBGRADE SUPPORT IS ADEQUATE AS EVALUATED IN THE FIELD BY THE ENGINEER, GEOSYNTHETICS MAY REMAIN IN THE EXISTING POSITION. DESIGN GRADE SHALL BE RESTORED BY PLACING FILL ABOVE THE GEOSYNTHETICS.
2. REPRESENTS RETROFIT FROM APPROXIMATE STATION NE 0+00 TO 1+50, NE 6+50 TO 9+00 AND THE WHOLE NW SIDE

3 D1 PROPOSED COVER SYSTEM PERIMETER - TYPE 1
SCALE: 1" = 4'

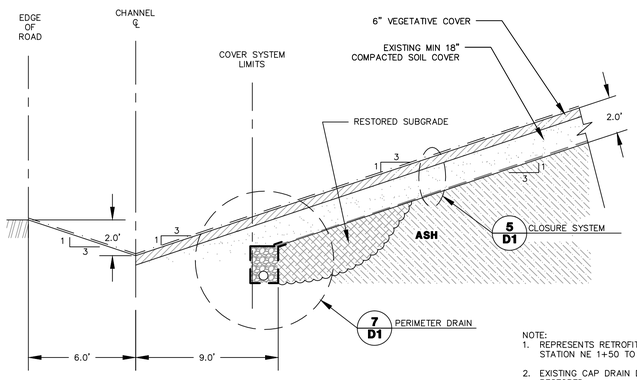

NOTE:
1. REPRESENTS RETROFIT FROM APPROXIMATE STATION NE 1+50 TO 6+50
2. EXISTING CAP DRAIN DOES NOT NEED TO BE RESTORED

4 D1 PROPOSED COVER SYSTEM PERIMETER - TYPE 2
SCALE: 1" = 4'

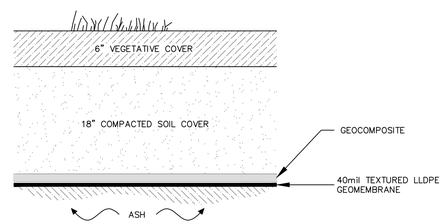

5 D1 CLOSURE SYSTEM DETAIL
SCALE: 1" = 1'

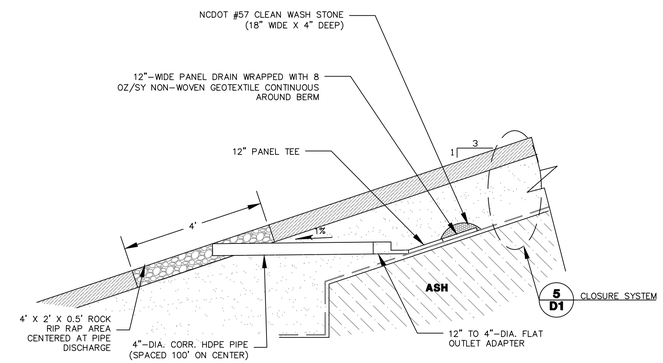

6 D1 EXISTING TYPICAL CAP DRAIN DETAIL
SCALE: 1" = 2'

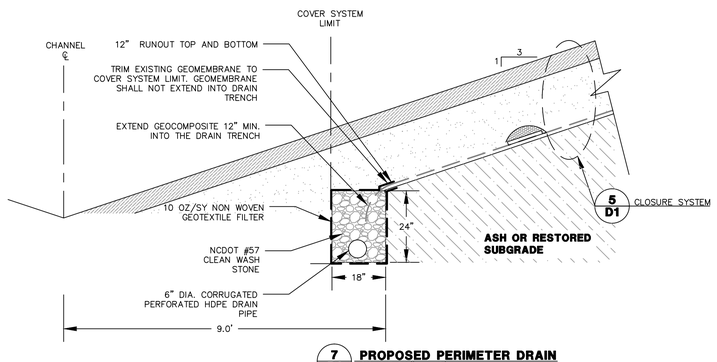

7 D1 PROPOSED PERIMETER DRAIN
SCALE: 1" = 2'

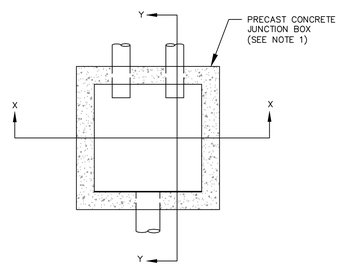

PLAN

JUNCTION BOX SCHEDULE							
JUNCTION BOX NO.	DIMENSIONS			INLET PIPE DIAMETER	OUTLET PIPE DIAMETER	ELEVATIONS	
	SPAN	WIDTH	DEPTH			TOP	INVERT
	A	B	C	DI	DO	E	F
PD-1	3'	3'	3'	2-6"	1-8"	*	*
PD-2	3'	3'	3'	1-6"	1-6"	*	*

* TO BE LOCATED IN FIELD

NOTE:
1. SHALL BE CONSTRUCTED IN ACCORDANCE WITH NCDOT STANDARD DETAIL 840.45 "PRECAST DRAINAGE STRUCTURE".
2. SHALL CONSIST OF ALUMINUM GRATING FOR PEDESTRIAN TRAFFIC LOADING ONLY (100 PSF).
3. TOP OF PRECAST JUNCTION BOX (ELEV. "E") SHALL BE 1" ABOVE SURROUNDING GRADE.
4. PIPE SHALL BE CONNECTED TO JUNCTION BOX WITH NON-SHRINK GROUT IN ACCORDANCE WITH PIPE MANUFACTURERS RECOMMENDATIONS (ADS DETAIL STD-202A OR EQUIVALENT)
5. DETAIL SHOWS TWO INLET PIPES REPRESENTING JUNCTION BOX PD-1.
6. INLET PIPE FOR PD-2 SHALL BE POSITIONED HORIZONTALLY IN THE CENTER OF THE BOX.

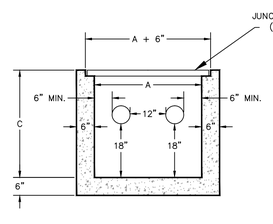

SECTION X-X

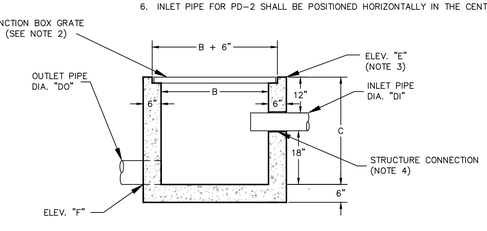

SECTION Y-Y

8 D1 PROPOSED PERIMETER DRAIN JUNCTION BOX
SCALE: 1" = 2'

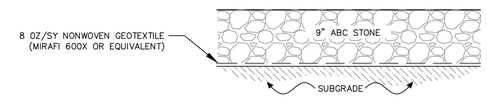

9 D1 ACCESS ROAD SURFACING
SCALE: 1" = 1'

- ISSUED FOR CONSTRUCTION -

Duke Energy®
9751 SOUTHERN PINE BLVD.
CHARLOTTE, N.C. 28273
(704)523-4726
S&ME
WWW.SMEINC.COM
NORTH CAROLINA PROFESSIONAL SEAL 032153 ENGINEER KENNETH R. DALY

NO.	DATE	DESCRIPTION	BY
0	6-6-11	ISSUED FOR CONSTRUCTION	KRD

PROPOSED PERIMETER DRAIN DETAILS
PINE HALL ROAD ASH LANDFILL
BELEWS CREEK STEAM STATION
BELEWS CREEK, NORTH CAROLINA

ENGINEERING LICENSE NO: F-0176	
DRAWN BY: CLD	CHECKED BY: KRD
DESIGNED BY: CHR	APPROVED BY:
PROJECT NUMBER: 1356-07-017	
DUKE ENERGY DRAWING NUMBER: TBD	
SCALE: AS SHOWN	DATE: 6-6-11
DRAWING: D1	OF: 7

DRAWING PATH: Q:\1356\DUKE ENERGY\07-017 Pinehall Rd CCR__EROSION\Drain Retrofit -BID ISSUE\D1 DETAILS.dwg

DEFINITION
Controlling runoff and erosion on disturbed areas by establishing perennial vegetative : cover with seed.

PURPOSE
To reduce erosion and decrease sediment yield from disturbed areas, and to permanently stabilize such areas in a manner that is economical, adapts to site conditions, and allows selection of the most appropriate plant materials.

SPECIFICATIONS

SEEDBED REQUIREMENTS
Establishment of vegetation should not be attempted on sites that are unsuitable due to excessive soil compaction, inappropriate soil texture, poor drainage, concentrated overland flow, or steepness of slope until measures have been taken to correct these problems.

To maintain a good stand of vegetation, the soil must meet certain minimum requirements as a growth medium. The existing soil should have these criteria:

- Enough fine–grained (silt and clay) material to maintain adequate moisture and nutrient supply (available water capacity of at least .05 inches water to 1 inch of soil).
- Sufficient pore space to permit root penetration.
- Sufficient depth of soil to provide an adequate root zone. The depth to rock or impermeable layers such as hardpans should be 12 inches or more, except on slopes steeper than 2:1 where the addition of soil is not feasible.
- A favorable pH range for plant growth, usually 6.0 – 6.5.
- Free from large roots, branches, stones, large clods of earth, or trash of any kind. Clods and stones may be left on slopes steeper than 3:1 if they are to be hydro seeded.

If any of the above criteria are not met – i.e., if existing soil is too coarse, dense, shallow or acidic to foster vegetation – special amendments are required. The soil conditioners described below may be beneficial or, preferably, topsoil may be applied.

SEEDBED PREPARATION
Install necessary mechanical erosion and sedimentation control practices before seeding, and complete grading according to the approved plan.

Lime and fertilizer needs should be determined by soil tests. Directions, sample cartons, and information sheets are available through county Agricultural Extension offices. Testing is also done by commercial laboratories.

When soil tests results are not available, follow rates suggested in the seeding specifications shown at right. Application rates usually fall into the following ranges:

- Ground agricultural limestone:
  Light–textured, sandy soils: 1 to 1–1/2 tons/acre
  Heavy–textured, clayey soils: 2–3 tons/acre
- Fertilizer:
  Grasses: 800–1200 lb/acre of 10–10–10 (or the equivalent)
  Grass–legume mixtures: 800–1200 lb/acre of 5–10–10 (or the equivalent)

Apply lime and fertilizer evenly and incorporate into the top 4–6 inches of soil by disking or other suitable means. Operate machinery on the contour. When using a hydro seeder, apply lime and fertilizer to a rough, loose surface.

Roughen surfaces prior to seeding.

Complete seedbed preparation by breaking up large clods and raking into a smooth, uniform surface (slopes less than 3:1). Fill in or level depressions that can collect water. Broadcast seed into a freshly loosened seedbed that has not been sealed by rainfall.

SEEDING
Seeding dates given in the seeding mixture specifications are designated as "best" or "possible". Seedings properly carried out within the "best" dates have a high probability of success. It is also possible to have satisfactory establishment when seeding outside these dates. However, as you deviate from them, the probability of failure increases rapidly. Seeding on the last date shown under "possible" may reduce changes of success by 30–50%. Always take this into account in scheduling land–disturbing activities.

Use certified seed for permanent seeding whenever possible.

Labeling of non–certified seed is also required by law. Labels contain important information on seed purity, germination, and presence of wood seeds. Seeds must meet State standards for content of noxious weeds. Do no accept seed containing "prohibited" noxious weed seed.

Inoculate legume seed with the Rhizobium bacteria appropriate to the species of legume. Apply seed uniformly with a cyclone seeder, drop–type spreader, drill, cultipacker seeder, or hydro seeder on a firm, friable seedbed.

When using a drill or cultipacker seeder, plant small grains no more than 1 inch deep, grasses and legumes no more than 1/2 inch. Equipment should be calibrated in the field for the desired seeding rate.

When using broadcast–seeding methods, subdivide the area into workable sections and determine the amount of seed needed for each section. Apply one–half the seed while moving back and forth across the area, making a uniform pattern: then apply the second half in the same way, but moving at right angles to the first pass.

Mulch all plantings immediately after seeding.

HYDRO SEEDING
Surface roughening is particularly important when hydro seeding, as a roughened slope will provide some natural coverage for lime, fertilizer, and seed. The surface should not be compacted or smooth. Fine seedbed preparation is not necessary for hydro seeding operations: large clods, stones, and irregularities provide cavities in which seeds can lodge.

Rate of wood fiber (cellulose) application should be at least 2,000 lb/acre.

Apply legume inoculants at four times the recommended rate when adding inoculant to a hydro seeder slurry.

If a machinery breakdown of 1/2 to 2 hours occurs, add 50% more seed to the tank, based on the proportion of the slurry remaining. This should compensate for damage to seed. Beyond 2 hours, a full rate of new seed may be necessary.

Lime is not normally applied with a hydraulic seeder because it is abrasive. It can be blown onto steep slopes in dry form.

MAINTENANCE
Generally, a stand of vegetation cannot be determined to be fully established until soil cover has been maintained for one full year from planting. Inspect seeded areas for failure and make necessary repairs and reseedings within the same season, if possible.

Reseeding––If a stand has inadequate cover, re–evaluate choice of plant materials and quantities of lime and fertilizer. Re–establish the stand after seedbed preparation or over– seed the stand. Consider seeding temporary, annual species if the time of year is not appropriate for permanent seeding.

If vegetation fails to grow, soil must be tested to determine if acidity or nutrient imbalance is responsible.

Fertilization––On the typical disturbed site, full establishment usually requires re–fertilization in the second growing season. Fine turf requires annual maintenance fertilization. Use soil tests if possible or follow the guidelines given for the specific seeding mixture.

TEMPORARY SEEDING SPECIFICATIONS

Seeding mixture (fall)

Species*	Rate (lb/acre)
Rye Grain (*Secale cereale*)	120

Seeding Mixture (late winter early spring)

Species*	Rate (lb/acre)
Rye Grain (*Secale cereale*)	120
Annual (Korean) Lespedeza (*Kummerowia stipulacea*)	50

Seeding mixture (summer)

Species*	Rate (lb/acre)
German Millet (*Setaria italica*)	40

Seeding dates (Piedmont)

Fall:	Aug. 15 – Dec. 30
Late winter (early spring):	Jan. 1 – May 1 Late
Summer:	May 1 – Aug. 15

Soil amendments
Follow recommendations of soil tests or apply 2,000 lb/acre ground agricultural limestone and 750 lb/acre 10–10–10 fertilizer.

Mulch
Apply 4,000 lb/acre straw. Anchor mulch by tacking with asphalt, roving or a mulch anchoring tool. A disk with blades set nearly straight can be used as a mulch anchoring. tool.

Maintenance
Re–fertilize if growth is not fully adequate. Reseed, re–fertilize and mulch immediately following erosion or other damage.

Pursuant to G.S. 113A–57(2), the angle for graded slopes and fills shall be no greater than the angle that can be retained by vegetative cover or other adequate erosion–control devices or structures. In any event, slopes left exposed will, within 21 calendar days of completion of any phase of grading, be planted or otherwise provided with temporary or permanent ground cover, devices, or structures sufficient to restrain erosion.

Pursuant to G.S. 113A–57(3), provisions for permanent groundcover sufficient to restrain erosion must be accomplished for all disturbed areas within 15 working days or 90 calendar days (whichever is shorter) following completion of construction or development.

*REF: 6.10 A,B and C, NC Erosion and Sediment Control Planning and Design Manual, 2006

PERMANENT SEEDING SPECIFICATIONS

Seeding mixture

Species*	Rate (lb/acre)
Tall fescue (*Festuca arundinacea*) (Grass lined Channels)	200
Tall fescue (*Festuca arundinacea*) (Other Areas)	100

Nurse plants
Between May 1 and Aug. 15, add 10 lb/acre German millet (*Setaria italica*) or 15 lb/acre Sudan grass. Prior to May 1 or after Aug. 15, add 40 lb/acre Rye Grain (*Festuca arundinacea*).

Seeding dates

	Best	Possible
Fall:	Aug. 25 – Sept. 15	Aug. 20 – Oct. 25
Late winter:	Feb. 15 – Mar. 21	Feb. 1 –Apr. 15

Fall is best for tall fescue (*Festuca arundinacea*) and late winter or summer for lespedeza. Over seeding of Kobe lespedeza (*Kummerowia striata*) over fall–seeded tall fescue is very effective.

Soil amendments
Apply lime and fertilizer according to soil tests, or apply 4,000 lb/acre ground agricultural limestone and 1,000 lb/acre 10–10–10 fertilizer.

Mulch
Apply 4,000–5,000 lb/acre grain straw or equivalent cover of another suitable mulching material. Anchor mulch by tacking with asphalt, roving, or netting. Netting is the preferred anchoring method on steep slopes.

Maintenance
Re–fertilize in the second year unless growth is fully adequate. May be mowed once or twice a year, but mowing is not necessary. Reseed, fertilize, and mulch damaged areas immediately.

Pursuant to G.S. 113A–57(3), provisions for permanent groundcover sufficient to restrain erosion must be accomplished for all disturbed areas within 15 working days or 90 calendar days (whichever is shorter) following completion of construction or development.

*REF: 6.11L NC Erosion and Sediment Control Planning and Design Manual, 2006

GENERAL SEEDING SPECIFICATIONS

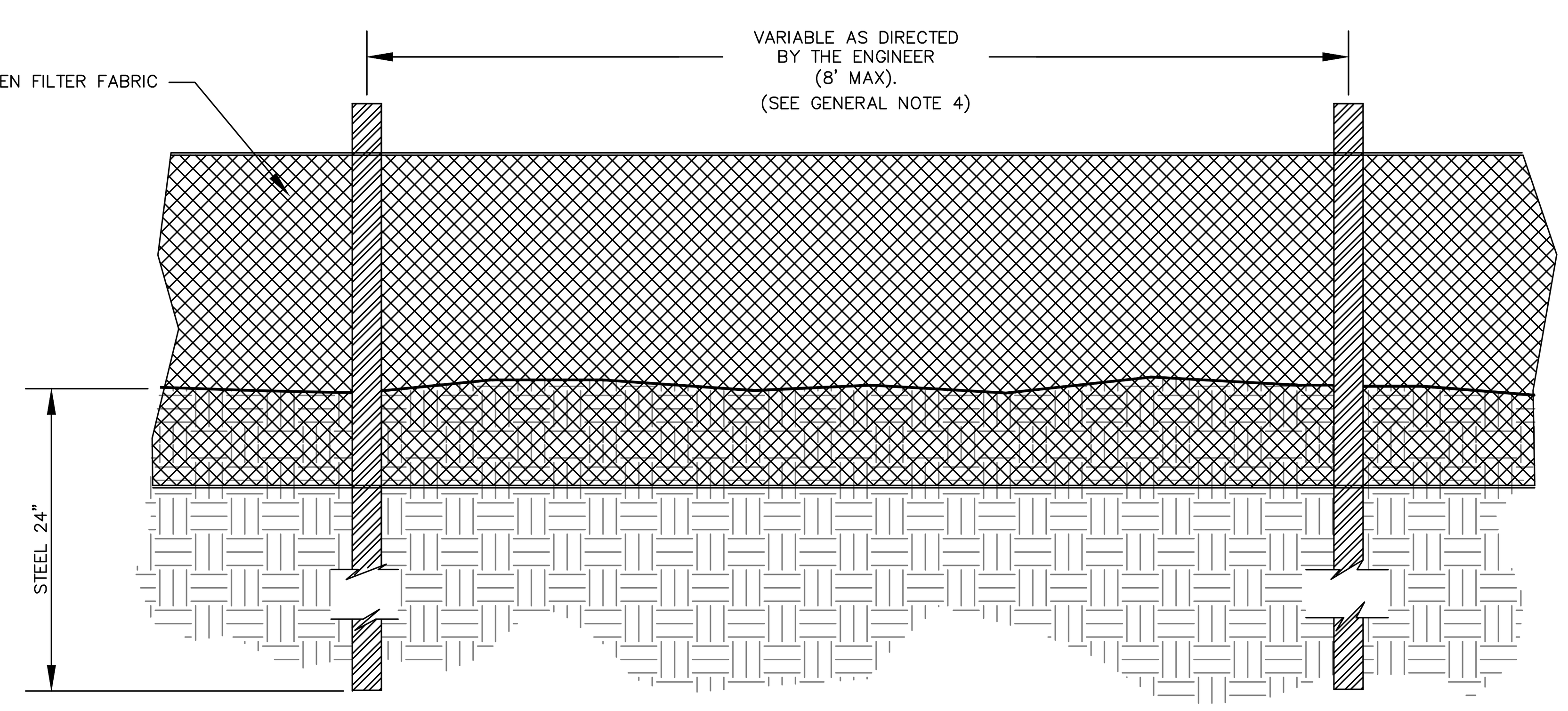

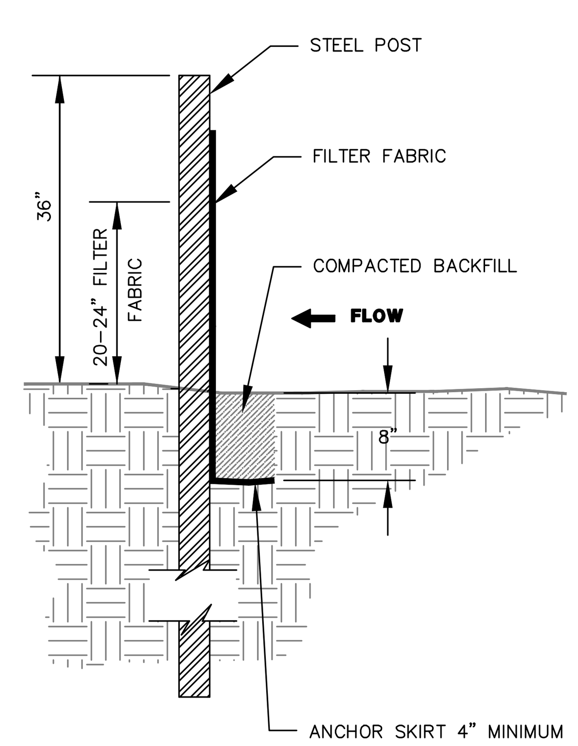

GENERAL NOTES:

1. PREFABRICATED SILT FENCE IS NOT ACCEPTABLE ON THIS PROJECT.
2. STEEL POSTS SHALL BE USED ON THIS PROJECT INSTEAD OF WOOD POSTS. STEEL POSTS SHALL BE 5'–0" IN HEIGHT AND BE OF THE SELF–FASTENER ANGLE STEEL TYPE.
3. WOVEN FILTER FABRIC SHALL BE USED WHERE SILT FENCE IS TO REMAIN FOR A PERIOD OF MORE THAN 30 DAYS. FILTER FABRIC FENCE SHALL BE A MINIMUM OF 32" IN WIDTH AND SHALL HAVE A MINIMUM OF 6 LINE WIRES WITH 12" STAY SPACING.
4. SILT FENCE SHALL BE STANDARD STRENGTH FILTER FABRIC WITH WIRE MESH REINFORCEMENT OR EXTRA STRENGTH FILTER FABRIC. WHEN FABRIC IS USED WITH WIRE MESH, 8' CENTERED POSTS MAY BE USED. OMISSION OF THE REINFORCING WIRE IS A CONSTRUCTION CHANGE THAT NECESSITATES MORE POSTS FOR SUPPORT (IE. THE SPACING DISTANCE NEEDS TO BE REDUCED TO NO GREATER THAN SIX (6) FEET APART).
5. TURN SILT FENCE UP SLOPE AT ENDS.
6. THE USE OF SILT FENCE IN AREAS OF CONCENTRATED FLOW IS INAPPROPRIATE.

MAINTENANCE NOTES:

1. INSPECT SILT FENCES AT LEAST ONCE A WEEK AND AFTER EACH SIGNIFICANT (0.5" OR GREATER) RAINFALL. MAKE ANY REQUIRED REPAIRS IMMEDIATELY.
2. SHOULD THE FABRIC OF A SILT FENCE COLLAPSE, TEAR, DECOMPOSE OR BECOME INEFFECTIVE, REPLACE IT IMMEDIATELY.
3. REMOVE SEDIMENT DEPOSITS AS NECESSARY TO PROVIDE ADEQUATE STORAGE VOLUME FOR THE NEXT RAIN AND TO REDUCE PRESSURE ON THE FENCE. TAKE CARE TO AVOID UNDERMINING THE FENCE DURING CLEANOUT.
4. REMOVE ALL FENCING MATERIALS AND UNSTABLE SEDIMENT DEPOSITS AND BRING THE AREA TO GRADE AND STABILIZE IT AFTER THE CONTRIBUTING DRAINAGE AREA HAS BEEN PROPERLY STABILIZED.

*REF: 6.62.7 NC Erosion and Sediment Control Planning and Design Manual, 2006

10 / D2 SILT FENCE - AS NEEDED
SCALE: 1" = 1'

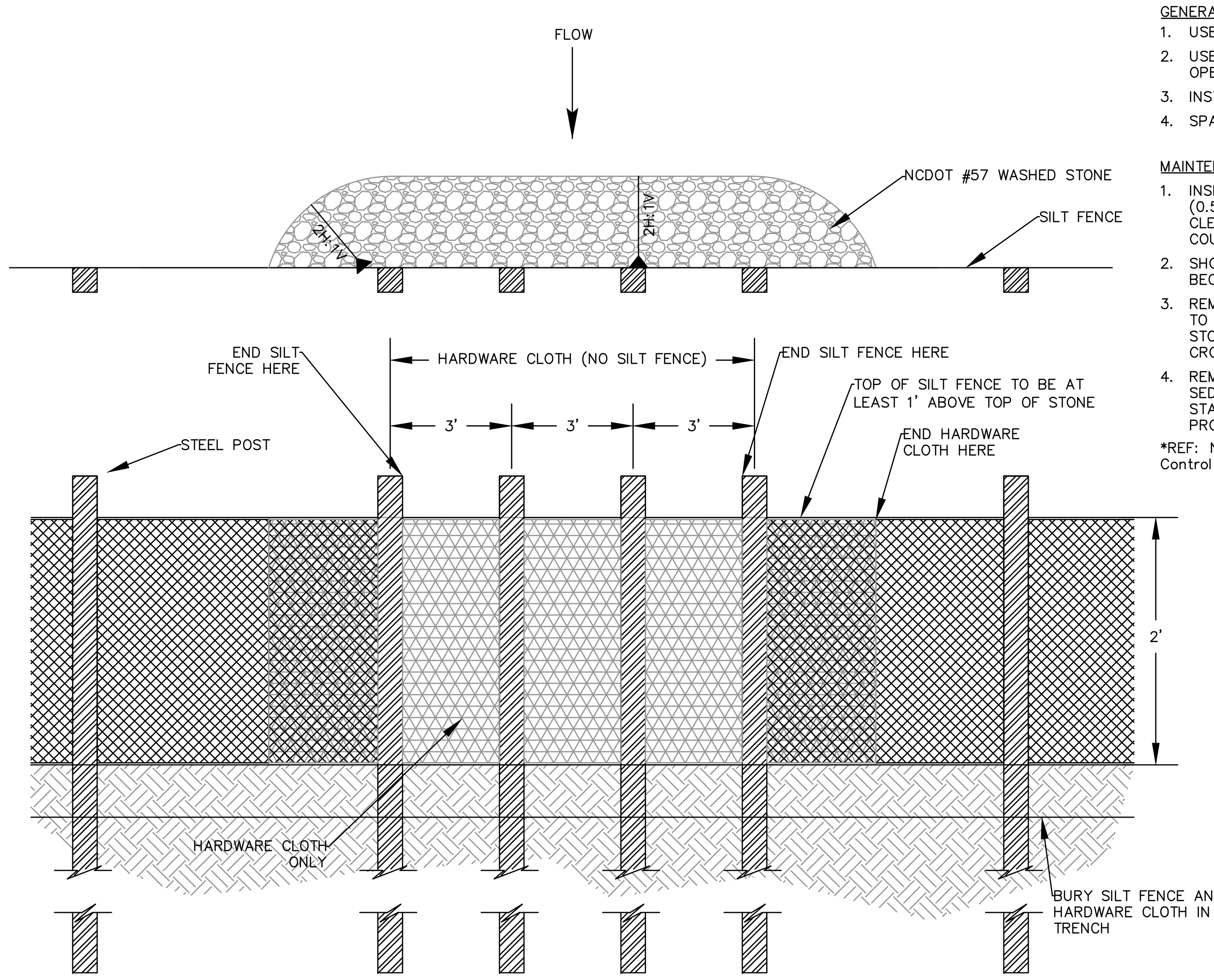

GENERAL NOTES:

1. USE NO. 5 OR NO. 57 STONE FOR SEDIMENT CONTROL
2. USE HARDWARE CLOTH 24 GAUGE WIRE MESH WITH ¼" MESH OPENINGS.
3. INSTALL 5' SELF FASTENER ANGLE STEEL POST 2' DEEP MINIMUM
4. SPACE POSTS A MAXIMUM OF 3'.

MAINTENANCE NOTES:

1. INSPECT OUTLETS AT LEAST WEEKLY AND AFTER EACH SIGNIFICANT (0.5" OR GREATER) RAINFALL EVENT AND REPAIR IMMEDIATELY. CLEAN OUT SEDIMENT, STRAW, LIMBS, OR OTHER DEBRIS THAT COULD CLOG THE OUTLET WHEN NEEDED.
2. SHOULD THE FABRICS OF THE OUTLET COLLAPSE, TEAR, OR BECOME INEFFECTIVE REPLACE THEM PROMPTLY.
3. REMOVE SEDIMENT ACCUMULATED BEHIND THE OUTLET AS NEEDED TO PREVENT DAMAGE SILT FENCE AND OUTLET MEASURES. ADD STONE TO OUTLET AS NEEDED TO MAINTAIN DESIGN HEIGHT AND CROSS SECTION.
4. REMOVE ALL FENCING AND OUTLET MATERIALS AND UNSTABLE SEDIMENT DEPOSITS AND BRING THE AREA TO GRADE AND STABILIZE IT AFTER THE CONTRIBUTING DRAINAGE AREA HAS BEEN PROPERLY STABILIZED.

*REF: NC DOT Roadway Standard Detail 1606.01 – Special Sediment Control Fence, 2006

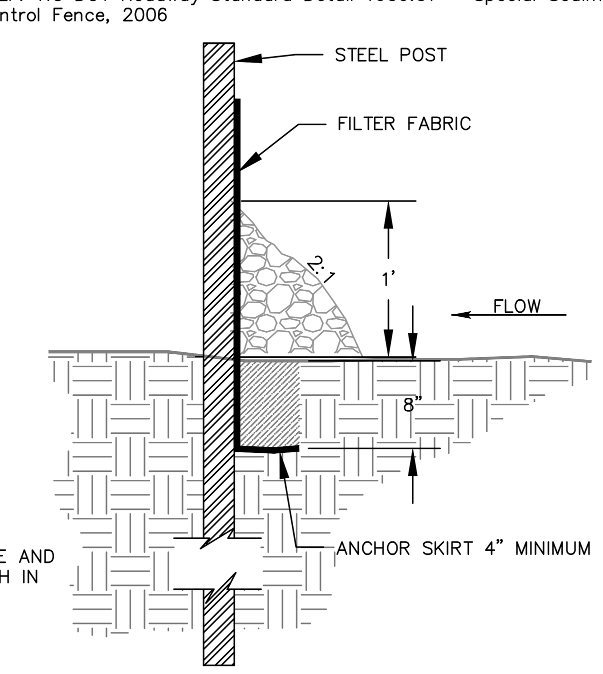

11 / D2 SILT FENCE OUTLET - AS NEEDED
SCALE: 1" = 1'

- ISSUED FOR CONSTRUCTION -

9751 SOUTHERN PINE BLVD.
CHARLOTTE, N.C. 28273
(704)523–4726
WWW.SMEINC.COM

NORTH CAROLINA PROFESSIONAL ENGINEER SEAL 032153 KENNETH R. DALY

NO.	DATE	DESCRIPTION	BY
0	6–6–11	ISSUED FOR CONSTRUCTION	KRD

E & S CONTROL DETAILS 1
PINE HALL ROAD ASH LANDFILL

BELEWS CREEK STEAM STATION
BELEWS CREEK, NORTH CAROLINA

ENGINEERING LICENSE NO: **F-0176**

DRAWN BY: CLD	CHECKED BY: KRD
DESIGNED BY: CHR	APPROVED BY:

PROJECT NUMBER 1356–07–017

DUKE ENERGY DRAWING NUMBER TBD

SCALE: AS SHOWN	DATE: 6–6–11
DRAWING: **D2**	OF: **7**

DRAWING PATH: Q:\1356\DUKE ENERGY\07–017 Pinehall Rd CQA__EROSION\Drain Retrofit –BID ISSUE\D2 DETAILS.dwg

DEFINITION:

A STRUCTURE DESIGNED TO CONTROL EROSION AT THE OUTLET OF A CHANNEL OR CONDUIT.

PURPOSE:

TO PREVENT EROSION AT THE OUTLET OF A CHANNEL OR CONDUIT BY REDUCING THE VELOCITY OF FLOW AND DISSIPATING THE ENERGY.

CONSTRUCTION SPECIFICATIONS:

1. ENSURE THAT THE SUBGRADE FOR THE FILTER AND RIPRAP FOLLOWS THE REQUIRED LINES AND GRADES SHOWN IN THE PLAN. COMPACT ANY FILL REQUIRED IN THE SUBGRADE TO THE DENSITY OF THE SURROUNDING DISTURBED MATERIAL. LOW AREAS IN THE SUBGRADE ON UNDISTURBED SOIL MAY ALSO BE FILLED BY INCREASING THE RIPRAP THICKNESS.
2. THE RIPRAP AND GRAVEL FILTER MUST CONFORM TO THE SPECIFIED GRADING LIMITS SHOWN ON THE PLANS.
3. FILTER CLOTH, WHEN USED, MUST MEET DESIGN REQUIREMENTS AND BE PROPERLY PROTECTED FROM PUNCHING OR TEARING DURING INSTALLATION. REPAIR ANY DAMAGE BY REMOVING THE RIPRAP AND PLACING ANOTHER PIECE OF FILTER CLOTH OVER THE DAMAGED AREA. ALL CONNECTING JOINTS SHOULD OVERLAP SO THE TOP LAYER IS ABOVE THE DOWNSTREAM LAYER A MINIMUM OF 1 FT. IF THE DAMAGE IS EXTENSIVE, REPLACE THE ENTIRE FILTER CLOTH.
4. RIPRAP MAY BE PLACED BY EQUIPMENT, BUT TAKE CARE TO AVOID DAMAGING THE FILTER.
5. THE MINIMUM THICKNESS OF THE RIPRAP SHOULD BE 1.5 TIMES THE MAXIMUM STONE DIAMETER.
6. RIPRAP SHALL BE NCDOT RIPRAP CLASS AS SPECIFIED OR APPROVED EQUIVALENT. IT SHOULD BE HARD, ANGULAR, HIGHLY WEATHER-RESISTANT AND WELL GRADED.
7. CONSTRUCT THE APRON ON ZERO GRADE WITH NO OVERFILL AT THE END. MAKE THE TOP OF THE RIPRAP AT THE DOWNSTREAM END LEVEL WITH THE RECEIVING AREA OR SLIGHTLY BELOW IT.
8. ENSURE THAT THE APRON IS PROPERLY ALIGNED WITH THE RECEIVING STEAM AND PREFERABLY STRAIGHT THROUGHOUT ITS LENGTH. IF A CURVE IS NEEDED TO FIT SITE CONDITIONS, PLACE IN THE UPPER SECTION OF THE APRON.
9. IMMEDIATELY AFTER CONSTRUCTION, STABILIZE ALL DISTURBED AREAS WITH VEGETATION.

MAINTENANCE:

INSPECT RIPRAP OUTLET STRUCTURES WEEKLY AND AFTER SIGNIFICANT (0.5 INCH OR GREATER) RAINFALL EVENTS TO SEE IF ANY EROSION AROUND OR BELOW THE RIPRAP HAS TAKEN PLACE, OR IF STONES HAVE BEEN DISLODGED. IMMEDIATELY MAKE ALL NEEDED REPAIRS TO PREVENT FURTHER DAMAGE.

REFERENCE:

6.41.5 NC EROSION AND SEDIMENTATION CONTROL PLANNING AND DESIGN MANUAL, 2006

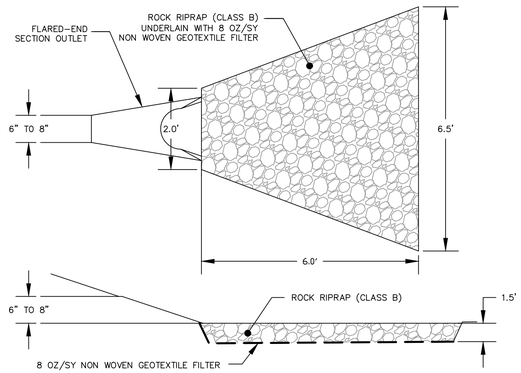

12 D3 **RIP RAP APRON DETAIL**
SCALE: NTS

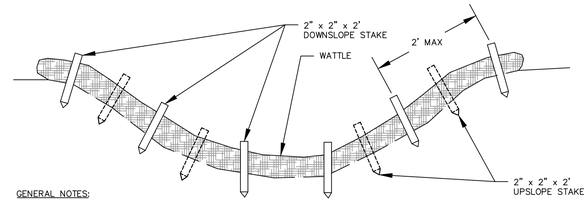

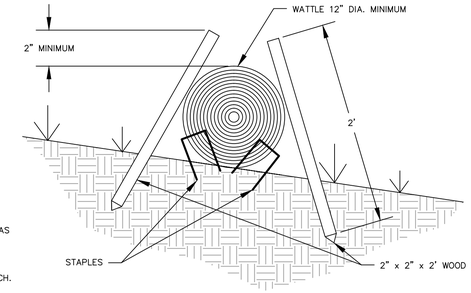

GENERAL NOTES:

1. PLACE WATTLES AT THE LOWER LIMITS OF EACH DAYS WORK.
2. PLACE WATTLES ACCORDING TO CHANNEL SCHEDULE
3. PLACE FIRST WATTLE 1/2 SPACING DISTANCE FROM CREST OF QUALIFYING SLOPE.
4. ONLY INSTALL WATTLE(S) TO A HEIGHT IN DITCH SO FLOW WILL NOT WASH AROUND WATTLE AND SCOUR DITCH SLOPES AND AS DIRECTED.
5. SPACE WOODEN STAKES 2 FEET O.C. ALONG DITCH SLOPE.
6. INSTALL A MINIMUM OF 2 UPSLOPE STAKES AND 4 DOWNSLOPE STAKES AT AN ANGLE TO WEDGE WATTLE TO BOTTOM OF DITCH.
7. PROVIDE STAPLES MADE 0.125 IN. DIAMETER STEEL WIRE FORMED INTO A U-SHAPE NOT LESS THAN 12" IN LENGTH.
8. INSTALL STAPLES APPROXIMATELY EVERY 1 LINEAR FOOT ON BOTH SIDES OF WATTLE AND EACH END TO SECURE IT TO SOIL.

MAINTENANCE NOTES:

1. IT IS IMPERATIVE THAT WATTLES BE INSPECTED AFTER INSTALLATION AND SIGNIFICANT (0.5" OR GREATER) RAINFALL EVENTS.
2. THERE ARE TO BE NO GAPS BETWEEN ADJACENT WATTLES OR BETWEEN SOIL SURFACE AND WATTLE BOTTOM.
3. REPAIR ANY UPSLOPE OR UNDERCUTTING DEFICIENCIES FOR PROPER PERFORMANCE.
4. REMOVE ALL FILTRATION IMPEDIMENTS INCLUDING SEDIMENT DEPOSITS AND LOOSE DEBRIS WHEN SUCH CONDITIONS IMPACT WATTLE FUNCTIONALITY.
5. SEDIMENT BUILD UP SHOULD NOT BE ALLOWED TO EXCEED ONE THIRD OF WATTLE HEIGHT.
6. MONITOR CHANGING CONDITIONS TO ANTICIPATE WATTLE REMOVAL OR REPLACEMENT.

*REF: NCDOT ROADSIDE ENVIRONMENTAL UNIT: SOIL AND WATER SECTION

13 D3 **WATTLE DETAIL**
SCALE: NTS

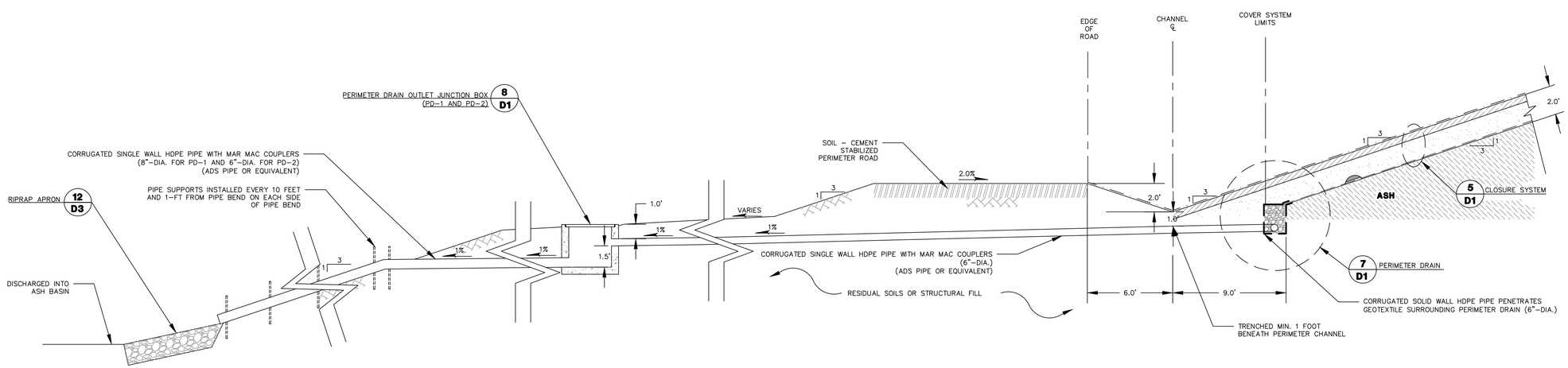

14 D3 **PERIMETER DRAIN OUTLET**
SCALE: NTS

- ISSUED FOR CONSTRUCTION -

Duke Energy®

S&ME
9751 SOUTHERN PINE BLVD.
CHARLOTTE, N.C. 28273
(704)523-4726
WWW.SMEINC.COM

NORTH CAROLINA PROFESSIONAL SEAL 032153 ENGINEER KENNETH R. DALY

NO.	DATE	DESCRIPTION	BY
0	6-6-11	ISSUED FOR CONSTRUCTION	KRD

E & S CONTROL DETAILS 2
PINE HALL ROAD ASH LANDFILL

BELEWS CREEK STEAM STATION
BELEWS CREEK, NORTH CAROLINA

ENGINEERING LICENSE NO: F-0176

DRAWN BY: CLD	CHECKED BY: KRD
DESIGNED BY: CHR	APPROVED BY:

PROJECT NUMBER 1356-07-017

DUKE ENERGY DRAWING NUMBER TBD

SCALE: AS SHOWN	DATE: 6-6-11
DRAWING: D3	OF: 7

DRAWING PATH: G:\1356\DUKE ENERGY\07-017 Pinehall Rd CCR___EROSION\Drain Retrofit -BID ISSUE\D2 DETAILS.dwg

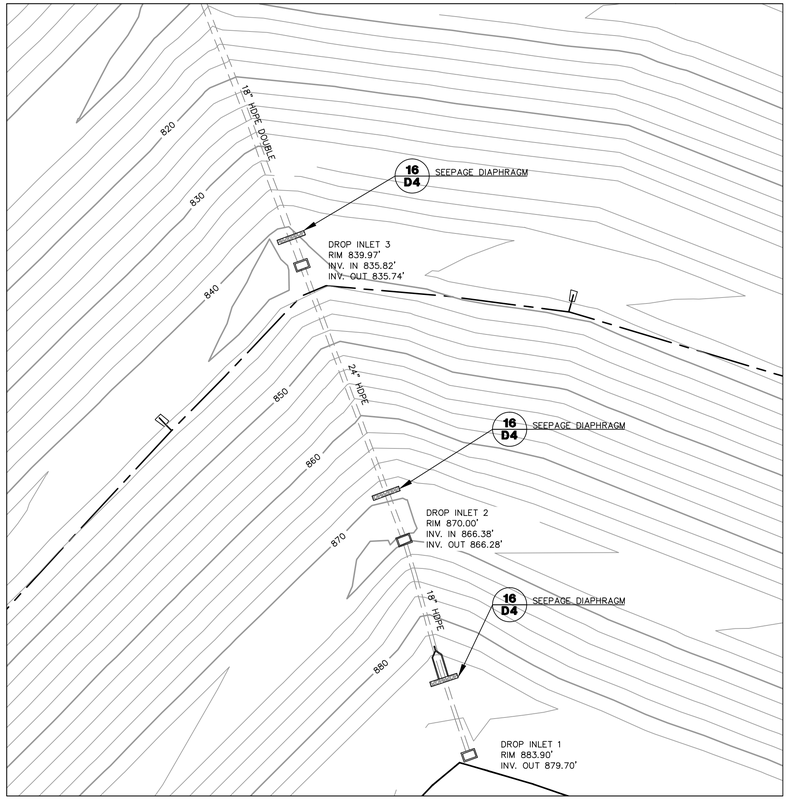

15 D4 DOWN DRAIN RETROFIT
SCALE: 1" = 30'

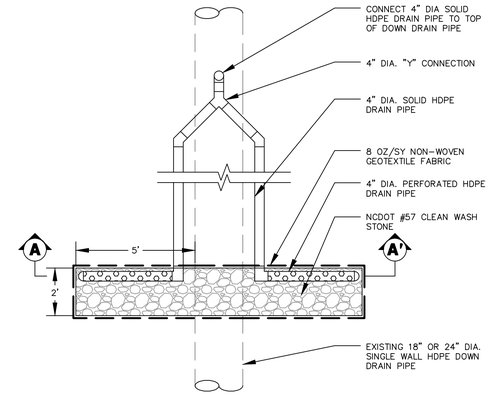

PLAN VIEW

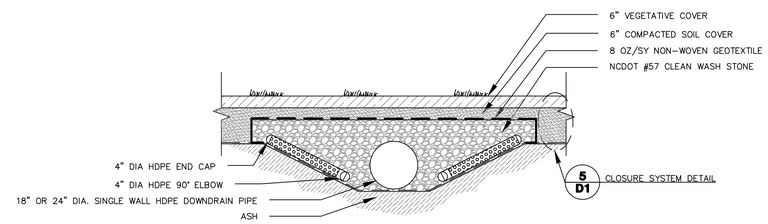

SECTION VIEW A - A'

16 D4 SEEPAGE DIAPHRAGM
SCALE: 1" = 3'

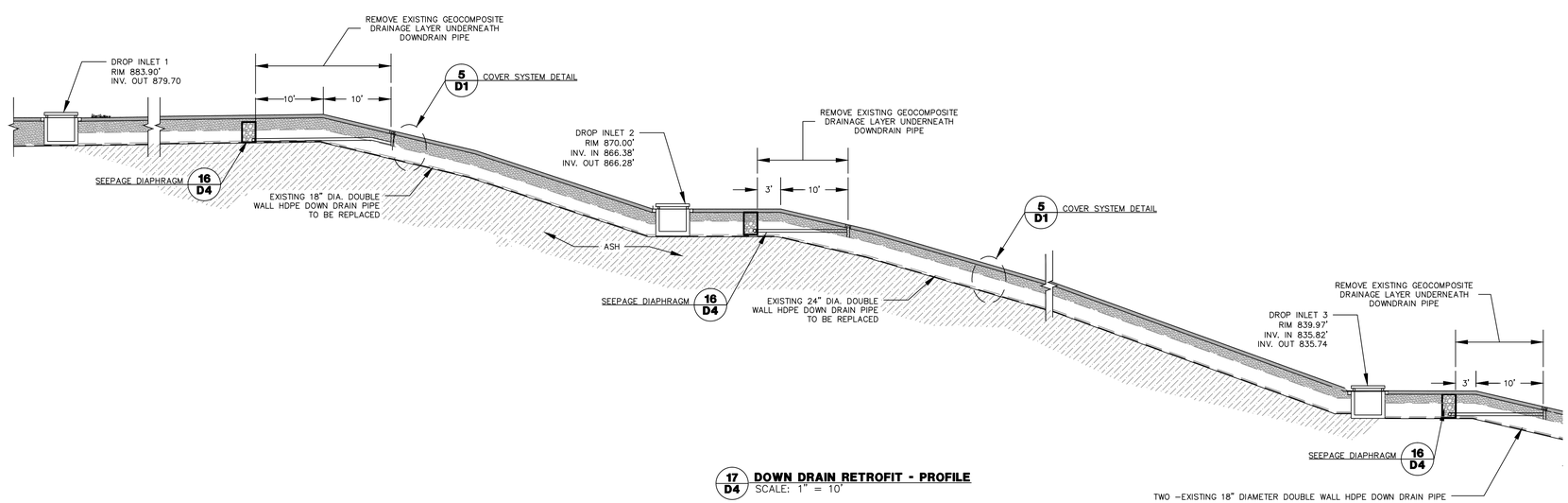

17 D4 DOWN DRAIN RETROFIT - PROFILE
SCALE: 1" = 10'

- ISSUED FOR CONSTRUCTION -

Duke Energy ©

9751 SOUTHERN PINE BLVD.
CHARLOTTE, N.C. 28273
(704)523-4726
S&ME
WWW.SMEINC.COM

NORTH CAROLINA PROFESSIONAL SEAL 032153 ENGINEER KENNETH R. DALY

NO.	DATE	DESCRIPTION	BY
1	6-7-11	SEEPAGE DIAPHRAGM CHANGE	KRD
0	6-6-11	ISSED FOR CONSTRUCTION	KRD

DOWN DRAIN RETROFIT
PINE HALL ROAD ASH LANDFILL

BELEWS CREEK STEAM STATION
BELEWS CREEK, NORTH CAROLINA

ENGINEERING LICENSE NO: F-0176

DRAWN BY: CLD
CHECKED BY: KRD
DESIGNED BY: CHR
APPROVED BY:

PROJECT NUMBER: 1356-07-017

DUKE ENERGY DRAWING NUMBER: TBD

SCALE: AS SHOWN
DATE: 6-6-11

DRAWING: D4
OF: 7

DRAWING PATH: G:\1356\DUKE ENERGY\07-017 Pineal Rd CCR__EROSION\Drain Retrofit -BID ISSUE\D4.dwg

Issued for Construction Specifications

TECHNICAL SPECIFICATIONS
PINE HALL ROAD ASH LANDFILL CLOSURE
COVER SYSTEM RETROFIT

ISSUED FOR CONSTRUCTION

DUKE ENERGY - BELEWS CREEK STEAM STATION
BELEWS CREEK, NORTH CAROLINA

S&ME Project No. 1356-07-017 Phase 05

Prepared for:

3195 Pine Hall Road
Belews Creek, NC 27009

Prepared by:

S&ME, Inc.

9751 Southern Pine Boulevard
Charlotte, North Carolina 28273

June 2011

TECHNICAL SPECIFICATIONS
TABLE OF CONTENTS

DIVISION 1 - GENERAL REQUIREMENTS

01000	General Requirements

DIVISION 2 - SITE CONSTRUCTION

02060	Aggregate
02230	Site Clearing
02315	Excavation
02320	Backfill - Structural
02324	Trenching
02374	Erosion Control Devices
02500	High Density Polyethylene (HDPE) Piping and Miscellaneous Items
02620	Perimeter Drain
02672	Linear Low Density Polyethylene (LLDPE) Geomembrane
02673	Woven Geotextiles
02674	Nonwoven Geotextiles
02675	Geocomposite Drainage Layer
02924	Seeding and Soil Supplements

DIVISION 3 – CONCRETE

03400	Pre-Cast Concrete Structures

SECTION 01000
GENERAL REQUIREMENTS

PART 1 GENERAL

1.1 SUMMARY

A. Section Includes:
1. Summary of Work
   a. Project Summary
   b. Engineer Responsibilities
   c. Contractor and Subcontractor Qualifications
   d. Work Sequence and Schedule

2. Price Payment
   a. Change Procedures.
   b. Defect Assessment
   c. Unit Prices

3. Administrative Requirements
   a. Submittal Procedures

4. Quality Requirements
   a. Quality Control and Control of Installation
   b. Tolerances
   c. Testing and Observation Requirements

5. Temporary Facility Controls
   a. Temporary Controls

6. Product Requirements
   a. Product Substitution Procedures

7. Execution Requirements
   a. Closeout Procedures
   b. Project Record Documents

PART 2 SUMMARY OF WORK

2.1 PROJECT SUMMARY

A. Project description: this project involves installing the proposed perimeter drain and constructing other cover system maintenance items.

B. Work Description: Work includes and consists of furnishing all labor, materials, supervision, equipment and services necessary to complete the project construction as indicated in the Specifications, Drawings, and Bid Worksheet for construction. The work will include:

1. installing required erosion and sedimentation control (E&SC) measures;
2. clearing, grubbing, and preparing the borrow area;

3. stripping and topsoil stockpiling at the borrow area;
4. constructing the perimeter drain including restoring the cover system to design grades;
5. on an as-needed basis restoring perimeter access road damaged by construction activities;
6. removing and disposing of sediment from channel C7 located northeast of the landfill and restoring channel geometry and lining;
7. constructing select cover system maintenance items including:
   a. repairing an erosion rill along channel B2 on the southeastern top deck and re-grading the channel in the selected area;
   b. removing existing rip-rap check dams and restoring grades at select locations within Channel C6 on the southeastern landfill perimeter; and
   c. modifying the stormwater system down drain pipes from Drop Inlet 1 through to Drop Inlet 3.
8. seeding and site stabilization after landfill construction.

C. Perform Work of Contract under stipulated sum with Owner in accordance with Conditions of Contract.

D. Work of Contract shall be constructed to the lines and elevations as shown on the Drawings and as identified in these Specifications. Any deviations from the Drawings or Specifications require the prior written approval of the ENGINEER and must be documented by "as-built" revisions to the Drawings and/or Specifications.

E. During phases of construction, construction will be tested, monitored, and evaluated prior to approval.

2.2 ENGINEER RESPONSIBILITIES

A. Engineer will be Owner's representative during the construction period. The duties and responsibilities and the limitations of authority of Engineer as Owner's representative during construction are set forth as follows and will not be changed without written consent of Owner and Engineer.
1. Neither Engineer's authority or responsibility under this Section or under any other provision of the Contract Documents nor any decision made by Engineer in good faith either to exercise or not exercise such authority or responsibility or the undertaking, exercise, or performance of any authority or responsibility by Engineer shall create, impose, or give rise to any duty in contract, tort, or otherwise owed by Engineer to Contractor, any Subcontractor, any Supplier, any other individual or entity, or to any surety for or employee or agent of any of them.
2. Engineer will not supervise, direct, control, or have authority over or be responsible for Contractor's means, methods, techniques, sequences, or procedures of construction, or the safety precautions and programs incident thereto, or for any failure of Contractor to comply with Laws and Regulations applicable to the performance of the Work. Engineer will not be responsible for Contractor's failure to perform the Work in accordance with the Contract Documents.
3. Engineer will not be responsible for the acts or omissions of Contractor or of any Subcontractor, any Supplier, or of any other individual or entity performing any of the Work.
4. Engineer's review of the final Application for Payment and accompanying documentation and all maintenance and operating instructions, schedules, guarantees, bonds, certificates of inspection, tests and approvals, and other documentation required to be delivered by the Contract Documents will only be to determine generally that their content complies with the requirements of, and in the case of certificates of inspections, tests, and approvals that the results certified indicate compliance with the Contract Documents.
5. The limitations upon authority and responsibility set forth in this Section shall also apply to the Resident Project Representative, if any, and assistants, if any.

2.3 CONTRACTOR AND SUBCONTRACTOR QUALIFICATIONS

A. General Contractor (Contractor AND Subcontractor):
   1. The Contractor AND Subcontractor must be qualified and experienced in construction work.

B. Surveyor:
   1. All field layouts shall be performed by or under the supervision of a licensed Professional Land Surveyor registered in the state where the Work is to be conducted. The Contractor shall establish and maintain a minimum of two permanent benchmarks. Horizontal and vertical locations of the benchmarks shall be recorded on the As-Built Drawings.

2.4 WORK SEQUENCE AND SCHEDULE

A. General Order of Construction. During and prior to construction period, coordinate construction schedule and operations with Owner, Engineer, and any other applicable parties.

B. The work sequence shall generally follow the work description summarized in Part 2.1, and shall be consistent with the work sequences identified in the Erosion and Sediment Control Plan and permit.

C. The Contractor shall submit a schedule in an electronic format agreeable to the Owner.

D. Specific schedule format shall include activities, start date, finish date, duration, activity logic (predecessor and successor activities), percent progress, and milestones.

E. The schedule calendar shall be depicted with defined work hours i.e. five ten-hour days.

F. The Contractor shall submit a proposed project schedule with their bids and a final project schedule within 15 days of award.

G. The schedule shall include at least the following activities:
   1. Mobilize and Personnel Training
   2. Install E&SC Measures
   3. Clearing and Grubbing
   4. Preparing the Borrow Area
   5. Stripping and Topsoil Stockpiling at the Borrow Area;
   6. Constructing Perimeter Drain
   7. Clean and Repair Channel C7
   8. Repair Channel B2
   9. Repair Channel C6
   10. Modify Down Drain Pipes
   11. Site Stabilization
   12. Site Cleanup
   13. Demobilization

H. The Contractor shall update the project schedule after award of contract and through demobilization on a monthly basis and as otherwise requested by the Owner. Additional updates may be required at the Owner's request to monitor recovery plans for critical path work.

PART 3 PRICE PAYMENT

3.1 CHANGE PROCEDURES

A. Submittals: Submit name of individual authorized to receive change documents, and be responsible for informing others in Contractor's employ or Subcontractors of changes to the Work.

B. The Engineer will advise of minor changes in the Work not involving adjustment to Contract Sum/Price or Contract Time.

C. The Engineer may issue a Notice of Change including a detailed description of proposed change with supplementary or revised Drawings and specifications, a change in Contract Time for executing the change, and the period of time during which the requested price will be considered valid. Contractor will prepare and submit estimate within three days.

D. Contractor may propose changes by submitting a request for change to Engineer, describing proposed change and its full effect on the Work. Include a statement describing reason for the change, and effect on Contract Sum/Price and Contract Time with full documentation and a statement describing effect on Work by separate or other Contractors. Document requested substitutions in accordance with Part 7 of this Specification.

E. Work Directive Change: Engineer may issue directive instructing Contractor to proceed with change in the Work, for subsequent inclusion in a Change Order. Document will describe changes in the Work, and designate method of determining any change in Contract Sum/Price or Contract Time. Promptly execute change.

3.2 DEFECT ASSESSMENT

A. Replace the Work, or portions of the Work, not conforming to specified requirements.

B. If, in the opinion of the Engineer and/or Owner, it is not practical to remove and replace the Work, the Engineer will direct appropriate remedy or adjust payment.

C. Individual specification sections may modify these options or may identify specific formula or percentage sum/price reduction.

D. Authority of Engineer and/or Owner to assess defects and identify payment adjustments is final.

E. Non-Payment For Rejected Products: Payment will not be made for rejected products for any of the following:
1. Products wasted or disposed of in a manner that is not acceptable.
2. Products determined as unacceptable before or after placement.
3. Products not completely unloaded from transporting vehicle.
4. Products placed beyond lines and levels of required Work.
5. Products remaining on hand after completion of the Work.
6. Loading, hauling, and disposing of rejected products.

3.3 UNIT PRICES

A. Unit Quantities
1. Measurement methods delineated in individual specification sections complement criteria of this section. In event of conflict, requirements of individual specification section govern.
2. Take measurements and compute quantities. Engineer will verify measurements and quantities.

3. Quantities and measurements indicated in Bid Form and/or Contract Documents are for contract purposes only. Quantities and measurements supplied or placed in the Work shall determine payment. Final payment for Work governed by unit prices will be made on basis of actual measurements and quantities accepted by Engineer multiplied by unit sum/price for Work incorporated in or made necessary by the Work.
   a. When actual Work requires more or fewer quantities than those quantities indicated, provide required quantities at unit prices contracted.
   b. When actual Work requires 30 percent or greater change in quantity than those quantities indicated, Owner or Contractor may claim for Contract Price adjustment.

B. Unit Prices
1. Payment Includes: Full compensation for required labor, products, tools, equipment, plant and facilities, transportation, services and incidentals; erection, application or installation of item of the Work; overhead and profit.
2. Specific Item Unit Pricing is delineated in the individual specification sections.
3. Mobilization
   a. Basis of Measurement: By lump sum.
   b. Basis of Payment: Includes mobilization for the project.
4. Surveying
   a. Basis of Measurement: By lump sum.
   b. Basis of Payment: Includes surveying to the locations and grades according to the plans and specifications and providing as-built drawings, and any incidentals in completing the contract. Surveys required to complete as-built drawings shall include, at a minimum, the following:
      1) Restored Subgrade Survey: in areas where work has been conducted to restore and revised subgrade after placement of compacted fill placed to achieve proposed cover system subgrade elevations.
      2) Geomembrane As-Built Drawing: including geomembrane panel corners, changes in panel geometry, and repair locations.
      3) Installed perimeter drain and stormwater piping and structure elevations and locations.
      4) Final Cover Survey: in areas where work has been conducted to restore and revise cover system final grades.

PART 4 ADMINISTRATIVE REQUIREMENTS

4.1 SUBMITTAL PROCEDURES

A. Transmit each submittal with Engineer accepted form.

B. Sequentially number transmittal forms. Mark revised submittals with original number and sequential alphabetic suffix.

C. Identify Project, Contractor, Subcontractor and Supplier; pertinent drawing and detail number, and specification section number, appropriate to submittal.

D. Apply Contractor’s stamp, signed or initialed certifying that review, approval, verification of products required, field dimensions, adjacent construction Work, and coordination of information is in accordance with requirements of the Work and Contract Documents.

E. Identify variations from Contract Documents and product or system limitations, which may be detrimental to successful performance of completed Work.

F. When revised for resubmission, identify changes made since previous submission.

G. Submittals not requested will not be recognized or processed.

PART 5 QUALITY REQUIREMENTS

5.1 QUALITY CONTROL AND CONTROL OF INSTALLATION

A. Monitor quality control over suppliers, manufacturers, products, services, site conditions, and workmanship, to produce Work of specified quality.

B. Comply with manufacturers' and/or supplier's instructions, including each step in sequence.

C. When manufacturers' and/or supplier's instructions conflict with Contract Documents, request clarification from Engineer before proceeding.

D. Comply with specified standards as minimum quality for the Work except where more stringent tolerances, codes, or specified requirements indicate higher standards or more precise workmanship.

E. Perform Work by persons qualified to produce required and specified quality.

F. Verify field measurements are as indicated on Construction Drawings or as instructed by manufacturer.

G. Materials stored off the site shall be stored in a bonded warehouse and shall be clearly marked as being for this project.

5.2 TOLERANCES

A. Monitor fabrication and installation tolerance control of products to produce acceptable Work. Do not permit tolerances to accumulate.

B. Comply with manufacturers' tolerances. When manufacturers' tolerances conflict with Contract Documents, request clarification from Engineer before proceeding.

C. Adjust products to appropriate dimensions; position before securing products in place.

5.3 TESTING AND OBSERVATION REQUIREMENTS

A. Testing and observation services for the purpose of conducting tests shall be performed by the Engineer as required by the Specifications. All costs of testing shall be paid by the Owner. The entity providing the testing and observation services shall be referred to as the construction quality assurance (CQA) agent herein.

B. Testing, observations and source quality control may occur on or off project site. Perform off-site testing as required by Engineer or Owner.

C. Cooperate with CQA agent; furnish samples of materials, equipment, tools, storage, safe access, and assistance by incidental labor as requested.
   1. The Contractor shall give ample advance notice to the CQA agent and Engineer prior to expected time for operations requiring testing services and/or before covering up items that require inspection.

2. Make arrangements with CQA agent and pay for additional samples and tests required for Contractor's use.

D. Testing and employment of testing agency or laboratory shall not relieve Contractor of obligation to perform Work in accordance with requirements of Contract Documents.

E. Re-testing or observation required because of non-conformance to specified requirements shall be performed by same CQA agent on instructions by Engineer. Payment for re-testing will be charged to Contractor by deducting testing charges from Contract Sum/Price.

F. CQA Agent Responsibilities:
1. Provide qualified personnel at site. Cooperate with Engineer and Contractor in performance of services.
2. Perform specified sampling and testing of products in accordance with specified standards.
3. Ascertain compliance of materials with requirements of Contract Documents.
4. Promptly notify Engineer and Contractor of observed irregularities or non-conformance of Work or products.
5. Perform additional tests required by Engineer.
6. Attend preconstruction meetings and progress meetings.

PART 6 TEMPORARY FACILITY CONTROLS

6.1 TEMPORARY CONTROLS

A. Secure Work Area and Equipment
1. The Contractor shall be responsible for securing the working area. Provide barriers to prevent unauthorized entry to construction areas and to protect existing facilities and adjacent properties from damage from construction operations and demolition.
2. The Contractor shall be responsible for securing equipment and construction vehicles. At the end of each working day construction vehicles are to be locked and keys stored in a secure location not inside the construction vehicle.

B. Protection of Work
1. The Contractor shall be responsible for means and methods of stabilizing and protecting exposed work where exposed ash exists from slope deterioration and ash transport due to storm water run-on, storm water run-off, infiltration water, and wind.
2. The Contractor shall provide means and methods to control water, dust, and provide erosion and sediment control measures.
3. Should Contractor decide to leave working areas containing ash open overnight, weekends, or times when work is not in progress the areas shall be protected and stabilized accordingly.

C. Water Control
1. Grade site to drain. Maintain excavations free of water. Provide, operate, and maintain pumping equipment.
2. Provide water barriers as required to protect site from soil erosion according to project's Erosion and Sedimentation Control Plan.

D. Dust Control
1. Execute Work by methods to minimize raising dust from construction operations.
2. Provide positive means to prevent air-borne dust from dispersing into atmosphere.

E. Erosion and Sediment Control
1. Follow project's Erosion and Sedimentation Control Plan.
2. Plan and execute construction by methods to control surface drainage from cuts and fills, from borrow and waste disposal areas. Prevent erosion and sedimentation.
3. Minimize surface area of bare soil exposed at one time.
4. Provide temporary measures including berms, dikes, and drains, and other devices to prevent water flow across disturbed areas.
5. Construct fill and waste areas by selective placement to avoid erosive surface.
6. Periodically inspect earthwork to detect evidence of erosion and sedimentation; promptly apply corrective measures.

PART 7 PRODUCT REQUIREMENTS

7.1 PRODUCT SUBSTITUTION PROCEDURES

A. Substitutions may be considered when a product becomes unavailable through no fault of Contractor.

B. Document each request with complete data substantiating compliance of proposed Substitution with Contract Documents.

C. Substitutions will not be considered when they are indicated or implied on Shop Drawing or Product Data submittals, without separate written request, or when acceptance will require revision to Contract Documents.

D. Document each request with complete data substantiating compliance of proposed Substitution with Contract Documents.

E. A request constitutes a representation that Contractor:
1. Has investigated proposed product and determined that it meets or exceeds quality level of specified product.
2. Will provide same warranty for Substitution as for specified product.
3. Will coordinate installation and make changes to other Work which may be required for the Work to be complete with no additional cost to Owner.
4. Waives claims for additional costs or time extension which may subsequently become apparent.
5. Will reimburse Owner and/or Engineer for review or redesign services associated with re-approval by authorities having jurisdiction.

F. Substitutions will not be considered when they are indicated or implied on Shop Drawing or Product Data submittals, without separate written request, or when acceptance will require revision to Contract Documents.

G. Substitution Submittal Procedure:
1. Submit three copies of request for Substitution for consideration. Limit each request to one proposed Substitution.
2. Submit Shop Drawings, Product Data, and certified test results attesting to proposed product equivalence. Burden of proof is on proposer.
3. Engineer will notify Contractor in writing of decision to accept or reject request.

PART 8 EXECUTION REQUIREMENTS

8.1 CLOSEOUT PROCEDURES

A. Final Application for Payment shall be accompanied by the following documents:

1. Record Drawings (reproducible).
2. Guarantees of all materials and workmanship.
3. Contractor's Affidavit, Release and Waiver of Claims.
4. Consent of Surety (if applicable).
5. Final State/County Sales/Use Tax Statement (if applicable).
6. Complete list of all Subcontractors and areas of work performed.
7. Proof of Compliance with Building Standards.
8. MWBE Documentation of Final Contract Payments (if applicable).

8.2 PROJECT RECORD DOCUMENTS

A. Maintain on site one set of the following record documents; record actual revisions to the Work:
1. Drawings.
2. Specifications.
3. Addenda.
4. Change Orders and other modifications to the Contract.
5. Reviewed Shop Drawings, Product Data, and Samples.
6. Manufacturer's instruction for assembly, installation, and adjusting.

B. Ensure entries are complete and accurate, enabling future reference by Owner.

C. Store record documents separate from documents used for construction.

D. Record information concurrent with construction progress, not less than weekly. For each item, include percentage of work complete versus percentage of work invoiced.

E. Specifications: Legibly mark and record at each product section description of actual products installed, including the following:
1. Manufacturer's name and product model and number.
2. Product substitutions or alternates utilized.
3. Changes made by Addenda and modifications.

F. Record Drawings: Legibly mark each item to record actual construction including:
1. Measured depths of foundations in relation to finish floor datum.
2. Measured horizontal and vertical locations of underground utilities and appurtenances, referenced to permanent surface improvements.
3. Measured locations of internal utilities and appurtenances concealed in construction, referenced to visible and accessible features of the Work.
4. Field changes of dimension and detail.
5. Details not on original Contract drawings.

G. Submit documents to Engineer.

END OF SECTION

SECTION 02060
AGGREGATE

PART 1 GENERAL

1.1 SUMMARY

A. Section Includes:
1. Aggregate Type A1 – ABC stone for roadways.
2. Aggregate Type A2 – No. 57 stone for drainage aggregate and erosion and sediment control structures.
3. Aggregate Type A3 – Class B riprap for erosion and sediment control structures.

B. Description of Work:
1. Aggregate Type A1 – ABC stone for roadways: includes supplying aggregate materials for replacement of existing roadway damaged during other construction. Existing roadways shall only be replaced as directed by the Owner.
2. Aggregate Type A2 – No. 57 stone for drainage aggregate and erosion and sediment control structures: Includes supplying aggregate materials, hauling, stockpiling, and placement.
3. Aggregate Type A3 – Class B riprap for erosion and sediment control structures: Includes supplying aggregate materials, hauling, stockpiling, and placement.

C. Related Sections:
1. Section 02374 – Erosion Control Devices.
2. Section 02500 – High Density Polyethylene (HDPE) Piping and Miscellaneous Items.
3. Section 02620 – Perimeter Drain.

1.2 UNIT PRICE - MEASUREMENT AND PAYMENT

A. Payments will be made to the Contractor in accordance with the specified method of measurement and the unit or lump sum prices stipulated in the accepted Bid.

B. This method of payment will constitute complete compensation for all work required by the Contract Documents.

1.3 REFERENCES

A. American Association of State Highway and Transportation Officials:
1. AASHTO T11 – Standard Method of Test for Materials Finer than 75 μm (No. 200) Sieve in Mineral Aggregates by Washing.
2. AASHTO T27 – Standard Method of Test for Sieve Analysis of Fine and Coarse Aggregates.
3. AASHTO T180 – Standard Method of Test for Moisture-Density Relations of Soils Using a 4.54-kg (10-lb) Rammer and a 457-mm (18-in.) Drop (as modified by NCDOT).

B. ASTM International:
1. ASTM C33 – Standard Specification for Construction Aggregates
2. ASTM C136 – Standard Test Method for Sieve Analysis of Fine and Coarse Aggregate.
3. ASTM D421 – Standard Practice for Dry Preparation of Soil Samples for Particle-Size Analysis and Determination of Soil Constants.
4. ASTM D422 – Standard Test Method for Particle Size Analysis of Soils.

5. ASTM D698 - Standard Test Methods for Laboratory Compaction Characteristics of Soil Using Standard Effort (12 400 ft-lbf/ft^3 (600 kN-m/m^3)).
6. ASTM D1556 – Standard Test Method for Density and Unit Weight of Soil in Place by the Sand-Cone Method.
7. ASTM D1557 - Test Methods for Moisture-Density Relations of Soils and Soil-Aggregate Mixtures, Using 10 lb Rammer and 18 inch Drop.
8. ASTM D2167 - Standard Test Method for Density and Unit Weight of Soil in Place by the Rubber Balloon Method.
9. ASTM D2922 - Standard Test Methods for Density of Soil and Soil-Aggregate in Place by Nuclear Methods (Shallow Depth).
10. ASTM D3017 - Standard Test Method for Water Content of Soil and Rock in Place by Nuclear Methods (Shallow Depth).
11. ASTM D4253 – Standard Test Methods for Maximum Index Density and Unit Weight of Soils Using a Vibratory Table.
12. ASTM D4254 – Standard Test Method for Minimum Index Density and Unit Weight of Soils and Calculation of Relative Density.

C. North Carolina Department of Transportation (NCDOT) Standard specifications for Roads and Structures.

1.4 SUBMITTALS

A. Materials Source: Submit name of imported materials suppliers and description of material.

B. Manufacturer's/Supplier's Certificate: Certify materials meet or exceed specified requirements.

C. For aggregate types A1, submit supplier's modified Proctor curve information.

D. Requested payment quantities will be submitted by the Contractor with final approval by the Engineer.

1.5 QUALITY ASSURANCE

A. Furnish each aggregate material type from single source throughout the Work.

B. Perform Work in accordance with North Carolina Department of Transportation Standard Specifications for Roads and Structures or as otherwise specified.

PART 2 PRODUCTS

2.1. FINE AND COARSE AGGREGATE MATERIALS

A. Coarse Aggregate Type A1 - Roadways: Conforming to ABC Stone NCDOT standards. Coarse Aggregate Type A1 shall be used for roadways on an as needed basis.

B. Coarse Aggregate Type A2 – Drainage Aggregate: Subangular, subrounded, rounded, or well rounded particle shaped conforming to No. 57 Stone NCDOT Standards. Coarse Aggregate Type A2 shall be used in the perimeter drain, for construction of erosion and sediment control structures, and where shown on the Drawings.

C. Coarse Aggregate Type A3: Conforming to Class B Riprap NCDOT standards. Coarse aggregate Type A3 shall be used for drainage feature outlet protection, for erosion and sediment control structures, and where shown on the Drawings.

2.2 SOURCE QUALITY CONTROL

A. Aggregate Material - Testing and Analysis: Perform in accordance with ASTM C33, ASTM C136, ASTM D421, ASTM D422, ASTM D4253, ASTM D4254, AASHTO T11, and/or AASHTO T27.

B. When tests indicate materials do not meet specified requirements, change material or material source and retest.

C. Furnish materials of each type from same source throughout the Work.

PART 3 EXECUTION

3.1. STOCKPILING

A. Stockpile materials on site at locations agreed upon by Engineer and Owner.

B. Stockpile in sufficient quantities to meet Project schedule and requirements.

C. Separate differing materials with dividers or stockpile apart to prevent mixing.

D. Direct surface water away from stockpile site so as to prevent erosion or deterioration of materials.

3.2. STOCKPILE CLEANUP

A. Remove stockpile, leave area in clean and neat condition. Grade site surface to prevent free standing surface water and restore to original site conditions.

3.3. EXAMINATION

A. Verify substrate has been inspected, gradients and elevations are correct, and is dry.

3.4. PREPARATION

A. Correct irregularities in substrate gradient and elevation by scarifying, reshaping, and re-compacting.

B. Do not place fill on soft, muddy, or frozen surfaces.

3.5. AGGREGATE PLACEMENT

A. Spread aggregate over prepared substrate to a total compacted thickness as specified on Drawings.

B. Place aggregate in a maximum layer and compact to specified density.

C. Level and contour surfaces to elevations and gradients indicated.

D. Place aggregate in a maximum layer and compact to specified density.

E. Level and contour surfaces to elevations and gradients indicated.

F. Add water to assist compaction. If excess water is apparent, remove aggregate and aerate to reduce moisture content.

G. Use mechanical tamping equipment in areas inaccessible to compaction equipment.

H. Coarse aggregate Type A1, ABC stone for roadways
   1. Spread aggregate over prepared substrate to a total compacted thickness as specified on Drawings.
   2. Add small quantities of fine aggregate to coarse aggregate as appropriate to assist compaction.

3.6. TOLERANCES

A. Scheduled Compacted Thickness: Within ¼ inch.

B. Variation From Design Elevation: Within ½ inch.

3.7. FIELD QUALITY CONTROL

A. Coarse aggregate Type A1, where used for road surfacing applications, shall be compacted to a density of 98 percent of its NCDOT modified Proctor (AASHTO T180 as modified by NCDOT) maximum dry density and in accordance with these Specifications. Field density testing shall be performed at a minimum frequency of one test per 2,500 square feet per compacted lift.

B. Compaction testing will be performed in accordance with ASTM D1556, ASTM D1557, ASTM D698, AASHTO T180 (as modified by NCDOT), ASTM D2167, ASTM D2922, and/or ASTM D3017.

C. If tests indicate Work does not meet specified requirements, remove Work, replace and retest.

END OF SECTION

SECTION 02230
SITE CLEARING

PART 1 GENERAL

1.1 SUMMARY

A. Section Includes:
1. Site Clearing and Grubbing.
2. Stripping/Topsoil Excavation.

B. Description of Work:
1. Site Clearing and Grubbing: includes clearing trees and grubbing brush and root mat materials in previously undisturbed areas of the project such as the borrow area and perimeter drain outlet areas.
2. Stripping/Topsoil Excavation: includes removing the near surface soil layer no more than 6 inches in depth at the borrow area, stockpiling, and replacing topsoil in the borrow area prior to seeding.

C. Related Sections:
1. Section 02315 – Excavation.
2. Section 02374 – Erosion Control Devices.

1.2 UNIT PRICE - MEASUREMENT AND PAYMENT

A. Payments will be made to the Contractor in accordance with the specified method of measurement and the unit or lump sum prices stipulated in the accepted Bid.

B. This method of payment will constitute complete compensation for all work required by the Contract Documents.

1.3 SUBMITTALS

A. Submit results of soil nutrient and organic content testing for materials approved by the Engineer for re-use as topsoil.

1.4 QUALITY ASSURANCE

A. Perform Work in accordance with State and local standards and ordinances.

B. Conform to applicable codes for environmental requirements, disposal of debris, and burning debris on site (if allowed by OWNER).

PART 2 PRODUCTS

2.1 MATERIALS

A. NA

PART 3 EXECUTION

3.1 EXAMINATION

A. Verify existing plant life designated to remain is tagged or identified.

B. Identify topsoil stockpile area and waste area for materials not approved for re-use as topsoil. May dispose on site if permitted by Owner in Owner designated area.

3.2 PREPARATION

A. Call Local Utility Line Information service not less than three working days before performing Work.
   1. Request underground utilities to be located and marked within and surrounding construction areas.

3.3 PROTECTION

A. Locate, identify, and protect from damage utilities indicated to remain.

B. Protect trees, plant growth, and features designated to remain as final landscaping as specified on Drawings.

C. Protect bench marks, survey control points, groundwater monitoring wells, and existing structures from damage or displacement.

3.4 SITE CLEARING AND GRUBBING

A. Notify Engineer prior to commencing with clearing activities.

B. Install erosion control devices as shown on the Drawings and as specified in Section 02374 – Erosion Control Devices.

C. Clear areas required for access to site and execution of Work.

D. Remove trees and shrubs within construction area. Remove all trash or debris. Remove all materials to a depth necessary to eliminate soils containing more than 5 percent by weight fibrous organic matter, rubbish, vegetable matter, small stones, stumps, roots, root system, or other objectionable deleterious material within the clearing limits.

E. Clear undergrowth and deadwood.

F. Allow inspection of cleared areas by Engineer or his representative prior to beginning other construction activities.

3.5 REMOVAL

A. Remove debris, rock, and extracted vegetation from site. If permitted by Owner, may dispose of on-site in Owner specified location.

B. Remove construction debris and other materials that can not be used in earthwork construction or final vegetation. Materials shall be disposed off-site unless permitted by Owner to dispose of on-site in Owner designated location.

C. Do not burn or bury materials on-site unless permitted by State and local ordinances and laws and given permission by Owner to do so. Leave site in clean condition.

3.6 STRIPPING/TOPSOIL EXCAVATION

A. Excavate topsoil from areas to be further excavated, or re-graded without mixing with foreign materials for use in finish grading. The minimum topsoil stripping depth shall be six inches or as determined by the Engineer.

B. Stockpile material at the designated on-site stockpile location and protect from erosion.

C. Remove excess topsoil not intended for reuse, from site unless permitted by owner to dispose of on-site in Owner designated location.

END OF SECTION

SECTION 02315
EXCAVATION

PART 1 GENERAL

1.1 SUMMARY

A. Section Includes:
1. Excavating Unsuitable Material (Undercut).
2. Furnishing, installing, maintaining, and operating temporary measures for diversion or removal of surface water and/or groundwater.

B. Related Sections:
1. Section 02230 – Site Clearing.
2. Section 02320 – Backfill – Structural.
3. Section 02374 – Erosion Control Devices.
4. Section 02620 – Perimeter Drain.
5. Section 03480 – Pre-Cast Concrete Structures.

1.2 UNIT PRICE - MEASUREMENT AND PAYMENT

A. Excavating Unsuitable Material (Undercut):
1. Basis of Measurement: By the cubic yard.
   a. The quantity of undercutting will be based upon survey information collected before and after the undercut. A grid pattern as approved by the Engineer of ground surface elevations in the area shall be surveyed and reference points installed by the Contractor prior to excavation and prior to placement of overlying fill. The Engineer shall check the as-built finished grades and determine the excavated volume of soil based on survey data provided by the Contractor.
   b. In the case of small volume areas of undercutting, it will be acceptable to use an average depth times area volume computation, if both the Contractor and Owner agree prior to measurement. Both the Contractor and Owner or his designee should be represented when average depth measurements are made.
2. Basis of Payment: By the cubic yard of undercut times the unit price for undercut.
   a. Includes excavating to required elevations, loading and placing materials in stockpile, and removing excess/waste material from site.

1.3 SUBMITTALS

A. N/A

PART 2 PRODUCTS

2.1 NA

PART 3 EXECUTION

3.1 PREPARATION

A. Call Local Utility Line Information service not less than three working days before performing Work.

1. Have the underground utilities to be located and marked within and surrounding construction areas.

B. The Contractor shall protect all existing facilities, including, but not limited to existing electrical lines and poles, and monitoring wells during excavations and stockpiling. Damaged facilities shall be promptly replaced at the Contractor's expense.

C. Notify utility company to remove and relocate any utilities.

D. Perform site clearing, grubbing, rotary mowing, necessary surveys, and topsoil excavation per Section 02230 – Site Clearing. Any depths of removal of six inches or less shall be considered Site Clearing and Grubbing.

E. Identify required lines, levels, contours, and datum locations.

F. Protect bench marks, survey control points, and existing structures from excavating equipment and vehicular traffic.

3.2 SOIL DENSIFICATION

A. NA

3.3 EXCAVATION

A. Install erosion control measures as specified on the Drawings.

B. Excavate subsoil to accommodate site structures and construction operations.

C. Landfill subgrade shall be excavated to the lines and grades shown on the Drawings.

D. Slope banks with machine to angle of repose or less unless shored as per OSHA standards.

E. Remove lumped subsoil, boulders, and rock.

F. Notify Engineer of unexpected subsurface conditions and discontinue affected Work in area until notified to resume Work.

G. Materials determined unsuitable by the Engineer shall be excavated from a depth of 6 inches below the existing ground surface within the area, the area 10 feet beyond the area and any other area designated by the Engineer. (Depths of removal of 6 inches or less in areas designated above shall be considered stripping.) The lateral extent and required depth of undercutting will be determined by the Engineer.

H. Excavated unsuitable areas shall be replaced with structural fill, lean concrete, or aggregate as recommended by the Engineer.

I. If necessary, the area of excavation/undercutting shall be dewatered to a depth of at least two feet below the bottom of the excavation and shall be maintained in the dewatered condition until compacted earth fill is placed to at least three feet above the original water level or to original ground level, whichever is higher.

J. Perform temporary dewatering as necessary during excavation to minimize softening of exposed subgrade soils. A temporary sump may be constructed for accumulation of impounded waters

resulting from rain or seepage. A pump with adequate capacity shall be provided and operated to maintain a low water level in the sump.

K. Correct over-excavated areas with select backfill and compact replacement as specified for authorized excavation per Section 02320 – Backfill - Structural. No payment will be made for over-excavation or corrections made to over-excavated areas.

L. Structural fill types as defined in Sections 02320 and as designated by the Engineer shall be stockpiled in a designated area free of contaminating soil, clearing debris, or other objectionable materials in an area acceptable to Owner and Engineer. Stockpiles that will remain inactive for a period greater than 21 days shall be stabilized with temporary seed. All reconditioning of structural fill to obtain the required compaction will be the responsibility of the Contractor.
   1. Engineer will assist the Contractor in the determination of structural fill and non-select material.
   2. Excavated material that does not meet the criteria for structural fill types as outlined in Sections 02320 shall be termed non-select material and disposed of off-site or stockpiled on the property at the Owner's and/or Engineer's discretion.

M. Furnish all labor, materials, supervision, and equipment required for constructing and maintaining temporary diversion measures as required for construction of the landfill and all structures. Furnish, install, maintain, and operate all pumping equipment for diversion or removal of water and maintaining the work area free from water throughout construction including temporary ditches and sump construction.

N. Protect and or divert stormwater flows from the work area utilizing Stormwater and Erosion Control Structures referenced in Section 02374.

O. Provide survey information before and after excavation.

3.4 FIELD QUALITY CONTROL

A. Request visual inspection of bearing surfaces by Engineer before installing subsequent work.

B. Excavation is complete when the Engineer approves the Final Subgrade Survey.

3.5 PROTECTION

A. Prevent displacement or loose soil from falling into excavation; maintain soil stability.

B. Protect bottom of excavations and soil adjacent to and beneath structures from freezing.

C. Protect structures, utilities and other facilities from damage caused by settlement, lateral movement, undermining, stormwater, groundwater and other hazards created by earth operations.

D. Grade top perimeter of excavation to prevent surface water from draining into excavation.

E. Protect outlet of excavations from potential sediment deposit by placing sediment control measures such as silt fence and/or temporary sediment traps.

END OF SECTION

SECTION 02320
BACKFILL - STRUCTURAL

PART 1 GENERAL

1.1 SUMMARY

A. Section Includes:
1. Fill Type S1 - structural fill: to achieve cover system final grades and for surface water control systems.
2. Fill Type S2 - subgrade fill: defined as compacted fill placed to achieve proposed cover system subgrade elevations. Fill Type S2 may include fill material containing ash.
3. Fill Type S3 - topsoil/vegetative soil: defined as soil material capable of sustaining vegetation as specified in these Specifications.

B. Description of Work:
1. Fill Type S1 and S2: Where fill is obtained from reuse or native sources, includes borrow excavation, hauling, scraping, stockpiling, dust control, scarifying substrate surface, moisture conditioning, placing where required, compacting, maintenance, temporary erosion control measures as needed including temporary stockpile stabilization if necessary, and removing accumulated water during construction.
2. Fill Type S3 - topsoil/vegetative soil: Includes borrow excavation and/or furnishing, hauling, scraping, scarifying fill material, placing, maintenance, and temporary erosion control measures as needed including temporary stockpile stabilization if necessary.

C. Related Sections:
1. Section 02315 - Excavation.
2. Section 02324 - Trenching.
3. Section 02374 – Erosion Control Devices.
4. Section 02500 – High Density Polyethylene (HDPE) Piping and Miscellaneous Items.
5. Section 02620 – Perimeter Drain.
6. Section 02924 – Seeding and Soil Supplements.
7. Section 03480 – Pre-Cast Concrete Structures.

1.2 UNIT PRICE - MEASUREMENT AND PAYMENT

A. Payments will be made to the Contractor in accordance with the specified method of measurement and the unit or lump sum prices stipulated in the accepted Bid.

B. This method of payment will constitute complete compensation for all work required by the Contract Documents.

1.3 REFERENCES

A. American Society for Testing and Materials:
1. ASTM D422 - Standard test Method for Particle-Size Analysis of Soils (Grain Size with Hydrometer).
2. ASTM D698 - Standard Test Methods for Laboratory Compaction Characteristics of Soil Using Standard Effort (12,400 ft-lbf/ft3).
3. ASTM D1556 – Standard Test Method for Density of Soil In Place by the Sand-Cone Method.

4. ASTM D2216 - Standard Test Method for Laboratory Determination of Water (Moisture) Content of Soil and Rock by Mass.
5. ASTM D2922 - Standard Test Method for Density of Soil and Soil-Aggregate in Place by Nuclear Methods (Shallow Depth).
6. ASTM D2487 – Standard Practices for Classification of Soil for Engineering Purposes (Unified Soil Classification System)
7. ASTM D2937 - Standard Test Method for Density of Soil in place by the Drive-Cylinder Method.
8. ASTM D4318 - Standard Test Methods for Liquid Limit, Plastic Limit, and Plasticity Index of Soils.

1.4 SUBMITTALS

A. N/A

PART 2 PRODUCTS

2.1 FILL MATERIALS

A. Fill Type S1, Structural Fill:
1. Structural fill is defined as compacted fill for cover system construction to achieve cover system final grades and for surface water control systems.
2. Natural soil material from designated on-site borrow areas and/or stockpiles. Structural fill shall be classified as SP, SM, SW, SC, SW-SM, SW-SC, SP-SM, ML, MH, or CL soils according to the Unified Soil Classification System (ASTM D2487).
3. Free of topsoil, organic material, roots, stumps, brush, rocks larger than 4 inches, subsoil, debris, vegetation, and other foreign matter.
4. Structural fill located within 1-foot of geosynthetics components shall have a maximum particle size of 3 inches. The material shall be screened by the Earthwork Contractor, if necessary, to remove particle sizes greater than 3 inches in diameter. No more than 15 percent of the material should be retained on the No. 4 sieve.
5. All material clods will be broken down with tillers and/or discs to provide a homogeneous soil that is free of clods greater than 4 inches in diameter with no more than 15 percent retained on the No. 4 sieve.

B. Fill Type S2, Subgrade Fill:
1. Subgrade fill is defined as compacted fill placed to achieve cover system subgrade elevations.
2. May consist of fly ash and bottom ash from within the landfill area or other on-site sources as directed by the Engineer.
3. May consist of natural soil material from designated on-site borrow areas and/or stockpiles.
4. Shall be classified as SP, SM, SW, SC, SW-SM, SW-SC, SP-SM, ML, MH, or CL soils according to the Unified Soil Classification System (ASTM D2487).
5. Free of topsoil, organic material, roots, stumps, brush, rocks larger than 4 inches, subsoil, debris, vegetation, and other foreign matter.
6. All material clods will be broken down with tillers and/or discs to provide a homogeneous soil that is free of clay clods greater than 4 inches in diameter with no more than 15 percent retained on the No. 4 sieve.

C. Fill Type S3, Topsoil/Vegetative Soil:
1. Topsoil/vegetative soil is defined as fill placed to support vegetation establishment.
2. Excavated and reused materials from designated on-site or off-site borrow areas and/or stockpiles.

3. Shall be classified as SM, SC, SW-SM, SW-SC, SP-SM, ML, MH, or CL soils according to the Unified Soil Classification System (ASTM D2487).
4. Free of roots, stumps, brush, rocks larger than 2 inches, debris, and other foreign matter.
5. Topsoil material shall have nutrient content and pH capable of supporting vegetation.
6. Shall have a minimum organic contact of 2% by weight.
7. All material clods will be broken down with tillers and/or discs to provide a homogeneous soil that is free of clods greater than 2 inches in diameter with no more than 15 percent retained on the No. 4 sieve.

PART 3 EXECUTION

3.1 EXAMINATION

A. The Engineer will assist the Earthwork Contractor in the determination of Structural Fill and non-select material during excavation operations (see Section 02315). The Earthwork Contractor will be responsible for excavating, transporting, stockpiling, placing and compacting all materials as needed.

3.2 PREPARATION

A. Subgrade shall be firm and capable of supporting fill placement. At the discretion of the Engineer or his representative, the subgrade may be proof rolled or probed to identify soft spots; fill and compact to density equal to or greater than requirements for subsequent fill material.

B. Cut out soft areas of subgrade not capable of compaction in place. Backfill with Type S1 or S2 fill (as specified by the Engineer) and compact to density equal to or greater than requirements for subsequent fill material.

C. Scarify subgrade surface to depth of 6 inches.

D. Begin backfilling after Engineer's acceptance of the appropriate survey for underlying surface.

3.3 BACKFILLING

A. Backfill areas to contours and elevations as shown on Drawings.

B. Systematically backfill to allow maximum time for natural settlement. Do not backfill over porous, wet, frozen, or spongy subgrade surfaces.

C. Fill Type S1 and S2: Place and compact material in loose lifts not exceeding 8 inches in thickness and not exceeding 6 inches compacted thickness. The first lift over geosynthetics shall be not less than 12 inches in loose thickness. Refer to Specification Section 02324 – Trenching for backfill requirements for drop inlets and culverts.

D. Fill Type S3: Scarify subgrade, place material in one lift and track in with backhoe or other equipment approved by Engineer.

E. Employ placement method that does not disturb or damage other work.

F. Backfill against supported structures. Do not backfill against unsupported structures. Backfill simultaneously on each side of unsupported structures until supports are in place.

G. Protect backfill from desiccation, crusting, or cracking.

H. Make gradual grade changes. Blend slope into level areas.

I. Remove surplus backfill materials from site unless authorized by Owner to dispose of on-site in an Owner designated location.

J. Leave fill material stockpile areas free of excess fill materials.

3.4 TOLERANCES

A. Top surface Type S1 and S3 fill to achieve cover system final grades shall be plus or minus 1 inch from required elevations.

B. Top surface of Type S2 to achieve proposed cover system subgrade elevations shall be -1 to plus 0 inches from required elevations.

3.5 FIELD QUALITY CONTROL

A. Laboratory Testing
1. Perform laboratory material tests in accordance with ASTM D422, ASTM D698, ASTM D2216, and ASTM D4318.
2. Test at a frequency of:
a. 10,000 cubic yards of type S1 and S2 placed;
b. When materials using for structural fill change; and/or
c. When directed by the Engineer.

B. In Place Compaction and Natural Moisture Content Tests
1. Perform in place compaction tests in accordance with ASTM D1556, ASTM D2922, or ASTM D2937.
2. Perform in place natural moisture content test in accordance with ASTM D2216.
3. Frequency of compaction/natural moisture content tests:
a. Area fills outside the landfill, landfill subgrade, surface water control systems, or other systems not intended to function as a migration barrier, in-place density and moisture: Each lift at a minimum frequency of 1 per acre per lift, or as otherwise indicated in these Specifications.
b. Perimeter berms and roadways: Each lift at a minimum frequency of 1 per 5000 sq. ft.
c. Drop inlets and culverts: see Section 02324.
4. Compaction criteria:
a. Type S1 and S2 fill shall be compacted to minimum 95 percent of its Standard Proctor (ASTM D 698) maximum dry density.
b. Type S1 and fill placed for roadways shall be compacted to a minimum of 95 percent of its Standard Proctor (ASTM D 698) maximum dry density and 100 percent of its Standard Proctor maximum dry density within 12 inches of final subgrade.
c. Fill Type S3 should be placed in one continuous loose lift and tracked in by backhoe or other equipment approved by Engineer.
d. Compacted moisture content shall be within 3 percent of optimum moisture content for all fill placed, or as otherwise approved by Engineer.
e. Drop inlets and culverts: see Section 02324.

C. When tests indicate Work does not meet specified requirements, remove Work, replace and retest.

3.6 PROTECTION OF FINISHED WORK

A. Reshape and re-compact fills subjected to vehicular traffic.

END OF SECTION

SECTION 02324
TRENCHING

PART 1 GENERAL

1.1 SUMMARY

A. Section Includes:
1. Trenching for buried pipe.

B. Description of Work
1. Includes excavating to required elevations, protecting excavation, dewatering as needed, stockpiling excavated materials, hauling and placing excavated materials in the on-site stockpile and backfilling with Fill Type S1.

C. Related Sections:
1. Section 02320 - Backfill - Structural.
2. Section 02500 - High Density Polyethylene (HDPE) Piping and Miscellaneous Items.
3. Section 02620 – Perimeter Drain.

1.2 UNIT PRICE - MEASUREMENT AND PAYMENT

A. Payments will be made to the Contractor in accordance with the specified method of measurement and the unit or lump sum prices stipulated in the accepted Bid.

B. This method of payment will constitute complete compensation for all work required by the Contract Documents.

1.3 REFERENCES

A. American Association of State Highway and Transportation Officials:
1. AASHTO T180 - Standard Specification for Moisture-Density Relations of Soils Using a 4.54-kg (10-lb) Rammer and a 457-mm (18-in.) Drop.

B. ASTM International:
1. ASTM D698 - Standard Test Method for Laboratory Compaction Characteristics of Soil Using Standard Effort (12,400 ft-lbf/ft^3) (Standard Proctor Test).
2. ASTM D1556 – Standard Test Method for Density and Unit Weight of Soil in place by the Sand-Cone Method.
3. ASTM D1557 - Standard Test Method for Laboratory Compaction Characteristics of Soil Using Modified Effort (6,000 ft-lbf/ft^3) (Modified Proctor Test).
4. ASTM D2216 - Standard Test Method for Moisture Content.
5. ASTM D2922 – Standard Test Method for Density of Soil and Soil Aggregate in Place by Nuclear Methods (Shallow Depth).
6. ASTM D2937 – Standard Test Method for Density of Soil in place by the Drive-Cylinder Method Test.
7. ASTM D3017 – Standard Test Method for Water Content of Soil and Rock in Place by Nuclear Methods (Shallow Depth).

1.4 DEFINITIONS

A. Utility: Any buried pipe, duct, conduit, or cable.

1.5 SUBMITTALS

A. As site conditions may dictate, the Contractor shall prepare an excavation protection plan describing sheeting, shoring, and bracing materials and installation required to protect excavations and adjacent structures and property; include structural calculations to support plan.

1.6 QUALITY ASSURANCE

A. Perform Work in accordance with North Carolina Department of Transportation (NCDOT) standards.

B. Perform Work in accordance with applicable Federal, State, and local excavation safety standards.

1.7 QUALIFICATIONS

A. As site conditions may dictate, the Contractor shall prepare excavation protection plan under direct supervision of Professional Engineer experienced in design of this Work and licensed in State of project.

1.8 FIELD MEASUREMENTS

A. Verify field measurements prior to placement of materials within trench.

1.9 COORDINATION

A. Verify Work associated with lower elevation utilities is complete before placing higher elevation utilities.

PART 2 PRODUCTS

2.1 FILL MATERIALS

A. Structural Fill for pipe backfill: Type S1 as specified in Section 02320.

PART 3 EXECUTION

3.1 LINES AND GRADES

A. Grades:
1. Lay pipes to lines and grades indicated on Drawings.
2. Maintain grade alignment of pipe using string line parallel with grade line and vertically above centerline of pipe.
   a. Establish string line on level batter boards at intervals of not more than 25 feet.
   b. Install batter boards spanning trench, rigidly anchored to posts driven into ground on both sides of trench.
   c. Set three adjacent batter boards before laying pipe to verify grades and line.
   d. Determine elevation and position of string line from elevation and position of offset points or stakes located along pipe route.
   e. Do not locate pipe using side lines for line or grade.
3. As an alternative method, use laser-beam instrument with qualified operator to establish lines and grades.

B. Location of Pipe Lines:
   1. Location and approximate depths of proposed pipe lines are shown on Drawings.
   2. Engineer or Owner reserves right to make changes in lines, grades, and depths of pipe lines and structures when changes are required for Project conditions.

3.2 PREPARATION

B. Call Local Utility Line Information service and the Owner not less than three working days before performing Work.
   1. Underground utilities must be located and marked within and surrounding construction areas.

B. Identify required lines, levels, contours, and datum locations.

C. Protect bench marks and existing structures from excavating equipment and vehicular traffic.

D. Maintain and protect above and below grade utilities indicated to remain.

3.3 TRENCHING

A. Implement temporary dewatering measures to reduce softening of exposed subgrade soils as excavation advances, until foundation construction is complete, and until fill placement is a minimum of 3-feet above the groundwater level.

B. Do not advance open trench more than 100 feet ahead of installed pipe.

C. Cut trenches sufficiently wide to enable installation and allow inspection. Remove water or materials that interfere with Work.

D. Excavate bottom of trenches maximum 16 inches wider than outside diameter of pipe or structure.

E. Excavate trenches to depth indicated on Drawings. Provide uniform and continuous bearing and support for pipe.

F. Do not disturb subgrade soils within a 45 degree zone of influence with depth of foundations, if applicable.

G. When Project conditions permit, slope side walls of excavation starting 2 feet above top of pipe. When side walls can not be sloped, provide sheeting and shoring to protect excavation as specified in this Section.

H. When required, perform excavations and provide temporary bracing, shoring, and/or benching in accordance with applicable Federal, State, and local excavation safety standards.

I. When subsurface materials at bottom of trench are loose or soft, excavate to greater depth as directed by Engineer until suitable material is encountered. Backfill according to Part 3.5 of this Section.

J. Cut out soft areas of subgrade not capable of compaction in place. Backfill with Fill Type S1 and compact to density equal to or greater than requirements for subsequent backfill material.

K. Hand trim excavation. Remove loose matter.

L. Correct over excavated areas with compacted backfill as specified for authorized excavation or replace with lean concrete as directed by Engineer. Corrections for over excavation shall be conducted at no cost to the Owner.

M. Stockpile excavated material in area designated on site and remove excess material not being used from site unless authorized by Owner to dispose of on-site in an Owner designated location.

3.4 SHEETING AND SHORING

A. Comply with all OSHA, Federal, State, and local trench safety and excavation requirements.

B. Sheet, shore, and brace excavations to prevent danger to persons, structures and adjacent properties and to prevent caving, erosion, and loss of surrounding subsoil.

C. Support trenches more than 4 feet deep excavated through unstable, loose, or soft material. Provide sheeting, shoring, bracing, or other protection to maintain stability of excavation.

D. Design sheeting and shoring to be removed at completion of excavation work.

E. Repair damage caused by failure of the sheeting, shoring, or bracing and for settlement of filled excavations or adjacent soil at no cost to the Owner.

F. Repair damage to pipe bedding work from settlement, water or earth pressure or other causes resulting from inadequate sheeting, shoring, or bracing.

3.5 BACKFILLING

A. Trenches with Piping:
   1. Cover pipe with GM, GC,SM, SC, ML, CL material (USCS soil type) in loose 6 inch or thinner lifts with unfrozen fill materials, compacted uniformly to a minimum of 90 percent of its Standard Proctor maximum dry density (AASHTO T180, ASTM D698, ASTM D1557).
   2. Employ placement method that does not disturb or damage utilities in trench.

B. Systematically backfill to allow maximum time for natural settlement. Do not backfill over porous, wet, frozen, or spongy subgrade surfaces.

C. Maintain optimum moisture content of fill materials to attain required compaction density.

D. Do not leave more than 50 feet of trench open at end of working day. The contractor shall be responsible for protecting section of trench left open and exposed ash from run-on, run-off, erosion, etc. Protect open trench to prevent danger to the public.

E. Remove surplus fill materials from site unless authorized by Owner to dispose of on-site in an Owner designated location.

F. Protect open trench to prevent danger to Owner.

3.6 TOLERANCES

A. Top Surface of General Backfilling: Plus or minus 1/2 inch from required elevations.

3.7 FIELD QUALITY CONTROL

A. Perform laboratory material tests in accordance with AASHTO T180, ASTM D698, and/or ASTM D1557.

B. Perform in place compaction tests in accordance with the following:
   1. Density Tests: ASTM D1556, ASTM D2922, ASTM D2937.
   2. Moisture Tests: ASTM D2216, ASTM D3017.

C. When tests indicate Work does not meet specified requirements, remove Work, replace, compact, and retest.

D. Frequency of Tests: One test per compacted lift per 200 linear feet of trench for piping and for anchor trench backfill.

3.8 PROTECTION OF INSTALLED CONSTRUCTION

A. Reshape and re-compact fills subjected to vehicular traffic during construction.

B. General construction traffic shall be limited to areas designated by the Engineer that have been protected by at least 24 inches of compacted fill material.

END OF SECTION

SECTION 02374
EROSION CONTROL DEVICES

PART 1 GENERAL

1.1 SUMMARY

A. Section Includes:
1. Silt Fencing.
2. Silt Fence Outlets.
3. Grass-Lined/Matted Diversion Channels.
4. Wattles.
5. Riprap Energy Dissipater (Outlet Protection Apron).
6. Grassing.

B. Description of Work:
1. Silt Fencing: Includes labor and materials for furnishing, installing, and maintaining the silt fencing during construction as may be required to obtain the specified results. Includes removal of silt fence upon establishment of vegetation in accordance with Section 02924.
2. Silt Fence Outlets: Includes labor and materials for furnishing, installing, and maintaining the silt fence outlets, including stockpiling and replacing aggregate as necessary, during construction as may be required to obtain the specified results. Includes removal of silt fence outlets upon establishment of vegetation in accordance with Section 02924.
3. Grass-Lined/Matted Diversion Channels: Includes labor and materials for excavating, windrowing, compacting, installing erosion control matting, maintaining during construction, seeding, and mulching for grass-lined channels as indicated on Drawings. Refer to Section 02924 for seeding and soil supplements for grassing.
4. Includes furnishing, installing, and maintaining the wattles as may be required to obtain the specified results.
5. Riprap Apron: Includes labor and materials for cleaning, excavating, backfilling, placing embankment, providing and installing non-woven geotextile, providing and installing riprap, and maintaining during construction.
6. Grassing: Refer to Section 02924.

C. Related Sections:
1. Section 02060 - Aggregate.
2. Section 02230 - Site Clearing.
3. Section 02315 – Excavation.
4. Section 02320 – Backfill – Structural.
5. Section 02620 – Perimeter Drain.
6. Section 02674 – Nonwoven Geotextile.
7. Section 02924 - Seeding and Soil Supplements.

1.2 UNIT PRICE - MEASUREMENT AND PAYMENT

A. Payments will be made to the Contractor in accordance with the specified method of measurement and the unit or lump sum prices stipulated in the accepted Bid.

B. This method of payment will constitute complete compensation for all work required by the Contract Documents.

1.3 REFERENCES

A. ASTM International:
1. ASTM D698 - Standard Test Method for Laboratory Compaction Characteristics of Soil Using Standard Effort (12,400 ft-lbf/ft3 (600 kN-m/m3)).

1.4 SUBMITTALS

A. Manufacturer's Certificate: Certify Products meet or exceed specified requirements.

1.5 QUALITY ASSURANCE

A. Perform Work in accordance with requirements of these Specifications.

B. Perform Work in accordance with NCDOT standards.

1.6 PRE-INSTALLATION MEETINGS

A. Convene minimum one week prior to commencing work of this Section.

1.7 ENVIRONMENTAL REQUIREMENTS

A. Do not place grout when air temperature is below freezing.

B. Do not place concrete when base surface temperature is less than 40 degrees F or surface is wet or frozen.

PART 2 PRODUCTS

2.1 RIPRAP AND GEOTEXTILE MATERIALS

A. Riprap: As shown on Drawings and as specified in Section 02060. Furnish in accordance with NCDOT standards.

B. Geotextile Fabric: Non-biodegradable, non-woven geotextile, 8 oz/sy, UV stabilized filter fabric as specified in Section 02674.

2.2 MATTING

A. Matting: As shown on Drawings.

2.3 AGGREGATE AND SOIL MATERIALS

A. Fine and Coarse Aggregate: As shown on Drawings and as specified in Section 02060.

B. Soil Backfill: Soil Type S1 as specified in Section 02320. Subsoil with no rocks over 4 inches in diameter, frozen earth or foreign matter.

2.4 SILT FENCING

A. As specified on Drawings.

2.5 PLANTING MATERIALS

A. Seeding and Soil Supplements: As specified in Section 02924.

B. Mulch: As specified in Section 02924.

PART 3 EXECUTION

3.1 EXAMINATION

A. Verify compacted subgrade or granular base is acceptable and ready to support devices and imposed loads.

B. Verify gradients and elevations of base or foundation for other work are correct.

3.2 SILT FENCING

A. Install as specified on Drawings.

3.3 SILT FENCE OUTLETS

A. Locations as indicated on the Drawings and may be field-adjusted with Engineer's approval.

3.4 GRASS-LINED/MATTED DIVERSION CHANNELS

A. Compact to 95 percent of the maximum dry density as determined by ASTM D698.

B. On entire channel area, apply soil supplements and sow seed as specified in Section 02924.

C. Mulch seeded areas with straw as specified in Section 02924.

D. Install erosion control matting as specified on Drawings.

3.5 WATTLES

A. Install as specified on Drawings.

3.6 RIPRAP ENERGY DISSIPATOR (OUTLET PROTECTION APRON)

A. Excavate to indicated depth of rock lining or nominal placement thickness as indicated on Drawings. Remove loose, unsuitable material below bottom of rock lining, then replace with suitable material. Thoroughly compact and finish entire foundation area to firm, even surface.

B. Lay and overlay geotextile fabric over substrate. Lay fabric parallel to flow from upstream to downstream. Overlap edges upstream over downstream and upslope over downslope. Provide a minimum overlap of 2 feet. Offset adjacent roll ends a minimum of 5 feet when lapped. Cover fabric as soon as possible and in no case leave fabric exposed more than 4 weeks.

C. Carefully place rock on geotextile fabric to produce an even distribution of pieces, with minimum of voids and without tearing geotextile. Place as indicated on Drawings.

D. Unless indicated otherwise, place full course thickness in one operation to prevent segregation and to avoid displacement of underlying material. Arrange individual rocks for uniform distribution. Place evenly and carefully to minimize voids.

1. Saturate rock with water and let all standing water drain. Fill voids between pieces with grout, were shown on Drawings, for at least top 6 inches. Sweep surface with stiff broom to remove excess grout.

3.7 SITE STABILIZATION

A. Incorporate erosion control devices indicated on Drawings into the Project at the earliest practicable time.

B. Construct, stabilize and activate erosion controls before site disturbance within tributary areas of those controls.

C. Stockpile and waste pile heights shall not exceed heights indicated on the drawings. Slope stockpile sides at 2(H): 1(V) or flatter or as otherwise indicated on the Drawings.

D. Temporary or permanent ground cover must be provided on exposed graded slopes and fills within 21 calendar days of the completion of a phase of grading. Permanent ground cover must be provided within 15 working days or 90 calendar days (60 days in HQW zones), whichever term is shorter, upon the completion of construction or development.

1. During non-germinating periods, apply mulch at recommended rates.
2. Stabilize disturbed areas which are not at finished grade and which will be disturbed within one year in accordance with Section 02924 and as specified on Drawings for temporary seeding.
3. Stabilize disturbed areas which are either at finished grade or will not be disturbed within one year in accordance with Section 02924 permanent seeding specifications.

E. Stabilize diversion channels and stockpiles immediately.

3.8 FIELD QUALITY CONTROL

A. Inspect erosion control devices on a weekly basis and after each runoff event in accordance with applicable North Carolina regulations. Make necessary repairs to ensure erosion and sediment controls are in good working order.

B. Compaction Testing: As specified in Section 02320.

C. When tests indicate work does not meet specified requirements, remove work, replace and retest.

3.9 CLEANING

A. Remove and dispose of sediment when sediment accumulation in sedimentation structures has reached a point one-half depth of sediment structure or device, or as indicated on the Drawings.

B. Do not damage structure or device during cleaning operations. Any damage caused by cleaning operations shall be repaired at no cost to the Owner.

C. Do not permit sediment to erode into construction or site areas or natural waterways.

D. Clean channels when depth of sediment reaches approximately one half channel depth.

E. Do not damage channel or channel lining material during cleaning operations.

SECTION 02500
HIGH DENSITY POLYETHYLENE (HDPE) PIPING AND MISCELLANEOUS ITEMS

PART 1 GENERAL

1.1 SUMMARY

A. Section Includes:
1. Single-wall HDPE pipe, perforated and solid, for perimeter drain system.
2. Double-wall HDPE pipe culverts for stormwater system.
3. Single-wall SDR 26 HDPE pipe for Down Drain Alternate.

B. Description of Work:
1. Perimeter drain system: includes excavation/trenching, hand trimming excavation, backfill, pipe, fittings including joints, elbows, tees, end caps, and all other associated fittings.
2. Stormwater system: includes excavation/trenching, hand trimming excavation, backfill, pipe, fittings including joints, end caps, and all other associated fittings.
3. Down Drain Alternate: includes excavation/trenching, hand trimming excavation, removing and disposal of corrugated pipe, removal and disposal of geocomposite drainage layer at the top-deck slope crest, solid-wall HDPE SDR 26 pipe installation, fittings including joints (by butt-fusion welding) and all other associated fittings, connecting pipes to existing concrete vaults and grouting with non-shrink grout or as otherwise specified by the manufacturer, and pipe backfill.

C. Related Sections:
1. Section 02060 - Aggregate.
2. Section 02320 - Backfill - Structural.
3. Section 02324 - Trenching.
4. Section 02620 – Perimeter Drain.

1.2 UNIT PRICE - MEASUREMENT AND PAYMENT

A. Payments will be made to the Contractor in accordance with the specified method of measurement and the unit or lump sum prices stipulated in the accepted Bid.

B. This method of payment will constitute complete compensation for all work required by the Contract Documents.

1.3 REFERENCES

A. American Society for Testing and Materials:
1. ASTM D638 - Standard Test Method for Tensile Properties of Plastics.
2. ASTM D695 - Standard Test Method for Compressive Properties of Rigid Plastics.
3. ASTM D696 - Standard Test Method for Coefficient of Thermal Expansion of Plastics Between (-30°) C and 30°C With a Vitreous Silica Dilatometer.
4. ASTM D746 - Standard Test Method for Brittleness Temperature of Plastics and Elastomers by Impact.
5. ASTM D790 - Standard Test Method for Flexural Properties of Unreinforced and Reinforced Plastics and Electrical Insulating Materials.
6. ASTM D1238 - Standard Test Method for Flow Rates of Thermoplastics by Extrusion Plastometer.
7. ASTM D1248 - Standard Specification for Polyethylene Plastics Extrusion Materials for Wire and Cable.

8. ASTM D1505 - Standard Test Method for Density of Plastics by the Density Gradient Technique.
9. ASTM D1603 - Standard Test Method for Carbon Black in Olefin Plastics.
10. ASTM D1693 - Standard Test Method for Environmental Stress Cracking of Ethylene Plastics.
11. ASTM D2240 - Standard Test Method for Rubber Property - Durometer Hardness.
12. ASTM D2513 - Standard Specification for Thermoplastic Gas Pressure Pipe, Tubing, and Fittings.
13. ASTM D2657 - Standard Practice for Heat Fusion Joining of Polyolefin Pipe and Fittings.
14. ASTM D 2837 - Standard Test Method for Obtaining Hydrostatic Design Basis for Thermoplastic Pipe materials.
15. ASTM D3261 - Standard Specification for Butt Fusion Polyethylene (PE) Plastic Fittings for Polyethylene (PE) Plastic Pipe and Tubing.
16. ASTM D3350 - Standard Specification for Polyethylene Plastics Pipe and Fittings Materials.
17. ASTM F405 Standard Specification for Corrugated Polyethylene (PE) Pipe and Fittings.
18. ASTM F667 Standard Specification for Large Diameter Corrugated Polyethylene Pipe and Fittings.
19. ASTM F714 - Standard Specification for Polyethylene (PE) Plastic Pipe (SDR-PR) Based on Outside Diameter.
20. ASTM F1473 - Standard Test Method for Notch Tensile Test to Measure the Resistance to Slow Crack Growth of Polyethylene Pipes and Resins.

B. Plastics Pipe Institute (PPI):
1. PPI TR4 - Recommended Hydrostatic Strengths and Design Stresses for Thermoplastic Pipe and Fittings Compound.

1.4 SUBMITTALS

A. Product Data: Submit data on pipe, fittings, and accessories.

B. Manufacturer's Installation Instructions: Submit special procedures required to install Products specified including connections to concrete structures. For double wall pipe submit any related post-construction inspection / testing procedures recommended by the manufacturer.

1.5 CLOSEOUT SUBMITTALS

A. Project Record Documents: Record location of pipe runs, connections, and invert elevations via survey information.

B. Camera inspection reports and video copy of camera inspection of piping systems for stormwater pipe repair or replacement work.

1.6 FIELD MEASUREMENTS

A. Verify field measurements and elevations are as indicated on the Drawings.

1.7 DELIVERY, STORAGE, AND HANDLING

A. Packaging, handling, and shipment shall be in accordance with the manufacturer’s standards, instructions, and recommendations.

B. Transportation to Site:

1. The manufacturer shall package the pipe, fittings, structures, and/or other miscellaneous HDPE items in a manner designed to deliver it or them to the project neatly, intact, and without physical damage.
2. The transportation carrier shall use appropriate methods and intermittent checks to insure the materials are properly supported, stacked, and restrained during transport such that it is not nicked, gouged, or physically damaged.

C. Storage:
1. Pipe, structures, and other miscellaneous HDPE items shall be stored on clean, level ground to prevent undue scratching or gouging and as needed to protect them from being covered with excessive dirt, water, moisture, and mechanical abrasion.
2. The handling of pipe, structures, and other miscellaneous HDPE items shall be done in such a manner that there is no damage. Nylon slings are often used.
3. If the pipe must be stacked for storage, such stacking shall be done in accordance with the pipe manufacturer's recommendations.
4. Store gaskets for mechanical and push-on joints in cool, dry location out of direct sunlight and not in contact with petroleum products.

D. Care shall be taken to minimize the amount of soil collected inside the pipe, structures, and other miscellaneous HDPE items while handling and installing.

E. The pipe, structures, and other miscellaneous HDPE items shall be handled in such a manner that it is not pulled over sharp objects or cut by chokers or lifting equipment, and care shall be exercised during installation not to damage the pipes and fittings.

F. Any pipe section, structure, fitting, joint or other miscellaneous HDPE items that becomes broken, cracked, crushed, cut, scratched, gouged or otherwise rendered unsuitable, as determined by the Engineer, shall be removed and replaced by the Contractor. Scratches greater than 6 inches in length and gouges exhibiting a depth in excess of 8 percent of the wall thickness of the pipe shall be cause for rejection of pipe or fittings to the extent designated by the Engineer.

G. Fused Pipe Segment Handling:
1. Fused segments of pipe shall be handled so as to avoid damage to the pipe.
2. Chains or cable type chokers must be avoided when lifting fused sections of pipe. Nylon slings are preferred.
3. Spreader bars are recommended when lifting long fused sections.
4. Pipe shall be fused in lengths not to exceed that which can be moved and placed easily and safely, causing no damage to the fused pipe or welds.

1.8 COORDINATION

A. Coordinate the Work with connection to piping, leachate collection and detection systems, stormwater collection systems, and trenching.

PART 2 PRODUCTS

2.1 PERIMETER DRAIN PIPE

A. Perimeter Drain Pipe shall be ADS single wall HDPE pipe or Engineer approved equivalent.

B. Refer to Drawings for pipe diameter and installation locations.

C. Pipe shall contain slotted perforations no wider than 0.12 inches and not longer than 1.18 inches. The perforation pattern shall be a 3-slot pattern (slots 120 degrees apart in section), and staggered

60 degrees from perforated section to perforated section. The pipe perforations shall be spaced such that no less than 1 square inch slots is present per foot of perforated pipe.

D. Refer to ASTM F405, ASTM F667 and Part 3 of this Section for installation instructions.

E. Bedding And Cover Materials
1. Bedding: Fill Type as specified in Sections 02060 and 02324.
2. Cover: Fill Type, as specified in Sections 02320 and 02324.
3. Soil Backfill from Above Pipe to Finish Grade: Soil Type, as specified in Section 02320.

2.2 STORMWATER SYSTEM (DOWN DRAIN) PIPE

A. Stormwater system (down drain) pipe shall be ADS N-12 double wall HDPE pipe or Engineer approved equivalent.

B. Refer to Drawings for pipe diameter and installation locations.

C. Refer to ASTM F405, ASTM F667 and Part 3 of this Section for installation instructions.

D. Pipe joints shall be water tight Type N-12 WT IB, N-12 HP or equivalent.

E. Bedding And Cover Materials
1. Bedding: Fill Type as specified in Sections 02060 and 02324.
2. Cover: Fill Type, as specified in Sections 02320 and 02324.
3. Soil Backfill from Above Pipe to Finish Grade: Soil Type, as specified in Section 02320.

2.3 DOWN DRAIN PIPE ALTERNATE

A. Down drain alternate pipe shall be SDR 26 single wall HDPE pipe or Engineer approved equivalent.

B. Refer to Drawings for pipe diameter and installation locations. Solid wall pipe shall be same nominal diameter as corrugated pipe it is replacing.

C. Base Resin (HDPE Material)
1. HDPE material used for the manufacture of HDPE pipe and fittings under this specification shall be produced from approved pipe material base resin that is high density, high molecular weight polyethylene (HDPE) pipe grade resin with the nominal physical properties:
   a. Equivalent to Type III, Category 5, Class C, Grade PE 3408 in accordance with ASTM D1248.
   b. Equivalent to cell classification PE345464C in accordance with ASTM D3350.
   c. As outlined in Table 02500-A below.
2. The material shall be listed by PPI (Plastics Pipe Institute, a division of the Society of the Plastics Industry) in PPI TR-4 with a 73ºF hydrostatic design basis of 1,600 psi and a 140ºF hydrostatic design basis of 800 psi. The PPI listing shall be in the name of the pipe manufacturer and shall be based on ASTM D 2837 testing.
3. The resin shall contain not less than 97% of the base polymer and not less than 2% carbon black as defined in ASTM D1248, Class C to impart maximum weather resistance.
4. The pipe material shall contain no more than 3% carbon black, anti-oxidants, and heat stabilizers combined, and no other additives, fillers or extenders.
5. The pipe shall contain no recycled compound except that generated in the manufacturer's own plant from resin of the same raw material, including both the base resin and the co-extruded resin.

D. Physical Appearance

1. All pipes shall have good appearance qualities.
2. The pipe shall be homogeneous throughout and the surfaces shall be smooth and uniform with no visible defects.
3. The pipes shall be free of visible cracks, holes, voids, nicks, cuts, gouges, scratches, blisters, gels, undispersed ingredients, any signs of contamination by foreign inclusions, or other defects that may affect the wall integrity or the pipe's serviceability.
4. Holes for perforated HDPE pipes shall be cleanly cut, identical in geometry, and evenly spaced.

E. Physical Properties

1. Pipe and fitting dimensions, workmanship, standard dimension ratio (SDR) and corresponding pressure rating shall be in accordance with the requirements of ASTM F714.
2. HDPE piping shall have a Standard Dimension Ratio (SDR) of 26 unless otherwise specified on the Drawings.
3. Pipe supplied under this Specification shall have a nominal OD indicated on the Drawings unless otherwise specified.
4. The chemical and corrosion resistance of the PE pipe and all fittings shall be in keeping with typical properties of high quality polyethylene products currently available through commercial sources and equal to or greater than that of the 60 mil HDPE geomembrane specified.
5. All mechanical fasteners or fittings shall be stainless steel.
6. At a minimum, the pipe material shall meet the properties presented in Table 02500-A below:

TABLE 02500-A
REQUIRED PIPE AND BASE RESIN PHYSICAL PROPERTIES

Property	Test Method	Unit	Nominal Value
Material Designation	PPI-TR4		PE 3408
Cell Classification	ASTM D3350		345464C
Material Classification	ASTM D1248		Type III, Category 5, Class C
Density	ASTM D1505		≥0.945 g/cm^3
Melt Index	ASTM D1238 (Condition E)	g/10min	<0.1
Carbon Black Content/Color; UV Stabilzer	ASTM D1603	% range	2 to 3
Flexural Modulus	ASTM D790 2% Secant	psi	>125,000
Tensile Strength @ Ultimate	ASTM D638	psi	3,200
Tensile Strength @Yield	ASTM D638 (Type IV, 2 ipm) [1]	psi	>3,000
Elongation @ Yield	ASTM D638 (Type IV, 2 ipm) [1]	%	>8
Ultimate Elongation @ Break	ASTM D638	%	>750
Modulus of Elasticity	ASTM D638 (Type IV, 2 ipm) [1]	psi	>100,000
Environmental Stress Crack Resistance (ESCR)	ASTM D1693 F_o, Condition C	hrs	>5,000
Hardness	ASTM D2240	Shore "D"	>60
Compressive Strength at Yield	ASTM D695	psi	>1,600
Slow Crack Resistance (SCG) (PENT test)	ASTM F1473	hours	>100
Hydrostatic Design Basis @ 73.4°F (23°C) 140°F (60°C)	ASTM D2837	psi	>1,600 >800
Low Temperature Brittleness	ASTM D746	°F(°C)	< - 180 (-117)
Linear Thermal Expansion Coefficient	ASTM D696	in/in/°F	9 x 10^{-5}

Notes:
1. Dumb-bell tested at a rate of strain of 2 inches/minute (ipm)

F. Pipe Fittings
1. All fittings specified on the Drawings, or otherwise, needed to make pipe connections (ex: 90º elbow) shall be in accordance with ASTM D2513 and ASTM D3261 and shall be manufactured by injection molding, a combination of extrusion and machining, or fabrication from HDPE pipe conforming to this specification.
2. The fittings shall be fully pressure rated and provide a working pressure equal to that of the pipe with an included 2:1 safety factor.
3. The fittings shall be manufactured from the same base resin type and cell classification as the pipe itself as specified in Parts 2.1A, 2.1B, and 2.1C of this Section 02500. The fittings shall be homogeneous throughout and free from cracks, holes, foreign inclusions, voids, or other injurious defects.
4. Molded socket fittings shall not be used.

5. Pre-fabricated fittings:
   a. Shall not be permitted unless molded fittings are not available from the pipe Manufacturer, and only after obtaining specific approval from the Engineer.
   b. Shall be made using pipe segments meeting all base resin, physical, and property requirements presented in Parts 2.1A, 2.1B, and 2.1C of this Section 02500.
   c. All pipe segments in a pre-fabricated fitting shall be pressure rated to exceed by 20% the highest pipe pressure rating to which they are intended to be connected.

G. HDPE Joints
1. The method of joining for high density polyethylene pipe shall be the heat butt fusion method of high density polyethylene pipe per ASTM D2657 and shall be performed in strict accordance with the pipe manufacturer's recommendations, subject to the Engineer's approval. The heat fusion equipment used in the joining procedures should be capable of meeting all conditions recommended by the pipe manufacturer.
2. All joints shall be made by trained technicians qualified by the Manufacturer and using equipment and controlled procedures approved by the Manufacturer.
3. All pipe joints shall be stronger than the pipe itself under both tension and hydrostatic loading conditions.
4. The joints shall be leak-tight, homogeneous and uniform throughout.
5. Properly executed electrofusion fittings may be used. Extrusion welding or hot gas welding of HDPE shall not be used for pressure pipe applications or fabrications where shear or structural strength is important, as determined by the Engineer. Mechanical joint adapters, flanges, unions, grooved-couplers, transition fittings, and some mechanical couplings may be used to mechanically connect HDPE pipe with approval by the Engineer. Refer to the manufacturer's recommendations.

H. Perforated Pipes
1. The HDPE pipe sections shall be perforated as shown on the Drawings.
2. Perforations shall be cleanly cut, identical in geometry, and evenly spaced.

I. Accessories
1. Valves, vaults, and other accessories as shown on Drawings.

J. Cover Materials
1. Cover: Fill Type S1, backfill as specified in Section 02324.

K. Identification
1. The following shall be continuously indent printed on the pipe, or spaced at intervals not exceeding 5 feet:
   a. Name and/or trademark of the pipe manufacturer.
   b. Pipe series designation.
   c. Nominal pipe size.
   d. Standard dimension ratio (SDR).
   e. The letters PE followed by the polyethylene grade per ASTM D1248, followed by the Hydrostatic Design basis in 100's of psi (e.g., PE 3408).
   f. Manufacturing Standard Reference (e.g., ASTM F714-1).
   g. A production code from which the date and place of manufacture can be determined.

PART 3 EXECUTION

3.1 EXAMINATION

A. Verify trench cut or excavation is ready to receive work and excavations, dimensions, and elevations are as indicated on the Drawings.

3.2 PREPARATION

A. Correct over excavation with fill material at no additional cost to the Owner.

B. Remove large stones or other hard matter capable of damaging pipe or impeding consistent backfilling or compaction.

C. Pipe trenching should be conducted in accordance with Section 02324.

D. Cavities shall be excavated according to Section 02315.

3.3 INSTALLATION

A. Pipe and Outlet Structures
1. Excavate pipe trench (where excavation is required for installation) in accordance with Section 02324.
2. Install pipe, fittings, and accessories in accordance with the Drawings, these Specifications, and the Manufacturer's recommendations.
3. Route piping in straight line.
4. Pipe sections shall be joined adjacent to the placement area prior to placement.
5. Pipe shall be connected in lengths not to exceed that which can be moved and placed easily and safely, causing no damage to the connected pipe sections.
6. Pipe will be laid such that the perforations/slots (if applicable) are on the underside of the pipe.
7. Care shall be taken not to drop the pipe while moving it, and to avoid excess stress or strain during installation. When pulling the pipe, either a pulling head or a suitable wraparound sleeve with rubber protective cover shall be used to prevent the pulling cables from damaging the pipe.
8. Seal pipe connections to concrete vaults with non-shrink grout or as otherwise specified by the manufacturer.
9. Pipeline installation and placement of backfill around pipelines shall be performed when the pipe is in a contracted state, i.e., during the cool of the morning, at night, or during periods of over-cast skies.
10. Immediately after placement, the pipe shall be thoroughly and completely embedded, supported, and covered, and the backfill compacted.
11. Refer to Section 02324 for backfilling and compacting requirements. Do not displace or damage pipe when compacting.
12. Pipe shall be joined in accordance with manufactures recommendations with soil tight or water tight connections as indicated on the Drawings.

B. Miscellaneous HDPE Items
1. Install in accordance with the Drawings and the Manufacturer's recommendations.

3.4 FIELD QUALITY CONTROL

A. The Engineer or his representative will observe and monitor for compliance of the materials and work with this Specification.

B. Quality control by the Contractor will include any post-construction testing, monitoring, and/or inspecting per Manufacturer's recommendations as required to be submitted per Section 1.4 B of this specification.

C. Quality control by the Engineer will include testing, monitoring, and/or inspecting:
1. The HDPE pipe and fittings for correct size, workmanship, and fabrication.
2. Damage during installation.

3. The installation, alignment and connection of all pipe, and fittings.
4. Backfilling of pipe.

D. Contractor shall request inspection prior to and immediately after placing pipe.

E. Perform camera inspection and provide reports and video copy of camera inspection on stormwater system piping elements.

F. Backfill and Compaction Testing: In accordance with Section 02324.

G. When tests indicate Work does not meet specified requirements, remove work, replace and retest.

H. HDPE pipes and other miscellaneous items shall be subject to rejection on account of failure to conform to these Specifications. In addition, individual sections of these items may be rejected because of any of following reasons:
1. Any pipe section, fitting, joint, or outlet structure that becomes broken, cracked, crushed, cut, scratched, gouged or otherwise rendered unsuitable, as determined by the Engineer, shall be removed and replaced by the Contractor.
2. Scratches greater than 6 inches in length and gouges exhibiting a depth in excess of 8 percent of the wall thickness of the pipe, fitting, or outlet structure shall be cause for rejection of a pipe section, fitting, or outlet structure to the extent designated by the Engineer.

3.5 PROTECTION OF FINISHED WORK

A. Protect pipe, cover, and outlet structures from damage or displacement until backfilling operation is in progress.

B. Care shall be exercised during construction not to damage the pipelines, fittings, and outlet structures.
1. Construction equipment shall not be allowed to pass over any pipeline until a minimum of 24 inches of compacted cover is placed above the crown of the pipe.

END OF SECTION

SECTION 02620

PERIMETER DRAIN

PART 1 GENERAL

1.1 Summary

A. Section Includes: Installing perimeter drain around the cover system perimeter as indicated on the Drawings.

B. Description of Work:

1. Cover System Perimeter – Type 1: Includes establishing proposed perimeter drain line and grade, removing and stockpiling existing vegetative cover soils for re-use, removing and stockpiling existing compacted soil cover for reuse, removal and disposal of key trench geosynthetics, dewatering as needed, maintaining trench stability, installing the perimeter drain as indicated on the Drawings, replacing compacted soil cover and vegetative soil cover to restore design grades, hauling and placing soil as needed from the borrow area, providing for erosion and sediment control as needed, controlling stormwater during work, and establishing vegetation.
2. Cover System Perimeter – Type 2: Includes establishing proposed perimeter drain line and grade, removing and stockpiling existing vegetative cover soils for re-use, removing and stockpiling existing compacted soil cover for reuse, removal and disposal of key trench geosynthetics and existing panel drain materials, removal and disposal of geosynthetics in the subgrade restoration areas, dewatering as needed, maintaining trench stability, providing and placing subgrade fill to restore design subgrade, installing new LLDPE geomembrane and geocomposite, installing the perimeter drain as indicated on the Drawings, replacing compacted soil cover and vegetative soil cover to restore design grades, providing for erosion and sediment control as needed, controlling stormwater during work, and establishing vegetation.
3. Cover System Perimeter – Type 2 (Alternate): The difference in the Alternate work item is that the existing geosynthetics shall be preserved during removal of cover soils, preserved during subgrade restoration, and reused. This work includes establishing proposed perimeter drain line and grade, removing and stockpiling existing vegetative cover soils for re-use, removing and stockpiling existing compacted soil cover for reuse, removal and disposal of key trench geosynthetics and existing panel drain materials, preserving and reusing geosynthetics in the subgrade restoration areas, dewatering as needed, maintaining trench stability, providing and placing subgrade fill to restore design subgrade, installing the perimeter drain as indicated on the Drawings, replacing compacted soil cover and vegetative soil cover to restore design grades, providing for erosion and sediment control as needed, controlling stormwater during work, and establishing vegetation.

C. Related Sections:

1. Section 02060 - Aggregate.
2. Section 02315 – Excavation.
3. Section 02320 – Backfill – Structural.
4. Section 02674 – Nonwoven Geotextile.
5. Section 02374 – Erosion Control Devices
6. Section 02500 – High Density Polyethylene (HDPE) Piping and Miscellaneous Items.
7. Section 02672 – Linear Low Density Polyethylene (LLDPE) Geomembrane.
8. Section 02674 – Nonwoven Geotextiles.

9. Section 02675 – Geocomposite Drainage Layer.
10. Section 02924 – Seeding and Soil Supplements.

1.2 UNIT PRICE - MEASUREMENT AND PAYMENT

A. Payments will be made to the Contractor in accordance with the specified method of measurement and the unit or lump sum prices stipulated in the accepted Bid.

B. This method of payment will constitute complete compensation for all work required by the Contract Documents.

1.3 REFERENCES

A. N/A.

1.4 SUBMITTALS

A. Product Data: Submit data on aggregates, backfill, erosion control devices, HDPE piping products/accessories, LLDPE geomembrane, nonwoven geotextile, geocomposite drainage layer, and seeding/soil supplements consistent with requirements of the related Specification sections.

B. Contractor shall prepare and submit a Perimeter Drain Work Plan to the Owner and Engineer with the bid and the plan shall be updated as needed before beginning work. The purpose of the Work Plan is to demonstrate to the Owner and Engineer the contractor's proposed work flow and organization. The Work Plan shall describe the proposed sequence of work; identify proposed equipment and labor resources; describe run-on stormwater management; describe run-off stormwater management; and provide contingency plans for stabilizing perimeter in the event of extended periods of rainfall.

1.5 CLOSEOUT SUBMITTALS

A. Project Record Documents consistent with Specification Section 01000.

PART 2 PRODUCTS

A. Materials composing perimeter drains shall be consistent with requirements of each related Specification section.

PART 3 EXECUTION

3.1 EXAMINATION

A. Verify existing conditions before starting work.

B. Review existing vegetation condition two-weeks prior to starting work. If excessive vegetation is present the Owner may make provisions for mowing vegetation in the work area.

3.2 INSTALLATION

A. Install erosion and sediment control measures as needed.

B. Remove existing vegetative cover soils and compacted soil cover for reuse. Stockpile materials at the location indicated on the Drawings or otherwise approved by the Owner. Reuse excavated materials to restore final grades after perimeter drain construction is complete.

C. Perimeter drain excavation and backfill shall be conducted in accordance with requirements of Section 02324, Trenching.

D. Existing Geosynthetics:
   1. Cover System Perimeter – Type 1: Preserve and protect the existing LLDPE geomembrane and geocomposite drainage layer up to the lines and limits indicated on the Drawings. Reserve enough existing geocomposite drainage layer material to extend into the perimeter drain as indicated on the Drawings.
   2. Cover System Perimeter – Type 2: Remove and dispose of the existing LLDPE geomembrane and geocomposite drainage layer, restore subgrade elevations, place new LLDPE geomembrane and geocomposite drainage layer. Provide enough geocomposite drainage layer to extend into the perimeter drain as indicated on the Drawings.
   3. Cover System Perimeter – Type 2 (Alternate): Preserve and protect the existing LLDPE geomembrane and geocomposite drainage layer for reuse, restore subgrade elevations, redeploy existing LLDPE geomembrane and geocomposite. Provide enough geocomposite drainage layer to extend into the proposed perimeter drain as indicated on the Drawings.

E. Cover System Perimeter Type 2: Restore subgrade conditions by placing fill type S2 per requirements of Section 02320 prior to placing overlying LLDPE geomembrane and geocomposite drainage layer.

F. Perimeter Drain Installation: upon trench excavation the perimeter drain shall be installed in the general accordance with the following sequence:
   1. Place nonwoven geotextile filter fabric over the bottom and sides of the prepared trench excavation as shown on the Drawings.
   2. Place drain pipe to the lines, grades, and dimensions indicated on the Drawings.
   3. Place drainage pipe with perforations facing down. Mechanically join pipe ends consistent with Manufacturers recommendations as approved by the Engineer.
   4. Bed drainage pipe in aggregate as shown on the Drawings. Place aggregate in approximate nine (9) inch thick lifts and consolidate using mechanical tamping equipment. Do not displace or damage pipe when compacting.
   5. Cover the aggregate with nonwoven geotextile fabric upon completion of aggregate placement as shown on the Drawings.

G. Install LLDPE geomembrane per Section 02672. Install geocomposite drainage layer per Section 02675.

H. Place protective soil cover and vegetative cover soil to restore design grades. Refer to Section 02320 for compaction requirements.

3.3 FIELD QUALITY CONTROL

A. The Contractor must provide the Engineer (or his representative) an opportunity to observe and document perimeter drain installation at the following milestones before the contractor proceeds:

1. After removing the existing protective soil cover and exposing the existing key trench location to observe geosynthetics condition before trimming/cutting and removing geosynthetics in the existing key trench;
2. Perimeter drain trench subgrade condition prior to nonwoven geotextile placement;
3. Pipe placement prior to backfill with drainage aggregate; and
4. Nonwoven geotextile overlap prior to structural backfill.

3.4 PROTECTION OF INSTALLED CONSTRUCTION

A. Protect trench, pipe, aggregate, and perimeter drain installation from surface water run-on during construction.

B. Stabilize and protect the finished construction throughout the seeding maintenance warranty period.

END OF SECTION

SECTION 02672
LINEAR LOW DENSITY POLYETHYLENE (LLDPE) GEOMEMBRANE

PART 1 GENERAL

1.1 SUMMARY

A. Section Includes:
1. Linear Low Density Polyethylene (LLDPE) Geomembrane.

B. Description of Work: The work provides for the replacement and repair of LLDPE geomembrane for cover system retrofit including geomembrane, placement, seaming, testing, repairs, and all incidentals necessary to complete the Work as specified on the Drawings, Specifications, and CQA Plan.

C. Related Sections:
1. Section 02324 - Trenching.
2. Section 02620 – Perimeter Drain.
3. Section 02674 – Nonwoven Geotextiles.
4. Section 02675 – Geocomposite Drainage Layer.

1.2 UNIT PRICE - MEASUREMENT AND PAYMENT

A. Payments will be made to the Contractor in accordance with the specified method of measurement and the unit or lump sum prices stipulated in the accepted Bid.

B. This method of payment will constitute complete compensation for all work required by the Contract Documents.

1.3 REFERENCES

A. Construction Quality Assurance (CQA) Plan, Pine Hall Road Ash Landfill Closure, Prepared by S&ME Inc., October 2007.

B. American Society for Testing and Materials (ASTM) standards:
1. ASTM D792 Standard Test Methods for Density and Specific Gravity (Relative Density) of Plastics by Displacement.
2. ASTM D1004 Standard Test Method of Initial Tear Resistance of Plastic Film and Sheeting.
3. ASTM D1505 Standard Test Method for Density of Plastics by the Density-Gradient Technique.
4. ASTM D1603 Standard Test Method for Carbon Black in Olefin Plastics.
5. ASTM D1693 Standard Test Method for Environmental Stress Cracking of Ethylene Plastics.
6. ASTM D3895 Test Method for Oxidative Induction Time of Polyolefins by Differential Scanning Calorimetry.
7. ASTM D4833 Test Method for Index Puncture Resistance of Geotextiles, Geomembranes, and Related Products.
8. ASTM D5199 Standard Test Method for Measuring Nominal Thickness of Geosynthetics.
9. ASTM D5321 Standard Test Method for Determining the Coefficient of Soil and Geosynthetic or Geosynthetic and Geosynthetic Friction by the Direct Shear Method.
10. ASTM D5596 Test Method for Microscopic Evaluation of the Dispersion of Carbon Black in Polyolefin Geosynthetics.
11. ASTM D5641 Standard Practice for Geomembrane Seam Evaluation by Vacuum Chamber.
12. ASTM D5721 Standard Practice for Air-Oven Aging of Polyolefin Geomembranes.

13. ASTM D5885 Standard Test Method for Oxidative Induction Time of Polyolefin Geosynthetics by High Pressure Differential Scanning Calorimetry.
14. ASTM D5994 Standard Test Method for Measuring the Core Thickness of Textured Geomembranes.
15. ASTM D6392 Standard Test Method for Determining the Integrity of Nonreinforced Geomembrane Seams Produced Using Thermo-Fusion Methods.
16. ASTM D6693 Standard Test Method for Determining Tensile Properties of Nonreinforced Polyethylene and Nonreinforced Polyethylene and Nonreinforced Flexible Polypropylene Geomembranes.

C. Geosynthetic Research Institute (GRI) Standards
1. GM12 Measurement of the Asperity Height of Textured Geomembrane Using a Depth Gage.

D. U.S. Environmental Protection Agency (EPA), *Technical Guidance Document:*
1. "*The Fabrication of Polyethylene FML Field Seams*" EPA/530/SW-89/069, (1193).

1.4 SUBMITTALS

A. Manufacturer's Product Information
1. At least five (5) working days prior to shipment, the Geosynthetic Installer shall furnish the Engineer with pre-shipping product data sheets and test data for each geomembrane.
2. The Geosynthetic Installer or supplier (manufacturer) will be required to submit his Quality Control program and the results of factory testing to the Engineer prior to initiating field work.
3. At a minimum, the Manufacturer will perform the tests at the frequencies given in Table 2672-A found in this Section on the LLDPE sheet prior to shipping LLDPE material to the site. These tests shall conform to the standards set in Table 2672-B, also found in this Section.
4. The information supplied shall be in the form of a factory quality control certificate for each geomembrane roll and shall include the following:
   a. Roll and lot numbers and identification.
   b. Length and width of each roll.
   c. Date each roll was manufactured.
   d. Sampling procedures.
   e. Results of quality control tests that are to include those presented in Table 2672-A found in this Section and description of test methods used. The results of these tests must meet the minimum required physical properties for LLDPE membrane specified in Table 2672-B found in this Section 02672.

B. A written certificate from the Geosynthetic Manufacturer stating that the resin and geomembrane materials supplied are in compliance with this Section 02672.

C. Manufacturer's Installation Instructions: Submit special procedures for geomembrane installation.

D. The Geosynthetic Installer shall adopt and use the quality assurance forms prepared by the Engineer, or other forms approved by the Engineer, during all applicable phases of geomembrane installation, inspection and testing. The Geosynthetic Installer can request to use his forms. The forms must be submitted to the Engineer at least two weeks prior to geomembrane installation for review and approval.

E. A resume of the proposed Superintendent of the Geosynthetic Installer must be submitted to the Engineer for final approval two weeks prior to geomembrane installation.

1.5 CLOSEOUT SUBMITTALS

A. Forms by the CQAO:
1. CQAO Daily Report
2. Field Inventory Control, Storage Inspection, and Cross-Reference Roll Numbers
3. Subgrade Certification
4. Geomembrane Trial Seam Log
5. Geomembrane Deployment Report
6. Geomembrane Seam Log
7. Geomembrane Defect Log
8. Geomembrane Repair Testing Log
9. Geomembrane Laboratory Destructive Test Results

B. The Geosynthetic Installer's installation supervisor shall observe and check all phases of the geomembrane installation. When the geomembrane is finally accepted by the Owner, the Geosynthetic Installer shall submit written certification to the Owner that the installation conforms to the requirements of the Manufacturer.

1.6 QUALITY ASSURANCE

A. Perform Work in accordance with these Specifications and the CQA Plan.

B. The Manufacturer shall sample and test the LLDPE geomembrane material, at minimum frequencies specified in Table 2672-A of this Section 02672.

C. Any geomembrane sample that does not comply with this Section 02672 shall result in rejection of the roll from which the sample was obtained. The Contractor shall replace any rejected rolls at no additional cost to Owner.

D. If a geomembrane sample fails to meet the quality control requirements of this Section 02672, the Contractor shall require that the Geomembrane Manufacturer sample and test each roll manufactured in the same lot or batch, or at the same time, as the failing roll. Sampling and testing of rolls shall continue until a patter of acceptable test results is established.

E. General manufacturing procedures shall be performed in accordance with the Manufacturer's internal quality control guide and/or documents.

F. The Engineer shall examine the rolls upon delivery to the site and report any deviations from these Specifications to the Contractor.

G. The need for conformance testing shall be determined by the Engineer for rolls delivered to the site.
1. For this purpose, the Engineer shall take a sample three feet (along roll length) by roll width according to ASTM Practice D4354. The sample shall be properly marked, wrapped and sent to an independent laboratory for conformance testing.
2. The pass or fail of the conformance test results shall be determined according to ASTM Practice D4759.

1.7 QUALIFICATIONS

A. Geosynthetic Installer Equipment and Personnel
1. Quality Control Foreman (QCF)
a. The Geosynthetic Installer shall provide an individual whose title is "Quality Control Foreman" (QCF) who shall be experienced in all phases of quality control testing and procedure.

b. The QCF will be dedicated to performing or directing the Geosynthetic Installer's quality control activities, (i.e. air pressure, vacuum box and spark non-destructive testing and field destructive testing).
c. The QCF and the Superintendent may be the same person if approved by the Engineer.

2. Crew/Equipment
   a. During the installation of the geomembrane, the Geosynthetic Installer shall provide a minimum crew size of 9, for which at least 6 must be qualified installers (a Superintendent and/or QCF and a minimum of 4 skilled technicians).
   b. Geosynthetic Installer shall supply and maintain at least three extrusion welders and three double hot wedge fusion welders, at least one of which must be available at the working space at all times.
   c. At least one extra generator shall be supplied and maintained by the Geosynthetic Installer to be used as a spare.

1.8 DAILY PRE-INSTALLATION MEETINGS

A. At the beginning of each work day the Earthwork Contractor's Superintendent, the Geosynthetic Installer's Superintendent, and the CQAO will meet to discuss the upcoming work plan for all parties to ensure cooperation, communication and understanding.

1.9 DELIVERY, STORAGE AND HANDLING

A. Geomembrane shall be shipped:
   1. Rolled and labeled with roll number and manufacturer's batch number.
   2. Manufacturer’s quality control documentation shall be included with each roll.

B. Transport and handle geomembrane with equipment designed to protect geomembrane from damage.

C. On-site storage shall be as needed to protect the geomembrane rolls from excessive accumulations of soil on the geomembrane surfaces, water, heat, mechanical abrasion, puncture and vehicular traffic.

D. The geomembrane rolls shall not be stacked more than three rolls high, or as otherwise recommended by the Manufacturer.

PART 2 PRODUCTS

2.1 Linear Low Density Polyethylene (LLDPE)

A. Materials:
   1. Textured geomembrane shall be made of unreinforced linear low density polyethylene (LLDPE) that has a nominal thickness as noted on the Drawings designed and manufactured specifically for the purpose of liquid containment.
   2. The geomembrane used shall meet, at a minimum, the standards specified in Table 2672-B found this Section.
   3. The chemical resistance of the geomembrane shall be in keeping with typical properties of high quality polyethylene products currently available through commercial sources.
   4. Up to 5 percent (by weight) clean, uncontaminated regrind material (that is, material that has been previously processed by the same manufacturer, but has never seen previous service) shall be allowed in the Geomembrane sheet if approved by the Engineer.
   5. The Engineer’s approval shall not be unreasonably withheld if the manufacturer can demonstrate compliance with this Specification.

6. Regrind material made of the same resin as the geomembrane from sheet failing the physical properties of the geomembrane or resin as specified herein shall not be allowed under any circumstances.
7. Edge trim and sheet failed for thickness or cosmetic reasons may be considered for regrind.
8. LLDPE geomembrane shall be supplied in rolled sheets having a minimum width of 22 feet and a minimum length of 400 feet. Variances for shorter roll lengths may be allowed at the discretion of the Engineer.

B. Interface Friction Angle Requirements and Testing

1. The minimum interface friction angle shall be 28° between the Textured LLDPE Geomembrane and overlying and underlying materials.
2. These properties shall be verified by the CQA Officer by performing interface friction testing on the materials to be used for construction of the cover system. Consequently, the Contractor shall be required to submit samples of the proposed LLDPE Geomembrane for testing within one week of award of contract.
3. The interface frictional resistance shall be determined by direct shear tests in general accordance with ASTM D5321 at normal stresses ranging from 120, 240, and 480 psf.
4. The interfaces shall be tested saturated with water.

TABLE 2672-A
REQUIRED PRE-SHIPPING SHEET TESTING OF GEOMEMBRANE – TEXTURED

Property	*Test Method*	*Frequency*
Thickness	ASTM D5994	Each Roll
Asperity Height mils	GM 12	Every 2nd roll *(1)*
Density	ASTM D1505/ ASTM D792	Every 200,000 lb.
Tensile Properties *(2)* • ***Break Strength*** • ***Break Elongation***	ASTM D6693, Type IV	Every 20,000 lb.
2% Modulus	ASTM D5323	Per each formulation
Tear Resistance	ASTM D1004	Every 45,000 lb.
Puncture Resistance	ASTM D4833	Every 45,000 lb.
Axi-Symmetric Break Resistance Strain – (min.)	ASTM D5617	Per each formulation
Carbon Black Content	ASTM D1603	Every 45,000 lb
Carbon Black Dispersion	ASTM D5596	Every 45,000 lb.
Oxidative Induction Time (OIT) *(3)*		Every 200,000 lb.
(a) Standard OIT (min. ave.)	ASTM D3895	
Or		
(b) High Pressure OIT (min. ave.)	ASTM D5885	
Oven Aging at 85ºC *(4)*	ASTM D5721	Per each formulation
(a) Standard OIT(min. ave.) - % retained after 90 days	ASTM D3895	
Or		
(b) High Pressure OIT (min. ave.) - % retained after 90 days	ASTM D5885	

(1) Alternate the measurement side for double sided textured sheet.
(2) Machine direction (MD) and cross machine direction (XMD) average values should be on the basis of 5 test specimens each direction. Break elongation is calculated using a gage length of 2.0 inches.
(3) The manufacturer has the option to select either one of the OIT methods listed to evaluate the antioxidant content in the geomembrane.
(4) It is also recommended to evaluate samples at 30 and 60 days to compare with the 90 day response.

TABLE 2672-B
REQUIRED PHYSICAL PROPERTIES OF LLDPE GEOMEMBRANE - TEXTURED

Property	***Test Method***	***Required Value***
Geomembrane Size (Nominal)		40 mil
Thickness (min. ave.) • lowest individual for 8 out of 10 values • lowest individual for any of the 10 values	ASTM D-5994	38 mil 36 mil 34 mil
Asperity Height mils (min. ave.) *(1)*	GM 12	10 mil
Density (min.)	ASTM D1505/ ASTM D792	0.939 g/cc
Tensile Properties (min. ave.)	ASTM D6693, Type IV	
- Break Stress		60 lb./in.
- Break Elongation		250%
2% Modulus – (max.)	ASTM D5323	2400 lb./in.
Tear Resistance (min. ave.)	ASTM D1004	22 lb.
Puncture Resistance (min. ave.)	ASTM D4833	44 lb.
Axi-Symmetric Break Resistance Strain	ASTM D5617	30%
Carbon Black Content (range)	ASTM D1603	2.0 – 3.0 %
Carbon Black Dispersion	ASTM D5596	9 in Categories 1 or 2 and 1 in Category 3
Oxidative Induction Time (OIT)		
(a) Standard OIT (min. ave.) or	ASTM D3895	100 minutes
(b) High Pressure OIT (min. ave.)	ASTM D5885	400 minutes
Oven Aging at 85ºC	ASTM D5721	
(a) Standard OIT(min. ave.) - % retained after 90 days Or	ASTM D3895	35%
(b) High Pressure OIT (min. ave.) – % retained after 90 days	ASTM D5885	60%
Seam Strengths *(2)*		
1. Shear Strength: Hot Wedge Seam Extrusion Fillet Seam	ASTM D6392	60 lb/in (min.) 60 lb/in (min.)
2. Peel Strength: Hot Wedge Seam Extrusion Fillet Seam	ASTM D6392	50 lb/in (min.) 44 lb/in (min.)
3. Peel Separation: Hot Wedge Seam Extrusion Fillet Seam	ASTM D6392	25% 25%
Non-Destructive Testing		
1. Extrusion Fillet Seam (Single Weld)	Continuous Vacuum Box	Maintain vacuum of at least 5-psi for at least 15 seconds
2. Hot Wedge Seam (Double Weld)	Air Testing	Maintain 30-psi for at least 5 minutes, with a drop in pressure not greater than 3-psi for the last 3 minutes

1. Of 10 readings; 8 out of 10 must be $\geq$ 7 mils, and lowest individual reading must be $\geq$ 5 mils.
2. Value listed for shear and peel strengths are for 4 out of 5 test specimens; the 5th specimen can be as low as 80% of the listed values.

PART 3 EXECUTION

The Geosynthetic Installer shall furnish all labor, materials, supervision and equipment to complete the Geomembrane for the project including, but not limited to, geomembrane layout, seaming, patching, and all necessary and incidental items required to complete the Work, in accordance with the Drawings and these Specifications.

3.1 EXAMINATION

A. Verify anchor trench excavation, where geomembrane is to be secured, is in correct location and configuration.

B. Verify anchor trench excavation is free from angular rocks, rubble, roots, vegetation, debris, voids, protrusions, and ground water; and other conditions affecting performance of geomembrane.

C. All geomembrane sheets shall have good appearance qualities.
   1. Texturing on the surface of the textured sheets shall be uniform and homogenously distributed.
   2. Shall be free of pinholes, holes, blisters, gels, undispersed ingredients, any signs of contamination by foreign matter, or any defect that may affect serviceability.
   3. Edges of sheets shall be straight and free from nicks and cuts.

D. Do not use materials damaged during storage or handling. If the geomembrane is not packaged and a roll is damaged during shipment, it shall be rejected. If only the outermost surface of the roll is affected, it shall be peeled back, cut, and wasted (i.e., it shall be treated as if it were the protective packaging for the remainder of the roll.

E. Rolled out geomembrane stock that requires more than one repair patch per 5,000 square feet prior to installation shall be considered faulty and shall be rejected and replaced

3.2 PREPARATION

A. The geomembrane is to cover the landfill cover in accordance with the Drawings.

B. An anchor trench (as illustrated on the Drawings and specified in Section 02324) will be required to secure the geomembrane.
   1. No loose soil will be allowed to underlie the geomembrane in the anchor trenches.
   2. The time schedule for excavation and backfilling of the anchor trenches is to be approved by the Engineer so that desiccation of trench soils does not occur prior to backfilling (see Section 02324).

C. Prepare ballast loading that shall be used for anchoring down the geomembrane during installation.
   1. Ballast loading may consist of sand bags or Portland cement bags.
   2. Bags used for containing sand or cement shall be resistant to degradation by ultraviolet rays and by the weather in general.

3.3 INSTALLATION

Installation of the geomembrane shall be in compliance with this Specification and with the Manufacturer's standard guidelines and specifications for geomembrane installation, subject to approval by the Engineer, including, but not limited to: (i) handling and site storage requirements; (ii) unrolling and laying of geomembrane sheets; (iii) field seaming or welding techniques; (iv) anchor trench and ballast details; (v) vent details; and (vi) connections to inlet structures and pipes.

A. Geomembrane Handling and Placement

1. Appropriate handling equipment shall be used when loading or moving rolled geomembrane sheets from one place to another. Appropriate equipment includes spreader and roll bars for deployment, and cloth chokers with a spreader bar for off-loading.
2. The geomembrane shall be installed at the locations and to the lines, grades and dimensions shown on the Drawings, or as otherwise directed by the Engineer.
3. Geomembrane deployment shall not be performed when precipitation is occurring, when excessive moisture or wet conditions exist, or when high winds or other adverse climatologic conditions exist.
4. The geomembrane sheets shall be unrolled and deployed in a manner which minimizes wrinkles and prevents the occurrence of folds and creases.
5. Unroll only those sections that are to be seamed together in one day.
6. Adjoining geomembrane panels shall be overlapped as recommended by the manufacturer, but not less than 4 inches, by adequately lapping the edges of the sheets. The overlap shall not exceed 6 inches for double-wedge fusion welds.
7. For stormwater drainage purposes, the upstream panel should be overlapped on top of the downstream panel to form a shingle effect.
8. Unroll several panels and allow the geomembrane to "relax" before beginning field seaming. The purpose of this is to make the edges that are to be bonded as smooth and free of wrinkles as possible.
9. After panels are initially in place, remove wrinkles as directed by the Engineer.
10. Once panels are in place and smooth, commence field seaming operations.
11. In corners and odd shaped geometric locations, the number of field seams should be minimized.

B. Field Seaming

1. Field seaming shall be in accordance with U.S. E.P.A. Technical Guidance document: "The Fabrication of Polyethylene FML Field Seams" EPA/530/SW-89/069 and/or according to this Section 02672.
2. Field seaming shall be conducted in the dry, on a compacted smooth surface. Surfaces to receive geomembrane installation should be relatively smooth and even, and free of voids, protrusions, and deleterious material.
3. All geomembrane sheets must be continuously and tightly bonded using continuous extrusion fillet welds or double wedge fusion welds and automated welding equipment approved by the Engineer. Solvent welding is not acceptable. The Engineer reserves the right to reject any proposed seaming method it believes unacceptable. <u>Double hot wedge fusion welding shall be the predominant seaming method.</u> Additional concepts and requirements of proper field seaming include the following:
   a. All geomembrane shall be seamed the same day that the geomembrane is deployed.
   b. All geomembrane shall be ballasted immediately after deployment to prevent uplift by winds.
   c. A moveable protective layer of plastic or approved material may be placed directly below each overlap of geomembrane that is to be seamed. This is to prevent any moisture build-up between the sheets to be welded. The protective layer must be removed after welding.

d. All foreign matter (dirt, moisture, oil, etc.) shall be removed from the edges to be bonded. For extrusion welds, the bonding surfaces must be thoroughly cleaned by mechanical abrasion or alternate methods approved by the Engineer to remove surface cure and prepare the surfaces for bonding.
e. Grinding:
   1) All abrasive buffing shall be performed using No. 80 grit or finer sandpaper.
   2) The grinding shall be performed so that any and all grind marks are perpendicular to the edge of sheet.
   3) No grinding greater than 1/4 inch outside the welds is permitted or the Engineer can require patching.
f. No solvents shall be used to clean the geomembrane.
g. As much as practical, field seaming shall start from the top of the slope down. This will minimize large wrinkles from becoming trapped that require cutting and patching.
h. Tack welds (if used) shall use heat only; no double sided tape, glue or other method will be permitted.
i. The geomembrane should be seamed completely to the ends of all panels to minimize the potential of tear propagation along the seam.
j. Seaming will extend to the outside edge of panels to be placed in anchor trenches. If required, a firm substrata should be provided by using a flat board, or similar hard surface directly under the seam overlap to achieve proper support across the anchor trench.
k. The completed geomembrane shall not exhibit <u>any</u> "trampolining" during late morning to early evening hours. All areas exhibiting trampolining must be repaired as directed by the Engineer. Additional slack (i.e.: 1-3%) shall be allowed on the side slopes to reduce the potential for trampolining.
l. All field seams must be uniform in appearance, width and properties, and shall not exhibit warping due to overheating form welding.
m. The peel and shear strengths of the welded seams must comply with the strength criteria stated in Table 2672-B found in this Section as tested according to Part 3.4I of this Section.
n. Ambient Weather Conditions:
   1) Ambient temperature is measured 18 inches above the geomembrane surface.
   2) The Geosynthetic Installer shall supply instrumentation for measurement of ambient temperature.
   3) Welding of field seams shall not take place except during suitable ambient weather conditions, as confirmed by field trial test welds.
   4) No seaming should be attempted above 40°C (104°F) ambient air temperature
   5) Below 5°C (41°F) ambient air temperature, preheating of the geomembrane will be required, unless it is demonstrated that this is not necessary (i.e., acceptable test (start-up) seams that duplicate, as closely as possible, actual field conditions can be achieved). Preheating may be achieved by natural and/or artificial means (shelters and heating devices).
o. Seams at the panel corners of 3 or 4 sheets shall be completed with a circular patch approximately 12 inches in diameter, extrusion welded to the parent sheets, or with a "T" weld at suitable locations.

C. Anchor Trench
   1. See Section 02324 for anchor trench excavation and backfilling.
   2. Care should be taken when backfilling the trench to prevent any damage to the geomembrane.

D. Temporary Ballast Loading

1. Adequate temporary ballast loading that will not damage the geomembrane shall be placed by the Geosynthetic Installer over the geomembrane during installation as needed to prevent uplift by wind and by rapid changes in barometric pressure.
2. Temporary ballast loading shall be in addition to the anchor trenches.
3. Sufficient temporary ballast loading shall be placed along panel edges, in particular, as needed to minimize the risk of wind flow under the panels.
4. Continuous loading shall be provided at all panel edges during days off, at night, and whenever inclement or stormy weather is anticipated along unseamed edges.
5. If high winds are expected, boards along the edge of unseamed panels, with weighted sandbags on top, may be used to anchor the geomembrane on the landfill cover.
6. Staples, U-shaped rods or other penetrating anchors shall <u>not</u> be used to secure the geomembrane on the landfill cover.
7. Any damage to the geomembrane or soil liner including damage due to construction activities or wind, rain, hail, or other weather shall be the sole responsibility of the Geosynthetic Installer.
8. All temporary ballast loading shall be removed by the Geosynthetic Installer prior to demobilizing from the site unless otherwise approved by the Owner.

E. Pipe Penetrations (if applicable)
1. Structures
   a. Penetrations through the LLDPE geomembrane at structures shall be made by welding the 40-mil LLDPE geomembrane to the HDPE stock plate or HDPE anchor strips as shown on the Drawings.
   b. The Geosynthetic Installer shall use caution when working near or around the pipe penetration connection to prevent damage to the HDPE pipe or HDPE anchor strip.
2. Pipe Vents
   a. Penetrations through the LLDPE geomembrane at the pipe vent locations shall be made with a prefabricated sleeve and skirt in accordance with the details shown on the Drawings.
   b. The sleeve and skirt shall be extrusion welded to the LLDPE geomembrane and all around the outside of the pipe circumference.
   c. The sleeve and skirt shall consist of LLDPE geomembrane as specified on the Drawings and complying with the requirements of Part 2 of this Section.
   d. Extrusion welds shall comply with the requirements of Part 3.3B of this Section.
   e. The pipe penetrations shall be fabricated in accordance with the Manufacturer's recommendations, subject to approval by the Engineer.
   f. Aggregate and geotextile for the pipe vents shall meet the requirements of Section 02060 and Section 02674 of the Specifications

3.4 FIELD QUALITY CONTROL

A. The Geosynthetic Installer shall adopt and use the quality assurance forms prepared by the Engineer, or other forms approved by the Engineer, during all applicable phases of geomembrane installation, inspection and testing. The Geosynthetic Installer can request to use his forms. The forms must be submitted to the Engineer at least two weeks prior to geomembrane installation for review and approval.

B. The geomembrane installation will be inspected on a full-time basis by the Engineer.
1. The Engineer will conduct his own observations and perform quality control tests in addition to those performed by the Geosynthetic Installer.
2. Testing of the seams and repairs will be conducted by the Geosynthetic Installer under observation by the Engineer.
3. The Engineer or a designated, independent geosynthetics laboratory may perform additional testing, as required by these detailed Specifications or as required in the judgment of the Engineer to verify that the LLDPE sheet and seams meet these Specifications.

4. Quality control by the Engineer will include monitoring:
   a. Geomembrane handling and panel deployment
   b. Field seaming or welding of geomembrane sheets and non-destructive testing of field seams or welds
   c. Installation of anchor trenches
   d. Placement and maintenance of temporary ballast loading
   e. Attachment of the geomembrane to LLDPE pipes and anchor strips
   f. Construction of pipe vents
5. The Engineer will also monitor geomembrane repair work, and evaluate the adequacy and acceptability of all repair work.

C. All geomembrane sheet, seams and patches will be tested and evaluated prior to acceptance. In general, testing of the sheet will be conducted by the Geosynthetic Installer according to the standards specified in Table 2672-B found this Section.

D. Test Seams
1. The Installer shall maintain and use equipment and personnel at the site to perform testing of test seams.
2. Frequency:
   a. Test seams will be made at least twice each day prior to commencing field seaming.
   b. Test seams will be made at the beginning of each seaming period, after any interruption in power, after any prolonged idle period during the day, when changes in storing equipment occur, at least once every four hours during continuous operation of each welding machine, and at the request of the Engineer at any other time during the day.
3. Each seamer/welder shall prepare a test strip using the welding apparatus assigned to him.
4. Test seams will be made on fragment pieces of geomembrane to verify that seaming conditions are adequate.
5. The Engineer shall complete the Test Seam CQA Form immediately after each test.
6. Requirements for test seams are as follows:
   a. The test seam sample will be at least 6 feet long by 1 foot wide with the seam centered lengthwise.
   b. Six adjoining specimens 1-inch wide each will be cut from the test seam sample.
   c. At the Engineer's option the shear tests may be eliminated for test seams.
   d. These specimens will be tested in the field with a tensiometer and/or manual seam tester for both shear (3 specimens) and peel (3 specimens).
   e. For dual wedge, both inside and outside welds shall be tested in peel.
   f. Test seams will be tested by the Geosynthetic Installer under observation of the Engineer.
   g. The Geosynthetic Installer shall supply all necessary knowledgeable personnel and all necessary testing equipment.
   h. Film Tear Bond (FTB) type failures will be the criterion for qualification of the test seam. The specimens should not fail in the weld.
   i. A passing test seam will be achieved when the criteria presented in Table 2672-B are satisfied. The sample weld shall successfully pass the test requirements before either the welder or welding apparatus are allowed to operate on production welds.
   j. If a test seam fails, the entire operation will be repeated.
   k. If the additional test seam fails, the seaming apparatus or welding technician will not be accepted and will not be used for seaming until the deficiencies are corrected and two consecutive successful full test seams are achieved.
   l. Test seam failure is defined as failure of any one of the specimens tested in shear or peel.
7. The Engineer will approve all test seam procedures and results.
8. The following shall be recorded in the Geomembrane Trial Seam Log by the Engineer.

9. The remainder of the successful test seam sample and the tested specimens will be assigned a number and marked accordingly by the Engineer, who will also log the date, hour, ambient temperature, number of seaming unit, name of seamer, and pass or fail description.

E. Production Seams - 100% of the production seams will be tested by the Geosynthetic Installer continuously using non-destructive techniques and at specified intervals using destructive tests as specified in this Section. Production seams shall be witnessed by the Engineer's representative.

F. All areas failing nondestructive test procedures described in Part 3.4 F of this Section shall be clearly marked both on the geomembrane itself and on all applicable CQA forms.

G. Nondestructive Testing

1. The Geosynthetic Installer shall continuously test every field weld (i.e., 100 percent of the length of all field seams), including field welds around patches, using non-destructive testing techniques. These tests shall be performed in the presence of the Engineer.
2. Single Weld Seams (extrusion welds):
   a. The Geosynthetic Installer shall maintain and use equipment and personnel at the site to perform continuous vacuum box testing in general accordance with ASTM D5641 under the observation of the Engineer on all single weld production seams except those corner seams where vacuum box testing is impossible.
   b. The system shall be capable of applying a vacuum of at least 5 psi.
   c. The vacuum shall be held for a minimum of 15 seconds for each section of seam.
   d. Once the soap solution is uniformly placed over the weld and suction applied to the seam any bubble formation must be noted and the corresponding defective area identified, marked, and subsequently repaired.
   e. Where vacuum box testing is not possible, spark testing or an approved alternative by the Engineer will be used.
3. Double-Wedge Fusion Weld Seams:
   a. The Geosynthetic Installer shall maintain and use equipment and personnel to perform air pressure testing under the observation of the Engineer of all double-wedge fusion weld seams with a continuous air gap between the two welds and which are greater than 20 ft.
   b. Double-wedge fusion weld seams less than 20 ft. may be vacuum box tested as specified in Part 3.4F2 of this Section.
   c. Pressure Loss Test:
      1) Pressure loss tests shall be conducted in accordance with the procedures outlined in "Pressurized Air Channel Test for Dual Seamed Geomembranes," Geosynthetic Research Institute Test Method GM-6.
      2) The system shall be capable of applying a pressure of between 25 psi and 30 psi for not less than 5 minutes.
      3) Following a 2 minute pressurized stabilization period, pressure losses over a measurement period of 5 minutes shall not exceed 3 psi.
      4) After the 5 minute testing period, the end of the seam shall be cut open and pressure loss monitored to verify the entire length of the seam channel is open. If no pressure loss is realized, the location of the blocked channel must be found and the remainder of the seam tested separately.
      5) If a non-compliant drop of pressure is noted, pressure testing may be repeated in a step fashion each time halving the length of weld being tested until the extent of the defective weld is determined.
      6) Vacuum box testing (ASTM D5641) may also be used to locate a defective area in the top weld or in the top of the air channel.
      7) The air pressure test results shall be documented on all applicable CQA forms.
   d. The length of welded section tested by air pressure shall not exceed 450 feet, without prior approval by the Engineer.

e. Once the defect is found, it shall be clearly identified, marked, and repaired. Any defective shall be repaired so that it meets or exceeds the minimum requirements specified in Part 3.4H of this Section.
f. Double weld seams will also be visually inspected on 100% of the seam. If necessary the outside flap can be pulled back to aid in the visual observation.

H. Destructive Testing

1. Laboratory Destructive Testing (LDT) is defined as 18"W X 54"L (of seam) samples cut on 500' centers for both extrusion and double welded seams. Field destructive testing (FDT) is defined as 12"W X 6”L samples cut at the end of each seamed area exceeding 200 feet.
   a. Laboratory Destructive Testing (LDT)
      1) Sampling:
         a) LDT will be performed on an average of every 500 linear feet of production seam. The locations will be selected by the Engineer.
         b) Samples will be 18" X 54" in order to provide one sample to the archive, one sample to the Engineer for laboratory testing, and one sample to be retained by the Geosynthetic Installer for possible field and/or additional laboratory testing at the option of the Engineer or Geosynthetic Installer.
         c) The name of the sample (e.g. LDT-1), date, time, equipment, seam number, and seaming parameters will be marked on each sample and recorded by the Engineer in the Geomembrane Defect Log.
      2) Testing:
         a) Tests shall be conducted using a calibrated tensiometer and must meet the qualitative and quantitative criteria outlined criteria listed in Table 2672-B found in this Section.
         b) The peel strength criteria shall apply to both the top and bottom welds of double wedge fusion welds.
         c) Testing requirements are as follows:
            (1) Each sample shall be large enough to test five specimens in peel and five specimens in shear.
            (2) The average values of each set of five specimens must meet the specification, and four of the five specimen tests must meet the specifications for the seam as specified in Table 2672-B to be considered a passing seam.
            (3) If the average of the five specimens is adequate, but one of the specimens is failing, values for the failing specimen must be at least 80 percent of the values required for the seam for the sample to pass.
            (4) All samples must fail in film tear bond (FTB) and/or the geomembrane must fail before the weld.
         d) Failing Tests:
            (1) Samples which do not pass the shear and peel tests will be re-sampled from locations at least 10 feet on each side of the original location.
            (2) These two re-test samples must pass both shear and peel testing.
            (3) If these two samples do not pass, then additional samples will continue to be obtained until two consecutive samples on each side of the original sample pass the field seam criteria and the questionable seam area is defined.
            (4) At that point, the extent of the original defect in both directions along the field seam will be considered isolated and the Geosynthetic Installer may then:
               (a) Either cap, re-weld and re-test the seam up to and including the closest of the two passing samples, and patch and weld the hole of the furthest passing sample; or
               (b) Cap, re-weld and re-test the entire length of sampling.

(c) If approved by the Engineer, double-wedge fusion welds may be repaired by extrusion welding the flap of the top sheet to the bottom sheet if the seam non-compliance is due to a non-FTB failure of the destructive test sample.

(d) If the length of the questionable seam area is defined to be excessive by the Engineer, a cap patch may be required over the entire seam with nondestructive testing prior to acceptance of the seam.

b. Field Destructive Testing (FDT)

1) FDT shall be 12"W X 6"L samples cut out at the beginning and end of each seam exceeding 200' in length.

2) The name of the sample (e.g. FDT-1), date, time, equipment, seam number, and seaming parameters will be marked on each sample and recorded by the Engineer in the Geomembrane Defect Log.

3) Three 6"W X 1"L specimens will be tested in peel from each sample by the Geosynthetic Installer using the Geosynthetic Installer's Field Tensiometer or qualitative peel tester at the option of the Geosynthetic Installer. No qualitative peel strength values need to be recorded with the Field Destructive test, but each specimen must meet all qualitative criteria listed in Table 2672-B found in this Section.

4) The Engineer will approve all seam field and laboratory test procedures and results. All laboratory destructive test specimens will be marked with the seam number and letters then bound together for a particular seam and stored in the Owner's archives. The specimens for the FDT need not be retained.

2. Each sample area will be clearly marked both on the geomembrane itself (LDT or FDT) using the procedures outlined in the marking Section.

3. All areas cut out for testing should be immediately patched by the Geosynthetic Installer and the patches should be tested and approved by the Engineer. Patches shall extend a minimum of 6 inches beyond the cut area.

4. A passing double welded seam will be achieved in peel (ASTM D6392) when:
   a. Failure is by Film Tear Bond (FTB).
   b. Yield strength for the seam is not less than 72 percent of the minimum tensile strength at yield as specified in Table 2672-B found in this Section; and
   c. No greater than 25 percent of the seam width peels (separates) at any point; and
   d. The failed sheet exhibits elongation, prior to failure.

5. Both sides of the double welded seam must be tested and must meet all of the criteria listed above for peel.

6. A passing double welded seam will be achieved in shear (ASTM D6392) when:
   a. Failure is by FTB; and
   b. Yield strength for the seam is not less than 95 percent of the minimum tensile strength at yield specified in Table 2672-B found in this Section; and

7. A passing extrusion welded seam will be achieved in peel (ASTM D6392) when:
   a. Failure is by FTB; and
   b. Yield strength for the seam is not less than 62 percent of the minimum tensile strength at yield specified in Table 2672-B; and
   c. No greater than 25% separation occurs from the edge of the sheet at any point; and
   d. The failed sheet exhibits ductility prior to failure.

8. A passing extrusion welded seam will be achieved in shear (ASTM D6392 modified) when:
   a. Failure is by FTB; and
   b. Yield strength for the seam is not less than 95 percent of the minimum tensile strength at yield specified in Table 2672-B; and

I. Repair:

1. The Geosynthetic Installer shall visually inspect the entire geomembrane surface for any defects including, but not limited to, seam imperfections, badly scuffed areas, scratches, blisters, tears, rips, holes, pinholes, and punctures. He shall identify, mark, and repair all noted defects, as well as defects designated by the Engineer.
2. Damaged and Sampled Area
   a. All geomembrane defects (scratches, blisters, rips, punctures, tears, holes, pinholes, creases, folds, etc.) and holes created by removal of samples or coupons for destructive testing shall be marked and repaired.
   b. Damaged and sample coupon areas of geomembrane shall be repaired by the Geosynthetic Installer by completely covering the defect or hole with an oval-shaped piece of the corresponding LLDPE geomembrane material, and continuously welding the patch to the geomembrane sheet using an extrusion weld construction.
      1) Patches shall extend a minimum of 6 inches beyond the damaged or cut area.
      2) No repairs shall be made to seams by application of an extrusion bead to a seam edge previously welded by fusion or extrusion methods.
   c. Holes created by removal of samples or coupons for destructive testing shall be marked, patched and repaired as specified in Part 3.3G of this Section for geomembrane defects.
   d. All geomembrane repairs shall be documented including date, geomembrane panel identification number, repair location, type of defect, cause of defect and details of repairs made.
   e. Repaired areas will be tested for seam integrity as specified in part 3.4F of this Section.
   f. Damaged materials are the property of the Geosynthetic Installer and will be removed from the site at the Geosynthetic Installer's expense unless authorized by the Owner to dispose of on-site.
   g. The Geosynthetic Installer will retain all ownership and responsibility for the geomembrane until acceptance by the Engineer.
   h. The Engineer shall accept the geomembrane after the installation and repair are complete, and after the Engineer has received all necessary documentation for the installation in accordance with these specifications.
3. Seams at Panel Corners
   a. Seams at the panel corners of 3 sheets shall be completed with a circular patch approximately 12 inches in diameter, extrusion welded to the parent sheet, or with a "T" weld at suitable locations.
   b. If the Geosynthetic Installer wishes to use a different method, samples must be submitted to the ENGINEER and tested accordingly.

J. Marking on Geomembrane by the Geosynthetic Installer
1. The Geosynthetic Installer will mark directly on the geomembrane as described herein for the purpose of readily identifying panels, seams, repairs and destructive test locations.
2. Panel Identification
   a. Each panel indicated on the pre-construction panel layout drawings will be numbered sequentially using the format P1, P2, etc.
   b. Panels in the field must be numbered in the order in which the panels are actually laid regardless of preconstruction numbering.
   c. The panels will be permanently marked in white (red for white surfaced geomembrane) with letters approximately 12" high (and 1/3 the way down the slope for geomembranes on slope).
   d. Each panel will be marked with the Manufacturer's roll number.
3. Seam Identification
   a. Each seam will be labeled as agreed upon by the Geosynthetic Installer and the CQA Engineer.
   b. Typically, a seam will be designated by the panels it joins, i.e., the seam joining Panel 1 (P1) and Panel 2 (P2) will be designated P1/P2.
4. Quality Control Marking

a. Following the completion of each seam, patch or repair, the welding technician will write, at the end of the seam or in the middle of the patch or repair, the following: the initials of the technician, date welded, time welded, and welder unit number. The markings will be done clearly with a white or red permanent marking pen or pencil.
b. Similarly, after each quality control test, the CQAO or a representative will record the following immediately adjacent to the area tested: initials of QC TECHNICIAN performing the test, date of the test, type of test (i.e. VB, SP, AP for vacuum box, spark test and air pressure test respectively) and the words "pass" or "fail". For the air pressure test, the QC Technician must also define the limits or zone of the test as well as the amount of pressure loss observed. Again, a permanent white or red marking pen is required. If the test fails and the necessary repair is made, the technician will cross out the previous markings and mark appropriately for the new test results.
c. Destructive test samples will be clearly circled with white or red permanent pen or pencil and the words "FDT" or "LDT" as defined in the specifications and marked in white or red. The CQAO will mark the words "pass" or "fail" as appropriate. Similarly, any other area needing repair will be clearly marked in white or red permanent pen or pencil to identify where the repair is required to be made.
d. The CQAO will mark areas in need of repair using white (red for white surfaced geomembrane) marking pens.
e. Graffiti, offensive marking or any marking not necessary to the project will not be permitted.

3.5 PROTECTION OF WORK

A. Protect installed geomembrane according to geomembrane manufacturer’s instructions. Repair or replace areas of geomembrane damaged by scuffing, punctures, traffic, rough subgrade, or other unacceptable conditions.

B. No support equipment, tools, or personnel can readily cause damage to the LLDPE geomembrane shall be allowed on the geomembrane during and after installation unless approved by the Engineer. Personnel working on the geomembrane shall not smoke, wear damaging shoes, bring glass of any kind onto geomembrane, dispose of trash or other debris, or engage in any activity that could damage the geomembrane.

C. The passage of construction equipment, other than light rubber-tired equipment approved by the Engineer, over any exposed LLDPE geomembrane surface is strictly prohibited. Light rubber-tired equipment exerting a contact stress less than 6 psi will be allowed provided proper care is taken when operating the vehicle to avoid pulling, displacing or damaging the geomembrane.

D. Between construction of partial sections of the geomembrane, leading edges of the geomembrane may be exposed or buried for extended periods of time prior to their joining to adjacent, subsequent membrane sections. The combined action of abrasive soil and equipment impact stresses may "etch" unprotected membrane surfaces sufficiently to affect seam strengths. Therefore, it is necessary to protect leading edges in high activity areas with sacrificial layers of geotextile and LLDPE sheet until they are ready for final seaming. As a minimum, each leading edge to be seamed that must be buried or which must be exposed for periods of one month or longer shall be continuously covered by a layer of LLDPE sheet. The geotextile shall be nonwoven and have a minimum weight of 8 oz per square yard. The sacrificial LLDPE sheet shall have a minimum thickness equal to that of the geomembrane to be protected. Both protective layers shall have a minimum width of 2 feet. The protective cover sheets shall be either covered with soil or weighted with sand bags to prevent displacement by wind. The edge of the sheet to be protected shall be approximately centered beneath the overlying protective layers prior to burial or weighing with sandbags. Leading edges located in areas expected to receive direct traffic from construction equipment shall be buried under a minimum thickness of one foot of buffer soil.

E. Fuel and Oil Spill Clean-Up

1. All spills or leaks of fuels and oils from equipment and vehicles on the surface of the geomembrane shall be thoroughly cleaned with soap and water, or, at the discretion of the Engineer, the affected geomembrane shall be cut, removed and replaced with new geomembrane material.
2. Subgrade materials contaminated with fuel or oil shall be excavated and replaced to the extent designated by the Owner.
3. Contaminated material shall be properly disposed of off-site by the Contractor at no expense to the Owner.

F. Any damage to the geomembrane shall be reported to the Engineer, and repaired by the Geosynthetic Installer at no expense to the Owner.

END OF SECTION

SECTION 02673
WOVEN GEOTEXTILE

PART 1 - GENERAL

1.1 SUMMARY

A. Section Includes:
   1. Woven geotextile for roadway subgrades.

B. Description of Work: Includes all labor, tools, geotextile material, placement, supervision, transportation, installation, equipment, sewing, repairs, and all incidentals necessary to complete the work as specified on the Drawings and in these Specifications and in accordance with the CQA Plan for the installation of geotextiles. Includes additional quantities necessary to provide a complete item of Work

C. Related Sections:
   1. Section 02060 – Aggregate.

1.2 UNIT PRICE – MEASUREMENT AND PAYMENT

A. Payments will be made to the Contractor in accordance with the specified method of measurement and the unit or lump sum prices stipulated in the accepted Bid.

B. This method of payment will constitute complete compensation for all work required by the Contract Documents.

1.3 REFERENCES:

A. American Society for Testing and Materials (ASTM) standards
   1. ASTM D3786 Standard Test Method for Hydraulic Burst Strength of Knitted Goods and Non-woven Fabrics (Diaphragm Bursting Strength Tester Method).
   2. ASTM D4354 Practice for Sampling of Geosynthetics for Testing.
   3. ASTM D4355 Test Method for Deterioration of Geotextiles from Exposure to Ultraviolet Light and Water (Xenon-Arc Type Apparatus).
   4. ASTM D4491 Standard Test Method for Water Permeability of Geotextiles by Permittivity.
   5. ASTM D4751 Standard Test Method for Determining Apparent Opening Size of a Geotextile.
   6. ASTM D4533 Test Method for Trapezoidal Tearing Strength of Geotextiles.
   7. ASTM D4632 Test Method for Grab Breaking Load and Elongation of Geotextiles.
   8. ASTM D4759 Practice for Determining the Specification Conformance of Geosynthetics.
   9. ASTM D4833 Test Method for Index Puncture Resistance of Geotextiles, Geomembranes and Related Products.
   10. ASTM D4873 Guide for Identification, Storage and Handling of Geotextiles.
   11. ASTM D5494 Test Method for the Determination of Pyramid Puncture Resistance of Unprotected and Protected Geomembranes.
   12. ASTM D6241 Test Method for Static Puncture Strength of Geotextiles and Geotextile Related Product Using a 50-mm Probe.

B. AASHTO Specification
   1. M288-00 Geotextile Specification for Highway Applications.

1.4 SUBMITTALS

A. Manufacturer's Product Information
   1. As part of their bid, the Contractor shall submit for the geotextile to be used:
      a. Name of Manufacturer.
      b. Product name.
      c. Style number.
      d. Chemical composition of the filaments and yarns.
      e. Product data sheets.
      f. Manufacturer's installation instructions.
   2. At a minimum, the Manufacturer will perform the tests at the frequencies given in Table 2673-A found in this Section 02673 on the geotextile prior to shipping the material to the site.

1.5 QUALITY ASSURANCE

A. Perform Work in accordance with these Specifications.

B. The Manufacturer shall sample and test the geotextile material, at minimum frequencies specified in Table 2673-A.

C. Any geotextile sample that does not comply with this Section 02673 shall result in rejection of the roll from which the sample was obtained. The Contractor shall replace any rejected rolls at no additional cost to Owner.

D. If a geotextile sample fails to meet the quality control requirements of this Section 02673, the Contractor shall require that the Geotextile Manufacturer sample and test each roll manufactured in the same lot or batch, or at the same time, as the failing roll. Sampling and testing of rolls shall continue until a patter of acceptable test results is established.

E. General manufacturing procedures shall be performed in accordance with the Manufacturer's internal quality control guide and/or documents.

F. The Manufacturer shall be a well-established firm with more than two years experience in the manufacture of geotextiles.

G. The Installer shall be trained and qualified to install geotextiles.

H. The Engineer shall examine the geotextile rolls upon delivery to the site and report any deviations from these Specifications to the Contractor.

I. The need for conformance testing shall be determined by the Engineer for rolls delivered to the site.
   1. For this purpose, the Engineer shall take a sample three feet (along roll length) by roll width according to ASTM D4354. The sample shall be properly marked, wrapped and sent to an independent laboratory for conformance testing.
   2. The pass or fail of the conformance test results shall be determined according to ASTM D4759.

1.6 DELIVERY, STORAGE AND HANDLING

A. Geotextile labeling, shipment, and storage shall follow ASTM D 4873.

B. Product labels shall clearly show:

1. Manufacturer or Supplier name.
2. Product identification.
3. Lot or batch number.
4. Roll number.
5. Roll dimensions (length and width).

C. Each shipping document shall include a notation certifying that the material is in accordance with the Manufacturer's Certificate.

D. Each geotextile roll shall be wrapped with a material that will protect the geotextile, including the ends of the roll, from damage due to shipment, water, ultraviolet sunlight, mud, dust, puncture, and other damaging deleterious conditions. The protective wrapping shall be maintained during periods of shipment and storage.

E. During storage, geotextile rolls shall be elevated off the ground and adequately covered to protect them from the following: site construction damage, precipitation, extended ultraviolet radiation including sunlight, chemicals that are strong acids or strong bases, flames including welding sparks, temperatures in excess of 160°F (71°C), and any other environmental condition that may damage the property values of the geotextile.

F. Transport and handle geotextile with equipment designed to protect it from damage. Equipment used to unload, stack or transport geotextile shall not damage protective wrap.

G. Upon delivery at the job site, the Contractor shall ensure that the geotextile rolls are handled and stored in accordance with the Manufacturer's instructions as to prevent damage.

H. The geotextile rolls shall not be stacked more than three rolls high, or as otherwise recommended by the Manufacturer.

I. Do not use materials damaged during storage or handling. If the geotextile is not packaged and a roll is damaged during shipment, it shall be rejected.

J. If only the outermost surface of the roll is affected, it may be peeled back, cut, and wasted if approved by the Engineer (i.e., it shall be treated as if it were the protective packaging for the remainder of the roll).

K. The geotextile shall be relatively free of holes or any sign of contamination by foreign matter. The Engineer may reject all or portions of units (or rolls) of the geotextile if significant quantities of production flaws are observed.

1.7 ENVIRONMENTAL REQUIREMENTS

A. Conduct operations not to interfere with, interrupt, damage, destroy, or endanger integrity of surface or subsurface structures or utilities, and landscape in immediate or adjacent areas.

1.8 FIELD MEASUREMENTS

A. Verify field measurements prior to fabrication.

PART 2 PRODUCTS

2.1 GEOTEXTILE

A. Woven geotextile shall be that which is specified on the Drawings. Unless otherwise noted on the Drawings, geotextile Suppliers shall furnish materials whose Minimum Average Roll Values meet or exceed the criteria specified in Table 02673-B. The Manufacturer shall provide test results for these procedures, as well as a certification that the material properties meet or exceed the specified values.

1. Minimum Average Roll Value (MARV) shall be based on Manufacturer's data and shall be calculated as the mean value of the property of interest plus or minus two standard deviations, as appropriate.
2. Where material properties vary among the machine and cross-machine directions, the MARV shall apply to the direction providing the lowest value (when a minimum is specified) or the highest value (when a maximum value is specified).

B. The geotextiles provided by the supplier shall be stock products.

C. The geotextile for the roadbase shall be woven geotextile comprised of 100 percent polypropylene or 100 percent polyester material.

D. The geotextile shall be manufactured from first quality virgin polymer.

E. The supplier shall not furnish products specifically manufactured to meet the Specifications of this project unless authorized by the Owner and Engineer.

TABLE 2673-A
GEOTEXTILE REQUIRED PHYSICAL PRE-SHIPPING TESTING

PROPERTY	TEST METHOD	MINIMUM FREQUENCY
Grab Tensile Strength	ASTM D4632	Every 100,000 ft^2
Grab Tensile Elongation	ASTM D4632	Every 100,000 ft^2
Trapezoid Tear Strength	ASTM D4533	Every 100,000 ft^2
Mullen Burst Strength	ASTM D3786	Every 100,000 ft^2
Puncture Strength	ASTM D4833	Every 100,000 ft^2
Apparent Opening Size (AOS)	ASTM D4751	1 per production lot (filter geotextiles only)
Permittivity	ASTM D4491	1 per production lot (filter geotextiles only)
UV Resistance	ASTM D4355	1 per production lot

TABLE 2673-B
GEOTEXTILE REQUIRED PHYSICAL AND HYDRAULIC PROPERTIES

PROPERTIES AND REQUIREMENTS(1)	UNITS	TEST METHOD	MINIMUM SPECIFIED VALUES (1)
			Roadbase
Grab Tensile Strength	lb	ASTM D4632	315
Grab Tensile Elongation	%	ASTM D4632	15
Trapezoid Tear Strength	Lb	ASTM D4533	120
Mullen Burst Strength	lb/in^2	ASTM D3786	400
Puncture Strength	Lb	ASTM D4833	145
Apparent Opening Size (AOS)	US Sieve	ASTM D4751	40
Permeability	cm/sec	ASTM D4491	0.05
Flow Rate	(gpm/ft^2)	ASTM D4491	--
UV Resistance	% strength retained	ASTM D4355	70

Note:
(1) All values represent minimum average roll values (i.e., any roll in a lot should meet or exceed the values in this table) except for UV resistance, which is a minimum value.

PART 3 EXECUTION

3.1 EXAMINATION

A. Prior to implementing any geotextile work, the Installer shall carefully inspect the subgrade and verify that all work is complete to the point where the installation of the geotextile may properly commence without adverse impact.

B. If the Contractor has any concerns regarding the installed work, the Engineer and/or Owner shall be notified in writing within 48-hours of his site inspection. Failure to inform the Engineer and/or Owner in writing or installation of the geotextile will be construed as Contractor's acceptance of all prior related work.

C. Any geotextile that does not comply with Table 2673-B of this Section 02673 shall be rejected and replaced with new material in accordance with these Specifications, at no additional cost to Owner.

3.2 PREPARATION

A. Prior to implementing any of the work described in this Section 02673, the Installer shall become thoroughly familiar with all portions of the work within this Section 02673 or related work, as necessary for successful completion of the Work.

3.3 INSTALLATION

A. The Installer shall handle all geotextile in such a manner as to ensure they are not damaged in any way.

B. The geotextile shall be rolled down slopes and grades in such a manner as to continuously keep the geotextile in tension by self weight. In the presence of wind, all geotextiles shall be weighted by sandbags or approved equivalent. Such anchors shall be installed during placement and shall remain in place until replaced with cover material.

C. After unwrapping the geotextile from its opaque cover, the geotextile used for the roadbase shall not be left exposed for a period in excess of 20 days unless a longer exposure period is approved by the Engineer based on a formal demonstration from the Contractor that the geotextile is stabilized against UV degradation for the proposed period of exposure.

D. Geotextiles shall be overlapped a minimum of 6 inches.

E. Stretch geotextile to its full width.

3.4 FIELD QUALITY CONTROL

A. The Contractor shall be aware of the activities outlined in the CQA Plan and shall account for these CQA activities in the Work Schedule.

B. The need for conformance testing shall be determined by the Engineer.

C. The finished geotextile shall have good appearance qualities. It shall be free from such defects that would affect the specific properties of the geotextile, or its proper functioning.

D. Defects and Repairs:
1. Any holes or tears in the geotextile shall be repaired with a patch made from the same geotextile. The patch shall be placed with a minimum of 12 inches overlap in all directions.
2. Care shall be taken to remove any soil or other material, which may have penetrated the torn geotextile.

3.5 PROTECTION OF FINISHED WORK

A. The Contractor shall use all means necessary to protect all prior Work and all materials and completed work of other Sections of these Specifications.

B. The geotextile shall be covered as soon as possible after installation and approval. The geotextile shall not be exposed to precipitation prior to being installed and shall not be exposed to direct sun light for more than 20 days after installation.

C. Placement of Cover Material:
1. Placement of the cover soil or aggregate base course shall proceed immediately following placement and inspection of the geotextile
2. The cover material shall be placed on the geotextile in such a manner that ensures that:
   a. The geotextile and underlying materials are not damaged.
   b. Minimal slippage occurs between the geotextile and underlying layers.
   c. Wrinkling of geosynthetics does not occur.

D. In the event of damage, the Installer shall immediately make all repairs and replacements necessary at the expense of the responsible party, to the approval of the Engineer.

E. Geotextiles shall be overlapped a minimum of 3 to 6 inches.

F. Protect installed geotextile according to the Manufacturer’s instructions.

END OF SECTION

SECTION 02674
NONWOVEN GEOTEXTILES

PART 1 - GENERAL

1.1 SUMMARY

A. Section Includes:
1. Nonwoven geotextile for the:
   a. perimeter drain;
   b. seepage collar;
   c. sub-base for rip-rap outlet aprons.
   d. miscellaneous erosion control devices.

B. Description of Work: Includes all labor, tools, geotextile material, placement, supervision, transportation, installation, equipment, sewing, repairs, and all incidentals necessary to complete the work as specified on the Drawings and in these Specifications and in accordance with the CQA Plan for the installation of geotextiles. Includes additional quantities necessary to provide a complete item of Work

C. Related Sections:
1. Section 02374 – Erosion Control Devices.
2. Section 02620 – Perimeter Drain.
3. Section 02672 – LLDPE Geomembrane

1.2 UNIT PRICE – MEASUREMENT AND PAYMENT

A. Payments will be made to the Contractor in accordance with the specified method of measurement and the unit or lump sum prices stipulated in the accepted Bid.

B. This method of payment will constitute complete compensation for all work required by the Contract Documents.

1.3 REFERENCES:

A. American Society for Testing and Materials (ASTM) standards
1. ASTM D3786 Standard Test Method for Hydraulic Burst Strength of Knitted Goods and Non-woven Fabrics (Diaphragm Bursting Strength Tester Method).
2. ASTM D4354 Practice for Sampling of Geosynthetics for Testing.
3. ASTM D4355 Test Method for Deterioration of Geotextiles from Exposure to Ultraviolet Light and Water (Xenon-Arc Type Apparatus).
4. ASTM D4491 Standard Test Method for Water Permeability of Geotextiles by Permittivity.
5. ASTM D4751 Standard Test Method for Determining Apparent Opening Size of a Geotextile.
6. ASTM D4533 Test Method for Trapezoidal Tearing Strength of Geotextiles.
7. ASTM D4632 Test Method for Grab Breaking Load and Elongation of Geotextiles.
8. ASTM D4759 Practice for Determining the Specification Conformance of Geosynthetics.
9. ASTM D4833 Test Method for Index Puncture Resistance of Geotextiles, Geomembranes and Related Products.
10. ASTM D4873 Guide for Identification, Storage and Handling of Geotextiles.
11. ASTM D5261 Test Method for Measuring Mass per Unit Area of Geotextiles.

1.4 SUBMITTALS

A. Manufacturer's Product Information

1. As part of their bid, the Contractor shall submit for the geotextile to be used:
   a. Name of manufacturer.
   b. Product name.
   c. Style number.
   d. Chemical composition of the filaments and yarns.
   e. Product data sheets.
   f. Manufacturer's installation instructions.
2. Submit the results of factory testing to the Construction Quality Control Office (CQAO) prior to initiating field work.
3. At a minimum, the Manufacturer will perform the tests at the frequencies given in Table 02674-A found in this Section 02674 on the geotextile prior to shipping the material to the site.
4. A written certificate from the Manufacturer stating that the materials supplied are in compliance with this Specification:
   a. The manufacturer's certificate shall state that the finished geotextile meets MARV requirements of the specification as evaluated under the manufacturer's quality control program and that these values are guaranteed by the geotextile manufacturer.
   b. The information supplied shall be in the form of a factory quality control certificate for each roll and shall include the following:
      1) Lot, batch, or roll numbers and identification.
      2) Length and width of each roll.
      3) Date each roll was manufactured.
      4) Sampling procedures.
      5) Results of quality control tests that are to include those presented in Table 02674-A found in this Section 02674 and description of test methods used. The results of these tests must meet the minimum required physical properties for geotextile specified in Table 02674-B found in this Section 02674.
   c. A person having legal authority to bind the manufacturer shall attest to the certificate.
5. Either mislabeling or misrepresentation of materials shall be reason to reject those geotextile products.

1.5 QUALITY ASSURANCE

A. Perform Work in accordance with these Specifications.

B. The Manufacturer shall sample and test the geotextile material, at minimum frequencies specified in Table 02674-A.

C. Any geotextile sample that does not comply with this Section 02674 shall result in rejection of the roll from which the sample was obtained. The Contractor shall replace any rejected rolls at no additional cost to Owner.

D. If a geotextile sample fails to meet the quality control requirements of this Section 02674, the Contractor shall require that the Geotextile Manufacturer sample and test each roll manufactured in the same lot or batch, or at the same time, as the failing roll. Sampling and testing of rolls shall continue until a pattern of acceptable test results is established.

E. General manufacturing procedures shall be performed in accordance with the manufacturer's internal quality control guide and/or documents.

F. The Manufacturer shall be a well-established firm with more than two years experience in the manufacture of geotextiles.

G. The Installer shall be trained and qualified to install geotextiles.

H. The engineer shall monitor the geotextile rolls upon delivery to the site and report any deviations from project specifications to the contractor.

I. The need for conformance testing shall be determined by the Engineer for rolls delivered to the site.
   1. For this purpose, the Engineer shall take a sample three feet (along roll length) by roll width according to ASTM Practice D4354. The sample shall be properly marked, wrapped and sent to an independent laboratory for conformance testing.
   2. The pass or fail of the conformance test results shall be determined according to ASTM Practice D4759.

1.6 DELIVERY, STORAGE AND HANDLING

A. Geotextile labeling, shipment, and storage shall follow ASTM D 4873.

B. Product labels shall clearly show:
   1. Manufacturer or supplier name.
   2. Product identification.
   3. Lot or batch number.
   4. Roll number.
   5. Roll dimensions (length and width).

C. If any special handling is required, it shall be so marked on the geotextile itself; e.g., "This Side Up" or "This Side Against Soil to be Retained."

D. Each shipping document shall include a notation certifying that the material is in accordance with the manufacturer's certificate.

E. Each geotextile roll shall be wrapped with a material that will protect the geotextile, including the ends of the roll, from damage due to shipment, water, ultraviolet sunlight, mud, dust, puncture, and other damaging deleterious conditions. The protective wrapping shall be maintained during periods of shipment and storage.

F. During storage, geotextile rolls shall be elevated off the ground and adequately covered to protect them from the following: site construction damage, precipitation, extended ultraviolet radiation including sunlight, chemicals that are strong acids or strong bases, flames including welding sparks, temperatures in excess of 160°F (71°C), and any other environmental condition that may damage the property values of the geotextile.

G. Transport and handle geotextile with equipment designed to protect it from damage. Equipment used to unload, stack or transport geotextile shall not damage protective wrap or geonet layers.

H. Upon delivery at the job site, the contractor shall ensure that the geotextile rolls are handled and stored in accordance with the manufacturer's instructions as to prevent damage.

I. The geotextile rolls shall not be stacked more than three rolls high or as otherwise recommended by the Manufacturer.

J. Do not use materials damaged during storage or handling. If the geotextile is not packaged and a roll is damaged during shipment, it shall be rejected.

K. If only the outermost surface of the roll is affected, it may be peeled back, cut, and wasted if approved by the Engineer (i.e., it shall be treated as if it were the protective packaging for the remainder of the roll).

L. The geotextile shall be relatively free of holes or any sign of contamination by foreign matter. The Engineer may reject all or portions of units (or rolls) of the geotextile if in his opinion significant quantities of production flaws are observed.

M. Responsibility
1. Contractor
a. The Contractor shall accept and retain full responsibility for all materials and installation and shall be held responsible for any defects in the completed system.
b. The Contractor shall be liable for all damages to the geotextile materials incurred during and after unloading them at the site.
2. Manufacturer of Geotextiles
a. The Geotextile Manufacturer shall be responsible for the production and delivery of geotextile rolls.
b. The Manufacturer shall submit to the Engineer:
1) Those items listed in Part 1.4 of this Section 02674.
2) Production capacity available and projected delivery dates for this project.
3. Geosynthetic Installer (may be same as Contractor)
a. The Installer shall be responsible for field handling, storing, deploying, seaming or connecting, temporary restraining (against wind), anchoring, and other site aspects of the geotextiles.

N. The Installer shall take any necessary precautions to prevent damage to other portions of the Work during placement of the geotextile.

1.7 ENVIRONMENTAL REQUIREMENTS

A. Conduct operations not to interfere with, interrupt, damage, destroy, or endanger integrity of surface or subsurface structures or utilities, and landscape in immediate or adjacent areas.

1.8 FIELD MEASUREMENTS

A. Verify field measurements prior to fabrication.

PART 2 PRODUCTS

2.1 GEOTEXTILE

A. Nonwoven geotextile shall be that which is specified on the Drawings. Unless otherwise noted on the Drawings, geotextile suppliers shall furnish materials whose Minimum Average Roll Values meet or exceed the criteria specified in Table 02674-B. The Manufacturer shall provide test results for these procedures, as well as a certification that the material properties meet or exceed the specified values.
1. Minimum Average Roll Value (MARV) shall be based on Manufacturer's data and shall be calculated as the mean value of the property of interest plus or minus two standard deviations, as appropriate.

2. Where material properties vary among the machine and cross-machine directions, the MARV shall apply to the direction providing the lowest value (when a minimum is specified) or the highest value (when a maximum value is specified).

B. The geotextiles provided by the supplier shall be stock products.

C. The geotextile shall be:
1. Nonwoven, needlepunched, continuous filament polyester material; or
2. Nonwoven, needlepunched, continuous filament polypropylene material; or
3. Nonwoven, needlepunched, polypropylene staple or continuous fiber material.

D. The geotextile shall be manufactured from first quality virgin polymer.

E. The supplier shall not furnish products specifically manufactured to meet the specifications of this project unless authorized by the Owner and Engineer.

F. In addition to the property values listed in Table 02674-B, the geotextiles shall:
1. Retain its structure during handling, placement, and long-term service.
2. Be capable of withstanding outdoor exposure for a minimum of 30 days with no measurable deterioration.

TABLE 02674-A
GEOTEXTILE REQUIRED PHYSICAL PRE-SHIPPING TESTING

PROPERTY	TEST METHOD	MINIMUM FREQUENCY
Mass Per Unit Area	ASTM D5261	Every 100,000 ft^2
Grab Tensile Strength	ASTM D4632	Every 100,000 ft^2
Grab Tensile Elongation	ASTM D4632	Every 100,000 ft^2
Trapezoid Tear Strength	ASTM D4533	Every 100,000 ft^2
Mullen Burst Strength	ASTM D3786	Every 100,000 ft^2
Puncture Strength	ASTM D4833	Every 100,000 ft^2
Apparent Opening Size (AOS)	ASTM D4751	1 per production lot (filter geotextiles only)
Permeability	ASTM D4491	1 per production lot (filter geotextiles only)
UV Resistance(3)	ASTM D4355	1 per production lot

TABLE 02674-B
GEOTEXTILE REQUIRED PHYSICAL AND HYDRAULIC PROPERTIES

PROPERTIES AND REQUIREMENTS(1,2)	UNITS	SPECIFIED VALUES 6 oz.	SPECIFIED VALUES 8 oz.	SPECIFIED VALUES 10 oz.	SPECIFIED VALUES 12 oz.	TEST METHOD
Type	---	Nonwoven	Nonwoven	Nonwoven	Nonwoven	---
Mass Per Unit Area	oz/yd^2	6.0	8.0	10.0	12.0	ASTM D5261
Grab Tensile Strength	lb	160	200	230	300	ASTM D4632
Grab Tensile Elongation	%	50	50	50	50	ASTM D4632
Trapezoid Tear Strength	lb	65	80	95	115	ASTM D4533
Mullen Burst Strength	lb/in^2	310	380	520	550	ASTM D3786
Puncture Strength	lb	85	110	120	140	ASTM D4833
Apparent Opening Size (AOS)	US Sieve/ mm	70/0.212	80/0.18	100/0.15	100/0.15	ASTM D4751
Permeability	cm/sec	0.25	0.3	0.3	0.3	ASTM D4491
UV Resistance(3)	% strength retained	70	70	70	70	ASTM D4355

Notes:
(1) All values represent minimum average roll values (i.e., any roll in a lot should meet or exceed the values in this table) except for UV resistance, which is a minimum value.
(2) Polymer composition of 95 % polypropylene or polyester by weight
(3) Evaluation to be on 2.0 inch strip tensile specimen after 500 hours of exposure.

2.2 ACCESSORIES

A. Sewing materials: Types recommended by manufacturer for sewing seams in geotextile.

PART 3 EXECUTION

3.1 EXAMINATION

A. Prior to implementing any geotextile work, the Geosynthetic Installer shall carefully inspect the subgrade and verify that all work is complete to the point where the installation of the geotextile may properly commence without adverse impact.

B. If the Contractor has any concerns regarding the installed work, the Engineer and/or Owner shall be notified in writing within 48-hours of his site inspection. Failure to inform the Engineer and/or Owner in writing or installation of the geotextile will be construed as Contractor's acceptance of all prior related work.

C. Any geotextile that does not comply with Table 02674-B of this Section 02674 shall be rejected and replaced with new material in accordance with the Specifications, at no additional cost to Owner.

3.2 PREPARATION

A. Prior to implementing any of the work described in this Section 02674, the Geosynthetic Installer shall become thoroughly familiar with all portions of the work within this Section 02674 or related work, as necessary for successful completion of the Work.

3.3 INSTALLATION

A. The Geosynthetic Installer shall handle all geotextile in such a manner as to ensure they are not damaged in any way.

B. The Geosynthetic Installer shall take any necessary precautions to prevent damage to underlying layers during placement of the geotextile.

C. In the presence of wind, all geotextiles shall be weighted by sandbags or approved equivalent. Such anchors shall be installed during placement and shall remain in place until replaced with cover material.

D. After unwrapping the geotextile from its opaque cover, the geotextile shall not be left exposed for a period in excess of 20 days unless a longer exposure period is approved by the Engineer based on a formal demonstration from the CONTRACTOR that the geotextile is stabilized against U.V. degradation for the proposed period of exposure.

E. The CONTRACTOR shall take care not to entrap stones, excessive dust, or moisture in the geotextile during placement.

F. Nonwoven geotextile shall be continuously sewn at their seams. Geotextiles shall be overlapped a minimum of 6 inches, or as otherwise specified in the Specifications.

3.4 FIELD QUALITY CONTROL

A. The Contractor shall be aware of the activities outlined in the CQA Plan and shall account for these CQA activities in the installation schedule.

B. The need for conformance testing shall be determined by the Engineer.

C. The finished geotextile shall have good appearance qualities. It shall be free from such defects that would affect the specific properties of the geotextile, or its proper functioning.

D. Defects and Repairs:
   1. Any holes or tears in the geotextile shall be repaired with a patch made from the same geotextile. The patch shall be sewn in place with a minimum of 12 inches overlap in all directions.
   2. Care shall be taken to remove any soil or other material, which may have penetrated the torn geotextile.

E. Before initial placement of protective cover, compacted soil cover, or other overlying materials, inspect underlying system seams and repaired areas to ensure tight, continuously seamed installation. Repair damaged system and re-inspect repaired work.

3.5 PROTECTION OF FINISHED WORK

A. The Geosynthetic Installer and Contractor shall use all means necessary to protect all prior work and all materials and completed work of other Sections.

B. In applying fill material, no equipment can drive directly across the geotextile. The specified fill material shall be placed and spread utilizing vehicles with a low ground pressure.

C. The geotextile shall be covered as soon as possible after installation and approval. The geotextile shall not be exposed to precipitation prior to being installed and shall not be exposed to direct sun light for more than 20 days after installation.

D. Placement of Overlying Material:
   1. Placement of the overlying material shall proceed immediately following placement and inspection of the geotextile
   2. The overlying material shall be placed on the geotextile in such a manner that ensures that:
      a. The geotextile and underlying lining materials are not damaged.
      b. Minimal slippage occurs between the geotextile and underlying layers.
      c. Wrinkling of geosynthetics does not occur.

E. In the event of damage, the Geosynthetic Installer shall immediately make all repairs and replacements necessary at the expense of the responsible party, to the approval of the Engineer.

F. Protect installed geotextile according to manufacturer's instructions. Repair or replace areas of damaged by scuffing, punctures, traffic, rough subgrade, or other unacceptable conditions.

G. The contractor shall not use heavy equipment to traffic above the geotextile without approved protection.

END OF SECTION

SECTION 02675
GEOCOMPOSITE DRAINAGE LAYER

PART 1 GENERAL

1.1 SUMMARY

A. Section Includes:
1. Geocomposite used for final cover system. The cover system consists of the following components, from bottom to top: subgrade, geomembrane, geocomposite drainage layer, and protective soil cover.

B. Description of Work: The work provides for the geocomposite replacement and repair for the cover system retrofit including placement, seaming, repairs, and all incidentals necessary to complete the Work as specified on the Drawings, Specifications, and CQA Plan.

C. Related Sections:
1. Section 02620 – Perimeter Drain.
2. Section 02672 –LLDPE Geomembrane.

1.2 UNIT PRICE – MEASUREMENT AND PAYMENT

A. Payments will be made to the Contractor in accordance with the specified method of measurement and the unit or lump sum prices stipulated in the accepted Bid.

B. This method of payment will constitute complete compensation for all work required by the Contract Documents.

1.3 REFERENCES

A. American Society for Testing and Materials (ASTM)
1. ASTM D698 Standard Test Methods for Laboratory Compaction Characteristics of Soil Using Standard Effort (12 400 ft-lbf/ft^3 (600 kN-m/m^3)).
2. ASTM D1238 Standard Test Method for Melt Flow Rates of Thermoplastics by Extrusion Plastometer.
3. ASTM D1505 Standard Test Method for Density of Plastics by the Density-Gradient Technique.
4. ASTM D1603 Standard Test Method for Carbon Black in Olefin Plastics.
5. ASTMD4355 Standard Test Method for Deterioration of Geotextiles by Exposure to Light, Moisture and Heat in a Xenon Arc Type Apparatus.
6. ASTM D4491 Standard Test Method for Water Permeability of Geotextiles.
7. ASTM D4632 Standard Test Method for Grab Breaking Load and Elongation of Geotextiles.
8. ASTM D4716, Standard Test Method for Determining the (In-Plane) Flow Rate Per Unit Width and Hydraulic Transmissivity of a Geosynthetic Using a Constant Head.
9. ASTM D4751, Standard Test Method for Determining Apparent Opening Size of Geotextile, Geomembranes, and Related Products.
10. ASTM D4833, Standard Test Method for Index Puncture Resistance of Geotextiles, Geomembranes, and Related Products.
11. ASTM 5035 Standard Test Method for Breaking Force and Elongation of Textile Strips (Strip Method)
12. ASTM D5199 Standard Test Method for Measuring Nominal Thickness of Geosynthetics.

13. ASTM D5261 Standard Test Method for Measuring Mass per Unit Area of Geotextiles.
14. ASTM D7005 Standard Test Method for Determining the Bond Strength (Ply Adhesion) of Geocomposites.

1.4 SUBMITTALS

A. Manufacturer's Product Information
1. At least five (5) working days prior to shipment, the Geosynthetic Installer shall furnish the Engineer with pre-shipping product data sheets and test data for each geocomposite type. At a minimum, the Manufacturer will perform the tests at the frequencies given in Tables 02670-A and/or 02670-C found in this Section on the geocomposite prior to shipping geocomposite material to the site. These tests shall conform to the standards set in Tables 02670-B and 02670-D, also found in this Section. The information supplied shall be in the form of a factory quality control certificate for each geocomposite roll and shall include the following:
   a. Lot, batch, or roll numbers and identification.
   b. Length and width of each roll.
   c. Date each roll was manufactured.
   d. Sampling procedures.
   e. Results of quality control tests that are to include those presented in Table 02675-A and description of test methods used. The results of these tests must meet the minimum required physical properties for geocomposite specified in Table 02675-B.

B. The factory QA/QC plan for operating the system.

C. Manufacturer's Installation Instructions.

D. A written Certificate from the Geocomposite Manufacturer stating that the resin and/or materials supplied are in compliance with this Specification.

E. Statement certifying that no more than 2% by weight of factory regrind was used to manufacture the geonet core in the composite used for leachate collection applications. Factory regrind shall have resin documentation.

1.5 QUALITY ASSURANCE

A. Perform Work in accordance with these Specifications.
1. Cover System - Interface Friction Angle Requirements and Testing shall be in accordance with requirements of Section 02672 Part 2.1.B.

B. The Manufacturer shall sample and test the geocomposite material, at minimum frequencies specified in Table 02675-A.

C. Conformance Testing:
1. Conformance testing shall be performed by an independent laboratory at a frequency of at least 1 per 100,000 square feet of geocomposite manufactured for this project.
   Conformance testing shall consist of the following tests:
   a. Thickness (ASTM D5199).
   b. Density (ASTM D1505).
   c. Ply Adhesion (ASTM D7005).
   d. Transmissivity (ASTM D4716).
   e. Other tests as required by Engineer.

2. Sampling for conformance testing shall be performed at the manufacturing facility whenever possible, and in accordance with the CQA Plan.

D. The Engineer shall examine the geocomposite rolls upon delivery to the site and report any deviations from project specifications to the Contractor.

F. If a geocomposite sample fails to meet the quality control requirements of this Section, the Contractor and/or Engineer shall require that the Liner Manufacturer sample and test each roll manufactured in the same lot or batch, or at the same time, as the failing roll. Additional sampling and testing shall be completed at no additional cost to the Owner. Sampling and testing of rolls shall continue until a pattern of acceptable test results is established.

G. Any geocomposite sample that does not comply with this Section shall result in rejection of the roll from which the sample was obtained. The Contractor shall replace any rejected rolls at no additional cost to Owner. At the Geocomposite Manufacturer's discretion and expense, additional testing of individual rolls may be performed to more closely identify noncomplying rolls and to qualify individual rolls.

PART 2 PRODUCTS

2.1 GEOCOMPOSITE

A. Materials:

1. Geocomposite shall be a high-flow capacity geocomposite consisting of an HDPE goenet drainage core with nonwoven geotextiles heat bonded to each side.
2. Geocomposite suppliers shall furnish materials whose values meet or exceed the criteria specified in Table 02675-B. The Manufacturer shall provide test results for these procedures, as well as a certification that the material properties meet or exceed the specified values.
3. The synthetic mesh structure shall consist of solid rib extruded high density polyethylene.
4. The geocomposite provided by the Supplier shall be stock products. No more than 2% by weight of factory regrind shall be used to manufacture the geonet core used for leachate collection applications. Factory regrind shall have resin documentation.
5. The Supplier shall not furnish products specifically manufactured to meet the Specifications of this project unless authorized by the Owner and Engineer.
6. In addition to the property values listed in Table 02675-B, the geocomposite shall:
   a. Retain its structure during handling, placement, and long-term service.
   b. Be capable of withstanding outdoor exposure for a minimum of 30 days with no measurable deterioration.
   c. Be chemically inert when immersed in the leachate from a typical sanitary landfill.
7. The geonet core shall be manufactured by extruding:
   a. Two crossing strands to form a bi-planar drainage net structure; or
   b. Three sets of strands to form a tri-planar drainage net structure consisting of a thick vertical rib with diagonally placed top and bottom ribs.

TABLE 02675-A
MANUFACTURING QUALITY CONTROL TEST FREQUENCIES

Property	Test Method	Frequency
Geonet		
Thickness	ASTM D5199	50,000 ft^2
Density (geonet)	ASTM D1505	50,000 ft^2
Carbon Black Content	ASTM D1603	50,000 ft^2
Resin		
Polymer Density	ASTM D1505	Once per lot
Melt Flow Index	ASTM D1238	Once per lot
Geotextile		
Mass per Unit Area	ASTM D5261	100,000 ft^2
Grab Tensile	ASTM D4632	100,000 ft^2
Puncture	ASTM D4833	100,000 ft^2
AOS, US Sieve	ASTM D4751	540,000 ft^2
Water Flow Rate	ASTM D4491	540,000 ft^2
UV Resistance	ASTM D4355	once per resin formulation
Geocomposite		
Compression Strength	ASTM D1621	100,000 ft^2
Ply Adhesion	ASTM D7005	50,000 ft^2
Transmissivity	ASTM D4716	540,000 ft^2

TABLE 02675-B
GEOCOMPOSITE REQUIRED PHYSICAL PROPERTIES

Property	Test Method	Qualifier[1]	Minimum Average Value
Geonet			
Polymer Composition, %			95% polyethylene by weight
Thickness, mil	ASTM D5199	MAV	200
Density, g/cm^3	ASTM D1505	MAV	0.94
Tensile Strength, lb/in	ASTM D5035	MAV	55
Carbon Black Content, %	ASTM D1603	range	2.0 – 3.0
Resin			
Polymer Density, g/cm^3	ASTM D1505	MAV	> 0.94
Melt Flow Index, g/10 min	ASTM D1238	MAX	≤ 1.0
Geotextile			
Mass per Unit Area, oz/yd^2	ASTM D5261	MAV	8
Grab Tensile, lb	ASTM D4632	MAV	200
Puncture Strength, lb	ASTM D4833	MAV	110
AOS, US Sieve (mm)	ASTM D4751	MAV	80 (0.18 mm)
Permeability, cm/s	ASTM D4491	MAV	0.3
Geocomposite			
Transmissivity[2, 3], m^3/m/sec	ASTM D4716	MAV	1.4×10^{-3}
Ply Adhesion, lb/in	ASTM D7005	MAV	1.0

Notes:
1. MAV = Minimum Average Value, MAX = Maximum Value
2. Liner System: Gradient of 0.03, normal load of 7,200 psf, between soil and geomembrane at seat time of 100 hours.
3. Cover System: Gradient 0.33, normal load of 1,000 psf, between soil and geomembrane at seat time of 100 hours.

2.2 ACCESSORIES

A. Geonet Ties: Plastic fasteners recommended by Manufacturer for tying geonet panels together. Metallic ties shall not be used for joining the geonet strips.

PART 3 EXECUTION

3.1 GENERAL

A. The Geosynthetics Installer shall furnish all labor, materials, supervision and equipment to install the geocomposite for the project including, but not limited to, geocomposite layout, seaming, patching, and all necessary and incidental items required to complete the work, in accordance with the Drawings and these Specifications.

3.2 DELIVERY, STORAGE, AND HANDLING

A. Geocomposite shall be shipped:
   1. Rolled and labeled with roll number and manufacturer's batch number.
   2. Manufacturer's quality control documentation shall be included with each roll.

B. If any special handling is required, it shall be labeled on the geocomposite itself; e.g., "This Side Up" or "This Side Against Soil to be Retained."

C. Each shipping document shall include a notation certifying that the material is in accordance with the Manufacturer's Certificate.

D. Each geocomposite roll shall be wrapped with a material that will protect the geocomposite, including the ends of the roll, from damage due to shipment, water, sunlight and contaminants. The protective wrapping shall be maintained during periods of shipment and storage.

E. Transport and handle geocomposite with equipment designed to protect geocomposite from damage. The Contractor shall be responsible for unloading and storage of geocomposite in a manner that prevents damage to the geocomposite.

F. On-site storage shall be as needed to protect the geocomposite rolls from excessive accumulations of soil on the geocomposite surfaces, water, heat, mechanical abrasion, puncture and vehicular traffic.

G. Preserve integrity and readability of geocomposite roll labels.

H. The geocomposite rolls shall not be stacked more than three rolls high, or as otherwise recommended by the Manufacturer.

3.3 DAILY PRE-INSTALLATION MEETINGS

A. At the beginning of each work day the Contractor's Superintendent, the Geosynthetic Installer's Superintendent, and the CQAO will meet to discuss the upcoming work plan for all parties to promote cooperation, communication and understanding. Operations shall be planned and implemented so as not to interfere with, interrupt, damage, destroy, or endanger integrity of surface or subsurface structures or utilities, and landscape in immediate or adjacent areas.

3.4 PREPARATION

A. Ensure acceptance of underlying layers before installing overlying layers.

3.5 INSTALLATION

Installation of the geocomposite shall be in compliance with this Specification and with the Manufacturer's standard guidelines and specifications for geocomposite installation, subject to approval by the Engineer, including, but not limited to: (i) handling and site storage requirements; (ii) unrolling and laying of geocomposite sheets; (iii) field seaming or welding techniques; (iv) anchor trench and ballast details; (v) vent details; and (vi) connections to inlet structures and pipes.

A. Geocomposite Deployment:
   1. The Geosynthetics Installer shall handle all geocomposite in such a manner as to ensure the material is not damaged in any way.
   2. The geocomposite roll should be installed in the direction of the slope and in the intended direction of flow unless otherwise specified by the Engineer.

3. On the cell floors, the geocomposite machine direction shall be installed in the slope direction. The slope direction is the direction perpendicular to the contour lines indicated on the Drawings.
4. On slopes, secure geocomposite and then roll geocomposite down slope in manner to continually keep geocomposite in tension. If necessary, position geocomposite by hand after unrolling to minimize wrinkles.
5. Weight geocomposite with sandbags or equivalent in presence of wind. Do not remove weight until replaced with cover material. Handle sandbags with care to prevent rupture or damage of sandbag.
6. If the project includes an anchor trench at the top of the slopes, the geocomposite shall be properly anchored to resist sliding. Anchor trench compacting equipment shall not come into direct contact with the geocomposite.
7. Do not weld geocomposite to geomembrane unless otherwise specified in construction plans.
8. Cut geocomposite using scissors or other cutting tools as specified by the Manufacturer.
9. Do not damage underlying geosynthetic layers during placement of geocomposite.
10. During geocomposite deployment, do not entrap dirt, excessive dust that could cause clogging of drainage system, or stones that could damage adjacent geomembrane. If dirt or excessive dust is entrapped in geocomposite, hose clean prior to placement of next layer of material.

B. Seam and Overlap: Each component of the geocomposite (i.e., geotextile(s) and geonet) will be secured or seamed to the like component at overlaps.

1. Geonet Components
   a. Overlap adjacent geonet rolls minimum of 4 in.
   b. Geonet roll ends (butt seams) shall be overlapped one foot in areas with less than 10 percent slope.
   c. In areas of greater than 10 percent slope, butt seams shall be overlapped two feet. Two staggered rows of ties shall be applied at 12 inch intervals.
   d. Tie geonet overlaps with plastic fasteners. Use white or yellow tying devices for easy inspection. Do not use metallic devices.
   e. Tie every 5 ft along edges, every 6 in. in anchor trench, and every 12 in. along end-to-end seams.
   f. No horizontal seams shall be allowed on side slopes. If the project contains long, steep slopes, special care should be taken so that only full-length rolls are used at the top of the slope.
   g. In corners of side slopes of rectangular landfills, where overlaps between perpendicular geonet strips are required, unroll an extra layer of geonet along slope, on top of previously installed geonet, from top to bottom of slope.
   h. Stagger joints when more than one layer of geonet is installed.
   i. When several layers of geonet are stacked, deploy rolls in same direction to prevent strands of one layer from penetrating channels of adjacent layer.
2. Geotextile Components
   a. The bottom layer of geotextiles shall be overlapped. The top layer of geotextile shall be continuously sewn. Geotextiles shall be overlapped a minimum of 4 inches prior to seaming.
   b. Polymeric thread, with chemical resistance properties equal to or exceeding those of the geotextile component, shall be used for all sewing. The seams shall be sewn to provide a flat (prayer) seam, “J” seam or “butterfly-folded” seam and shall be a two-thread, double-lock stitch or a double row of single-thread, chain stitch.

3.6 FIELD QUALITY CONTROL

A. The Contractor shall be aware of the activities outlined in the CQA Plan and shall account for these CQA activities in the installation schedule.

B. The finished geocomposite shall have good appearance qualities. It shall be free from such defects that would affect the specific properties of the geocomposite, or its proper functioning.

C. Defects and Repairs:
   1. Repair damage to geocomposite as follows, if hole or tear width across roll is less than 50% of width of roll.
      a. Place patch extending 2 ft beyond edges of hole or tear.
      b. Secure patch to original geocomposite by tying every 6 in. Use approved tying devices specified by Manufacturer.
      c. The top geotextile component of the patch shall be heat sealed to the top geotextile of the geocomposite needing repair.
   2. Repair damage to geocomposite as follows, if hole or tear width across roll is greater than 50% of width of roll.
      a. On base of landfill, cut out damaged area and replace with new geocomposite.
      b. On side slopes, remove and replace damaged geocomposite panel.
      c. Join in the new portions as noted in Part 3.4 E1 above in this Section.

D. CQAO shall observe repairs and report noncompliance in writing to Owner and Engineer.

E. Before initial placement of compacted soil cover or other cover, inspect system seams and repaired areas to ensure tight, continuously bonded installation. Repair damaged system and re-inspect repaired work.

3.7 PROTECTION OF FINISHED WORK

A. Protect installed geocomposite according to geocomposite manufacturer's instructions. Repair or replace areas of geocomposite damaged by scuffing, punctures, traffic, rough subgrade, or other unacceptable conditions.

B. The Geosynthetics Installer and Contractor shall use all means necessary to protect all prior Work and all materials and completed work of other Sections included in these Specifications.

C. In the event of damage, the Geosynthetics Installer and/or Contractor (depending on who damages the geocomposite) shall immediately make all repairs and replacements necessary, to the approval of the Engineer and at no additional cost to Owner.

D. Tools shall not be left on, in, or under the geocomposite.

END OF SECTION

SECTION 02924
SEEDING AND SOIL SUPPLEMENTS

PART 1 GENERAL

1.1 SUMMARY

A. Section includes:
1. Preparation of subsoil.
2. Placing topsoil as needed.
3. Seeding.
4. Hydroseeding.
5. Mulching.
6. Fertilizing.
7. Maintenance.

B. Description of Work:
1. Includes all labor, equipment and materials required to establish a permanent grass cover on all graded surfaces including, but not limited to preparation of subsoil, soil amendments, fertilizing, and seeding.
2. Includes fulfilling requirements of the Maintenance Warranty.
3. Includes any maintenance and protection required to control erosion on embankment fill surfaces prior to beginning permanent grassing operations.

C. Related Sections:
1. Section 02320 – Backfill – Structural.
2. Section 02374 – Erosion Control Devices.
3. Section 02620 – Perimeter Drain.

1.2 UNIT PRICE - MEASUREMENT AND PAYMENT

A. Payments will be made to the Contractor in accordance with the specified method of measurement and the unit or lump sum prices stipulated in the accepted Bid.

B. This method of payment will constitute complete compensation for all work required by the Contract Documents.

1.3 REFERENCES

A. The State of North Carolina Erosion and Sediment Control Planning and Design Manual.

1.4 DEFINITIONS

A. Weeds: Vegetative species other than specified species to be established in given area.

1.5 SUBMITTALS

A. Product Data: Submit data for seed mix, fertilizer, mulch, and other accessories.

B. Soil test results and fertilizer and soil amendment recommendations from the North Carolina Department of Agriculture and Consumer Affairs or a similar soil and nutrient testing laboratory.

1.6 CLOSEOUT SUBMITTALS

A. Seeding maintenance warranty.

1.7 QUALITY ASSURANCE

A. Provide seed mixture in containers showing percentage of seed mix, germination percentage, inert matter percentage, weed percentage, year of production, net weight, date of packaging, and location of packaging.

B. Perform Work in accordance with North Carolina Erosion and Sedimentation Control Planning and Design Manual.

C. Provide soil testing results indicating required fertilizer, lime, and nutrient demand for on-site soils to promote vigorous vegetative growth.

1.8 DELIVERY, STORAGE, AND HANDLING

A. Deliver grass seed mixture in sealed containers. Seed in damaged packaging is not acceptable.

B. Deliver fertilizer in waterproof bags showing weight, chemical analysis, and name of manufacturer.

PART 2 PRODUCTS

2.1 SEED MIXTURE

A. Temporary Seed Mixture: As specified on Drawings.

B. Permanent Seed Mixture: As specified on Drawings.

2.2 SOIL MATERIALS

A. Topsoil: Excavated from site, imported, and/or a blend thereof reasonably free of weeds as specified in Section 02320.

2.3 ACCESSORIES

A. Mulching Material: Oat or wheat straw, free from weeds, foreign matter detrimental to plant life, and dry and as described in the North Carolina Erosion and Sediment Control Planning and Design Manual.

B. Fertilizer: Commercial grade; recommended for grass; of proportion necessary to eliminate deficiencies of topsoil as described in the North Carolina Erosion and Sediment Control Planning and Design Manual and as indicated on Drawings.

C. Lime: Agricultural grade; recommended for grass; of proportion necessary to promote germination of seed as described in the North Carolina Erosion and Sediment Control Planning and Design Manual and as indicted on the Drawings.

D. Water: Clean, fresh and free of substances or matter capable of inhibiting vigorous growth of grass.

E. Erosion Fabric: Erosion control matting, as specified on Drawings.

PART 3 EXECUTION

3.1 EXAMINATION

A. Verify prepared soil base is ready to receive the Work of this Section.

3.2 PREPARATION OF SUBSOIL

A. Prepare sub-soil to eliminate uneven areas and low spots. Maintain lines, levels, profiles and contours. Make changes in grade gradual. Blend slopes into level areas.

B. Remove foreign materials, weeds and undesirable plants and their roots. Remove contaminated sub-soil.

C. Tracked soil surface shall be oriented up and down slopes and not parallel to slopes to help prevent erosion.

3.3 FERTILIZING

A. Provide minimum fertilizer, lime, and nutrient addition as recommend by soil testing results to promote vigorous vegetative growth.

B. Apply fertilizer after smooth raking of topsoil.

C. Mix fertilizer thoroughly into upper 2 to 4 inches of soil.

D. Lightly water soil to aid dissipation of fertilizer. Irrigate top level of soil uniformly.

3.4 SEEDING

A. Stabilization and/or seeding must be completed per the erosion and sediment control permit requirements. This is understood that disturbed areas are to be stabilized or seeded within 15 working days or 90 calendar days.

B. Apply seed at rate as indicated on Drawings evenly in two intersecting directions and in accordance with the North Carolina Erosion and Sediment Control Planning and Design Manual. Rake in lightly.

C. Do not seed areas in excess of that which can be mulched on same day.

D. Planting Season: As indicated on Drawings and in accordance with the North Carolina Erosion and Sediment Control Planning and Design Manual.

E. Do not sow immediately following rain, when ground is too dry, or when winds are over 12 mph.

F. Immediately following seeding, apply mulch to thickness as specified on Drawings and in accordance with the North Carolina Erosion and Sediment Control Planning and Design Manual. Maintain clear of shrubs and trees.

G. Apply water with fine spray immediately after each area has been mulched. Saturate to 2 inches

of soil.

3.5 HYDROSEEDING

A. Apply fertilizer, mulch and seeded slurry with hydraulic seeder at rate of 2000 lbs per acres evenly in one pass.

B. After application, apply water with fine spray immediately after each area has been hydroseeded. Saturate to 4 inches of soil and maintain moisture levels two to four inches.

3.6 SEED PROTECTION

A. Cover seeded slopes where grade is 3 horizontal to 1 vertical or greater with erosion fabric and/or as specified on the Drawings. Roll fabric onto slopes without stretching or pulling.

B. Lay fabric smoothly on surface, bury top end of each section in 6 inch deep excavated topsoil trench. Overlap edges and ends of adjacent rolls minimum 12 inches. Backfill trench and rake smooth, level with adjacent soil.

C. Secure outside edges and overlaps at 36 inch intervals with stakes or as recommended by the Manufacturer.

D. Lightly dress slopes with topsoil to ensure close contact between fabric and soil.

E. At sides of ditches, lay fabric laps in direction of water flow. Lap ends and edges minimum 6 inches.

3.7 MAINTENANCE WARRANTY

A. The contractor is responsible for providing a sufficient quality vegetation consistent with the engineers approved seeding mixture. The contractor shall be liable for maintenance, substantial growth and acceptance for a period of twelve months after Substantial Completion. The Owner shall retain a Maintenance Bond from the contractor in the amount of 15% of the total price of seeding for a period of twelve months after Substantial Completion.

B. Vegetation shall be monitored by the Owner or Owners representative and the contractor during agreed upon dates. A corrective punch list and/or approval letter will then be formulated and given to the contractor for each review. If the vegetation is deemed of insufficient quality and/or erosion has occurred due to fault of the contractor, contractor will take corrective measures and or replace at no cost to the owner. Contractor liability for establishing vegetation does not include destructive acts by others including traffic, mowing, chemicals, all other physical activities and force majeure.

C. Definitions

1. *corrective measures* - may include any or all of the following: re-fertilizing, re-seeding, correcting erosion issues caused by insufficient vegetation.
2. *force majeure* - acts of severe or abnormal conditions including but not limited to parasitic insects or fungi, wildfire, flooding, wind damage, or extreme drought as defined by the North Carolina Drought Management Advisory Council.
3. *owner's obligations* - The Owner is obligated to monitor the vegetation at the frequency defined above. If corrective measures need to be taken, the owner is responsible for communicating to the Contractor the extent and location where corrective measures are necessary.

4. *sufficient quality of permanent vegetation* - Permanent vegetation will be considered of sufficient quality if the following two conditions are met:
   a. No bare spots are larger than 25 square feet
   b. Bare spots make up less than 2% of total seeded area

D. Terms and conditions of the maintenance warranty may be modified by a Notice of Change if agreeable to the Owner, Engineer, and Contractor.

END OF SECTION

SECTION 03480
PRE-CAST CONCRETE STRUCTURES

PART 1 GENERAL

1.1 SUMMARY

A. Section Includes:
   1. Perimeter drain junction boxes.

B. Description of Work: Includes excavating, bedding, concrete sections, cover frames and covers, installation, sealing pipe outlets to depth indicated, backfilling, and concrete pipe collars.

C. Related Sections:
   1. Section 02315 – Excavation.
   2. Section 02320 – Backfill - Structural.

1.2 UNIT PRICE - MEASUREMENT AND PAYMENT

A. Payments will be made to the Contractor in accordance with the specified method of measurement and the unit or lump sum prices stipulated in the accepted Bid.

B. This method of payment will constitute complete compensation for all work required by the Contract Documents.

1.3 REFERENCES

A. American Concrete Institute
   1. ACI 318 - Building Code Requirements for Reinforced Concrete.

B. ASTM International
   1. ASTM C443 - Joints.
   2. ASTM C913 - Standard Specification for Pre-cast Concrete Water and Wastewater Structures.

C. NCDOT Standard Specifications for Roads and Structures

1.4 DESIGN REQUIREMENTS

A. Design Criteria:
   1. Honeycombed or retempered concrete is not permitted.
   2. Equivalent strength: Based on structural design of reinforced concrete as outlined in ACI 318, Design for H20 Loading.
   3. Design of Lifting Devices for Pre-cast Structures: In accordance with ASTM C 913.
   4. Design of Joints for Pre-cast Structures: In accordance with ASTM C443.

1.5 SUBMITTALS

A. Shop Drawing: Indicate structure locations, elevations, piping, sizes and elevations of penetrations.

B. Product Data: Submit covers, component construction, features, configuration, and dimensions.

C. Manufacturer's Certificates: Submit Statement of Compliance, supporting data from Materials Suppliers attesting that pre-cast concrete structures provided meet or exceed ASTM Standards and Specification requirements.

1.6 QUALITY ASSURANCE

A. Perform Work in accordance with North Carolina and Local Municipality standards.

1.7 DELIVERY, STORAGE AND HANDLING

A. Comply with Pre-cast Concrete Manufacturer's instructions for unloading, storing and moving pre-cast structures.

B. Store pre-cast concrete structures to prevent damage to Owner's property or other public or private property. Repair property damaged from materials storage.

C. Mark each pre-cast structure by indentation or waterproof paint showing date of manufacture, Manufacturer, and identifying symbols and numbers shown on Drawings to indicate its intended use.

1.8 ENVIRONMENTAL REQUIREMENTS

A. Conduct operations not to interfere with, interrupt, damage, destroy, or endanger integrity of surface or subsurface structures or utilities, and landscape in immediate or adjacent areas.

PART 2 PRODUCTS

2.1 PRECAST CONCRETE STRUCTURES

A. Configuration shall be as shown on Drawings.

PART 3 EXECUTION

3.1 EXAMINATION

A. Verify connections, sizes, locations and inverts are as indicated on Drawings.

B. Verify items provided by other sections of Work are properly sized and located.

C. Verify excavations for the structures are correct.

3.2 PREPARATION

A. Coordinate placement of connecting pipes required by other Sections of Work as described in these Specifications.

B. Do not install structures where site conditions induce loads exceeding structural capacity of structures.

C. Inspect pre-cast concrete structures immediately prior to placement in excavation to verify structures are internally clean and free from damage. Remove and replace damaged units.

3.3 INSTALLATION

A. Excavation and Backfill:
   1. Excavate for pre-cast concrete structures in accordance with Section 02315 of these Specifications in location and to depth shown. Provide clearance around sidewalls of structure for construction operations.
   2. When groundwater is encountered, prevent accumulation of water in excavations. Place pre-cast concrete structures in dry trench.
   3. Excavate softened bearing materials and replace with compacted fill, lean concrete (2,000 psi), or aggregate as recommended by the Engineer.
   4. Where possibility exists of watertight structure becoming buoyant in flooded excavation, anchor structure to avoid flotation.

B. Lift pre-cast structures at lifting points designated by Manufacturer.

C. When lowering pre-cast concrete structures into excavations and joining pipe to units, take precautions to ensure interior of pipeline and structure remains clean.

D. Set cover frames and covers level without tipping, to correct elevations.

E. Coordinate with other Sections of Work as described in these Specifications to provide correct size, shape, and location.

3.4 FIELD QUALITY CONTROL

A. Request inspection by Engineer prior to placing aggregate cover over piping.

B. Compaction Testing: In accordance with Section 02320.

C. When tests indicate Work does not meet specified requirements, remove Work, replace and retest.

END OF SECTION

Notice of Change

S&ME

NOTICE OF CHANGE

OWNER:	Duke Energy	**Date: 06/21/11**	**Job No.: 1356-07-017-05**
DESCRIPTION:	Down Drain	Cover System Retrofit	
	Retrofit	Pine Hall Road Landfill	
NOTICE OF CHANGE NO.	1	Belews Creek Steam Station	
CHANGE ORDER NOS:		Belews Creek, North Carolina	

Description of design change:

Seepage diaphragms were relocated to the downstream side of drop inlets. The seepage diaphragm piping layout was also modified with fittings to allow the pipes to tap into the newly replaced down drain pipes and provide inspection ports at grade at these locations. Soil-bentonite plugs were also added on the downstream side of seepage diaphragms. Additionally, notes were added for the removal of existing geocomposite in the areas of seepage diaphragm construction. Notes were also added to replace the existing corrugated double wall HDPE down drain pipe with SDR 32.5 solid wall HDPE down drain pipe.

Reason for design change:

To better manage stormwater runoff and infiltration.

Effective date of design change:

Immediately

Financial and schedule considerations: Cost changes as proposed by Email from Fred Brown of Earnhardt Grading on June 8, 2011 and authorized by David Grogg, of Duke Energy by email on June 9, 2011 (attached). Schedule changes are not anticipated.

Attachment:

Revision 2 of Drawing D4

Engineer of Record Kenneth Daly, P.E.	**Date** 6/21/11	**Prepared By** Kyle Baucom, E.I.	**Date** 6/23/11

Copies to:

- ☒ David Grogg, Duke Energy
- ☒ Kim Benson, Duke Energy
- ☐
- ☒ Fred Brown, Earnhardt Grading, Inc.
- ☒ S&ME File No. 1356-07-017-05
- ☐

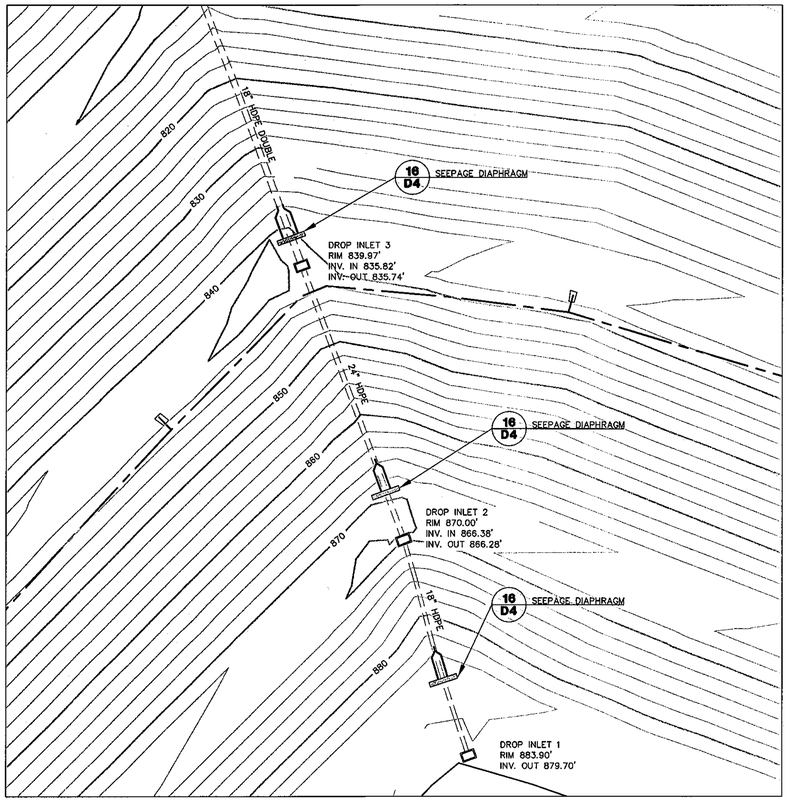

15 D4 DOWN DRAIN RETROFIT
SCALE: 1" = 30'

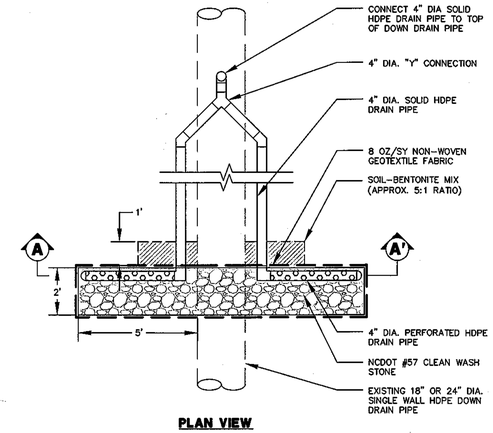

PLAN VIEW

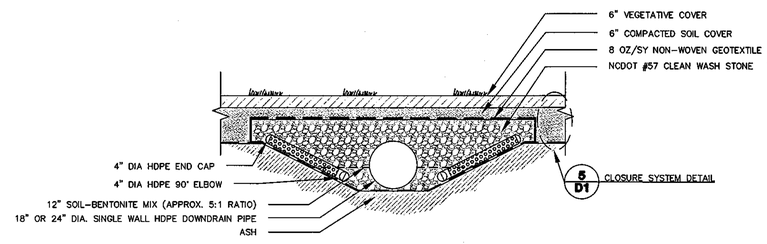

SECTION VIEW A - A'

16 D4 SEEPAGE DIAPHRAGM
SCALE: 1" = 3'

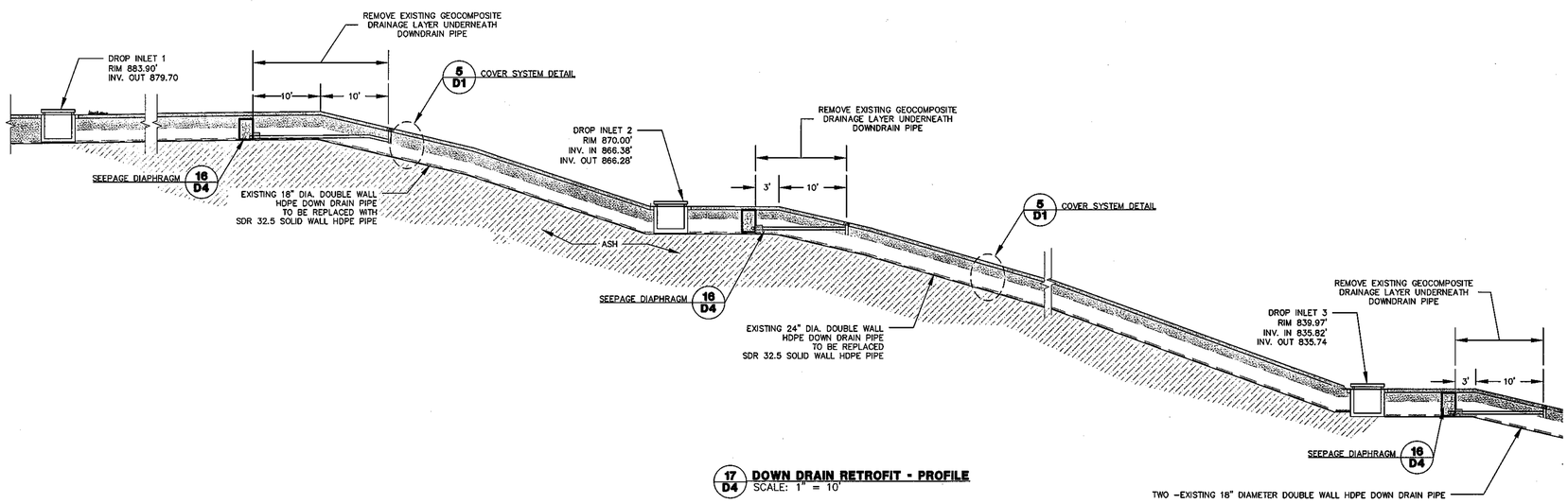

17 D4 DOWN DRAIN RETROFIT - PROFILE
SCALE: 1" = 10'

- ISSUED FOR CONSTRUCTION -

Duke Energy®

S&ME
9751 SOUTHERN PINE BLVD.
CHARLOTTE, N.C. 28273
(704)523-4726
WWW.SMEINC.COM

NORTH CAROLINA PROFESSIONAL SEAL 032153 ENGINEER KENNETH R. DAY

NO.	DATE	DESCRIPTION	BY
2	6-23-11	NCC 1: DOWN DRAIN RETROFIT	KRD
1	6-7-11	SEEPAGE DIAPHRAGM CHANGE	KRD
0	6-6-11	ISSED FOR CONSTRUCTION	KRD

DOWN DRAIN RETROFIT
PINE HALL ROAD ASH LANDFILL

BELEWS CREEK STEAM STATION
BELEWS CREEK, NORTH CAROLINA

ENGINEERING LICENSE NO: F-0176

DRAWN BY: CLD	CHECKED BY: KRD
DESIGNED BY: CHR	APPROVED BY: KRD
PROJECT NUMBER: 1356-07-017	
DUKE ENERGY DRAWING NUMBER: TBD	
SCALE: AS SHOWN	DATE: 6-6-11
DRAWING: D4	OF: 7

DRAWING PATH: G:\356\DUKE ENERGY\07-017 Pleasant Ridge\CAD_ERD\DWG\Construction\VOC 1 - Drawing D4.dwg

Submittals

S&ME

SUBMITTAL COVER SHEET

TO:	Fred L. Brown	**Date: 06/09/11**	**Job No.: 1356-07-017-05**
ADDRESS:	Earnhardt Grading, Inc.	Cover System Retrofit	
	7525 Old Plank Road	Pine Hall Road Landfill	
	Stanley, NC 28164	Duke Energy – Belews Creek Steam Station	
	Email: Fred@earnhardtgrading.com	Belews Creek, North Carolina	

Submittal Log ID No.: 001	Revision No.: 00	Contractor Transmittal No.: EGI-001
Specification Section: 02374, 02500, 02673, 02674	Date of Submittal Report: 06/06/11	
Submittal Subject: Erosion Control Devices, HDPE Pipe, Woven Geotextile, and Nonwoven Geotextile		

Notations:
- ☐ No Exception Taken
- ☐ Corrected as Noted
- ☐ Rejected
- ☐ Revise and Resubmit
- ☐ Submit Specified Items
- ☒ As Noted Herein

Remarks:

The information submitted for the erosion control devices (matting, wattle, and stakes) is generally consistent with the Channel Schedule on Drawing C2 and Detail 13 on Drawing D3.

The information submitted for the ADS single wall HDPE pipe is generally consistent with the corrugated, perforated, HDPE pipe (4-, 6-, and 8-inch diameter) specified in Details 6 and 7 on Drawing D1 for the cap drain and perimeter drain as well as Detail 14 on Drawing D3 for the perimeter drain outlet. Please note that information submitted for pipe perforations is only applicable to 6-inch diameter perimeter drain pipe. It is not applicable to 4-, 6-, and 8-inch diameter pipe used for cap drains and perimeter drain outlets. Please provide submittal information for connection to concrete junction boxes as shown in Detail 8 on Drawing D1.

The properties reported in the GTF 300 woven geotextile product data sheet meet or exceed the properties of the Mirafi 600X specified in Detail 9 on Drawing D1. The properties reported in the 180EX and 245EX nonwoven geotextile product data sheet meet or exceed the properties specified in Table 02674-D. Please note that 180EX nonwoven geotextile will be used at rip rap apron locations (Detail 12 on Drawing D3) and 245EX nonwoven geotextile will be used at perimeter drain locations (Detail 7 on Drawing D1). As specified in Section 02673, Part 1.4.A.2 and Section 02674, Part 1.4.A.2-4, please provide Manufacturer's Quality Control test results as they are available.

Attachments:
EGI Transmittal No. 001
Mirafi 600X Product Data Sheet
Table 02674-B from IFC Specifications

Review of this submittal does not relieve the Contractor from their responsibility for deviations from the Contract Documents nor from their responsibility for errors or omissions in the submittal. Contractor is, and Engineer is not, responsible for matters relating to fabrication, shipping, handling, storage, assembly, installation, construction (including safety), and coordination for performing the Work.

6/10/11 **Engineer of Record** **Date** Kenneth Daly, P.E.	6/10/11 **Prepared by** **Date** Kyle Baucom, E.I.

Copies to:	☒ David Grogg, Duke Energy	☒ S&ME File No. 1356-07-017-05
	☒ Kim Benson, Duke Energy	☐
	☐	☐

Earnhardt Grading, Inc
7525 Old Plank Rd
Stanley, North Carolina 28164

Phone: 704-601-4290
Fax: 704-601-4295

Project: Belews Creek Cap Repair

Submittal: BC Cap 001

To: S&ME, Inc.
9751 Southern Pines Blvd
Charlotte, North Carolina 28273
Attn: Ken Daly

ENCLOSED

- [ ] Drawings
- [ ] Specifications
- [ ] Samples
- [x] Submittal Data
- [ ] Letter
- [ ] Photographs
- [ ] Brochure

SEPARATE COVER [ ]

Note: ___ Copies for job use in final approved form

___ Sample of material required to be submitted

SUBMITTED FOR:

- [x] Approval
- [ ] Comment
- [ ] Your Use
- [ ] Color Selection
- [ ] _____
- [ ] _____
- [ ] _____

RETURNED:

- [ ] Approved
- [ ] Approved as Noted
- [ ] Corrected
- [ ] Resubmit for Approval Corrected
- [ ] Construction May Proceed Resubmit Corrected
- [ ] Disapproved

ITEMS IDENTIFIED AS FOLLOWS

Drawing	Qty	Date	Descritption
	1	6/6/2011	North American Green DS-75
	1	6/6/2011	North American Green C-350
	1	6/6/2011	12" Straw Waddle
	1	6/6/2011	18" Eco Stake
	1	6/6/2011	24" Eco Stake
	1	6/6/2011	ADS Single Wall Pipe
	1	6/6/2011	ADS Single Wall Pipe Preforated
	1	6/6/2011	8 Oz Non Woven Geo-textile
	1	6/6/2011	10 Oz Non Woven Geotextile
	1	6/6/2011	Woven Geotextile

Remarks: _____

Earnhardt Grading, Inc

By _____
Fred L Brown

Material and Performance Specification Sheet

North American Green
14649 Highway 41 North
Evansville, IN 47725
800-772-2040
FAX: 812-867-0247
www.nagreen.com

A tensar. Company

DS75 Erosion Control Blanket

The ultra short-term single net erosion control blanket shall be a machine-produced mat of 100% agricultural straw with a functional longevity of up to 45 days. (NOTE: functional longevity may vary depending upon climatic conditions, soil, geographical location, and elevation). The blanket shall be of consistent thickness with the straw evenly distributed over the entire area of the mat. The blanket shall be covered on the top side with a polypropylene netting having an approximate 0.50 x 0.50 (1.27 x 1.27 cm) mesh with photodegradable accelerators to provide breakdown of the netting within approximately 45 days, depending upon geographical location and elevation. The blanket shall be sewn together on 1.50 inch (3.81 cm) centers with degradable thread.

The DS75 shall meet requirements established by the Erosion Control Technology Council (ECTC) Specification and the US Department of Transportation, Federal Highway Administration's (FHWA) *Standard Specifications for Construction of Roads and Bridges on Federal Highway Projects, FP-03 Section 713.17 as a Type 1.C Ultra Short-term Single Net Erosion Control Blanket.*

The blanket shall be manufactured with a colored thread stitched along both outer edges (approximately 2-5 inches [5-12.5 cm] from the edge) as an overlap guide for adjacent mats.

Material Content		
Matrix	100% Straw Fiber	0.5 lbs/yd² (0.27 kg/m²)
Nettings	Top side only, lightweight photodegradable with photo accelerators	1.5 lb/1000 ft² (0.73 kg/100 m²) approx. weight
Thread	degradable	

DS75 is available in the following standard roll sizes:

Width	4.0 ft (1.2 m)	6.67 ft (2.03 m)	16 ft (4.87 m)
Length	135 ft (41.14 m)	108 ft (32.92 m)	108 ft (32.92 m)
Weight ± 10%	30 lbs (13.6 kg)	40 lbs (18.14 kg)	96 lbs (43.54 kg)
Area	60 yd² (50.16 m²)	80.0 yd² (66.9 m²)	192 yd² (165.5 m²)

Index Value Properties:

Property	Test Method	Typical
Thickness	ASTM D6525	0.39 in (9.9 mm)
Resiliency	ECTC Guidelines	78.8%
Water Absorbency	ASTM D1117	435%
Mass/Unit Area	ASTM 6475	10.54 oz/yd² (351.6 g/m²)
Swell	ECTC Guidelines	15%
Smolder Resistance	ECTC Guidelines	Yes
Stiffness	ASTM D1388	6.31 oz-in
Light Penetration	ECTC Guidelines	9.4%
Tensile Strength –MD	ASTM D6818	102 lbs/ft (1.51 kN/m)
Elongation – MD	ASTM D6818	20%
Tensile Strength – TD	ASTM D6818	68.4 lbs/ft (1.01 kN/m)
Elongation – TD	ASTM D6818	23.6%

Performance Design Values:

Maximum Permissible Shear Stress	
Unvegetated Shear Stress	1.55 lbs/ft² (74 Pa)
Unvegetated Velocity	5.00 ft/s (1.52 m/s)

Slope Design Data: C Factors			
	Slope Gradients (S)		
Slope Length (L)	≤ 3:1	3:1 – 2:1	≥ 2:1
≤ 20 ft (6 m)	0.029	NA	NA
20-50 ft	0.11	NA	NA
≥ 50 ft (15.2 m)	0.19	NA	NA

Bench Scale Testing* (NTPEP):

Test Method	Parameters	Results
ECTC Method 2 Rainfall	50 mm (2 in)/hr for 30 min	SLR** = 9.72
	100mm (4 in)/hr for 30 min	SLR** = 8.80
	150 mm (6 in)/hr for 30 min	SLR** = 8.31
ECTC Method 3 Shear Resistance	**Shear at 0.50 inch soil loss**	**1.95 lbs/ft²**
ECTC Method 4 Germination	Top Soil, Fescue, 21 day incubation	177% improvement of biomass

* Bench Scale tests should not be used for design purposes
** Soil Loss Ratio = Soil loss with Bare Soil/Soil Loss with RECP (soil loss is based on regression analysis)

Roughness Coefficients- Unveg.	
Flow Depth	Manning's n
≤ 0.50 ft (0.15 m)	0.055
0.50 – 2.0 ft	0.055 – 0.021
≥ 2.0 ft (0.60 m)	0.021

Updated 3/09

Product Participant of: QDOR Performance Verified

KB

NORTH AMERICAN GREEN®

North American Green
14649 Highway 41 North
Evansville, IN 47725
800-772-2040
FAX: 812-867-0247
www.nagreen.com

Material and Performance Specification Sheet

A tensar. Company

✓C350 Turf Reinforcement Mat

The composite turf reinforcement mat (C-TRM) shall be a machine-produced mat of 100% coconut fiber matrix incorporated into a permanent three-dimensional turf reinforcement matting. The matrix shall be evenly distributed across the entire width of the matting and stitch bonded between a super heavy duty UV stabilized nettings with 0.50 x 0.50 inch (1.27 x 1.27 cm) openings, an ultra heavy UV stabilized, dramatically corrugated (crimped) intermediate netting with 0.5 x 0.5 inch (1.27 x 1.27 cm) openings, and covered by an super heavy duty UV stabilized nettings with 0.50 x 0.50 inch (1.27 x 1.27 cm) openings. The middle corrugated netting shall form prominent closely spaced ridges across the entire width of the mat. The three nettings shall be stitched together on 1.50 inch (3.81cm) centers with UV stabilized polypropylene thread to form a permanent three-dimensional turf reinforcement matting.

The C350 shall meet requirements established by the Erosion Control Technology Council (ECTC) Specification and the US Department of Transportation, Federal Highway Administration's (FHWA) *Standard Specifications for Construction of Roads and Bridges on Federal Highway Projects, FP-03 Section 713.18 as a Type 5A, B, and C Permanent Turf Reinforcement Mat.*

Installation staple patterns shall be clearly marked on the turf reinforcement matting with environmentally safe paint. All mats shall be manufactured with a colored thread stitched along both outer edges (approximately 2-5 inches [5-12.5 cm] from the edge) as an overlap guide for adjacent mats.

Material Content		
Matrix	100% Coconut fibers	0.50 lbs/yd² (0.27 kg/m²)
Nettings	Top and Bottom, UV stabilized Polypropylene	8 lb/1000 ft² (3.91 kg/100 m²)
	Middle, corrugated UV stabilized Polypropylene	24 lb/1000 ft² (11.7 kg/100 m²)
Thread	Polypropylene, UV stabilized	

C350 is available in the following roll sizes:

Width	6.5 ft (2.0 m)
Length	55.5 ft (16.9 m)
Weight ± 10%	37 lbs (16.8 kg)
Area	40.0 yd² (33.4 m²)

Index Value Properties:

Property	Test Method	Typical	Net Only
Thickness	ASTM D6525	0.67 in (17.0 mm)	0.51 in
Resiliency	ASTM 6524	90%	---
Density	ASTM D792	0.53 oz/in³	---
Mass/Unit Area	ASTM 6566	12.57 oz/yd² (426 g/m²)	---
Porosity	ECTC Guidelines	99%	---
Stiffness	ASTM D1388	3.83 oz-in	---
Light Penetration	ECTC Guidelines	9.0%	---
UV Stability	ASTM D4355/ 1000 hr	86%	86%
Tensile Strength MD	ASTM D6818	625 lbs/ft (9.12 kN/m)	698 lbs/ft
Elongation MD	ASTM D6818	22%	30%
Tensile Strength TD	ASTM D6818	768 lbs/ft (11.21 kN/m)	710 lbs/ft
Elongation TD	ASTM D6818	15%	20%

Bench Scale Testing* (NTPEP):

Test Method	Parameters	Results
ECTC Method 2 Rainfall	50 mm (2 in)/hr for 30 min	SLR** = 18.32
	100mm (4 in)/hr for 30 min	SLR** = 19.65
	150 mm (6 in)/hr for 30 min	SLR** = 20.48
ECTC Method 3 Shear Resistance	**Shear at 0.50 inch soil loss**	**7.5 lbs/ft²**
ECTC Method 4 Germination	Top Soil, Fescue, 21 day incubation	243% improvement of biomass

* Bench Scale tests should not be used for design purposes

** Soil Loss Ratio = Soil loss with Bare Soil/Soil Loss with RECP (soil loss is based on regression analysis)

Updated 3/09

Performance Design Values:

Maximum Permissible Shear Stress		
	Short Duration	Long Duration
Phase 1 Unvegetated	3.2 lbs/ft² (153 Pa)	3.0 lbs/ft² (144 Pa)
Phase 2 Partially Veg.	10.0 lbs/ft² (480 Pa)	10.0 lbs/ft² (480 Pa)
Phase 3 Fully Veg.	12.0 lbs/ft² (576 Pa)	10.0 lbs/ft² (480 Pa)
Velocity Unveg	10.5 ft/s (3.2 m/s)	
Velocity Veg.	20 ft/s (6.0 m/s)	

Slope Design Data: C Factors			
	Slope Gradients (S)		
Slope Length (L)	≤ 3:1	3:1 – 2:1	≥ 2:1
≤ 20 ft (6 m)	0.0005	0.015	0.043
20-50 ft	0.018	0.031	0.050
≥ 50 ft (15.2 m)	0.035	0.047	0.057

Roughness Coefficients- Unveg.	
Flow Depth	Manning's n
≤ 0.50 ft (0.15 m)	0.041
0.50 – 2.0 ft	0.040 – 0.013
≥ 2.0 ft (0.60 m)	0.012

Product Participant of: QDOR PERFORMANCE VERIFIED

KB

Straw Wattle

WS-12

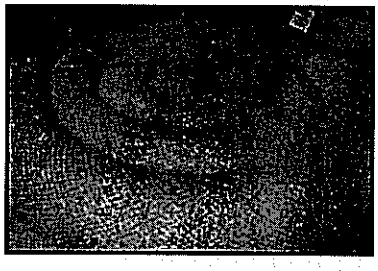

The Straw wattle shall be composed of 100% agricultural straw and be wrapped in tubular UV stabilized synthetic netting.

The netting weight shall be approximately 0.35 ounces/linear ft and shall be made from HDPE (High Density Polyethylene) oriented net with carbon black for UV inhibition. The netting shall have a diamond shaped aperture measuring 0.50 by 0.50 inches.

The wattle ends will be secured with wire closures. Straw wattles shall be installed according to manufacturer's recommendations. They shall be installed on contour and staked with 18 or 24 inch wood stakes at four foot on center.

The Straw Wattle shall be manufactured by North American Green, or equivalent. The Straw Wattle shall have the following properties:

Material Content

Matrix	100% Straw Fiber 12 in Diameter: 3.75 lbs/linear ft. (5.61 kg/m)
Netting	Tubular, diamond-shaped netting (0.35 ounces/linear ft [30.0 g/linear meter] approximate weight)
Wire Closure	4 in, 18 gauge industry grade wire

Straw Wattles are Available with the following Physical Specifications [English Units (Metric Units)]

Diameter	12.00 in (30.48 cm)
Length	10.00 ft (3.05 m)
Weight ± 10%	37.5 lbs (17.10 kg)

14649 Hwy 41 North • Evansville, IN 47725 • 800-772-2040 • 812-867-6632 • Fax: 812-867-0247
www.nagreen.com • www.vmax3.com

Effective 7/1/2008

KB

NORTH AMERICAN GREEN

NORTH AMERICAN GREEN
Eco-STAKE™ (18 inch)
Specification

The North American Green Eco-STAKE is a 100 % biodegradable straight hardwood stake tapered to a point at one end, designed to safely and effectively secure SedimentSTOP biodegradable filtration system. The wood stake must exhibit ample rigidity to enable being driven into hard ground, with sufficient flexibility to resist breakage. The wood stake shall be the North American Green Eco-STAKE or approved equal, with the following dimensions:

Leg Thickness:	0.75 x 0.75 in square (1.90 x 1.90 cm)
Total Length:	18.00 in (45.72 cm)

OK

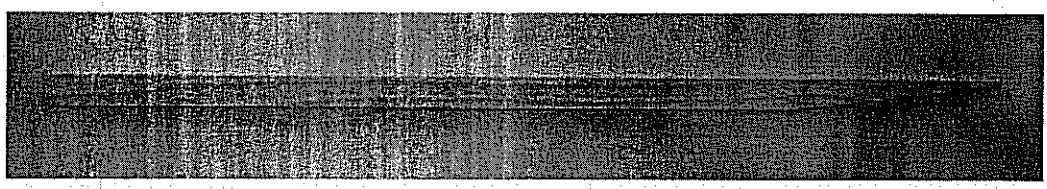

Updated 1/1/2002

KB

NORTH AMERICAN GREEN

NORTH AMERICAN GREEN
Eco-STAKE™ (24 inch)
Specification

The North American Green Eco-STAKE is a 100 % biodegradable straight hardwood stake tapered to a point at one end, designed to safely and effectively secure SedimentSTOP biodegradable filtration system. The wood stake must exhibit ample rigidity to enable being driven into hard ground, with sufficient flexibility to resist breakage. The wood stake shall be the North American Green Eco-STAKE or approved equal, with the following dimensions:

Leg Thickness:	0.75 x 0.75 in square (1.90 x 1.90 cm)
Total Length:	24.00 in (60.96 cm)

OK

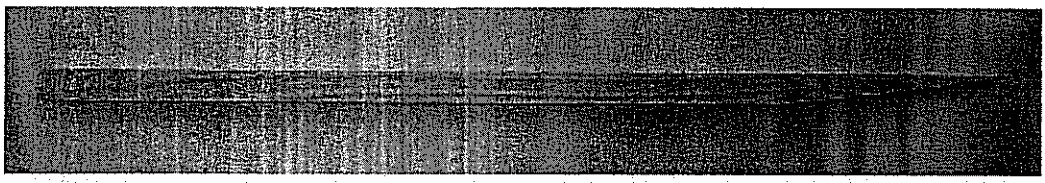

Updated 1/1/2002

KB

ADS SINGLE WALL HIGHWAY PIPE SPECIFICATION

Scope
This specification describes 3- through 24-inch (75 to 600 mm) single wall high density corrugated polyethylene highway pipe, for drainage applications.

Pipe Requirements
ADS single wall corrugated highway pipe shall have annular interior and exterior corrugations.

- 3- through 10-inch (75 to 250 mm) shall meet AASHTO M252, Type C.
- 12- through 24-inch (300 to 600 mm) shall meet AASHTO M294, Type C.

Joint Performance
Joints for 3- to 24- inch (75 – 600 mm) shall be made with split or snap couplings. Standard connection shall meet the soil-tightness requirements of AASHTO M252 or M294. Gasketed connections shall incorporate a closed-cell synthetic expanded rubber gasket meeting the requirements of ASTM D1056 Grade 2A2. Gaskets, when applicable, shall be installed by the pipe manufacturer.

Fittings
Fittings shall conform to AASHTO M252 or AASHTO M294.

Material Properties
Pipe and fittings shall be made of virgin polyethylene compounds that comply with the cell classification 424420C for 4- through 10-inch (100 to 250mm) diameters, or 435400C for 12- through 24-inch (300 to 600mm) diameters, as defined and described in ASTM D3350, except that carbon black content should not exceed 4%. The 12- through 24-inch (300 to 600mm) virgin pipe material shall comply with the notched constant ligament-stress (NCLS) test as specified in Sections 9.5 of AASHTO M294.

Installation
Installation shall be in accordance with ASTM D2321 and ADS's published installation guidelines with the exception that minimum cover in trafficked areas shall be one foot (0.3 m). Contact your local ADS representative or visit our website at www.ads-pipe.com for a copy of the latest installation guidelines.

Pipe Dimensions

	Nominal Diameter, in (mm)									
Pipe I.D. in (mm)	3 (75)	4 (100)	5 (125)	6 (150)	8 (200)	10 (250)	12 (300)	15 (375)	18 (450)	24 (600)
Pipe O.D.* in (mm)	3.6 (91)	4.6 (117)	5.8 (147)	7 (178)	9.5 (241)	12 (305)	14.5 (368)	18 (457)	22 (559)	28 (711)
Perforations	All diameters available with or without perforations.									

*Pipe O.D. values are provided for reference purposes only, values stated for 3- through 24-inch are ± 0.5 inch. Contact a sales representative for exact values.

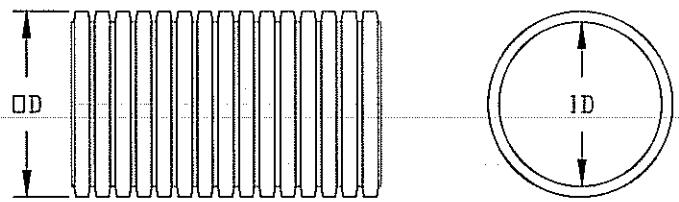

4-inch : cap drain

6-inch : perimeter drain & perimeter drain outlet

8-inch : perimeter drain outlet

© ADS, Inc., July 2008

KB

TECHNICAL NOTE

Single Wall HDPE Perforation Patterns

TN 1.02
October 2008

Nominal I.D.		Perforation Type	Maximum Slot Length or Diameter		Maximum Slot Width		Minimum Inlet Area		Pattern Type
in	mm		in	mm	in	mm	in^2/ft	cm^2/m	
3	75	Slot	0.875	22	0.120	3	1.0	21	A
4	100	Slot	0.875	22	0.120	3	1.0	21	B
5	125	Slot	0.875	22	0.120	3	1.0	21	B
6	150	Slot	0.875	22	0.120	3	1.0	21	B
8	200	Slot	1.18	30	0.120	3	1.0	21	B
10	250	Slot	1.18	30	0.120	3	1.0	21	B
12	300	Slot	1.50	38	0.118	3	1.5	32	B
12	300	Circular	0.313	8	-	-	1.5	32	C
15	375	Circular	0.313	8	-	-	1.5	32	C
18	450	Circular	0.313	8	-	-	1.5	32	C
24	600	Circular	0.313	8	-	-	2.0	42	D

perforations on perimeter drain pipe only

TYPE A PATTERN

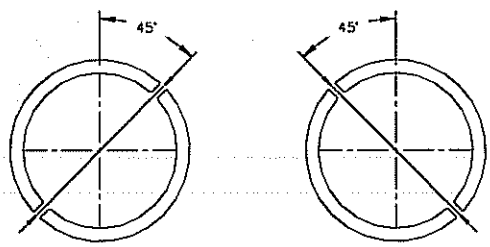

2 SLOT PATTERN
PERFORATIONS
ROTATED 90° EVERY
OTHER VALLEY

TYPE B PATTERN

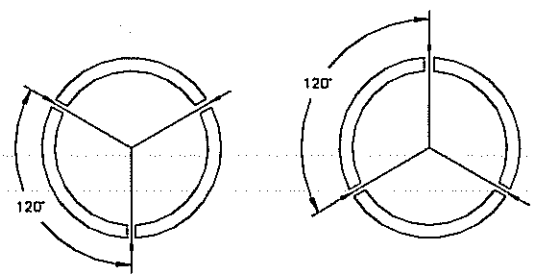

3 SLOT PATTERN
PERFORATIONS
ROTATED 60° EVERY
OTHER VALLEY

TYPE C PATTERN

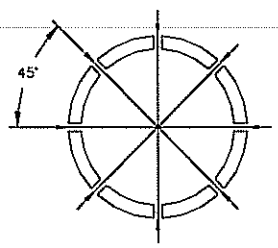

8 HOLE PATTERN

TYPE D PATTERN

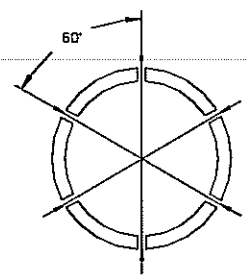

6 HOLE PATTERN

© ADS 2008

KB

Thrace-LINQ™
MEMBER THRACE GROUP

Product Data Sheet
GTF 300

A woven geotextile fabric, produced from high-tenacity polypropylene slit-film. This high-modulus fabric is ideally suited for separation / stabilization applications. GTF 300 has been UV stabilized and packaged in conformance with ASTM D4873.

PROPERTY	*TEST PROCEDURE*	*METRIC*		*ENGLISH*		Mirafi 600X
		MARV		**MARV**		
Grab Tensile Strength(W/F)	ASTM D-4632	1401	N	✓315	lbs	315
Grab Elongation	ASTM D-4632	15	%	✓ 15	%	12
Trapezoid Tear	ASTM D-4533	512	N	✓115	lbs	113
CBR Puncture	ASTM D-6241	4450	N	✓1000	lbs	900
UV Resistance (500 hrs)	ASTM D-4355	80	%	✓ 80	%	70
Permittivity	ASTM D-4491	0.050	sec^{-1}	✓0.050	sec^{-1}	0.05
Water Flow Rate	ASTM D-4491	163	lpm/m^2	✓ 4	gpm/ft^2	4
A.O.S.	ASTM D-4751	0.300	mm	✓ 50	U.S. Sieve	40

Notes:
- ✓**Mullen Burst ASTM D3786 removed. Not recognized by ASTM D35 on Geosynthetics.**
- ✓**Puncture ASTM D4833 is not recognized by AASHTO M288 and has been replaced with CBR Puncture ASTM D6241.**

PROPERTY	*TEST PROCEDURE*	*METRIC*		*ENGLISH*		
		Typical		**Typical**		
Weight	ASTM D-5261	231	g/m^2	✓ 6.8	oz/yd^2	6.0
Thickness	ASTM D-5199	0.711	mm	✓ 28	mils	25

PACKAGING	*METRIC*			*ENGLISH*		
	AREA	**WIDTH**	**LENGTH**	**AREA**	**WIDTH**	**LENGTH**
Roll sizes	501 m^2	3.81 m	131.6 m	600 yd^2	12.5'	432'
	501 m^2	4.57 m	109.7 m	600 yd^2	15'	360'
	501 m^2	5.33 m	94.1 m	600 yd^2	17.5'	309'

Physical properties reflect industry standards. Roll Data may reflect higher values than those listed above.

This information relates to the specific material designated and may not be valid for such material used in combination with any other materials or in any process. Such information is, to the best of our knowledge and belief, accurate and reliable as of the date compiled. However, no representation, warranty or guarantee is made as to its accuracy, reliability or completeness. It is the user's responsibility to satisfy himself or herself as to the suitability and completeness of such information for his or her own particular use. We do not accept liability for any loss or damage that may occur from the use of this information, nor do we offer any warranty against infringement.

LINQ and the Thrace-LINQ emblem are registered trademarks of Thrace-LINQ, Inc.

Thrace-LINQ, Inc 2550 West Fifth North St. Summerville, SC 29483 12/13/2010
1-800-445-4675

KB

Thrace-LINQ™

MEMBER THRACE GROUP

Product Data Sheet

180EX → riprap apron

A non-woven geotextile fabric supplied by Thrace-LINQ, Inc., is manufactured from Polypropylene staple fiber. The fibers are randomly oriented and form a cohesive / stabilized needle punched fabric for use in many applications, such as stabilization, filtration, permanent erosion control, etc. This fabric has been UV stabilized and is resistant to commonly encountered chemicals, mildew and insects found in soil.

PROPERTY	*TEST PROCEDURE*	*METRIC*		*ENGLISH*	
		MARV		**MARV**	
Grab Tensile Strength	ASTM D-4632	912	N	✓ 205	lbs
Grab Elongation	ASTM D-4632	50	%	✓ 50	%
Trapezoid Tear	ASTM D-4533	356	N	✓ 80	lbs
CBR Puncture	ASTM D-6241	2380	N	535	lbs
UV Stability (500 hrs)	ASTM D-4355	70	%	✓ 70	%
Permittivity	ASTM D-4491	1.5	sec^{-1}	1.5	sec^{-1}
Water Flow Rate	ASTM D-4491	4482	lpm/m^2	110	gpm/ft^2
A.O.S.	ASTM D-4751	0.150	mm	✓ 100	U.S. Sieve

Notes:
- **✓Mullen Burst ASTM D3786 removed. Not recognized by ASTM D35 on Geosynthetics.**
- **✓Puncture ASTM D4833 is not recognized by AASHTO M288 and has been replaced with CBR Puncture ASTM D6241.**

PROPERTY	*TEST PROCEDURE*	*METRIC*		*ENGLISH*	
		Typical		**Typical**	
Weight	ASTM D-5261	271	g/m^2	✓ 8.0	oz/yd^2
Thickness	ASTM D-5199	2.286	mm	90	mils

PACKAGING	*METRIC*			*ENGLISH*		
	AREA	**WIDTH**	**LENGTH**	**AREA**	**WIDTH**	**LENGTH**
Roll sizes	418 m^2	3.81 m	109.7 m	500 yd^2	12.5'	360'
	418 m^2	4.57 m	91.4 m	500 yd^2	15'	300'

Physical properties reflect industry standards. Roll Data may reflect higher values than those listed above.

This information relates to the specific material designated and may not be valid for such material used in combination with any other materials or in any process. Such information is, to the best of our knowledge and belief, accurate and reliable as of the date compiled. However, no representation, warranty or guarantee is made as to its accuracy, reliability or completeness. It is the user's responsibility to satisfy himself or herself as to the suitability and completeness of such information for his or her own particular use. We do not accept liability for any loss or damage that may occur from the use of this information, nor do we offer any warranty against infringement.

LINQ and the Thrace-LINQ emblem are registered trademarks of Thrace-LINQ, Inc.

Thrace-LINQ, Inc 2550 West Fifth North St. Summerville, SC 29483 12/13/2010
1-800-445-4675

KB

Thrace-LINQ™

MEMBER THRACE GROUP

Product Data Sheet

245EX → perimeter drain

A non-woven geotextile fabric supplied by Thrace-LINQ, Inc., is manufactured from Polypropylene staple fiber. The fibers are randomly oriented and form a cohesive / stabilized needle punched fabric for use in many applications, such as stabilization, filtration, permanent erosion control, etc. This fabric has been UV stabilized and is resistant to commonly encountered chemicals, mildew and insects found in soil.

PROPERTY	*TEST PROCEDURE*	*METRIC*		*ENGLISH*	
		MARV		**MARV**	
Grab Tensile Strength	ASTM D-4632	1112	N	✓ 250	lbs
Grab Elongation	ASTM D-4632	50	%	✓ 50	%
Trapezoid Tear	ASTM D-4533	445	N	✓ 100	lbs
CBR Puncture	ASTM D-6241	3115	N	700	lbs
UV Stability (500 hrs)	ASTM D-4355	70	%	✓ 70	%
Permittivity	ASTM D-4491	1.2	sec^{-1}	1.2	sec^{-1}
Water Flow Rate	ASTM D-4491	3463	lpm/m^2	85	gpm/ft^2
A.O.S.	ASTM D-4751	0.150	mm	✓ 100	U.S. Sieve

Notes:
- **Mullen Burst ASTM D3786 removed. Not recognized by ASTM D35 on Geosynthetics.**
- **Puncture ASTM D4833 is not recognized by AASHTO M288 and has been replaced with CBR Puncture ASTM D6241.**

PROPERTY	*TEST PROCEDURE*	*METRIC*		*ENGLISH*	
		Typical		**Typical**	
Weight	ASTM D-5261	339	g/m^2	✓ 10	oz/yd^2
Thickness	ASTM D-5199	2.54	mm	100	mils

PACKAGING	*METRIC*			*ENGLISH*		
	AREA	**WIDTH**	**LENGTH**	**AREA**	**WIDTH**	**LENGTH**
Roll sizes	418 m^2	3.81 m	109.7 m	500 yd^2	12.5'	360'
	418 m^2	4.57 m	91.4 m	500 yd^2	15'	300'

Physical properties reflect industry standards. Roll Data may reflect higher values than those listed above.

This information relates to the specific material designated and may not be valid for such material used in combination with any other materials or in any process. Such information is, to the best of our knowledge and belief, accurate and reliable as of the date compiled. However, no representation, warranty or guarantee is made as to its accuracy, reliability or completeness. It is the user's responsibility to satisfy himself or herself as to the suitability and completeness of such information for his or her own particular use. We do not accept liability for any loss or damage that may occur from the use of this information, nor do we offer any warranty against infringement.

LINQ and the Thrace-LINQ emblem are registered trademarks of Thrace-LINQ, Inc.

Thrace-LINQ, Inc 2550 West Fifth North St. Summerville, SC 29483 1-800-445-4675

12/13/2010

KB

TENCATE

Mirafi®

Separation

Mirafi® 600X geotextile is composed of high-tenacity polypropylene yarns, which are woven into a stable network such that the yarns retain their relative position. Mirafi® 600X geotextile is inert to biological degradation and resistant to naturally encountered chemicals, alkalis, and acids.

Mechanical Properties	Test Method	Unit	Minimum Average Roll Value	
			MD	CD
Grab Tensile Strength	ASTM D4632	N (lbs)	1402 (315)	1402 (315)
Grab Tensile Elongation	ASTM D4632	%	12	
Trapezoid Tear Strength	ASTM D4533	N (lbs)	503 (113)	503 (113)
CBR Puncture Strength	ASTM D6241	N (lbs)	4005 (900)	
Apparent Opening Size (AOS)[1]	ASTM D4751	mm (U.S. Sieve)	0.43 (40)	
Permittivity	ASTM D4491	sec^{-1}	0.05	
Flow Rate	ASTM D4491	$l/min/m^2$ ($gal/min/ft^2$)	163 (4.0)	
UV Resistance (at 500 hours)	ASTM D4355	% strength retained	70	

[1] ASTM D 4751, AOS is a Maximum Opening Diameter Value

Physical Properties	Test Method	Unit	Typical Value	
Weight	ASTM D5261	g/m^2 (oz/yd^2)	203 (6.0)	
Thickness	ASTM D5199	mm (mils)	0.6 (25)	
Roll Dimensions (width x length)	--	m (ft)	3.8 x 110 (12.5 x 360)	5.3 x 78.7 (17.5 x 258)
Roll Area	--	m^2 (yd^2)	418 (500)	418 (500)
Estimated Roll Weight	--	kg (lb)	109 (240)	109 (240)

Disclaimer: TenCate assumes no liability for the accuracy or completeness of this information or for the ultimate use by the purchaser. TenCate disclaims any and all express, implied, or statutory standards, warranties or guarantees, including without limitation any implied warranty as to merchantability or fitness for a particular purpose or arising from a course of dealing or usage of trade as to any equipment, materials, or information furnished herewith. This document should not be construed as engineering advice.

© 2010 TenCate Geosynthetics North America
Mirafi® is a registered trademark of Nicolon Corporation

TENCATE
materials that make a difference

FGS000393
ETQR24

TABLE 02674-B
GEOTEXTILE REQUIRED PHYSICAL AND HYDRAULIC PROPERTIES

PROPERTIES AND REQUIREMENTS(1,2)	UNITS	SPECIFIED VALUES 6 oz.	SPECIFIED VALUES 8 oz.	SPECIFIED VALUES 10 oz.	SPECIFIED VALUES 12 oz.	TEST METHOD
Type	---	Nonwoven	Nonwoven	Nonwoven	Nonwoven	---
Mass Per Unit Area	oz/yd^2	6.0	8.0	10.0	12.0	ASTM D5261
Grab Tensile Strength	lb	160	200	230	300	ASTM D4632
Grab Tensile Elongation	%	50	50	50	50	ASTM D4632
Trapezoid Tear Strength	lb	65	80	95	115	ASTM D4533
Mullen Burst Strength	lb/in^2	310	380	520	550	ASTM D3786
Puncture Strength	lb	85	110	120	140	ASTM D4833
Apparent Opening Size (AOS)	US Sieve/ mm	70/0.212	80/0.18	100/0.15	100/0.15	ASTM D4751
Permeability	cm/sec	0.25	0.3	0.3	0.3	ASTM D4491
UV Resistance(3)	% strength retained	70	70	70	70	ASTM D4355

Notes:
(1) All values represent minimum average roll values (i.e., any roll in a lot should meet or exceed the values in this table) except for UV resistance, which is a minimum value.
(2) Polymer composition of 95 % polypropylene or polyester by weight
(3) Evaluation to be on 2.0 inch strip tensile specimen after 500 hours of exposure.

2.2 ACCESSORIES

A. Sewing materials: Types recommended by manufacturer for sewing seams in geotextile.

PART 3 EXECUTION

3.1 EXAMINATION

A. Prior to implementing any geotextile work, the Geosynthetic Installer shall carefully inspect the subgrade and verify that all work is complete to the point where the installation of the geotextile may properly commence without adverse impact.

B. If the Contractor has any concerns regarding the installed work, the Engineer and/or Owner shall be notified in writing within 48-hours of his site inspection. Failure to inform the Engineer and/or Owner in writing or installation of the geotextile will be construed as Contractor's acceptance of all prior related work.

C. Any geotextile that does not comply with Table 02674-B of this Section 02674 shall be rejected and replaced with new material in accordance with the Specifications, at no additional cost to Owner.

3.2 PREPARATION

A. Prior to implementing any of the work described in this Section 02674, the Geosynthetic Installer shall become thoroughly familiar with all portions of the work within this Section 02674 or related work, as necessary for successful completion of the Work.

S&ME

SUBMITTAL COVER SHEET

TO:	Fred L. Brown	**Date: 06/10/11**	**Job No.: 1356-07-017-05**
ADDRESS:	Earnhardt Grading, Inc.	Cover System Retrofit	
	7525 Old Plank Road	Pine Hall Road Landfill	
	Stanley, NC 28164	Duke Energy – Belews Creek Steam Station	
	Email: Fred@earnhardtgrading.com	Belews Creek, North Carolina	

Submittal Log ID No.: 002	Revision No.: 00	Contractor Transmittal No.: EGI-002
Specification Section: 02500, 02672, 02675	Date of Submittal Report: 06/06/11	
Submittal Subject: HDPE Piping, LLDPE Geomembrane, Geocomposite Drainage Layer		

Notations:
- ☐ No Exception Taken
- ☐ Corrected as Noted
- ☐ Rejected
- ☐ Revise and Resubmit
- ☐ Submit Specified Items
- ☒ As Noted Herein

Remarks:

The properties reported in the PolyPipe product data sheet meet or exceed the values specified in Table 02500-A.

The information submitted in the LLDPE geomembrane product data sheet, Manufacturer's QC Manual, Installer's project references, and Installer's QA/QC manual are generally consistent with project specifications in Section 02672.

The information submitted in the geocomposite testing procedures, installation manual, and project list are generally consistent with project specifications in Section 02675.

As specified in Section 02672, Part 1.4.A.3 and 4 and Section 02675, Part 1.4.A.1, please provide Manufacturer's Quality Control test results as they are available. Please also provide the items specified in Section 02675, Part 1.4.D and E.

Attachments:
EGI Transmittal No. 002
Table 02500-A from IFC Specifications

Review of this submittal does not relieve the Contractor from their responsibility for deviations from the Contract Documents nor from their responsibility for errors or omissions in the submittal. Contractor is, and Engineer is not, responsible for matters relating to fabrication, shipping, handling, storage, assembly, installation, construction (including safety), and coordination for performing the Work.

6/10/11	6/10/11
Engineer of Record **Date**	**Prepared by** **Date**
Kenneth Daly, P.E.	Kyle Baucom, E.I.

Copies to:
- ☒ David Grogg, Duke Energy
- ☒ Kim Benson, Duke Energy
- ☐
- ☒ S&ME File No. 1356-07-017-05
- ☐
- ☐

PLASTIC FUSION FABRICATORS, INC.

3455 Stanwood Boulevard.
Huntsville, Alabama 35811
Phone: (256) 852-0378
Fax: (256) 852-0388

Submittals

To

EARNHARDT GRADING, INC.

7525 Old Plank Road
Stanley, NC. 28164
Attn: Fred Brown

HDPE DOWN DRAIN PIPE SYSTEM

For

S&ME Project No. 1356-07-017 Phase 05

PINE HALL ROAD ASH LANDFILL CLOSURE - COVER SYSTEM RETROFIT
DUKE ENERGY - BELEWS CREEK STEAM STATION

3195 Pine Hall Road
Belews Creek, NC. 27009

PFF Job # F11144

PFF Project Manager: Leif Martin
Direct Phone: (256)746.1257
Email: lmartin@plasticfusion.com

WE SOLVE CONTAINMENT PROBLEMS !

PolyPipe® EHMW PE3408/PE3608 Pipe

PolyPipe

Extra High Molecular Weight (EHMW) High Density Polyethylene for use in industrial applications such as underground fire mains, mining, landfill, water reclamation or sewer.

Typical Printline: 12" IPS SDR 9 – POLYPIPE® EHMW – PE3408/PE3608 – ASTM F714 C3 – MANUFACTURING CODE

TYPICAL PHYSICAL PROPERTIES				
PROPERTY	ASTM TEST METHOD	*NOMINAL VALUES SI UNITS	ENGLISH UNITS	
Density, Natural	D1505	0.946 gm/cc ✓	--	
Density, Black	D1505	0.955 gm/cc ✓	--	
Melt Index (190°C/2.16 kg)	D1238	0.07 gm/10 min. ✓	--	
Flow Rate (190°C/21.6 kg)	D1238	8.5 gm/10 min.	--	
Tensile Strength @ Yield	D638	24.1 MPa	3,500 psi ✓	
Ultimate Elongation	D638	>800%	>800% ✓	
Flexural Modulus	D790	938 MPa	136,000 psi ✓	
2% Secant				
Environmental Stress Crack Resistance (ESCR)				
F_0, Condition C	D1693	>10,000 hrs.	>10,000 hrs. ✓	
PENT	F1473	>100 hrs.	>100 hrs.	
Brittleness Temperature	D746	<-117°C	<-180°F ✓	
Hardness, Shore D	D2240	64	64 ✓	
Vicat Softening Temperature	D1525	124°C	255°F	
Izod Impact Strength (Notched)	D256	0.37 KJ/m	7 ft – lb_f/in	
Volume Resistivity	D991	$>10^{15}$ ohm-cm	--	
Thermal Expansion Coefficient		$2x10^{-4}$ cm/cm/°C	$1.0x10^{-4}$ in/in/°F	OK
CELL CLASSIFICATION:	D3350	345464C ✓	Grade PE36	
MATERIAL CLASSIFICATION:	D1248	Type III ✓	Class C ✓	
		Category 5 ✓		
PPI HYDROSTATIC DESIGN BASIS (HDB)	D2837	11.0 MPa @ 23°C	1,600 psi @ 73.4°F ✓	
(As listed in PPI TR-4)		5.5 MPa @ 60°C	800 psi @ 140°F ✓	
PPI HYDROSTATIC DESIGN STRESS (HDS)		5.5 MPa @ 23°C	800 psi @ 73.4°F	
(As established by the Hydrostatic Stress Board (HSB) of the Plastics Pipe Institute (PPI))				

**Nominal values are intended to be guides only, and not as specification limit.*
**Some of the data listed above was determined from compression molded test specimens; therefore, may deviate from pipe specimens.*

PolyPipe, Inc.

2406 N. I-35 | P.O. Box 390 | Gainesville, TX 76241
Phone 940.665.1721 | 800.433.5632 | Facsimile 940.668.8612
Sales Facsimile 940.668.2704 | www.polypipeinc.com

KB

PolyPipe® EHMW PE3408/PE3608 Pipe

Pipe Data and Pressure Ratings – IPS

18" & 24" SDR 17 IPS Down Drain Pipe.

PolyPipe®

SDR 26 If Available

Pressure Rating		Class 265 DR7		Class 200 DR9		Class 160 DR11		Class 130 DR13.5		Class 100 DR17		Class 80 DR21		Class 65 DR26		Class 50 DR32.5	
Nominal Pipe Size	OD Size, inches	Min. Wall, inches	Weight, lbs/ft	Min. Wall, inches	Weight, lbs/ft	Min. Wall, inches	Weight, lbs/ft	Min. Wall, inches	Weight, lbs/ft	Min. Wall, inches	Weight, lbs/ft	Min. Wall, inches	Weight, lbs/ft	Min. Wall, inches	Weight, lbs/ft	Min. Wall, inches	Weight, lbs/ft
½"	0.840	0.120	0.12	0.093	0.10	0.076	0.08	—	—	—	—	—	—	—	—	—	—
¾"	1.050	0.150	0.18	0.117	0.15	0.095	0.13	—	—	—	—	—	—	—	—	—	—
1"	1.315	0.188	0.29	0.146	0.23	0.120	0.20	—	—	—	—	—	—	—	—	—	—
1 ¼"	1.660	0.237	0.46	0.184	0.37	0.151	0.31	0.123	0.26	—	—	—	—	—	—	—	—
1 ½"	1.900	0.271	0.60	0.211	0.49	0.173	0.41	0.141	0.34	—	—	—	—	—	—	—	—
2"	2.375	0.339	0.94	0.264	0.76	0.216	0.64	0.176	0.53	0.140	0.43	—	—	—	—	—	—
3"	3.500	0.500	2.05	0.389	1.66	0.318	1.39	0.259	1.15	0.206	0.93	0.167	0.76	0.135	0.62	—	—
4"	4.500	0.643	3.38	0.500	2.74	0.409	2.29	0.333	1.91	0.265	1.54	0.214	1.26	0.173	1.03	0.138	0.83
5"	5.375	0.768	4.83	0.597	3.91	0.489	3.27	0.398	2.72	0.316	2.20	0.256	1.80	0.207	1.47	0.165	1.19
5"	5.563	0.795	5.17	0.618	4.18	0.506	3.51	0.412	2.91	0.327	2.35	0.265	1.93	0.214	1.57	0.171	1.27
6"	6.625	0.946	7.34	0.736	5.93	0.602	4.97	0.491	4.13	0.390	3.34	0.315	2.74	0.255	2.23	0.204	1.80
7"	7.125	1.018	8.49	0.792	6.86	0.648	5.75	0.528	4.78	0.419	3.86	0.339	3.17	0.274	2.58	0.219	2.08
8"	8.625	1.232	12.43	0.958	10.05	0.784	8.43	0.639	7.00	0.507	5.66	0.411	4.64	0.332	3.78	0.265	3.05
10"	10.750	1.536	19.31	1.194	15.62	0.977	13.09	0.796	10.88	0.632	8.79	0.512	7.20	0.413	5.88	0.331	4.74
12"	12.750	1.821	27.17	1.417	21.97	1.159	18.41	0.944	15.30	0.750	12.36	0.607	10.13	0.490	8.27	0.392	6.67
14"	14.00	2.000	32.76	1.556	26.49	1.273	22.20	1.037	18.45	0.824	14.91	0.667	12.22	0.538	9.97	0.431	8.04
16"	16.00	2.286	42.79	1.778	34.60	1.455	28.99	1.185	24.09	0.941	19.47	0.762	15.96	0.615	13.02	0.492	10.51
18"	18.00	2.571	54.15	2.000	43.79	1.636	36.70	1.333	30.49	1.059	24.64	0.857	20.20	0.692	16.48	0.554	13.30
20"	20.00	2.857	66.85	2.222	54.06	1.818	45.30	1.481	37.64	1.176	30.42	0.952	24.94	0.769	20.35	0.615	16.42
22"	22.00	—	—	2.444	65.41	2.000	54.82	1.630	45.55	1.294	36.81	1.048	30.17	0.846	24.62	0.677	19.86
24"	24.00	—	—	2.667	77.85	2.182	65.24	1.778	54.21	1.412	43.80	1.143	35.99	0.923	29.30	0.738	23.64
28"	28.00	—	—	3.111	105.96	2.545	88.80	2.074	73.78	0.647	59.62	1.333	48.87	1.077	39.88	0.862	32.17
30"	30.00	—	—	3.333	121.63	2.727	101.93	2.222	84.70	1.765	68.44	1.429	56.11	1.154	45.78	0.923	36.93
32"	32.00	—	—	3.556	138.39	2.909	115.98	2.370	96.37	1.882	77.87	1.524	63.84	1.231	52.09	0.985	42.02
36"	36.00	—	—	4.000	175.15	3.273	146.78	2.667	121.96	2.118	98.55	1.714	80.79	1.385	65.92	1.108	53.19
42"	42.00	—	—	—	—	—	—	3.111	166.01	2.471	134.14	2.000	109.97	1.615	89.73	1.292	72.39
48"	48.00	—	—	—	—	—	—	—	—	2.824	175.21	2.286	143.63	1.846	117.19	1.477	94.55
54"	54.00	—	—	—	—	—	—	—	—	3.176	221.74	2.571	181.78	2.077	148.32	1.662	119.67
63"	63.00	—	—	—	—	—	—	—	—	3.706	301.82	3.000	247.42	2.423	201.89	1.938	162.88
65"	65.00	—	—	—	—	—	—	—	—	3.824	321.28	3.095	263.38	2.500	214.91	2.000	173.39

**See notes on Page 3 for product information and pressure rating information.*

KB

PLASTICFUSION FABRICATORS

"BETTER BY DESIGN"®

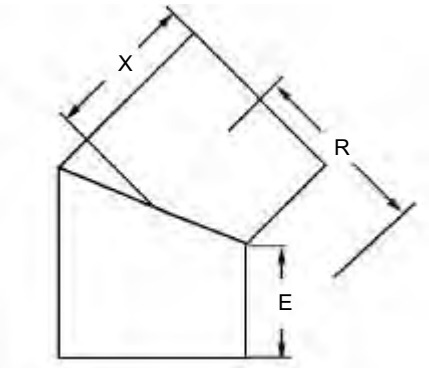

IPS 15° & 18Ü
2 Segment Elbow Fabricated
(Dimensions in Inches)

IPS Size	R/D Ratio	R	X	E	SDR	WPR (psi)	Weight (lbs)
4"	1.5	6.8	6.9	6.0	7 9 11&17	200 160 128/80	3.5 3 2.5
6"	1.5	10.0	7.4	6.0	7 9 11&17	200 160 128/80	8 7 6
8"	1.25	10.7	8.3	6.5	7 9 11 17	200 160 128 80	19 15 13 9
10"	1.25	13.5	8.7	6.5	7 9 11 17	200 160 128 80	31 26 21 15
12"	1.25	16.0	10.6	8.0	7 9 11 17	200 160 128 80	52 42 35 24
14"	1.05	14.5	10.9	8.0	7 9 11 17	200 160 128 80	66 53 44 30
16"	1.05	16.8	11.3	8.0	7 9 11 17	200 160 128 80	86 70 58 39
18"	1.05	18.4	11.7	8.0	7 9 11 17	200 160 128 80	114 93 78 53
20"	1.02	20.4	12.1	8.0	7 9 11 17	200 160 128 80	148 119 99 67

- **IPS 2 Segment Elbows**

Other sizes, DR's and custom radius ell's not listed are available.

Sizes 24" and smaller meet AWWA C906 fitting requirements, sizes 26" and larger are quoted per fitting.

PLASTICFUSION FABRICATORS

"BETTER BY DESIGN"®

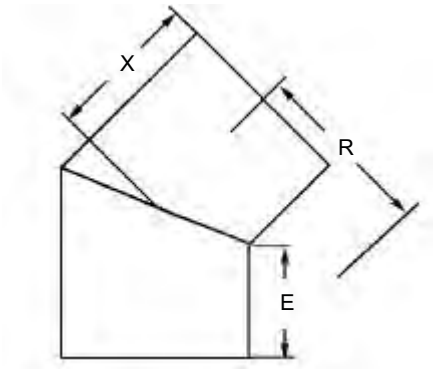

IPS 15° & 18Ü 2 Segment Elbow Fabricated (continued)

(Dimensions in Inches)

IPS Size	R/D Ratio	R	X	E	SDR	WPR (psi)	Weight (lbs)
22"	1.02	22.4	12.6	8.0	7 9 11 17	200 160 128 80	178 144 121 82
24"	1.02	24.5	13.0	8.0	7 9 11 17	200 160 128 80	221 180 151 101
26"	1.02	26.5	15.4	10.0	9 11 17	160 128 80	247 208 141
28"	1.02	28.5	15.8	10.0	9 11 17	160 128 80	297 249 165
30"	1.02	30.5	16.2	10.0	11 17	128 80	286 193
32"	1.20	38.0	16.6	10.0	11 17	128 80	331 224
34"	1.20	41.0	17.0	10.0	11 17	128 80	383 257
36"	1.20	43.0	17.5	10.0	11 17	128 80	441 296
42"	1.20	50.0	24.7	16.0	17 21	80 65	432 352
48"	1.20	58.0	25.9	16.0	21 26	65 50	478 389
54"	1.20	64.0	27.2	16.0	26 32.5	50 40	538 432

Other sizes, DR's and custom radius ell's not listed are available.

Sizes 24" and smaller meet AWWA C906 fitting requirements, sizes 26" and larger are quoted per fitting.

Linear Low Density Polyethylene Micro Spike® Liner

Product Data

Property	Test Method	Values			
Thickness, nominal, (mm)		40 (1.0)	~~60 (1.5)~~	~~80 (2.0)~~	~~100 (2.5)~~
Thickness (min. ave.), mil (mm)	ASTM D5994*	38 (.95)	57 (1.43)	76 (1.90)	95 (2.38)
Thickness (lowest indiv. for 8 of 10 spec.), mil (mm)	ASTM D5994*	36 (.90)	54 (1.35)	72 (1.80)	90 (2.25)
Thickness (lowest indiv. for 1 of 10 spec.), mil (mm)	ASTM D5994*	34 (.85)	51 (1.28)	68 (1.70)	85 (2.13)
*The thickness values may be changed due to project specifications (i.e., absolute minimum thickness)					
Asperity Height (min. ave.), mil (mm)	GRI GM12/ASTM D7466	16 (.41)	16 (.41)	16 (.41)	16 (.41)
Density, g/cc, maximum	ASTM D792, Method B	0.939	0.939	0.939	0.939
Tensile Properties (ave. both directions)	ASTM D6693, Type IV				
Strength @ Break (min. ave.), lb/in width (N/mm)	2 in/minute	112 (19.6)	168 (29.4)	224 (392)	280 (49.0)
Elongation @ Break (min. ave.), % (GL=2.0in)	5 specimens in each direction	400	400	400	400
Tear Resistance (min. ave.), lbs. (N)	ASTM D1004	25 (111)	36 (160)	50 (222)	60 (267)
Puncture Resistance (min. ave.), lbs. (N)	ASTM D4833	50 (222)	70 (310)	90 (400)	115 (512)
Carbon Black Content (range in %)	ASTM D4218	2 - 3	2 - 3	2 - 3	2 - 3
Carbon Black Dispersion (Category)	ASTM D5596	Only near spherical agglomerates for 10 views: 9 views in Cat. 1 or 2, and 1 view in Cat. 3			
Oxidative Induction Time, minutes	ASTM D3895, 200°C, 1 atm O_2	≥100	≥100	≥100	≥100
Melt Flow Index, g/10 minutes	ASTM D1238, 190°C, 2.16kg	≤1.0	≤1.0	≤1.0	≤1.0
Oven Aging	ASTM D5721	60	60	60	60
with HP OIT, (% retained after 90 days)	ASTM D5885, 150°C, 500psi O_2				
UV Resistance	GRI GM11	20hr. Cycle @ 75°C/4 hr. dark condensation @ 60°C			
with HP OIT, (% retained after 1600 hours)	ASTM D5885, 150°C, 500psi O_2	35	35	35	35
2% Secant Modulus (max.), lb/in. (N/mm)	ASTM D5323	2400 (420)	3600 (630)	4800 (840)	6000 (1050)
Axi-Symmetric Break Resistance Strain, % (min.)	ASTM D5617	30	30	30	30

These product specifications meet or exceed GRI's GM17

Supply Information (Standard Roll Dimensions)

Thickness		Width		Length		Area (approx.)		Weight (average)*	
mil	mm	ft	m	ft	m	ft^2	m^2	lbs	kg
40	1.0	23	7	710	283.47	16,330	1,514.87	3,900	1,770
60	1.5	23	7	505	216.41	11,615	1,078	3,900	1,770
80	2.0	23	7	385	117.35	8,855	821	3,900	1,770
100	2.5	23	7	310	94.49	7,130	661	3,900	1,770

Notes:

All rolls are supplied with two slings. All rolls are wound on a 6 inch core. Special lengths are available on request. All roll lengths and widths have a tolerance of ±1%
**The weight values may change due to project specifications (i.e. absolute minimum thickness or special roll lengths) or shipping requirements (i.e. international containerized shipments).*

All information, recommendations and suggestions appearing in this literature concerning the use of our products are based upon tests and data believed to be reliable; however, it is the users responsibility to determine the suitability for their own use of the products described herein. Since the actual use by others is beyond our control, no guarantee or warranty of any kind, expressed or implied, is made by Agru/America as to the effects of such use or the results to be obtained, nor does Agru/America assume any liability in connection herewith. Any statement made herein may not be absolutely complete since additional information may be necessary or desirable when particular or exceptional conditions or circumstances exist or because of applicable laws or government regulations. Nothing herein is to be construed as permission or as a recommendation to infringe any patent.

500 Garrison Road, Georgetown, South Carolina 29440 843-546-0600 800-373-2478 Fax: 843-527-2738
email: salesmkg@agruamerica.com www.agruamerica.com

© Agru America, Inc. 2010

KB

Paul Elliott

From: Grant Palmer [gp@agruamerica.com]
Sent: Friday, June 03, 2011 10:56 AM
To: PFF Paul Elliott
Cc: 'Dee Strong'; 'Rick Cannon'
Subject: Duke Energy, Belews Creek SS, NC 5-11 lin spec clar - Agru

Importance: High

Upon review of the geomembrane property specifications for the above project: Section 02672 (April 2011)(1356-07-017-05 S&ME)

Items: 40 LLDPE textured (Black)

Table 2672-B, page 02672-7

- GRI GM12 Asperity Height has been replaced with ASTM D7466. D7466 was created specifically to replace GRI GM12, and essentially duplicates the method. ASTM D7466 is now the only Asperity height method listed in the GRI GM13 & GM17 Standards.
- Carbon Black Content will be tested via ASTM D4218, not D1603 as listed. Both of these Carbon Content methods are listed as acceptable in the GRI GM13& 17 Standards.

Grant Palmer

Quality Control Manager

Agru America
500 Garrison Road, Georgetown, SC 29440
Ph: (843) 546-0600 Ext 1014
mobile (843) 240-1379
fax: (843) 527-2738
gp@agruamerica.com
www.agruamerica.com

CONFIDENTIALITY NOTICE: This message is intended to be viewed only by the listed recipients(s). It may contain information that is privileged, confidential and /or exempt from disclosure under applicable law. Any dissemination, distribution or copying of this message is strictly prohibited without prior written permission. If you are not an intended recipient, or if you have received this communication in error, please notify us immediately by return e-mail and permanently remove the original message and any copies from your computer and all back-up systems.

KB

MANUFACTURING QUALITY CONTROL

SALES OFFICE:

AGRU AMERICA, INC.

500 Garrison Road

Georgetown, SC 29440

Toll Free: (800) 373-2478

Telephone: (843) 546-0600

Fax: (843) 527-2738

salesmkg@agruamerica.com

www.agruamerica.com

July 23, 2004

AGRU AMERICA, INC. - QA/QC

Manufacturing – Quality Assurance/Quality Control

AGRU AMERICA, Inc. extrudes high density polyethylene (HDPE) and linear low density polyethylene (LLDPE) geomembrane at its plant located at 500 Garrison Road, Georgetown, South Carolina, 29440.

Our USA Manufacturing Quality Assurance Program is dependent on the utilization of an in-house laboratory which is, when necessary, complemented with testing performed by certified outside laboratories such as:

- Precision Geosynthetic Laboratories; Anaheim, CA
  Telephone (714) 520-9631; Fax (714) 520-9637
- TRI/Environmental, Inc.; Austin, Texas
  Telephone (512) 263-2101; Fax (512) 263-2558

  And other GRI-LAP accredited laboratories.

Raw Material – Manufacturer's Certificate of Conformity

HDPE and LLDPE resin is supplied to our plant in bulk and subjected to the following procedures:

- Prior to shipment, our resin supplier submits a certificate of analysis. Once approved, the resin is released for shipment to our plant.
- One sample is taken from each rail car after arrival and tested as follows:
  Melt Index ASTM D1238 190°C, 2.16kg, and Density ASTM D792.
- Once the tests have been completed and results found to be in compliance with our requirements, the resin is then unloaded into our silo system.
- At this stage, our supplier has performed one battery of tests and Agru America has performed one to verify the manufacturer's certificate of analysis.
- Off specification resin is returned to the supplier.
- The Manufacturer's MFI Test Data is reported on the Quality Certificate (Agru America's MFI Testing is done to verify this data).

The Extrusion Process

The resin is conveyed through a vacuum pump system and flexible hoses to a dryer hopper, feeding the resin by gravity into an 8-inch barrel. This barrel is divided into five heating zones, each heating zone being computer controlled and constantly monitored.

A screw in the barrel turns at a prescribed and monitored speed. It conveys the resin slowly to full plastication, and then the plasticated resin is fed through a manifold into a coat hanger die having a width of approximately 24 feet. The die lips are open to a prescribed distance governed by the thickness of the geomembrane to be extruded.

Exiting the die, the plasticated resin forms a controlled and monitored bead, which feeds into a chrome three-roll stack in a prescribed pattern. Each chrome roll is set at a prescribed temperature, controlled by water circulation.

Exiting the controlled cooling of the roll stack, the geomembrane travels down the take off haulers towards the winder. On the way to the take off, the liner is trimmed to bring the finished width to the applicable standard. Trimmings are granulated.

The trimmed edge of one side of the geomembrane is marked at every 3.28 ft with thickness, Agru America name and year of manufacture. This marking also serves as product identification.

The geomembrane is visually inspected for surface defects as it travels down the take off by both the extruder and the winder operators.

The geomembrane is wound on a recycled HDPE core having 6” ID (150mm), 7” OD (175mm) and 22’8” (6.8m) length. Each smooth roll weighs approximately 3,000 pounds (1360 kg). Microspike® rolls weigh approximately 3,200 pounds (1450 kg). All rolls are fitted with two nylon slings when shipped.

Post Extrusion Quality Control

Once start-up conditions are over and commercial extrusion is initiated, post-production quality control comes into operation. A series of test procedures are performed based upon either our Standard Frequency of testing (attached), or frequencies required by customer specifications.

A sample approximately 11” by the full width of the geomembrane is taken from every roll. Based on the specified test frequencies, certain specimens are die cut, tested and the results summarized on the Quality Certificate issued by our Quality Control Department. The certificate is signed electronically

by the Quality Control Manager. The Quality Control Manager reports directly to the President of the Company.

Rolls failing to comply with either Customer Project Specifications and/or our own latest revision to our published data sheets are set aside and re-classified as off-spec (Class B rolls).

Quality Certificates are provided for all rolls of geomembranes (sample smooth & Microspike® certificates are attached), with the exception of off-spec (Class B rolls).

Sometimes a third party Quality Assurance representative is mandated by the owner of a project to oversee our manufacturing QA. We gladly subscribe to this procedure and make all our records available 24 hours a day for the duration of the mandate.

The following roll identification items are reported in our Quality Certificate:

Roll number

(example) **203366 -01**

First digit	machine
Second and third digits	week of year
Fourth digit	day of week (Monday=1, Sunday=7)
Last two digits	roll number (first roll of week is 01, etc.)

The two last digits separated from the others indicate the year the roll was produced.

Using the above key:

Roll #203366 -01 was produced on Liner Machine #2 on Wednesday, January 17, 2001.

Product Description (liner type: Smooth, Microspike®, Drain®, Super Gripnet®, etc.)

Roll Length & Width in feet & meters

Raw material lot and/or batch number and supplier/product identification (from Resin Manufacturer's Certificate of Analysis – sample attached)

The following test results are reported in the Quality Certificate, derived from our Standard Test Frequency (attached) and/or supplied raw material manufacturer Certificates of Analysis:

Test / Method	Results Reported & Modifications to Standard (if any)
Thickness †ASTM D5199(Smooth), or †D5994(Textured) **(Both Modified)**	Minimum, Maximum, and Average Sheet Thickness in mm and mils. **Modification from Standard** = Measurements are taken upon sample reaching Lab Temperature Equilibrium.
Asperity Height GRI GM12 **(Modified)** Textured liner only	Asperity height in mils **Modifications from Standard** = Gage used is accurate to 0.02mm, **not** 0.25mm. Edge samples are collected from the smooth/textured junction, **not** 1 foot from edge. ASTM D5994 specimens are used for this test, not direct placement.
Density †ASTM D792	Density in g/cc
Melt Flow Index †ASTM D1238	g/10minutes (Conditions =190°C, 2.16kg). **NOTE:** Resin Manufacturer's **Certificate of Analysis result** is reported. Our testing verifies this result.
Carbon Black Content †ASTM D4218	% Carbon Black by weight
Carbon Black Dispersion †ASTM D5596	Category
Tensile Strength †ASTM D6693 †ASTM D638 Both Type IV, 2 inches / minute **(Both Modified)**	Average Strength @ Yield in psi, ppi, & N/mm Average Strength @ Break in psi, ppi, & N/mm Average Elongation @ Yield in % Average Elongation @ Break in % **Modification from Standard** = Average of MD & TD results are reported **NOTE 1:** The D6693 results equate to the following **D638 Modifications**: Gage Length for Yield = 1.3", for Break = 2" **NOTE 2:** Yield data not reported for LLDPE
Dimensional Stability †ASTM D1204 **(Modified)**	Average Dimensional Change in % **Modification from Standard** = Average Dimensional Change of MD & TD is reported.
Tear Resistance †ASTM D1004 **(Modified)**	Tear Resistance in Lbs & N. **Modifications from Standard** = Test is run upon sample reaching Lab Temperature Equilibrium. Average Tear Resistance of MD & TD is reported.
Puncture Resistance †ASTM D4833 †FTMS 101C Method 2065 **(Both Modified)**	Puncture Resistance in Lbs & N. **Modification from Standard** = Test is run upon sample reaching Lab Temperature Equilibrium.
Environmental Stress Crack Resistance (ESCR) †ASTM D1693 **(CERTIFIED)**	This test is n longer run by Agru America, and the result is now certified by Agru America for 1500 hours (Certification letter is attached, as well as GAI-LAP's approval of the certification.)
Notched Constant Tensile Load †ASTM D5397 (Single Point, Appx.)	Pass / Fail at 300 hours (or as required by customer specifications) This test run on HDPE only, and on smooth edge of textured liners.

†GRI-LAP Accredited for this method (INCLUDING Modifications)

The following Test methods are also performed per railcar in our Standard MQC, but results are **not** reported on our Quality Certificates (results can be forwarded if necessary).

Test / Method	Results Reported
Oxidative Induction Time (OIT) ASTM D3895 Standard, 200°C, 1atm. **THIS TEST DONE IN-HOUSE BY AGRU AMERICA**	OIT Time in minutes
Low Temperature Brittleness ASTM D746 **THIS TEST OUTSOURCED TO AN ACCREDITED 3rd PARTY LAB**	Pass / Fail for each specimen (5 specimens in both MD & TD), % of samples passing. **NOTE:** Standard MQC Temperature tested to is **-60°C**. Lower Temperatures can be done if required by customer specifications.

Additional Test Procedures
(Available if Specified from GRI-LAP Accredited Third Party Labs)

Hydrostatic Resistance	ASTM D751
Volatile Loss	ASTM D1203
Resistance to Soil Burial	ASTM D3083 using ASTM D638 Type IV dumbbell at 2”/min.
Water Absorption	ASTM D570
Coefficient of Thermal Expansion	ASTM D696
Friction Angle Direct Shear Method	ASTM D5321
Moisture Vapor Transmission Rate 100°F - 100% RH	ASTM E96
Transmissivity Various gradients & confining pressure	ASTM D4716
Multi-axial Tensile Strain at Rupture (percent)	ASTM D5617

Standard Frequency of Testing

agru america

Product Data

Property	Test Method	Frequency of testing (minimum)*
Thickness (min. ave.), mil	ASTM D5994/D5199	per roll ✓
Asperity Height (min. ave.), mil	GRI GM-12 (for textured liner)	per roll, alternating top/bottom for dbl sided textured liner only ✓
Density, g/cc, minimum	ASTM D792, Method B	200,000 lbs (railcar) ✓
Tensile Properties (ave. both directions)	ASTM D6693, Type IV	
Strength @ Yield (min. ave.), lb/in width	2 in/minute	
Elongation @ Yield (min. ave.), % (GL=1.3in)	5 specimens in each direction	20,000 lbs ✓
Strength @ Break (min. ave.), lb/in width		
Elongation @ Break (min. ave.), % (GL=2.0in)		
Tear Resistance, lbs. (min. ave.)	ASTM D1004	45,000 lbs ✓
Puncture Resistance, lbs. (min. ave.)	ASTM D4833	45,000 lbs ✓
Carbon Black Content (range in %)	ASTM D4218	20,000 lbs ✓
Carbon Black Dispersion (Category)	ASTM D5596	45,000 lbs ✓
Stress Crack Resistance (NCTL), hours	ASTM D5397, Appendix	200,000 lbs (railcar)
Oxidative Induction Time, minutes	ASTM D3895, 200°C, 1 atm O_2	200,000 lbs (railcar) on finished liner ✓
Melt Flow Index, g/10 minutes	ASTM D1238, 190°C, 2.16kg	200,000 lbs (railcar) on incoming resin
Low Temperature Brittleness, °C	ASTM D746, -60°C	200,000 lbs (railcar) on finished liner
Oven Aging with HP OIT, (% retained after 90 days)	ASTM D5721 ASTM D5885, 150°C, 500psi O_2	per resin formulation ✓
UV Resistance with HP OIT, (% retained after 1600 hours)	GRI GM11 ASTM D5885, 150°C, 500psi O_2	per resin formulation
2% Secant Modulus, lb/in. (max.)	ASTM D5323	per resin formulation-for LLDPE liner only ✓
Axi-Symmetric Break Resistance Strain, % (min.)	ASTM D5617	per resin formulation-for LLDPE liner only ✓

These test frequencies meet or exceed GRI's GM-13

***Theses test frequencies may be changed based on project specifications, and represent the minimum MQC testing performed. Additional costs may be incurred if required testing is greater than listed above**

All information, recommendations and suggestions appearing in this literature concerning the use of our products are based upon tests and data believed to be reliable; however, it is the user's responsibility to determine the suitability for their own use of the products described herein. Since the actual use by others is beyond our control, no guarantee or warranty of any kind, expressed or implied, is made by Agru/America as to the effects of such use or the results to be obtained, nor does Agru/America assume any liability in connection herewith. Any statement made herein may not be absolutely complete since additional information may be necessary or desirable when particular or exceptional conditions or circumstances exist or because of applicable laws or government regulations. Nothing herein is to be construed as permission or as a recommendation to infringe any patent.

Executive Offices: 500 Garrison Road, Georgetown, SC 29440 843-546-0600 800-321-1379 Fax: 843-546-0516
Sales Office: 700 Rockmead, Suite 150, Kingwood, TX 77339 281-358-4741 800-373-2478 Fax: 281-358-5297
email: salesmkg@agruamerica.com

KB

CoA Date: 07/14/2004

Certificate of Analysis

Shipped To: AGRU AMERICA INC
500 GARRISON RD
GEORGETOWN SC 29440
USA

Recipient: GRANT PALMER
Fax:

CPC Delivery #: 86671544
PO #: 03814
Weight: 190000 LB
Ship Date: 07/14/2004
Package: BULK
Mode: Hopper Car
Car #: GOCX058461
Seal No: 301173

Product:
MARLEX POLYETHYLENE K307 BULK

Lot Number: 8140404

Property	Test Method	Value	Unit
Melt Index	ASTM D1238	0.260	g/10mi
HLMI Flow Rate	ASTM D1238	22.00	g/10mi
Density	ASTM D1505	0.9380	g/cm3
Pellet Count	P02.08.03	30.000	pel/g
Production Date		3/22/04	

The data set forth herein have been carefully compiled by Chevron Phillips Chemical Company LP.
However, there is no warranty of any kind, either expressed or implied, applicable to its use, and the user assumes all risk and liability in connection therewith.

Jackie Edwards
Certification Systems Specialist

For CoA questions contact Carol Meza at 713-475-3625

agru america quality control dept.

quality certificate

ROLL # **129676-04** Lot #: **8140396** **Liner Type: MICROSPIKE™ HDPE**

Measurement ASTM D5994 (Modified)		METRIC		ENGLISH	
	MIN:	**1.53**	mm	**60**	mil
	MAX:	**1.74**	mm	**69**	mil
Asperity GRI GM12: **34** mil	AVE:	**1.63**	mm	**64**	mil

Thickness.....	**1.5**	**mm**	**60**	**mil**
Length.....	**125**	m	**410.1**	feet
Width.....	**7.00**	m;	**23.0**	feet

								TEST RESULTS	
Specific Gravity ASTM D792	Density		g/cc					**.945**	
MFI ASTM D1238 COND. E GRADE: **K307**	Melt Flow Index 190ºC /2160 g		g/10 min					**.23**	
Carbon Black Content ASTM D4218	Range		%					**2.35**	
Carbon Black Dispersion ASTM D5596	Category							**1**	
Tensile Strength ASTM D6693 ASTM D638 (Modified) (2 inches / minute)	Average Strength @ Yield	**28**	N/mm	**160**	ppi	**2,489**	psi		
	Average Strength @ Break	**41**	N/mm	**232**	ppi	**3,614**	psi		
Elongation ASTM D6693 ASTM D638 (Modified) (2 inches / minute) Lo = 1.3" Yield	Average Elongation @ Yield		%					**18.24**	
Lo = 2.0" Break	Average Elongation @ Break		%					**539.2**	
Dimensional Stability ASTM D1204 (Modified)	Average Dimensional change		%					**-0.86**	
Tear Resistance ASTM D-1004 (Modified)	Average Tear Resistance	**233.8**	N			**52.570**	lbs		
Puncture Resistance FTMS 101 Method 2065 (Modified)	Load	**437.9**	N			**98.458**	lbs		
Puncture Resistance ASTM D4833 (Modified)	Load	**643.6**	N			**144.70**	lbs		
ESCR ASTM D1693	Minimum Hrs w/o Failures	1500 hrs						**CERTIFIED**	
Notched Constant Tensile Load ASTM D5397	pass / fail @ 30%	300 hrs						**ONGOING**	

CUSTOMER:

P.O.#:

DESTINATION

Date:..... **7-17-04**

Signature.....

Quality Control Department

60HDmic.FRM
REV 02
7/22/04

agru america quality control dept.

quality certificate

ROLL # **128315-04** Lot # **8140399** **Liner Type:SMOOTH HDPE**

Thickness Measurement ASTM D5199 (Modified)		METRIC		ENGLISH	
	MIN:	**1.468**	mm	**58**	mil
	MAX:	**1.709**	mm	**67**	mil
	AVE:	**1.591**	mm	**63**	mil

Thickness	**1.5mm**		**60mil**	
Length	**128**	m	**420**	feet
Width	**6.86**	m	**22.5**	feet

Specific Gravity ASTM D792		Density	g/cc				**.947**	
MFI ASTM D1238 COND. E GRADE:	**K307**	Melt Flow Index 190ºC /2160 g - g /10 min					**.29**	
Carbon Black Content ASTM D4218		Range	%				**2.37**	
Carbon Black Dispersion ASTM D5596		Category					**1**	
Tensile Strength ASTM D6693 ASTM D638 (Modified) (2 inches / minute)		Average Strength @ Yield	**27**	N/mm	**151**	ppi	**2,524**	psi
		Average Strength @ Break	**48**	N/mm	**274**	ppi	**4,575**	psi
Elongation ASTM D-6693 ASTM D638 (Modified) (2 inches / minute) Lo = 1.3" Yield Lo = 2.0" Break		Average Elongation @ Yield	%				**17.60**	
		Average Elongation @ Break	%				**840.8**	
Dimensional Stability ASTM D1204 (Modified)		Average Dimensional Change	%				**-0.24**	
Tear Resistance ASTM D1004 (Modified)		Average Tear Resistance	**222**	N			**49.989**	lbs
Puncture Resistance FTMS 101 Method 2065 (Modified)		Load	**418**	N			**93.990**	lbs
Puncture Resistance ASTM D4833 (Modified)		Load	**623**	N			**140.06**	lbs
ESCR ASTM D1693		Minimum Hrs w / o Failures	1500 hrs				**CERTIFIED**	
Notched Constant Tensile Load ASTM D5397		pass / fail @ 30%	300 hrs				**pass**	

CUSTOMER:

P.O.#:

DESTINATION:

Date:..... **7-7-04**

Signature.....

Quality Control Department

60HDSM.FRM
REV 05
7/22/04

PROJECT REFERENCES

Plastic Fusion Fabricators, Inc.
3455 Stanwood Boulevard Huntsville, Alabama 35811
1-800-356-1480 (256)852-0378 (256)852-0442 Fax

PROJECT NAME/LOCATION	OWNER/CUSTOMER	ENGINEER	PROJECT TYPE	MIL/TYPE	SQ. FT. INST.	COMP. DATE	PROJECT MGR.
WM-LIVE OAK LANDFILL CONLEY, GA	WASTE MANAGEMENT 2859 PACES FERRY ROAD ATLANTA, GA 30339		LANDFILL CAP LINER	60 - HDPE TX	4,588,218	9/26/06	P. ELLIOTT
	FRANK GRAY			GEOT.	4,588,218		
	678-339-0640						
SANDERS LEAD TROY, AL	SANDERS LEAD COMPANY PO BOX 707 TROY, AL 36081		LANDFILL LINER	60 - HDPE TX	322,313	11/14/06	P. ELLIOTT
	CHRIS RUTHERFORD			GCL	318,992		
	334-566-1563			GEOCOMP.	318,992		
NUCOR STEEL TRINITY, AL	NUCOR STEEL DECATUR, LLC PO BOX 2249 DECATUR, AL 35609-2249		SCRAP YARD LINER	60 - HD	238,185	8/24/06	P. ELLIOTT
	DONNY STEVENS						
	256-301-3538						
WALKER MOUNTAIN ROAD LANDFILL PHASE 7	ROME-FLOYD COUNTY SWD 601 BROAD STREET ROME, GA 30161	JJ&G 6801 GOVERNORS LAKE NORCROSS, GA 30071	LANDFILL LINER	60 - HDPE TX	500,000	9/8/06	P. ELLIOTT
	JAMIE JENKINS	MIKE FEENEY		GEOTEXTILE	500,000		
	256-734-6611	770-455-8555		GCL	66,900		
				GEOCOMP	66,900		
WOLF CREEK LANDFILL CELL 5 DRY BRANCH, GA	ADVANCED DISPOSAL SERV. 8880 OLD FEDERAL ROAD BALL GROUND, GA 30107	HHN&T 484 MULBERRY ST, STE 265 MACON, GA 31201	LANDFILL LINER	60 - HDP[E TX	244,891	11/14/06	P. ELLIOTT
	VIRGINIA VILLATORO	MICHAEL STUBBS		GEOCOMP	244,891		
	478-945-6713	478-743-7175					
EAGLE POINT LANDFILL CELL 7 BALL GROUND, GA	FEDERAL ROAD, LLC 9995 GATE PARKWAY, SUITE 200 JACKSONVILLE, FL 32246	HHN&T 484 MULBERRY ST, SUITE 265 MACON, GA 31201	LANDFILL LINER	60 HDT	512,090	10/12/06	P. ELLIOTT
	JEFF PALUTIS	MICHAEL STUBBS		GEOCOMP	512,090		
	678-341-7140	478-743-7175					
DUKE ENERGY - RESIDUE LANDFILL BELEWS CREEK, NC	DUKE POWER 3195 PINEHALL ROAD BELEWS CREEK, NC 27009	SHAW CONSTRUCTORS 3195 PINE HALL ROAD BELEWS CREEK, NC 27009	LANDFILL LINER	60 - HDPE TX	413,500	6/19/07	P. ELLIOTT
				60 - HDPE SM	602,000		
				40 - HDPE TX	79,100		
	FRED BROWN	STIG ERIKSSON		R-GCL	413,500		
	704-601-4290			U-GCL	602,000		
				GEOCOMP	995,500		

PROJECT NAME/LOCATION	OWNER/CUSTOMER	ENGINEER	PROJECT TYPE	MIL/TYPE	SQ. FT. INST.	COMP. DATE	PROJECT MGR.
EQUITY GROUP CAMILLA, GA	EQUITY GROUP - GA DIVISION 7220 HWY 19 CAMILLA, GA 31730 LARRY RICHARDSON 229-430-1568		FLOATING COVER	100 HDPE	244,900	5/30/07	L. HICE
AMERICAN PROTEIN AERATION POND LINER CUTHBERT, GA	AMERICAN PROTEIN HWY 82 EAST CUTHBERT, GA 31740 HOYT LANGFORD 229-732-2114		LAGOON LINER	60 HDPE	221,200	9/3/07	L. HICE
				GEOCOMP	221,200		
CARGILL PORK, LLC MORRILTON, AR	CARGILL - SANDY RIVER FARM 171 SANDY ROAD MORRILTON, AR 72110 TODD RISIUS 479-968-4560 (X241)		FLOATING COVER	60 - HDPE	243,960	10/22/07	P. ELLIOTT
				80 - HDPE	7,710		
				100 - HDPE	40,426		
SANDERSON FARMS FLOATING COVER WACO, TX	SANDERSON FARMS, INC. 710 N. 64TH STREET WACO, TX 76710 JAMES EVANS 601-649-4030 (1417)	CHAS N. CLARK ASSOC. 714 HILLCREST DRIVE LAUREL, MS39440 JEFFERY GRAVES 601-649-5900	FLOATING COVER	100 - HDPE	216,000	9/20/07	L. HICE
S. WAKE LANDFILL PHASE 1A HOLLY SPRINGS, NC	WASTE INDUSTRIES, INC. 3301 BENSON DRIVE, SUITE 601 RALEIGH, NC 27609 ED MARTIN 252-536-2660	RSG&A. 425 N. BOYLAN AVE. RALEIGH, NC 27603 STACEY SMITH 919-828-0577	LANDFILL LINER	60 - HDPE TX	1,161,500	11/14/07	P. ELLIOTT
				GEOCOMP.	1,148,000		
SEVIER COUNTY LANDFILL SEVIERVILLE, TN	SEVIER SOLID WASTE, INC. PO BOX 4520 SEVIERVILLE, TN 37864 KEVIN ALLEY 865-453-2809	DRAPER ADEN ASSOCIATES 2206 SOUTH MAIN STREET BLACKSBURG, VA 24060 MICHAEL CAVELL 540-552-0444	LANDFILL LINER	60 - HDPE TX	236,500	8/20/07	P. ELLIOTT
				R - GCL	236,500		
				GEOT.	236,500		
AMERICAN PROTEIN CUMMING, GA	AMERICAN PROTEIN 4990 LELEAND DRIVE CUMMING, GA 30041 KEVIN MILFORD 770-887-6148		MATERIAL SUPPLY	60 - HDPE	200,000	11/20/07	L. HICE
				GEOCOMP	200,000		
				GEOTEX.	110,000		
AMERICAN PROTEIN HANCEVILLE, AL	AMERICAN PROTEIN, INC. PO BOX 429 HANCEVILLE, AL 35077 HANS VOS 256-352-9821 (172)		LAGOON LINER	60 - HDPE	315,578	12/31/07	L. HICE
				GEOCOMP	315,578		
				GEOT.	111,600		

PROJECT NAME/LOCATION	OWNER/CUSTOMER	ENGINEER	PROJECT TYPE	MIL/TYPE	SQ. FT. INST.	COMP. DATE	PROJECT MGR.
PLUM POINT ENERGY STATION INDUSTRIAL LANDFILL CELL 1 OSCEOLA, AR	DYNERGY SERVICES PLUM POINT PO BOX 367 SHAWN GRAY 662-837-4330	TERRACON 11400 WEST BASELINE ROAD LITTLE ROCK, AR 72209 KEN BOWN 501-455-2199	LANDFILL LINER	60 - HDT	705,000	8/19/08	P. ELLIOTT
BI-COUNTY LANDFILL CLASS I BALEFILL EXPANSION WOODLAWN, TN	BI-COUNTY SWM PO BOX 1112 CLARKSVILLE, TN 37041 MARK NEBLETT 931-553-5190	ENSAFE 220 ATHENS WAY NASHVILLE, TN 37228 TOM GREEN 615-255-9300	LANDFILL LINER	60 MIL HD	322,500	7/11/08	P. ELLIOTT
GEORGIA POWER - PLANT BOWEN GYPSUM DEWATERING CELLS CARTERSVILLE, GA	GP - PLANT BOWEN 317 COVERED BRIDGE ROAD CARTERSVILLE, GA 31020 BROOKS LEWIS 770-834-4681		LAGOON LINER	60 HDT	754,050	6/18/08	P. ELLIOTT
LAMAR COUNTY LANDFILL CELLS 3 & 4 BARNESVILLE, GA	LAMAR COUNTY SWA 172 ROGER BROWN DRIVE BARNESVILLE, GA 30204 CHARLES LANCE 478-862-5238	HARBIN ENGINEERING 1660 OLD ATLANTA HIGHWAY FORSYTH, GA 31029 STEVE HARBIN 478-992-9122	LANDFILL LINER	60 MIL HD 60 MIL HDT GEOCOMP	407,196 152,594 574,262	9/1/08	P. ELLIOTT
FLAT TOP LANDFILL FLAT TOP, AL	GREEN MOUNTAIN MANAGEMENT, LLC PO BOX 76 JACK GRAY 205-300-0220	CDG ENGINEERS & ASSOCIATES, INC. PO BOX 278 DANIEL WELLS 334-22-9431	LANDFILL LINER	60 HDT GCL GEOCOMP. RAIN COVER	446,080 446,080 446,080 446,080	10/29/08	P. ELLIOTT
ATMORE WWTP ATMORE, AL	CITY OF ATMORE WWTP 369 E. AVE. ATMORE, AL 36502 JOSH MOON 7066431524		LAGOON LINER	40 - HDPE	234,100	3/28/08	P. ELLIOTT
MORRILTON LANDFILL MORRILTON, AR	CITY OF MORRILTON 210 N. MOOSE MORRILTON, AR 72110 PAUL CRAWFORD 501-225-7779	FTN ASSOCIATES, LTD. 3 INNWOOD CIRCLE, SUITE 220 LITTLE ROCK, AR 72211 PAUL CRAWFORD 501-225-7779	LANDFILL LINER	60 - HDPE 60 - HDT	213,036 15,219	11/13/08	P. ELLIOTT
DUKE ENERGY ASH LANDFILL BELMONT, NC	ALLEN STEAM STN. 523 PLANT ALLEN ROAD BELMONT, NC 28012 FRED BROWN 704-601-4290	ALSOM ENGINEERING 9201 E. DRY CREEK ROAD CENTENNIAL, CO 80112	LANDFILL LINER	60 MIL HDT GCL GECOMP. RAIN COVER	1,091,073 543,660 1,091,073 307,960	5/20/09	P. ELLIOTT

PROJECT NAME/LOCATION	OWNER/CUSTOMER	ENGINEER	PROJECT TYPE	MIL/TYPE	SQ. FT. INST.	COMP. DATE	PROJECT MGR.
ALABAMA POWER - PLANT BARRY GYPSUM DEWATERING CELLS BUCKS, AL	AL. POWER - PLANT BARRY 1500 HWY 43 N. BUCKS, AL 36512	SOUTHERN CO. ENG. & CONST. SERVICES	LAGOON LINER	60 - HDT 60 - HDPE	1,414,600 253,700	5/23/10	P. ELLIOTT
	BROOKS LEWIS			GCL	55,000		
	770-834-4681			SGL -	804,500		
DUKE ENERGY ASH LANDFILL BELMONT, NC	ALLEN STEAM STN. 523 PLANT ALLEN ROAD BELMONT, NC 28012	S&ME 9751 SOUTHERN PINE BLVD. CHARLOTTE, NC 28273	LANDFILL LINER	60 MIL HDT	1,214,258	5/9/10	P. ELLIOTT
	MARK LEGRAND	KENNETH DALY		GCL	605,247		
	704-601-4290 (228)	704-523-4726		GECOMP.	1,214,258		
				RAIN COVER	287,763		
ENVIRONMENTAL WASTE SOLUTIONS CAMDEN, TN	ENV. WASTE SOLUTIONS 4521 TROUSDALE DR. NASHVILLE, TN 37204	CIVIL & ENVIRONMENTAL CONS. 405 DUKE DRIVE, SUITE 270 FRANKLIN, TN 37067	LANDFILL LINER	60 - HDT	255,770	12/5/09	P. ELLIOTT
	TERRY PEFANIS	JO HOUSE		GCL	236,200		
	615-333-5989	615-333-7797		DBL-	47,400		
				10 OZ GEOT.	179,000		
WHITE COUNTY LANDFARM OSCEOLA, AR	ARKANSAS RESOURCES MGMT, HWY 367 SOUTH SEARCY, AR 72143		LAGOON LINER	40 - HDPE	266,000	11/9/09	P. ELLIOTT
	THOMAS DICKINSON						
	501-490-1456						
HOUSTON COUNTY LANDFILL KATHLEEN, GA	HOUSTON COUNTY 200 CARL VINSON PARKWAY WARNER ROBINS, GA 31088	ATLANTIC COAST CONS, INC. 630 COLONIAL PARK DR, STE 110 ROSWELL, GA 30075	LANDFILL LINER	60 - HDT	432,600	10/16/10	P. ELLIOTT
	THOMAS SLADE/MDL. GA	ROBERT BROWN					
	912-272-6541	770-594-5998					
DECATUR COUNTY LANDFILL ATTAPULGUS, GA	DECATUR CO. BOARD OF COMMISSIONERS 203 WEST BROUGHTON STREET	HARBIN ENGINEERING, P.C. 1660 OLD ATLANTA HIGHWAY FORSYTH, GA 31029	LANDFILL LINER	60 HD	290,550	12/15/10	P. ELLIOTT
		STEVE HARBIN					
	229-465-3188	478-992-9122					
NORTH BALDWIN UTILITIES BAY MINETTE, AL	NORTH BALDWIN UTILITIES 25 HAND AVE BAY MINETTE, AL 36507	CH2MHILL, INC. 3011 S.W. WILLISTON ROAD GAINESVILLE, FL 32608	LAGOON LINER	60 HDWT	289,000	12/24/10	P. ELLIOTT
	JOHN JENKS	DAVID STEJSKAL					
	251-937-9545	352-335-5877					
GEORGETOWN COUNTY LANDFILL PHASE 3 EXPANSION GEORGETOWN, SC	GEORGETOWN COUNTY SOUTH CAROLINA PO DRAWER 4212470	GARRETT & M,OORE 1258 BENSON ROAD GARNER, NC 27529	LANDFILL LINER	60 HDT	382,693	3/26/11	P. ELLIOTT
	MARK LEGRAND	STEVE NICHTING		GEOCOMP	382,693		
	704-601-4290	919-792-1905					

PROJECT NAME/LOCATION	OWNER/CUSTOMER	ENGINEER	PROJECT TYPE	MIL/TYPE	SQ. FT. INST.	COMP. DATE	PROJECT MGR.
GLENN SPRINGS HOLDINGS, INC. COLUMBIA, TN	GLENN SPRINGS HOLDINGS, INC. 970 NEW HIGHWAY 7 COLUMBIA, TN 38401		LANDFILL CAP LINER	40 LLDPT	481,200	11/10/10	P. ELLIOTT
	RON MABRY			GEOCOMP	481,200		
	931-381-4614						

Plastic Fusion Fabricators, Inc.
3455 Stanwood Boulevard Huntsville, Alabama 35811
1-800-356-1480 (256)852-0378 (252)852-0388 Fax

Quality Assurance / Quality Control Manual For The Installation Of Flexible Membrane Lining Systems

04/09 DT

INTRODUCTION

1.1 Terms of Reference

1.1.1 Purpose

This manual addresses the quality assurance and quality control procedures for the installation of flexible membrane liners used by Plastic Fusion Fabricators (PFF) in landfills, surface impoundments and other installations as specified by the owner and/or engineer.

1.1.2 Quality Control

In the context of this manual, quality assurance and quality control are defined as follows:

Quality Assurance – A planned and systematic pattern of all means and actions designed to provide adequate confidence that items or services meet contractual and regulatory requirements and will perform satisfactorily in service.

Quality Control – Those actions that provide a means to measure and regulate the characteristics of an item or service to contractual and regulatory requirements.

In the context of liner production and installation:

Quality assurance refers to means and actions employed by Plastic Fusion Fabricators and the geomembrane manufacturer to assure conformity of the lining system production and installation with the Quality Assurance Plan, drawings and specifications.

Quality control refers to those actions taken by the Manufacturer, Fabricator and Installer to ensure that the materials and the workmanship meet the requirements of the plans and specifications.

1.1.3 Lining Materials

The materials comprising the lining system include geomembranes, bentonite blankets, geotextiles and geonets manufactured from synthetic polymers.

For purposes of this document, the term “geomembrane” is applied to flexible membrane liners. More specifically “geomembrane” refers to polyethylene geomembranes, with either smooth surface or textured surface for increased friction. These geomembranes include 1) high density polyethylene (HDPE) membranes which are made from resins with specific gravity greater than 0.935 and 2) linear low density polyethylene (LLDPE) membranes which are made from resins with specific gravity between 0.89 and 0.91 prior to the addition of carbon black and additives.

The geomembranes are utilized either alone or in conjunction with low permeability soils and/or bentonite blankets as composite liners. Geomembranes are the key components of the lining system and, therefore, none of the geomembrane requirements contained herein should be compromised in any way. Geotextiles, geonets and granular soils are utilized in combination for leachate collection systems.

The quality assurance of a geomembrane liner system installation is addressed herein in its entirety. Quality assurance of soils is only discussed relative to their interaction with the geosynthetics.

1.1.4 Scope of Quality Assurance and Quality Control

The scope of this manual includes the quality assurance applicable to shipment, handling and installation of geomembrane liners. In particular, full time quality assurance of the installation of geomembranes is essential.

This manual does not address design guidelines, installation specifications or selection of geomembranes, bentonite blankets and other geosynthetics (which includes compatibility between geosynthetic and contained material).

This manual does not address the quality assurance of soils, except in cases where soil placement may have an influence on the geosynthetics.

1.1.5 Units

In this manual all properties and dimensions are expressed in U.S. units, with “equivalent” SI units in parentheses. It should be noted that the conversion is typically only accurate within ten percent. In cases of conflict or clarification the U.S. units shall be deemed to govern.

1.1.6 References

The manual includes references to test procedures of the American Society for Testing and Materials (ASTM), the Federal Test Method Standards (FTMS). Recognizing the changing nature of the above standards and the geosynthetic industry at large, this manual is subject to periodic revision.

1.2 Parties

The completion of a particular lined system is dependent on the interaction of many parties. The parties discussed below are those associated with the ownership, design, specification, manufacture, fabrication, transportation, installation and quality assurance of the liner system. The qualifications of the Installer and Geosynthetic Quality Assurance Consultant (CQAC) are particularly critical to the successful completion of the lining systems and must be emphasized in the Quality Assurance Plans.

1.2.1 Designer

The Designer is responsible for the design, drawings, plans and specifications of the lining system.

1.2.2 Earthwork Contractor

The Earthwork contractor is responsible for the preparation of the supporting soil on which the lining system is to be installed and may also be the party responsible for placing earth and granular materials (if any) over the installed lining system.

1.2.3 Resin Supplier

The resin supplier produces and delivers the resin to the Manufacturer.

1.2.4 Geomembrane Manufacturer

The Geomembrane Manufacturer is responsible for the production of geomembrane rolls from resin.

1.2.5 Installer (PFF)

The installer is responsible for field handling, placing, seaming, field testing, temporary loading (against wind) and other aspects of the geosynthetics installation.

1.2.6 Transporter

The transporter transports the rolls of geomembrane between the manufacturer and the site.

1.2.7 Geosynthetic Quality Assurance Consultant

The Geosynthetic Quality Assurance Consultant is normally a party, independent from the Owner, Manufacturer, Fabricator and Installer that is responsible for observing, testing and documenting activities related to the quality assurance of the geosynthetics installation at the site. He is also responsible for issuing a certification report.

1.2.8 Geosynthetic Quality Assurance Laboratory

The Geosynthetic Quality Assurance Laboratory is a party responsible for conducting tests on samples of geosynthetics.

1.2.9 Owner

The Owner owns and/or is responsible for the lined facility. In this manual the term “Owner” shall apply equally to “Operator”; i.e.: the party responsible for operating the lined facility.

1.2.10 Project Manager

The Project Manger is the official representative of the owner. In this manual the term “Project Manager” shall apply equally to “Construction Coordinator”; i.e.: the individual in charge of coordinating field activities.

1.3 Meetings and Visits

To guarantee a high degree of quality during installation, open channels of communication are essential. To that end, meetings are critical.

1.3.1 Pre-Construction Meeting

Following the completion of the design, plans and specifications for the project, a Pre-Construction Meeting may be held. This meeting should include all parties involved, including the Owner, PFF, the
Geosynthetic Quality Assurance Consultant, the Design Engineer and the Project Manager.

The purpose of this meeting is to begin planning for coordination of tasks, anticipate any problems which might cause difficulties and delays in construction and, above all, present the Geosynthetic Quality Assurance Plan to all the parties involved. It is very important that the rules regarding testing, repair, etc. be known and accepted by all.

This meeting should include (but not be limited to) all of the following activities:

Communicate to all parties any relevant documents;

Review critical design details of the project;
If a panel layout drawing is required by Specifications it should be reviewed at this meeting; (Panel layout is tentative and may be revised by PFF site manager with the approval of the field engineer to suit field conditions at the time of installation).

Review the Geosynthetic Quality Assurance Manual and make any appropriate modifications;

Make any appropriate modifications to the design specifications or performance standards can be determined through the implementation of the site-specific addendum;

Reach a consensus on the quality control procedures, especially on methods of determining acceptability of the lining system;

Establish lines of authority and communication;

Prepare a time schedule for all operations;

Review the responsibilities of each party;

Review methods for documenting and reporting and for distributing documents and reports;

Establish rules for writing on the geomembrane; i.e.: who is authorized to write, what can be written and in which color;

Outline procedures for packing and storing archive samples;

Conduct a site walk around to verify that earthwork construction is proceeding on schedule and to review material storage locations;

Develop a numbering system for Panels and Seams;

Finalize field cutout sample sizes;

Review seam-testing procedures;

Review repair procedures;

Review precautions to be taken against clay cracking (surface desiccation).

Discuss any other site specific items pertinent to the lining installation.

A person designated at the beginning of the meeting shall document the meeting and minutes shall be transmitted to all parties.

1.3.2 Progress Meetings

A daily or weekly progress meeting shall be held between the Earthwork Manager, PFF, the Project Manager, and any other concerned parties. This meeting shall discuss current progress. Any matter requiring action, which is raised in this meeting, shall be reported to the appropriate parties in writing.

1.3.3 Manufacturing Plant Visits

A representative of the Owner or his designated alternate may carry out a geomembrane manufacturing plant visit if he so chooses.

GEOMEMBRANE MANUFACTURING AND DELIVERY

2.1 Manufacturing

2.1.1 Geomembrane Manufacturing

PFF shall provide the Project Manager/Owner with the following:

A properties sheet including, at a minimum, all specified properties measured using test methods indicated in the specifications, or equivalent;

The Owner or Owner's Representative shall verify that:

The property values certified by the Geomembrane Manufacturer meet all of the specifications; and

The measurements of properties by the Geomembrane Manufacturer are properly documented, and that the test methods used are acceptable.

2.1.2 Rolls

After receipt of material, PFF shall provide the Project Manager with one quality control certificate for every roll of geomembrane provided. The quality control certificate shall be signed by the Manufacturer and include the results of the quality control tests performed by the Manufacturer. The quality control certificate shall include the resin information including origin (supplier's name), identification (brand name, lot number) and production date. A resin certificate for each lot used in production of the geomembrane shall also be provided to the Project Manager.

2.1.1 Delivery

2.2.1 Transportation and Handling

PFF or the Manufacturer will provide transportation of the geomembrane through an independent trucking company. If the geomembrane arrives on site prior to project personnel, the customer or contractor is responsible for off-loading rolls. The geomembrane should be placed on a smooth well drained surface, free of rocks or any other protrusions which may damage the material. No special covering is necessary for protection of the geomembrane from sunlight or rain.

The following should be verified prior to off-loading either geomembrane:

Handling equipment used on the site is adequate and does not pose any risk of damage to the geomembrane; and

Personnel will handle the geomembrane with care.

Any welding rod delivered to the site prior to PFF arriving should be kept covered and dry or placed in a storage facility.

Upon arrival at the site, PFF shall conduct a surface observation of all rolls for defects and for damage. This inspection shall be conducted without unrolling rolls unless defects or damages are found or suspected. PFF shall indicate any damage to the Project Manager.

2.2.2 Storage

The Project Manager shall provide storage space in a location (or several locations) such that on-site transportation and handling are minimized. Storage space should be protected from theft, vandalism, passage of vehicles and be adjacent to the area to be lined.

GEOMEMBRANE INSTALLATION

3.1 Anchor Trench Systems

All Anchor Trench Systems shall be excavated by the Earthwork Contractor (unless otherwise specified) to the lines and widths shown on the design drawings, prior to

geomembrane placement. No large rocks or clay lumps shall be allowed to underlie the geomembrane in the anchor trench.

Backfilling of the anchor trench shall be conducted in accordance with Section3.5.

3.2 Geosynthetic Placement

Immediately prior to installation of either of the designed geomembrane liners, PFF and the owner or the owner's representative shall observe the surface. The decision to repair cracks, if any, shall be made only by the Project Manager. PFF and the Project Manager for joint approval shall walk the subgrade. PFF will sign acceptance of the surface condition of the subgrade. The integrity of the underlying soil is the responsibility of the owner/earth work contractor.

<u>Subgrade Preparation Recommendations</u>

No liner shall be placed on surfaces not previously found acceptable by the PFF supervisor or his agent.

No sharp stones or other hard objects that could penetrate the liner shall be present in the top 1 inch of the surfaces to be covered.

Surfaces to be lined shall be smooth and free of all rocks, sharp stones, sticks, roots, sharp objects, or debris of any kind. The surface should provide a firm, unyielding foundation for the geosynthetic with no sudden, sharp or abrupt changes or break in grade.

3.2.1 Field Panel Identification

A field panel is the unit area of geomembrane, which is to be seamed in the field; i.e.: a field panel is a roll or a portion of roll cut in the field.

At the time of installation, the PFF Field Supervisor shall give each field panel an "identification code" (number or letter/number). The Project Manager shall agree upon this identification code. This field panel identification code shall be as simple and logical as possible.

3.2.2 Field Panel Placement

3.2.2.1 Location

Field panels are located by the PFF Field Supervisor in a manner consistent with the Specification and best suited to existing site conditions.

3.2.2.2 Installation Schedule

Field panels are placed one at a time, and each field panel is seamed immediately after its placement (in order to minimize the number of unseamed field panels). PFF shall record the identification code, location and date of installation of each geomembrane field panel.

3.2.2.3 Weather Conditions

Neither welding nor bentonite blanket placement shall take place during any precipitation or in the presence of excessive moisture, blowing dust, or in the presence of excessive winds (unless wind barriers are provided). In addition, welding shall not take place in areas of ponded water.

3.2.2.4 Method of Placement

PFF shall verify the following:

Any equipment used does not damage the geomembrane by handling, trafficking, excessive heat, leakage or hydrocarbons or other means;

The prepared surface underlying the geomembrane has not deteriorated since previous acceptance and is still acceptable immediately prior to geosynthetic placement;

Any geosynthetic elements immediately underlying the geomembrane are clean and free of debris;

All personnel working on the geomembrane should not smoke, wear damaging shoes, or engage in other activities which could damage the geomembrane;

The method used to unroll the panels does not cause crimps in the geomembrane and does not damage the supporting soil;

The method used to place the panels minimizes wrinkles (especially differential wrinkles between adjacent panels);

Adequate temporary loading and/or anchoring (e.g.; sand bags, tires), not likely to damage the geomembrane, has been placed to prevent uplift by wind (in case of high winds, continuous loading, e.g. by adjacent sand bags, or soil is recommended along edges of panels to minimize risk of wind flow under the panels);

PFF shall inform the Project Manager if the above conditions are not fulfilled.

3.2.2.5 Damage

PFF shall inspect each geosynthetic after placement and geomembrane prior to seaming for damage. PFF shall advise the Project Manager which geosynthetic or portions of geosynthetic should be repaired or accepted. Damaged geosynthetic or portions of damaged geosynthetics, which have been rejected, shall be marked and their removal from the work are recorded by PFF. Repairs to geomembrane shall be made according to procedures described in Section 3.4.

3.3 Field Seaming

3.3.1 Seam Layout

In general, seams should be oriented parallel to the line of maximum slope; i.e.: oriented along, not across, the slope. In corners and odd-shaped locations, the number of seams should be minimized. No horizontal seam should be less than 2 feet (1.5m) from the toe of the slope or areas of potential stress concentrations unless otherwise authorized. When full roll lengths do not extend past the toe of slope, panel ends may be seamed provided the panel end is cut at an angle greater than or equal to 45 degrees.

A seam numbering system compatible with a panel numbering system shall be agreed upon at the Resolution and/or Pre-Construction Meeting.

3.3.1.1 Field joints shall be made by overlapping adjacent sheets 4 inches for hot wedge welding.

3.3.1.2 Polyethylene pipe sleeves shall be used for pipe sleeves penetrating through the lined area. When the pipe composition is polyethylene the sleeve should be extrusion welded directly to the pipe if space permits. For dissimilar materials, the sleeve should be fastened by mechanical means and sealant applied between the pipe and sleeve.

3.3.2 Seaming Equipment and Products

The approved processes for field seaming are extrusion welding and fusion (hot wedge) welding. Proposed alternate processes shall be documented and submitted to the Owner or his representative for his approval.

The extrusion welding apparatus shall be equipped with gauges giving the temperature of the apparatus at the nozzle and extruder barrel.

The fusion-welding apparatus must be an automated vehicular mounted device, which produces a double seam with an enclosed space or solid seam on thin mil material as specified.

The fusion welding apparatus shall be equipped with gauges giving the applicable temperatures.

PFF shall verify that:

Equipment used for seaming is not likely to damage geomembrane;

The extrusion welder is purged prior to beginning a seam until all heat-degraded extrudate has been removed from the barrel;

The electric generator is equipped such that no damage occurs to the geomembrane;

Buffing shall be completed no more than one (1) hour prior to extrusion welding (buffing is not necessary for hot wedge welding);

The geomembrane is protected from damage in heavily trafficked areas.

3.3.3 Seam Preparations

PFF shall verify that:

Prior to seaming the seam area is clean and free of moisture, dust, dirt, debris of any kind and foreign material;

Seams are aligned with the fewest possible number of wrinkles and “fishmouths”.

3.3.4 Weather Conditions for Seaming

The normally required weather conditions for seaming are as follows:

The high temperature limit for welding is the temperature at which one or all of the following takes place:

- the well-being of the crew becomes uncertain
- air pressure channels begin to close
- passing welds are unobtainable

Unless authorized in writing by the Project Manager, no seaming shall be attempted at ambient temperatures below 35 degrees Fahrenheit. This decision is based upon the ability of the crew to obtain passing trial and field welds.

In all cases the geomembrane shall be dry and protected from wind.

3.3.5 Trial Seams

Trial seams shall be made on fragment pieces of geomembrane liner to verify that seaming conditions are adequate. Such trial seams shall be made at the beginning of each seaming period (start of day, midday and anytime equipment is turned off and allowed to cool down) for each seaming apparatus used. Trial seams shall be made under the same conditions as actual seams.

The trial seam sample shall be approximately 3 feet (1.0m) long by 1 foot (0.3) wide (after seaming) with the seam centered lengthwise. Seam overlap shall be nominally 4 inches with 3 inches minimum.

Two adjoining specimens each 1 inch (25 mm) wide shall be cut from the trial seam sample by the installer. The specimens shall be tested respectively in shear and peel using a field tensometer and they should not fail in the seam. If the additional specimen fails, the entire operation shall be repeated. If the additional specimen fails the seaming apparatus and seamer shall not be accepted and shall not be used for seaming until the deficiencies are corrected and two consecutive successful full trial welds are achieved.

3.3.6 General Seaming Procedures

Unless otherwise specified, the general seaming procedure used by PFF shall be as follows:

Approximately four (4) inches (100mm) for fusion welding and three (3) inches (75mm) for extrusion welding shall overlap the rolls of membrane.

“Fishmouths” or wrinkles at the seam overlaps shall be cut along the ridge of the wrinkle in order to achieve a first overlap. The cut “fishmouths” or wrinkles shall be seamed and any portion where the overlap is inadequate shall then be patched with an oval or round patch of the same geomembrane extending a minimum of 6 inches beyond the cut in all directions.

All seaming shall be performed through the anchor trench.

All “T” seams at fusion welded panel intersections shall be performed using the methods shown per the details shown on PFF-0112A and PFF-0112B attached.

For fusion welding on wet or mud subgrade a protective layer of plastic may be required that is placed directly below the overlapped membranes being seamed. This is to prevent any moisture buildup between the sheet to be welded and/or to provide a consistent rate of speed for the wedge-welding device.

3.3.7 Nondestructive Seam Continuity Testing

3.3.7.1 Concept

PFF shall nondestructively test all field seams over their full length using a vacuum test unit, air pressure testing or other approved method. (Vacuum testing is described in section 3.3.7.2 and air pressure testing is described in section 3.3.7.3). The purpose of nondestructive tests is to check the continuity of seams. It does not provide information on seam strength. Continuity testing shall be carried out as the seaming work progresses, not at the completion of all field seaming. Spark testing, as described in section 3.3.7.5, is an alternate method of nondestructive testing that is used in corners, around penetrations and other areas where vacuum testing or air pressure testing cannot be performed.

3.3.7.2 Vacuum Testing

The equipment shall be comprised of the following:

A vacuum box assembly consisting of a rigid housing, a transparent viewing window and a soft neoprene gasket attached to the bottom;

A steel vacuum tank and pump assembly equipped with a pressure controller gauge to indicate chamber vacuum and pipe connections;

A rubber pressure/vacuum hose with fittings and connections;

A bucket and wide brush, mop or spray assembly;

A soapy solution;

The following procedures shall be followed:

Energize the vacuum pump and reduce the tank pressure to approximately 5-psi (10 inches of HG);

Wet a strip of geomembrane approximately 12 inches by 48 inches (0.3 m by 1.2m) with the soapy solution;

Place the box over the wetted area;

Close the bleed valve and open the vacuum valve;

Ensure that a leak-tight seal is created;

For a period of approximately 5 to 10 seconds, close the vacuum valve and open the bleed valve, move the box over the next adjoining area with a minimum 3 inches (75 mm) overlap and repeat the process;

All areas where soap bubbles appear shall be marked and repaired in accordance with Section 3.4.

3.3.7.3 Pressure Test Specifications For Dual Track Hot Wedge Welds

Test Pressure (after 5 min) PSI max pressure

Sheet Thickness	Min	Max	Drop Allowed
30 mil	24	30	5 psi
40 mil	24	30	5 psi
60 mil	27	30	3 psi
80 mil	27	30	3 psi
100 mil and thicker	30	32	2 psi

3.3.7.4 Air Pressure Testing (For Double Fusion Seam Only)

The equipment shall be comprised of the following;

An air pump (manual or motor driven) equipped with pressure gauge capable of generating and sustaining a minimum pressure of 25 psi (160kPa);

A rubber hose with fittings and connections;

A sharp hollow needle or other approved pressure feed device

The following procedures shall be followed:

Seal both ends of the seam to be tested;

Insert needle or other approved pressure fed device into the tunnel created by the fusion weld;

Energize the air pump to a minimum pressure of 25-psi (160 kPa), close valve and sustain pressure approximately five minuets;

If loss of pressure exceeds above listed values or does not stabilize, locate faulty area and repair in accordance with Section 3.4;

Remove needle or other approved pressure fed device and seal.

3.3.7.5 Spark Testing

The equipment shall be comprised of the following:

A high-frequency spark generator capable of producing a 12,000 to 30,000 volt spark (similar to an Electro-Technic, Model BD-50);

Metallic foil spark tape (adhesive backed);

The procedures are as follows:

Place the adhesive backed foil tape continuously along the edge on the mating side of the HDPE liner to be welded. It shall be placed no greater than 1” from edge (see “Typical Extrusion Weld Detail”);

Position and weld materials per section 3.3.6;

When welding is complete, set spark generator to maximum voltage. Position the spark generator electrode above the middle of the extrusion weld at a distance where a consistent spark is achieved. The spark should be bluish in color and a slight humming sound will be heard from the generator.

Continue along the weld slowly observing any change in the characteristics of the spark. Any defect detected in the weld will cause the spark to become white in appearance and be accompanied by an intense cracking sound;

If a defect is found, mark for repairs (see Section 3.4.3 for repair procedures).

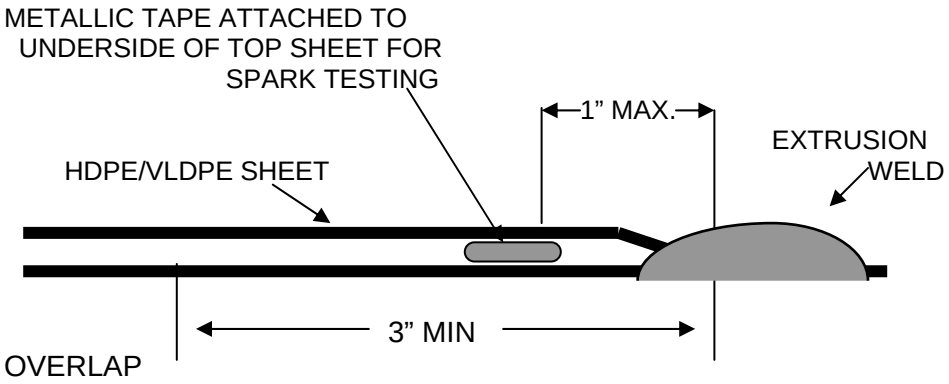

TYPICAL EXTRUSION WELD DETAIL

3.3.8 Destructive Testing

3.3.8.1 Concept

Destructive seam tests shall be performed at random selected locations. The purpose of these tests is to check that welds are fully integrated with each other and to evaluate seam strength. Seam strength testing shall be done as the seaming work progresses, not at the completion of all field seaming.

3.3.8.2 Location and Frequency

The owner and/or owner's representative shall select locations where seam samples will be cut. These locations shall be established as follows:

> A frequency shall be agreed upon by PFF and the Project Manager at the Resolution and/or Pre-Construction meeting at intervals not to exceed one sample for every 500 linear feet of weld.

The seaming technician shall not be informed in advance of the locations where the seam samples will be taken.

3.3.8.3 Sampling Procedures

Samples shall be cut by PFF as the seaming progresses in order to have test results before the geomembrane is covered by another material and to insure that there are no problems with the welding apparatus.

Each sample shall be assigned a number and the sample location shall be recorded for future reference.

All holes in the geomembrane resulting from destructive seam sampling shall be repaired in accordance with repair procedures described in Section 3.4. The continuity of the new seams in the repaired area shall be tested according to Section 3.3.7.

3.3.8.4 Size of Samples

At a given sampling location the Installer shall take two types of samples.

First, two sample coupons for field-testing should be taken. Each of these sample coupons shall be 1 inch (0.25 mm) wide by 12 inches (0.3 m) long with the seam centered parallel to the length. The distance between these two samples shall be 30 inches.

If both sample coupons pass the field test described in Section 3.3.8.5, a sample shall be cut between the two coupons. This sample shall be cut into parts and distributed as follows:

One portion to the Geosynthetic Quality Assurance Laboratory for testing if applicable, 12 inches x 12 inches (0.3 m x 0.3 m), and

One portion to the Owner for archive storage, 12 inches x 12 inches (0.3 m x 0.3 m).

Final determination of the sample sizes shall be made at the Pre-Construction Meeting.

3.3.8.5 Field Testing

The two 1 inch (25 mm) wide strips, mentioned in Section 3.3.8.4 shall be tested in the field in peel and shear and shall not fail in the seam. Shear testing applies a tensile stress from the top sheet through the weld and into the bottom sheet. Peel testing, on the other hand, peels the top sheet back against the overlapped edge of the bottom sheet in order to observe how separation occurs. If any field test sample fails to pass, then the procedures outlined in 3.3.8.6 shall be followed.

Destructive testing in the field is to be carried out using a calibrated tensiometer. All seams shall fail in film tear bond (FTB) which means that the parent material fails before the weld. Test results in shear shall be not less than 95% of the minimum tensile strength t yield for the parent material specified. Test results in peel shall be not less than 62% of the minimum tensile strengtht yield for the parent material specified.

3.3.8.6 Procedures for Destructive Test Failure

The following procedures shall apply whenever a sample fails a destructive test. PFF has two options:

1) Reconstruct the seam between any two passed test locations;

2) Trace the welding path to an intermediate location (10 feet maximum from the point of the failed test in each direction) and take a small sample coupon for an additional field test at each location. If these additional samples pass the field test, then full samples are taken. If these samples pass the tests, then the seam is reconstructed between these locations. If either sample fails, then the process is repeated to establish the zone in which the seam should be reconstructed.

All acceptable seams must be rounded by two locations from which samples passing destructive tests have been taken.

3.4 DEFECTS AND REPAIRS

3.4.1 Identification

All seams and non-seam areas of the geomembrane shall be examined by PFF for identification of defects, holes, blisters, undispersed raw materials and any sign of contamination by foreign matter.

Defective/damaged materials shall be identified and repaired per section 3.4.3.

3.4.2 Evaluation

Each suspect location, both in seam and non-seam areas, shall be nondestructively tested using the methods described in Section 3.3.7 as appropriate. Each location, which fails the non-destructive testing, shall be marked by PFF and repaired. Work shall not proceed with any materials which will cover locations which have been repaired until laboratory test results with passing values are available.

3.4.3 Repair Procedures

3.4.3.1 Geomembrane Repair Procedures

Any portion of the geomembrane failing a destructive or nondestructive test shall be repaired. Several procedures exist for the repair of these areas. The final decision as to the appropriate repair procedure shall be agreed upon between the Project Manager and PFF. The procedures available include:

Patching – to repair large holes, tears and contamination by foreign matter;
Buffing and re-welding – to repair small sections of extruded seams;
Spot welding or seaming – to repair pinholes or other minor localized flaws;
Capping – to repair large lengths of failed seams;
Topping – repair areas of inadequate seams which have an exposed edge;

In addition, the following provisions shall be satisfied:

Surfaces of the geomembrane that are to be repaired shall be abraded no more than one hour prior to the repair;
All surfaces must be clean and dry at the time of the repair;
All seaming equipment used in repairing procedures must be approved;

The repair procedures, materials and techniques shall be approved in advance of the specific repair by the Project Manger and PFF;
Patches or caps shall extend at least 6 inches beyond the edge of the defect and all corners of patches shall be rounded with a radius of at least 3 inches.

3.4.3.2. Geomembrane Verification of Repairs

Each repair shall be nondestructively tested using the methods described in Section 3.3.7 as appropriate. Repairs, which pass the nondestructive test, shall be taken as an indication of an adequate repair. Failed tests shall be redone and retested until a passing test is obtained.

3.5 Backfilling of Anchor Trench

The anchor trench, if any, shall be adequately drained by Owner/Earthwork Construction to prevent ponding or otherwise softening of the adjacent soils while the trench is open. The anchor trench shall be backfilled by the Earthwork Contractor or as outlined in the specifications and bid documents.

Since backfilling the anchor trench can affect material bridging at toe of slope, consideration should be given to backfill the liner at it's most contracted state, preferable during the cool of the morning or extended period of overcast skies. Care shall be taken when backfilling the trenches to prevent any damage to the geosynthetics.

3.6 Lining System Acceptance

The geosynthetic lining system shall be accepted when:

The installation of all materials re deployed and welded;
Verification of the adequacy of all seams and repairs including associated testing is complete.

3.7 Soil In Contact With the Geomembrane

Important points for quality assurance of soils in contact with geomembranes include:

A geotextile or other cushion approved by the designer may be installed between angular aggregate and the geomembrane.

Equipment used for placing soil shall not be driven directly on the geomembrane.

A minimum thickness of 1 foot (0.3 m) of soil is recommended between a light dozer (such as a CAT D-3 or wide track caterpillar D-6 or lighter) and he geomembrane.

In heavily trafficked areas such as access ramps, soil thickness should be at least 2 to 3 feet (0.6 – 0.9 m).

Soil/Earth Cover on top of Geomembrane

Placement of soils, sand or other types of earth cover on top of the liner shall not be performed until all destructive and on destructive testing has been performed and accepted.

Placement should be preformed to minimize wrinkles. Equipment operators should be briefed on method of placement and affects of thermal expansion and contraction of the liner.

Material placed on top of the liner should be back-dumped on liner and, in order to avoid the formation of wrinkles, efforts should be made to load the soil so that it comes down on top of the liner rather than being pushed across the sheet. This is done by 1) using a front-end loader to place soil ahead of spreading soil cover and, 2) spreading soil by building a mound at the edge of soil, then pushing soil up and over the mound causing it to come down on the liner.

If wrinkle forms, every effort should be made to walk the wrinkle out.

Minor folding over of wrinkles is acceptable providing an even transition occurs at the tail of the wrinkle. If excessive stress points re created at the tail of the wrinkle, the wrinkle should be cut out and repaired per Section 3.4.

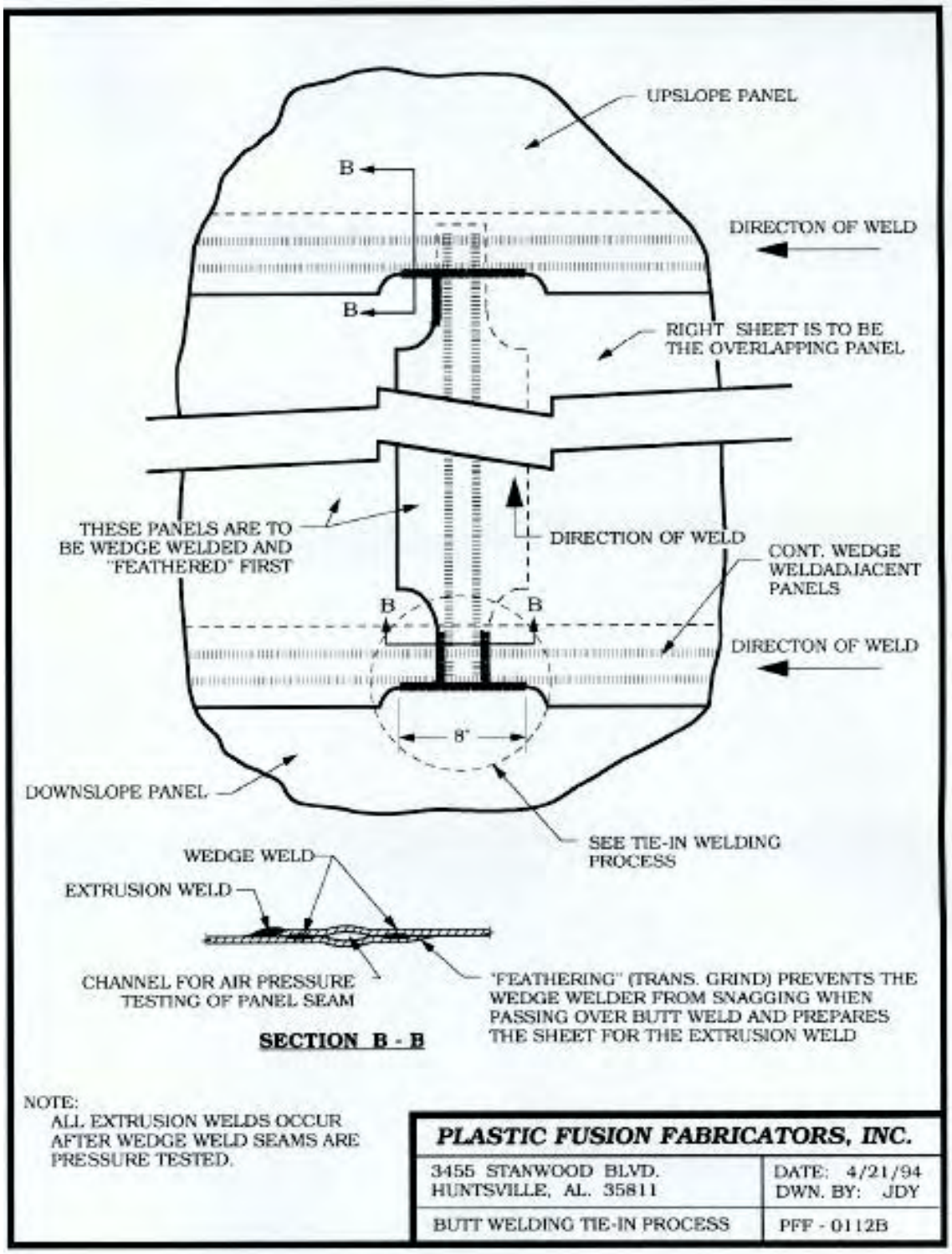
UPSLOPE PANEL
B
B
DIRECTON OF WELD
RIGHT SHEET IS TO BE THE OVERLAPPING PANEL
THESE PANELS ARE TO BE WEDGE WELDED AND "FEATHERED" FIRST
DIRECTION OF WELD
CONT. WEDGE WELDADJACENT PANELS
B
B
DIRECTON OF WELD
8"
DOWNSLOPE PANEL
SEE TIE-IN WELDING PROCESS
WEDGE WELD
EXTRUSION WELD
CHANNEL FOR AIR PRESSURE TESTING OF PANEL SEAM
"FEATHERING" (TRANS. GRIND) PREVENTS THE WEDGE WELDER FROM SNAGGING WHEN PASSING OVER BUTT WELD AND PREPARES THE SHEET FOR THE EXTRUSION WELD
SECTION B - B
NOTE:
ALL EXTRUSION WELDS OCCUR AFTER WEDGE WELD SEAMS ARE PRESSURE TESTED.
PLASTIC FUSION FABRICATORS, INC.
3455 STANWOOD BLVD.
HUNTSVILLE, AL. 35811
DATE: 4/21/94
DWN. BY: JDY
BUTT WELDING TIE-IN PROCESS
PFF - 0112B

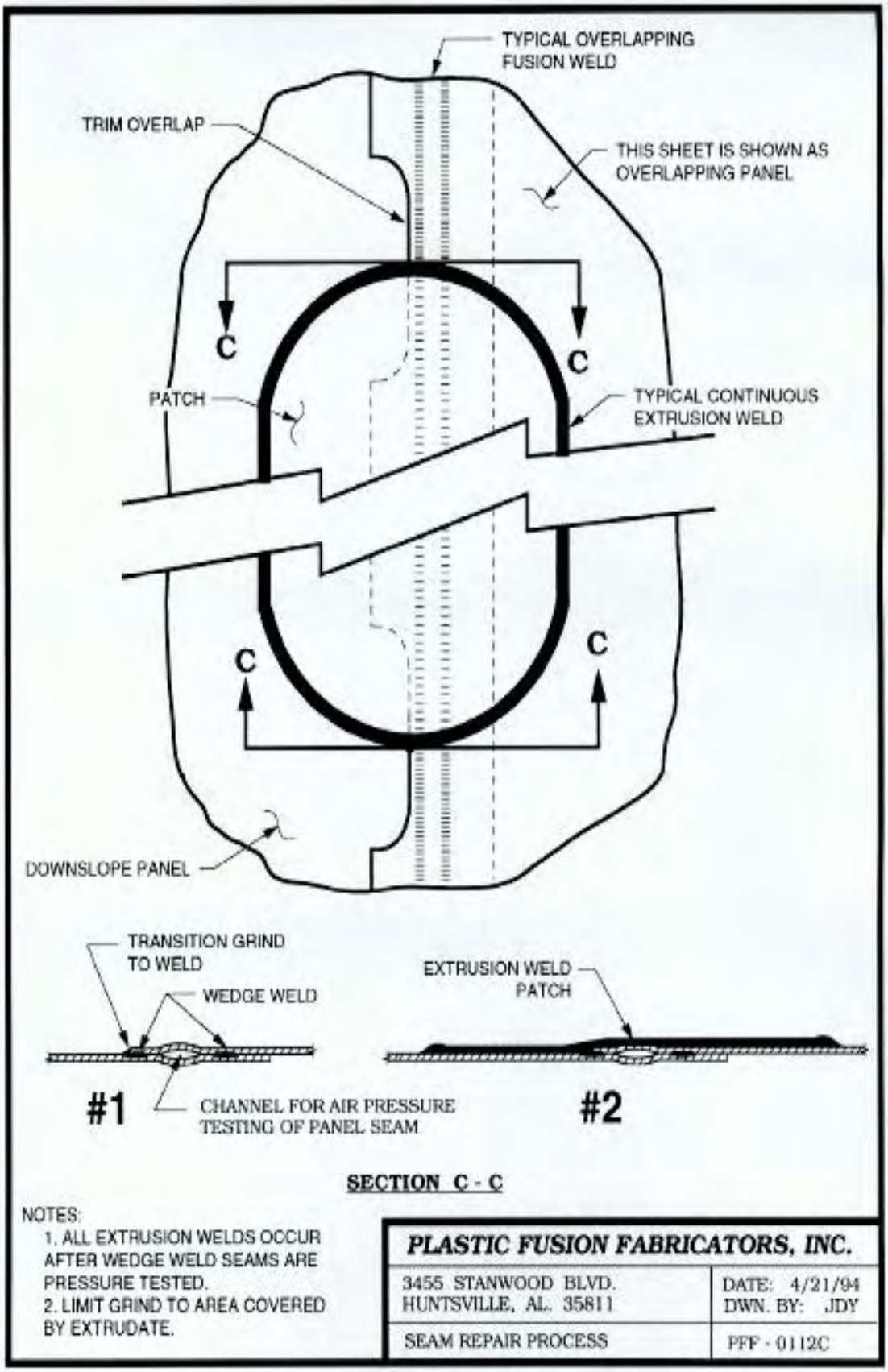
TYPICAL OVERLAPPING FUSION WELD
TRIM OVERLAP
THIS SHEET IS SHOWN AS OVERLAPPING PANEL
C
C
PATCH
TYPICAL CONTINUOUS EXTRUSION WELD
C
C
DOWNSLOPE PANEL
TRANSITION GRIND TO WELD
WEDGE WELD
EXTRUSION WELD PATCH
#1
CHANNEL FOR AIR PRESSURE TESTING OF PANEL SEAM
#2
SECTION C - C
NOTES:
1. ALL EXTRUSION WELDS OCCUR AFTER WEDGE WELD SEAMS ARE PRESSURE TESTED.
2. LIMIT GRIND TO AREA COVERED BY EXTRUDATE.
PLASTIC FUSION FABRICATORS, INC.
3455 STANWOOD BLVD.
HUNTSVILLE, AL. 35811
DATE: 4/21/94
DWN. BY: JDY
SEAM REPAIR PROCESS
PFF - 0112C

SKAPS Industries

HISTORY

SKAPS Industries is a leader in the fabrication of geosynthetic drainage products for the environmental industry in the U.S. and abroad. Through its exclusive manufacturing processes, SKAPS is able to meet the supply demands of even the largest orders and most rigorous schedules.

SKAPS began producing geonets and geocomposites in February, 1997 in Commerce, Georgia. Geonet thicknesses range from 160 mils to 330 mils. Geocomposites are laminated either single or double sided.

SKAPS operates three state-of-the-art geonet extrusion lines, seven days a week. Our staged process offers high capacity and production flexibility allowing us to service customers with special project-specific requirements without interfering with standard daily production.

SKAPS maintains strict quality control over its products using the best and latest in testing equipment and techniques. Not only do we maintain a strict QA/QC program based on GRI and ASTM procedures, we also utilize the most accurate and efficient equipment available.

SKAPS is committed to providing customers with the highest quality drainage nets and geocomposites while meeting today's stringent construction deadlines and providing exceptional customer service before and after the sale. When it comes to geonets and geocomposites, SKAPS Industries is the answer for environmental drainage control.

SKAPS INDUSTRIES, INC.

Engineered Synthetic Products, Inc.

GEONET / GEOCOMPOSITE TESTING PROCEDURES

QC Sampling Schedule

All tests are performed every 35,000 square feet of production except for compressibility and melt index, which are tested once per shift (approximately every 250,000 square feet of production). Transmissivity is done on a requested basis.

Weight / Area (ASTM D 5261)

The width is determined by measuring the sample in three places--once across each cut end and once across the center. The three measurements are then averaged and reported in inches. The length is also determined by measuring three places--along both edges and along the center. These values are averaged and reported in inches. Samples are then taken and weighed to the nearest .001 lb/sf. The weight is divided by the average width to obtain a weight per length value. The weight/length number is divided by the average width value to obtain weight per area. The value is reported in lbs/sf.

Thickness (ASTM D 5199)

Five specimens are cut from across the width of the lab sample. A thickness gauge with a ¾ inch presser foot is used to measure the thickness of each specimen. The values are recorded and reported as an average in inches.

Tensile Strength (ASTM D 5035)

Five specimens are cut from across the width of the lab sample. They are then placed in the jaws of the Instron Machine and a load is applied at a constant strain of 12 in/min until yield. The results of the tensile test are then averaged and recorded.

% Carbon Black (ASTM D 4218)

The carbon black test determines the percent by weight of the product that is carbon black. The percent of carbon black is the ratio of the residue weight after pyrolysis in a muffle furnace compared to the weight of input specimen. Two grams of the net are cut and placed in aluminum dishes. The samples are then placed in a muffle furnace for ten minutes at 600 degrees centigrade. The samples are removed and allowed to cool. The carbon black percentage is calculated and recorded.

Ply Adhesion (ASTM F 904)

Five specimens are cut from across the entire width of the composite sample, each measuring one inch wide by ten inches long. The strain rate for the test is 10 in/min. The fabric is clamped in one jaw of the Instron machine while the net is clamped in the other. The fabric is pulled away from the net to test the adhesion of the fabric to the net.

Transmissivity (ASTM D 4716)

The transmissivity test for the composite is identical to the test for the geonet.

Melt Index (ASTM D 1238)

The melt index determines the rate of the extrusion of the molten resin through a die of specified length and diameter at a temperature of 190 degrees centigrade under a load of 2.16 kg and is measured in g/10min. A sample of approximately 2.5 grams of geonet is then put through the melt plastometer to verify flow rates.

Density of Polymer (ASTM D 1505)

Taking samples from the melt index test, small strands are cut and measured in a density column. A mixture of distilled water and isopropyl alcohol is used as the suspension fluid.

Transmissivity (ASTM D 4716)

The transmissivity test measures the inplane flow of water across the net sample. In the standard test, the sample is placed between two steel plates with the water temperature at 20 degrees centigrade. Different gradients and loads are applied to the sample. The values are then calculated and converted to gallons per min/ft, or meters^2/sec. Transmissivity is not a standard manufacturing quality control test but rather a design indicator and is tested on a per project request basis.

TRANSNET

DRAINAGE NET

GEOCOMPOSITE

HANDLING AND INSTALLATION MANUAL

SKAPS INDUSTRIES, INC.

Engineered Synthetic Products, Inc.

Phone (770) 564-1857

Fax (770) 564-1818

Introduction

Geocomposites provide a solution to various drainage problems. As with any synthetic product, the quality assurance and quality control does not stop once the product is shipped from the factory. Whether the product has been specified for vertical wall hydrostatic relief or horizontal flow zones for landfill cells/closure and roadways, care in handling and installation is critical to the future functioning of the product.

TRANSNET is manufactured utilizing high quality HDPE resin and lamination of high strength to weight ratio nonwoven geotextiles. The lamination process is completed at the same location where the net is manufactured, minimizing additional handling and allowing for supply of custom lengths. TRANSNET can have one or both sides laminated in order to meet the design specification.

Manufacturing

TRANSNET is manufactured utilizing state-of-the-art counter rotating dies and the highest quality resin. TRANSNET is manufactured with the addition of carbon black to stabilize against degradation from UV exposure.

Packaging

Upon completion of the lamination process, the geocomposite will be wrapped in an opaque wrap to prevent exposure to UV and for protection from the weather, dust, etc. In the event only TRANSNET is required, shipping in a wrapper is not necessary.

Each roll will be stickered or tagged so that the following information is available at all times from the manufacturer:

- **Manufacturer's Name**
- **Product Identification**
- **Lot Number**
- **Roll Dimensions**

SKAPS INDUSTRIES, INC.
Engineered Synthetic Products, Inc.

Shipping and Storage

Geocomposite rolls will be shipped in original packaging. In the event the packaging is damaged during shipment, repairs should be made to ensure protection against UV and weather. Care should be used during the off loading to ensure that the machinery used does not penetrate packaging.

Storage of the rolls prior to installation should be in an area where they are not in standing water. For storage longer than 30 days, rolls should be elevated off the ground with tires, pallets or 2x4's to prevent water from saturating the bottom row. The stack should then be covered with a material that will give additional protection from the elements. Should the product be exposed to excessive dust, the product should be washed prior to installation.

Site Preparation

The design engineer will determine how and where the geocomposite is to be utilized. With any application, care should be used in placing net or composite so that it is not damaged by stones or other protrusions that may compromise the functionality of the product.

Installation

TRANSNET should be installed by hand. Once the roll is delivered to the installation location via rubber-tired loader or other appropriate machinery, the rolls should be inspected for any damage from shipping or handling. Once the rolls are positioned, they should be unrolled by hand. For slope applications, the rolls should be rolled from top to bottom and hand tightened to remove any wrinkles. The TRANSNET portion of adjacent rolls shall be overlapped two to four inches or according to the Engineer's recommendation. These overlaps shall be joined by tying the geonet cores together with white or yellow plastic fasteners (minimum tensile strength of 100 lbs). When placing TRANSNET end to end, overlap in shingle placement fashion a minimum of one foot. For end-to-end placement, the top layer of geotextile shall be peeled back and excess TRANSNET will be trimmed so that the top layer of geotextile covers the attachment of the two layers of geocomposite. The TRANSNET will be attached to adjacent rolls utilizing plastic wire ties. These ties will be placed at a maximum spacing of 5 feet along the sides of the rolls and a maximum of 2 feet for end to end attachment, or according to the Engineer's specification. Metal ties or hog rings are not to be used.

Anchoring

For slope applications, TRANSNET should be placed in a trench so that pull out or slippage is prevented. The trench should be in accordance with the Design Engineer's requirements. Sand bags should be on hand at all times and placed on edges not seamed to prevent uplift from the wind. Welding of the TRANSNET to HDPE liner or any other geomembrane is not recommended.

SKAPS INDUSTRIES

INSTALLATION GUIDELINES

Nonwoven Geotextile, Nets and Composites

Heat Seaming

Nonwoven B Separate or Laminated

Nonwoven geotextiles can be joined together by using fusion seaming methods. The minimum overlap for this type of welding is four inches. Prior to fusion seaming the geotextile together, the installer must demonstrate to the Field Engineer the ability to perform this type of installation method. Areas burned through that are damaged by fusion welding shall be properly repaired. Care should be taken during installation to prevent damage to the geotextile. Torn or punctured material shall be patched with sufficient overlap to prevent separation.

Sewing Procedure

Nonwoven B Separate or Laminated

Fabric layers should be placed on the ground (preferably firm ground) so that the edges to be sewn are parallel and overlapping. The sewing operation typically requires three men--a machine operator and a man on each side of the machine. The lead man should hold the fabric edges evenly together and feed the fabric into the sewing machine head or folder. The man behind the machine should hold tension on the fabric so the machine operator has a taut and straight edge to sew across. If the machine misses a stictch or runs off the fabric, terminate the seam by cutting and tying the thread. Begin a new seam approximately one foot behind the broken seam.

Overlapping

Nonwoven-Separate or Laminated Separate

Roll goods form of geotextile should be overlapped a minimum of 12". Care should be taken that roll goods remain parallel to each other. Extreme care should be taken to assure that soil does not intrude into the composite structure thus clogging the drainage net.

HDPE Chemical Resistance Chart

Reagent	70 deg. F (21 deg. C)	140 deg. F (60 deg. C)
A		
Acetic Acid 1-10%	S	S
Acetic Acid 10-60%	S	M
Acetic Acid 80-100%	S	M
Acetone	M	U
Acrylic Emulsions	S	S
Aluminum Chloride-Dilute	S	S
Aluminum Chloride Conc.	S	S
Aluminum Fluoride Conc.	S	S
Aluminum Sulfate Conc.	S	S
Alums (All Types) Conc.	S	S
Ammonia 100% Dry Gas	S	S
Ammonium Carbonate	S	S
Ammonium Chloride Sat'd	S	S
Ammonium Fluoride 20%	S	S
Ammonium Hydroxide 0.8S S.G.	S	S
Ammonium Metaphosphate Sat'd	S	S
Ammonium Nitrate Sat'd	S	S
Ammonium Persulfate Sat'd	S	S
Ammonium Sulfate Sat'd	S	S
Ammonium Sulfide Sat'd	S	S
Ammonium Thiocyanate Sat'd	S	S
Amyl Acetate	M	U
Amyl Alcohol 100%	S	S
Amyl Chloride 100%	N	U
Aniline 100%	S	N
Antimony Chloride	S	S
Aqua Regia	U	U
B		
Barium Carbonate Sat'd	S	S
Barium Chloride	S	S
Barium Hydroxide	S	S
Barium Sulfate Sat'd	S	S
Barium Sulfide Sat'd	S	S
Beer	S	S
Benzene	M	U
Benzene Suffonic Acid	S	S
Bismuth Carbonate Sat'd	S	S
Bleach Lye 10%	S	S
Black Liquor	S	S
Borax Cold Sat'd	S	S
Boric Acid Dilute	S	S
Boric Acid Conc.	S	S
Bromic Acid 10%	S	S
Bromine Liquid 100%	M	U
Butanediol 10%	S	S
Butanediol 60%	S	S

Reagent	70 deg. F (21 deg. C)	140 deg. F (60 deg. C)
Calcium Nitrate 50%	S	S
Calcium Sulfate	S	S
Camphor Oil	N	U
Carbon Dioxide 100% Dry	S	S
Carbon Dioxide 100%Wet	S	S
Carbon Dioxide Cold Sat'd	S	S
Carbon Disulfide	N	U
Carbon Monoxide	S	S
Carbon Tetrachloride	M	U
Carbonic Acid	S	S
Castor Oil Conc.	S	S
Chlorine Dry Gas 100%	S	M
Chlorine Moist Gas	M	U
Chlorine Liquid	M	U
Chlorobenzene	M	U
Chloroform	M	U
Chlorosulfonic Acid 100%	M	U
Chrome Alum Sat'd	S	S
Chromic Acid 20%	S	S
Chromic Acid Up to 50%	S	S
Chromic Acid and Sulfuric Acid	S	M
Cider	S	S
Citric Acid Sat'd	S	S
Coconut Oil Alcohols	S	S
Cola Concentrates	S	S
Copper Chloride Sat'd	S	S
Copper Cyanide Sat'd	S	S
Copper Fluoride 2%	S	S
Copper Nitrate Sat'd	S	S
Copper Sulfate Dilute	S	S
Copper Sulfate Sat'd	S	S
Cottonseed Oil	S	S
Crude Oil	S	M
Cuprous Chloride Sat'd	S	S
Cychohexanol	S	S
Cyclohexanone	M	U
D		
Detergents Synthetic	S	S
Developers, Photographic	S	S
Dextrin Sat'd	S	S
Dextrose Sat'd	S	S
Dibutylphthalate	S	M
Disodium Phosphate	S	S
Diazo Salts	S	S
Diethylene Glycol	S	S
Diglycolic Acid	S	S
Dimethylamine	M	U

Butanediol 100%	S	S
Butyl Alcohol 100%	S	S

C		
Calcium Bisulfide	S	S
Calcium Carbonate Sat'd	S	S
Calcium Chlorate Sat'd	S	S
Calcium Chloride Sat'd	S	S
Calcium Hydroxide	S	S
Calcium Hypochlorite RRGH	S	S
Ethylene Chlorohydrin	U	U
Ethylene Dichloride	M	U
Ethylene Glycol	S	S

F		
Ferric Chloride Sat'd	S	S
Ferric Nitrate Sat'd	S	S
Ferrous Chloride Sat'd	S	S
Ferrous Sulfate	S	S
Fish Solubles	S	S
Fluoboric Acid	S	S
Fluorine	S	U
Fluosilicic Acid 32%	S	S
Fluosilicic Acid Conc.	S	S
Formaldehyde 40%	S	N
Formic Acid 0-20%	S	S
Formic Acid 20-50%	S	S
Formic Acid 100%	S	S
Fructose Sat'd	S	S
Fruit Pulp	S	S
Fuel Oil	S	U
Furfural 100%	M	U
Furfuryl Alcohol	M	U

G		
Gallic Acid Sat'd	S	S
Gas Liquids	S	M
Gasoline	M	U
Gin	S	U
Glucose	S	S
Glycerine	S	S
Glycol	S	S
Glycolic Acid 30%	S	S
Grape Sugar Sat'd Aq.	S	S

H		
Hexanol, Tert.	S	S
Hydrobromic Acid 50¡/O	S	S
Hydrocyanic Acid Sat'd	S	S
HydrochloricAcld 10%	S	S
Hydrochloric Acid 30%	S	S
Hydrochloric Acid 35%	S	S
Hydrochloric Acid Conc.	S	S
Hydrofluoric Acid 40%	S	S
Hydrofluoric Acid 60%	S	S
Hydrofluoric Acid 75%	S	S

E		
Emulsions, Photographic	S	S
Ethyl Acetate 100%	M	U
Ethyl Alcohol 100%	S	S
Ethyl Alcohol 35%	S	S
Ethyl butyrate	M	U
Ethyl Chloride	M	U
Ethyl Ether	U	U
Ethylene Chloride	U	U
Lactic Acid 90¡/O	S	S
Latex	S	S
Lead Acetate Sat'd	S	S
Lube Oil	S	M

M		
Magnesium Carbonate Sat'd	S	S
Magnesium Chloride Sat'd	S	S
Magnesium Hydroxide Sat'd	S	S
Magnesium Nitrate Sat'd	S	S
Magnesium Sulfate Sat'd	S	S
Mercuric Chloride Sat'd	S	S
Mercuric Cyanide Sat'd	S	S
Mercurous Nitrate Sat'd	S	S
Mercury	S	S
Methyl Alcohol 100%	S	S
Methyl Bromide	M	U
Methyl Chloride	M	U
Methyl Ethyl Ketone 100%	M	U
Methylsulfuric Acid	S	S
Methylene Chloride 100%	M	U
Milk	S	S
Mineral Oils	S	U
Molasses Comm.	S	S

N		
Nickel Chloride Sat'd	S	S
Nickel Nitrate Conc.	S	S
Nickel Sulfate Sat'd	S	S
Nicotine Dilute	S	S
Nicotinic Acid	S	S
Nitric Acid 0-30%	S	S
Nitric Acid 30-50%	S	M
Nitric Acid 70%	S	M
Nitric Acid 95-98%	U	U
Nitrobenzene 100%	U	U

O		
Octyl Cresol	S	U
Oils and Fats	S	M
Oleic Acid Conc.	S	U
Oleum Conc.	U	U
Orange Extract	S	S
Oxalic Acid Dilute	S	S
Oxalic Acid Sat'd	S	S
Ozone 100%	S	U

Hydrogen 100%	S	S
Hydrogen Bromide 10%	S	S
Hydrogen Chloride Gas Dry	S	S
Hydrogen Peroxide 30%	S	S
Hydrogen Peroxide 90%	S	M
Hydrogen Phosphide 100%	S	S
Hydroquinone	S	S
Hydrogen Sulfide	S	S
Hypochlorus Acid Conc.	S	S
I		
Inks	S	S
L		
Lodine (Alc. Sol.) Conc.	S	U
Lactic Acid 10%	S	S
Plating Solutions		
Brass	S	S
Cadmium	S	S
Chromium	N	N
Copper	S	S
Gold	S	S
Indium	S	S
Lead	S	S
Nickel	S	S
Rhodium	S	S
Silver	S	S
Tin	S	S
Zinc	S	S
Potassium Bicarbonate Sat'd	S	S
Potassium Borate 1%	S	S
Potassium Bromate 10%	S	S
Potassium Bromide Sat'd	S	S
Potassium Carbonate	S	S
Potassium Chlorate Sat'd	S	S
Potassium Chloride Sat'd	S	S
Potassium Chromate 40%	S	S
Potassium Cyanide Sat'd	S	S
Potassium Dichromate 40%	S	S
Potassium Ferri/Ferro Cyanide Sat'd	S	S
Potassium Fluoride	S	S
Potassium Hydroxide 20%	S	S
Potassium Hydroxide Conc.	S	S
Potassium Nitrate Sat'd	S	S
Potassium Perborate Sat'd	S	S
Potassium Perchlorate 10%	S	S
Potassium Sulfate Conc.	S	S
Potassium Sulfide Conc.	S	S
Potassium Sulfite Conc.	S	S
Potassium Persulfate Satd	S	S
Propargyl Alcohol	S	S
Propyl Alcohol	S	S
Propylene Dichloride 100%	U	U
Propylene Glycol	S	S
R		
P		
PerchloncAcid 10%	S	S
Petroleum Ether	U	U
Phenol 90%	U	U
Phosphoric Acid Up to 30%	S	S
Phosphoric Acid Over 30%	S	S
Phosphoric Acid 90%	S	S
Phosphorous (Yellow) 100%	S	N
Phosphorus Pentoxide 100%	S	N
Photographic Solutions	S	S
Pickling Baths		
Sulfuric Acid	S	S
Hydrochloric Acid	S	S
Sulfuric-Nitric	S	U
Sodium Ferncyanide	S	S
Sodium Ferrocyanide Sat'd	S	S
Sodium Fluoride Sat'd	S	S
Sodium Hydroxide Conc.	S	S
Sodium Hypochlorite	S	S
Sodium Nitrate	S	S
Sodium Sulfate	S	S
Sodium Sulfide 25%	S	S
Sodium Sulfide Sat'd Sol.	S	S
Sodium Sulfite Sat'd	S	S
Stannous Chloride Sat'd	S	S
Stannic Chloride Sat'd	S	S
Starch Solution SaUd	S	S
Steanc Acid 100%	S	S
Sulfuric Acid 0-50%	S	S
Sulfuric Acid 70%	S	M
Sulfuric Acid 80%	S	U
Sulfuric Acid 96%	M	U
Sulfuric Acid 98%	M	U
Sulfuric Acid, Fuming	U	U
Sulfurous Acid	S	S
T		
Tallow	S	M
Tannic Acid 10%	S	S
Tanning Extracts Comm.	S	S
Tartaric Acid Sat'd	N	N
Tetrahydrofurane	N	U
Titanium Tetrachloride Sat'd	N	U
Toluene	M	U
Transformer Oil	S	M
Trisodium Phosphate Sat'd	S	S
Trichloroethylene	U	U
U		
Urea Up to 30%	S	S
Urine	S	S
V		
Vinegar Comm.	S	S

Rayon Coagulating Bath	S	S

S		
Sea Water	S	S
Selenic Acid	S	S
Shortening	S	S
Silicic Acid	S	S
Silver Nitrate Sol.	S	S
Soap Solution Any Conc'n	S	S
Sodium Acetate Sat'd	S	S
Sodium Benzoate 35%	S	S
Sodium Bicarbonate Sat'd	S	S
Sodium Bisulfate Sat'd	S	S
Sodium Bisulfite Sat'd	S	S
Sodium Borate	S	S
Sodium Bromide Dilute Sol.	S	S
Sodium Carbonate Con.	S	S
Sodium Carbonate	S	S
Sodium Chlorate Sat'd.	S	S
Sodium Chkoride Sat'd	S	S
Sodium Cyanide	S	S
Sodium Dichromate Sat'd	S	S

Vanilla Extract	S	S

W		
Wetting Agents	S	S
Whiskey	S	N
Wines	S	S

X		
Xylene	M	U

Y		
Yeast	S	S

Z		
Zinc Chloride Sat'd	S	S
Zinc Sulfate Sat'd	S	S

SKAPS TRANSNET
PROJECT LIST

1. Landwell Basic Remediation

Henderson, Nevada

Purpose	-	Restoration Project
Installation Date	-	Summer 2008
Owner	-	Landwell
Engineer	-	Geosyntec
Installer	-	Environmental Specialties, Inc.
Product	-	Transnet 270-2-6; Transnet 220-2-8
Quantity	-	2,021,600 sf; 2,534,000 sf

2. Shoosmith Landfill Cell 22 & 23

Chester, Virginia

Purpose	-	Landfill Cells
Installation Date	-	2005 and 2006
Owner	-	Shoosmith Brothers
Engineer	-	SCS Engineers
Installer	-	Landsaver
Product	-	Transnet 330-2-6; Transnet 330-2-6
Quantity	-	942,000 sf; 700,000 sf

3. AES Cayuga Landfill

Lansing, New York

Purpose	-	Landfill Cell
Installation Date	-	Fall 2007
Owner	-	AES Cayuga
Engineer	-	Fagan Engineers, Dave Andrews
Installer	-	Chenango Contracting, Carl Burdick (607) 729-8500
Product	-	Transnet 270-2-8
Quantity	-	377,650 sf

4. Bath Landfill

Bath, New York

Purpose	-	Landfill Cell
Installation Date	-	Summer 2008
Owner	-	Steuben County Department of Public Works
Engineer	-	Barton & Loguidice, John Brusa (315)457-5200
Installer	-	Chenango Contracting, Carl Burdick (607) 729-8500
Product	-	Transnet 270-2-6; GE-124
Quantity	-	1,100,400 sf; 44,250 sy

5. Berkeley County Landfill Cap

Martinsville, West Virginia

Purpose	-	Landfill Closure
Installation Date	-	Spring/Summer 2004
Owner	-	Berkeley County
Engineer	-	GAI Consultants, Charlie Straley (304) 926-8100
Installer	-	Environmental Construction, Inc., Matt Gibson (304) 755-8241
Product	-	Transnet 220-2-H060
Quantity	-	2,450,000 sf

6. Chevron - Phase 2, Castro Cove Sediment Remediation Project

Richmond, CA

Purpose	-	Sediment Cap
Installation Date	-	February, 2009
Owner	-	Chevron, Inc.
Engineer	-	Arcadis Engineers
Installer	-	SGS, Inc, Reno, NV (775) 856-1300
Product	-	Transnet 270-2-8
Quantity	-	718,740 sf

7. Clover Power Station Landfill

Clover, Virginia

Purpose	-	Landfill Cell
Installation Date	-	Spring 2008
Owner	-	Clover Power
Engineer	-	Golder & Associates
Installer	-	Texas Environmental Plastics, Bob Nantz (281)821-7320
Product	-	Transnet 300-2-6
Quantity	-	1,272,670 sf

8. Decatur County Landfill

Bainbridge, GA

Purpose	-	Landfill Cell
Installation Date	-	August 2008
Owner	-	Decatur County Board of Commissioners
Engineer	-	Harbin Engineering, Steve Harbin (478) 972-9122
Installer	-	Plastic Fusion, Huntsville, AL (256) 852-0378
Product	-	Transnet 270-1-6
Quantity	-	365,000 sf

9. Haley Pike Landfill Closure

Lexington, KY

Purpose	-	Landfill Closure
Installation Date	-	Spring 2007
Owner	-	St. Mary's County
Engineer	-	Tetra Tech, Roger Blair (859)223-8000
Installer	-	Environmental Construction Inc., Matt Gibson (304)755-8241
Product	-	Transnet 220-2-6
Quantity	-	2,735,880 sf

10. Jamestown Landfill

Jamestown, CA

Purpose	-	Landfill Cell
Installation Date	-	September 2008
Owner	-	City of Jamestown, CA
Engineer	-	RMC Geoscience
Installer	-	D&E Construction, Visalia, CA (925) 934-5625
Product	-	Transnet 220-2-6
Quantity	-	833,750 sf

11. Johnston County Landfill

Smithfield, North Carolina

Purpose	-	Landfill Cell
Installation Date	-	Spring 2009
Owner	-	Johnston County
Engineer	-	Richardson, Smith, Gardner & Assc. Pieter Scheer (919)828-0577
Installer	-	Hallaton, Inc. Kennedy Garber (410)583-7700
Product	-	Transnet 270-2-6
Quantity	-	812,000 sf

12. Lewiston Solid Waste

Lewiston, ME

Purpose	-	Landfill Cell
Installation Date	-	May 2009
Owner	-	City of Lewiston, ME
Engineer	-	CMA Engineers, Portland, ME
Installer	-	RTD, Inc., Madison, ME (207) 696-3964
Product	-	Transnet 270-2-7; Transnet 330-2-7
Quantity	-	288,400 sf; 288,400 sf

13. Princess Collery Mine

Sydney Mines, Nova Scotia

Purpose	-	Mine Tailings Cap
Installation Date	-	January 2009
Owner	-	Sydney Mines of Canada
Engineer	-	A&E Services, Toronto, CN
Installer	-	Titan Environmental, Grande Pointe, Manitoba (204) 256-5446
Product	-	Transnet 220-2-6
Quantity	-	1,984,500 sf

S&ME

SUBMITTAL COVER SHEET

TO:	Fred L. Brown	**Date: 06/10/11**	**Job No.: 1356-07-017-05**
ADDRESS:	Earnhardt Grading, Inc.	Cover System Retrofit	
	7525 Old Plank Road	Pine Hall Road Landfill	
	Stanley, NC 28164	Duke Energy – Belews Creek Steam Station	
	Email: Fred@earnhardtgrading.com	Belews Creek, North Carolina	

Submittal Log ID No.: 003	Revision No.: 00	Contractor Transmittal No.: EGI-003
Specification Section: 02060	Date of Submittal Report: 06/09/11	
Submittal Subject: Aggregate		

Notations:
- ☐ No Exception Taken
- ☐ Corrected as Noted
- ☐ Rejected
- ☐ Revise and Resubmit
- ☐ Submit Specified Items
- ☒ As Noted Herein

Remarks:

The gradation provided in the product quality summary report for aggregate base course (ABC) and No. 67 stone meet the NCDOT aggregate gradation requirements for the Type A1 (ABC) and Type A2 (No. 57 stone). As specified in Section 02060, Part 1.4.C, please provide the modified Proctor curve information for the Type A1 aggregate to be used.

Attachments:
EGI Transmittal No. 003
NCDOT Standard Specifications for Roads and Structures, Table 1005-1

Review of this submittal does not relieve the Contractor from their responsibility for deviations from the Contract Documents nor from their responsibility for errors or omissions in the submittal. Contractor is, and Engineer is not, responsible for matters relating to fabrication, shipping, handling, storage, assembly, installation, construction (including safety), and coordination for performing the Work.

6/10/11	6/10/11
Engineer of Record **Date**	**Prepared by** **Date**
Kenneth Daly, P.E.	Kyle Baucom, E.I.

Copies to:
- ☒ David Grogg, Duke Energy
- ☒ Kim Benson, Duke Energy
- ☐
- ☒ S&ME File No. 1356-07-017-05
- ☐
- ☐

Earnhardt Grading, Inc
7525 Old Plank Rd
Stanley, North Carolina 28164

Phone: 704-601-4290
Fax: 704-601-4295

Project: Belews Creek Cap Repair

Submittal: BC Cap 003

To: S&ME, Inc.
9751 Southern Pines Blvd
Charlotte, North Carolina 28273
Attn: Ken Daly

ENCLOSED

- [ ] Drawings
- [ ] Specifications
- [ ] Samples
- [x] Submittal Data
- [ ] Letter
- [ ] Photographs
- [ ] Brochure

SEPARATE COVER [ ]

Note:
- ___ Copies for job use in final approved form
- ___ Sample of material required to be submitted
- X Submitt

SUBMITTED FOR:

- [x] Approval
- [ ] Comment
- [ ] Your Use
- [ ] Color Selection
- [ ] _____
- [ ] _____
- [ ] _____

RETURNED:

- [ ] Approved
- [ ] Approved as Noted
- [ ] Corrected
- [ ] Resubmit for Approval Corrected
- [ ] Construction May Proceed Resubmit Corrected
- [ ] Disapproved

ITEMS IDENTIFIED AS FOLLOWS

Drawing	Qty	Date	Descritption
	1	6/9/2011	Aggregrate

Remarks: _____

Earnhardt Grading, Inc

By

Fred L Brown

Vulcan Materials Company

Product Quality Summary Report

Period 01/01/2011 - 06/06/2011
Plant **103-Stokesdale**

	Product	067 NC #67	107 NC ABC
	Specification	NC #67	NCDOT ABC
1 1/2" (37.5mm)			✓100.0
1" (25mm)		✓100.0	✓87.7
3/4" (19mm)		94.5	74.5
1/2" (12.5mm)		✓39.0	✓61.5
3/8" (9.5mm)		24.4	
#4 (4.75mm)		✓5.8	✓46.0
#8 (2.36mm)		✓2.4	
#10 (2mm)			✓39.1
#40 (0.425mm)			✓25.3
#200 (75um)			✓8.94

KB

Vulcan Materials Company

Product Quality Summary Report

Period 01/01/2011 - 06/06/2011

Plant **103-Stokesdale**

Comments

Query Query Selections
Date Created 06/06/2011
Date Range 01/01/2011 - 06/06/2011
Plant Stokesdale

Vulcan
Materials Company

June 6, 2011

Attn: Fred Brown
Earnhardt Grading

Job Reference: Duke Energy – Belews Creek Cap Project

This letter is to certify that the Aggregate Base Course (ABC #107), #57 clean stone, and Class B rip rap that is produced and sold from our Stokesdale Quarry meets the specification as set forth in N.C.D.O.T's Standard Specifications for Road and Structures, dated July 2006. Please advise if additional information is needed. We appreciate the opportunity to serve your crushed stone needs.

Sincerely yours,

Dan Wales

Daniel G. Wales
Technical Services Specialist
Southern & Central NC

Vulcan Construction Materials, LP Mideast Division
P.O.BOX 4239• Winston-Salem, North Carolina 27115
Telephone 336 744 2917 • Cell 336 409 6342 • Fax 336 744 2039
E-Mail – walesd@vmcmail.com

Vulcan Construction Materials, LP Mideast Division
P.O.BOX 4239• Winston-Salem, North Carolina 27115
Telephone 336 744 2917 • Cell 336 409 6342 • Fax 336 744 2039
E-Mail – walesd@vmcmail.com

TABLE 1005-1
AGGREGATE GRADATION, COARSE AGGREGATE

STD. SIZE #	PERCENTAGE OF TOTAL BY WEIGHT OF PASSING																REMARKS
	2"	1 1/2"	1"	3/4"	1/2"	3/8"	#4	#8	#10	#16	#30	#40	#50	#80	#100	#200	
4	100	90-100	20-55	0-15		0-5										0-*0.6	Asphalt Plant Mix Pavement
467M	100	95-100		35-70		0-30	0-5									0-*0.6	Asphalt Plant Mix Pavement
5		100	90-100	20-55	0-10	0-5										0-*0.6	AST Mat coat, Sediment Control Stone
57		100	95-100		25-60		0-10	0-5								0-*0.6	Str. Conc., Shoulder Drain, Sediment Control Stone
57M		100	95-100		25-45		0-10	0-5								0-*0.6	P. C. Concrete Pavement
6M			100	90-100	20-55	0-20	0-8									*	AST
67			100	90-100		20-55	0-10	0-5								0-*0.6	Str. Conc., Asphalt Plant Mix Pavement.
78M				100	98-100	75-100	20-45	0-15								0-*0.6	Asphalt Plant Mix Pavement, AST Weep Hole Drains, Str. Concrete
14M						100	35-70	5-20		0-8						*	* AST
ABC		100	75-97		55-80		35-55		25-45			14-30				4-12**	Aggregate. Stabilization Aggregate/Base Course Asphalt Plant Mix Pavement
ABC(M)		100	75-100		45-79		20-40		0-25							0-12**	Maintenance Stabilization

Compared against #67 gradation

KB

S&ME

SUBMITTAL COVER SHEET

TO:	Fred L. Brown	**Date: 06/10/11**	**Job No.: 1356-07-017-05**
ADDRESS:	Earnhardt Grading, Inc.	Cover System Retrofit	
	7525 Old Plank Road	Pine Hall Road Landfill	
	Stanley, NC 28164	Duke Energy – Belews Creek Steam Station	
	Email: Fred@earnhardtgrading.com	Belews Creek, North Carolina	

Submittal Log ID No.: 004	Revision No.: 00	Contractor Transmittal No.: EGI-003
Specification Section: 02500	Date of Submittal Report: 06/09/11	
Submittal Subject: HDPE Piping		

Notations:
- ☐ No Exception Taken
- ☐ Corrected as Noted
- ☐ Rejected
- ☐ Revise and Resubmit
- ☐ Submit Specified Items
- ☒ As Noted Herein

Remarks:

The HDPE piping layout for the down drain retrofit and seepage diaphragms is generally consistent with Drawing D4. Down drain piping will be replaced with solid wall SDR 32.5 HDPE as documented in the attached e-mail dated June 6, 2011 and a formal design change notice to follow.

Attachments:
EGI Transmittal No. 004
E-mail dated June 6, 2011

Review of this submittal does not relieve the Contractor from their responsibility for deviations from the Contract Documents nor from their responsibility for errors or omissions in the submittal. Contractor is, and Engineer is not, responsible for matters relating to fabrication, shipping, handling, storage, assembly, installation, construction (including safety), and coordination for performing the Work.

Engineer of Record Kenneth Daly, P.E.	**Date** 6/10/11	**Prepared by** Kyle Baucom, E.I.	**Date** 6/10/11

Copies to:
- ☒ David Grogg, Duke Energy
- ☒ Kim Benson, Duke Energy
- ☐
- ☒ S&ME File No. 1356-07-017-05
- ☐
- ☐

Earnhardt Grading, Inc

7525 Old Plank Rd
Stanley, North Carolina 28164

Phone: 704-601-4290
Fax: 704-601-4295

Project: Belews Creek Cap Repair

Submittal: BC Cap 004

To: S&ME, Inc.
9751 Southern Pines Blvd
Charlotte, North Carolina 28273
Attn: Ken Daly

ENCLOSED

- [X] Drawings
- [ ] Specifications
- [ ] Samples
- [ ] Submittal Data
- [ ] Letter
- [ ] Photographs
- [ ] Brochure

SEPARATE [ ]

COVER

Note:
- ___ Copies for job use in final approved form
- ___ Sample of material required to be submitted
- X Submitt

SUBMITTED FOR:

- [X] Approval
- [ ] Comment
- [ ] Your Use
- [ ] Color Selection
- [ ] _____
- [ ] _____
- [ ] _____

RETURNED:

- [ ] Approved
- [ ] Approved as Noted
- [ ] Corrected
- [ ] Resubmit for Approval Corrected
- [ ] Construction May Proceed Resubmit Corrected
- [ ] Disapproved

ITEMS IDENTIFIED AS FOLLOWS

Drawing	Qty	Date	Descritption
02667-114	1	6/9/2011	Seepage Pipe Drawing

Remarks: _____

Earnhardt Grading, Inc

By

Fred L Brown

This Drawing / Design Is Provided By And Is Property Of Plastic Fusion Fabricators, Inc. (PFF). It Is Intended For Fabrication, Installation And / Or Identification Purposes Of The Product Depicted And Is Not To Be Circulated Or Reproduced In Any Fashion Without The Specific Permission Of The Management Of PFF. ©1999 All Rights Reserved.

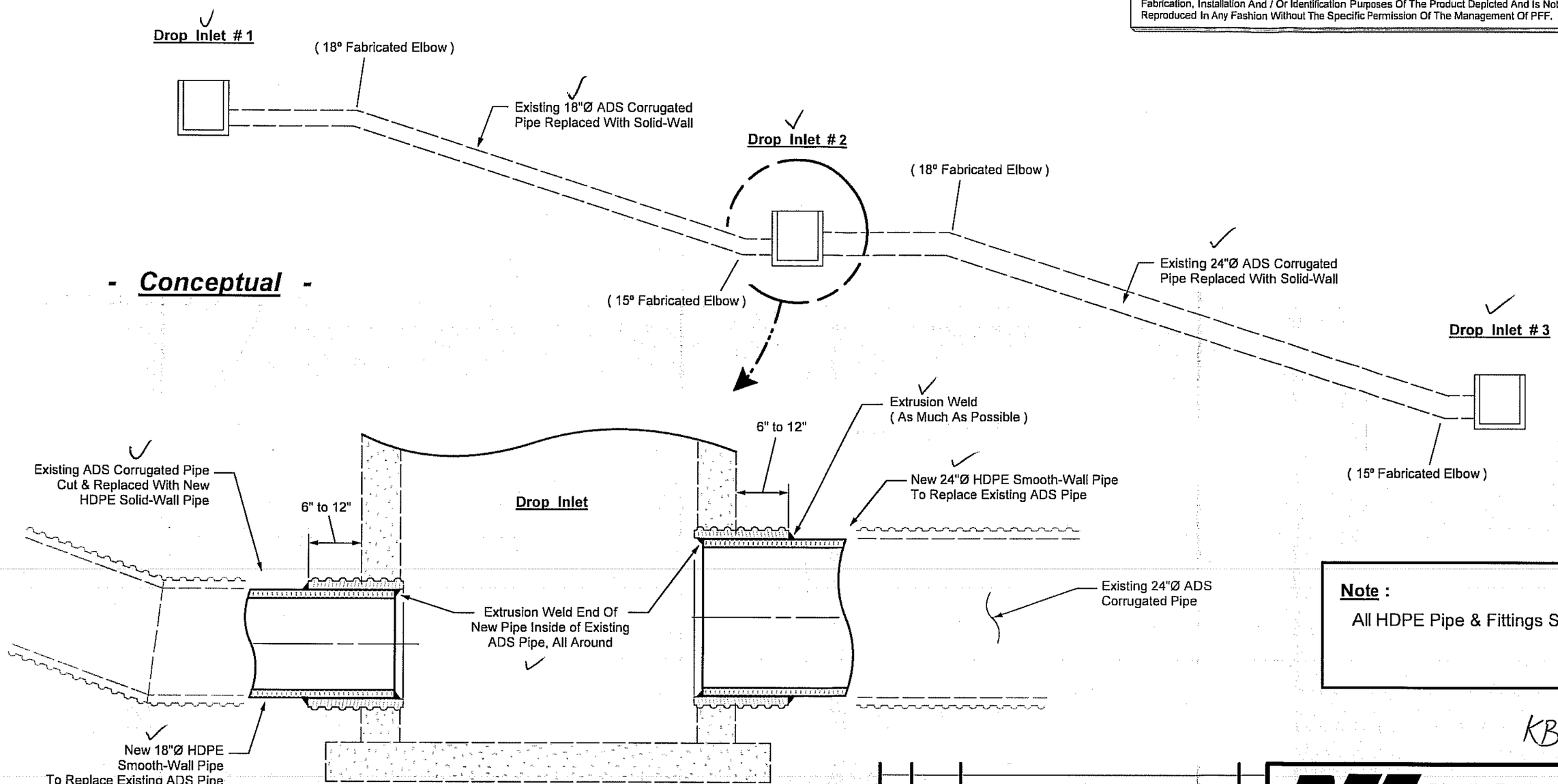

Note :

All HDPE Pipe & Fittings SDR-32.5

KB

Penetrations Typical of :

(2) - 18"Ø & (2) - 24"Ø

NO.	DATE		BY

REVISIONS

Drawn By: J. Yoder	Date: 6-2-11
Technician:	Date:
PFF Estimator:	Date:
Q/C:	Date:
Customer Approval:	Date:

Plastic Fusion Fabricators, Inc.
Your Total Containment Resource

3455 Stanwood Blvd. - Huntsville, Alabama 35811
Tel: 256-852-0378 / Fax: 256-852-0388 / http://www.plasticfusion.com

Duke Energy - Pine Hall Road Ash Landfill / Belews Creek, NC

Proposed Down Drain Retrofit Layout Details

PFF Drawing No: 02667-144	Scale: N.T.S.	Rev.
PFF Job No: F-11144	Sheet: 1 of 1	0

PFF Drawing Form B (11 x 17)

This Drawing / Design Is Provided By And Is Property Of Plastic Fusion Fabricators, Inc. (PFF). It Is Intended For Fabrication, Installation And / Or Identification Purposes Of The Product Depicted And Is Not To Be Circulated Or Reproduced In Any Fashion Without The Specific Permission Of The Management Of PFF. ©1999 All Rights Reserved.

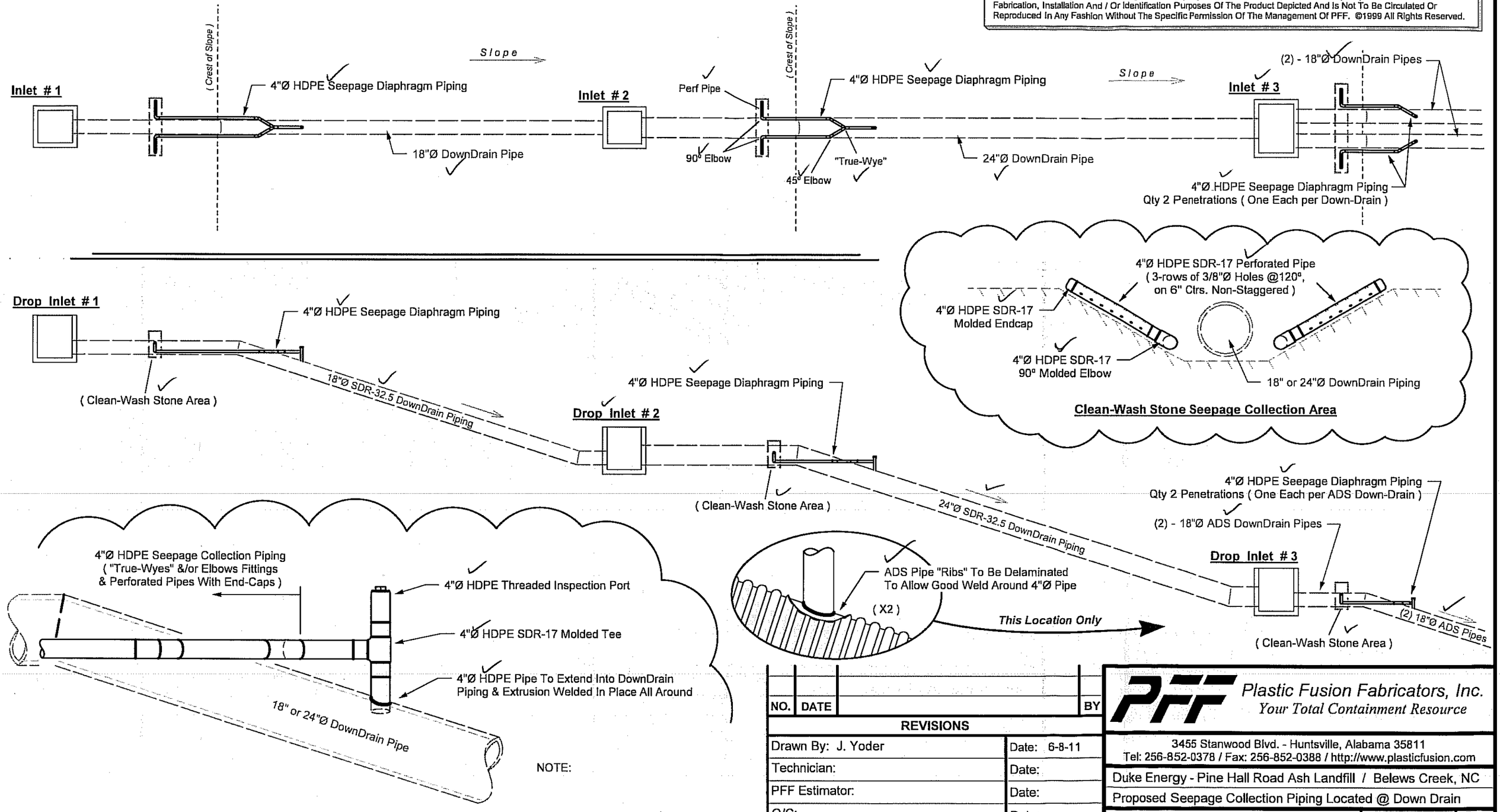

NO.	DATE		BY

REVISIONS

Drawn By: J. Yoder	Date: 6-8-11
Technician:	Date:
PFF Estimator:	Date:
Q/C:	Date:
Customer Approval:	Date:

Plastic Fusion Fabricators, Inc.
Your Total Containment Resource
3455 Stanwood Blvd. - Huntsville, Alabama 35811
Tel: 256-852-0378 / Fax: 256-852-0388 / http://www.plasticfusion.com

Duke Energy - Pine Hall Road Ash Landfill / Belews Creek, NC

Proposed Seepage Collection Piping Located @ Down Drain

PFF Drawing No: 02667-144 **Addition #1**	Scale: N.T.S.	Rev. 0
PFF Job No: F-11144	Sheet: 1 of 1	

Kyle Baucom

From: Kenneth Daly
Sent: Monday, June 06, 2011 4:57 PM
To: Leif Martin
Cc: 'Fred Brown'; 'Jamie Lineberger'; Kimberlee W. PE Benson (Kimberlee.Benson@duke-energy.com); david.grogg@duke-energy.com; Kyle Baucom
Subject: RE: Pine Hall Road Ash Landfill: Hold on the Down Drain Pipe

Fred, Leif, and others,

S&ME has reviewed the stability of down drain pipe for an SDR 32.5 pipe. Results of our analysis indicate that SDR 32.5 pipe is acceptable on the basis that it has a minimum 2 foot thick cover soil.

Guys, we don't' anticipate significant loading on this pipe perhaps with the exception of during construction.

We would recommend changing the pipe to SDR 32.5 on the basis that there is no construction traffic over the pipe.

Before making a final decision, we request that you provide a revised cost estimate for the pipe work. Final decision will come from Duke on this.

Thanks - we appreciate your quick response on this.

Regards,

Ken

Ken Daly, P.E.
Senior Project Engineer/Civil Engineering Department Manager

S&ME
ENGINEERING INTEGRITY.

S&ME, Inc.
9751 Southern Pine Boulevard
Charlotte NC 28273 Map
Ph: 704-523-4726
Fax: 704-525-3953
Mobile: 704-604.6480
kdaly@smeinc.com
www.smeinc.com

This electronic message and its attachments are forwarded to you for convenience and “for information only.” The message may represent a summary with limitations, conditions and further explanations omitted in the interest of brevity and time constraints. The contents of this electronic message and any attachments may be preliminary and incomplete, subject to review and revision. If this electronic transmittal contains Findings, Conclusions or Recommendations, S&ME, Inc. will submit a follow-up hard copy via mail or overnight delivery for your records, and this hard copy will serve as the final record. In the event of conflict between electronic and hard copy documents, the hard copy will govern. This electronic message and any attachments transmitted with it are the property of S&ME, Inc. and may contain information that is confidential or otherwise protected from disclosure. The information this electronic message contains is intended solely for the use of the one to whom it is addressed, and any other recipient should delete this electronic message and destroy all copies. VER 4, Rev 1 –- 031207

From: Leif Martin [mailto:lmartin@plasticfusion.com]
Sent: Monday, June 06, 2011 4:39 PM
To: Kenneth Daly
Cc: 'Fred Brown'; 'Jamie Lineberger'
Subject: FW: Pine Hall Road Ash Landfill: Hold on the Down Drain Pipe

Ken,

I'm not trying to rush you, but I just wanted to see if you've had an opportunity to review the stability on the SDR 32.5 pipe. So far I'm not having any luck getting the pipe in anything thinner than the SDR 17.

Please let us know what you prefer at your convenience.

Sincerely,

Leif Martin
Estimator/PM

PFF Plastic Fusion Fabricators, Inc.
3455 Stanwood Boulevard
Huntsville, Alabama 35811
Phone: (256) 852-0378 Ext. 257
Fax: (256) 746-1224
http://www.plasticfusion.com/

From: Leif Martin [mailto:lmartin@plasticfusion.com]
Sent: Friday, June 03, 2011 3:33 PM
To: 'Kenneth Daly'
Subject: RE: Pine Hall Road Ash Landfill: Hold on the Down Drain Pipe

Ken,

PFF has the majority of the SDR 32.5 in stock if this will be acceptable.

I will check the availability of all the SDR's with those ranges.

Thank you,
Leif

From: Kenneth Daly [mailto:KDaly@smeinc.com]
Sent: Friday, June 03, 2011 2:50 PM
To: Leif Martin; Fred Brown; Jamie Lineberger
Cc: Kyle Barrows; Shawn Schmitt ; Van Dobbs
Subject: RE: Pine Hall Road Ash Landfill: Hold on the Down Drain Pipe

Leif,

I appreciate you getting back with us quickly and imagine that Fred is alright with it considering we need to move quickly.

Yes we'll consider SDR 32.5, however we want to check the stability on it. Stay tuned.

If there's another option between SDR 17 and SDR 26 let us know too.

Regards,

Ken

Ken Daly, P.E.
Senior Project Engineer/Civil Engineering Department Manager

S&ME
ENGINEERING INTEGRITY.

S&ME, Inc.
9751 Southern Pine Boulevard
Charlotte NC 28273 **Map**
Ph: 704-523-4726
Fax: 704-525-3953
Mobile: 704-604.6480
kdaly@smeinc.com
www.smeinc.com

This electronic message and its attachments are forwarded to you for convenience and "for information only." The message may represent a summary with limitations, conditions and further explanations omitted in the interest of brevity and time constraints. The contents of this electronic message and any attachments may be preliminary and incomplete, subject to review and revision. If this electronic transmittal contains Findings, Conclusions or Recommendations, S&ME, Inc. will submit a follow-up hard copy via mail or overnight delivery for your records, and this hard copy will serve as the final record. In the event of conflict between electronic and hard copy documents, the hard copy will govern. This electronic message and any attachments transmitted with it are the property of S&ME, Inc. and may contain information that is confidential or otherwise protected from disclosure. The information this electronic message contains is intended solely for the use of the one to whom it is addressed, and any other recipient should delete this electronic message and destroy all copies. VER 4, Rev 1 –- 031207

From: Leif Martin [mailto:lmartin@plasticfusion.com]
Sent: Friday, June 03, 2011 3:42 PM
To: Kenneth Daly; 'Fred Brown'; 'Jamie Lineberger'
Cc: Kyle Barrows; Shawn Schmitt ; Van Dobbs
Subject: RE: Pine Hall Road Ash Landfill: Hold on the Down Drain Pipe

Ken,

I know I should be going through Earnhardt, but to save time, I thought it would be better to answer your question directly.

PFF was in the process of getting availability on the pipe ranging from SDR 26 or thicker. Availability is the biggest issue and that's why I priced it with the SDR 17. We will do everything we can to provide a thinner wall pipe, but there are no guarantees and I won't know anything until Monday.

Since you prefer to stay with the thinner wall pipe, is there a possibility of using an SDR 32.5?

Please let me know in regards to my question.

Thank you,

Leif Martin
Estimator/PM

PFF ***Plastic Fusion Fabricators, Inc.***
3455 Stanwood Boulevard
Huntsville, Alabama 35811
Phone: (256) 852-0378 Ext. 257
Fax: (256) 746-1224
http://www.plasticfusion.com/

From: Kenneth Daly [mailto:KDaly@smeinc.com]
Sent: Friday, June 03, 2011 2:04 PM
To: Fred Brown; Jamie Lineberger; lmartin@plasticfusion.com
Cc: kimberlee.benson@duke-energy.com; David.Grogg@duke-energy.com
Subject: RE: Pine Hall Road Ash Landfill: Hold on the Down Drain Pipe

Fred,

Duke Energy want Earnhardt to move forward with down-drain pipe replacement as planned.

Can you tell us however, what is the likelihood of reducing costs by providing a thinner wall pipe (other than SDR 17).

Thanks and regards,

Ken

Ken Daly, P.E.
Senior Project Engineer/Civil Engineering Department Manager

S&ME Logo
ENGINEERING INTEGRITY.

S&ME, Inc.
9751 Southern Pine Boulevard
Charlotte NC 28273 **Map**
Ph: 704-523-4726
Fax: 704-525-3953
Mobile: 704-604.6480
kdaly@smeinc.com
www.smeinc.com

This electronic message and its attachments are forwarded to you for convenience and “for information only.” The message may represent a summary with limitations, conditions and further explanations omitted in the interest of brevity and time constraints. The contents of this electronic message and any attachments may be preliminary and incomplete, subject to review and revision. If this electronic transmittal contains Findings, Conclusions or Recommendations, S&ME, Inc. will submit a follow-up hard copy via mail or overnight delivery for your records, and this hard copy will serve as the final record. In the event of conflict between electronic and hard copy documents, the hard copy will govern. This electronic message and any attachments transmitted with it are the property of S&ME, Inc. and may contain information that is confidential or otherwise protected from disclosure. The information this electronic message contains is intended solely for the use of the one to whom it is addressed, and any other recipient should delete this electronic message and destroy all copies. VER 4, Rev 1 –- 031207

From: Fred Brown [mailto:fred@earnhardtgrading.com]
Sent: Thursday, June 02, 2011 4:44 PM
To: Kenneth Daly; Jamie Lineberger; 'lmartin@plasticfusion.com'
Cc: 'kimberlee.benson@duke-energy.com'; 'David.Grogg@duke-energy.com'
Subject: Re: Pine Hall Road Ash Landfill: Hold on the Down Drain Pipe

To expedite the project schedule, I have authorized PFF to proceed. I will try to stop it.
Fred L Brown
7525 Old Plank Rd
Stanley, NC 28164
Phone 704-361-7881

From: Kenneth Daly <KDaly@smeinc.com>
To: Fred Brown; Jamie Lineberger
Cc: Kimberlee.Benson@duke-energy.com <Kimberlee.Benson@duke-energy.com>; Grogg, David W <David.Grogg@duke-energy.com>
Sent: Thu Jun 02 16:21:27 2011
Subject: Pine Hall Road Ash Landfill: Hold on the Down Drain Pipe

Fred and Jamie,

Fred we understand you're on vacation this week and hope you're enjoying (or that you have enjoyed) your time off.

We felt it was important to communicate this subject with you all. To that end, and at Kim's and David's request, I called your office and spoke with Jamie Lineberger this afternoon.

Duke is asking that you hold off on the down drain replacement work for the time being. We are considering an option to have the original contractor (Morgan Corp.) take care of that work. We hope to have this resolved quickly. Please stay tuned.

Regards,

Ken

Ken Daly, P.E.
Senior Project Engineer/Civil Engineering Department Manager

S&ME
ENGINEERING INTEGRITY.

S&ME, Inc.
9751 Southern Pine Boulevard
Charlotte NC 28273 **Map**
Ph: 704-523-4726
Fax: 704-525-3953
Mobile: 704-604.6480
kdaly@smeinc.com
www.smeinc.com

This electronic message and its attachments are forwarded to you for convenience and “for information only.” The message may represent a summary with limitations, conditions and further explanations omitted in the interest of brevity and time constraints. The contents of this electronic message and any attachments may be preliminary and incomplete, subject to review and revision. If this electronic transmittal contains Findings, Conclusions or Recommendations, S&ME, Inc. will submit a follow-up hard copy via mail or overnight delivery for your records, and this hard copy will serve as the final record. In the event of conflict between

electronic and hard copy documents, the hard copy will govern. This electronic message and any attachments transmitted with it are the property of S&ME, Inc. and may contain information that is confidential or otherwise protected from disclosure. The information this electronic message contains is intended solely for the use of the one to whom it is addressed, and any other recipient should delete this electronic message and destroy all copies.
VER 4, Rev 1 –- 031207

S&ME

SUBMITTAL COVER SHEET

TO:	Fred L. Brown	**Date: 06/20/11**	**Job No.: 1356-07-017-05**
ADDRESS:	Earnhardt Grading, Inc.	Cover System Retrofit	
	7525 Old Plank Road	Pine Hall Road Landfill	
	Stanley, NC 28164	Duke Energy – Belews Creek Steam Station	
	Email: Fred@earnhardtgrading.com	Belews Creek, North Carolina	

Submittal Log ID No.: 005	Revision No.: 00	Contractor Transmittal No.: EGI-005, Revision 001
Specification Section: 03480	Date of Submittal Report: 06/16/11	
Submittal Subject: Pre-Cast Concrete Structures		

Notations:
- ☐ No Exception Taken
- ☐ Corrected as Noted
- ☐ Rejected
- ☐ Revise and Resubmit
- ☐ Submit Specified Items
- ☒ As Noted Herein

Remarks:

The information submitted for the two pre-cast concrete perimeter drain junction boxes is generally consistent with project specifications and Detail 8 on Drawing D1. Please note that the aluminum grating dimensions and reinforcement were revised from the original transmittal based on verbal correspondence at the June 15, 2011 construction meeting.

Attachments:
EGI Transmittal No. 005, Revision 001

Review of this submittal does not relieve the Contractor from their responsibility for deviations from the Contract Documents nor from their responsibility for errors or omissions in the submittal. Contractor is, and Engineer is not, responsible for matters relating to fabrication, shipping, handling, storage, assembly, installation, construction (including safety), and coordination for performing the Work.

6/20/11		6/20/11	
Engineer of Record	**Date**	**Prepared by**	**Date**
Kenneth Daly, P.E.		Kyle Baucom, E.I.	

Copies to:
- ☒ David Grogg, Duke Energy
- ☒ Kim Benson, Duke Energy
- ☐
- ☒ S&ME File No. 1356-07-017-05
- ☐
- ☐

Earnhardt Grading, Inc

7525 Old Plank Rd
Stanley, North Carolina 28164

Phone: 704-601-4290
Fax: 704-601-4295

Project: Belews Creek Cap Repair

Submittal: BC Cap 005
Revision # 001

To: S&ME, Inc.
9751 Southern Pines Blvd
Charlotte, North Carolina 28273
Attn: Ken Daly

ENCLOSED

- [X] Drawings
- [ ] Specifications
- [ ] Samples
- [ ] Submittal Data
- [ ] Letter
- [ ] Photographs
- [ ] Brochure

SEPARATE [ ]

COVER

Note:
- ___ Copies for job use in final approved form
- ___ Sample of material required to be submitted
- X Submitt

SUBMITTED FOR:

- [X] Approval
- [ ] Comment
- [ ] Your Use
- [ ] Color Selection
- [ ] _____
- [ ] _____
- [ ] _____

RETURNED:

- [ ] Approved
- [ ] Approved as Noted
- [ ] Corrected
- [ ] Resubmit for Approval Corrected
- [ ] Construction May Proceed Resubmit Corrected
- [ ] Disapproved

ITEMS IDENTIFIED AS FOLLOWS

Drawing	Qty	Date	Descritption
PD-1 Model	1	6/16/2011	Drainage Structure 1
PD-2 Model	1	6/16/2011	Drainage Structure 2

Remarks: _____

Earnhardt Grading, Inc

By

Fred L Brown

Belews Creek

PD-1

Side View

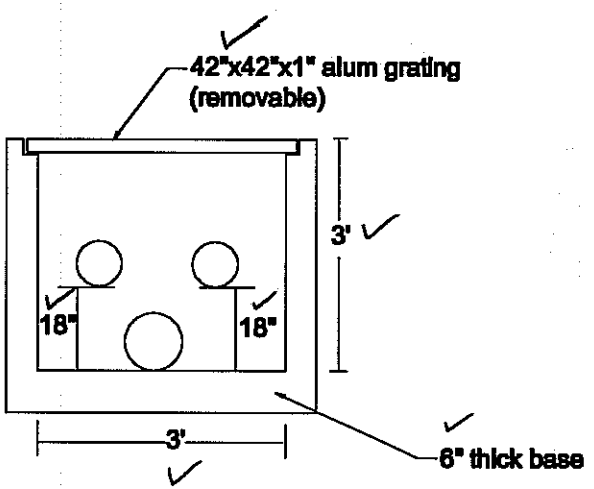

Top View

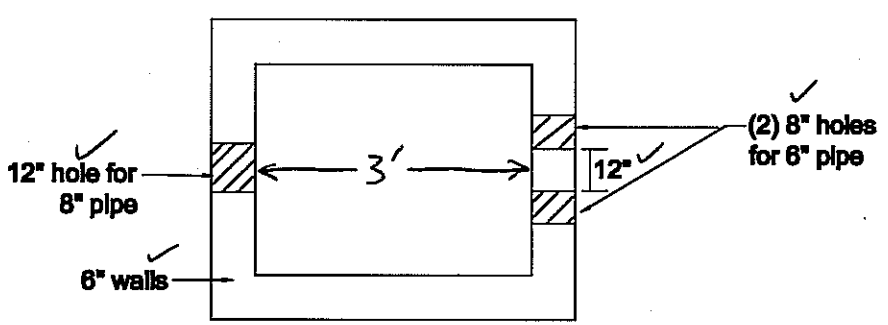

Notes:
- all concrete used to be min 4000 psi @ 28 days
- all reinforcement to be #5 rebar 12" o.c.e.w. in base slab and W4 x W4 wwf in vertical walls with wwf lapped 6" on to rebars (in accordance with NCDOT Std. 840.45)
- box will weigh approximately 4,300 lbs

DELLINGER PRECAST 800.948.1666

Customer: Earnhardt Grading
Job Name: Belews Creek
Date: 6-15-11

NPCA CERTIFIED PLANT

KB

Belews Creek

PD-2

Side View

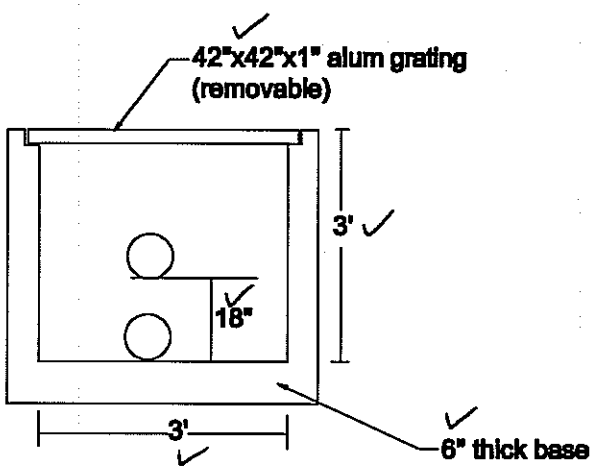

Top View

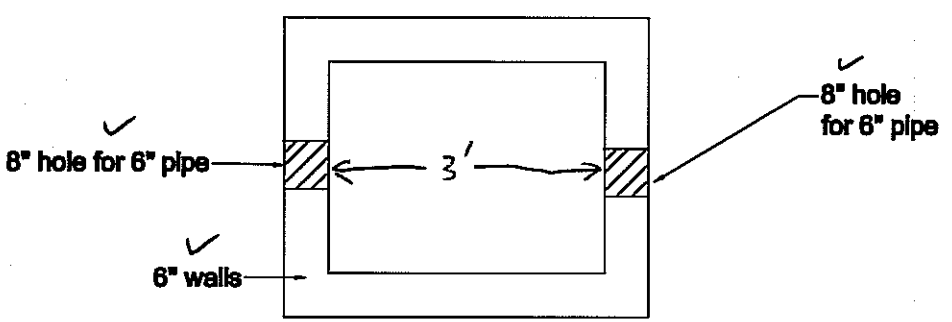

Notes:
- all concrete used to be min 4000 psi @ 28 days
- all reinforcement to be #5 rebar 12" o.c.e.w. in base slab and W4 x W4 wwf in vertical walls with wwf lapped 6" on to rebars (in accordance with NCDOT Std. 840.45)
- box will weigh approximately 4,300 lbs

DELLINGER PRECAST 800.948.1666

Customer: Earnhardt Grading
Job Name: Belews Creek
Date: 6-13-11

NPCA CERTIFIED PLANT

KB

STATE OF
NORTH CAROLINA
DEPT. OF TRANSPORTATION
DIVISION OF HIGHWAYS
RALEIGH, N.C.

7-06

ENGLISH STANDARD DRAWING FOR

PRECAST DRAINAGE STRUCTURE

(SOLID AND WAFFLE WALL)

SHEET 1 OF 2

840.45

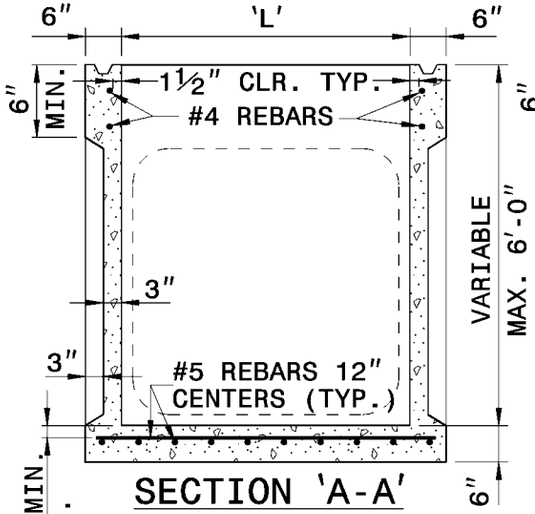

SECTION 'A-A'

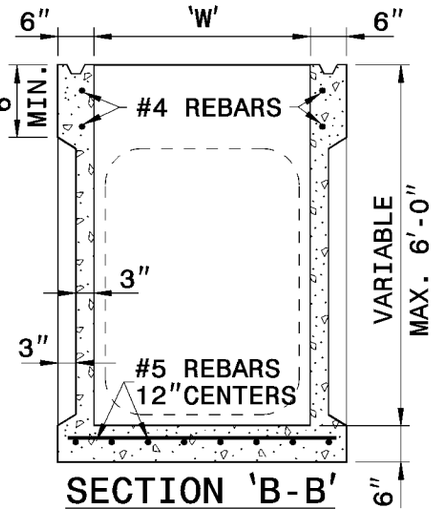

SECTION 'B-B'

THE PATTERN OF THE KNOCK-OUT PANELS ARE SHOWN FOR ILLUSTRATIVE PURPOSES ONLY.

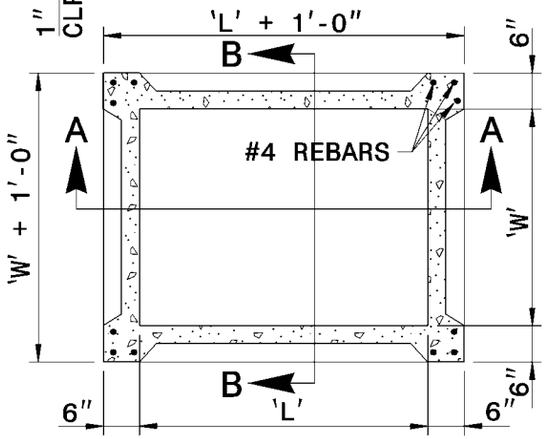

WAFFLE WALL PLAN VIEW

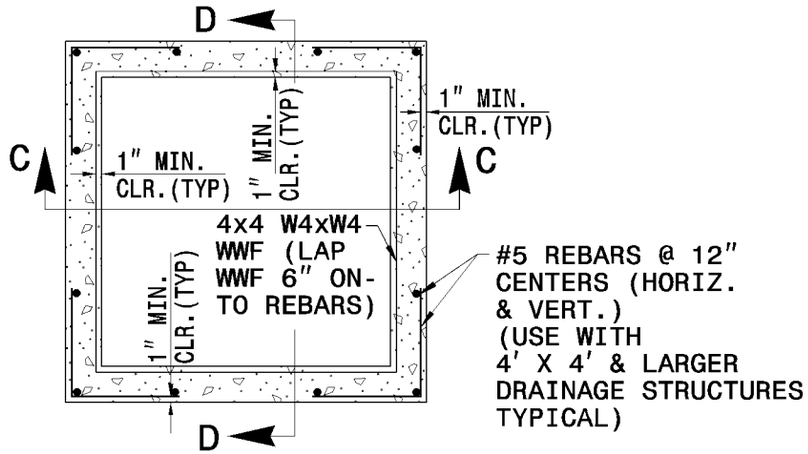

SOLID WALL PLAN VIEW

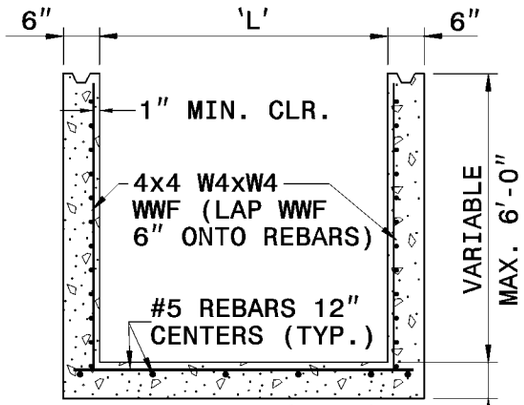

SECTION 'C-C'

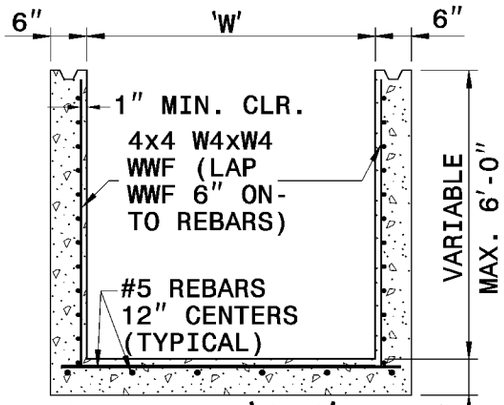

SECTION 'D-D'

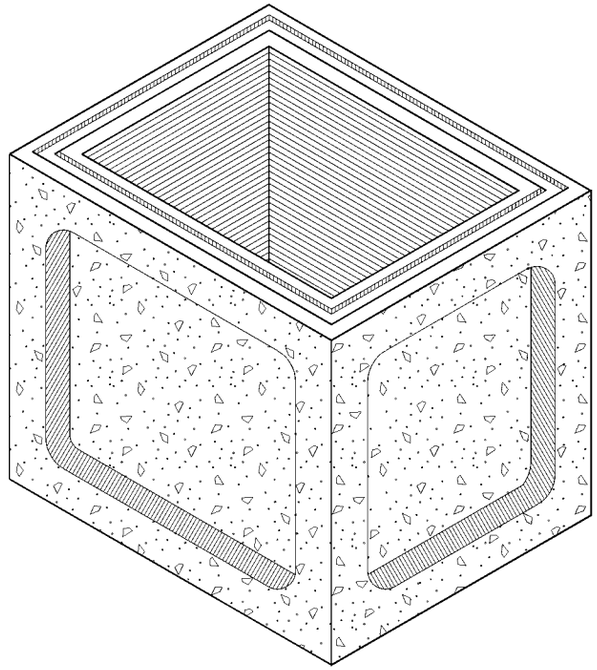

WAFFLE WALL ISOMETRIC VIEW

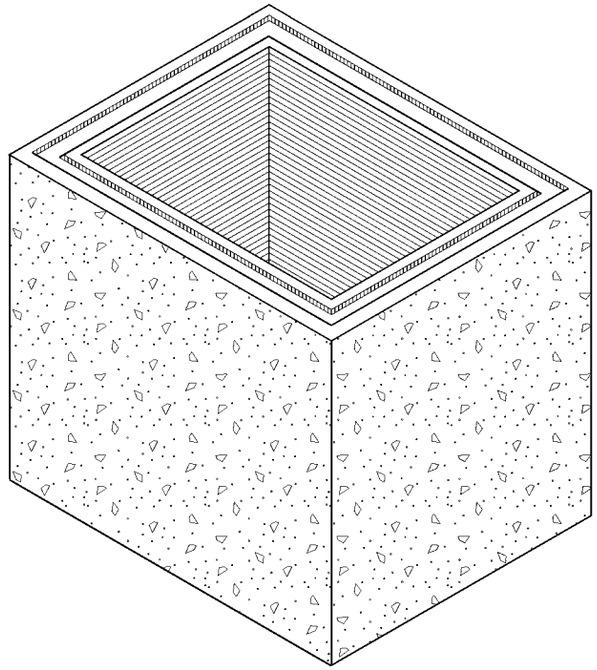

SOLID WALL ISOMETRIC VIEW

STATE OF
NORTH CAROLINA
DEPT. OF TRANSPORTATION
DIVISION OF HIGHWAYS
RALEIGH, N.C.

7-06

ENGLISH STANDARD DRAWING FOR

PRECAST DRAINAGE STRUCTURE

(SOLID AND WAFFLE WALL)

SHEET 1 OF 2

840.45

STATE OF NORTH CAROLINA
DEPT. OF TRANSPORTATION
DIVISION OF HIGHWAYS
RALEIGH, N.C.

7-06

ENGLISH STANDARD DRAWING FOR

PRECAST DRAINAGE STRUCTURE

(GENERAL NOTES AND DETAILS)

GENERAL NOTES:

* THIS PRECAST BOX MAY BE USED FOR THE FOLLOWING STANDARDS: 840.01, 840.02, 840.04, 840.05, 840.11, 840.12, 840.14, 840.15, 840.17, 840.18, 840.19, 840.26, 840.27, 840.28, 840.31, 840.32 AND 840.41.
* INSTALL PRECAST DRAINAGE STRUCTURES AND PAY FOR IN ACCORDANCE WITH SPECIFICATION SECTION 840.
* DO NOT PLACE PRECAST DRAINAGE STRUCTURES UNDER TRAFFIC OR WHERE TRAFFIC WILL BE DETOURED.
* USE 4000 PSI CONCRETE.
* PROVIDE ALL REINFORCING STEEL WHICH MEETS ASTM A615 FOR GRADE 60 AND WELDED WIRE FABRIC CONFORMING TO ASTM A185.
* LIMIT MAXIMUM DEPTH TO TOP OF BOTTOM SLAB FOR WAFFLE WALL STRUCTURE TO 10'-0"; LIMIT SOLID WALL STRUCTURE TO 15'-0".
* PLACE LIFT HOLES OR PINS IN ACCORDANCE WITH OSHA STANDARD 1926.704.
* CUT OR FORM OPENINGS FOR PIPE TO PROVIDE REQUIRED SIZE AND LOCATION. ORIENT WAFFLE WALL STRUCTURES SO THAT PIPES ENTER THROUGH THE KNOCKOUT/WAFFLE PANELS ONLY. PIPES MAY ENTER THROUGH THE CORNERS OF SOLID WALL BOXES IF A MINIMUM OF 6" OF WALL IS PROVIDED ABOVE THE HOLE.
* ALL ELEMENTS PRECAST TO MEET ASTM C913.
* FRAME AND GRATE HEIGHT MAY BE ADJUSTED WITH CONCRETE OR BRICK IN ACCORDANCE WITH STANDARD 840.25.
* PROVIDE PRECAST STRUCTURES OVER 4'-0" IN DEPTH WITH STEPS AS DIRECTED BY THE ENGINEER.
* WELDED WIRE FABRIC MAY BE SUBSTITUTED FOR REBAR AS LONG AS THE SAME AREA OF STEEL IS PROVIDED.
* SEAL JOINTS WITH A FLEXIBLE BUTYL RUBBER BASE CONFORMING TO FEDERAL SPECIFICATION SS-S-21A, AASHTO M-198, TYPE B - BUTYL RUBBER.
* LIMIT MAXIMUM STRUCTURE SIZE TO INSIDE CLEAR DIMENSIONS OF 5'-0" X 5'-0".
* THE OUTSIDE PIPE DIAMETER PLUS 2" OR THE OPENING REQUIRED FOR FRAME AND GRATE IS THE MINIMUM STRUCTURE SIZE WHICHEVER IS GREATER.
* USE MANHOLE FRAME AND COVER AS INDICATED ON THE PLANS. REINFORCE OPENING AS SHOWN ON THIS SHEET.

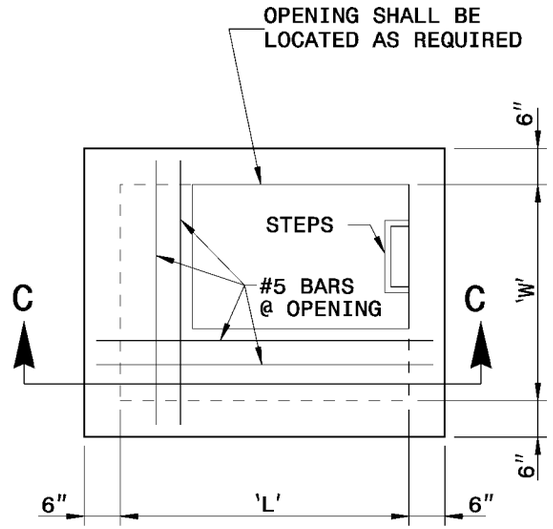

PLAN TOP SLAB

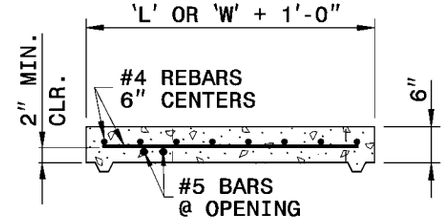

SECTION 'C-C'

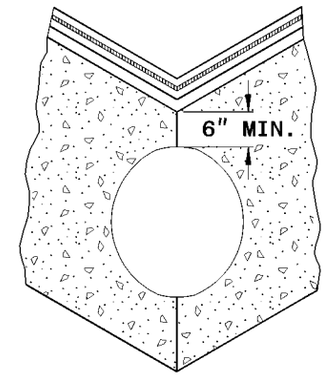

CORNER CUT DETAIL (SOLID WALL BOX)

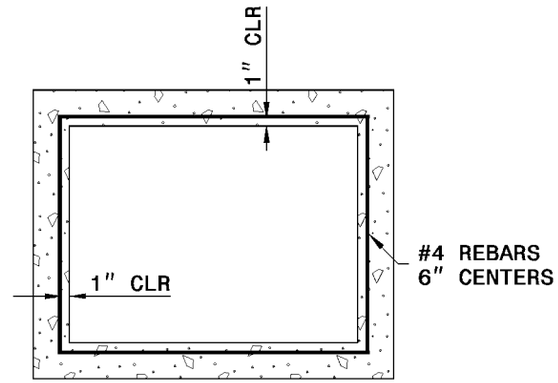

PRECAST RISER PLAN

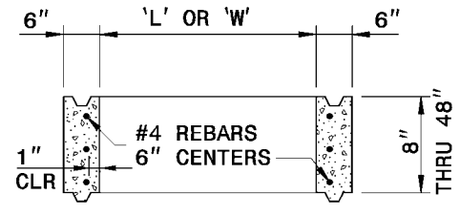

PRECAST RISER DETAIL

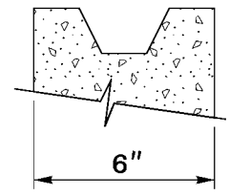

SECTION VIEW

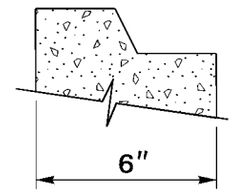

SECTION VIEW

OPTIONAL JOINT DETAILS

STATE OF NORTH CAROLINA
DEPT. OF TRANSPORTATION
DIVISION OF HIGHWAYS
RALEIGH, N.C.

7-06

ENGLISH STANDARD DRAWING FOR

PRECAST DRAINAGE STRUCTURE

(GENERAL NOTES AND DETAILS)

SHEET 2 OF 2
840.45

S&ME

SUBMITTAL COVER SHEET

TO:	Fred L. Brown	**Date: 06/20/11**	**Job No.: 1356-07-017-05**
ADDRESS:	Earnhardt Grading, Inc.	Cover System Retrofit	
	7525 Old Plank Road	Pine Hall Road Landfill	
	Stanley, NC 28164	Duke Energy – Belews Creek Steam Station	
	Email: Fred@earnhardtgrading.com	Belews Creek, North Carolina	

Submittal Log ID No.: 006	Revision No.: 00	Contractor Transmittal No.: EGI-006
Specification Section: 02500	Date of Submittal Report: 06/16/11	
Submittal Subject: HDPE Piping		

Notations:
- ☐ No Exception Taken
- ☐ Corrected as Noted
- ☐ Rejected
- ☐ Revise and Resubmit
- ☐ Submit Specified Items
- ☒ As Noted Herein

Remarks:

The information submitted for the ADS water-tight fittings is generally consistent with project specifications. The ADS water-tight couplers are approved for use as a replacement for the mar mac couplers specified in Detail 14 on Drawing D3.

Attachments:
EGI Transmittal No. 006

Review of this submittal does not relieve the Contractor from their responsibility for deviations from the Contract Documents nor from their responsibility for errors or omissions in the submittal. Contractor is, and Engineer is not, responsible for matters relating to fabrication, shipping, handling, storage, assembly, installation, construction (including safety), and coordination for performing the Work.

6/20/11	6/20/11
Engineer of Record **Date**	**Prepared by** **Date**
Kenneth Daly, P.E.	Kyle Baucom, E.I.

Copies to:
- ☒ David Grogg, Duke Energy
- ☒ Kim Benson, Duke Energy
- ☐
- ☒ S&ME File No. 1356-07-017-05
- ☐
- ☐

Earnhardt Grading, Inc

7525 Old Plank Rd
Stanley, North Carolina 28164

Phone: 704-601-4290
Fax: 704-601-4295

Project: Belews Creek Cap Repair

Submittal: BC Cap 006
Revision # 000

To: S&ME, Inc.
9751 Southern Pines Blvd
Charlotte, North Carolina 28273
Attn: Ken Daly

ENCLOSED

- [X] Drawings
- [ ] Specifications
- [ ] Samples
- [ ] Submittal Data
- [ ] Letter
- [ ] Photographs
- [ ] Brochure

SEPARATE [ ]

COVER

Note:
- ___ Copies for job use in final approved form
- ___ Sample of material required to be submitted
- X Submitt

SUBMITTED FOR:

- [X] Approval
- [ ] Comment
- [ ] Your Use
- [ ] Color Selection
- [ ] _____
- [ ] _____
- [ ] _____

RETURNED:

- [ ] Approved
- [ ] Approved as Noted
- [ ] Corrected
- [ ] Resubmit for Approval Corrected
- [ ] Construction May Proceed Resubmit Corrected
- [ ] Disapproved

ITEMS IDENTIFIED AS FOLLOWS

Drawing	Qty	Date	Descritption
	1	6/16/2011	ADS Water Tight Fitting

Remarks: _____

Earnhardt Grading, Inc

By _____

Fred L Brown

Small Diameter N-12® Pipe and Fittings

New line of pipe and fittings results in a water-tight or soil-tight HDPE piping system from 4" through 60".

Completing the HDPE system

Until now, specifiers have been forced to switch to other materials in pipe diameters under 15" to get soil- or water-tight performance. And, until now, the most commonly specified material for small-diameter drainage has been SDR-35 PVC pipe.

Now, ADS offers you a new line of 4" through 12" N-12® pipe and injection molded fittings* for maximum integrity in drainage service. This means that all the economy and performance benefits you've come to trust in polyethylene pipe can now be enjoyed in a complete 4" through 60" system.

The advantages of polyethylene

The superiority of HDPE over metal and concrete pipe has been well documented in the lab and in the field. But polyethylene also has some significant benefits over PVC pipe in smaller diameter applications:

- **Better impact strength.** HDPE is less brittle than PVC, particularly in cooler temperatures. N-12 survives the impact of rocks in the backfill and the rigors of cold weather handling.
- **No edge beveling.** N-12 pipe installs more quickly because there is no need to bevel the pipe edge when making the joint.
- **No special adapters.** With an all-polyethylene system, there is no requirement for special adapter fittings to join N-12 pipe to other materials.
- **Better chemical and abrasion resistance.** HDPE is virtually unaffected by acidic and alkaline solutions as well as by soil hydrocarbons.

** Injection molded fittings are not compatible with single wall corrugated HDPE pipe.*

Applications

The new line of small diameter pipe and fittings makes possible a complete drainage system from the top of the building to the storm sewer.

- Roof drains
- Foundation lines
- Collector pipe
- Roadway edge drains
- Construction site dewatering

Complete product selection

ADS offers a full complement of injection molded fittings (not welded fabrications) in 4" through 12" sizes. These fittings are available in both water-tight models which include an F477 gasket for attaching to the spigot end of the pipe, and soil-tight styles with cleats in the bells of the fittings.

The complete line, with item numbers, sizes, and the fabricated fittings they replace, is shown on page 2. ***Some Reducers, Tees and Wyes require a two-piece field assembly. These are described on page 3.***

ADS®

Injection Molded Fittings Selection

WATER-TIGHT FITTINGS
(Includes F477 gasket for attachment on pipe end)

Coupler, Bell/Bell

Size	Item Number	Replaces
4"	0413WT	S35 10.8
6"	0613WT	S35 10.8
8"	0813WT	S35 10.8

Reducing Coupler, Bell/Bell

Size	Item Number	Replaces
6" x 4"	0614WT	0670AN
8" x 4"	0814WT	0870AN
8" x 6"	0816WT	0871AN
10" x 4"	1074WT*	–
10" x 6"	1076WT*	–
10" x 8"	1018WT	1072AN
12" x 4"	1274WT*	–
12" x 6"	1276WT*	–
12" x 8"	1218WT	1272AN
12" x 10"	1210WT	1273AN

Reducing Coupler, Spigot/Bell

Size	Item Number	Replaces
6" x 4"	0674WT	–
8" x 4"	0874WT	–
8" x 6"	0876WT	–

Tee, Bell/Bell

Size	Item Number	Replaces
4"	0460WT	0460AN
6" x 4"	0660WT*	–
6"	0661WT	0661AN
8" x 4"	0860WT*	–
8" x 6"	0861WT*	–
8"	0862WT	0862AN
10" x 4"	1060WT*	1060AN
10" x 6"	1061WT*	1061AN
10" x 8"	1062WT	1062AN
10"	1063WT	1063AN
12" x 4"	1260WT*	1260AN
12" x 6"	1261WT*	1261AN
12" x 8"	1262WT	1262AN
12" x 10"	1263WT**	–
12"	1264WT	1264AN

Wye, Bell/Bell

Size	Item Number	Replaces
4"	0480WT	0480AN
6" x 4"	0680WT*	–
6"	0681WT	0681AN
8" x 4"	0880WT*	–
8" x 6"	0881WT*	–
8"	0882WT	0882AN
10" x 4"	1080WT*	1080AN
10" x 6"	1081WT*	1081AN
10" x 8"	1082WT	1082AN
10"	1083WT	1083AN
12" x 4"	1280WT*	1280AN
12" x 6"	1281WT*	1281AN
12" x 8"	1282WT	1282AN
12" x 10"	1283WT**	–
12"	1284WT	1284AN

Tee-Wye, Bell/Bell

Size	Item Number	Replaces
8" x 6"	0836WT	0836DAN

45° Elbow, Bell/Bell

Size	Item Number	Replaces
4"	0494WT	0490AN
6"	0694WT	0694AN
8"	0894WT	0894AN
10"	1094WT	1094AN
12"	1294WT	1297AN

90° Elbow, Bell/Bell

Size	Item Number	Replaces
4"	0499WT	0499AN
6"	0699WT	0699AN
8"	0899WT	0899AN
10"	1099WT	1099AN
12"	1299WT	1298AN

SOIL-TIGHT FITTINGS
(Cleated bells)

Tee, Bell/Bell

Size	Item Number	Replaces
4"	0460ST	0460AN
6" x 4"	0660ST*	–
6"	0661ST	0661AN
8" x 4"	0860ST*	–
8" x 6"	0861ST*	–
8"	0862ST	0862AN
10" x 4"	1060ST*	1060AN
10" x 6"	1061ST*	1061AN
10" x 8"	1062ST	1062AN
10"	1063ST	1063AN
12" x 8"	1262ST	1262AN
12" x 10"	1263ST**	–
12"	1264ST	1264AN

Wye, Bell/Bell

Size	Item Number	Replaces
4"	0480ST	0480AN
6" x 4"	0680ST*	–
6"	0681ST	0681AN
8" x 4"	0880ST*	–
8" x 6"	0881ST*	–
8"	0882ST	0882AN
10" x 8"	1082ST	1082AN
10"	1083ST	1083AN
12" x 8"	1282ST	1282AN
12" x 10"	1283ST**	–
12"	1284ST	1284AN

45° Elbow, Bell/Bell

Size	Item Number	Replaces
4"	0494ST	0494AN
6"	0694ST	0694AN
8"	0894ST	0894AN
10"	1094ST	1094AN
12"	1294ST	1297AN

90° Elbow, Bell/Bell

Size	Item Number	Replaces
4"	0499ST	0499AN
6"	0699ST	0699AN
8"	0899ST	0899AN
10"	1099ST	1099AN
12"	1299ST	1298AN

* Shipped as two injection molded fittings. See page 3.

** 12" x 10" Tees and Wyes require about 15" of 12" N-12 pipe to join the injection molded fittings. See page 3.

Reducing Fittings

Some of the injection molded Reducers, Tees and Wyes require field assembly of two parts, as shown in the table below.

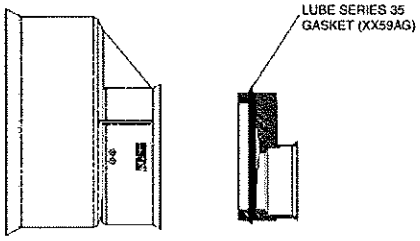

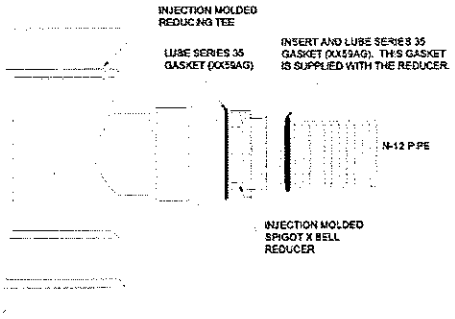

Fitting (Bell/Bell)	Water-Tight Fittings		Soil-Tight Fittings	
	Item No.	Consists of:	Item No.	Consists of:
Reducer, 10" x 4"	1074WT	1018WT 10 x 8 Reducer + 0874WT 8 x 4 Reducer	–	
Reducer, 10" x 6"	1076WT	1018WT 10 x 8 Reducer + 0876WT 8 x 6 Reducer	–	
Reducer, 12" x 4"	1274WT	1218WT 12 x 8 Reducer + 0874WT 8 x 4 Reducer	–	
Reducer, 12" x 6"	1276WT	1218WT 12 x 8 Reducer + 0876WT 8 x 6 Reducer	–	
Tee, 6" x 4"	0660WT	0661WT 6" Tee + 0674WT 6" x 4" Reducer	0660ST	0661ST 6" Tee + 0674WT 6" x 4" Reducer
Tee, 8" x 4"	0860WT	0862WT 8" Tee + 0874WT 8" x 4" Reducer	0860ST	0862ST 8" Tee + 0874WT 8" x 4" Reducer
Tee, 8" x 6"	0861WT	0862WT 8" Tee + 0876WT 8" x 6" Reducer	0861ST	0862ST 8" Tee + 0876WT 8" x 6" Reducer
Tee, 10" x 4"	1060WT	1062WT 10" X 8" Tee + 0874WT 8" x 4" Reducer	1060ST	1062ST 10 X 8 Tee + 0874WT 8 x 4 Reducer
Tee, 10" x 6"	1061WT	1062WT 10" X 8" Tee + 0876WT 8" x 6" Reducer	1061ST	1062ST 10 X 8 Tee + 0876WT 8 x 6 Reducer
Tee, 12" x 4"	1260WT	1262WT 12" X 8" Tee + 0874WT 8" x 4" Reducer	–	
Tee, 12" x 6"	1261WT	1262WT 12" X 8" Tee + 0876WT 8" x 6" Reducer	–	
Tee, 12" x 10" *[1]	1263WT*	1264WT 12" Tee + 1210WT 12" x 10" Reducer	1263ST*	1264ST 12" Tee + 1210WT 12" x 10" Reducer
Wye, 6" x 4"	0680WT	0681WT 6" Wye + 0674WT 6" x 4" Reducer	0680ST	0681ST 6" Wye + 0674WT 6" x 4" Reducer
Wye, 8" x 4"	0880WT	0882WT 8" Wye + 0874WT 8" x 4" Reducer	0880ST	0882ST 8" Wye + 0874WT 8" x 4" Reducer
Wye, 8" x 6"	0881WT	0882WT 8" Wye + 0876WT 8" x 6" Reducer	0881ST	0882ST 8" Wye + 0876WT 8" x 6" Reducer
Wye, 10" x 4"	1080WT	1082WT 10" x 8" Wye +0874WT 8" x 4" Reducer	–	
Wye, 10" x 6"	1081WT	1082WT 10" x 8" Wye +0876WT 8" x 6" Reducer	–	
Wye, 12" x 4"	1280WT	1282WT 12" x 8" Wye +0874WT 8" x 4" Reducer	–	
Wye, 12" x 6"	1281WT	1282WT 12" x 8" Wye +0876WT 8" x 6" Reducer	–	
Wye, 12" x 10" *	1283WT*	1284WT 12" Wye + 1210WT 12" x 10" Reducer	1283ST*	1284ST 12" Wye +1210WT 12" x 10" Reducer

*** 12" x 10" Reducing Tee or Wye (WT or ST)**

1. ***12" x 10" Tee:*** order 1264 (WT or ST) 12" x 12" Tee, 1210WT 12" x 10" Bell/Bell Reducer, and approximately 15" of 12" diameter N-12 pipe to make the connection between the two bell ends.
2. ***12" x 10" Wye:*** order 1284 (WT or ST) 12" x 12" Wye, 1210WT 12" x 10" Bell/Bell Reducer, and approximately 15" of 12" diameter N-12 pipe to make the connection between the two bell ends.

[1] Additional pipe stub not shipped with item number, order this pipe separately

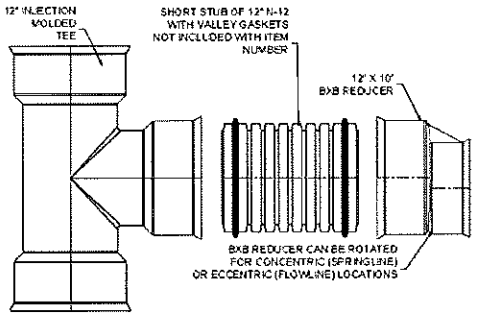

Installation

Soil-Tight Connection to N-12 IB Pipe
Push home the spigot end of the N-12 IB pipe until the cleats on the fitting bell lock into the second or third valley of the pipe. If joining to the bell end of N-12 IB pipe, cut off the bell. For 12" N-12 IB pipe, the mini-corrugations will need to be removed prior to joining.

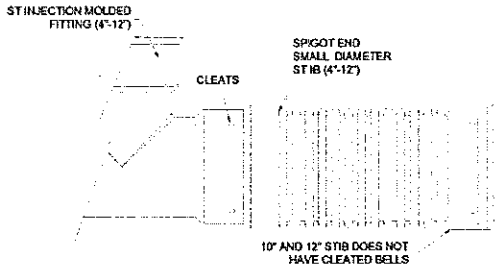

Soil-Tight Connection to Plain End N-12 Pipe
Push home the plain end of the N-12 pipe until the cleats on the fitting bell lock into the second or third valley of the pipe.

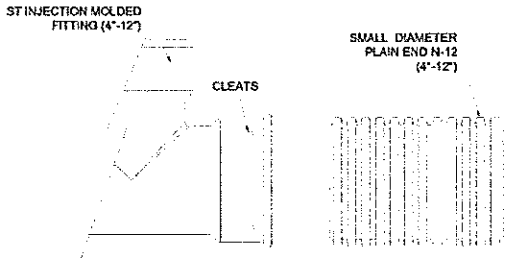

Water-Tight Connection to N-12 IB Pipe
Insert the Series 35 gasket (XX59AG) in the first valley of the plain end of the N-12 IB pipe. Lube the gasket and the bell end of the injection molded fitting. Holding the fitting, push home the pipe end for a secure connection. For 12" N-12 IB pipe, the mini-corrugations will need to be removed prior to joining with a valley gasket installed on the end.

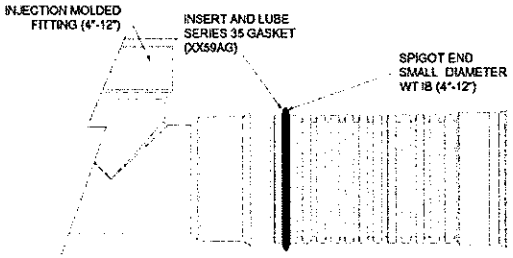

Water-Tight Connection to Plain End N-12 Pipe
Insert the Series 35 gasket (XX59AG) in the first valley of the plain end of the N-12 pipe. Lube the gasket and the bell end of the injection molded fitting. Holding the fitting, push home the pipe end for a secure connection.

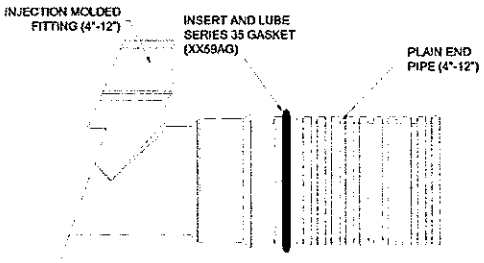

THE MOST ADVANCED NAME IN DRAINAGE SYSTEMS®

ADS
ADVANCED DRAINAGE SYSTEMS, INC.
4640 TRUEMAN BLVD., HILLIARD, OH 43026
800-821-6710 www.ads-pipe.com

© 2005 Advanced Drainage Systems, Inc.
© The Green Stripe is registered in the U.S. Patent and Trademark Office.

S&ME

SUBMITTAL COVER SHEET

TO:	Fred L. Brown	**Date: 06/22/11**	**Job No.: 1356-07-017-05**
ADDRESS:	Earnhardt Grading, Inc.	Cover System Retrofit	
	7525 Old Plank Road	Pine Hall Road Landfill	
	Stanley, NC 28164	Duke Energy – Belews Creek Steam Station	
	Email: Fred@earnhardtgrading.com	Belews Creek, North Carolina	

Submittal Log ID No.: 007	Revision No.: 00	Contractor Transmittal No.: EGI-007
Specification Section: 02500	Date of Submittal Report: 06/20/11	
Submittal Subject: HDPE Piping		

Notations:
- ☐ No Exception Taken
- ☐ Corrected as Noted
- ☐ Rejected
- ☐ Revise and Resubmit
- ☐ Submit Specified Items
- ☒ As Noted Herein

Remarks:

The information submitted for the HDPE pipe connection to the pre-cast concrete perimeter drain junction boxes is generally consistent with project specifications and Note 4 on Detail 8 on Drawing D1.

Attachments:
EGI Transmittal No. 007

Review of this submittal does not relieve the Contractor from their responsibility for deviations from the Contract Documents nor from their responsibility for errors or omissions in the submittal. Contractor is, and Engineer is not, responsible for matters relating to fabrication, shipping, handling, storage, assembly, installation, construction (including safety), and coordination for performing the Work.

Engineer of Record Kenneth Daly, P.E.	**Date** 6/22/11	**Prepared by** Kyle Baucom, E.I.	**Date** 6/22/11

Copies to:
- ☒ David Grogg, Duke Energy
- ☒ Kim Benson, Duke Energy
- ☐
- ☒ S&ME File No. 1356-07-017-05
- ☐
- ☐

Earnhardt Grading, Inc

7525 Old Plank Rd
Stanley, North Carolina 28164

Phone: 704-601-4290
Fax: 704-601-4295

Project: Belews Creek Cap Repair

Submittal: BC Cap 007
Revision # 000

To: S&ME, Inc.
9751 Southern Pines Blvd
Charlotte, North Carolina 28273
Attn: Ken Daly

ENCLOSED

- [X] Drawings
- [ ] Specifications
- [ ] Samples
- [X] Submittal Data
- [ ] Letter
- [ ] Photographs
- [ ] Brochure

SEPARATE [ ]

COVER

Note: ___ Copies for job use in final approved form

___ Sample of material required to be submitted

X Submitt

SUBMITTED FOR:

- [X] Approval
- [ ] Comment
- [ ] Your Use
- [ ] Color Selection
- [ ] _____
- [ ] _____
- [ ] _____

RETURNED:

- [ ] Approved
- [ ] Approved as Noted
- [ ] Corrected
- [ ] Resubmit for Approval Corrected
- [ ] Construction May Proceed Resubmit Corrected
- [ ] Disapproved

ITEMS IDENTIFIED AS FOLLOWS

Drawing	Qty	Date	Descritption
ADS 202-A	1	6/20/2011	HDPE to Precast Box Connection
	1	6/20/2011	Proselect Grout

Remarks:

Earnhardt Grading, Inc

By

Fred L Brown

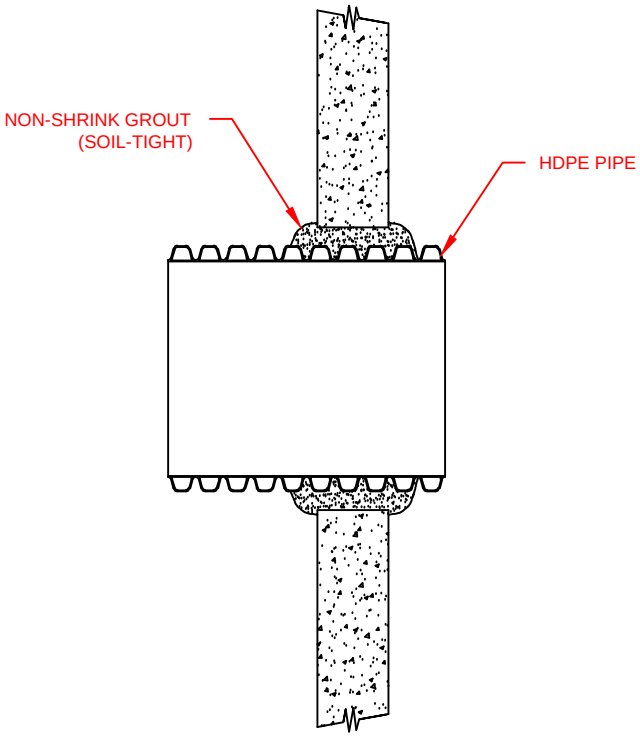

TYPE 1: SOIL-TIGHT USING NON-SHRINK
GROUT AND CORRUGATED PIPE

SEE STANDARD DETAIL STD-201 AND TECHNICAL
NOTE: 5.04 HDPE CONNECTIONS TO MANHOLES AND STRUCTURES
FOR INSTALLATION RECOMMENDATIONS.

É 2007 ADS, INC.

REV.	DESCRIPTION	BY	MM/DD/YY	CHK'D
1	UPDATED DRAWING	TJR	02/20/07	CKS

ADVANCED DRAINAGE SYSTEMS, INC. ("ADS") HAS PREPARED THIS DETAIL BASED ON INFORMATION PROVIDED TO ADS. THIS DRAWING IS INTENDED TO DEPICT THE COMPONENTS AS REQUESTED. ADS HAS NOT PERFORMED ANY ENGINEERING OR DESIGN SERVICES FOR THIS PROJECT, NOR HAS ADS INDEPENDENTLY VERIFIED THE INFORMATION SUPPLIED. THE INSTALLATION DETAILS PROVIDED HEREIN ARE GENERAL RECOMMENDATIONS AND ARE NOT SPECIFIC FOR THIS PROJECT. THE DESIGN ENGINEER SHALL REVIEW THESE DETAILS PRIOR TO CONSTRUCTION. IT IS THE DESIGN ENGINEERS RESPONSIBILITY TO ENSURE THE DETAILS PROVIDED HEREIN MEETS OR EXCEEDS THE APPLICABLE NATIONAL, STATE, OR LOCAL REQUIREMENTS AND TO ENSURE THAT THE DETAILS PROVIDED HEREIN ARE ACCEPTABLE FOR THIS PROJECT.

SOIL–TIGHT STRUCTURE CONNECTION TYPE 1 DETAIL

DRAWING NUMBER: STD–202A

ADS
ADVANCED DRAINAGE SYSTEMS, INC.
4640 TRUEMAN BLVD
HILLIARD, OHIO 43026

DRAWN BY:	BRV
DATE:	9/15/06
CK'D BY:	
SCALE:	NTS
SHEET	1 OF 1

PROSELECT™

Product Specifications

PROSELECT HYDRAULIC PLUG CEMENT

PSHYD

Description

PROSELECT hydraulic cement is a fast setting, expansive cement. It is compounded to withstand continual exposure to water even under pressure. Sets rapidly for emergency repairs with minimal downtime.

Uses

- Industrial, commercial, & residential applications above or below grade.
- Stops water flow through cracks and holes in existing masonry surfaces.
- Repairs leaks in sewer pipes, basements, & manholes.
- Emergency repairs of ruptured concrete water pipes.
- Not for use as a traffic bearing repair mortar or a structural or machine bearing grout.

Part Numbers

PSHYD1GALREG	1 Gallon 10# pail regular set hydraulic cement
PSHYD5GALREG	5 Gallon 50# pail regular set hydraulic cement
PSHYD5GALFAS	5 Gallon 50# pail fast set hydraulic cement

Set times*

PSHYD****REG	4 to 6 minutes @ 70°F/21°C
PSHYD****FAS	60 to 90 seconds @ 70°F/21°C

*Set times can vary with ambient temperature and/or water temperature

Technical Data

Compressive Strength ASTM C 109		
Time	**Fast Set**	**Regular Set**
1 hour	1645 psi	970 psi
1 day	3045 psi	1717 psi
7 days	5226 psi	2794 psi

Flexural Strength ASTM C 348		
Time	**Fast Set**	**Regular Set**
7 days	402 psi	533 psi
14 days	489 psi	625 psi
21 days	560 psi	860 psi

Tensil Strength ASTM C 307		
Time	**Fast Set**	**Regular Set**
7 days	195 psi	196 psi

Usage & Storage

PROSELECT Hydraulic cement sets up quickly; prepare only enough for immediate use. Store unused powder in its original container, off the floor, & in a dry place

Distributed exclusively by Ferguson and Wolseley Canada

©2010 Ferguson Enterprises, Inc. All Rights Reserved

S&ME

SUBMITTAL COVER SHEET

TO:	Fred L. Brown	**Date: 06/22/11**	**Job No.: 1356-07-017-05**
ADDRESS:	Earnhardt Grading, Inc.	Cover System Retrofit	
	7525 Old Plank Road	Pine Hall Road Landfill	
	Stanley, NC 28164	Duke Energy – Belews Creek Steam Station	
	Email: Fred@earnhardtgrading.com	Belews Creek, North Carolina	

Submittal Log ID No.: 008	Revision No.: 00	Contractor Transmittal No.: EGI-008
Specification Section: 02060	Date of Submittal Report: 06/20/11	
Submittal Subject: Aggregate		

Notations:
- ☐ No Exception Taken
- ☐ Corrected as Noted
- ☐ Rejected
- ☐ Revise and Resubmit
- ☐ Submit Specified Items
- ☒ As Noted Herein

Remarks:

The modified Proctor information submitted for the Type A1 (aggregate base course stone) is generally consistent with project specifications.

Attachments:
EGI Transmittal No. 008

Review of this submittal does not relieve the Contractor from their responsibility for deviations from the Contract Documents nor from their responsibility for errors or omissions in the submittal. Contractor is, and Engineer is not, responsible for matters relating to fabrication, shipping, handling, storage, assembly, installation, construction (including safety), and coordination for performing the Work.

6/22/11		6/22/11	
Engineer of Record	**Date**	**Prepared by**	**Date**
Kenneth Daly, P.E.		Kyle Baucom, E.I.	

Copies to:
- ☒ David Grogg, Duke Energy
- ☒ Kim Benson, Duke Energy
- ☐
- ☒ S&ME File No. 1356-07-017-05
- ☐
- ☐

Earnhardt Grading, Inc

7525 Old Plank Rd
Stanley, North Carolina 28164

Phone: 704-601-4290
Fax: 704-601-4295

Project: Belews Creek Cap Repair

Submittal: BC Cap 008
Revision # 000

To: S&ME, Inc.
9751 Southern Pines Blvd
Charlotte, North Carolina 28273
Attn: Ken Daly

ENCLOSED

- [X] Drawings
- [ ] Specifications
- [ ] Samples
- [X] Submittal Data
- [ ] Letter
- [ ] Photographs
- [ ] Brochure

SEPARATE [ ]

COVER

Note: ___ Copies for job use in final approved form

___ Sample of material required to be submitted

X Submitt

SUBMITTED FOR:

- [X] Approval
- [ ] Comment
- [ ] Your Use
- [ ] Color Selection
- [ ] _____
- [ ] _____
- [ ] _____

RETURNED:

- [ ] Approved
- [ ] Approved as Noted
- [ ] Corrected
- [ ] Resubmit for Approval Corrected
- [ ] Construction May Proceed Resubmit Corrected
- [ ] Disapproved

ITEMS IDENTIFIED AS FOLLOWS

Drawing	Qty	Date	Descritption
	1	6/20/2011	Modified Proctor Curve for Type A-1 material

Remarks:

Earnhardt Grading, Inc

By

Fred L Brown

North Carolina Department of Transportation

AGGREGATE BASE COURSE DENSITY

The most recent Aggregate Base Course (ABC) unit weight test results performed by the NCDOT M&T Soils lab can be queried using this page. Use the drop down boxes to select the company and/or quarry submitting the sample. To see the results of all tests, click on the "Search" button without specifying a company or quarry.

Vulcan Materials | Stokesdale Quarry | Search

Quarry Code	Quarry Name	Quarry Owner	Density (pcf)	Density (kg/cu.m.)	Optimum Moist.(%)	Date	Lab Number	Inspector Name
0076	Stokesdale Quarry	Vulcan Materials	142.0	2,274.8	5.2	4/29/2011	769550	Westmoreland, B.

S&ME

SUBMITTAL COVER SHEET

TO:	Fred L. Brown	**Date: 06/28/11**	**Job No.: 1356-07-017-05**
ADDRESS:	Earnhardt Grading, Inc.	Cover System Retrofit	
	7525 Old Plank Road	Pine Hall Road Landfill	
	Stanley, NC 28164	Duke Energy – Belews Creek Steam Station	
	Email: Fred@earnhardtgrading.com	Belews Creek, North Carolina	

Submittal Log ID No.: 009	Revision No.: 00	Contractor Transmittal No.: EGI-009
Specification Section: 02674	Date of Submittal Report: 06/22/11	
Submittal Subject: Nonwoven Geotextiles		

Notations:
- ☐ No Exception Taken
- ☐ Corrected as Noted
- ☐ Rejected
- ☐ Revise and Resubmit
- ☐ Submit Specified Items
- ☒ As Noted Herein

Remarks:

The MQC test results for the 180 EX (8 oz/yd^2) and 250 EX (10.5 oz/yd^2) nonwoven geotextiles meet or exceed the minimum testing frequency specified in Table 02674-A and meet or exceed the minimum values specified in Table 02674-B. The 250 EX (10.5 oz/yd^2) nonwoven geotextile may be substituted for the previously approved 245 EX (10 oz/yd^2) nonwoven geotextile.

Attachments:
EGI Transmittal No. 009
Thrace-LINQ 250EX Nonwoven Geotextile Product Data Sheet
IFC Specifications, Tables 02674-A and 02674-B

Review of this submittal does not relieve the Contractor from their responsibility for deviations from the Contract Documents nor from their responsibility for errors or omissions in the submittal. Contractor is, and Engineer is not, responsible for matters relating to fabrication, shipping, handling, storage, assembly, installation, construction (including safety), and coordination for performing the Work.

Kenneth R. Daly	6/28/11	Kyle Baucom	6/28/11
Engineer of Record	**Date**	**Prepared by**	**Date**
Kenneth Daly, P.E.		Kyle Baucom, E.I.	

Copies to:
- ☒ David Grogg, Duke Energy
- ☒ Kim Benson, Duke Energy
- ☐
- ☒ S&ME File No. 1356-07-017-05
- ☐
- ☐

Earnhardt Grading, Inc

7525 Old Plank Rd
Stanley, North Carolina 28164

Phone: 704-601-4290
Fax: 704-601-4295

Project: Belews Creek Cap Repair

Submittal: BC Cap 009
Revision # 000

To: S&ME, Inc.
9751 Southern Pines Blvd
Charlotte, North Carolina 28273
Attn: Ken Daly

ENCLOSED

- [ ] Drawings
- [ ] Specifications
- [ ] Samples
- [X] Submittal Data
- [ ] Letter
- [ ] Photographs
- [ ] Brochure

SEPARATE COVER [ ]

Note:
- ___ Copies for job use in final approved form
- ___ Sample of material required to be submitted
- X Submitt

SUBMITTED FOR:

- [X] Approval
- [ ] Comment
- [ ] Your Use
- [ ] Color Selection
- [ ] _____
- [ ] _____
- [ ] _____

RETURNED:

- [ ] Approved
- [ ] Approved as Noted
- [ ] Corrected
- [ ] Resubmit for Approval Corrected
- [ ] Construction May Proceed Resubmit Corrected
- [ ] Disapproved

ITEMS IDENTIFIED AS FOLLOWS

Drawing	Qty	Date	Descritption
	1	6/22/2011	Thrace - LINQ 180 EX MQC Results
	1	6/22/2011	Thrace - LINQ 250 EX MQC Results

Remarks: _____

Earnhardt Grading, Inc

By _____
Fred L Brown

Thrace-LINQ
MEMBER THRACE GROUP

Geosynthetic QA Line: 1-800-543-9966
Fax: 1-843-875-8276
Website: www.thracelinq.com
E-Mail: qa@thracelinq.com

May 5, 2011

Ferguson Waterworks
6511 Stateville Rd.
Charlotte NC 28269

Ref: Order # 10030260
P.O. # G1638-3391

Dear Sir or Madam:

This letter is to certify that Style **180EX**, a nonwoven polypropylene fabric supplied by Thrace-LINQ, Inc., meets the fabric properties listed below:

PROPERTY	*TEST PROCEDURE*	*METRIC*		*ENGLISH*	
		MARV		MARV	
Grab Tensile Strength	ASTM D-4632	912	N	205	lbs
Grab Elongation	ASTM D-4632	50	%	50	%
Trapezoid Tear	ASTM D-4533	356	N	80	lbs
Puncture (CBR)	ASTM D-6241	2380	N	535	lbs
Permittivity	ASTM D-4491	1.5	sec^{-1}	1.5	sec^{-1}
A.O.S.	ASTM D-4751	0.150	mm	100	U.S. Sieve
UV Stability (500 hrs)	ASTM D-4355	70	%	70	%
Water Flow Rate	ASTM D-4491	4482	lpm/m^2	110	gpm/ft^2

MARV: Minimum Average Roll Value
Apparent Opening Size (AOS) properties are Maximum Average Roll Values

Sincerely,

James H. Brown Jr.

James H. Brown Jr.
Quality & Technical Manager

Updated on February 15, 2010

Thrace-LINQ™
MEMBER THRACE GROUP

Geosynthetic QA Line: 800-543-9966
2550 West Fifth North Street
Summerville, SC, USA 29483-9699

Phone: 800-445-4675 Fax: 843-875-8276
www.thracelinq.com
E-Mail: qa@thracelinq.com

NON WOVEN ACTUAL ROLL DATA

Date 6/21/11 Style 180EX Order # 10030260 PO # G1638-3391 Roll Width 180

MD: Machine Direction (WARP) CD: Cross Direction (FILL)

180"/12" = 15'

Finished Roll Number	Date Tested	MD Grab Tensile ASTM (lbs)	CD Grab Tensile ASTM (lbs)	MD Grab Elongation ASTM (%)	CD Grab Elongation ASTM (%)	MD Trap Tear ASTM D4533 (lbs)	CD Trap Tear ASTM D4533 (lbs)	CBR Puncture ASTM D6241 (lbs)	AOS ASTM D4751 (U.S. sieve)	Water Flow Rate ASTM D4491 gpm/ft2	Permeability ASTM D4491 cm/sec	Permittivity ASTM D4491 (sec-1)
8068190	5/2/11	248 ✓	262 ✓	67 ✓	70 ✓	90 ✓	94 ✓	777 ✓	100 ✓	186 ✓	0.59	2.5 ✓
8068195	5/2/11	248	262	67	70	90	94	777	100	186	0.59	2.5
8068197	5/2/11	248	262	67	70	90	94	777	100	186	0.59	2.5
8068201	5/2/11	217 ✓	260 ✓	69 ✓	68 ✓	101 ✓	109 ✓	675 ✓	100 ✓	186 ✓	0.59	2.5 ✓
8068203	5/2/11	217	260	69	68	101	109	675	100	186	0.59	2.5
8068204	5/2/11	217	260	69	68	101	109	675	100	186	0.59	2.5
8068207	5/2/11	217	260	69	68	101	109	675	100	186	0.59	2.5
8068208	5/2/11	217	260	69	68	101	109	675	100	186	0.59	2.5
8068211	5/2/11	217	260	69	68	101	109	675	100	186	0.59	2.5
8068213	5/2/11	217	260	69	68	101	109	675	100	186	0.59	2.5
8068215	5/2/11	217	260	69	68	101	109	675	100	186	0.59	2.5
8068218	5/2/11	217	260	69	68	101	109	675	100	186	0.59	2.5
8068219	5/2/11	217	260	69	68	101	109	675	100	186	0.59	2.5
8068221	5/2/11	217	260	69	68	101	109	675	100	186	0.59	2.5
8068223	5/2/11	217	260	69	68	101	109	675	100	186	0.59	2.5
8068224	5/2/11	217	260	69	68	101	109	675	100	186	0.59	2.5
8068229	5/2/11	217	260	69	68	101	109	675	100	186	0.59	2.5
8068231	5/2/11	217	260	69	68	101	109	675	100	186	0.59	2.5
8068232	5/2/11	217	260	69	68	101	109	675	100	186	0.59	2.5
8068234	5/2/11	217	260	69	68	101	109	675	100	186	0.59	2.5
8068235	5/2/11	217	260	69	68	101	109	675	100	186	0.59	2.5
8068236	5/2/11	217	260	69	68	101	109	675	100	186	0.59	2.5
8068246	5/2/11	227 ✓	259 ✓	68 ✓	65 ✓	85 ✓	101 ✓	694 ✓	100 ✓	186 ✓	0.59	2.5 ✓
8068283	5/2/11	227	259	68	65	85	101	694	100	186	0.59	2.5

24 rolls × 15' × 300' = 108,000 ft² → 2 tests required, 3 test performed ✓

KB

Thrace-LINQ
MEMBER THRACE GROUP

Geosynthetic QA Line: 1-800-543-9966
Fax: 1-843-875-8276
Website: www.thracelinq.com
E-Mail: qa@thracelinq.com

May 31, 2011

Ferguson Waterworks # 1638
6511 Stateville Rd.
Charlotte NC 28269

Re: Order # 10030474
PO # G1638-3978-1

Dear Sir or Madam: 10.5 oz/yd²

This letter is to certify that Style 250EX, a nonwoven polypropylene fabric supplied by Thrace-LINQ, Inc., meets the fabric properties listed below:

PROPERTY	*TEST PROCEDURE*	*METRIC*		*ENGLISH*	
		MARV		MARV	
Grab Tensile Strength	ASTM D-4632	1202	N	✓270	lbs
Grab Elongation	ASTM D-4632	50	%	✓ 50	%
Trapezoid Tear	ASTM D-4533	445	N	✓100	lbs
Puncture (CBR)	ASTM D-6241	3226	N	725	lbs
Permittivity	ASTM D-4491	1.2	sec^{-1}	1.2	sec^{-1}
A.O.S.	ASTM D-4751	0.15	mm	✓100	U.S. Sieve
UV Stability (500 hrs)	ASTM D-4355	70	%	✓ 70	%
Water Flow Rate	ASTM D-4491	3463	lpm/m^2	85	gpm/ft^2

MARV: Minimum Average Roll Value
Apparent Opening Size (AOS) properties are Maximum Average Roll Values

Sincerely,

James H. Brown Jr.
Quality & Technical Manager

Updated on February 15, 2010

KB

Thrace-LINQ™
MEMBER THRACE GROUP

Geosynthetic QA Line: 800-543-9966
2550 West Fifth North Street
Summerville, SC, USA 29483-9699

Phone: 800-445-4675 Fax: 843-875-8276
www.thracelinq.com
E-Mail: qa@thracelinq.com

NON WOVEN ACTUAL ROLL DATA

Date 6/21/11 **Style** 250EX **Order #** 10030474 **PO #** G1638-3978 **Width** 180

MD: Machine Direction (WARP) **CD:** Cross Direction (FILL)

Finished Roll Number	Date Tested	MD Grab Tensile ASTM (lbs)	CD Grab Tensile ASTM (lbs)	MD Grab Elongation ASTM (%)	CD Grab Elongation ASTM (%)	MD Trap Tear ASTM D4533 (lbs)	CD Trap Tear ASTM D4533 (lbs)	CBR Puncture ASTM D6241 (lbs)	AOS ASTM D4751 (U.S. sieve)	Water Flow Rate ASTM D4491 gpm/ft2	Permeability ASTM D4491 cm/sec	Permittivity ASTM D4491 (sec-1)
8071090R	6/9/11	298 ✓	321 ✓	68 ✓	67 ✓	112 ✓	128 ✓	1022 ✓	100 ✓	140 ✓	0.52	1.9 ✓
8072642	5/13/11	286 ✓	359 ✓	70 ✓	80 ✓	118 ✓	155 ✓	908 ✓	100 ✓	127 ✓	0.48	1.7 ✓

KB

Thrace-LINQ
MEMBER THRACE GROUP

Geosynthetic QA Line: 1-800-543-9966
Fax: 1-843-875-8276
Website: www.thracelinq.com
E-Mail: qa@thracelinq.com

June 16, 2011

Ferguson Waterworks # 1638
6511 Stateville Rd.
Charlotte NC 28269

Re: Order # 10030555
PO # G1638-4340

Dear Sir or Madam:

This letter is to certify that Style **250EX**, a nonwoven polypropylene fabric supplied by Thrace-LINQ, Inc., meets the fabric properties listed below:

PROPERTY	*TEST PROCEDURE*	*METRIC*		*ENGLISH*	
		MARV		MARV	
Grab Tensile Strength	ASTM D-4632	1202	N	270	lbs
Grab Elongation	ASTM D-4632	50	%	50	%
Trapezoid Tear	ASTM D-4533	445	N	100	lbs
Puncture (CBR)	ASTM D-6241	3226	N	725	lbs
Permittivity	ASTM D-4491	1.2	sec^{-1}	1.2	sec^{-1}
A.O.S.	ASTM D-4751	0.15	mm	100	U.S. Sieve
UV Stability (500 hrs)	ASTM D-4355	70	%	70	%
Water Flow Rate	ASTM D-4491	3463	lpm/m^2	85	gpm/ft^2

MARV: Minimum Average Roll Value
Apparent Opening Size (AOS) properties are Maximum Average Roll Values

Sincerely,

James H. Brown Jr.
Quality & Technical Manager

Updated on February 15, 2010

Thrace-LINQ™
MEMBER THRACE GROUP

Geosynthetic QA Line: 800-543-9966
2550 West Fifth North Street
Summerville, SC, USA 29483-9699

Phone: 800-445-4675 Fax: 843-875-8276
www.thracelinq.com
E-Mail: qa@thracelinq.com

NON WOVEN ACTUAL ROLL DATA

Date 6/21/11 Style 250EX Order # 10030555 PO # G1638-4340 Width 180

MD: Machine Direction (WARP) CD: Cross Direction (FILL)

180"/12" = 15'

Finished Roll Number	Date Tested	MD Grab Tensile ASTM (lbs)	CD Grab Tensile ASTM (lbs)	MD Grab Elongation ASTM (%)	CD Grab Elongation ASTM (%)	MD Trap Tear ASTM D4533 (lbs)	CD Trap Tear ASTM D4533 (lbs)	CBR Puncture ASTM D6241 (lbs)	AOS ASTM D4751 (U.S. sieve)	Water Flow Rate ASTM D4491 gpm/ft2	Permeability ASTM D4491 cm/sec	Permittivity ASTM D4491 (sec-1)
8082853	6/9/11	278 ✓	328 ✓	64 ✓	68 ✓	104 ✓	120 ✓	933 ✓	100 ✓	129 ✓	0.44	1.8 ✓
8082856	6/9/11	278	328	64	68	104	120	933	100	129	0.44	1.8
8082857	6/9/11	278	328	64	68	104	120	933	100	129	0.44	1.8
8082862	6/9/11	278	328	64	68	104	120	933	100	129	0.44	1.8

6 rolls x 15' x 300' = 27,000 ft² → 1 test required, 3 tests performed

KB

Thrace-LINQ™
MEMBER THRACE GROUP

Product Data Sheet

250EX

A non-woven geotextile fabric supplied by Thrace-LINQ, Inc., is manufactured from Polypropylene staple fiber. The fibers are randomly oriented and form a cohesive / stabilized needle punched fabric for use in many applications, such as stabilization, filtration, permanent erosion control, etc. This fabric has been UV stabilized and is resistant to commonly encountered chemicals, mildew and insects found in soil.

PROPERTY	*TEST PROCEDURE*	*METRIC*		*ENGLISH*	
		MARV		**MARV**	
Grab Tensile Strength	ASTM D-4632	1202	N	✓270	lbs
Grab Elongation	ASTM D-4632	50	%	✓50	%
Trapezoid Tear	ASTM D-4533	445	N	✓100	lbs
CBR Puncture	ASTM D-6241	3226	N	725	lbs
UV Stability (500 hrs)	ASTM D-4355	70	%	✓70	%
Permittivity	ASTM D-4491	1.2	sec^{-1}	1.2	sec^{-1}
Water Flow Rate	ASTM D-4491	3463	lpm/m^2	85	gpm/ft^2
A.O.S.	ASTM D-4751	0.150	mm	✓100	U.S. Sieve

Notes:
- **Mullen Burst ASTM D3786 removed. Not recognized by ASTM D35 on Geosynthetics.**
- **Puncture ASTM D4833 is not recognized by AASHTO M288 and has been replaced with CBR Puncture ASTM D6241.**

PROPERTY	*TEST PROCEDURE*	*METRIC*		*ENGLISH*	
		Typical		**Typical**	
Weight	ASTM D-5261	356	g/m^2	✓10.5	oz/yd^2
Thickness	ASTM D-5199	2.54	mm	100	mils

PACKAGING	*METRIC*			*ENGLISH*		
	AREA	**WIDTH**	**LENGTH**	**AREA**	**WIDTH**	**LENGTH**
Roll sizes	418 m^2	3.81 m	109.7 m	500 yd^2	12.5'	360'
	418 m^2	4.57 m	91.4 m	500 yd^2	15'	300'

Physical properties reflect industry standards. Roll Data may reflect higher values than those listed above.

This information relates to the specific material designated and may not be valid for such material used in combination with any other materials or in any process. Such information is, to the best of our knowledge and belief, accurate and reliable as of the date compiled. However, no representation, warranty or guarantee is made as to its accuracy, reliability or completeness. It is the user's responsibility to satisfy himself or herself as to the suitability and completeness of such information for his or her own particular use. We do not accept liability for any loss or damage that may occur from the use of this information, nor do we offer any warranty against infringement.

LINQ and the Thrace-LINQ emblem are registered trademarks of Thrace-LINQ, Inc.

KB

2. Where material properties vary among the machine and cross-machine directions, the MARV shall apply to the direction providing the lowest value (when a minimum is specified) or the highest value (when a maximum value is specified).

B. The geotextiles provided by the supplier shall be stock products.

C. The geotextile shall be:
1. Nonwoven, needlepunched, continuous filament polyester material; or
2. Nonwoven, needlepunched, continuous filament polypropylene material; or
3. Nonwoven, needlepunched, polypropylene staple or continuous fiber material.

D. The geotextile shall be manufactured from first quality virgin polymer.

E. The supplier shall not furnish products specifically manufactured to meet the specifications of this project unless authorized by the Owner and Engineer.

F. In addition to the property values listed in Table 02674-B, the geotextiles shall:
1. Retain its structure during handling, placement, and long-term service.
2. Be capable of withstanding outdoor exposure for a minimum of 30 days with no measurable deterioration.

TABLE 02674-A
GEOTEXTILE REQUIRED PHYSICAL PRE-SHIPPING TESTING

PROPERTY	TEST METHOD	MINIMUM FREQUENCY
Mass Per Unit Area	ASTM D5261	Every 100,000 ft^2
Grab Tensile Strength	ASTM D4632	Every 100,000 ft^2
Grab Tensile Elongation	ASTM D4632	Every 100,000 ft^2
Trapezoid Tear Strength	ASTM D4533	Every 100,000 ft^2
Mullen Burst Strength	ASTM D3786	Every 100,000 ft^2
Puncture Strength	ASTM D4833	Every 100,000 ft^2
Apparent Opening Size (AOS)	ASTM D4751	1 per production lot (filter geotextiles only)
Permeability	ASTM D4491	1 per production lot (filter geotextiles only)
UV Resistance(3)	ASTM D4355	1 per production lot

TABLE 02674-B
GEOTEXTILE REQUIRED PHYSICAL AND HYDRAULIC PROPERTIES

PROPERTIES AND REQUIREMENTS[1,2]	UNITS	SPECIFIED VALUES 6 oz.	SPECIFIED VALUES 8 oz.	SPECIFIED VALUES 10 oz.	SPECIFIED VALUES 12 oz.	TEST METHOD
Type	---	Nonwoven	Nonwoven	Nonwoven	Nonwoven	---
Mass Per Unit Area	oz/yd^2	6.0	8.0	10.0	12.0	ASTM D5261
Grab Tensile Strength	lb	160	200	230	300	ASTM D4632
Grab Tensile Elongation	%	50	50	50	50	ASTM D4632
Trapezoid Tear Strength	lb	65	80	95	115	ASTM D4533
Mullen Burst Strength	lb/in^2	310	380	520	550	ASTM D3786
Puncture Strength	lb	85	110	120	140	ASTM D4833
Apparent Opening Size (AOS)	US Sieve/ mm	70/0.212	80/0.18	100/0.15	100/0.15	ASTM D4751
Permeability	cm/sec	0.25	0.3	0.3	0.3	ASTM D4491
UV Resistance[3]	% strength retained	70	70	70	70	ASTM D4355

Notes:
(1) All values represent minimum average roll values (i.e., any roll in a lot should meet or exceed the values in this table) except for UV resistance, which is a minimum value.
(2) Polymer composition of 95 % polypropylene or polyester by weight
(3) Evaluation to be on 2.0 inch strip tensile specimen after 500 hours of exposure.

2.2 ACCESSORIES

A. Sewing materials: Types recommended by manufacturer for sewing seams in geotextile.

PART 3 EXECUTION

3.1 EXAMINATION

A. Prior to implementing any geotextile work, the Geosynthetic Installer shall carefully inspect the subgrade and verify that all work is complete to the point where the installation of the geotextile may properly commence without adverse impact.

B. If the Contractor has any concerns regarding the installed work, the Engineer and/or Owner shall be notified in writing within 48-hours of his site inspection. Failure to inform the Engineer and/or Owner in writing or installation of the geotextile will be construed as Contractor's acceptance of all prior related work.

C. Any geotextile that does not comply with Table 02674-B of this Section 02674 shall be rejected and replaced with new material in accordance with the Specifications, at no additional cost to Owner.

3.2 PREPARATION

A. Prior to implementing any of the work described in this Section 02674, the Geosynthetic Installer shall become thoroughly familiar with all portions of the work within this Section 02674 or related work, as necessary for successful completion of the Work.

S&ME

SUBMITTAL COVER SHEET

TO:	Fred L. Brown	**Date: 06/28/11**	**Job No.: 1356-07-017-05**
ADDRESS:	Earnhardt Grading, Inc.	Cover System Retrofit	
	7525 Old Plank Road	Pine Hall Road Landfill	
	Stanley, NC 28164	Duke Energy – Belews Creek Steam Station	
	Email: Fred@earnhardtgrading.com	Belews Creek, North Carolina	

Submittal Log ID No.: 010	Revision No.: 00	Contractor Transmittal No.: EGI-010
Specification Section: 02673	Date of Submittal Report: 06/28/11	
Submittal Subject: Woven Geotextiles		

Notations:
- ☐ No Exception Taken
- ☐ Corrected as Noted
- ☐ Rejected
- ☐ Revise and Resubmit
- ☐ Submit Specified Items
- ☒ As Noted Herein

Remarks:

The MQC test results for the GTF 300 woven geotextile meet or exceed the minimum testing frequency specified in Table 02673-A and meet or exceed the minimum values specified in Table 02673-B.

Attachments:
EGI Transmittal No. 010
Thrace-LINQ GTF 300 Woven Geotextile Product Data Sheet
IFC Specifications, Tables 02673-A and 02673-B

Review of this submittal does not relieve the Contractor from their responsibility for deviations from the Contract Documents nor from their responsibility for errors or omissions in the submittal. Contractor is, and Engineer is not, responsible for matters relating to fabrication, shipping, handling, storage, assembly, installation, construction (including safety), and coordination for performing the Work.

Engineer of Record Kenneth Daly, P.E.	6/28/11 **Date**	**Prepared by** Kyle Baucom, E.I.	6/28/11 **Date**

Copies to:
- ☒ David Grogg, Duke Energy
- ☒ Kim Benson, Duke Energy
- ☐
- ☒ S&ME File No. 1356-07-017-05
- ☐
- ☐

Earnhardt Grading, Inc

7525 Old Plank Rd
Stanley, North Carolina 28164

Phone: 704-601-4290
Fax: 704-601-4295

Project: Belews Creek Cap Repair

Submittal: BC Cap 010
Revision # 000

To: S&ME, Inc.
9751 Southern Pines Blvd
Charlotte, North Carolina 28273
Attn: Ken Daly

ENCLOSED

- [ ] Drawings
- [ ] Specifications
- [ ] Samples
- [x] Submittal Data
- [ ] Letter
- [ ] Photographs
- [ ] Brochure

SEPARATE COVER [ ]

Note:
- ___ Copies for job use in final approved form
- ___ Sample of material required to be submitted
- X Submitt

SUBMITTED FOR:

- [x] Approval
- [ ] Comment
- [ ] Your Use
- [ ] Color Selection
- [ ] _____
- [ ] _____
- [ ] _____

RETURNED:

- [ ] Approved
- [ ] Approved as Noted
- [ ] Corrected
- [ ] Resubmit for Approval Corrected
- [ ] Construction May Proceed Resubmit Corrected
- [ ] Disapproved

ITEMS IDENTIFIED AS FOLLOWS

Drawing	Qty	Date	Descritption
	1	6/28/2011	Thrace - LINQ GTX-300 MQC Results

Remarks: _____

Earnhardt Grading, Inc

By _____
Fred L. Brown

Thrace-LINQ™
MEMBER THRACE GROUP

Geosynthetic QA Line: 800-543-9966
2550 West Fifth North Street
Summerville, SC, USA 29483-9699

Phone: 800-445-4675 Fax: 843-875-8276
www.thracelinq.com
E-Mail: qa@thracelinq.com

GEOTEXTILE ACTUAL ROLL DATA

Date 6/27/11 **Style** GTF-300 **Order #** 10030590 **PO #** G1638-4513 **Roll Width** 150

MD: Machine Direction (WARP) **CD**: Cross Direction (F **WW**: Wide Width

150"/12" = 12.5'

Roll No	MD Grab Tensile (lbs) ASTM D4632	CD Grab Tensile (lbs) ASTM D4632	MD Grab Elongation (%) ASTM D4632	CD Grab Elongation (%) ASTM D4632	MD Trap Tear (lbs) ASTM D4533	CD Trap Tear (lbs) ASTM D4533	Permittivity (sec-1) ASTM D4491	Water Flow Rate (gal/min-ft2) D4491	MD WW (lbs) ASTM D4595	CD WW (lbs) ASTM D4595	MD WW Elongation (%) ASTM D4595	CD WW Elongation (%) ASTM D4595	AOS US Sieve ASTM D4751
8087158	350 ✓	320 ✓	24 ✓	15 ✓	120 ✓	125 ✓	0.05 ✓	4 ✓	243	266	26	18	50 ✓

1 roll x 12.5' x 432' = 5,400 ft² → 1 test required, 1 test performed ✓

KB

Thrace-LINQ™
MEMBER THRACE GROUP

Product Data Sheet
GTF 300

A woven geotextile fabric, produced from high-tenacity polypropylene slit-film. This high-modulus fabric is ideally suited for separation / stabilization applications. GTF 300 has been UV stabilized and packaged in conformance with ASTM D4873.

Mirafi 600X

PROPERTY	*TEST PROCEDURE*	*METRIC*		*ENGLISH*		
		MARV		MARV		
Grab Tensile Strength(W/F)	ASTM D-4632	1401	N	✓315	lbs	315
Grab Elongation	ASTM D-4632	15	%	✓ 15	%	12
Trapezoid Tear	ASTM D-4533	512	N	✓115	lbs	113
CBR Puncture	ASTM D-6241	4450	N	✓1000	lbs	900
UV Resistance (500 hrs)	ASTM D-4355	80	%	✓ 80	%	70
Permittivity	ASTM D-4491	0.050	sec^{-1}	✓0.050	sec^{-1}	0.05
Water Flow Rate	ASTM D-4491	163	lpm/m^2	✓ 4	gpm/ft^2	4
A.O.S.	ASTM D-4751	0.300	mm	✓ 50	U.S. Sieve	40

Notes:
- **✓Mullen Burst ASTM D3786 removed. Not recognized by ASTM D35 on Geosynthetics.**
- **✓Puncture ASTM D4833 is not recognized by AASHTO M288 and has been replaced with CBR Puncture ASTM D6241.**

PROPERTY	*TEST PROCEDURE*	*METRIC*		*ENGLISH*		
		Typical		Typical		
Weight	ASTM D-5261	231	g/m^2	✓ 6.8	oz/yd^2	6.0
Thickness	ASTM D-5199	0.711	mm	✓ 28	mils	25

PACKAGING	*METRIC*			*ENGLISH*		
	AREA	WIDTH	LENGTH	AREA	WIDTH	LENGTH
Roll sizes	501 m^2	3.81 m	131.6 m	600 yd^2	12.5'	432'
	501 m^2	4.57 m	109.7 m	600 yd^2	15'	360'
	501 m^2	5.33 m	94.1 m	600 yd^2	17.5'	309'

Physical properties reflect industry standards. Roll Data may reflect higher values than those listed above.

This information relates to the specific material designated and may not be valid for such material used in combination with any other materials or in any process. Such information is, to the best of our knowledge and belief, accurate and reliable as of the date compiled. However, no representation, warranty or guarantee is made as to its accuracy, reliability or completeness. It is the user's responsibility to satisfy himself or herself as to the suitability and completeness of such information for his or her own particular use. We do not accept liability for any loss or damage that may occur from the use of this information, nor do we offer any warranty against infringement.

LINQ and the Thrace-LINQ emblem are registered trademarks of Thrace-LINQ, Inc.

Thrace-LINQ, Inc 2550 West Fifth North St. Summerville, SC 29483 12/13/2010
1-800-445-4675

KB

PART 2 PRODUCTS

2.1 GEOTEXTILE

A. Woven geotextile shall be that which is specified on the Drawings. Unless otherwise noted on the Drawings, geotextile Suppliers shall furnish materials whose Minimum Average Roll Values meet or exceed the criteria specified in Table 02673-B. The Manufacturer shall provide test results for these procedures, as well as a certification that the material properties meet or exceed the specified values.

1. Minimum Average Roll Value (MARV) shall be based on Manufacturer's data and shall be calculated as the mean value of the property of interest plus or minus two standard deviations, as appropriate.
2. Where material properties vary among the machine and cross-machine directions, the MARV shall apply to the direction providing the lowest value (when a minimum is specified) or the highest value (when a maximum value is specified).

B. The geotextiles provided by the supplier shall be stock products.

C. The geotextile for the roadbase shall be woven geotextile comprised of 100 percent polypropylene or 100 percent polyester material.

D. The geotextile shall be manufactured from first quality virgin polymer.

E. The supplier shall not furnish products specifically manufactured to meet the Specifications of this project unless authorized by the Owner and Engineer.

TABLE 2673-A
GEOTEXTILE REQUIRED PHYSICAL PRE-SHIPPING TESTING

PROPERTY	TEST METHOD	MINIMUM FREQUENCY
Grab Tensile Strength	ASTM D4632	Every 100,000 ft^2
Grab Tensile Elongation	ASTM D4632	Every 100,000 ft^2
Trapezoid Tear Strength	ASTM D4533	Every 100,000 ft^2
Mullen Burst Strength	ASTM D3786	Every 100,000 ft^2
Puncture Strength	ASTM D4833	Every 100,000 ft^2
Apparent Opening Size (AOS)	ASTM D4751	1 per production lot (filter geotextiles only)
Permittivity	ASTM D4491	1 per production lot (filter geotextiles only)
UV Resistance	ASTM D4355	1 per production lot

TABLE 2673-B
GEOTEXTILE REQUIRED PHYSICAL AND HYDRAULIC PROPERTIES

PROPERTIES AND REQUIREMENTS[1]	UNITS	TEST METHOD	MINIMUM SPECIFIED VALUES [1]
			Roadbase
Grab Tensile Strength	lb	ASTM D4632	315
Grab Tensile Elongation	%	ASTM D4632	15
Trapezoid Tear Strength	Lb	ASTM D4533	120
Mullen Burst Strength	lb/in^2	ASTM D3786	400
Puncture Strength	Lb	ASTM D4833	145
Apparent Opening Size (AOS)	US Sieve	ASTM D4751	40
Permeability	cm/sec	ASTM D4491	0.05
Flow Rate	(gpm/ft^2)	ASTM D4491	--
UV Resistance	% strength retained	ASTM D4355	70

Note:
(1) All values represent minimum average roll values (i.e., any roll in a lot should meet or exceed the values in this table) except for UV resistance, which is a minimum value.

PART 3 EXECUTION

3.1 EXAMINATION

A. Prior to implementing any geotextile work, the Installer shall carefully inspect the subgrade and verify that all work is complete to the point where the installation of the geotextile may properly commence without adverse impact.

B. If the Contractor has any concerns regarding the installed work, the Engineer and/or Owner shall be notified in writing within 48-hours of his site inspection. Failure to inform the Engineer and/or Owner in writing or installation of the geotextile will be construed as Contractor's acceptance of all prior related work.

C. Any geotextile that does not comply with Table 2673-B of this Section 02673 shall be rejected and replaced with new material in accordance with these Specifications, at no additional cost to Owner.

3.2 PREPARATION

A. Prior to implementing any of the work described in this Section 02673, the Installer shall become thoroughly familiar with all portions of the work within this Section 02673 or related work, as necessary for successful completion of the Work.

3.3 INSTALLATION

A. The Installer shall handle all geotextile in such a manner as to ensure they are not damaged in any way.

S&ME

SUBMITTAL COVER SHEET

TO:	Fred L. Brown	**Date: 07/07/11**	**Job No.: 1356-07-017-05**
ADDRESS:	Earnhardt Grading, Inc.	Cover System Retrofit	
	7525 Old Plank Road	Pine Hall Road Landfill	
	Stanley, NC 28164	Duke Energy – Belews Creek Steam Station	
	Email: Fred@earnhardtgrading.com	Belews Creek, North Carolina	

Submittal Log ID No.: 011	Revision No.: 00	Contractor Transmittal No.: EGI-011
Specification Section: 02672	Date of Submittal Report: 07/06/11	
Submittal Subject: Linear Low Density Polyethylene (LLDPE) Geomembrane		

Notations:
- [x] No Exception Taken
- [ ] Corrected as Noted
- [ ] Rejected
- [ ] Revise and Resubmit
- [ ] Submit Specified Items
- [ ] As Noted Herein

Remarks:

The MQC test results for the Microspike LLDPE geomembrane meet or exceed the minimum testing frequency specified in Table 02672-A and meet or exceed the minimum values specified in Table 02672-B.

Attachments:
EGI Transmittal No. 011
IFC Specifications, Tables 02672-A and 02672-B

Review of this submittal does not relieve the Contractor from their responsibility for deviations from the Contract Documents nor from their responsibility for errors or omissions in the submittal. Contractor is, and Engineer is not, responsible for matters relating to fabrication, shipping, handling, storage, assembly, installation, construction (including safety), and coordination for performing the Work.

7/7/11	7/7/11
Engineer of Record **Date**	**Prepared by** **Date**
Kenneth Daly, P.E.	Kyle Baucom, E.I.

Copies to:
- [x] David Grogg, Duke Energy
- [x] Kim Benson, Duke Energy
- [ ]
- [x] S&ME File No. 1356-07-017-05
- [x] Jamie Lineberger, Earnhardt Grading, Inc.
- [ ]

Earnhardt Grading, Inc
7525 Old Plank Rd
Stanley, North Carolina 28164

Phone: 704-601-4290
Fax: 704-601-4295

Project: Belews Creek Cap Repair

Submittal: BC Cap 011
Revision # 000

To: S&ME, Inc.
9751 Southern Pines Blvd
Charlotte, North Carolina 28273
Attn: Ken Daly

ENCLOSED

- [ ] Drawings
- [ ] Specifications
- [ ] Samples
- [x] Submittal Data
- [ ] Letter
- [ ] Photographs
- [ ] Brochure

SEPARATE COVER [ ]

Note:
___ Copies for job use in final approved form
___ Sample of material required to be submitted
X Submitt

SUBMITTED FOR:

- [x] Approval
- [ ] Comment
- [ ] Your Use
- [ ] Color Selection
- [ ] _____
- [ ] _____
- [ ] _____

RETURNED:

- [ ] Approved
- [ ] Approved as Noted
- [ ] Corrected
- [ ] Resubmit for Approval Corrected
- [ ] Construction May Proceed Resubmit Corrected
- [ ] Disapproved

ITEMS IDENTIFIED AS FOLLOWS

Drawing	Qty	Date	Descritption
	1	7/6/2011	Microspike LLDPE Liner Certificate (40 Mil)

Remarks:

Earnhardt Grading, Inc

By

Jamie Lineberger

agru america quality control dept.

quality certificate

ROLL # **318331-11** Lot #: **CAK811360** **Liner Type: MICROSPIKE™ LLDPE** ✓

Measurement ASTM D5994 (Modified)		METRIC		ENGLISH	
	MIN:	0.94	mm	37	mil
	MAX:	1.08	mm	43	mil
Asperity ASTM D7466: 26/29 mil TOP / BOTTOM	AVE:	1.01	mm	40	mil

Thickness.....	1.0	mm	40 mil ✓
Length.....	216.411	m	710.0 feet
Width.....	7.00	m;	23.0 feet

OIT(Standard) ASTM D3895 minutes 165

					TEST RESULTS
Specific Gravity ASTM D792	Density	g/cc			.935 ✓
MFI ASTM D1238 COND. E GRADE: 7104	Melt Flow Index 190°C /2160 g	g/10 min			.37
Carbon Black Content ASTM D4218	Range	%			2.34 ✓
Carbon Black Dispersion ASTM D5596	Category				10 In Cat 1 ✓
Tensile Strength ASTM D6693 ASTM D638 (Modified) (2 inches / minute)	Average Strength @ Break	21 N/mm	✓ 119 ppi		2,990 psi
Elongation ASTM D6693 ASTM D638 (Modified) (2 inches / minute) Lo = 1.3" Yield Lo = 2.0" Break	Average Elongation @ Break	%			485.9 ✓
Dimensional Stability ASTM D1204 (Modified)	Average Dimensional change	%			-0.48
Tear Resistance ASTM D-1004 (Modified)	Average Tear Resistance	140.0 N			31.476 lbs ✓
Puncture Resistance FTMS 101 Method 2065 (Modified)	Load	320.4 N			72.030 lbs
Puncture Resistance ASTM D4833 (Modified)	Load	415.0 N			93.306 lbs ✓
ESCR ASTM D1693	Minimum Hrs w/o Failures	1500 hrs			CERTIFIED

Customer: **Plastic Fusion**
PO: **P13509 Belews Creek**
Destination **Belews Creek, NC**

Date: 5-4-11

Signature: H Holmes

Quality Control Department

40LLmic.FRM
REV 02
12/23/05

KB

CoA Date: 10/22/2010

Certificate of Analysis

Shipped To: AGRU AMERICA INC
500 GARRISON RD
GEORGETOWN SC 29440
USA

Recipient: PALMER
Fax:

CPC Delivery #: 88149612
PO #: 5590
Weight: 186400 LB
Ship Date: 10/22/2010
Package: BULK
Mode: Hopper Car
Car #: CEFX054126
Seal No: 508898

Product: PE 7104 BULK

Lot Number: CAK811360

Property	Test Method	Value	Unit
Melt Index	ASTM D1238	0.37	g/10mi
HLMI	ASTM D1238	15.65	g/10mi
Pellet Count	ST-905	31	pel/g
Production date		20101021	
Density	D1505 or D4883	0.920	g/cm3

The data set forth herein have been carefully compiled by Chevron Phillips Chemical Company LP.
However, there is no warranty of any kind, either expressed or implied, applicable to its use, and the user assumes all risk and liability in connection therewith.

Kevin Ayres
Quality Control Supervisor

For CoA questions contact Customer Service Representative at +1-832-813-4782

TABLE 2672-A
REQUIRED PRE-SHIPPING SHEET TESTING OF GEOMEMBRANE – TEXTURED

Property	*Test Method*	*Frequency*
Thickness	ASTM D5994	Each Roll
Asperity Height mils	GM 12	Every 2nd roll *(1)*
Density	ASTM D1505/ ASTM D792	Every 200,000 lb.
Tensile Properties *(2)* • ***Break Strength*** • ***Break Elongation***	ASTM D6693, Type IV	Every 20,000 lb.
2% Modulus	ASTM D5323	Per each formulation
Tear Resistance	ASTM D1004	Every 45,000 lb.
Puncture Resistance	ASTM D4833	Every 45,000 lb.
Axi-Symmetric Break Resistance Strain – (min.)	ASTM D5617	Per each formulation
Carbon Black Content	ASTM D1603	Every 45,000 lb
Carbon Black Dispersion	ASTM D5596	Every 45,000 lb.
Oxidative Induction Time (OIT) *(3)*		Every 200,000 lb.
(a) Standard OIT (min. ave.)	ASTM D3895	
Or		
(b) High Pressure OIT (min. ave.)	ASTM D5885	
Oven Aging at 85°C *(4)*	ASTM D5721	Per each formulation
(a) Standard OIT(min. ave.) - % retained after 90 days	ASTM D3895	
Or		
(b) High Pressure OIT (min. ave.) - % retained after 90 days	ASTM D5885	

(1) Alternate the measurement side for double sided textured sheet.
(2) Machine direction (MD) and cross machine direction (XMD) average values should be on the basis of 5 test specimens each direction. Break elongation is calculated using a gage length of 2.0 inches.
(3) The manufacturer has the option to select either one of the OIT methods listed to evaluate the antioxidant content in the geomembrane.
(4) It is also recommended to evaluate samples at 30 and 60 days to compare with the 90 day response.

TABLE 2672-B
REQUIRED PHYSICAL PROPERTIES OF LLDPE GEOMEMBRANE - TEXTURED

Property	*Test Method*	*Required Value*
Geomembrane Size (Nominal)		40 mil
Thickness (min. ave.)	ASTM D-5994	38 mil
• lowest individual for 8 out of 10 values		36 mil
• lowest individual for any of the 10 values		34 mil
Asperity Height mils (min. ave.) *(1)*	GM 12	10 mil
Density (min.) max KB	ASTM D1505/ ASTM D792	0.939 g/cc
Tensile Properties (min. ave.)	ASTM D6693, Type IV	
- Break Stress		60 lb./in.
- Break Elongation		250%
2% Modulus – (max.)	ASTM D5323	2400 lb./in.
Tear Resistance (min. ave.)	ASTM D1004	22 lb.
Puncture Resistance (min. ave.)	ASTM D4833	44 lb.
Axi-Symmetric Break Resistance Strain	ASTM D5617	30%
Carbon Black Content (range)	ASTM D1603	2.0 – 3.0 %
Carbon Black Dispersion	ASTM D5596	9 in Categories 1 or 2 and 1 in Category 3
Oxidative Induction Time (OIT)		
(a) Standard OIT (min. ave.) or	ASTM D3895	100 minutes
(b) High Pressure OIT (min. ave.)	ASTM D5885	400 minutes
Oven Aging at 85°C	ASTM D5721	
(a) Standard OIT(min. ave.) - % retained after 90 days Or	ASTM D3895	35%
(b) High Pressure OIT (min. ave.) – % retained after 90 days	ASTM D5885	60%
Seam Strengths *(2)*		
1. Shear Strength: Hot Wedge Seam	ASTM D6392	60 lb/in (min.)
Extrusion Fillet Seam		60 lb/in (min.)
2. Peel Strength: Hot Wedge Seam	ASTM D6392	50 lb/in (min.)
Extrusion Fillet Seam		44 lb/in (min.)
3. Peel Separation: Hot Wedge Seam	ASTM D6392	25%
Extrusion Fillet Seam		25%
Non-Destructive Testing		
1. Extrusion Fillet Seam (Single Weld)	Continuous Vacuum Box	Maintain vacuum of at least 5-psi for at least 15 seconds
2. Hot Wedge Seam (Double Weld)	Air Testing	Maintain 30-psi for at least 5 minutes, with a drop in pressure not greater than 3-psi for the last 3 minutes

1. Of 10 readings; 8 out of 10 must be ≥ 7 mils, and lowest individual reading must be ≥ 5 mils.
2. Value listed for shear and peel strengths are for 4 out of 5 test specimens; the 5th specimen can be as low as 80% of the listed values.

S&ME

SUBMITTAL COVER SHEET

TO:	Fred L. Brown	**Date: 07/07/11**	**Job No.: 1356-07-017-05**
ADDRESS:	Earnhardt Grading, Inc.	Cover System Retrofit	
	7525 Old Plank Road	Pine Hall Road Landfill	
	Stanley, NC 28164	Duke Energy – Belews Creek Steam Station	
	Email: Fred@earnhardtgrading.com	Belews Creek, North Carolina	

Submittal Log ID No.: 012	Revision No.: 00	Contractor Transmittal No.: EGI-012
Specification Section: 02675	Date of Submittal Report: 07/07/11	
Submittal Subject: Geocomposite Drainage Layer		

Notations:
- [x] No Exception Taken
- [ ] Corrected as Noted
- [ ] Rejected
- [ ] Revise and Resubmit
- [ ] Submit Specified Items
- [ ] As Noted Herein

Remarks:

The MQC test results for the Skaps Transnet 330-2-8 geocomposite meet or exceed the minimum testing frequency specified in Table 02675-A and meet or exceed the minimum values specified in Table 02675-B.

Attachments:
EGI Transmittal No. 012
IFC Specifications, Tables 02675-A and 02675-B

Review of this submittal does not relieve the Contractor from their responsibility for deviations from the Contract Documents nor from their responsibility for errors or omissions in the submittal. Contractor is, and Engineer is not, responsible for matters relating to fabrication, shipping, handling, storage, assembly, installation, construction (including safety), and coordination for performing the Work.

7/7/11	7/7/11
Engineer of Record Kenneth Daly, P.E. **Date**	**Prepared by** Kyle Baucom, E.I. **Date**

Copies to:
- [x] David Grogg, Duke Energy
- [x] Kim Benson, Duke Energy
- [ ]
- [x] S&ME File No. 1356-07-017-05
- [x] Jamie Lineberger, Earnhardt Grading, Inc.
- [ ]

Earnhardt Grading, Inc
7525 Old Plank Rd
Stanley, North Carolina 28164

Phone: 704-601-4290
Fax: 704-601-4295

Project: Belews Creek Cap Repair

Submittal: BC Cap 012
Revision # 000

To: S&ME, Inc.
9751 Southern Pines Blvd
Charlotte, North Carolina 28273
Attn: Ken Daly

ENCLOSED

- [ ] Drawings
- [ ] Specifications
- [ ] Samples
- [x] Submittal Data
- [ ] Letter
- [ ] Photographs
- [ ] Brochure

SEPARATE COVER [ ]

Note:
____ Copies for job use in final approved form
____ Sample of material required to be submitted
X Submit

SUBMITTED FOR:

- [x] Approval
- [ ] Comment
- [ ] Your Use
- [ ] Color Selection
- [ ] _____
- [ ] _____
- [ ] _____

RETURNED:

- [ ] Approved
- [ ] Approved as Noted
- [ ] Corrected
- [ ] Resubmit for Approval Corrected
- [ ] Construction May Proceed Resubmit Corrected
- [ ] Disapproved

ITEMS IDENTIFIED AS FOLLOWS

Drawing	Qty	Date	Description
	1	7/7/2011	TN 330-2-8 Geocomposite Certification

Remarks: _____

Earnhardt Grading, Inc

By _____
Jamie Lineberger

Engineered Synthetic Products, Inc.

SKAPS

July 7, 2011
Plastic Fusion Fabricators
3455 Stanwood Blvd
Huntsville, AL 35811

Ref. : Pine Hall Road Landfill Closure, NC
Customer P.O. # P13508
Product : TN 330-2-8

We certify that the TN 330-2-8 drainage geocomposite, meets the project requirements as stated in the specifications. The properties listed in this section are:

Property	Test Method	Unit	Required Value	Qualifier
Geonet[3]				
Mass per Unit Area	ASTM D 5261	lbs/ft^2	0.162	Minimum
Thickness	ASTM D 5199	mil	300	Minimum
Carbon Black	ASTM D 4218	%	2.0 - 3.0	Range
Tensile Strength	ASTM D 5035	lbs/in	55	Minimum
Melt Flow	ASTM D 1238[2]	g/10 min	1.0	Maximum
Density	ASTM D 1505	g/cm^3	0.94	Minimum
Composite				
Ply Adhesion	ASTM D 7005	lb/in	1.0	MARV[5]
Transmissivity[1]	ASTM D 4716	m^2/sec	1.4×10^{-3}	MARV
Geotextile[3&4]				
Fabric Weight	ASTM D 5261	oz/yd^2	8.0	MARV
Grab Strength	ASTM D 4632	lbs	200	MARV
Grab Elongation	ASTM D 4632	%	50	MARV
Puncture Resistance	ASTM D 4833	lbs	110	MARV
Permeability	ASTM D 4491	cm/sec	0.30	MARV
AOS	ASTM D 4751	US Sieve	80	MARV
UV Resistance	ASTM D 4355	%/hrs	70/500	MARV

Notes:

1 Transmissivity measured using water at 21 ± 2 °C (70 ± 4 °F) with a gradient of 0.33 and a confining pressure of 1000 psf between sand & liner after 100 hours.
2 Condition 190/2.16
3 Geotextile and Geonet properties are prior to lamination.
4 Geotextile data is provided by the supplier.
5 MARV is statistically defined as mean minus two standard deviations and it is the value which is exceeded by 97.5% of all the test data.

Sincerely,
Nilay Patel
Nilay Patel
QA Manager

APPROVED 5 QA

571 Industrial Parkway, Commerce, GA 30529 Ph : 706-336-7000 Fax : 706-336-7007 Email : info@skaps.com

SKAPS

Product : **TN 330-2-8**
Project : **Pine Hall Road Landfill Closure, NC**

We, the Geocomposite Manufacturer, hereby certify the following for the material delivered to the above referenced project :

Roll	Geocomposite Roll Number	Geonet Roll Number	Geotextile Roll Number		Ply Adhesion (lb/in)		Geocomposite Transmissivity (m^2/sec)
			Side A	Side B	Minimum	Average	
1	43051010001	43051010001 - N	4305.002	4305.001	1.25 ✓	1.88 ✓	1.76×10^{-3} ✓
2	43051010002	43051010002 - N	4305.002	4305.001			
3	43051010003	43051010003 - N	4305.002	4305.001			
4	43051010004	43051010004 - N	4305.002	4305.001			
5	43051010005	43051010005 - N	4305.002	4305.001			
6	43051010006	43051010006 - N	4305.002	4305.001			

571 Industrial Parkway, Commerce, GA 30529 Ph : 706-336-7000 Fax : 706-336-7007 Email : info@skaps.com

KB

SKAPS

Product : **TN 330-2-8**
Project : **Pine Hall Road Landfill Closure, NC**

We, the Geonet Manufacturer, hereby certify the following for the material sent to the above referenced project :

Geonet Roll Number	Resin Lot Number	Geonet Density (gm/cc)	Mass Per Unit Area (lb/ft^2)	Thickness (mils)	Carbon Black (%)	Tensile Strength (MD) (lb/in)	Transmissivity (m^2/sec)
43051010001 - N	MBLX53250	0.9547	0.449	354 ✓	2.65 ✓	130 ✓	
43051010002 - N	MBLX53250	0.9547					
43051010003 - N	MBLX53250	0.9547					
43051010004 - N	MBLX53250	0.9547					
43051010005 - N	MBLX53250	0.9547					
43051010006 - N	MBLX53250	0.9547					

571 Industrial Parkway, Commerce, GA 30529 Ph : 706-336-7000 Fax : 706-336-7007 Email : info@skaps.com

KB

ASTM D 4716

Client:	Plastic Fusion Fabricators	**Job #**	4305
Project:	Pine Hall Road Landfill Closure, NC		
Product:	TN 330-2-8		

Test Configuration:

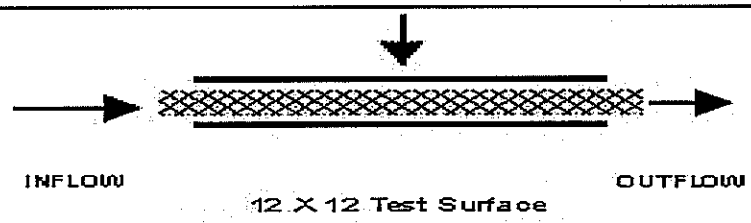

Test Information:

Boundary Conditions:	Sand Geocomposite Liner	**Normal Load:** 1000 **Gradient:** 0.33 **Seating Time:** ✓100 hours **Flow Direction:** MD

Test Results:

Roll No.	Pressure, psf	Gradient	Transmissivity, m^2/sec 100 hours
43051010001	1000 ✓	0.33 ✓	1.76×10^{-3} ✓

571 Industrial Parkway, Commerce, GA 30529 Ph : 706-336-7000 Fax : 706-336-7007 Email : info@skaps.com

KB

SKAPS

POLYETHYLENE RESIN CERTIFICATION

Customer Name : Plastic Fusion Fabricators
Project Name : Pine Hall Road Landfill Closure, NC
Geocomposite Manufacturer : SKAPS Industries
Geocomposite Production Plant : Commerce, GA
Geocomposite Brand Name : TN 330-2-8

We, the Geonet Manufacturer, hereby certify the following for the material delivered to the above referenced project:

Resin Supplier	Resin Production Plant	Resin Brand Name	Resin Lot Number	Property	Test Method	Units	Resin Supplier Value	Tested Value*
Trademark Plastics Corporation	Chevron, TX	HDPE	MBLX53250	Density	ASTM D1505	gm / cc	0.950	0.950 ✓
				Melt flow Index	ASTM D1238[a]	gm / 10 min	0.10	0.10

(a) Condition 190/2.16
* Data from SKAPS Quality Control

571 Industrial Parkway, Commerce, GA 30529 Ph : 706-336-7000 Fax : 706-336-7007 Email : info@skaps.com

SKAPS

Product : **TN 330-2-8**
Project : **Pine Hall Road Landfill Closure, NC**

We, the Geocomposite Manufacturer, hereby certify the following for the material delivered to the above referenced project :

GEOCOMP ROLL#	FABRIC ROLL#	WEIGHT oz/sq yd	MD TENSILE lbs.	MD ELONG %	XMD TENSILE lbs.	XMD ELONG %	PUNCTURE lbs.	AOS us sieve	PERM-ABL cm/sec
43051010001	4305.002	8.48 ✓	226 ✓	71	239 ✓	85	134 ✓	80 ✓	0.44 ✓
	4305.001	8.48 ✓	226 ✓	71	239 ✓	85	134 ✓	80 ✓	0.44 ✓

571 Industrial Parkway, Commerce, GA 30529 Ph : 706-336-7000 Fax : 706-336-7007 Email : info@skaps.com

KB

TABLE 02675-A
MANUFACTURING QUALITY CONTROL TEST FREQUENCIES

Property	Test Method	Frequency
Geonet		
Thickness	ASTM D5199	50,000 ft^2
Density (geonet)	ASTM D1505	50,000 ft^2
Carbon Black Content	ASTM D1603	50,000 ft^2
Resin		
Polymer Density	ASTM D1505	Once per lot
Melt Flow Index	ASTM D1238	Once per lot
Geotextile		
Mass per Unit Area	ASTM D5261	100,000 ft^2
Grab Tensile	ASTM D4632	100,000 ft^2
Puncture	ASTM D4833	100,000 ft^2
AOS, US Sieve	ASTM D4751	540,000 ft^2
Water Flow Rate	ASTM D4491	540,000 ft^2
UV Resistance	ASTM D4355	once per resin formulation
Geocomposite		
Compression Strength	ASTM D1621	100,000 ft^2
Ply Adhesion	ASTM D7005	50,000 ft^2
Transmissivity	ASTM D4716	540,000 ft^2

TABLE 02675-B
GEOCOMPOSITE REQUIRED PHYSICAL PROPERTIES

Property	Test Method	Qualifier[1]	Minimum Average Value
Geonet			
Polymer Composition, %			95% polyethylene by weight
Thickness, mil	ASTM D5199	MAV	200
Density, g/cm^3	ASTM D1505	MAV	0.94
Tensile Strength, lb/in	ASTM D5035	MAV	55
Carbon Black Content, %	ASTM D1603	range	2.0 – 3.0
Resin			
Polymer Density, g/cm^3	ASTM D1505	MAV	> 0.94
Melt Flow Index, g/10 min	ASTM D1238	MAX	≤ 1.0
Geotextile			
Mass per Unit Area, oz/yd^2	ASTM D5261	MAV	8
Grab Tensile, lb	ASTM D4632	MAV	200
Puncture Strength, lb	ASTM D4833	MAV	110
AOS, US Sieve (mm)	ASTM D4751	MAV	80 (0.18 mm)
Permeability, cm/s	ASTM D4491	MAV	0.3
Geocomposite			
Transmissivity[2, 3], m^3/m/sec	ASTM D4716	MAV	1.4×10^{-3}
Ply Adhesion, lb/in	ASTM D7005	MAV	1.0

Notes:
1. MAV = Minimum Average Value, MAX = Maximum Value
2. Liner System: Gradient of 0.03, normal load of 7,200 psf, between soil and geomembrane at seat time of 100 hours.
3. Cover System: Gradient 0.33, normal load of 1,000 psf, between soil and geomembrane at seat time of 100 hours.

2.2 ACCESSORIES

A. Geonet Ties: Plastic fasteners recommended by Manufacturer for tying geonet panels together. Metallic ties shall not be used for joining the geonet strips.

PART 3 EXECUTION

3.1 GENERAL

A. The Geosynthetics Installer shall furnish all labor, materials, supervision and equipment to install the geocomposite for the project including, but not limited to, geocomposite layout, seaming, patching, and all necessary and incidental items required to complete the work, in accordance with the Drawings and these Specifications.

S&ME

SUBMITTAL COVER SHEET

TO:	Fred L. Brown	**Date: 07/08/11**	**Job No.: 1356-07-017-05**
ADDRESS:	Earnhardt Grading, Inc.	Cover System Retrofit	
	7525 Old Plank Road	Pine Hall Road Landfill	
	Stanley, NC 28164	Duke Energy – Belews Creek Steam Station	
	Email: Fred@earnhardtgrading.com	Belews Creek, North Carolina	

Submittal Log ID No.: 013	Revision No.: 00	Contractor Transmittal No.: EGI-013
Specification Section: 02672	Date of Submittal Report: 07/08/11	
Submittal Subject: Linear Low Density Polyethylene (LLDPE) Geomembrane		

Notations:
- ☒ No Exception Taken
- ☐ Corrected as Noted
- ☐ Rejected
- ☐ Revise and Resubmit
- ☐ Submit Specified Items
- ☐ As Noted Herein

Remarks:

The resume of the proposed Superintendent of the Geosynthetic Installer is consistent with submittal requirements in Specification Section 02672, Part 1.4.E.

Attachments:
EGI Transmittal No. 013

Review of this submittal does not relieve the Contractor from their responsibility for deviations from the Contract Documents nor from their responsibility for errors or omissions in the submittal. Contractor is, and Engineer is not, responsible for matters relating to fabrication, shipping, handling, storage, assembly, installation, construction (including safety), and coordination for performing the Work.

7/8/11		7/8/11	
Engineer of Record	**Date**	**Prepared by**	**Date**
Kenneth Daly, P.E.		Kyle Baucom, E.I.	

Copies to:
- ☒ David Grogg, Duke Energy
- ☒ Kim Benson, Duke Energy
- ☐
- ☒ S&ME File No. 1356-07-017-05
- ☒ Jamie Lineberger, Earnhardt Grading, Inc.
- ☐

Earnhardt Grading, Inc

7525 Old Plank Rd
Stanley, North Carolina 28164

Phone: 704-601-4290
Fax: 704-601-4295

Project: Belews Creek Cap Repair

Submittal: BC Cap 013
Revision # 000

To: S&ME, Inc.
9751 Southern Pines Blvd
Charlotte, North Carolina 28273
Attn: Ken Daly

ENCLOSED

- [ ] Drawings
- [ ] Specifications
- [ ] Samples
- [x] Submittal Data
- [ ] Letter
- [ ] Photographs
- [ ] Brochure

SEPARATE [ ]

COVER

Note:
- ___ Copies for job use in final approved form
- ___ Sample of material required to be submitted
- X Submit

SUBMITTED FOR:

- [x] Approval
- [ ] Comment
- [ ] Your Use
- [ ] Color Selection
- [ ] _____
- [ ] _____
- [ ] _____

RETURNED:

- [ ] Approved
- [ ] Approved as Noted
- [ ] Corrected
- [ ] Resubmit for Approval Corrected
- [ ] Construction May Proceed Resubmit Corrected
- [ ] Disapproved

ITEMS IDENTIFIED AS FOLLOWS

Drawing	Qty	Date	Description
	1	7/8/2011	Resume of geosynthetic installer's superintendent

Remarks: _____

Earnhardt Grading, Inc

By _____
Jamie Lineberger

Plastic Fusion Fabricators, Inc.
3455 Stanwood Boulevard Huntsville, Alabama 35811
1-800-356-1480 (256)852-0378 (256)852-0442 Fax

RESUME

Name: AL CORBITT

Position: FIELD SUPERVISOR/MASTER SEAMER

JOB NAME/LOCATION	SQ. FT. INST.
BFI - CMS CELL 1 B HARRISBURG, NC	1,348,181
WESTINGHOUSE SAVANNAH RIVER AIKEN, SC	169,140
MISSISSIPPI POWER CO. PASCAGOULA, MS	19,800
BFI-TIMBERLANDS PHASE II BREWTON, AL	660,516
BFI - SAMPSON COUNTY PHASE II ROSEBORO, NC	706,842
CRESCENT HOISERY NIOTA, TN	8,052
SAVAGE ZINC/CLINCH VALLEY MINE THORNHILL, TN 37881	26,773
WEST CARROLL PARRISH OAK GROVE, LA	191,000
DELTA HUDSON-BIG HILL WINNIE, TX	38,000
GEORGIA PACIFIC CORPORATION RUSSELVILLE, SC	52,000
WEYERHAEUSER COMPANY	5,200
ENVIRONMENTAL TECH. RICHMOND, VA	60,434
ENVIRONMENTAL TECH. RICHMOND, VA	160,875
NWASI REDSTONE ARSENAL, AL 3	49,027
RIVER BEND STATION WWT PLANT ST. FRANCISVILLE, LA	113,850
BI-COUNTY SOLID WASTE LANDFILL CLARKSVILLE, TN	266,381

JOB NAME/LOCATION	SQ. FT. INST.
MACMILLAN BLOEDEL HENDERSON, KY	19,440
CITY OF BOLIVAR BOLIVAR, VA	245,700
VIRO GROUP MORGAN CITY	122,850
KIAWAH ISLAND WWTP KIAWAH ISLAND, SC	195,115
BFI TIMBERLANDS - PHASE III BREWTON, AL	374,362
CARVINS COVE WTP ROANOKE, VA	47,049
RSA-49 LANDFILL CLOSURE REDSTONE ARSENAL, AL	513,045
LEDBETTER WWT LAGOONS PADUCAH, KY	250,000
GNB ENVIRONMENTAL SERVICES FRISCO, TX	101,252
SOUTHWIRE COMPANY CARROLLTON, GA	8,583
W. L. CONSTRUCTION & PAVING CHILHOWIE, VA	457,000
INTERNATIONAL PAPER PINEVILLE, LA	212,000
APAC - TRICO STEEL DECATUR, AL	1,004,882
FOUR SEASONS TUSCALOOSA, AL	43,920
CALCASIEU PARISH LANDFILL LAKE CHARLES, LA	229,030
SOUTHEAST REGIONAL WWTF MINDEN, LA	155,112
MALLARD CREEK POLYMERS CHARLOTTE, NC	35,000
WARREN COUNTY LANDFILL WARREN COUNTY, NC	56,976
HAMILTON COUNTY CHATTANOOGA, TN	94,600

JOB NAME/LOCATION	SQ. FT. INST.
SE SCHOOL SEWAGE SYSTEMS REMLAP, AL	28,483
AMERICAN PROTEINS, INC. HANCEVILLE, AL	224,200
AQUATIC BIOENHANCEMENT FALLS CITY, TX	108,460
AMERICAN PROTEINS, INC. CUMMING, GA	51,364
ROBESON COUNTY LANDFILL ST. PAULS, NC	854,000
ARNOLD AIR FORCE BASE TULLAHOMA, TN	64,000
AMOCO CORPORATION TEXAS CITY, TX	11,950
WEST CARROLL PARISH LANDFILL OAK GROVE, LA	30,000
OXYCHEM PIPELINE MARKHAM, TX	242,270
TEXARKANA MIL DOMINO, TX	33,340
GEORGIA FEED PRODUCTS CUTHBERT, GA	139,454
GEORGIA FEED PRODUCTS CUTHBERT, GA	105,000
BFI-SAMPSON CO PHASE IIIB ROSEBORO, NC	261,508
ROSE CONSTRUCTION DYER CO, TN	5,600
CAJUN CONTRACTORS ALBANY, KY	763,800
LEBANON LANDFILL COLLINSVILLE, AL	54,765
BFI-CMS HARRISBURG, NC	6,498
SIMMONS FOODS, INC. SOUTHWEST CITY, MO	130,000
SAVAGE ZINC, INC. THORNHILL, TN	18,500

JOB NAME/LOCATION	SQ. FT. INST.
LEBANON LANDFILL COLLINSVILLE, AL	145,500
SAVAGE ZINC CLARKSVILLE, TN	46,640
TRUS JOIST MACMILLAN CASTLEBERRY, AL	37,736
PHILIP INDUSTRIAL SERVICES PHALBA, TX	80,325
SAMPSON CO. LANDFILL CELL 1 & 2 ROSEBORO, NC	746,258
BFI BUFORD, GA	446,490
GEK, INC. COLLINSVILLE, AL	153,340
WEST CARROLL PARISH LANDFILL OAK GROVE, LA	225,000
VULCAN MATERIALS NORCROSS, GA	17,000
MINE ROAD REGIONAL LANDFILL ATHENS, TN	398,566
GEORGIA FEED PRODUCTS CUTHBERT, GA	123,200
CITY OF ORANGE BEACH ORANGE BEACH, AL	11,496
EAST CAROLINA LANDFILL AULANDER, NC	184,585
INTERNATIONAL PAPER PRATTVILLE, AL	292,600
CULLMAN ENVIRONMENTAL CULLMAN, AL	269,028
AMERISTEEL JACKSON, TN	138,000
STEELE WWTP STEELE, AL	307,996
SAMPSON CO. LANDFILL ROSEBORO, NC	870,000
GLENRIDGE HIGHLANDS ATLANTA, GA	36,608

JOB NAME/LOCATION	SQ. FT. INST.
CLIFT'S COVE MADISON, AL	154,000
KERR MCGEE THEODORE, AL	6,515
REPUBLIC SERVICES, INC. ROUGEMONT, NC	307,634
CANDLER CO. LANDFILL CANDLER CO., GA	155,367
TAYLOR ROAD LANDFILL CHESTERFIELD, VA	214,000
RIVERSIDE FARM CLAXTON, GA	79,325
GASTON CO. LANDFILL DALLAS, NC CELL 2 CONSTRUCTION	493,300
SOUTHERN REGIONAL WWTP WAVELAND, MS	70,500
AMERISTEEL, INC. JACKSON, TN	149,765
UWHARRIE MSW LANDFILL CELL 8 MT. GILEAD, NC	245,000
UWHARRIE MSW LANDFILL CLOSURE MT. GILEAD, NC	594,502
COPPERMINE LAS EXPANSION HIRAM, GA	221,500
INLAND PAPERBOARD ROME, GA	32,338
MASLAND CARPETS ATMORE, AL	35,040
LENOIR CO. LANDFILL PHASE I LA GRANGE, NC	510,000
MADISONVILLE WWTP MADISONVILLE, KY	20,000
BRISTOL QUARRY - PH 2B EXTENSION BRISTOL, VA	38,500
EAGLE POINT CELLS 5 & 6 BALL GROUND, GA	893,943
UPPER CUMBERLAND MSWLF AREA 10 RED BOILING, TN	127,952

JOB NAME/LOCATION	SQ. FT. INST.
TUSCARORA LANDFILL NEW BERN, NC	1,524,000
SAMPSON COUNTY LANDFILL CELL 6 ROSEBORO, NC	925,900
BRISTOL QUARRY LANDFILL SIDEWALL EXTENSION BRISTOL, VA	68,180
FARBEST FOODS, INC. HUNTINGBURG, IN	118,200
TYSON FOODS, INC. TEMPERANCEVILLE, VA	52,783
AMERICAN PROTEIN CUTHBERT, GA	203,310
WALKER MOUNTAIN ROAD LANDFILL PHASE 7 ROME, GA	500,000
BRISTOL QUARRY LANDFILL SIDEWALL EXTENSION BRISTOL, VA	81,098
WOLF CREEK LANDFILL CELL 5 DRY BRANCH, GA	244,891
DUKE ENERGY - RESIDUE LANDFILL BELEWS CREEK, NC	1,094,600
NUCOR STEEL TRINITY, AL	55,650
TOTAL SQ. FT. INST.	24,923,340

S&ME

SUBMITTAL COVER SHEET

TO:	Fred L. Brown	**Date: 07/25/11**	**Job No.: 1356-07-017-05**
ADDRESS:	Earnhardt Grading, Inc.	Cover System Retrofit	
	7525 Old Plank Road	Pine Hall Road Landfill	
	Stanley, NC 28164	Duke Energy – Belews Creek Steam Station	
	Email: Fred@earnhardtgrading.com	Belews Creek, North Carolina	

Submittal Log ID No.: 014	Revision No.: 00	Contractor Transmittal No.: N/A
Specification Section: 02924	Date of Submittal Report: 07/20/11	
Submittal Subject: Seeding and Soil Supplements		

Notations:
- ☒ No Exception Taken
- ☐ Corrected as Noted
- ☐ Rejected
- ☐ Revise and Resubmit
- ☐ Submit Specified Items
- ☐ As Noted Herein

Remarks:

The attached soil test results and fertilizer and soil amendment recommendations are consistent with submittal requirements in Specification Section 02924, Part 1.5.B.

Attachments:
Soil Test Results and Amendment Recommendations

Review of this submittal does not relieve the Contractor from their responsibility for deviations from the Contract Documents nor from their responsibility for errors or omissions in the submittal. Contractor is, and Engineer is not, responsible for matters relating to fabrication, shipping, handling, storage, assembly, installation, construction (including safety), and coordination for performing the Work.

Engineer of Record	**Date**	**Prepared by**	**Date**
Kenneth Daly, P.E.	7/25/11	Kyle Baucom, E.I.	7/25/11

Copies to:
- ☒ David Grogg, Duke Energy
- ☒ Kim Benson, Duke Energy
- ☐
- ☒ S&ME File No. 1356-07-017-05
- ☒ Jamie Lineberger, Earnhardt Grading, Inc.
- ☐

A&L Eastern Laboratories, Inc.

7621 Whitepine Road Richmond, Virginia 23237 (804) 743-9401 Fax (804) 271-6446

www.aleastern.com

6/8/2011 **SOIL ANALYSIS**

Client : SIDES CONTRACTING CO INC POB 1969 Welcome NC 27374-1969	Grower : PO:	Report No: 11-157-0528 Cust No: 46364 Date Printed: 06/08/2011 Date Received : 06/06/2011 Date Analysis : 06/07/2011 Page : 1 of 2

Lab Number : 19038 **Field Id :** **Sample Id :**

Test	Results	SOIL TEST RATINGS (Very Low / Low / Medium / Optimum / Very High)
Soil pH	7.5	
Buffer pH		
Phosphorus (P)	559 ppm	
Potassium (K)	954 ppm	
Calcium (Ca)	769 ppm	
Magnesium (Mg)	413 ppm	
Sulfur (S)	79 ppm	
Boron (B)		
Copper (Cu)		
Iron (Fe)		
Manganese (Mn)		
Zinc (Zn)		
Sodium (Na)		
Soluble Salts		
Organic Matter	0.9 % ENR 54	
Nitrate Nitrogen		

Calculated Cation Exchange Capacity

9.7 meq/100g

Calculated Cation Saturation

%K	25.2
%Ca	39.6
%Mg	35.5
%H	0.0
Hmeq	0.0

K : Mg Ratio

0.71

SOIL FERTILITY GUIDELINES

Crop : Bermudagrass Lawn **Rec Units:** LB/1000 SF

(lbs)	LIME	(tons)	N	P_2O_5	K_2O	Mg	S	B	Cu	Mn	Zn	Fe
0			3.5	0	0	0	0					

Crop : **Rec Units:**

Comment :

Analysis prepared by: A&L Eastern Laboratories, Inc.

www.aleastern.com

A&L Eastern Laboratories, Inc.

7621 Whitepine Road Richmond, Virginia 23237 (804) 743-9401 Fax (804) 271-8446

6/8/2011 **SOIL ANALYSIS**

Client : SIDES CONTRACTING CO INC POB 1969 Welcome NC 27374-1969	Grower : PO:	Report No: 11-157-0528 Cust No: 46364 Date Printed: 06/08/2011 Date Received : 06/06/2011 Date Analysis : 06/07/2011 Page : 2 of 2

Lab Number : 19038 **Field Id :** **Sample Id :**

SUGGESTED FERTILIZATION PROGRAM

First Application		Second Application		Third Application		Fourth Application	
#/1000 Sq. Ft.	Fertilizer	#/1000 Sq. Ft.	Fertilizer	#/1000 Sq. Ft.	Fertilizer	#/1000 Sq. Ft.	Fertilizer
6	21-0-0	6	21-0-0	6	21-0-0		

Comments:

Bermudagrass Lawn

· Cation Exchange Capacity may be over-estimated due to high potassium level.

· The above fertilizer application recommendation is a general guideline, if the specified grades can not be found, replace with fertilizer having similar N:P:K ratio. The best time to apply fertilizer for warm season grass (bermuda, St. Augustine, zoysia, bahia, centipede) is in the late spring and summer when grass is growing. For Mid-Atlantic region the time is from May to Mid September. Apply with the interval of 4-6 weeks. These grades of fertilizer are the best fit for your requirements for Nitrogen and Phosphorus. It may cause the amount of Potassium being slightly lower than the amount required. This problem should not affect the growth of your lawn and can be easily adjusted from resubmitting soil sample same time next year.

· Apply 2.5 pounds of elemental sulfur per 1000 square feet to reduce pH. Repeat one application for every 0.1 pH unit above 7.3. For example soil with pH 7.5 will need 2 applications. Time between applications should be minimum of 3 months. Warm temperature and moist soil are needed for sulfur to work. If application is in winter or in drought condition, more time is required. Test soil after 3-4 applications to determine further application is needed.

· Use ammonium sulfate as all or portion of the N requirement to reduce pH.

· For more in depth explanation, go to our website www.al-labs-eastern.com and select the "Lawn and Garden" tab at the top of home page. At the bottom of the "Lawn and Garden" page, you find information explaining a soil test report and fertilizer recommendations. http://al-labs-eastern.com/forms/LawnGardenSoilTestExplained.pdf

As-Built Drawing

AS-BUILT/TOPOGRAPHIC EXHIBIT
PINE HALL ROAD ASH LANDFILL CLOSURE COVER SYSTEM RETROFIT PROJECT
A PORTION OF PARCEL 698200642715

SAURATOWN TOWNSHIP, STOKES COUNTY, N.C.

PREPARED FOR:	OWNER:
EARNHARDT GRADING COMPANY 7525 OLD PLANK ROAD STANLEY, NC 28164 PHONE: 704.601.4290 FAX: 704.601.4295	DUKE ENERGY CORPORATION PO BOX 1007 CHARLOTTE, NC 28201

WSP • SELLS
Transportation & Infrastructure
128 Overhill Drive Suite 105 • Mooresville, NC 28117 • 704.662.0100
www.wspsells.com
LICENSE NO.: F-0891

Tax Parcel Number Portion of 698200642715	Drawn By GHL	Date of Field Survey JULY 20, 2011	Field Book 130	Job Number 116020
Sheet Number 1 OF 2	Checked By JNF	Date AUGUST 18, 2011	Scale 1" = 50'	File Name 116020-EXHIBIT

GRAPHIC SCALE

50 0 25 50 100 200

(IN FEET)
1 inch = 50 ft.

NC GRID NAD 83/86

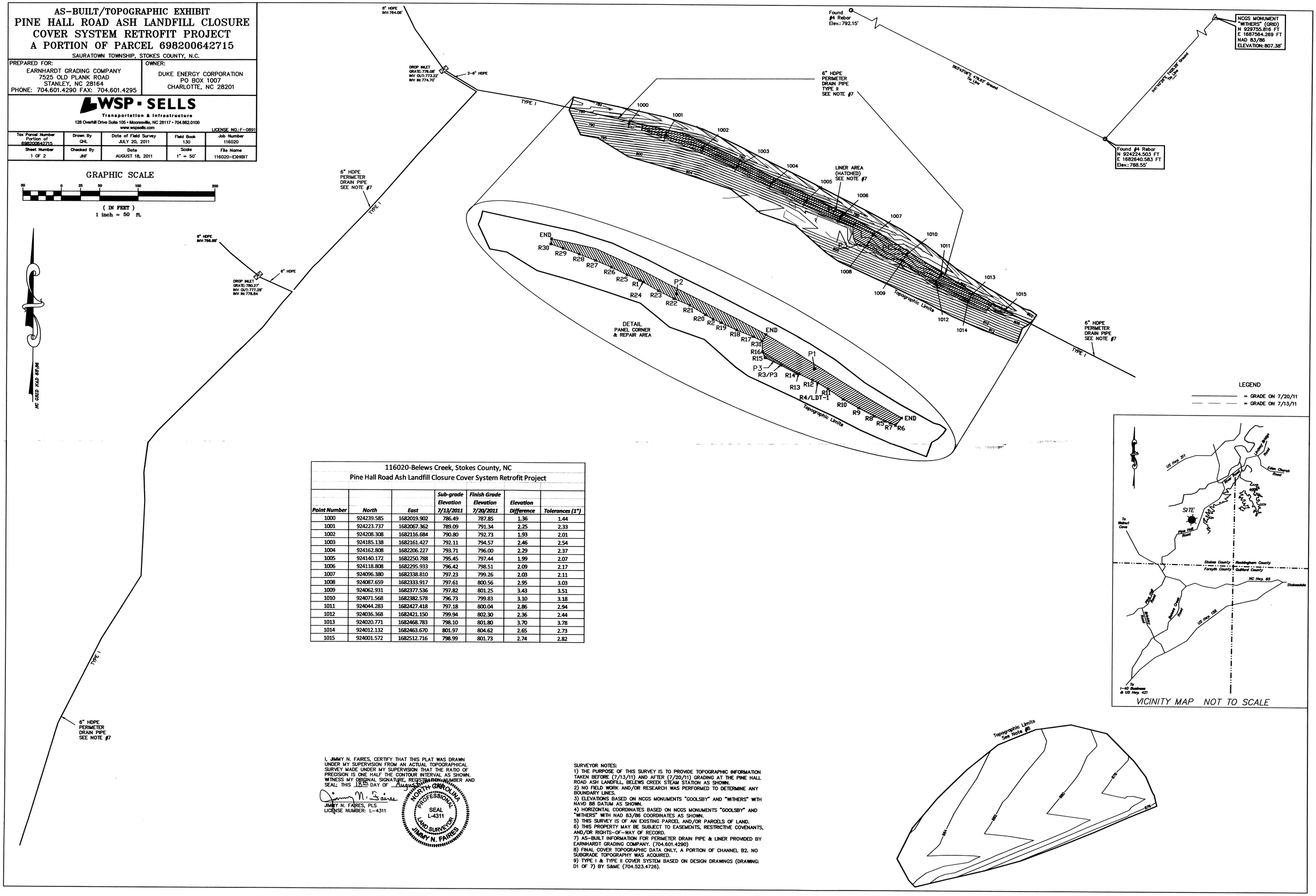

116020-Belews Creek, Stokes County, NC Pine Hall Road Ash Landfill Closure Cover System Retrofit Project						
Point Number	North	East	Sub-grade Elevation 7/13/2011	Finish Grade Elevation 7/20/2011	Elevation Difference	Tolerances (1")
1000	924239.585	1682019.902	786.49	787.85	1.36	1.44
1001	924223.737	1682067.362	789.09	791.34	2.25	2.33
1002	924208.308	1682116.684	790.80	792.73	1.93	2.01
1003	924185.138	1682161.427	792.11	794.57	2.46	2.54
1004	924162.808	1682206.227	793.71	796.00	2.29	2.37
1005	924140.172	1682250.788	795.45	797.44	1.99	2.07
1006	924118.808	1682295.933	796.42	798.51	2.09	2.17
1007	924096.380	1682338.810	797.23	799.26	2.03	2.11
1008	924087.659	1682333.917	797.61	800.56	2.95	3.03
1009	924062.931	1682377.536	797.82	801.25	3.43	3.51
1010	924071.568	1682382.578	796.73	799.83	3.10	3.18
1011	924044.283	1682427.418	797.18	800.04	2.86	2.94
1012	924036.368	1682421.150	799.94	802.30	2.36	2.44
1013	924020.771	1682468.783	798.10	801.80	3.70	3.78
1014	924012.132	1682463.670	801.97	804.62	2.65	2.73
1015	924001.572	1682512.716	798.99	801.73	2.74	2.82

I, JIMMY N. FAIRES, CERTIFY THAT THIS PLAT WAS DRAWN UNDER MY SUPERVISION FROM AN ACTUAL TOPOGRAPHICAL SURVEY MADE UNDER MY SUPERVISION THAT THE RATIO OF PRECISION IS ONE HALF THE CONTOUR INTERVAL AS SHOWN. WITNESS MY ORIGINAL SIGNATURE, REGISTRATION NUMBER AND SEAL; THIS 18th DAY OF August

JIMMY N. FAIRES, PLS
LICENSE NUMBER: L-4311

NORTH CAROLINA PROFESSIONAL SEAL L-4311 LAND SURVEYOR JIMMY N. FAIRES

SURVEYOR NOTES:
1) THE PURPOSE OF THIS SURVEY IS TO PROVIDE TOPOGRAPHIC INFORMATION TAKEN BEFORE (7/13/11) AND AFTER (7/20/11) GRADING AT THE PINE HALL ROAD ASH LANDFILL, BELEWS CREEK STEAM STATION AS SHOWN.
2) NO FIELD WORK AND/OR RESEARCH WAS PERFORMED TO DETERMINE ANY BOUNDARY LINES.
3) ELEVATIONS BASED ON NCGS MONUMENTS "GOOLSBY" AND "WITHERS" WITH NAVD 88 DATUM AS SHOWN.
4) HORIZONTAL COORDINATES BASED ON NCGS MONUMENTS "GOOLSBY" AND "WITHERS" WITH NAD 83/86 COORDINATES AS SHOWN.
5) THIS SURVEY IS OF AN EXISTING PARCEL AND/OR PARCELS OF LAND.
6) THIS PROPERTY MAY BE SUBJECT TO EASEMENTS, RESTRICTIVE COVENANTS, AND/OR RIGHTS-OF-WAY OF RECORD.
7) AS-BUILT INFORMATION FOR PERIMETER DRAIN PIPE & LINER PROVIDED BY EARNHARDT GRADING COMPANY. (704.601.4290)
8) FINAL COVER TOPOGRAPHIC DATA ONLY, A PORTION OF CHANNEL B2. NO SUBGRADE TOPOGRAPHY WAS ACQUIRED.
9) TYPE I & TYPE II COVER SYSTEM BASED ON DESIGN DRAWINGS (DRAWING: D1 OF 7) BY S&ME (704.523.4726).

APPENDIX II – PROJECT DOCUMENTATION

Meeting Summaries
Field Reports
Construction Photographs

Meeting Summaries

MEMORANDUM

TO: Attendees

CC: None

FROM: S&ME, Inc.

DATE: June 15, 2011

SUBJECT: **June 7, 2011 Meeting – Discussion Summary**
Pre-Construction Meeting
Pine Hall Road Closure Retrofit
Duke Energy – Belews Creek Steam Station
S&ME Project No. 1356-07-017 Ph. 05

MEETING ATTENDEES:

Duke Energy (Duke): Kim Benson; Vanessa Cano; David Grogg

S&ME, Inc. (S&ME): Jimmy Addis; Kyle Baucom; Ken Daly

Earnhardt Grading, Inc. (EGI): Fred Brown; Jamie Lineberger; Ron Love; Bob Lynn

This discussion summary is intended to provide a general summary of the meeting. This discussion summary is based on the notes and memory of the authors and is not intended to be a rigorous and complete meeting record. The meeting began at approximately 9:00 A.M.

DISCUSSION ITEM SUMMARY:

1. **Level I Safety Assessment:** Kim Benson conducted a Level 1 safety assessment.

2. **Introductions:** Meeting attendees introduced themselves and their role with the project. Kim Benson – Duke Project Manager; Vanessa Cano – Duke Co-op Support; David Grogg – Duke Project Manager and primary Duke contact for correspondence; Jimmy Addis – S&ME construction oversight; Kyle Baucom – S&ME construction oversight and engineering support; Ken Daly – S&ME Project Engineer; Fred Brown – EGI Project Manager; Jamie Lineberger – EGI construction support; Ron Love – EGI Site Safety Contact; and Bob Lynn – EGI Superintendent.

3. Health and Safety Requirements:

3.1 Safe Work Practices: David Grogg explained that safe work practices are the essential guidelines to be followed by contractor and oversight during project construction. He also explained that near misses help with reevaluation of the safe work practices.

3.2 Procedures/Incident Report: Kim Benson explained that incident reporting is mandatory as minor as the incident may be. She explained that the incident reporting process consists of first calling the control room (for incidents requiring first responders or emergency response) and getting the person safe followed by calling the site contact. She explained that the E-track form must be submitted within 24 hours to her, David Grogg, and the site safety contact. She reiterated that the E-track form must be submitted within 24 hours even if some incident information was not known at the time. She also explained that a follow up e-mail should be sent to the site contact at end of the day providing an update of the incident status.

3.3 Safety Meetings: David Grogg explained that daily tailgate safety meetings at the beginning of the work day are mandatory. He explained that tailgate safety meetings should also occur any time that field activities change. He explained that safety meetings will also be incorporated into the weekly construction progress meetings. He also explained that during safety meetings, the job hazard analyses (JHAs) should be reevaluated following performance of a task to confirm that the JHA is satisfactory. David Grogg requested that EGIs safety representative, Ron Love, notify Duke (David Grogg) upon his arrival to the site and before he departs.

3.4 First Aid: Ron Love explained that first aid kits will be available on-site, and that he will evaluate supplies during his site visits.

3.5 Site Assembly/Evacuation: Fred Brown explained that EGI intends to use the parking area just inside of the main gate as the site assembly point. Kim Benson explained that due to nature of site, EGI and S&ME personnel should act as guides for first responders in the event of an emergency.

3.6 Spill Reporting: Kim Benson explained that similar to incident reporting, spill reporting is also mandatory as minor as the spill may be. She explained that spill reporting should follow the same protocol as incident reporting.

3.7 Job Hazard Analysis Preparation: Fred Brown explained that EGI prepared 6 JHAs for project construction. David Grogg explained that Duke had reviewed the JHAs and had several comments. Fred Brown explained that he agreed with the comments with the exception of having a spotter for each piece of equipment and having the equipment operators read the operations and maintenance (O&M) manual for the equipment. David Grogg agreed with not having a spotter for each piece of equipment, but disagreed with not having equipment operators read the O&M manual for the equipment. Duke and EGI agreed to finalize JHA review at a later time. Fred Brown explained that EGI will provide the JHAs to S&ME once they are finalized. Ken Daly explained that S&ME has a standard operations procedure manual for monitoring and testing as well as a struck-by manual, and S&ME will provide these manuals to EGI.

4. **Permits**:
   4.1 Erosion and Sediment Control (E&SC) Permit: Ken Daly explained that the E&SC permit was approved with modifications, which consist of providing silt fence outlets at low points in the silt fence and maintaining stockpile slopes no steeper than 2H:1V.
   4.2 Hot Work Permits: The group discussed when hot work permits would be necessary. S&ME and EGI explained geomembrane seaming procedures and indicated that they did not believe that a hot work permit would be needed for geomembrane seaming. Ken Daly explained that typically geotextiles are heat bonded with a lyster heat gun or blow torch. Additionally, following the meeting Ken Daly explained to David Grogg that S&ME personnel typically use a propane stove to perform moisture content tests on soils. David Grogg explained that a hot work permit is needed if there is an open flame.
5. **Distribution and Review of Contract Documents**: Ken Daly explained that S&ME prepared "Issued for Construction" construction documents (i.e. specifications and drawings). Parties reviewed project drawings. During review of project drawings, parties generally agreed to the following items:
   5.1 Silt fence outlet locations will be field fit;
   5.2 The two perimeter drain outlet locations will be field fit;
   5.3 Proposed seepage diaphragm 4-inch pipe connections to the down drain pipe are feasible to construct;
   5.4 Down drain pipes will be replaced with solid walled HDPE pipe;
   5.5 Replaced down drain pipes will be SDR 32.5 (instead of SDR 17) and no construction traffic over the replaced down drain pipes will be allowed; and
   5.6 Underlying geocomposite drainage layer throughout section of seepage diaphragm will be removed.

   Ken Daly explained that S&ME will revise Drawing D4. Kim Benson requested electronic (CAD and Adobe) and half size drawing sets for her and David Grogg. Ken Daly said that S&ME will provide the requested drawing sets.

   During this time, parties also discussed quantities and payment terms. Ken Daly explained that Type 1 and 2 perimeter would be performed on a unit price basis, and the extents of the perimeter type will be determined in the field. Kim Benson clarified that S&ME should determine the perimeter type since they are the engineer.
6. **Schedule**: Fred Brown explained that EGI will submit a revised schedule based on the new start date. He explained that EGI plans to start next week some time with E&SC measure installation. Following E&SC measure installation, he explained that EGI plans to begin construction on the north west perimeter Type 1. Ken Daly explained that at Drop Inlet 7, there is water coming into the pipe at a pipe joint (based on camera inspection). He requested that EGI excavate the existing pipe connection as schedule permits to allow Duke and S&ME to observe this area. The group requested that EGI perform down drain replacement early in the schedule so that the performance can be observed during the remainder of construction.
7. **Submittals and Shop Drawings**: Ken Daly explained that S&ME received submittals, and they will work to review the submittals as soon as possible.

8. **CM Requirements, Procedures, Protocols**: Ken Daly proposed Wednesdays for weekly construction progress meetings. Parties agreed to meeting on Wednesdays at 1:00 P.M.
9. **CQA Regulations, Procedures, Protocols**: Ken Daly explained that in-place density testing is required on replaced subgrade and roadwork construction. He explained that S&ME will use historical standard Proctor data and perform new standard Proctors tests on subgrade material. He explained that no conformance testing is required on geosynthetics, and that they will be approved based on passing MQC test results.
10. **Record Drawings**: Ken Daly reviewed as-built survey requirements, which consist of:
    10.1 Restored subgrade survey;
    10.2 Geomembrane as-built survey;
    10.3 Perimeter drain and stormwater piping and structures as-built survey; and
    10.4 Final cover survey.

    David Grogg explained that he expects a red line drawing set to be maintained during construction for the record set. He explained that Duke, S&ME, and EGI should all be in agreement on the red line drawing set.
11. **Use of Site**: Fred Brown explained that EGI plans to use the entrance across from Belews Creek Steam Station main entrance for the construction entrance and equipment and material deliveries. He also explained that EGI plans to use WSP Sells to perform survey work. Ken Daly recommended that EGI spot check site control based on as-built surveys to verify both coordinates and elevations.
12. **Other Business**: During the time of permit discussion, Kim Benson said that NCDENR was notified of the project start up and that they will likely be visiting the site. The group discussed possible visitors during construction from NCDENR, Duke, and S&ME. The group discussed and agreed that all visitors must check-in and sign in at the Duke office, check in with EGI's superintendent, Bob Lynn, and have an escort who is familiar with construction site.

Meeting adjourned by consensus at 11:00 A.M.

MEMORANDUM

TO: Attendees

CC: None

FROM: Kyle Baucom, Ken Daly; S&ME, Inc.

DATE: June 23, 2011

SUBJECT: **June 15, 2011 Construction Meeting – Discussion Summary**
Pine Hall Road Closure Retrofit
Duke Energy – Belews Creek Steam Station
S&ME Project No. 1356-07-017 Ph. 05

MEETING ATTENDEES:

Duke Energy (Duke): Kim Benson; Vanessa Cano; David Grogg

S&ME, Inc. (S&ME): Jimmy Addis; Kyle Baucom; Ken Daly

Earnhardt Grading, Inc. (EGI): Fred Brown; Bob Lynn

This discussion summary is intended to provide a general summary of the meeting. This discussion summary is based on the notes and memory of the authors and is not intended to be a rigorous and complete meeting record. The meeting began at approximately 1:00 P.M.

DISCUSSION ITEM SUMMARY:

1. **Level 1 Safety Assessment:** Kim Benson conducted a Level 1 safety assessment.
2. **Prior Meeting Summary:** There were no comments on the June 7, 2011 pre-construction meeting summary. Ken Daly explained that S&ME will finalize the meeting summary and send it to the meeting attendees.
3. **Safety & Environmental:**
   - 3.1 Near Misses – Recordable Injuries: No near misses or recordable injuries were reported during the previous week.
   - 3.2 Job Hazard Analysis – Status: Fred Brown explained that the JSHAs were finalized following Duke review. He also explained that EGI's JSHA-6 references S&ME's Standard Operating Procedures in the "Run Over, Struck By and Work Zone Procedures" manual. He requested an electronic copy of this manual to be used in conjunction with JSHA-6. Ken Daly explained that S&ME would provide the manual to EGI.

3.3 Erosion and Sediment Control: Parties agreed that during construction EGI will perform weekly E&SC inspections on Mondays and after 0.5-inch rainfall events. Bob Lynn explained that he will keep a site copy of E&SC plan and inspection reports and provide copies to David Grogg.

3.4 Rainfall Records: Fred Brown explained that a rain gauge would be on site that afternoon, and that EGI would install it in an appropriate location.

3.5 Spill Reporting: No spills were reported during the previous week.

3.6 Clarification – Hot Work Permits: David Grogg explained that Duke and S&ME could discuss the hot work permit process following the meeting. Following the meeting, David Grogg reviewed the hot work permit paperwork, and parties agreed to fill out the paperwork every Monday.

4. **Schedule Update and Progress Report**:

4.1 Construction progress: Fred Brown explained that some materials and equipment had been delivered to the site. He explained that EGI would begin downdrain excavation next Monday, replace downdrain pipe on Tuesday, and excavate to expose pipe around DI-6 and 7 on Wednesday. He explained that Plastic Fusion Fabricators (PFF) would have a person on site next Tuesday, and he would need to go through site safety orientation. Fred Brown explained that he would follow up with PFF personnel to schedule orientation. He explained that he would also send out a revised schedule.

4.2 Schedule updates: This subject is included in Section 4.1.

4.3 Look ahead: This subject is included in Section 4.1.

4.4 Potential changes or delays: Fred Brown explained that mar mac couplers are not manufactured in 6-inch or 8-inch pipe diameters. He proposed using ADS watertight connections. Ken Daly requested that EGI submit the ADS watertight connection information and S&ME would consider using these connections.

5. **CQA**: Parties agreed to collect bulk soil samples from the borrow area to begin soils laboratory testing prior to the start of construction.

6. **Submittals, RFIs, and ROIs**: Ken Daly explained that Submittals 1 through 4 had been approved. He explained EGI should clarify rebar and grate sizes in Submittal 5. Fred Brown asked which submittals EGI had not yet been submitted to S&ME. Kyle Baucom explained that MQC test results were outstanding. He explained that S&ME would review submittals and specifications to evaluate if there were outstanding submittals.

7. **Payment and Changes**: This subject was not discussed.

8. **Documentation for payment**: This subject was not discussed.

9. **Change Orders**: This subject was not discussed.

10. **Roundtable**: Kim Benson requested that trash cans and/or dumpsters be covered due to wildlife. Kim Benson explained that “Edge of Liner” markers would be installed following construction. Fred Brown explained that EGI would remove and replace existing “Edge of Waste” markers.

11. **Action Register**: Ken Daly reviewed the action items from the meeting. The revised action item register is attached. The meeting adjourned by consensus at 1:45 P.M.

MEMORANDUM

TO: Attendees

CC: None

FROM: Kyle Baucom, Ken Daly; S&ME, Inc.

DATE: July 5, 2011

SUBJECT: **June 22, 2011 Construction Meeting – Discussion Summary**
Pine Hall Road Closure Retrofit
Duke Energy – Belews Creek Steam Station
S&ME Project No. 1356-07-017 Ph. 05

MEETING ATTENDEES:

Duke Energy (Duke): Kim Benson; Vanessa Cano; David Grogg

S&ME, Inc. (S&ME): Jimmy Addis; Kyle Baucom; Ken Daly

Earnhardt Grading, Inc. (EGI): Fred Brown; Jamie Lineberger; Bob Lynn

This discussion summary is intended to provide a general summary of the meeting. This discussion summary is based on the notes and memory of the authors and is not intended to be a rigorous and complete meeting record. The meeting began at approximately 1:00 P.M.

DISCUSSION ITEM SUMMARY:

1. **Level 1 Safety Assessment:** David Grogg conducted a Level 1 safety assessment.
2. **Prior Meeting Summary:** There were no comments on the June 15, 2011 construction meeting summary. S&ME will finalize the meeting summary and send it to the meeting attendees.
3. **Safety & Environmental:**
   - 3.1 Near Misses – Recordable Injuries: No near misses or recordable injuries were reported during the previous week. During this time, David Grogg explained that Duke is in the process of informing 911 responders of the project and project location. He explained that, until the 911 responders are informed of the project, the control room should still be the first point of contact in the event of an emergency.
   - 3.2 Job Hazard Analysis – Status: Fred Brown explained that the JSHAs were finalized and that they are reviewed prior to performing the corresponding tasks.

3.3 Erosion and Sediment Control: Ken Daly asked if a hard copy of the E&SC Plan was on-site. Fred Brown explained there was not a hard copy on-site, but he would get a hard copy to Bob Lynn to keep on-site.

3.4 Rainfall Records: Bob Lynn explained that the rain gauge is located next to the Conex on a red stake. He also explained that there was no overnight rainfall.

3.5 Spill Reporting: No spills were reported during the previous week.

4. **Schedule Update and Progress Report**:

4.1 Construction progress: Fred Brown explained that 18-inch and 24-inch diameter down drain pipes had been replaced between drop inlets 1, 2, and 3. He explained that seepage diaphragm construction was in progress, and it should be complete by the end of the week. He explained that EGI intends to seed disturbed areas as they go. He explained that EGI plans to start Type 1 repair on the western end on Monday. He requested to work 11-hour days from 7:00 A.M. to 6:00 P.M. David Grogg and Kim Benson agreed to working 11-hour days.

4.1.1 Attendees discussed cleanout and restoration of Channel C-7. Ken Daly explained that the channel should be restored to the original dimensions and slope. He also explained that any depressed areas of accumulated ash within the channel should be removed.

4.1.2 Attendees discussed the logistics of the Type 2 cover system repair. Fred Brown explained that EGI would monitor the weather forecast for a 3 to 4 day window of dry weather. He explained that EGI would minimize the impacted area and take the necessary precautions for rain if necessary. Ken Daly explained that depending on the condition of the ash subgrade, sloughing may occur and overexcavation may be necessary. David Grogg and Kim Benson agreed that excavated ash should be disposed of in the ash basin.

4.2 Schedule updates: This subject is included in Section 4.1.

4.3 Look ahead: This subject is included in Section 4.1. Fred Brown explained that he would be on vacation from July 2nd through July 16th. Following the meeting, he also explained that Jamie Lineberger would be on vacation from July 10th to July 16th.

4.4 Potential changes or delays: No potential change or delays were anticipated in the project schedule.

5. **CQA**: Jimmy Addis explained that density testing had been performed on down drain pipe backfill, and the test results indicated sufficient compaction. Kyle Baucom explained that laboratory standard Proctor tests from the bulk samples were in progress and test results should be available by the end of the week.

6. **Submittals, RFIs, and ROIs**: Fred Brown explained that MQC test results would be submitted as they are available. He explained that seeding and soil supplement submittals would be submitted following soil laboratory testing.

7. **Payment and Changes**: Attendees did not have any payment issues or changes to discuss.

8. **Documentation for payment**: Kim Benson explained that the estimated project progress should be reported to her by the end of the month. She also explained that EGI and S&ME should report monthly on-site hours for the project.

9. **Change Orders**: Ken Daly explained that S&ME was in the process of preparing a formal Notice of Change for the down drain retrofit. He explained that a soil-bentonite mix should be constructed at the downstream edge of the seepage diaphragms. He also requested that the perforated seepage diaphragm pipes should have approximately 3 to 4 times as many perforations as the pipe observed in the field.
10. **Roundtable**: Attendees discussed the excavation around drop inlet 7 in the area where the camera inspection showed that water was entering the pipe. Ken Daly explained that EGI excavated around the southern side of the southern pipe, and there was no apparent damage to the pipe joint that would indicate water could enter into the down drain pipe. He explained that soil was excavated to the geosynthetics in this area. He explained that the moisture content of the soil increased from dry to moist-to-wet with the depth of soil. Kim Benson explained that she preferred to try to address this area. EGI recommended, and the group agreed to wrap the pipe joint on both down drain pipes with a sealant.
11. **Action Register**: Ken Daly reviewed the action items from the meeting. The revised action item register is attached.

The meeting adjourned by consensus at 2:00 P.M.

MEMORANDUM

TO: Attendees

CC: None

FROM: Kyle Baucom, Ken Daly; S&ME, Inc.

DATE: July 13, 2011

SUBJECT: **June 29, 2011 Construction Meeting – Discussion Summary**
Pine Hall Road Closure Retrofit
Duke Energy – Belews Creek Steam Station
S&ME Project No. 1356-07-017 Ph. 05

MEETING ATTENDEES:

Duke Energy (Duke): Kim Benson; David Grogg

S&ME, Inc. (S&ME): Jimmy Addis; Kyle Baucom

Earnhardt Grading, Inc. (EGI): Fred Brown; Jamie Lineberger; Ron Love, Bob Lynn

This discussion summary is intended to provide a general summary of the meeting. This discussion summary is based on the notes and memory of the authors and is not intended to be a rigorous and complete meeting record. The meeting began at approximately 1:00 P.M.

DISCUSSION ITEM SUMMARY:

1. **Level 1 Safety Assessment:** Kim Benson conducted a Level 1 safety assessment.
2. **Prior Meeting Summary:** There were no comments on the June 22, 2011 construction meeting summary. S&ME will finalize the meeting summary and send it to the meeting attendees.
3. **Safety & Environmental:**
   - 3.1 Near Misses – Recordable Injuries: No near misses or recordable injuries were reported during the previous week.
   - 3.2 Job Hazard Analysis – Status: David Grogg explained that EGI was in the process of revising the JSHA 001 for trenching excavation activities. He explained that the revised JSHA would address EGI personnel in the vicinity of moving equipment. David Grogg also requested weekly safety report e-mails from Ron Love. Meeting attendees agreed that David Grogg would clarify

Duke's expectations for the weekly safety report e-mails, and Ron Love would provide the weekly safety report e-mails to Duke.

3.3 Erosion and Sediment Control (E&SC): Meeting attendees discussed E&SC issues at Channel C6 and at the down drain repairs area.

3.3.1 Kyle Baucom explained that he observed Channel C6 prior to the meeting, and he explained that the channel was repaired with DS75 temporary matting rather than the C350 permanent matting specified in the Channel Schedule on Drawing C2. He explained that two options consisted of installing the specified C350 matting in the channel or installing riprap in the channel (similar to the channel upstream). Kim Benson requested that S&ME look into the design calculation to see how the C350 matting maximum permissible shear stress compared to the calculated shear stress. Kyle Baucom explained that S&ME would look into the calculation.

3.3.2 Kyle Baucom explained that he observed an erosion rill on the slope in the down drain repair area. He explained that it was located between Drop Inlet 2 and 3 and to the right of the repair area (facing down slope). He requested that EGI repair this erosion rill to prevent further erosion in this area. Fred Brown explained that EGI would repair the erosion rill.

3.4 Rainfall Records: Kyle Baucom explained that there had been 3.5 inches of rainfall in the previous two nights (2 inches on Monday night and 1.5 inches on Tuesday night).

3.5 Spill Reporting: No spills were reported during the previous week.

4. Schedule Update and Progress Report:

4.1 Construction progress: Fred Brown explained that EGI had performed Type 1 repair on the north west perimeter from station 0+00 to the PD-2 junction box location.

4.2 Schedule updates: Fred Brown explained that the junction boxes are ready to be shipped to the site. However, EGI is waiting on the aluminum grating before shipping to the site. He explained that EGI would continue with Type 1 repair in the Channel C2 area and on the north east perimeter.

4.3 Look ahead: Fred Brown explained that Plastic Fusion indicated 2 days of geosynthetics repair for Type 2 repair work. He explained that Plastic Fusion personnel would be ready for site safety orientation on July 14th. He also explained that EGI had obtained the 10-mil sacrificial geomembrane from Marshall Steam Station.

4.4 Potential changes or delays: Fred Brown explained that the actual anchor trench dimensions and locations were not the same as the plan drawings (24 inches tall by 18 inches wide; 9 feet from channel centerline). He explained that he anticipated exceeding material and excavation quantities associated with the Type 1 repair. Jamie Lineberger requested that S&ME verify that existing geosynthetics limits is based on an as-built survey. David Grogg requested that EGI provide S&ME with perimeter drain pipe survey shots to compare to the plan locations. Meeting attendees agreed that a change order may need to be prepared.

5. CQA: Kyle Baucom explained that laboratory testing was performed on structural fill material from the borrow area.

6. **Submittals, RFIs, and ROIs**: Kyle Baucom explained that geomembrane and geocomposite MQC test results, installer's resumes, and seeding and soil supplement submittals were the remaining submittals. Fred Brown explained that these items would be submitted as they were available.
7. **Payment and Changes**: This subject is included in Section 4.4. Fred Brown explained that EGI would submit an invoice to Duke on Friday.
8. **Documentation for payment**: This subject is included in Section 4.4.
9. **Change Orders**: This subject is included in Section 4.4.
10. **Roundtable**: David Grogg asked if the extra hour of work that Duke allowed is helping. Fred Brown explained that it is helping EGI to remain on schedule and allow workers to take breaks during the day.
11. **Action Register**: Kyle Baucom reviewed the action items from the meeting. The revised action item register is attached.

The meeting adjourned by consensus at 2:00 P.M.

MEMORANDUM

TO: Attendees

CC: None

FROM: Kyle Baucom, Ken Daly; S&ME, Inc.

DATE: July 13, 2011

SUBJECT: **July 6, 2011 Construction Meeting – Discussion Summary**
Pine Hall Road Closure Retrofit
Duke Energy – Belews Creek Steam Station
S&ME Project No. 1356-07-017 Ph. 05

MEETING ATTENDEES:

Duke Energy (Duke): Kim Benson; David Grogg

S&ME, Inc. (S&ME): Jimmy Addis; Kyle Baucom; Ken Daly

Earnhardt Grading, Inc. (EGI): Jamie Lineberger; Ron Love, Bob Lynn

This discussion summary is intended to provide a general summary of the meeting. This discussion summary is based on the notes and memory of the authors and is not intended to be a rigorous and complete meeting record. The meeting began at approximately 1:00 P.M.

DISCUSSION ITEM SUMMARY:

1. **Level 1 Safety Assessment:** Kim Benson conducted a Level 1 safety assessment.
2. **Prior Meeting Summary:** Ken Daly explained that the prior meeting summary had been sent out that morning, and S&ME is requesting review and comments by the next meeting.
3. **Safety & Environmental:**
   - 3.1 Near Misses – Recordable Injuries: No near misses or recordable injuries were reported during the previous week.
   - 3.2 Job Hazard Analysis – Status: Ron Love explained that EGI revised JSHA 001 for trenching excavation activities. He also explained that he had reviewed EGI's JSHAs to verify that they are consistent with what is being performed in the field. David Grogg explained that the emergency response procedure now consists of calling 911 first, and then following up by calling the control room.

3.3 Erosion and Sediment Control (E&SC): Kim Benson explained that Mike Thomas with NCDENR Division of Water Quality will be at Belews Creek Steam Station (BCSS) next week for another reason, but that he will likely visit the site while he is at BCSS. Meeting attendees discussed the installation of silt fence outlets and agreed that silt fence outlets should be installed at pipe outlet locations and stockpile locations.

3.4 Rainfall Records: Jamie Lineberger explained that there was 1.25 inches of rainfall on Monday.

3.5 Spill Reporting: No spills were reported during the previous week.

4. Schedule Update and Progress Report:

4.1 Construction progress: Jamie Lineberger explained that EGI had performed Type 1 perimeter drain repair in Channel C1, Channel C2, and the upper portion of Channel C3. He explained that the lower portion of Channel C3 was in progress, and Type 1 perimeter drain repair should be complete by the end of the week.

4.2 Schedule updates: Jamie Lineberger explained that he will send out an updated schedule on Friday.

4.3 Look ahead: Jamie Lineberger explained that EGI plans to start Type 2 perimeter drain repair on Monday. He explained that they planned on having the Type 2 repair area ready for Plastic Fusion by Wednesday. He explained that Plastic Fusion would be on site on Wednesday morning at 7:00 A.M. for the site safety orientation, and they would perform geosynthetics repair through the end of the day on Thursday.

4.4 Potential changes or delays: Jamie Lineberger explained that EGI was still waiting on MQC test results for the geomembrane and geocomposite. Ken Daly explained that he was comfortable with shipping the geosynthetics prior to receiving MQC test results if there was a potential delay in the schedule. Jamie Lineberger explained that weather was also a potential delay. David Grogg asked how Plastic Fusion charges their time during weather delays. Jamie Lineberger explained that if all parties involved monitored and agreed to the weather forecast and start date, then Plastic Fusion would not charge their time during a weather delay.

5. CQA: Meeting attendees also agreed that S&ME's tensiometer will be stored in the Conex on site and powered by a Plastic Fusion or EGI generator. Ken Daly explained that the manufacturer's staple pattern should be followed in the installation of the C350 permanent matting and the DS75 temporary matting. Kim Benson requested that EGI repair a small eroded area around the concrete apron at Drop Inlet 1.

6. Submittals, RFIs, and ROIs: David Grogg requested that S&ME prepare a checklist of items and suggested that all parties perform a walk through to verify that items were installed or constructed correctly and evaluate which items have been completed. Ken Daly suggested performing this walk through sometime next week while Type 2 repair was in progress.

7. Payment and Changes: Meeting attendees discussed invoicing, Channel C6 stabilization, and perimeter drain dimensions.

7.1 Kim Benson explained that she had received EGI's invoice by e-mail, but not through the Duke invoicing system. Ken Daly requested that Kim Benson send S&ME the invoice for review of payment and quantities.

7.2 Ken Daly explained that S&ME reviewed the calculation for Channel C6, and that C350 matting is stable with wattles during the unvegetated condition. He requested that EGI remove the existing matting in Channel C6, restore grades with a more cohesive soil (if available), and install the C350 matting per the manufacturer's installation guide. Kim Benson requested that EGI perform this repair work as soon as possible to see how the C350 matting performs throughout the remainder of the project. Meeting attendees agreed that EGI will keep Change Order 2 in the event that Channel C6 needs to be stabilized with riprap at the end of the project.

7.3 Ken Daly explained that the installed perimeter drain dimensions were wider and deeper than the 18-inch width and 24-inch depth in some areas, which was leading to an increased quantity of #57 stone. He explained that EGI should try to stay consistent with the planned perimeter drain dimensions through the remainder of the project. He suggested filling the bottom 24 inches with #57 stone and backfilling over the drain with soil. He explained that the geomembrane would be cut at the same location, but the geocomposite would need to be extended more than 12 inches to maintain the 12 inches of geocomposite runout into the perimeter drain. Meeting attendees discussed how to quantify the change. Jamie Lineberger explained that EGI would provide #57 stone tickets with Change Order 1.

8. **Documentation for payment**: Meeting attendees discussed how to quantify excavation during Type 2 repair. Attendees agreed that all parties involved would agree on field measurements of average lengths, widths, and depths.
9. **Change Orders**: This subject is included in Section 7.
10. **Roundtable**: Meeting attendees did not discuss any additional items.
11. **Action Register**: The revised action item register is attached.

The meeting adjourned by consensus at 2:15 P.M.

MEMORANDUM

TO: Attendees

CC: None

FROM: Kyle Baucom, Ken Daly; S&ME, Inc.

DATE: July 22, 2011

SUBJECT: **July 12, 2011 Construction Meeting – Discussion Summary**
Pine Hall Road Closure Retrofit
Duke Energy – Belews Creek Steam Station
S&ME Project No. 1356-07-017 Ph. 05

MEETING ATTENDEES:

Duke Energy (Duke): Kim Benson; David Grogg

S&ME, Inc. (S&ME): Kyle Baucom; Ken Daly

Earnhardt Grading, Inc. (EGI): Ron Love, Bob Lynn

This discussion summary is intended to provide a general summary of the meeting. This discussion summary is based on the notes and memory of the authors and is not intended to be a rigorous and complete meeting record. The meeting began at approximately 2:00 P.M.

DISCUSSION ITEM SUMMARY:

1. **Level 1 Safety Assessment:** David Grogg conducted a Level 1 safety assessment. He explained that one unit at the plant was running and that one unit was down at this time.
2. **Prior Meeting Summary:** Meeting attendees had no additional comments on previous two construction meeting summaries. Ken Daly explained that S&ME will finalize these two meeting summaries.
3. **Safety & Environmental:**
   3.1 Near Misses – Recordable Injuries: No near misses or recordable injuries were reported during the previous week.
   3.2 Job Hazard Analysis – Status: Ron Love explained that he reviewed the emergency response process. David Grogg explained that 911 is the first point of contact in the event of an emergency. He requested that Ron Love review and reiterate safety processes with EGI personnel given the change in mindset that

comes towards the end of a project. Kim Benson explained that the language barrier could also be an issue with Plastic Fusion personnel.

3.3 Erosion and Sediment Control (E&SC): Bob Lynn explained that E&SC inspections were being performed and up to date.

3.4 Rainfall Records: Bob Lynn explained that 0.5 inches of rainfall were recorded on Monday morning following the weekend rainfall.

3.5 Spill Reporting: No spills were reported during the previous week.

4. **Schedule Update and Progress Report**:

4.1 Construction progress: Bob Lynn explained that EGI was performing Type 2 perimeter drain repair, and they should be done restoring subgrade by the end of the day.

4.2 Look ahead: Bob Lynn explained that EGI planned to finish Channel B-2 repair, Channel C-7 repair, and install perimeter drain in the Type 2 repair area and placed 2 feet of protective cover over the geosynthetics. Meeting attendees agreed that a 6-inch layer of the stockpile material (previously protective cover material) would be placed on top of the geosynthetics to protect the geosynthetics from the rockier borrow area material.

4.3 Potential changes or delays: Bob Lynn explained that he did not anticipate any potential changes or delays other than possible weather impacts.

5. **CQA**: Ken Daly explained the MQC test results for geomembrane and geocomposite were consistent with project specifications. He asked when the geocomposite would be on site. Bob Lynn explained that Plastic Fusion was picking up the geocomposite and would deliver it to the site. Ken Daly explained that compaction tests had been performed on the restored subgrade, and the compaction test results for tests performed to date met or exceeded 95 percent compaction. Bob Lynn explained that the skid steer would be used to smooth grade the restored subgrade prior to geosynthetics installation. He also explained that the surveyor was scheduled to be on site to perform both the restored subgrade survey and the geomembrane as-built survey.

6. **Submittals, RFIs, and ROIs**: Ken Daly explained that S&ME would review project specifications to determine if an as-built survey was necessary for Channel B-2. He also explained that the specifications call for a camera inspection as a closeout submittal for HDPE piping.

7. **Documentation for payment**: Ken Daly explained that S&ME reviewed EGI's invoice and agreed with the quantities.

8. **Change Orders**: Ken Daly reviewed the project Change Orders. He explained that Change Order Request (COR) No. 1 will be finalized following perimeter drain repair. He explained that COR No. 2 will be kept on hold to see how the C350 permanent matting installed in Channel C-6 performed throughout the remainder of the project. Kim Benson stated that EGI should proceed with COR No. 3 to replace the riprap apron at the upslope end of Channel C-7. She explained that she will provide a formal response sometime after the meeting.

9. **Roundtable**: David Grogg explained that Duke fills out a contractor evaluation form with each project, and he said that Duke would share this at the last construction meeting. Ken Daly asked if Duke personnel had any comments regarding the Closeout Checklist. Duke personnel explained that they had no comments or

additions to the Closeout Checklist. Ken Daly said that Jimmy Addis would perform a site walkthrough, as time allows, to complete the Closeout Checklist. He explained that S&ME and Duke personnel will set aside some time either before or after next week's construction meeting to perform a site walkthrough and complete the Closeout Checklist.

10. Action Register: The revised action item register is attached.

The meeting adjourned by consensus at 2:45 P.M.

MEMORANDUM

TO: Attendees

CC: None

FROM: Kyle Baucom, Ken Daly; S&ME, Inc.

DATE: July 22, 2011

SUBJECT: **July 20, 2011 Construction Meeting – Discussion Summary**
Pine Hall Road Closure Retrofit
Duke Energy – Belews Creek Steam Station
S&ME Project No. 1356-07-017 Ph. 05

MEETING ATTENDEES:

Duke Energy (Duke): Kim Benson

S&ME, Inc. (S&ME): Jimmy Addis, Kyle Baucom; Ken Daly

Earnhardt Grading, Inc. (EGI): Fred Brown, Jamie Lineberger, Ron Love, Bob Lynn

This discussion summary is intended to provide a general summary of the meeting. This discussion summary is based on the notes and memory of the authors and is not intended to be a rigorous and complete meeting record. The meeting began at approximately 1:00 P.M.

DISCUSSION ITEM SUMMARY:

1. **Level 1 Safety Assessment:** Kim Benson conducted a Level 1 safety assessment.
2. **Prior Meeting Summary:** Meeting attendees had no additional comments on the previous construction meeting summary. Kyle Baucom stated that S&ME will finalize the previous meeting summary.
3. **Safety & Environmental:**
   - 3.1 Near Misses – Recordable Injuries: No near misses or recordable injuries were reported during the previous week.
   - 3.2 Job Hazard Analysis – Status: Ron Love explained that the Job Hazard Analyses are consistent with field activities.
   - 3.3 Erosion and Sediment Control (E&SC): Kim Benson stated that NCDENR personnel would be on site on Friday, and they would perform an E&SC inspection at the site. She explained that during a Duke site walkthrough, it was noted that the slopes within the borrow area appeared to be steeper than 2H:1V

slopes, which was one of the modifications in the E&SC approval letter. Bob Lynn said that EGI had laid back these slopes within the borrow area, and stated that Sides Seeding would be seeding the borrow area and Channel B2 repair area on Thursday morning. He also explained that, at Duke's request, EGI installed leftover wattles around the perimeter drain junction boxes. Kyle Baucom asked if the Type 2 repair area around the Bench B5B and Channel C3 intersection was going to be seeded. Bob Lynn said that Sides Seeding would also seed this area on Thursday morning, and EGI would then install the remaining DS75 temporary matting in this area.

3.4 Rainfall Records: Bob Lynn explained that 0.75 inches of rainfall had occurred overnight on Tuesday.

3.5 Spill Reporting: No spills were reported during the previous week.

4. **Schedule Update and Progress Report**:

4.1 Construction progress: Fred Brown explained that seeding was going to be performed on Thursday, and EGI would be in the process of demobilizing and leaving the site.

4.2 Look ahead: With the project coming to a close, this subject was not discussed.

4.3 Potential changes or delays: During this time, Fred Brown asked if a camera observation needed to be performed on the down drain pipes. Kim Benson requested that EGI schedule a camera observation. Fred Brown said that he would contact Jet Clean to schedule a camera observation. He also explained that they had been through the site orientation for Belews Creek Steam Station for 2011. Ken Daly requested that S&ME have someone on site to observe the camera observation work.

5. **CQA**: Kyle Baucom explained that compaction tests had been performed on the restored subgrade, and the compaction test results for tests performed to date met or exceeded 95 percent compaction. He also stated that the geomembrane construction quality assurance forms were completed for the geomembrane installation during Type 2 perimeter drain repair. Ken Daly explained that the Geosynthetic Installer written certification required in the closeout submittal section (Section 02672, Part 1.5.B) could be waived. Jamie Lineberger said that the geomembrane as-built survey was complete, but he was in the process of labeling the survey shots. He explained that he would send out the as-built drawing when it was complete.

6. **Submittals, RFIs, and ROIs**: Fred Brown said that he would send the remaining submittals from the seeding and soil supplements specification section.

7. **Documentation for payment**: Meeting attendees discussed documentation for payment for the areas of Type 1 and 2 perimeter drain repair. Attendees agreed that documentation for payment would be determined from the as-built surveys.

8. **Change Orders**: Meeting attendees discussed the three Change Order Requests (COR) associated with the project. Fred Brown explained that EGI did not exceed material quantities and COR No. 1 would not be issued. Meeting attendees agreed that the COR No. 2 would not be executed since the C350 permanent matting installed in Channel C6 appeared to be performing well. Fred Brown explained that COR No. 3 was authorized and executed.

9. **Roundtable**: Kim Benson brought up the issue of post construction expectations for E&SC maintenance and removal. Kyle Baucom explained that the removal of silt

fence and silt fence outlets upon vegetation establishment is included in the scope of work. He also read Specification Section 02924, Part 3.7 to better clarify expectations for E&SC maintenance. Fred Brown explained that Kim Benson should contact him if any post construction E&SC issues arose. He said that EGI would also bring a crew to remove silt fence and silt fence outlets at Kim Benson's request.

10. **Action Register**: Kim Benson explained that EGI and S&ME should also submit on site hours for the month of July. The revised action item register is attached.

The meeting adjourned by consensus at 1:35 P.M.

Field Reports

S&ME

JOB NO. 56-07-017
SHEET NO. 1/1
DATE 6/15/11

JOB NAME PINE HALL ROAD ASH LANDFILL - RETROFIT
COMPUTED BY KTD
SUBJECT SITE VISIT
CHECKED BY —

≈ 12:20 ARRIVE ON W/ K. BARROW, K. DALY

- DISCUSS W/ F BROWN - LIMITED ON SITE ACTIVITY TODAY
- DRIVE AROUND LANDFILL PERIMETER, OBSERVE MATERIALS STAGED AT SE SITE.

≈ 12:50 DEPART UP SITE FOR STATION OFFICE & PROGRESS MEETING.

≈ 13:40 WRAP UP CONST. MEETING.

~ REVIEW VARIOUS PINE & CRAIG ROAD ASH LANDFILL WITH KIMBERSON; D. GROGG; T. LEAP....

≈ 14:50 DEPART SITE.

≈ 17:10 ARRIVE @ OFFICE.

KTD

S&ME
9751 Southern Pine Blvd
Charlotte, NC 28273
(704) 523-4726
(704) 525-3953 fax

Field Report

Date	Job No.
June 20, 2011	1356-07-017-05
Project/Location	
PHR Ash LF Closure Cover System Retrofit	
Contractor	**Weather/Temp**
Earnhardt	PC/68-91°
Present at Site	
Bobby Lynn David Gragg	
Time	**Mileage**
11.0	40.0

To: File

Services Performed

- ☐ Concrete Testing
- ☐ Cylinder Pickup
- ☐ Asphalt Testing
- ☐ Steel Testing
- ☐ Asphalt Coring
- ☐ Concrete Coring
- ☐ Undercut Evaluation
- ☐ Foundation Evaluation
- ☐ Proofrolling
- ☐ In-Place Density
- ☐ Other (Explain)

Observations/Remarks:

S&ME rep. onsite @ 7:00am. Sign in on contractors site list. Go over today's activities w/ Bobby. Go to BGSS and get David's signature on hot work permit, we both went to control room and turned in. Observed contractor as they uncovered/exposed 24inch dbl. walled ADS pipe between DI-3 to DI-2 this am. One tear in the 40mil liner just South of DI-3 will require patching. This afternoon compacted soil cover was removed from DI-2 to w/in 20ft. North of DI-1, exposing 18inch dbl. walled ADS pipe. Two areas on this run where connections were made looks like leak points ① on bell thats egg shaped ~3rd joint from DI-1 ② 1st coupling from DI-1 ~gap in bottom of pipe due to the way it was cut. Contractor also started restoration work on channel C7 w/a skid steer, rubber tire loader and two offroad trucks. Sediment out of C7 hauled to ash basin.

Equipment onsite: CAT 307D trackhoe — Left site @ 5:30.
CAT 264 skid steer
2 CAT 730 offroad trucks
John Deere 544 frontend loader
Ram X

On-Site Representative/Company

Jimmy Addison
S&ME Personnel

Disclaimer: The presence of S&ME at the project site shall not be construed as an acceptance or approval of activities at the site. S&ME is at the project site to perform specific services and has certain responsibilities which are limited to those specifically authorized in our agreement with our client. In no event shall S&ME be responsible for the safety or the means and methods of other parties at the project site. **The information presented in this field report has not been reviewed by an engineer and is to be considered preliminary.**

S&ME Form FRLF03

S&ME
9751 Southern Pine Blvd
Charlotte, NC 28273
(704) 523-4726
(704) 525-3953 fax

Field Report

Date: June 21, 2011	Job No.: 1356-07-017 PH05
Project/Location: PHR Ash LF Closure Cover System Retrofit	
Contractor: Earnhardt / PFF	Weather/Temp: Sunny /
Present at Site: Bobby Lynn, Johnny Wade	
Time: 11.5	Mileage: 40.0

To: File

Services Performed

- ☐ Concrete Testing
- ☐ Cylinder Pickup
- ☐ Asphalt Testing
- ☐ Steel Testing
- ☐ Asphalt Coring
- ☐ Concrete Coring
- ☐ Undercut Evaluation
- ☐ Foundation Evaluation
- ☐ Proofrolling
- ☐ In-Place Density
- ☐ Other (Explain)

Observations/Remarks:

Onsite @ 7am. Observe excavation to uncover remaining 18 inch dbl. walled ADS pipe up to DI-1. Trench laid back to safe up. Contractor cut the ADS pipe at DI's 1, 2 and 3 leaving about 4 inches extending out of the DI's. All 18 and 24 inch pipe between DI-1 and DI-3 were removed, this am. Contractor cut and removed existing geocomposite drainage layer underneath downdrain pipe at two areas ① North of DI-1 10ft. each side of crest ② North of DI-2 ~3ft. upstream & 10ft. downstream of crest. Inspected 40mil liner, no damage to exposed sections. PFF fused 18" SDR-32.5 HDPE pipe (101ft.) w/ no elbows, for run between DI-1 to DI-2. EGI used two trackhoes and a front end loader to install this run. PFF patched a tear in the 40mil liner just upstream (8ft.) of DI-3, out of the cradle area on the slope. No QC performed, observed repair ~ tear was 3"x3" ~ patch 8"x8" round. Geocomposite laid back over and zip tied, and a 2'x2' piece of 8 oz/sy non-woven geotextile laid over. PFF fused 24" SDR-32.5 HDPE pipe (123.5ft.) w/ no elbows for run between DI-2 to DI-3. EGI installed 24" pipe run late today. Left jobsite @ 5:40pm.

On-Site Representative/Company

Jimmy Adkins
S&ME Personnel

Disclaimer: The presence of S&ME at the project site shall not be construed as an acceptance or approval of activities at the site. S&ME is at the project site to perform specific services and has certain responsibilities which are limited to those specifically authorized in our agreement with our client. In no event shall S&ME be responsible for the safety or the means and methods of other parties at the project site. **The information presented in this field report has not been reviewed by an engineer and is to be considered preliminary.**

S&ME Form FRLF03

9751 Southern Pine Blvd
Charlotte, NC 28273
(704) 523-4726
(704) 525-3953

Field Report

Date	Job No.
06/21/2011	1356-07-017-05

Project/Location
Pine Hall Road LF Cover System Retrofit

Contractor	Weather/Temp
Earnhardt Grading, Inc.	Sunny, 90s

Present at Site
Kyle Baucom, Jimmy Addis, S&ME, Inc.; Bob Lynn, EGI; Johnny Page, Plastic Fusion

Time	Mileage
9:00 to 4:00	230 mi.

Services Performed

- ☐ Concrete Testing
- ☐ Cylinder Pickup
- ☐ Asphalt Testing
- ☐ Steel Testing
- ☐ Asphalt Coring
- ☐ Concrete Coring
- ☐ Undercut Evaluation
- ☐ Foundation Evaluation
- ☐ Proofrolling
- ☐ In-Place Density

Other (Explain)
Construction oversight

Observations/Remarks:

Arrived on site at 9:00 and signed in at the lobby. Met with Kim Benson to pick up hard copies of Duke review of Craig Road LF site study report. Arrived at Pine Hall Road LF at 9:30. Upon arrival, EGI had excavated and removed pipe from DI-3 to DI-2 and from DI-2 to the slope crest downstream of DI-1. They were in process of excavating and removing pipe from the slope crest back up to DI-1. Jimmy Addis and Bob Lynn mentioned that they noticed wet spots both upstream and downstream of DI-2 during excavation. Bob Lynn also mentioned that he noticed an erosion rill that undermined the slab top at DI-3. EGI excavated down to the geocomposite with shovels. There was approximately 2-4 inches of soil between the base of the pipe and geosynthetics during the longer stretches of downdrain pipe. Closer to the DIs where the subgrade had been excavated out, there was approximately 12-14 inches of soil between pipe and geosynthetics. There was not a noticeable difference in moisture content between the soil located at the base of the downdrain pipe and the soil that had been excavated out above the pipe. Johnny Page with PFF arrived at 11:00. Following lunch, EGI began removing geocomposite in the areas of the seepage diaphragm and PFF began fusion welding SDR 32.5 HDPE downdrain pipe. Approximately 101 feet of 18-inch diameter downdrain pipe was installed between DI-1 and DI-2. There was approximately 3-4 inches of clearance between the edge of the existing ADS pipe connected to the DI and the edge of the new solid wall pipe to allow for area to perform extrusion weld on inside of DI. At about 2:30, EGI discovered a hole in the geocomposite and the liner. The hole was located approximately 5 feet upstream of DI-3. Facing upstream, the hole was located on the right at the slope crest of the side slope in the depressed downdrain area. PFF patched the geomembrane with an extrusion weld. The geocomposite was zip tied back together, and a piece of 8 oz/sy nonwoven geotextile was placed over the geocomposite and covered with soil. Left site and signed out at lobby at approximately 4:00. EGI was in process of installing approximately 123 feet of 24-inch diameter downdrain pipe between DI-2 and DI-3.

END OF REPORT

File 1356-07-017-05
On-Site Representative/Company

Kyle Baucom
S&ME Personnel

S&ME

JOB NO. 56-07-017
SHEET NO. 1/2
DATE 6/22/11

JOB NAME PINE HALL ROAD
COMPUTED BY KJD
SUBJECT SITE VISIT
CHECKED BY

≈ 10:00 Arrive on-site @ BCSS w/ Kyle Bowen. Sign in at BCSS Office.

≈ 10:10 Arrive @ PHR Top Deck, NE Corner. Meet Fred Brown & EZI Crew → observe DI 1 connection. Under pipe to be sealed with bentonite

≈ 10:40 – Begin excavation @ DI 7 w/ CAT 307D
– Safety brief w/ EZI Bobby Lynn before we started.

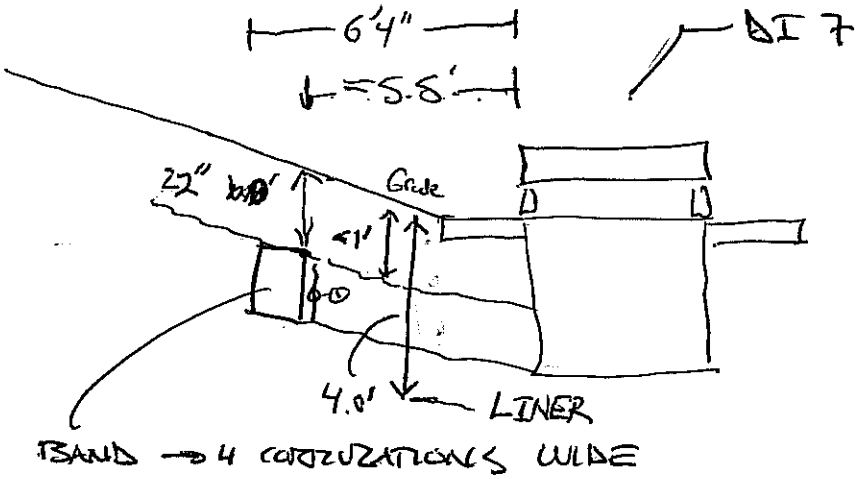

○ DRY
• MOIST
◐ MOIST
◐ MOIST - MH / WET - ML

⊙ MISSING GASH ≈ 1" ON OUTSIDE CORRUGATION

S&ME

JOB NO. 56-07-017

SHEET NO. 2/2

DATE 6/22/11

JOB NAME PHR

SUBJECT CONT'D

COMPUTED BY KSD

CHECKED BY —

DI-3

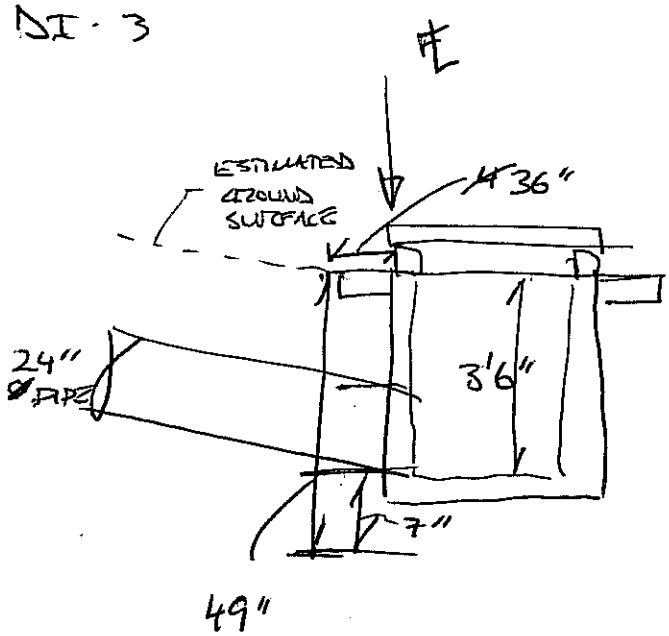

@ 16:00 Departed PHR Site

S&ME
9751 Southern Pine Blvd
Charlotte, NC 28273
(704) 523-4726
(704) 525-3953 fax

Field Report

Date	Job No.
June 22, 2011	1356-07-017-05

Project/Location: PHR Ash LF Closure Cover System Retrofit

Contractor	Weather/Temp
Earnhardt/PFF	PC/73-92°

Present at Site: Bobby Lynn - Fred Brown, Johnny Wade, David Grogg, Ken Daly - Kyle Bancom

Time	Mileage
11.0	40.0

To: File

Services Performed

- ☐ Concrete Testing
- ☐ Cylinder Pickup
- ☐ Asphalt Testing
- ☐ Steel Testing
- ☐ Asphalt Coring
- ☐ Concrete Coring
- ☐ Undercut Evaluation
- ☐ Foundation Evaluation
- ☐ Proofrolling
- ☑ In-Place Density
- ☐ Other (Explain)

Observations/Remarks:

Onsite @ 7am. Observed PFF as they extrusion weld the 18 & 24 inch single wall HDPE downdrain pipe connections to existing 18 & 24 inch double wall ADS pipes inside and outside drop inlets 1, 2 and 3. Could not extrusion weld underneath pipes outside the drop inlets, o.k. w/ engineer to place a soil/bentonite mixture in this area. EGI start soil backfill between DI's 2 & 3. Tried rammax for compaction on each side of the pipe, but it did'nt want to pull up the slope, skid steer used to pull rammax up the slope. Also used skid steer for compaction ~ tracking in. I ran two compaction test today, both passed minimum specifications. Informed Bob of test results. Attend weekly const. meeting. Go around landfill w/ Ken & Kyle, look at type 1 & 2 areas. PFF butt fusion weld 4 inch HDPE pipe (20') for seepage diaphragm, downstream of DI-1. Left site @ 5:30.

On-Site Representative/Company

Jimmy Addis
S&ME Personnel

Disclaimer: The presence of S&ME at the project site shall not be construed as an acceptance or approval of activities at the site. S&ME is at the project site to perform specific services and has certain responsibilities which are limited to those specifically authorized in our agreement with our client. In no event shall S&ME be responsible for the safety or the means and methods of other parties at the project site. **The information presented in this field report has not been reviewed by an engineer and is to be considered preliminary.**

S&ME Form FRLF03

9751 Southern Pine Blvd
Charlotte, NC 28273
(704) 523-4726
(704) 525-3953

Field Report

Date	Job No.
06/22/2011	1356-07-017-05

Project/Location
Pine Hall Road LF Cover System Retrofit

Contractor	Weather/Temp
Earnhardt Grading, Inc.	Sunny, 90s

Present at Site
Kyle Baucom, Ken Daly, Jimmy Addis, S&ME, Inc.; Bob Lynn, EGI; Johnny Page, Plastic Fusion

Time	Mileage
10:00 to 4:00	230 mi.

Services Performed

- ☐ Concrete Testing
- ☐ Cylinder Pickup
- ☐ Asphalt Testing
- ☐ Steel Testing
- ☐ Asphalt Coring
- ☐ Concrete Coring
- ☐ Undercut Evaluation
- ☐ Foundation Evaluation
- ☐ Proofrolling
- ☐ In-Place Density

Other (Explain)
Construction oversight

Observations/Remarks:

Arrived on site at 10:00 and signed in at the lobby with Ken Daly. Walked areas of downdrain replacement. EGI had backfilled pipe with soil in some areas. Jimmy Addis had performed passing density test on backfill. PFF had performed extrusion weld on pipe connections at DIs with the exception of the areas on the exterior of the DI below the pipe. Due to limited space under the pipe, the extrusion weld could not be performed. Ken Daly suggested adding bentonite to soil to be placed under pipe at this location. Ken Daly requested that EGI excavate around an area of pipe between DI-6 and DI-7 where water was observed coming in pipe during a camera inspection. The location was at a pipe joint approximately 5 feet upstream of DI-7 on the right pipe facing downstream. Soil was excavated on the southern half of this pipe. There was a 1-inch cut observed on the exterior corrugation of ADS pipe. Moisture contents ranged from dry at the surficial material to moist to wet at the base of DI-7. See Ken Daly's field report for specific measurements. Had weekly construction meeting at 1:00 with Duke and EGI personnel. See meeting summary for specifics. Following construction meeting, drove back to PHR site to observed seepage diaphragm construction. EGI had to extend most upstream seepage diaphragm to get elevation drop to allow for flow. S&ME personnel drove perimeter road in areas of Type 1 and Type 2 repair to observe these areas. Left site and signed out at lobby at approximately 4:00.

END OF REPORT

File 1356-07-017-05
On-Site Representative/Company

Kyle Baucom
S&ME Personnel

S&ME
9751 Southern Pine Blvd
Charlotte, NC 28273
(704) 523-4726
(704) 525-3953 fax

Field Report

Date	Job No.
June 23, 2011	1356-07-017-05

Project/Location: PHR Ash LF Closure Cover System Repair

Contractor	Weather/Temp
Earnhardt / PFF	Cloudy / 70-88°

Present at Site: Bobby Lynn, Johnny Wade

Time	Mileage
11.5	40.0

To: File

Services Performed

- ☐ Concrete Testing
- ☐ Cylinder Pickup
- ☐ Asphalt Testing
- ☐ Steel Testing
- ☐ Asphalt Coring
- ☐ Concrete Coring
- ☐ Undercut Evaluation
- ☐ Foundation Evaluation
- ☐ Proofrolling
- ☑ In-Place Density
- ☐ Other (Explain)

Observations/Remarks:

Onsite @ 7:15 am. Observed EGI as they excavated to uncover the 18inch double barrel line downstream of DI-3, about 20ft. of the line exposed. They removed 13ft. of the geocomposite on the outersides of each pipe. Did not cut out geocomposite between and underneath the dbl. line, pipes to close together (6") and flush to the ground. I called Kyle B. to inform, he talked w/ Ken D. their recommendation is to place a soil/bentonite mixture between and on the outersides of each pipe, to cut off flow. PFF butt fusing 4" SDR-17 HDPE pipe for seepage diaphragm downstream of DI's 2 & 3. More holes (3/8) added to 4" perforated HDPE drain pipe. PFF made connections of 4" solid HDPE drain pipe to top of down drain lines. EGI installed soil/bentonite mixture underneath and up to the haunch line at all ADS/HDPE pipe connections. All 3 seepage diaphragm installed today, and a soil/bentonite mixture placed downstream of each diaphragm ~18 to 24 inches deep. Monitor backfill between DI's 1 to 2. Perform two compaction test, both passed minimum specifications. Inform Bobby of test results. Left site @ 5:30.

On-Site Representative/Company

Jimmy Addison
S&ME Personnel

Disclaimer: The presence of S&ME at the project site shall not be construed as an acceptance or approval of activities at the site. S&ME is at the project site to perform specific services and has certain responsibilities which are limited to those specifically authorized in our agreement with our client. In no event shall S&ME be responsible for the safety or the means and methods of other parties at the project site. **The information presented in this field report has not been reviewed by an engineer and is to be considered preliminary.**

S&ME Form FRLF03

S&ME
9751 Southern Pine Blvd
Charlotte, NC 28273
(704) 523-4726
(704) 525-3953 fax

Field Report

Date	Job No.
June 24, 2011	1356-07-017-05

Project/Location: PHRAsh LF Closure Cover System Retrofit

Contractor	Weather/Temp
Earnhardt	Sunny 72-89°

Present at Site: Bobby Lynn

Time	Mileage
9.0	115.0

To: File

Services Performed

- ☐ Concrete Testing
- ☐ Cylinder Pickup
- ☐ Asphalt Testing
- ☐ Steel Testing
- ☐ Asphalt Coring
- ☐ Concrete Coring
- ☐ Undercut Evaluation
- ☐ Foundation Evaluation
- ☐ Proofrolling
- ☑ In-Place Density
- ☐ Other (Explain)

Observations/Remarks:

Onsite @ 7am. Observed contractor as they hand excavated between and along the outer edges (13ft.) of the double barrel 18 inch downdrain downstream of DI-3. This is the area where the geocomposite could not be removed, and contractor had to work around the 4 inch seepage diaphragm pipes. After excavation a soil/bentonite mixture was placed back into this area about 6 to 8 inches thick. I monitored completion of downdrain backfill. Four density test run today, all test passed. Informed Bobby of test results. Slopes tracked in and dressed up w/a CAT D5 LGP tractor. Inlet protection put around DI's 1, 2 & 3. Sides Seeding to be onsite Monday. Complete paperwork.

On-Site Representative/Company

Jimmy Addo
S&ME Personnel

Disclaimer: The presence of S&ME at the project site shall not be construed as an acceptance or approval of activities at the site. S&ME is at the project site to perform specific services and has certain responsibilities which are limited to those specifically authorized in our agreement with our client. In no event shall S&ME be responsible for the safety or the means and methods of other parties at the project site. **The information presented in this field report has not been reviewed by an engineer and is to be considered preliminary.**

S&ME Form FRLF03

S&ME
9751 Southern Pine Blvd
Charlotte, NC 28273
(704) 523-4726
(704) 525-3953 fax

Field Report

Date	Job No.
June 27, 2011	13556-07-017-05

Project/Location
PHR Ash LF Closure Cover System Retrofit

Contractor	Weather/Temp
Earnhardt/Sides	Sunny/68-91°

Present at Site
Bobby Lynn - Fred Brown
Kyle Baucom

Time	Mileage
11.5	40.0

To: File

Services Performed

- ☐ Concrete Testing
- ☐ Cylinder Pickup
- ☐ Asphalt Testing
- ☐ Steel Testing
- ☐ Asphalt Coring
- ☐ Concrete Coring
- ☐ Undercut Evaluation
- ☐ Foundation Evaluation
- ☐ Proofrolling
- ☐ In-Place Density
- ☐ Other (Explain)

Observations/Remarks:

Onsite @ 7am. Contractor uncovered the double 24 inch down-drain just upstream of DI-7. Exposed the zip tied bands on each pipe, shoveled underneath to remove soil. Concrete sealant was then wrapped around the outer edges of each band, and pressed into place. This area was backfilled, soil tamped underneath pipes, and slope tracked in w/a skid steer. Start Type 1 repair about 50ft. before station 0+00. Excavate down and locate inside edge of the anchor trench, exposing composite lining system. Geocomposite being cut 12 inches into the anchor trench, and the 40mil liner is being cut at the inside edge of anchor trench. Cut materials being removed. Perimeter drain being installed (2'x2'). Trench being lined w/ 250EX ~10.5 oz/sy non-woven geotextile, w/a 12 inch runout being tucked on bottom, 4 to 5 inches of #57 washstone bedding placed prior to 6 inch corrugated perforated HDPE drain pipe placement. Remaining #57 washstone backfill to subgrade, then geotextile folded over and 12 inch runout on top of the geocomposite. Contractor backfilling w/ soil above perimeter drain, grading channel C1 to a approximately 3:1. 200 ft. of PD completed today. Fertiziler (19-19-19) ~ and tall fescue put out. 110 ft. of C350 installed. Sides seeded between DI's 1-3 and above DI-7.

On-Site Representative/Company

Jimmy Addison
S&ME Personnel

Disclaimer: The presence of S&ME at the project site shall not be construed as an acceptance or approval of activities at the site. S&ME is at the project site to perform specific services and has certain responsibilities which are limited to those specifically authorized in our agreement with our client. In no event shall S&ME be responsible for the safety or the means and methods of other parties at the project site. **The information presented in this field report has not been reviewed by an engineer and is to be considered preliminary.**

S&ME Form FR1F02

9751 Southern Pine Blvd
Charlotte, NC 28273
(704) 523-4726
(704) 525-3953

Field Report

Date	Job No.
06/27/2011	1356-07-017-05

Project/Location
Pine Hall Road LF Cover System Retrofit

Contractor	Weather/Temp
Earnhardt Grading, Inc.	Sunny, 90s

Present at Site
Kyle Baucom, Jimmy Addis, S&ME, Inc.; Bob Lynn, EGI

Time	Mileage
11:15 to 3:30	230 mi.

Services Performed

- ☐ Concrete Testing
- ☐ Cylinder Pickup
- ☐ Asphalt Testing
- ☐ Steel Testing
- ☐ Asphalt Coring
- ☐ Concrete Coring
- ☐ Undercut Evaluation
- ☐ Foundation Evaluation
- ☐ Proofrolling
- ☐ In-Place Density

Other (Explain)
Construction oversight

Observations/Remarks:

Arrived on site at 11:15 and signed in at the lobby. Upon arrival, EGI had excavated around drop inlet 7 area and had wrapped pipe couplings on both pipe. Sides had seeded the area around down drain replacement. EGI was in process of excavating to being Type 1 repair on the north west perimeter. Typically excavating 24 to 30 inches deep and 18 to 30 inches wide in perimeter drain. Geomembrane was cut at upper corner of key trench. Geocomposite was extended approximately 12 inches into perimeter drain. Non woven geotextile roll width was rolled out in perimeter drain. EGI placed approximately 4 to 5 inches of #57 stone in bottom of perimeter drain, rolled out corrugated, perforated single wall HDPE pipe, and covered pipe with #57 stone. Geotextile was runout approximately 12 inches underneath and on top of geocomposite. As perimeter drain was installed, EGI restored cover system to original grades by backfilling with soil. Bob Lynn explained that they also planned to seed and mat areas by the end of the work day. When I left site, EGI was excavating across bench B5A. Perimeter drain somewhat flattened out due to the construction at the bench location. Left site and signed out at lobby at approximately 3:30.

END OF REPORT

File 1356-07-017-05
On-Site Representative/Company

Kyle Baucom
S&ME Personnel

S&ME
9751 Southern Pine Blvd
Charlotte, NC 28273
(704) 523-4726
(704) 525-3953 fax

Field Report

Date	Job No.
June 28, 2011	1356-07-017-05

Project/Location: PHRAsh LF Closure Cover System Retrofit

To: File

Services Performed

- ☐ Concrete Testing
- ☐ Cylinder Pickup
- ☐ Asphalt Testing
- ☐ Steel Testing
- ☐ Asphalt Coring
- ☐ Concrete Coring
- ☐ Undercut Evaluation
- ☐ Foundation Evaluation
- ☐ Proofrolling
- ☐ In-Place Density
- ☐ Other (Explain)

Contractor	Weather/Temp
Earnhardt	Sunny-Hot/71-91°

Present at Site: Bobby Lynn

Time	Mileage
11.5	40.0

Observations/Remarks:

Onsite @ 7am. Two inches of rainfall recorded onsite last evening. Repairs had to be made to perimeter channel leading to C3 first thing this morning, washed out from rain event. Observe contractor as they resume perimeter drain construction. Start excavation today @ approximately station 1+50. Geocomposite and geomembrane cut and removed per plan. Install 250EX non-woven geotextile 6 inch dia. corrugated perforated HDPE drain pipe, and #57 washstone. Geotextile tucked under the geomembrane, and top of geotextile wrapping perimeter drain placed on top of the geocomposite. 270ft. of perimeter drain installed today, down to station 4+20. Perimeter drain backfilled w/ soil and dressed up. ~~[illegible]~~ Disturbed area seeded, matting installed C350 in channel, DS-75 on slope. Left site @ 6:10pm.

* PD trench getting a little deeper (6 to 12 inches) than plan, but geosynthetics have to be removed. Trench further up slope, not consistently 9ft. off ℄ of channel. Possibility of over run on #57 washstone.

On-Site Representative/Company

Jimmy Adding
S&ME Personnel

Disclaimer: The presence of S&ME at the project site shall not be construed as an acceptance or approval of activities at the site. S&ME is at the project site to perform specific services and has certain responsibilities which are limited to those specifically authorized in our agreement with our client. In no event shall S&ME be responsible for the safety or the means and methods of other parties at the project site. **The information presented in this field report has not been reviewed by an engineer and is to be considered preliminary.**

S&ME Form FRIEF02

S&ME
9751 Southern Pine Blvd
Charlotte, NC 28273
(704) 523-4726
(704) 525-3953 fax

Field Report

Date	Job No.
June 29, 2011	13560-07-017-05

Project/Location
PHR Ash LF Closure Cover System Retrofit

Contractor	Weather/Temp
Earnhardt	Sunny / 68-89°

Present at Site
Bobby Lynn - Fred Brown
Kim Benson - David Grogg
Kyle Baucom

Time	Mileage
11.5	40.0

To: File

Services Performed

- ☐ Concrete Testing
- ☐ Cylinder Pickup
- ☐ Asphalt Testing
- ☐ Steel Testing
- ☐ Asphalt Coring
- ☐ Concrete Coring
- ☐ Undercut Evaluation
- ☐ Foundation Evaluation
- ☐ Proofrolling
- ☐ In-Place Density
- ☐ Other (Explain)

Observations/Remarks:

Onsite @ 7:15am. One and a half inches of rainfall recorded onsite last night. Observed contractor as they worked on the perimeter drain. Today excavation started @ station 4+20, down to PD-2 intersection, terminate 6 inch perforated drain pipe for now. Contractor skipped over 10ft. and resumed PD excavation to station 8+35. A total of 405ft. of PD installed today. Anchor trench continues to be more than 9ft. off ℄ of channel C1, just starting to get into channel C2. Area disturbed today was fertilized/seed and matted w/ C350 & D575. Set in on weekly construction meeting. Left site @ 6:15.

On-Site Representative/Company

Jimmy Adolio
S&ME Personnel

Disclaimer: The presence of S&ME at the project site shall not be construed as an acceptance or approval of activities at the site. S&ME is at the project site to perform specific services and has certain responsibilities which are limited to those specifically authorized in our agreement with our client. In no event shall S&ME be responsible for the safety or the means and methods of other parties at the project site. **The information presented in this field report has not been reviewed by an engineer and is to be considered preliminary.**

S&ME
9751 Southern Pine Blvd
Charlotte, NC 28273
(704) 523-4726
(704) 525-3953 fax

Field Report

Date	Job No.
June 30, 2011	1356-07-017-05

Project/Location
PHR Ash LF Closure Cover System Retrofit

Contractor	Weather/Temp
Earnhardt	Sunny / 67-87°

Present at Site
Bobby Lynn

Time	Mileage
11.5	40.0

To: File

Services Performed

- ☐ Concrete Testing
- ☐ Cylinder Pickup
- ☐ Asphalt Testing
- ☐ Steel Testing
- ☐ Asphalt Coring
- ☐ Concrete Coring
- ☐ Undercut Evaluation
- ☐ Foundation Evaluation
- ☐ Proofrolling
- ☐ In-Place Density
- ☐ Other (Explain)

Observations/Remarks:

Onsite @ 7am. Contractor filled in reel, and reseeded, on slope between DI's 2 & 3, did not mulch, has no straw onsite. No protection placed around drop inlets 1, 2, 3 & 7 as of yet. Installed four wattles at 50ft. interval in channel C1, @ perimeter drain (PD) starting location. Resume PD excavation @ station 8+35 approximately. Trench 3ft. deep towards end of channel C2. Total of 269' ft. of PD installed today. I have a total of 1144ft. "NW & N sides". Soil backfill complete w/ materials excavated. Today's disturbed area seeded and matted w/ D575.

On-Site Representative/Company

Jimmy A Johns
S&ME Personnel

Disclaimer: The presence of S&ME at the project site shall not be construed as an acceptance or approval of activities at the site. S&ME is at the project site to perform specific services and has certain responsibilities which are limited to those specifically authorized in our agreement with our client. In no event shall S&ME be responsible for the safety or the means and methods of other parties at the project site. **The information presented in this field report has not been reviewed by an engineer and is to be considered preliminary.**

S&ME Form FRIF03

S&ME
9751 Southern Pine Blvd
Charlotte, NC 28273
(704) 523-4726
(704) 525-3953 fax

Field Report

Date	Job No.
July 1, 2011	1356-07-017-05

Project/Location
PHR Ash LF Closure Cover System Retrofit

Contractor	Weather/Temp
Earnhardt	Sunny/70-90°

Present at Site
Bobby Lynn

Time	Mileage
11.0	115.0

To: File

Services Performed

- ☐ Concrete Testing
- ☐ Cylinder Pickup
- ☐ Asphalt Testing
- ☐ Steel Testing
- ☐ Asphalt Coring
- ☐ Concrete Coring
- ☐ Undercut Evaluation
- ☐ Foundation Evaluation
- ☐ Proofrolling
- ☐ In-Place Density
- ☐ Other (Explain)

Observations/Remarks:

Onsite @7am. Observe contractor as they fill in gap adjacent to soil/cement perimeter road in channel C1, w/ C350 matting. Wattles installed in channel C1 (every 50ft.), did not complete ran out of. Got go ahead to place protection around drop inlets 2 & 3. Wattles placed around concrete apron (C shape) on slope side. ~~Contractor~~ Contractor did clean up around site. Left site @3:30.

On-Site Representative/Company

Jimmy Addis
S&ME Personnel

Disclaimer: The presence of S&ME at the project site shall not be construed as an acceptance or approval of activities at the site. S&ME is at the project site to perform specific services and has certain responsibilities which are limited to those specifically authorized in our agreement with our client. In no event shall S&ME be responsible for the safety or the means and methods of other parties at the project site. **The information presented in this field report has not been reviewed by an engineer and is to be considered preliminary.**

S&ME Form FRI503

S&ME
9751 Southern Pine Blvd
Charlotte, NC 28273
(704) 523-4726
(704) 525-3953 fax

Field Report

Date: July 5, 2011	Job No.: 1356-07-017-05
Project/Location: PHR Ash LF Closure Cover System Retrofit	
Contractor: Earnhardt	Weather/Temp: PC / 68-89°
Present at Site: Bobby Lynn, David Grogg	
Time: 10.5	Mileage: 40.0

To: File

Services Performed

- ☐ Concrete Testing
- ☐ Cylinder Pickup
- ☐ Asphalt Testing
- ☐ Steel Testing
- ☐ Asphalt Coring
- ☐ Concrete Coring
- ☐ Undercut Evaluation
- ☐ Foundation Evaluation
- ☐ Proofrolling
- ☐ In-Place Density
- ☐ Other (Explain)

Observations/Remarks:

Onsite @ 7am. Yesterday's rain event produced 1.75 inches onsite. Observe EGI as they excavated across the perimeter road to junction box for PD-2. Solid wall 6 inch pipe placed to JB, and backfilled w/ soil up to minus 9 inches. A mirafi 600X or equivalent and ABC put down for road surfacing. A T w/ end cap connected on channel C1 side. Matting completed on channel C1. Rip-rap apron built for PD-2. Start Type 1 repair on East side afterlunch, at station 0+00 (elev. 805.70). Excavation revealed a step at top of anchor trench.

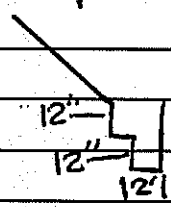

EGI installed 127ft. of perimeter drain this afternoon. Backfilled and channel C3 from 0+00 to 1+27 reshaped. EGI is out of DS75 matting. Left site @ 5:15pm.

On-Site Representative/Company

Jimmy Addison
S&ME Personnel

Disclaimer: The presence of S&ME at the project site shall not be construed as an acceptance or approval of activities at the site. S&ME is at the project site to perform specific services and has certain responsibilities which are limited to those specifically authorized in our agreement with our client. In no event shall S&ME be responsible for the safety or the means and methods of other parties at the project site. **The information presented in this field report has not been reviewed by an engineer and is to be considered preliminary.**

S&ME Form FRLF03

S&ME
9751 Southern Pine Blvd
Charlotte, NC 28273
(704) 523-4726
(704) 525-3953 fax

Field Report

Date	Job No.
July 6, 2011	1356-07-017-05

Project/Location: PHR Ash LF Closure-Cover System Retrofit

Contractor	Weather/Temp
Earnhardt	PC/71-90°

Present at Site: Bobby Lynn-Jamie Lineberger, Kim Benson-David Gregg, Ken Daly-Kyle Bancom

Time	Mileage
10.5	40.0

To: File

Services Performed

- ☐ Concrete Testing
- ☐ Cylinder Pickup
- ☐ Asphalt Testing
- ☐ Steel Testing
- ☐ Asphalt Coring
- ☐ Concrete Coring
- ☐ Undercut Evaluation
- ☐ Foundation Evaluation
- ☐ Proofrolling
- ☐ In-Place Density
- ☐ Other (Explain)

Observations/Remarks:

Onsite @7am. Kim & David out at site first thing this morning to check on progress. Some erosion at DI-1, needs to be address. EGI excavate for perimeter drain (PD) on East side (C3) start @ approximately station 1+27 and stop @ sta. 1+93 ~ 66ft. installed. The step down observed at inside of anchor trench during 7-5-11 excavation, has gone away, but trench has increased in depth ~ 3ft. now. I request to EGI to hold #57 washstone to 2ft. total depth during PD installation. This afternoon EGI moved PD const. to the NE corner, approximately sta. 9+33, and start excavation. EGI able to cross over top of dbl. 18" drain lines out of JB-1. Excavation of PD to near type 2 repair area ~ station 6+87 ~ a total of 246ft. of PD installed (C3). PD const. continues to be acceptable w/ geocomposite and liner cut & removed perplan, then trench lined w/ a 10oz/sy non-woven geotextile tucked under the 40mil (bottom), 3 to 4 inches of #57 stone bed, 6 inch perforated drain pipe rolled in, and #57 stone backfill to a minimum of 2ft., all wrapped by geotextile w/ top piece on geocomposite. Both areas backfilled and channel reshaped. Set in on meeting 1-2:20. Started raining around 5:15, left site.

On-Site Representative/Company

Jimmy Adkins
S&ME Personnel

Disclaimer: The presence of S&ME at the project site shall not be construed as an acceptance or approval of activities at the site. S&ME is at the project site to perform specific services and has certain responsibilities which are limited to those specifically authorized in our agreement with our client. In no event shall S&ME be responsible for the safety or the means and methods of other parties at the project site. **The information presented in this field report has not been reviewed by an engineer and is to be considered preliminary.**

S&ME Form FRLF03

S&ME

JOB NO. 1356-07-017
SHEET NO. 1/2
DATE 7/6/11

JOB NAME PINE HALL ROAD RETROFIT
COMPUTED BY KRD
SUBJECT SITE VISIT
CHECKED BY —

△ 12:05 CALL D. GROGG & REQUEST STATION SIGN-IN PRIOR TO PHR VISIT. WITH KYLE BAUCOM TODAY

△ 12:10 ARRIVE @ PHR; MEET BOBBY LYNN → EGI. EGI IS CURRENTLY ON BREAK. REVIEW SITE FROM CHANNEL C1, C2 TO NORTH CORNER. NOTE THAT WE WANT TO CONFIRM E-M STAPLE PATTERN IS CONSISTENT WITH

△ 12:30 OBSERVE @ NE CORNER THE ~~PAST~~ PERIMETER DRAIN TYPE 1 NORTH OF JUNCTION BOX. WITHIN THE VERTICAL SIDE OF THE KEY TRENCH, OBSERVED LINEAR VOID SPACE ALONG THE SIDE FILLED IN WITH ASH AND SOIL. OBSERVATIONS INDICATE THE ASH & SOIL WAS DEPOSITED AFTER CONSTRUCTION. WE TOOK VARIOUS PHOTOS. OBSERVATIONS FROM APPROX. STATION 9+33 AND CHANNEL C2 11+40.

△ 12:50 → PHR PROGRESS MEETING, DISCUSSIONS W/ T. LEAD & K. BENSON → 14:44

△ 14:45 TRAVEL/RETURN TO PHR – REVIEW CHANNEL C2 WITH D. GROGG, K. BENSON, B. LYNN, J. LINEBERGER, K. BAUCOM & K. DALY. THE GROUP DISCUSSED AND EGI AGREED TO REMOVE EXISTING MATTING & WATTLES, PLACE SOIL TO ACHIEVE/RESTORE GRADE, THEN PLACE C350 MATTING PER THE PLANS. D. GROGG & K. BENSON DEPART △ 15:15. WE PROCEED TO PERIMETER DRAIN INSTALLATION IN PROGRESS, SOUTH OF BOIL #1 LOCATION. DRAIN WAS ALREADY INSTALLED PAST BOIL #1. CURRENTLY TYPE 1 DRAIN IS BEING INSTALLED. WE OBSERVE ASH-FILLED VOIDS BEHIND THE KEY TRENCH GEOMEMBRANE ON THE VERTICAL SIDE.

△ 16:00 DEPART SITE – D. GROGG TO SIGN US OUT AT LOBBY.

NOTE → OBSERVATIONS OF CONDITIONS ALONG KEY TRENCH SIDE WALL INDICATE ASH WAS TRANSPORTED & DEPOSITED ALONG VOID SPACES AFTER CONSTRUCTION

OVER →

S&ME

JOB NO. 1356-07-017
SHEET NO. 2/2
DATE 7/6/11

JOB NAME PHR - RETROFIT
COMPUTED BY VAD
SUBJECT SITE VISIT
CHECKED BY

OBSERVATIONS TODAY AS SKETCHED ABOVE WERE AT APPROXIMATE STATION 8+60 TO 8+50.

VAD

S&ME
9751 Southern Pine Blvd
Charlotte, NC 28273
(704) 523-4726
(704) 525-3953 fax

Field Report

Date	Job No.
July 7, 2011	1356-07-017-05

Project/Location: PHR Ash LF Closure - Cover System Retrofit

Contractor	Weather/Temp
Earnhardt	PC to Sunny / 71-89°

Present at Site: Bobby Lynn

To: File

Services Performed

- ☐ Concrete Testing
- ☐ Cylinder Pickup
- ☐ Asphalt Testing
- ☐ Steel Testing
- ☐ Asphalt Coring
- ☐ Concrete Coring
- ☐ Undercut Evaluation
- ☐ Foundation Evaluation
- ☐ Proofrolling
- ☐ In-Place Density
- ☐ Other (Explain)

Time	Mileage
11.0	40.0

Observations/Remarks:

Onsite @ 7:15. Observe contractor as they regrade channel C6. Had to haul more soil into, used perimeter drain excavated soils. Channel C6 fertilized and seeded again (2nd time). Matted C6 w/ correct matting (C350) this time. Followed manufacturers staple pattern rows of 5 staples 1ft. apart across matting, w/ 2ft. of spacing between rows. Kyle Baucon recommended doubling up staples (2 rows) at each end of roll overlap, and staple every ft. along roll edges. Informed contractor of staple pattern. Three silt fence outlets installed today ~ East side stockpile area and PD-1 & 2 outlets. Excavate across perimeter soil/cement road for PD-1 discharge. Connect 6 inch drain lines (C2 & C3) w/ a double T coupling >.tt.< at the NE corner. Lay 6 inch double line to proposed JB-PD-1 location ~ w/ 1% fall, solid wall pipe penetrates geotextile surrounding perimeter drain. Trench backfilled, top 9 inches was ABC on top woven geotextile. Left site @ 5:30.

On-Site Representative/Company

Jimmy Atkins
S&ME Personnel

Disclaimer: The presence of S&ME at the project site shall not be construed as an acceptance or approval of activities at the site. S&ME is at the project site to perform specific services and has certain responsibilities which are limited to those specifically authorized in our agreement with our client. In no event shall S&ME be responsible for the safety or the means and methods of other parties at the project site. **The information presented in this field report has not been reviewed by an engineer and is to be considered preliminary.**

S&ME Form FRLF03

S&ME
9751 Southern Pine Blvd
Charlotte, NC 28273
(704) 523-4726
(704) 525-3953 fax

Field Report

Date	Job No.
July 8, 2011	1356-07-017-05

Project/Location: PHRAsh LF Closure-Cover System Retrofit

Contractor	Weather/Temp
Earnhardt	Cloudy / 71°-90°

Present at Site: Bobby Lynn

Time	Mileage
11.0	115.0

To: File

Services Performed

- ☐ Concrete Testing
- ☐ Cylinder Pickup
- ☐ Asphalt Testing
- ☐ Steel Testing
- ☐ Asphalt Coring
- ☐ Concrete Coring
- ☐ Undercut Evaluation
- ☐ Foundation Evaluation
- ☐ Proofrolling
- ☐ In-Place Density
- ☐ Other (Explain)

Observations/Remarks:

Onsite @ 7:15am. Observe contractor as they install erosion control mat (DS-75) in channel C3, station 0+00-1+90 and station 6+87-9+33, recommend staple pattern D. Had contractor add more staples to the C350 matting in channels C1 & C6. Laid 8 inch solid wall drain pipe out of proposed JB for PD-1 ~100ft, down to rip-rap apron. This area was backfilled, probed sufficient. Rebuilt rip-rap pad @ channel intersection of C2/C3, new geotextile put in, reused existing rip-rap. Six wattles put in channel C6 ~1st one 25ft. off end of rip-rap lining, the remainder @ every 50ft. interval. One roll of 40mil LDPE delivered to site ~ roll #318331-11 710'x23'. Leave site @ 3:15pm. Go to office complete paperwork.

On-Site Representative/Company

Jimmy Addison
S&ME Personnel

Disclaimer: The presence of S&ME at the project site shall not be construed as an acceptance or approval of activities at the site. S&ME is at the project site to perform specific services and has certain responsibilities which are limited to those specifically authorized in our agreement with our client. In no event shall S&ME be responsible for the safety or the means and methods of other parties at the project site. **The information presented in this field report has not been reviewed by an engineer and is to be considered preliminary.**

S&ME Form FRIF03

S&ME
9751 Southern Pine Blvd
Charlotte, NC 28273
(704) 523-4726
(704) 525-3953 fax

Field Report

Date: July 11, 2011	Job No.: 13560-07-017-05
Project/Location: PHRAsh LF Closure-Cover System Retrofit	
Contractor: Earnhardt	Weather/Temp: Sunny/75-93°
Present at Site: Bobby Lynn, Kyle Baucom	
Time: 12.0	Mileage: 40.0

To: File

Services Performed

- ☐ Concrete Testing
- ☐ Cylinder Pickup
- ☐ Asphalt Testing
- ☐ Steel Testing
- ☐ Asphalt Coring
- ☐ Concrete Coring
- ☐ Undercut Evaluation
- ☐ Foundation Evaluation
- ☐ Proofrolling
- ☐ In-Place Density
- ☐ Other (Explain)

Observations/Remarks:

Onsite @ 7:00am. Observe contractor as they start removing the closure system at approximately station 2+00 ~ type 2 area. Working to the North w/a Volvo EC240 long reach trackhoe, and one CAT 730 offroad truck. Soils being placed in adjacent stockpile area. Noticed change in subgrade w/in the first 15ft. shear developed above anchor trench, by station 2+30 anchor trench gone ~ washed out, 3 to 4 ft. tall shear wall formed. After lunch geocomposite & liner cut & removed (sta. 2+00-3+50). This revealed the flow path of water along the anchor trench. By the end of the day, approximately 330ft. had been exposed along type 2 area. Had two meandering areas up into landfill. Part of the bench area away from anchor trench, held up o.k.. Majority of area where anchor trench was washed out, just created a shear wall 3 to 6 ft. in height. Some area exhibit sloughing. Kyle did a sketch, and shot video. Contractor also working on top of landfill revisiing channel grades in B2. Utilizing a D5 dozer and one off-road truck, hauling out of borrow area. Soils rocky, advised operator to push out bigger ones to the sides for removal.

On-Site Representative/Company

Jimmy Atkins
S&ME Personnel

Disclaimer: The presence of S&ME at the project site shall not be construed as an acceptance or approval of activities at the site. S&ME is at the project site to perform specific services and has certain responsibilities which are limited to those specifically authorized in our agreement with our client. In no event shall S&ME be responsible for the safety or the means and methods of other parties at the project site. **The information presented in this field report has not been reviewed by an engineer and is to be considered preliminary.**

S&ME Form FRLF03

S&ME

JOB NO. 1356-07-017-05
SHEET NO. 1/2
DATE 7/11/11

JOB NAME PHR Retrofit
COMPUTED BY KB
SUBJECT Type 2 Perimeter Drain Repair
CHECKED BY

- arrived on site @ 12:00 ; EGI at lunch
- lunch from 12:00 to 12:45
- EGI had removed protective cover from NE perimeter approx. 1+90 to ~~3+70~~ 3+70 ; just short of extents in bench B5B ; had not yet removed geosynthetics in all areas ; had cut holes where there were significant wash outs
- appeared that material had transported behind trench in first 50-60'
- two significant wash outs in btwn 2+50 to 3+25 where trench veers to right
  - ↳ appeared to be 8-10' from liner limits
- from 4+00 down it appears that material was transported behind trench
- after lunch, EGI removed geosynthetics
- see attached sketch for areas of erosion + sloughing of material
- ash did not appear to be wet or soft
- EGI continued protective cover removal from approx Station 4+00 to 5+00 ~~that~~ during afternoon

NTS

S&ME

JOB NO. 136-07-017-05

SHEET NO. 2/2

DATE 7/11/11

JOB NAME PHR Retrofit

COMPUTED BY KB

SUBJECT Type 2 Perimeter Drain Repair

CHECKED BY

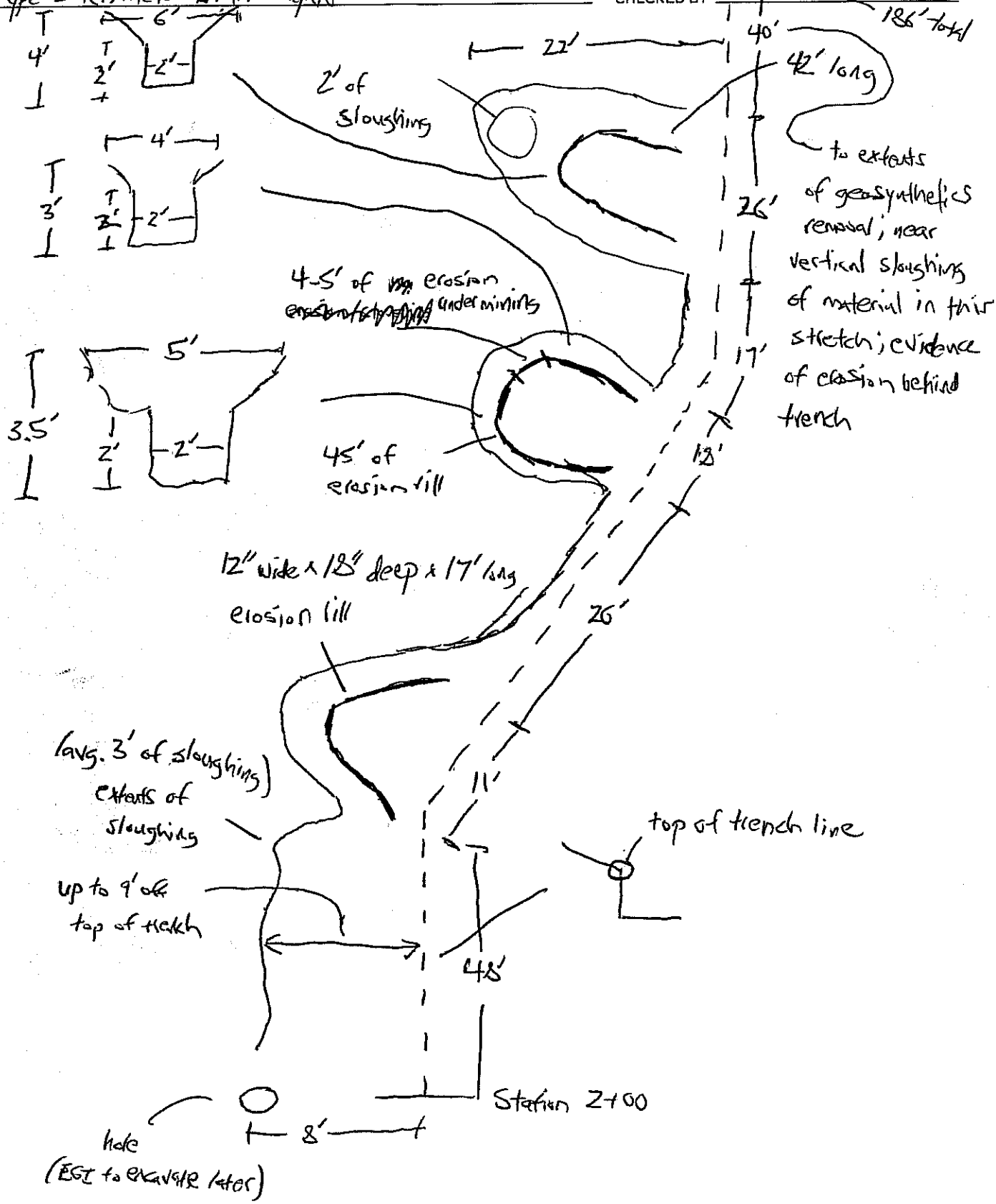

S&ME
9751 Southern Pine Blvd
Charlotte, NC 28273
(704) 523-4726
(704) 525-3953 fax

Field Report

Date	Job No.
July 12, 2011	13556-07-017-05

Project/Location: PHR Ash LF Closure - Cover System Retrofit

Contractor	Weather/Temp
Earnhardt	Sunny-Hot/71-95°

Present at Site: Bobby Lynn
Kyle B. - Ken D. - Jack A. - Howard P.
Kim B. - David G.

Time	Mileage
11.5	40.0

To: File

Services Performed

- ☐ Concrete Testing
- ☐ Cylinder Pickup
- ☐ Asphalt Testing
- ☐ Steel Testing
- ☐ Asphalt Coring
- ☐ Concrete Coring
- ☐ Undercut Evaluation
- ☐ Foundation Evaluation
- ☐ Proofrolling
- ☑ In-Place Density
- ☐ Other (Explain)

Observations/Remarks:

Onsite @ 6:45 am. Observe contractor as they excavate compacted soil cover, start @ station 5+30 approximately, and progressed to the North. Geocomposite and geomembrane cut and removed behind excavation. Still observing material loss along the toe, which created a shear wall of flyash. Anchor trench washed away also. This type 2 disturbance continued down to approximately station 7+06, or where type 1 repair stopped on 7-6-11 ~ note: off on station +/- 19ft.. Contractor started rebuilding the subgrade, took D5 dozer and laid back disturbed area as best possible w/out collapsing areas where positive slope at the geosynthetics exists and subgrade support is adequate. Compacted soil cover reused to build back closure system subgrade. Monitored fill placement, D5 dozer tracked in 8 to 12 inch lifts, also recommend compactive effort w/a loaded 730 offroad truck. Five fdt's performed, all test meet compaction requirements. Inform contractor of test results. Contractor completed subgrade today. No smoothdrum onsite, contractor used skid-steer to smooth out subgrade. Left site @ 6:15 pm.

On-Site Representative/Company

Jimmy Adkins
S&ME Personnel

Disclaimer: The presence of S&ME at the project site shall not be construed as an acceptance or approval of activities at the site. S&ME is at the project site to perform specific services and has certain responsibilities which are limited to those specifically authorized in our agreement with our client. In no event shall S&ME be responsible for the safety or the means and methods of other parties at the project site. **The information presented in this field report has not been reviewed by an engineer and is to be considered preliminary.**

S&ME Form FRLF03

S&ME

JOB NO. 1356-07-017-05
SHEET NO. 1/2
DATE 7/12/11

JOB NAME PHR Retrofit
COMPUTED BY KB
SUBJECT Type 2 Perimeter Drain Repair
CHECKED BY

- arrived on site @ 7:00 AM; signed in on EGI sign-in sheet
- EGI began grading ash subgrade @ 7:15 AM; pushed ash w/ D5 dozer; filled in rilled areas; cut out sloughed areas; compacted ash to 3:1 slope tracking perpendicular to slope
- EGI began restoring subgrade @ 7:45 AM; using excavated protective cover to restore subgrade; compacted soil material in a similar fashion; made sure to remove debris (panel drain materials
- EGI was also excavating protective cover at lower limits (approx. 5+30 down); have not yet removed geosynthetics but it appears that there are near vertical shear faces where material moved behind trench
- approx. 9:40 AM; route to top deck w/ KRD; ~~observed~~ met Kim B from Duke
- observed B2 repair; Kim B pointed out rocks in B2 soil repair; EGI to remove as best
- KB, KRD, & Kim B drove to DD repair area; vegetation appeared to be coming in good; no flow observed in DD or seepage diaphragm pipe
- approx. 10:15 AM; drove to look at lower limits of Type 2 repair area

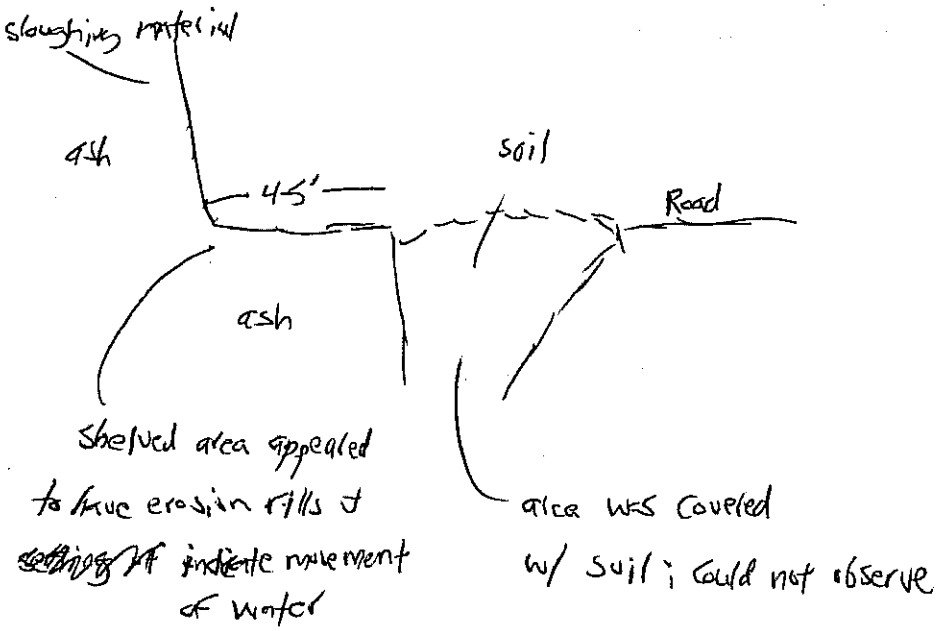

S&ME

JOB NO. 1356-07-017-05

SHEET NO. 2/2

DATE 7/12/11

JOB NAME PHR Retrofit

COMPUTED BY KB

SUBJECT Type 2 Perimeter Drain Repair

CHECKED BY

- approx. 10:45 AM; observed EGI compact soil to restore subgrade; tracking + compacting in 6-inch thick lifts w/ Cat D5 dozer; following this, EGI loaded Cat 730 truck and compacted
- approx. 11:30 A.M left site to go to lunch; came back from lunch at 12:45 PM
- approx. 12:45 - 1:45 observed EGI restoring subrage
- Construction meeting from 2:00 to 2:45 P.M.
- met JH on-site to unload tensiometer + give him liner QQA forms
- left site @ 3:30 PM

S&ME
9751 Southern Pine Blvd
Charlotte, NC 28273
(704) 523-4726
(704) 525-3953 fax

Field Report

Date	Job No.
July 13, 2011	1356-07-017-05

Project/Location: PHR Ash LF Closure - Cover System Retrofit

To: File

Services Performed

- ☐ Concrete Testing
- ☐ Cylinder Pickup
- ☐ Asphalt Testing
- ☐ Steel Testing
- ☐ Asphalt Coring
- ☐ Concrete Coring
- ☐ Undercut Evaluation
- ☐ Foundation Evaluation
- ☐ Proofrolling
- ☐ In-Place Density
- ☑ Other (Explain): Geosynthetics

Contractor	Weather/Temp
EGI / PFF	Sunny-Hot/72-94°

Present at Site: Bobby Lynn, Al Corbitt, David Gragg

Time	Mileage
10.5	40.0

Observations/Remarks:

Onsite @ 7:15am. EGI cleaned up the piles of old closure materials, hauled to dumpster. Resume work in channel C7, haul soils out of barrow area to restore design grades. PFF got their safety orientation and got back to site @ 10:30. Unloaded trailer and prepare for deployment. After lunch PFF deploy panels 1 to 3, parallel w/ the perimeter drain. Two field seams made P1/P3 and P1/P2 by hot wedge. No air test today, a thunder storm moved over jobsite. Geomembrane safed up, new tucked under existing and sand bagged, leading edge sand bagged also. PFF left site @ 3:30. EGI complete grading of channel C7. Channel C7 fertilized and seeded, DS-75 matting installed 18 rolls and 19 wattles put in.

*Surveyors onsite took subgrade shots on type 2 area.

Deliveries today: 4 rolls of geocomposite 330-2-8 roll #'s
- Drop inlets PD-1 & PD-2

00430510100001
10002
10003
10004

Left site @ 5:30.

Jimmy Adkins

On-Site Representative/Company | **S&ME Personnel**

Disclaimer: The presence of S&ME at the project site shall not be construed as an acceptance or approval of activities at the site. S&ME is at the project site to perform specific services and has certain responsibilities which are limited to those specifically authorized in our agreement with our client. In no event shall S&ME be responsible for the safety or the means and methods of other parties at the project site. **The information presented in this field report has not been reviewed by an engineer and is to be considered preliminary.**

S&ME Form FRLF03

S&ME
9751 Southern Pine Blvd
Charlotte, NC 28273
(704) 523-4726
(704) 525-3953 fax

Field Report

Date	Job No.
July 14, 2011	13560-07-017-05

Project/Location: PHR Ash LF Closure - Cover System Retrofit

Contractor	Weather/Temp
EGI/PFF	Sunny / 70-86°

Present at Site: Bobby Lynn, Al Corbitt

Time	Mileage
11.0	40.0

To: File

Services Performed

- ☐ Concrete Testing
- ☐ Cylinder Pickup
- ☐ Asphalt Testing
- ☐ Steel Testing
- ☐ Asphalt Coring
- ☐ Concrete Coring
- ☐ Undercut Evaluation
- ☐ Foundation Evaluation
- ☐ Proofrolling
- ☐ In-Place Density
- ☑ Other (Explain): Geosynthetics

Observations/Remarks:

Onsite @ 7am. Observed PFF as they cleaned and prepped the geomembrane tie-in. Tie-in weld made today ~ double hot wedge fusion, from North to South, an extrusion weld was method used on North end of panel 2 to existing, and part of panel 1 (6ft.) on South end for tie-in to existing. Total tie-in weld = 538ft ~ DblHW and 14ft. ~ extrusion. I monitored air ~~test~~ and non-destructive testing as geomembrane was detailed today. Marked one Ldt on tie-in. Logged defects and N/D test results. Geomembrane install completed today. EGI as-built geomembrane.

EGI set perimeter drain junction boxes 1 and 2. They had to modify #1's outlet precast hole, not big enough to get 8" pipe in. Had to chisel to enlarge. Hauled soil to channel B2. Grouted up junction boxes pipe penetration and backfilled around. Left site @ 5:30.

On-Site Representative/Company

Jimmy Addis
S&ME Personnel

Disclaimer: The presence of S&ME at the project site shall not be construed as an acceptance or approval of activities at the site. S&ME is at the project site to perform specific services and has certain responsibilities which are limited to those specifically authorized in our agreement with our client. In no event shall S&ME be responsible for the safety or the means and methods of other parties at the project site. **The information presented in this field report has not been reviewed by an engineer and is to be considered preliminary.**

S&ME Form FRLF03

S&ME
9751 Southern Pine Blvd
Charlotte, NC 28273
(704) 523-4726
(704) 525-3953 fax

Field Report

Date	Job No.
July 15, 2011	1356-07-017-05

Project/Location: PHR Ash LF Closure-Cover System Retrofit

To: File

Services Performed

- ☐ Concrete Testing
- ☐ Cylinder Pickup
- ☐ Asphalt Testing
- ☐ Steel Testing
- ☐ Asphalt Coring
- ☐ Concrete Coring
- ☐ Undercut Evaluation
- ☐ Foundation Evaluation
- ☐ Proofrolling
- ☑ In-Place Density
- ☑ Other (Explain): Geosynthetics

Contractor	Weather/Temp
EGI/PFF	Overcast/69-80°

Present at Site: Mike Sellers, Al Corbitt

Time	Mileage
9.0	40.0

Observations/Remarks:

Onsite @7am. Observe PFF deploying TN 330-2-8 geocomposite on type 2 repair area. Inside edge of perimeter drain marked, PFF pulled panels 1ft. past mark, trench not open yet. Four rolls put down today, seams tied and flaps thermo bonded. Along tie-in, existing geocomposite was lapped over new ~18 to 24 inches and thermo bonded. Not enough geocomposite ordered, about 100ft. short. Al called his office, 1 more roll to be shipped to site in the morning. PFF left site @11am. I pulled Ldt #1, which passed spec. criteria for textured 40mil.

EGI cleaned up around site. Excavating and stockpiling soil in borrow area for use as cover. This afternoon EGI resumed excavation of the perimeter drain on North end of type 2 repair area, progressing to the South. Approximately 125ft. of PD installed today. Start placing compacted soil cover back over type 2 area ~ North end. I ran two fdt's on top of landfill n channel B2, both passed. Left site @3:30.

On-Site Representative/Company

Jimmy Adkins
S&ME Personnel

Disclaimer: The presence of S&ME at the project site shall not be construed as an acceptance or approval of activities at the site. S&ME is at the project site to perform specific services and has certain responsibilities which are limited to those specifically authorized in our agreement with our client. In no event shall S&ME be responsible for the safety or the means and methods of other parties at the project site. **The information presented in this field report has not been reviewed by an engineer and is to be considered preliminary.**

S&ME Form FRLF03

S&ME
9751 Southern Pine Blvd
Charlotte, NC 28273
(704) 523-4726
(704) 525-3953 fax

Field Report

Date	Job No.
July 16, 2011	1356-07-017-05

Project/Location
PHR Ash LF Closure-Cover System Retrofit

Contractor	Weather/Temp
PFF	Cloudy/67-

Present at Site
Al Corbitt

Time	Mileage
6.0	115.0

To: File

Services Performed

- ☐ Concrete Testing
- ☐ Cylinder Pickup
- ☐ Asphalt Testing
- ☐ Steel Testing
- ☐ Asphalt Coring
- ☐ Concrete Coring
- ☐ Undercut Evaluation
- ☐ Foundation Evaluation
- ☐ Proofrolling
- ☐ In-Place Density
- ☑ Other (Explain): Geosynthetics

Observations/Remarks:

Onsite @ 6:45 am. One roll of geocomposite TN 330-2-8 #43051010005 delivered to jobsite this morning. PFF complete install of the geocomposite, tied and thermo bonded sufficiently. PFF stockpiled left over materials and cleaned up. They mobed offsite. I completed field reports & expense report, traveled to office. Left site @ 9:45 am.

On-Site Representative/Company

Jimmy Addis
S&ME Personnel

Disclaimer: The presence of S&ME at the project site shall not be construed as an acceptance or approval of activities at the site. S&ME is at the project site to perform specific services and has certain responsibilities which are limited to those specifically authorized in our agreement with our client. In no event shall S&ME be responsible for the safety or the means and methods of other parties at the project site. **The information presented in this field report has not been reviewed by an engineer and is to be considered preliminary.**

S&ME Form FR1F03

S&ME
9751 Southern Pine Blvd
Charlotte, NC 28273
(704) 523-4726
(704) 525-3953 fax

Field Report

Date	Job No.
July 18, 2011	13546-07-017-05

Project/Location PHR Ash LF Closure - Cover System Retrofit

Contractor	Weather/Temp
EGI	Sunny / 68-90°

Present at Site Bobby Lynn

Time	Mileage
10.5	40.0

To: File

Services Performed

- ☐ Concrete Testing
- ☐ Cylinder Pickup
- ☐ Asphalt Testing
- ☐ Steel Testing
- ☐ Asphalt Coring
- ☐ Concrete Coring
- ☐ Undercut Evaluation
- ☐ Foundation Evaluation
- ☐ Proofrolling
- ☐ In-Place Density
- ☐ Other (Explain)

Observations/Remarks:

Onsite @ 7am. Observe EGI as they excavate perimeter drain (PD) thru type 2 repair area. PD installation inaccordance w/ plans and specs.. Approximately 405 ft. installed today. EGI placing compacted soil cover on type 2 area, soils coming out of borrow area. I ran two compaction test on soil cover, both test passed. EGI removed ash laden rip-rap out of apron at start of channel C7. Rip-Rap disposed of off site. Sides seeding onsite, sowed and installed matting in channel B2, and revised grading area. Excel R1 installed instead of DS-75.
* PD is finished.

On-Site Representative/Company

Jimmy Addo
S&ME Personnel

Disclaimer: The presence of S&ME at the project site shall not be construed as an acceptance or approval of activities at the site. S&ME is at the project site to perform specific services and has certain responsibilities which are limited to those specifically authorized in our agreement with our client. In no event shall S&ME be responsible for the safety or the means and methods of other parties at the project site. **The information presented in this field report has not been reviewed by an engineer and is to be considered preliminary.**

S&ME
9751 Southern Pine Blvd
Charlotte, NC 28273
(704) 523-4726
(704) 525-3953 fax

Field Report

Date: July 19, 2011	Job No.: 1356-07-017-05
Project/Location: PHR Ash LF Closure - Cover System Retrofit	
Contractor: EGI	Weather/Temp: PC/70-94°
Present at Site: Bobby Lynn, David Gregg	
Time: 10.0	Mileage: 40.0

To: File

Services Performed

- ☐ Concrete Testing
- ☐ Cylinder Pickup
- ☐ Asphalt Testing
- ☐ Steel Testing
- ☐ Asphalt Coring
- ☐ Concrete Coring
- ☐ Undercut Evaluation
- ☐ Foundation Evaluation
- ☐ Proofrolling
- ☐ In-Place Density
- ☐ Other (Explain)

Observations/Remarks:

Onsite @ 7am. Observe EGI as they completed the compacted soil cover on type 2 area. Fine graded the soil cover and recut channel C3, this afternoon. EGI started matting channel C3 from the northern end of type 2 area, DS-75 installed, and stapled per manufacturer's recommendations. Borrow area dressed up, needs a little more work tho. Start reviewing closeout checklist w/ David G.. Sides back onsite, cleaned up top n channel B2 (removed big rocks). Thunderstorm hit site @ 4:30, left for the day.

On-Site Representative/Company

Jimmy A Johnson
S&ME Personnel

Disclaimer: The presence of S&ME at the project site shall not be construed as an acceptance or approval of activities at the site. S&ME is at the project site to perform specific services and has certain responsibilities which are limited to those specifically authorized in our agreement with our client. In no event shall S&ME be responsible for the safety or the means and methods of other parties at the project site. **The information presented in this field report has not been reviewed by an engineer and is to be considered preliminary.**

S&ME Form 691F03

S&ME
9751 Southern Pine Blvd
Charlotte, NC 28273
(704) 523-4726
(704) 525-3953 fax

Field Report

Date	Job No.
July 20, 2011	13556-07-017-05

Project/Location: PHR Ash LF Closure-Cover System Repair

To: File

Services Performed

- ☐ Concrete Testing
- ☐ Cylinder Pickup
- ☐ Asphalt Testing
- ☐ Steel Testing
- ☐ Asphalt Coring
- ☐ Concrete Coring
- ☐ Undercut Evaluation
- ☐ Foundation Evaluation
- ☐ Proofrolling
- ☐ In-Place Density
- ☐ Other (Explain)

Contractor	Weather/Temp
EGI	PC/71-95°

Present at Site: Bobby Lynn - Fred Brown, Kim Benson, Kyle Bancom

Time	Mileage
8.5	40.0

Observations/Remarks:

Onsite @ 7:15 am. EGI completed dress up of the borrow area. Client request wattles in channel C3, 14 installed. Stockpile area dressed up, all materials removed, left over washstone spread on access road into landfill. EGI perform general clean up around site. Surveyors (Sells) onsite topo'd type 2 repair area and B2 regrade on landfill top. Sides and Jet Clean to be onsite tomorrow. Set in on weekly construction progress meeting.

On-Site Representative/Company

Jimmy Addis
S&ME Personnel

Disclaimer: The presence of S&ME at the project site shall not be construed as an acceptance or approval of activities at the site. S&ME is at the project site to perform specific services and has certain responsibilities which are limited to those specifically authorized in our agreement with our client. In no event shall S&ME be responsible for the safety or the means and methods of other parties at the project site. **The information presented in this field report has not been reviewed by an engineer and is to be considered preliminary.**

S&ME Form FRIF02

S&ME
9751 Southern Pine Blvd
Charlotte, NC 28273
(704) 523-4726
(704) 525-3953 fax

Field Report

Date	Job No.
July 21, 2011	1356-07-017-05

Project/Location: PHR Ash LF Closure - Cover System Retrofit

Contractor	Weather/Temp
EGI	PC/70-93°

Present at Site: Bobby Lynn

Time	Mileage
11.0	115.0

To: File

Services Performed

- ☐ Concrete Testing
- ☐ Cylinder Pickup
- ☐ Asphalt Testing
- ☐ Steel Testing
- ☐ Asphalt Coring
- ☐ Concrete Coring
- ☐ Undercut Evaluation
- ☐ Foundation Evaluation
- ☐ Proofrolling
- ☐ In-Place Density
- ☐ Other (Explain)

Observations/Remarks:

Onsite @ 7am. EGI installed 4 wattles in channel B2, took 2 of these out of channel C3, used up all they had onsite. Observe matting of type 2 repair area w/ DS-75, 26 rolls installed, per manufacture's recommendation. EGI cleaned up, mobilize offsite. Jet Clean did camera inspection on new sections of down drain ~ DI-1 to DI-2 and from DI-2 to DI-3, looked o.k.. Sides Seeding sowed channel 7 edges (beyond matting) - Borrow area - East stockpile area, and repair/reseed channel B2 that washed from 7/19 rain event, also add one more roll of Excel R1 to B2, back towards the West. Scott Hurdle to speak w/ Kim Benson about small bare spots along NE down drain lines, Sides only fertilized again today. Sides also sowed type 2 repair area today.

*My total of perimeter drain = 2113 ft.,
Type 1 = 1583 ft.
Type 2 = 530 ft.

Left site @ 4:15pm.

On-Site Representative/Company

Jimmy Addo
S&ME Personnel

Disclaimer: The presence of S&ME at the project site shall not be construed as an acceptance or approval of activities at the site. S&ME is at the project site to perform specific services and has certain responsibilities which are limited to those specifically authorized in our agreement with our client. In no event shall S&ME be responsible for the safety or the means and methods of other parties at the project site. **The information presented in this field report has not been reviewed by an engineer and is to be considered preliminary.**

S&ME Form FRLF03

Erosion Control

Silt Fence
Is it installed per detail and at appropriate locations? Yes

Does it need maintenance? No

*Can it be removed? Not until vegetation established.

Is scope of work complete? Yes

Can it be closed out?

Silt Fence Outlets
Is it installed per detail and at appropriate locations? Yes → 2 installed @ PD-2

Does it need maintenance? No

* Can it be removed? Not until vegetation established.

Can it be closed out?

Diversion Channels
See specific channel repair areas.

Wattles
See specific channel repair areas.

Riprap Aprons
Is it installed per detail and at correct locations? Yes

Is scope of work complete? Yes

? *Grassing*
Is there a seeding maintenance warranty? 1 yr.

See specific repair areas.

Borrow Area

Channel C-6 Repair DG/JA 7-19-11

Are existing check dams removed? Yes

Is soil cover erosion repaired? Yes

Is channel geometry per plan? Yes

Is correct matting installed? Yes ~C350 = 6 rolls

Is matting installed per manufacturer's recommendations? Yes

Are wattles installed at 50-foot intervals? Yes - 6 total

Are wattles installed per detail? Yes

Does channel need any additional maintenance? No

Is there vegetation established (No) and/or was it seeded appropriately (Yes)? Sowed 7-7-11 (2nd time)

Is there as-built information on channel? No

Is scope of work complete? Yes

Channel C-7 Repair DG/JA 7-19-11

Is ash sediment removed? yes

Was removed ash disposed of at ash basin? yes

Is channel geometry per plan? yes

Is correct matting installed? yes DS-75 ~20 rolls

Is matting installed per manufacturer's recommendations? yes

Are wattles installed at 50-foot intervals? yes 19 total.

Are wattles installed per detail? yes

Does channel need any additional maintenance? No

Is there vegetation established (No) and/or was it seeded appropriately (yes)? sowed 7-13-11

Is there as-built information on channel? yes

Is scope of work complete? yes

✓ - Clean out pipes 7-19-11. Only what could be reached w/a shovel.
✓ - Reseed edges of matting. Sides to take care of. 7-21-11

Channel B-2 Repair DG/JA 7-19-11

Is soil cover erosion repaired with backfilled structural fill? yes

Is channel geometry per plan? yes

Is correct matting installed? ~~yes~~ Excel R1 installed. DS-75 per plan

Is matting installed per manufacturer's recommendations? yes

✓ Does channel need any additional maintenance? Clean up ie., rocks & old matting on surface & under new matting. 7-19-11

Is there vegetation established and/or was it seeded appropriately? No - Sowed on 7-18-11 "Sides" yes

✓ Is there as-built information on channel? Not yet. Sells to shoot. 7-20-11

Is scope of work complete? yes

- 4 wattles added on 7-21-11
- 7 rolls Excel R1

Down Drain and Seepage Diaphragm Repair DG/JA 7-19-11

Is there as-built information on pipes and final cover? Yes

* Is there a camera inspection? In submittals. Jet Clean to do.

Can you monitor flow from seepage diaphragm inspection port? No

Is there vegetation established and/or was it seeded appropriately? Yes Yes has not taken in some areas. ≈60/40% per DG.

Is there erosion in this area? little on side slope off the top, where grass has not come in. - Needs touch up. Sides to take care of.

Is scope of work complete? Yes

Sowed 6-27-11 "Sides"

✓ Camera Inspection by Jet Clean - 7/21/11

Sides fertilized again ~7-21-11. Scott Hurdle to speak w/ Kim Benson about bare spots.

Perimeter Drain Repair - Type 1 (Channels C1, C2, & C3) DG/JA 7-19-11

Is soil cover graded back smoothly? yes

Is channel geometry per plan? yes

Is correct matting installed? yes

Is matting installed per manufacturer's recommendations? yes

Are wattles installed at 50-foot intervals in Channel C1? yes - 18 total

Are wattles in Channel C1 installed per detail? yes

Is there vegetation established and/or was it seeded appropriately? yes - 6/28-29/11. * One area near NE corner not coming in. Needs Refertilization.
- EGI complete 7-19-11

yes yes

Is there erosion in this area? No

Is there as-built information on piping and final cover? Yes

Is scope of work complete? Yes

Other

- Old silt fence. Can it be removed?
- Suggest to customer, areas that need awareness, PD-1?2, for mowing purposes. Also seepage diaphragm observation pipes.

Perimeter Drain Repair - Type 2 (Channel C3) JA 7-20-11

Is soil cover graded back smoothly and to original grades? Yes

Are there estimated quantities of excavation based on field measurements? Yes ~ load counts.

Does subgrade fill meet compaction/moisture requirements? Yes

Are geomembrane CQA forms complete? Yes

Did Geosynthetic Installer submit written certification? "Omit"

Is channel geometry per plan? Yes

Is correct matting installed? Yes ~ DS-75

Is matting installed per manufacturer's recommendations? Yes

Is there vegetation established (No) and/or was it seeded appropriately (Yes)? Sowed 7-19 & 20-11

Is there erosion in this area? No

Is there as-built information on restored subgrade, geomembrane, and final cover? To be completed today 7-20-11.

Is scope of work complete? Yes

OTHER KB 7-20-11

- Client request wattles be installed. 14 put in. Two removed on 7-21-11 placed these in B2.
- 38 rolls DS-75 ~ ditch & side slope

Perimeter Drain Outlets (PD-1 and PD-2)

Is perimeter road graded back to original grade at pipe crossing? yes

Are there any additional areas of perimeter road in need of stone surfacing? No

Is there as-built information on junction boxes and pipes? yes

Is scope of work complete? yes

Sowed 7-18-11 "sides"

OTHER

- SFO's possible maintenance.
✓ SFO's wire cloth gaps at bottom. PD-1 & 2. Repaired on 7-19-11.

- 2 wattles around PD-JB-1
- 1 wattles @ PD-JB-2

Closeout Procedures (Specification Section 01000, Part 8.1A)

Record Drawings (reproducible).

Guarantees of all materials and workmanship.

Contractor's Affidavit, Release and Waiver of Claims.

Consent of Surety (if applicable).

Final State/County Sales/Use Tax Statement (if applicable).

Complete list of all Subcontractors and areas of work performed.

Proof of Compliance with Building Standards.

MWBE Documentation of Final Contract Payments (if applicable).

Construction Photographs

S&ME
9751 Southern Pine Blvd.
Charlotte, NC 28273

Date: 6/20/11

Photographer: James Addis

1	**Location / Orientation**	At Drop Inlet #2 facing northwest towards downstream Drop Inlet #3
	Remarks	Exposed ADS double wall HDPE down drain pipe prior to removal

Date: 6/21/11

Photographer: James Addis

2	**Location / Orientation**	At drop inlet facing southwest towards upstream drop inlet
	Remarks	New SDR 32.5 solid wall HDPE down drain pipe in place

S&ME
9751 Southern Pine Blvd.
Charlotte, NC 28273

Date: 6/23/11

Photographer: James Addis

3	**Location / Orientation**	At drop inlet facing northwest towards downstream drop inlet
	Remarks	HDPE piping for seepage diaphragm installation

Date: 6/27/11

Photographer: James Addis

4	**Location / Orientation**	Beginning of Type 1 retrofit on north west perimeter
	Remarks	Typical perimeter drain with corrugated, perforated HDPE pipe, #57 stone, and geotextile; also note 12 inches of geocomposite extension

S&ME
9751 Southern Pine Blvd.
Charlotte, NC 28273

Date: 6/27/11

Photographer: James Addis

5	**Location / Orientation**	Beginning of Type 1 retrofit on north west perimeter facing west
	Remarks	Soil cover placed following perimeter drain installation

Date: 6/27/11

Photographer: James Addis

6	**Location / Orientation**	Beginning of Type 1 retrofit on north west perimeter facing west
	Remarks	Area seeded and matted with slope and channel matting following soil cover placement

S&ME
9751 Southern Pine Blvd.
Charlotte, NC 28273

Date: 7/6/11

Photographer: Ken Daly

7	**Location / Orientation**	North east perimeter
	Remarks	Perimeter drain excavation; visible indication of transported material behind geosynthetics trench

Date: 7/6/11

Photographer: James Addis

8	**Location / Orientation**	North east perimeter
	Remarks	Perimeter drain excavation; visible indication of transported material behind geosynthetics trench

S&ME
9751 Southern Pine Blvd.
Charlotte, NC 28273

Date: 7/11/11

Photographer: James Addis

9	**Location / Orientation**	North east perimeter
	Remarks	Perimeter drain excavation; significant settlement was observed; positive drainage of geosynthetics was affected

Date: 7/11/11

Photographer: Kyle Baucom

10	**Location / Orientation**	Type 2 retrofit area north of bench tie-in facing north
	Remarks	Soil cover excavated and exposed cover system geosynthetics

S&ME
9751 Southern Pine Blvd.
Charlotte, NC 28273

Date: 7/12/11

Photographer: Kyle Baucom

11	**Location / Orientation**	Type 2 retrofit area north of bench tie-in facing north
	Remarks	Existing subgrade following geosynthetics removal

Date: 7/12/11

Photographer: Kyle Baucom

12	**Location / Orientation**	Type 2 retrofit area facing north
	Remarks	Existing ash subgrade was spread and tracked prior to placing structural fill to restore subgrade

S&ME
9751 Southern Pine Blvd.
Charlotte, NC 28273

Date: 7/12/11

Photographer: Kyle Baucom

13	**Location / Orientation**	Type 2 retrofit area facing north
	Remarks	Structural fill placed to restore subgrade

Date: 7/13/11

Photographer: James Addis

14	**Location / Orientation**	Type 2 retrofit area facing south
	Remarks	Geomembrane deployed parallel to perimeter channel and road

S&ME
9751 Southern Pine Blvd.
Charlotte, NC 28273

Date: 7/15/11

Photographer: James Addis

15	**Location / Orientation**	Type 2 retrofit area facing north
	Remarks	Geocomposite deployed perpendicular to perimeter channel and road

Date: 7/15/11

Photographer: James Addis

16	**Location / Orientation**	Type 2 retrofit area facing south
	Remarks	Soil cover being placed

9751 Southern Pine Blvd.
Charlotte, NC 28273

Date: 7/20/11

Photographer: James Addis

17	**Location / Orientation**	Perimeter drain outlet facing north
	Remarks	Perimeter drain outlet junction box, aluminum grating, and outlet pipe

Date: 7/21/11

Photographer: James Addis

18	**Location / Orientation**	Upstream end of Channel C7 facing northeast
	Remarks	Accumulated sediment removed and restored to original channel geometry

S&ME
9751 Southern Pine Blvd.
Charlotte, NC 28273

Date: 7/21/11

Photographer: James Addis

19	**Location / Orientation**	Upstream end Channel B2 area facing east
	Remarks	Additional soil cover placed to proposed grades

Date: 7/20/11

Photographer: Kyle Baucom

20	**Location / Orientation**	Upstream end of Channel C6 area facing north
	Remarks	Check dams removed and soil cover erosion repaired

APPENDIX III – CONSTRUCTION QUALITY ASSURANCE (CQA) DOCUMENTATION

Field Density Test Results
Soils Laboratory Test Results
Geosynthetics CQA Forms

Field Density Test Results

Summary of Density Test Results

Report Date: August 30, 2011

Project No.: 1356-07-017

Project Name: Duke Pine Hall Road- CM/CQA

Client: Duke Energy Belews Creek, 3195 Pine Hall Road, Belews Creek, North Carolina 27009

Test		In-Place Density Test			Check Plug Data		Reference Standard				Compaction		Location	Elevation or Stone Depth
No.	Date	Type	Dry Density	Moisture Content	Dry Density	Moisture Content	Type	Ref. Curve	MDD	Optimum Moisture Content	Percent Specified	Percent In-Place		
522	06/22/11	D 2937	**94.1**	**21.1**	95.3	17.1	D 698	S-30	99.0	21.5	95	**95**	25' S of DI-3	-2'
523	06/22/11	D 2937	**94.5**	**21.7**			D 698	S-30	99.0	21.5	95	**95**	35' N of DI-2	-1'
524	06/23/11	D 2937	**95.3**	**22.1**	95.1	19.6	D 698	S-30	98.5	22.0	95	**97**	30' N of DI-1	-2'
525	06/23/11	D 2937	**93.6**	**21.0**			D 698	S-30	98.5	22.0	95	**95**	80' N of DI-1	-1'
526	06/24/11	D 2937	**94.5**	**21.3**	93.1	18.6	D 698	S-30	98.6	21.4	95	**96**	30' N of DI-3	-2'
527	06/24/11	D 2937	**93.6**	**20.0**			D 698	S-30	98.6	21.4	95	**95**	10' N of DI-3	-1'
528	06/24/11	D 2937	**93.9**	**20.5**			D 698	S-30	98.6	21.4	95	**95**	60' N of DI-1	SG
529	06/24/11	D 2937	**94.6**	**22.2**			D 698	S-30	98.6	21.4	95	**96**	50' N of DI-2	SG
530	07/12/11	D 2937	**93.9**	**22.7**	94.9	19.5	D 698	S-27	97.5	23.0	95	**96**	Station 5+50	-4'
531	07/12/11	D 2937	**93.2**	**21.5**			D 698	S-27	97.5	23.0	95	**96**	Station 6+50	-3'
532	07/12/11	D 2937	**94.5**	**23.6**			D 698	S-27	97.5	23.0	95	**97**	Station 2+00	-2'
533	07/12/11	D 2937	**94.0**	**21.9**			D 698	S-27	97.5	23.0	95	**96**	Station 4+00	-1'
534	07/12/11	D 2937	**92.6**	**20.6**			D 698	S-27	97.5	23.0	95	**95**	Station 6+00	SG
535	07/15/11	D 2937	**91.4**	**19.8**	93.0	18.7	D 698	SF-1	95.0	22.0	95	**96**	Channel B2 West	SG
536	07/15/11	D 2937	**92.4**	**20.9**			D 698	SF-1	95.0	22.0	95	**97**	Channel B2 East	SG
537	07/18/11	D 2937	**93.1**	**21.2**	91.9	19.2	D 698	SF-1	94.5	22.0	95	**98**	Station 6+00	SG
538	07/18/11	D 2937	**92.2**	**19.9**			D 698	SF-1	94.5	22.0	95	**98**	Station 3+00	SG

* = Failed Specified Compaction, ** = Failed Specified Moisture Content

All Test Locations and Elevations are Approximate

Notes:

References: ASTM D 2937: Density of Soil In Place by the Drive Cylinder Method, ASTM D 698: Laboratory Compaction Characteristics of Soil Using Standard Effort

Distribution: David Grogg/Duke Energy, Kim Benson/Duke Energy

Kyle Baucom/S&ME, Inc.
Name (Technical Responsibility)

Signature

Staff Professional
Position

S&ME, Inc. 9751 So. Pine Blvd., Charlotte, NC 28273 (704) 523-4726 Fax (704) 525-3953

Laboratory Report Version 4.2

Moisture - Density Report

S&ME

S&ME Project #:	**1356-07-017-03**	Report Date:	September 30, 2008
Project Name:	**Pine Hall Road Ash Landfill Closure**	Test Date(s):	9/15-30/08
Client Name:	Duke Energy		
Project Address:	Belews Creek Steam Station		

Boring #:		Sample #:	S-27	Sample Date:	September 14, 2008
Location:	TP-17	Offset:		Depth:	Bulk
Sample Description:	Tan Silt w/Coarse to Fine Sand (ML)				

Maximum Dry Density **95.2** **PCF.** **Optimum Moisture Content** **22.7** **%**

ASTM D 698 Method A

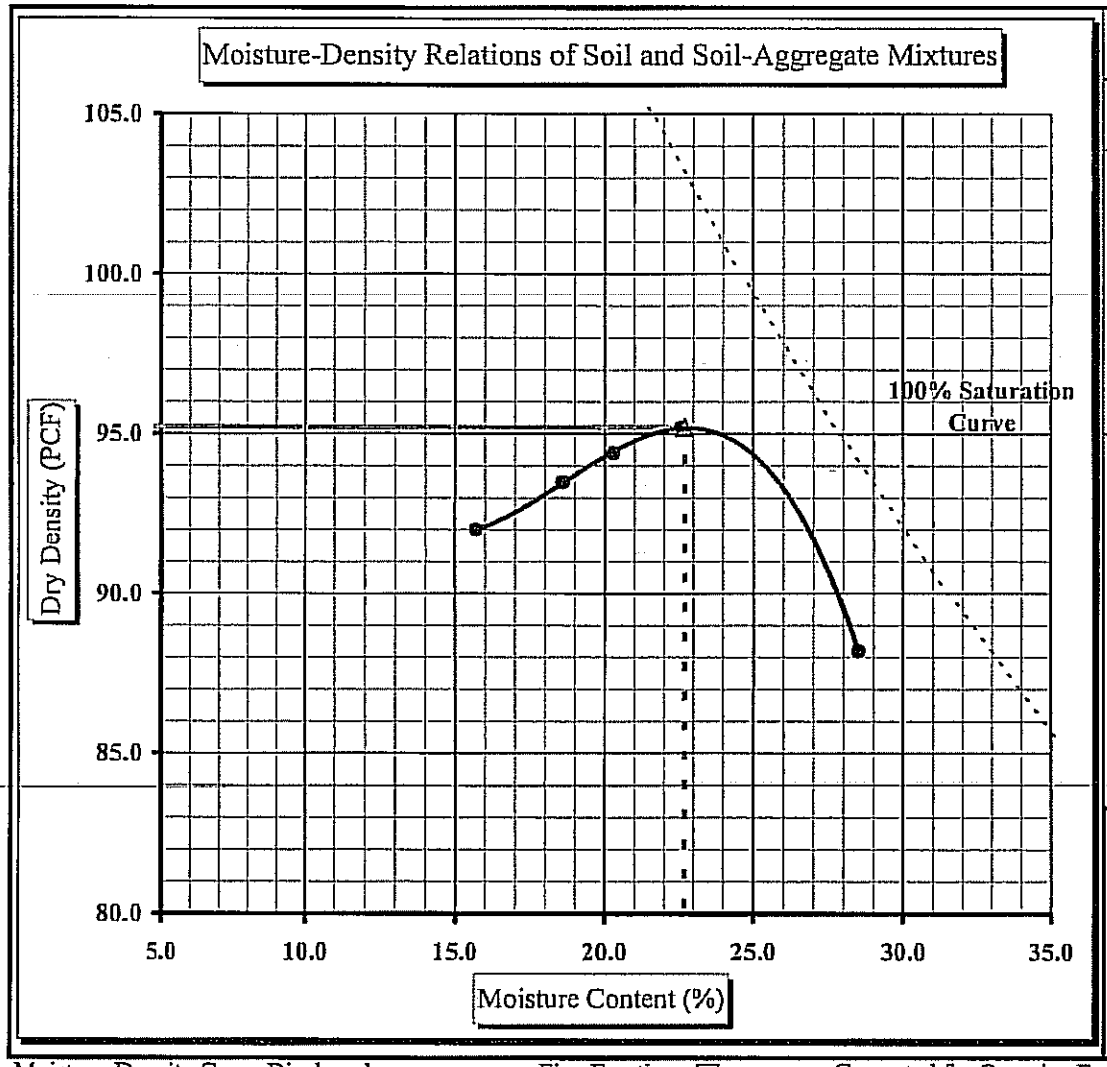

Soil Properties

Natural Moisture Content:	6.3%
Liquid Limit:	34
Plastic Limit:	35
Plastic Index:	-1
Specific Gravity:	

% Passing

3/4"	
1/2"	100
3/8"	99.7
#4	99

Oversize Fraction

Bulk Sp. Gravity
% Moisture
Oversize Fraction
MDD
Opt. MC

Moisture-Density Curve Displayed: Fine Fraction ☒ Corrected for Oversize Fraction (ASTM D 4718) ☐
Sieve Size used to separate the Oversize Fraction: #4 Sieve ☒ 3/8 inch Sieve ☐ 3/4 inch Sieve ☐
Mechanical Hammer ☒ Manual Hammer ☐ Moist Preparation ☒ Dry Preparation ☐

References: ASTM D 698: Laboratory Compaction Characteristics of Soil Using Standard Effort
ASTM D 2216: Laboratory Determination of Water (Moisture) Content of Soil and Rock by Mass
ASTM D 422: Particle Size Analysis of Soils
ASTM D 4318: Liquid Limit, Plastic Limit, & Plastic Index of Soils
ASTM D 2487: Classification of Soils for Engineering Purposes (Unified Soil Classification System)

Technical Responsibility: Kenneth Daly _____ Project Engineer
Signature

Laboratory Report Version 4.2

Moisture - Density Report

S&ME

S&ME Project #:	**1356-07-017-03**	Report Date:	November 24, 2008
Project Name:	**Pine Hall Road Ash Landfill Closure**	Test Date(s):	11/18-24/08
Client Name:	Duke Energy		
Client Address:			

Boring #:		Sample #:	S- 30 (CR)	Sample Date:	October 31, 2008
Location:	Flat Area SE	Offset:		Depth:	
Sample Description:	Tan Clayey Silt (ML) with Fine Sand				

Maximum Dry Density 98.6 **PCF.** **Optimum Moisture Content** 21.4 %

ASTM D 698 Method A

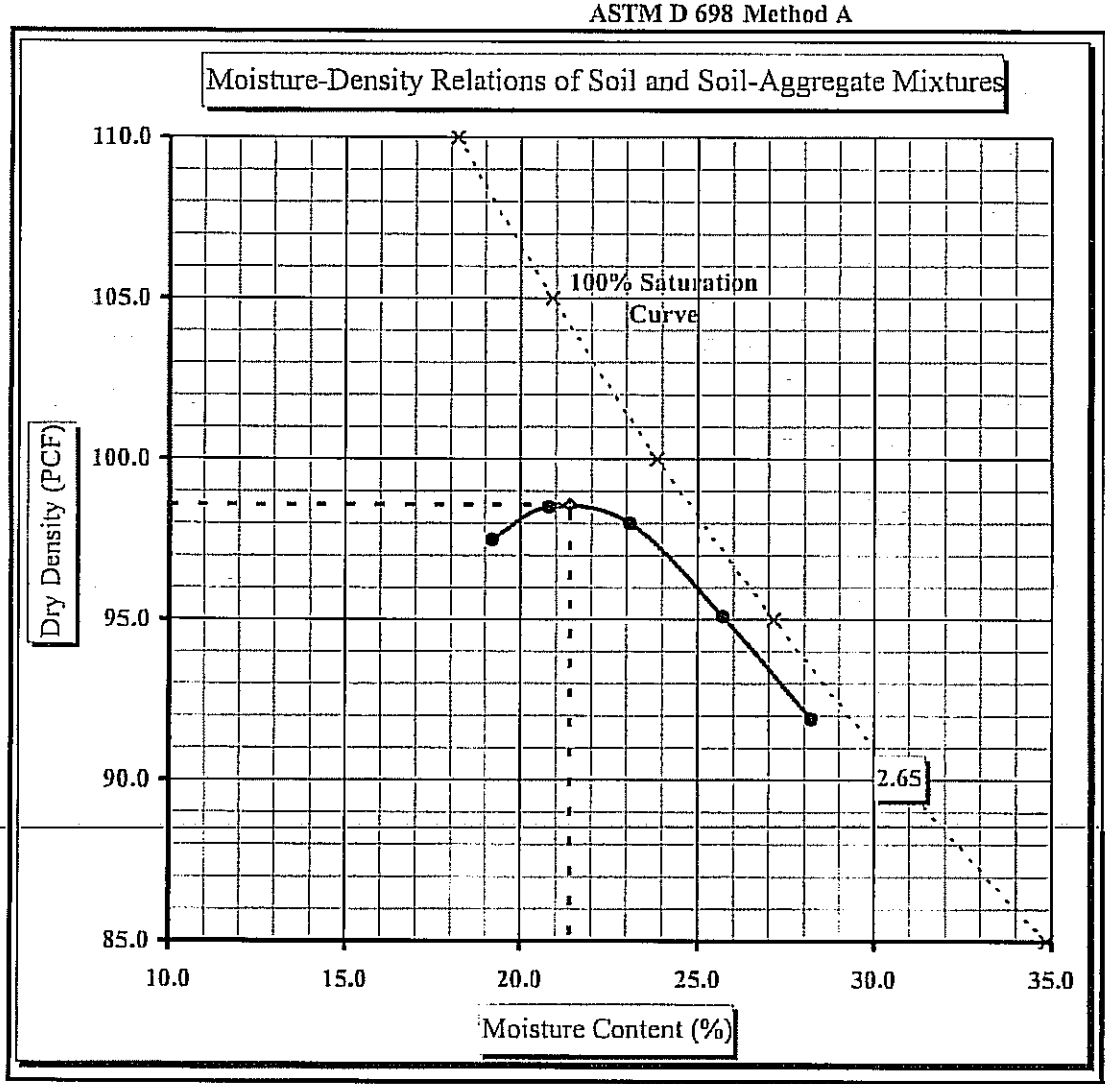

Soil Properties

Natural Moisture Content:	
Liquid Limit:	41
Plastic Limit:	28
Plastic Index:	13
Specific Gravity:	

% Passing

3/4"	
1/2"	
3/8"	
#4	98

Oversize Fraction

Bulk Sp. Gravity
% Moisture
Oversize Fraction
MDD
Opt. MC

Moisture-Density Curve Displayed: Fine Fraction ☒ Corrected for Oversize Fraction (ASTM D 4718) ☐

Sieve Size used to separate the Oversize Fraction: #4 Sieve ☒ 3/8 inch Sieve ☐ 3/4 inch Sieve ☐

Mechanical Hammer ☒ Manual Hammer ☐ Moist Preparation ☐ Dry Preparation ☒

References: ASTM D 698: Laboratory Compaction Characteristics of Soil Using Standard Effort
ASTM D 2216: Laboratory Determination of Water (Moisture) Content of Soil and Rock by Mass
ASTM D 422: Particle Size Analysis of Soils
ASTM D 4318: Liquid Limit, Plastic Limit, & Plastic Index of Soils
ASTM D 2487: Classification of Soils for Engineering Purposes (Unified Soil Classification System)

Technical Responsibility: Ken Daly _____ 0
Signature

Form No. TR-D698-2
Revision No. : 0
Revision Date: 11/21/07

Moisture - Density Report

S&ME

Quality Assurance

S&ME, Inc. ~ 9751 Southern Pine Boulevard ~ Charlotte, NC 28273

S&ME Project #:	~~1357~~ 1332-07-017-05	Report Date:	6/23/11
Project Name:	Pine Hall Road Closure Retrofit	Test Date(s):	6/20-23/11
Client Name:	Duke Energy		
Client Address:	3195 Pine Hall Road, Belews Creek, NC 27009		
Boring #:	Sample #: SF-1	Sample Date:	6/16/2011
Location:	**See Comments Below Offset:	Depth:	
Sample Description:	Brown Tan Coarse to Fine Sandy Silt (ML)		

Maximum Dry Density 94.1 PCF. Optimum Moisture Content 21.8%

ASTM D 698 - - Method A

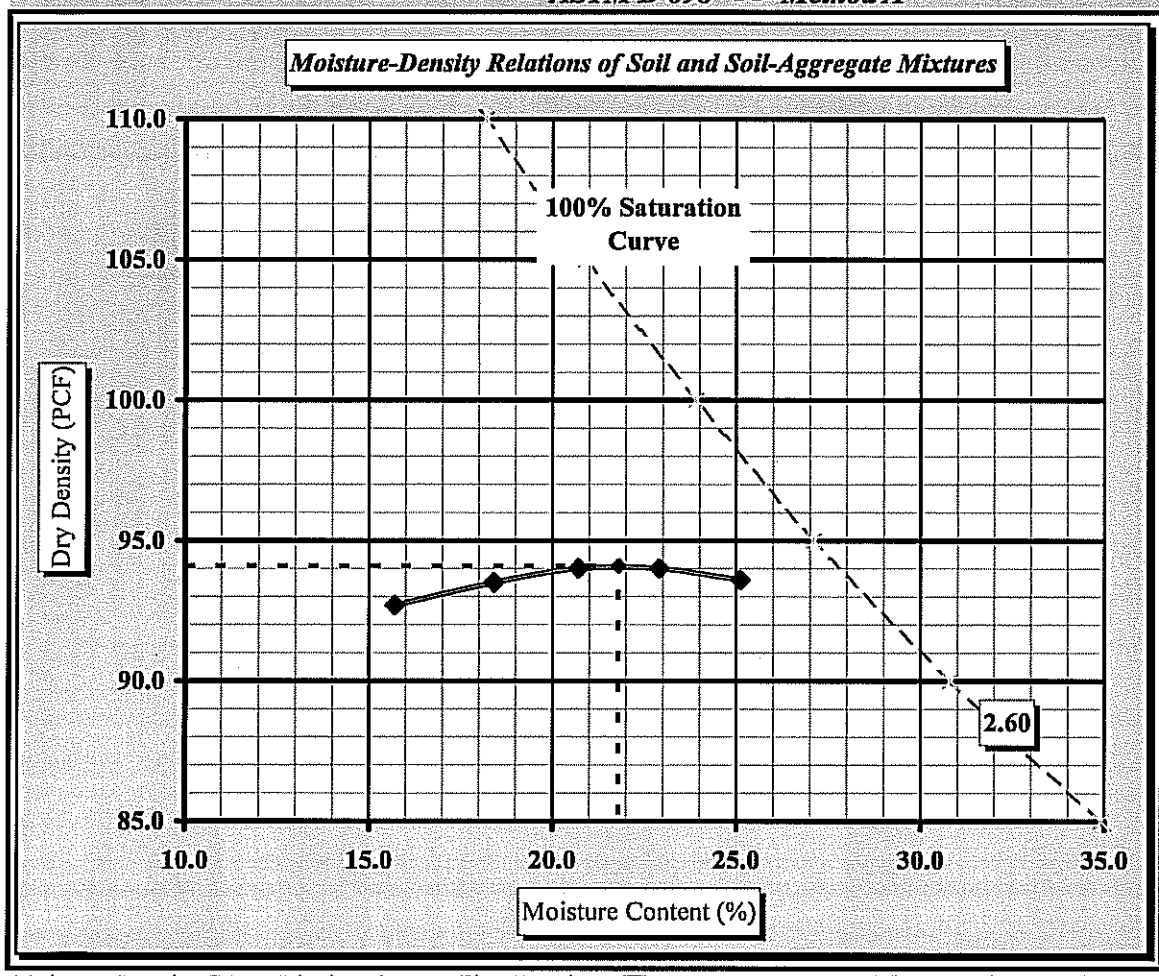

Soil Properties

Natural Moisture Content	**14.4%**
Specific Gravity of Soil (D854)	**ND**
Liquid Limit	**36**
Plastic Limit	**37**
Plastic Index	**-1**

% Passing

3/4"	100.0%
3/8"	97.3%
#4	96.9%
#10	95.6%
#40	93.3%
#60	91.2%
#200	54.0%

Oversize Fraction

Bulk Gravity
% Moisture
% Oversize
MDD
Opt. MC

Moisture-Density Curve Displayed: Fine Fraction ☒ Corrected for Oversize Fraction (ASTM D 4718) ☐

Sieve Size used to separate the Oversize Fraction: #4 Sieve ☒ 3/8 inch Sieve ☐ 3/4 inch Sieve ☐

Mechanical Rammer ☒ Manual Rammer ☐ Moist Preparation ☐ Dry Preparation ☒

References / Comments / Deviations:

Sample Location: Proposed Borrow Area ~ North End

ASTM D 2216: Laboratory Determination of Water (Moisture) Content of Soil and Rock by Mass
ASTM D 698: Laboratory Compaction Characteristics of Soil Using Standard Effort

Kyle Baucom		Staff Professional	6/28/11
Technical Responsibility	*Signature*	*Position*	*Date*

This report shall not be reproduced, except in full, without the written approval of S&ME, Inc.

Soils Laboratory Test Results

Form No. TR-D698-1
Revision No. 0
Revision Date: 11/21/07

Moisture - Density Relationship

S&ME

ASTM D558, D698, D1557, AASHTO T99, T180

Quality Assurance

S&ME, Inc. ~ 9751 Southern Pine Boulevard ~ Charlotte, NC 28273

Project #:	1356 ~~1357~~-07-017-05	Report Date:	6/23/11
Project Name:	Pine Hall Road Closure Retrofit	Test Date(s)	6/20-23/11
Client Name:	Duke Energy		
Client Address:	3195 Pine Hall Road, Belews Creek, NC 27009		
Boring #:	Sample #: SF-1	Sample Date:	6/16/2011
Location:	**See Comments Below Offset:	Depth:	
Sample Description:	Brown Tan Coarse to Fine Sandy Silt (ML)		

Type and Specification	*S&ME ID #*	*Cal Date:*	*Type and Specification*	*S&ME ID #*	*Cal Date:*
Balance (0.1 g)	22182	6/8/2011	Compaction Mold	20231	12/29/2010
Balance	22182	6/8/2011	Compaction Hammer	20222	6/6/2011
Straightedge	20124	6/15/2011	Oven	10844	3/29/2011
Sieve #4	20211	4/13/2011			

Water Content Water Content requires GP 2 Balance (0.1 gram Readability). Check:

ASTM D2216 ☒ AASHTO T265 ☐ ASTM D4959 ☐ ASTM D4643 ☐

	Water Added:	300	360	420	240	180	480
	Tare #:	PTL	G	99	MJD	GH	13
A. Tare Weight	A.	167.5	156.6	157.1	159.7	162.9	156.6
B. Wet Wt + Tare Wt	B.	1038.9	1122.4	1218.9	1070.2	1160.2	1134.6
C. Dry Wt. + Tare Wt.	C.	889.5	942.3	1006.1	928.4	1025.1	922.1
D. Water Weight	B-C	149.4	180.1	212.8	141.8	135.1	212.5
E. Dry Weight	C-A	722.0	785.7	849.0	768.7	862.2	765.5
F. Moisture Content	100*D/E	**20.7%**	**22.9%**	**25.1%**	**18.4%**	**15.7%**	**27.8%**

Compaction Data Requires a GP 5 Balance for ASTM (1 gram or .0022 Lb. readability). Check:

ASTM D558 ☐ ASTM D 698 ☒ ASTM D1557 ☐ AASHTO T99 ☐ AASHTO T180 ☐

Method A ☒ Method B ☐ Method C ☐ Method D (ASTM 1978) ☐ AASHTO Method D ☐

G. Wt of Soil + Mold	G.	5961	5992	6016	5920	5867	5970
H. Wt. of Mold	H.	4255	4255	4255	4255	4255	4255
I. Wt. of Soil (g. or lbs.)	G-H	1706	1737	1761	1665	1612	1715
J. Wt of Soil (Lbs.)	I/453.6 or I	3.761	3.829	3.882	3.671	3.554	3.781
K. Mold Volume Factor	K.	30.16	30.16	30.16	30.16	30.16	30.16
L. Wet Density (PCF)	J*K	113.4	115.5	117.1	110.7	107.2	114.0
M. Dry Density (PCF)	L/(1+F)	**94.0**	**94.0**	**93.6**	**93.5**	**92.7**	**89.2**

Sieve Size used to separate the Oversize Fraction: #4 Sieve ☒ 3/8 inch Sieve ☐ 3/4 inch Sieve ☐

Mechanical Rammer ☒ Manual Rammer ☐ Moist Preparation ☐ Dry Preparation ☒

References / Comments / Deviations:

Sample Location: Proposed Borrow Area ~ North End

Jennifer Olsen	Jennifer L Olsen	NICET/117926	6/23/2011
Technician Name	*Signature*	*Certification Type/No.*	*Date*
Kyle Baucom	Kyle Baucom	Staff Professional	6/28/11
Technical Responsibility	*Signature*	*Position*	*Date*

This report shall not be reproduced, except in full without the written approval of S&ME, Inc.

Form No. TR-D698-2
Revision No. : 0
Revision Date: 11/21/07

Moisture - Density Report

S&ME

Quality Assurance

S&ME, Inc. ~ 9751 Southern Pine Boulevard ~ Charlotte, NC 28273

S&ME Project #:	~~1357~~ 1332-07-017-05	Report Date:	6/23/11
Project Name:	Pine Hall Road Closure Retrofit	Test Date(s):	6/20-23/11
Client Name:	Duke Energy		
Client Address:	3195 Pine Hall Road, Belews Creek, NC 27009		
Boring #:	Sample #: SF-1	Sample Date:	6/16/2011
Location:	**See Comments Below Offset:	Depth:	
Sample Description:	Brown Tan Coarse to Fine Sandy Silt (ML)		

Maximum Dry Density 94.1 PCF. Optimum Moisture Content 21.8%

ASTM D 698 - - Method A

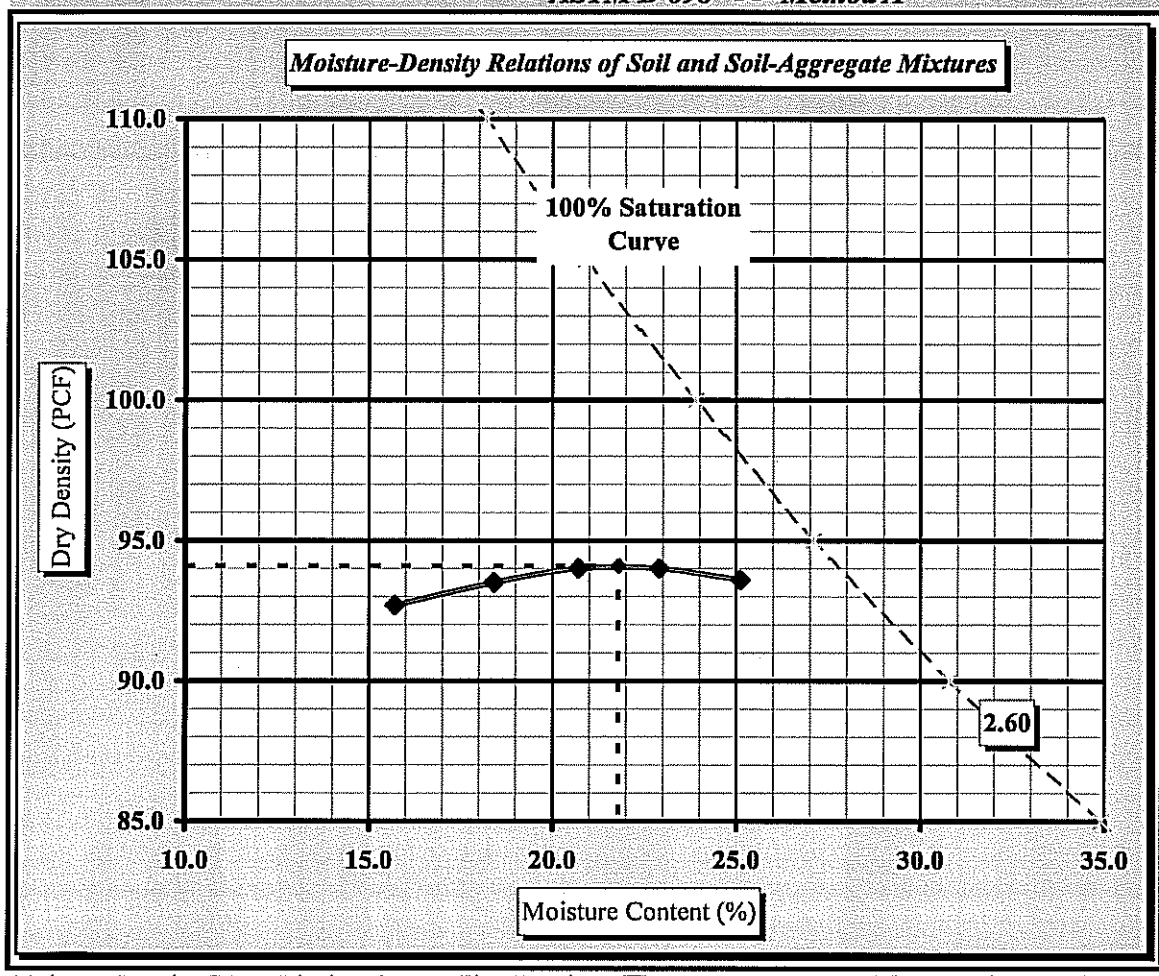

Soil Properties

Natural Moisture Content	**14.4%**
Specific Gravity of Soil (D854)	**ND**
Liquid Limit	**36**
Plastic Limit	**37**
Plastic Index	**-1**

% Passing

3/4"	100.0%
3/8"	97.3%
#4	96.9%
#10	95.6%
#40	93.3%
#60	91.2%
#200	54.0%

Oversize Fraction

Bulk Gravity
% Moisture
% Oversize
MDD
Opt. MC

Moisture-Density Curve Displayed: Fine Fraction ☒ Corrected for Oversize Fraction (ASTM D 4718) ☐

Sieve Size used to separate the Oversize Fraction: #4 Sieve ☒ 3/8 inch Sieve ☐ 3/4 inch Sieve ☐

Mechanical Rammer ☒ Manual Rammer ☐ Moist Preparation ☐ Dry Preparation ☒

References / Comments / Deviations:

Sample Location: Proposed Borrow Area ~ North End

ASTM D 2216: Laboratory Determination of Water (Moisture) Content of Soil and Rock by Mass
ASTM D 698: Laboratory Compaction Characteristics of Soil Using Standard Effort

Kyle Baucom		Staff Professional	6/28/11
Technical Responsibility	*Signature*	*Position*	*Date*

This report shall not be reproduced, except in full, without the written approval of S&ME, Inc.

Form No. TR-D422-2
Revision No. 0
Revision Date: 02/20/08

Particle Size Analysis of Soils

ASTM D 422

S&ME

S&ME, Inc. ~ 9751 Southern Pine Boulevard ~ Charlotte, NC 28273

Project #: ~~1357~~ 1356-07-017-05 — Report Date: 6/22/11
Project Name: Pine Hall Road Closure Retrofit — Test Date(s): 6/16-22/11
Client Name: Duke Energy — Address: 3195 Pine Hall Road, Belews Creek, NC 27009
Boring #: — Sample #: SF-1 — Sample Date: 6/16/11
Location: — Offset: — Elevation:
Sample Description: Brown Tan Coarse to Fine Sandy Silt (ML)

Pan #:		Beaker #:			**Apparent Relative Density (Assumed)**		**2.650**				
Hydrometer Jar #:											
Pan Tare Weight (grams):					**Moisture Content**	Hygroscopic	Natural				
Total Sample Air Dried Wt. + tare wt. (grams):			456.54		Tare #	L-10	T-4				
Weight of Total Sample Air Dried:			456.54	A	Tare Wt.	12.54	81.76				
Weight of Air Dried Hydrometer Sample (g):			50.00	B	Wet Wt. + A	23.18	447.81				
Total Sample Oven Dried:			441.75	C	Dry Wt. + A	22.82	401.81				
Hydrometer Sample Oven Dried (W):			48.31	D	Water Wt. (B-C)	0.36	46.00				
% Passing #10:			95.6%	E	Dry Wt. (C-A)	10.28	320.05				
Correction Factor a (Table 1):			1.00		% Moisture (100 x D/E)	3.50%	14.4%				

Sieve	Retained Wt.	Percent Passing	
3.0"	0.0	Pan # (washed)	100.0%
1.5"	0.0		100.0%
1.0"	0.0		100.0%
3/4"	0.0		100.0%
1/2"	6.7		98.5%
3/8"	11.9	Soil Mortar	97.3%
#4	13.5		96.9%
#10	19.3	**100.0%**	95.6%
#20	0.5	98.9%	94.6%
#40	1.2	97.6%	93.3%
#60	2.2	95.4%	91.2%
#100	6.8	85.9%	82.1%
#200	21.0	56.5%	54.0%

Description of Sand & Gravel Particles: Rounded ☐ Angular ☐ Hard & Durable ☐ Soft ☐ Weathered & Friable ☐
Stirring Apparatus: A ☐ B ☐ — Dispersion Time: 1 min. — Sodium Hexametaphosphate: 40 g./ Liter
Balance: *ID No.* 3222 *Cal. Date:* 6/29/2010 — Hydrometer: *ID No.* 3901 *Cal. Date:* 3/26/2010
Control Cylinder ☒ **Composite Correction** ☐ **Type: 151H** ☐ **152H** ☒

Time T (Min.)	Temp. (0.5 °C)	Hydrometer Reading	Corrections: Control Cylinder	Corrections: Composite Correction	Hydrometer R	Percent Passing: P(-#10) = (R x a / W) x 100	Percent Passing: P (total) = P x % Passing #10	Effective Depth L	Table 3 K	Diameter D = K x ((L/T)^1/2
1	24.0	26.0	4.5		21.50	44.5%	42.6%	12.8	0.01301	0.04649
2	24.0	19.0	4.5		14.50	30.0%	28.7%	13.9	0.01301	0.03432
5	24.0	14.5	4.5		10.00	20.7%	19.8%	14.7	0.01301	0.02227
15	24.0	10.5	4.5		6.00	12.4%	11.9%	15.3	0.01301	0.01314
30	24.0	9.5	4.5		5.00	10.4%	9.9%	15.5	0.01301	0.00934
60	24.0	8.5	4.5		4.00	8.3%	7.9%	15.6	0.01301	0.00664
250	24.0	8.0	4.5		3.50	7.2%	6.9%	15.7	0.01301	0.00326
1440	24.0	6.5	4.5		2.00	4.1%	4.0%	16.0	0.01301	0.00137

References / Comments / Deviations ASTM D 422, D 2487, D 4318

Karen Warner	NICET 117900	Kyle Baucom	Staff Professional	6/22/11
Technician Name	*Certification #*	*Technical Responsibility*	*Position*	*Date*

Form No. TR-D422-3
Revision No. 0
Revision Date: 02/20/08

Particle Size Analysis of Soils

ASTM D422

Quality Assurance

S&ME, Inc. ~ 9751 Southern Pine Boulevard ~ Charlotte, NC 28273

S&ME Project #:	~~1357~~ 1356-07-017-05	Report Date:	6/22/11
Project Name:	Pine Hall Road Closure Retrofit	Test Date(s):	6/16-22/11
Client Name:	Duke Energy		
Address:	3195 Pine Hall Road, Belews Creek, NC 27009		
Boring #:	Sample #: SF-1	Sample Date:	6/16/11
Location:	Offset:	Elevation:	
Sample Description:	Brown Tan Coarse to Fine Sandy Silt (ML)		

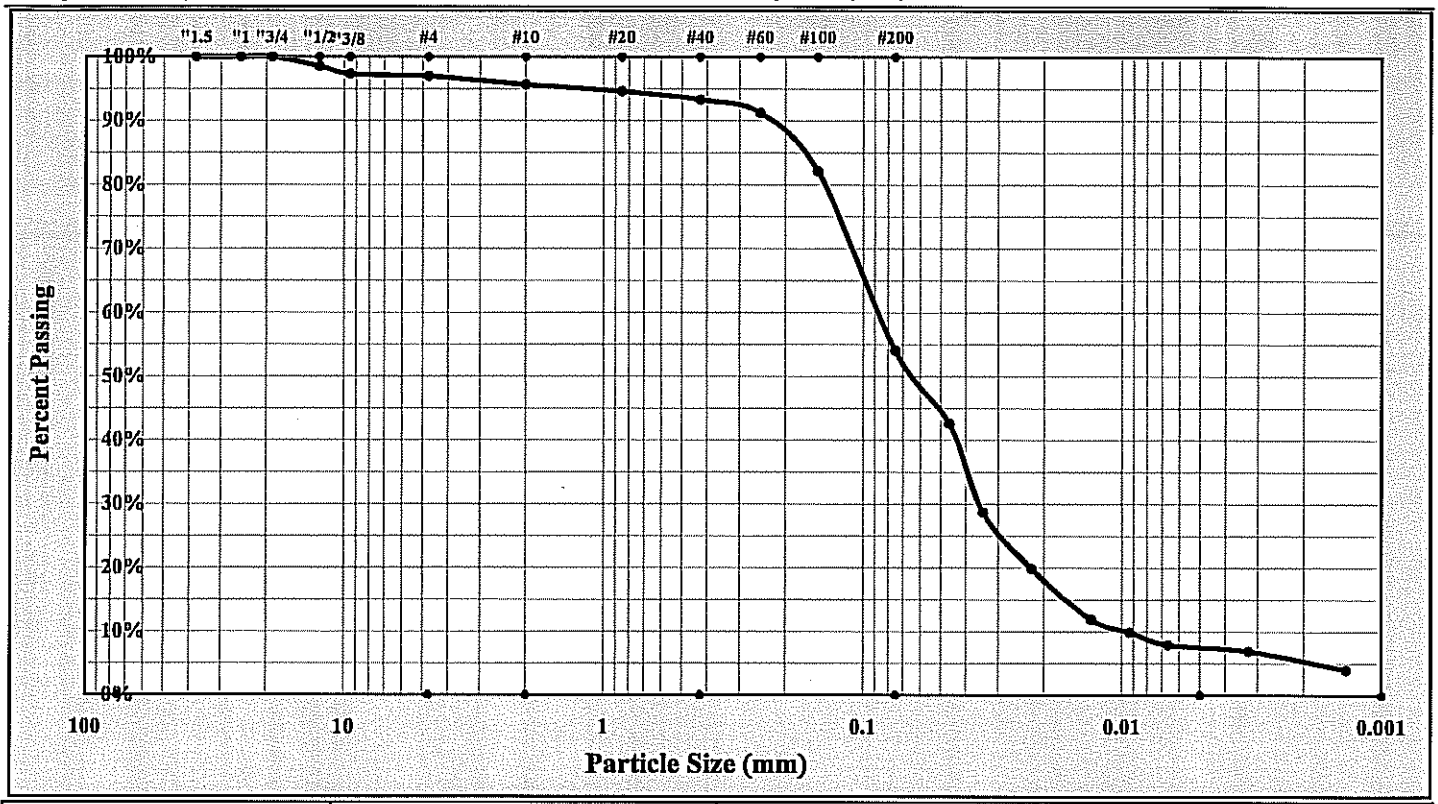

Cobbles	< 300 mm (12") and > 75 mm (3")	Fine Sand	< 0.425 mm and > 0.075 mm (#200)
Gravel	< 75 mm and > 4.75 mm (#4)	Silt	< 0.075 and > 0.005 mm
Coarse Sand	< 4.75 mm and >2.00 mm (#10)	Clay	< 0.005 mm
Medium Sand	< 2.00 mm and > 0.425 mm (#40)	Colloids	< 0.001 mm

Maximum Particle Size:	1/2"	Gravel:	3.1%	Silt	46.5%
Silt & Clay (% Passing #200):	54.0%	Total Sand:	42.9%	Clay	7.5%
ent Relative Density (Assumed)	2.650	Moisture Content	14.4%	Colloids	
Liquid Limit	NP	Plastic Limit	NP	Plastic Index	NP
Coarse Sand:	1.3%	Medium Sand:	2.3%	Fine Sand:	39.3%

Description of Sand and Gravel: Rounded ☐ Angular ☐ Hard & Durable ☐ Soft ☐ Weathered & Friable ☐

Apparatus B: Air Jet Dispersion — Dispersion Period: 1 min. Dispersing Agent: Sodium Hexametaphosphate: 40 g./ Liter

References / Comments / Deviations: ASTM D 4318, D 854, D 2487

Kyle Baucom	[signature]	Staff Professional	6/28/11
Technical Responsibility	*Signature*	*Position*	*Date*

This report shall not be reproduced, except in full, without the written approval of S&ME, Inc.

Form No. TR-D4318-T89-90
Revision No. 0
Revision Date: 11/20/07

Liquid Limit, Plastic Limit, and Plastic Index

S&ME

Another code *ASTM D 4318* ☒ *AASHTO T 89* ☐ *AASHTO T 90* ☐ ***Quality Assurance***

S&ME, Inc. ~9751 Southern Pine Boulevard,Charlotte, NC 28273

Project #:	1356 ~~1357~~-07-017-05	Report Date:	6/21/11
Project Name:	Pine Hall Road Closure Retrofit	Test Date(s)	6/16-21/11
Client Name:	Duke Energy		
Client Address:	3195 Pine Hall Road, Belews Cxreek, NC 27009		
Boring #:	Sample #: SF-1	Sample Date: 6/16/11	
Location:	Offset:	Elevation:	
Sample Description:	Brown Tan Coarse to Fine Sandy Silt (ML)		

Type and Specification	*S&ME ID #*	*Cal Date:*	*Type and Specification*	*S&ME ID #*	*Cal Date:*
Balance (0.01 g)	3222	6/29/2010	Grooving tool	23359	9/1/2010
LL Apparatus	3611	10/15/2010	Grooving tool		
Oven	10844	3/29/2011	Grooving tool		

Pan #		Liquid Limit						Plastic Limit		
	Tare #:	7	BB	23				27	L-10	
A	Tare Weight	15.71	16.14	14.06				**13.89**	12.44	
B	Wet Soil Weight + A	26.11	26.86	23.99				20.87	19.39	
C	Dry Soil Weight + A	23.42	23.92	21.15				18.99	17.55	
D	Water Weight (B-C)	2.69	2.94	2.84				1.88	1.84	
E	Dry Soil Weight (C-A)	7.71	7.78	7.09				5.10	5.11	
F	% Moisture (D/E)*100	34.9%	37.8%	40.1%				36.9%	36.0%	
N	# OF DROPS	29	20	15				*Moisture Contents determined by ASTM D 2216*		
LL	LL = **F** * FACTOR									
Ave.	*Average*							**36.5%**		

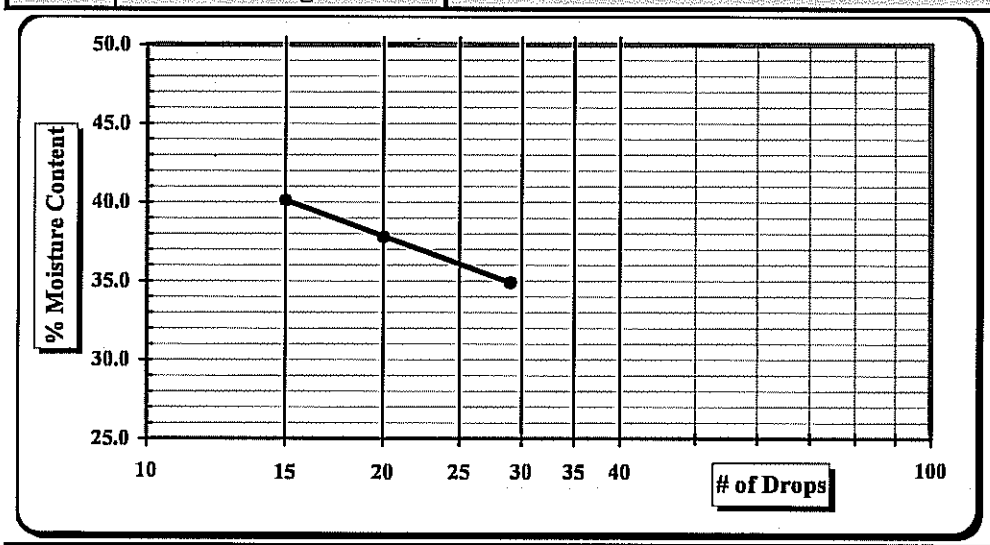

One Point Liquid Limit

N	Factor	N	Factor
20	0.974	26	1.005
21	0.979	27	1.009
22	0.985	28	1.014
23	0.99	29	1.018
24	0.995	30	1.022
25	1.000		

NP, Non-Plastic	☒
Liquid Limit	**36**
Plastic Limit	**37**
Plastic Index	**-1**
Group Symbol	**ML**
Multipoint Method	☑
One-point Method	☐

Wet Preparation ☐ Dry Preparation ☑ Air Dried ☑ *Estimate the % Retained on the #40 Sieve:*

Notes / Deviations / References:

ASTM D 4318: Liquid Limit, Plastic Limit, & Plastic Index of Soils

Karen Warner	6/22/11	Kyle Baucom	6/28/11
Technician Name	*Date*	*Technical Responsibility*	*Date*

This report shall not be reproduced, except in full, without the written approval of S&ME, Inc.

Form No. TR-D698-1
Revision No. 0
Revision Date: 11/21/07

Moisture - Density Relationship

S&ME

ASTM D558, D698, D1557, AASHTO T99, T180

Quality Assurance

S&ME, Inc. ~ 9751 Southern Pine Boulevard ~ Charlotte, NC 28273

Project #:	~~1357~~ 1356-07-017-05	Report Date:	6/23/11
Project Name:	Pine Hall Road Closure Retrofit	Test Date(s)	6/20-23/11
Client Name:	Duke Energy		
Client Address:	3195 Pine Hall Road, Belews Creek, NC 27009		
Boring #:	Sample #: SF-2	Sample Date:	6/16/2011
Location:	**See Comments Below Offset:	Depth:	
Sample Description:	Brown Tan Coarse to Fine Sandy Silt (ML)		

Type and Specification	*S&ME ID #*	*Cal Date:*	*Type and Specification*	*S&ME ID #*	*Cal Date:*
Balance (0.1 g)	22182	6/8/2011	Compaction Mold	20231	12/29/2010
Balance	22182	6/8/2011	Compaction Hammer	20222	6/6/2011
Straightedge	20124	6/15/2011	Oven	10844	3/29/2011
Sieve #4	20211	4/13/2011			

Water Content Water Content requires GP 2 Balance (0.1 gram Readability). Check:

ASTM D2216 ☒ AASHTO T265 ☐ ASTM D4959 ☐ ASTM D4643 ☐

	Water Added:	240	300	360	180	120	
	Tare #:	G	MJD	99	PTL	5K	
A. Tare Weight	A.	156.6	159.9	157.0	167.7	155.1	
B. Wet Wt + Tare Wt	B.	1180.1	1320.0	1167.6	1128.2	1289.4	
C. Dry Wt. + Tare Wt.	C.	1013.2	1111.7	970.9	989.7	1148.2	
D. Water Weight	B-C	166.9	208.3	196.7	138.5	141.2	
E. Dry Weight	C-A	856.6	951.8	813.9	822.0	993.1	
F. Moisture Content	100*D/E	**19.5%**	**21.9%**	**24.2%**	**16.8%**	**14.2%**	

Compaction Data Requires a GP 5 Balance for ASTM (1 gram or .0022 Lb. readability). Check:

ASTM D558 ☐ ASTM D 698 ☒ ASTM D1557 ☐ AASHTO T99 ☐ AASHTO T180 ☐

Method A ☒ Method B ☐ Method C ☐ Method D (ASTM 1978) ☐ AASHTO Method D ☐

G. Wt of Soil + Mold	G.	6051	6074	6042	6002	5939	
H. Wt. of Mold	H.	4255	4255	4255	4255	4255	
I. Wt. of Soil (g. or lbs.)	G-H	1796	1819	1787	1747	1684	
J. Wt of Soil (Lbs.)	I/453.6 or I	3.959	4.010	3.940	3.851	3.713	
K. Mold Volume Factor	K.	30.16	30.16	30.16	30.16	30.16	
L. Wet Density (PCF)	J*K	119.4	120.9	118.8	116.1	112.0	
M. Dry Density (PCF)	L/(1+F)	**99.9**	**99.2**	**95.7**	**99.4**	**98.1**	

Sieve Size used to separate the Oversize Fraction: #4 Sieve ☒ 3/8 inch Sieve ☐ 3/4 inch Sieve ☐

Mechanical Rammer ☒ Manual Rammer ☐ Moist Preparation ☐ Dry Preparation ☒

References / Comments / Deviations:

Sample Location: Proposed Borrow Area ~ South End

Jennifer Olsen	Jennifer L Olsen	NICET/117926	6/23/2011
Technician Name	*Signature*	*Certification Type/No.*	*Date*
Kyle Baucom	Kyle Baucom	Staff Professional	6/28/11
Technical Responsibility	*Signature*	*Position*	*Date*

This report shall not be reproduced, except in full without the written approval of S&ME, Inc.

Form No. TR-D698-2
Revision No. : 0
Revision Date: 11/21/07

Moisture - Density Report

S&ME

Quality Assurance

S&ME, Inc. ~ 9751 Southern Pine Boulevard ~ Charlotte, NC 28273

S&ME Project #:	~~1357~~ 1356-07-017-05	Report Date:	6/23/11
Project Name:	Pine Hall Road Closure Retrofit	Test Date(s):	6/20-23/11
Client Name:	Duke Energy		
Client Address:	3195 Pine Hall Road, Belews Creek, NC 27009		
Boring #:	Sample #: SF-2	Sample Date:	6/16/2011
Location:	**See Comments Below Offset:	Depth:	
Sample Description:	Brown Tan Coarse to Fine Sandy Silt (ML)		

Maximum Dry Density 99.9 PCF. Optimum Moisture Content 19.5%

ASTM D 698 - - Method A

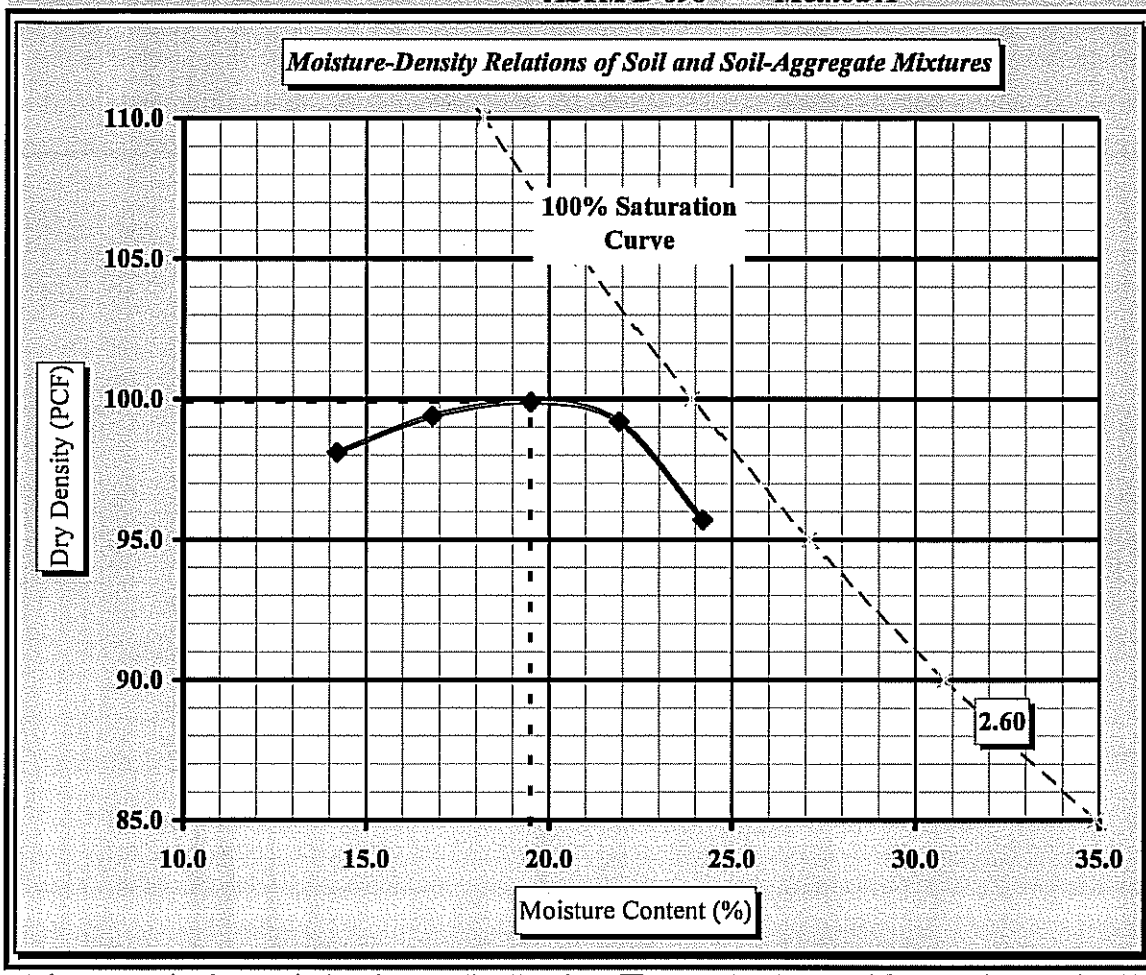

Soil Properties

Natural Moisture Content	**14.3%**
Specific Gravity of Soil (D854)	**ND**
Liquid Limit	**35**
Plastic Limit	**32**
Plastic Index	**3**

% Passing

3/4"	100.0%
3/8"	95.3%
#4	95.0%
#10	93.4%
#40	88.8%
#60	85.2%
#200	51.8%

Oversize Fraction

Bulk Gravity
% Moisture
% Oversize
MDD
Opt. MC

Moisture-Density Curve Displayed: Fine Fraction ☒ Corrected for Oversize Fraction (ASTM D 4718) ☐

Sieve Size used to separate the Oversize Fraction: #4 Sieve ☒ 3/8 inch Sieve ☐ 3/4 inch Sieve ☐

Mechanical Rammer ☒ Manual Rammer ☐ Moist Preparation ☐ Dry Preparation ☒

References / Comments / Deviations:

Sample Location: Proposed Borrow Area ~ South End

ASTM D 2216: Laboratory Determination of Water (Moisture) Content of Soil and Rock by Mass
ASTM D 698: Laboratory Compaction Characteristics of Soil Using Standard Effort

Kyle Baucom		Staff Professional	6/23/11
Technical Responsibility	*Signature*	*Position*	*Date*

This report shall not be reproduced, except in full, without the written approval of S&ME, Inc.

Form No. TR-D422-2
Revision No. 0
Revision Date: 02/20/08

Particle Size Analysis of Soils

ASTM D 422

S&ME

S&ME, Inc. ~ 9751 Southern Pine Boulevard ~ Charlotte, NC 28273

Project #:	~~1357~~ 1356-07-017-05	Report Date:	6/22/11
Project Name:	Pine Hall Road Closure Retrofit	Test Date(s):	6/16-22/11
Client Name:	Duke Energy	Address:	3195 Pine Hall Road, Belews Creek, NC 27009
Boring #:	Sample #: SF-2	Sample Date:	6/16/11
Location:	Offset:	Elevation:	
Sample Description:	Brown Tan Coarse to Fine Sandy Silt (ML)		

Pan #:		Beaker #:			**Apparent Relative Density (Assumed)**		**2.650**			
Hydrometer Jar #:										
Pan Tare Weight (grams):				**Moisture Content**	Hygroscopic	Natural				
Total Sample Air Dried Wt. + tare wt. (grams):		483.86		Tare #	7	333				
Weight of Total Sample Air Dried:		483.86	A	Tare Wt.	15.70	82.91				
Weight of Air Dried Hydrometer Sample (g):		50.00	B	Wet Wt. + A	27.32	534.57				
Total Sample Oven Dried:		460.06	C	Dry Wt. + A	26.71	478.16				
Hydrometer Sample Oven Dried (W):		47.38	D	Water Wt. (B-C)	0.61	56.41				
% Passing #10:		93.4%	E	Dry Wt. (C-A)	11.01	395.25				
Correction Factor a (Table 1):		1.00		% Moisture (100 x D/E)	5.54%	14.3%				

Sieve	Retained Wt.	Percent Passing	
3.0"	0.0	Pan # (washed)	100.0%
1.5"	0.0		100.0%
1.0"	0.0		100.0%
3/4"	0.0		100.0%
1/2"	16.1		96.5%
3/8"	21.6	Soil Mortar	95.3%
#4	23.1		95.0%
#10	30.4	**100.0%**	93.4%
#20	1.1	97.7%	91.2%
#40	2.3	95.1%	88.8%
#60	4.2	91.2%	85.2%
#100	9.0	81.0%	75.6%
#200	21.1	55.5%	51.8%

Description of Sand & Gravel Particles Rounded ☐ Angular ☐ Hard & Durable ☐ Soft ☐ Weathered & Friable ☐

Stirring Apparatus: A ☐ B ☐ Dispersion Time: 1 min. Sodium Hexametaphosphate: 40 g./ Liter

Balance: *ID No.* 3222 *Cal. Date:* 6/29/2010 Hydrometer: *ID No.* 3901 *Cal. Date:* 3/26/2010

Control Cylinder ☒ **Composite Correction** ☐ **Type: 151H** ☐ **152H** ☒

Time T (Min.)	Temp. (0.5 °C)	Hydrometer Reading	Corrections: Control Cylinder	Corrections: Composite Correction	Hydrometer R	Percent Passing: P(-#10) = (R x a / W) x 100	Percent Passing: P (total) = P x % Passing #10	Effective Depth L	Table 3 K	Diameter D = K x ((L/T)^1/2
1	24.0	27.0	4.5		22.50	47.5%	44.4%	12.6	0.01301	0.04619
2	24.0	21.0	4.5		16.50	34.8%	32.5%	13.6	0.01301	0.03391
5	24.0	16.5	4.5		12.00	25.3%	23.7%	14.3	0.01301	0.02202
15	24.0	14.0	4.5		9.50	20.1%	18.7%	14.7	0.01301	0.01290
30	24.0	12.5	4.5		8.00	16.9%	15.8%	15.0	0.01301	0.00919
60	24.0	11.0	4.5		6.50	13.7%	12.8%	15.2	0.01301	0.00655
250	24.0	10.0	4.5		5.50	11.6%	10.8%	15.4	0.01301	0.00323
1440	24.0	9.0	4.5		4.50	9.5%	8.9%	15.6	0.01301	0.00135

References / Comments / Deviations ASTM D 422, D 2487, D 4318

Karen Warner	NICET 117900	Kyle Baucom	Staff Professional	6/28/11
Technician Name	*Certification #*	*Technical Responsibility*	*Position*	*Date*

Form No. TR-D422-3
Revision No. 0
Revision Date: 02/20/08

Particle Size Analysis of Soils

ASTM D422

Quality Assurance

S&ME, Inc. ~ 9751 Southern Pine Boulevard ~ Charlotte, NC 28273

S&ME Project #:	~~1357~~ 1356-07-017-05	Report Date:	6/22/11
Project Name:	Pine Hall Road Closure Retrofit	Test Date(s):	6/16-22/11
Client Name:	Duke Energy		
Address:	3195 Pine Hall Road, Belews Creek, NC 27009		
Boring #:	Sample #: SF-2	Sample Date:	6/16/11
Location:	Offset:	Elevation:	
Sample Description:	Brown Tan Coarse to Fine Sandy Silt (ML)		

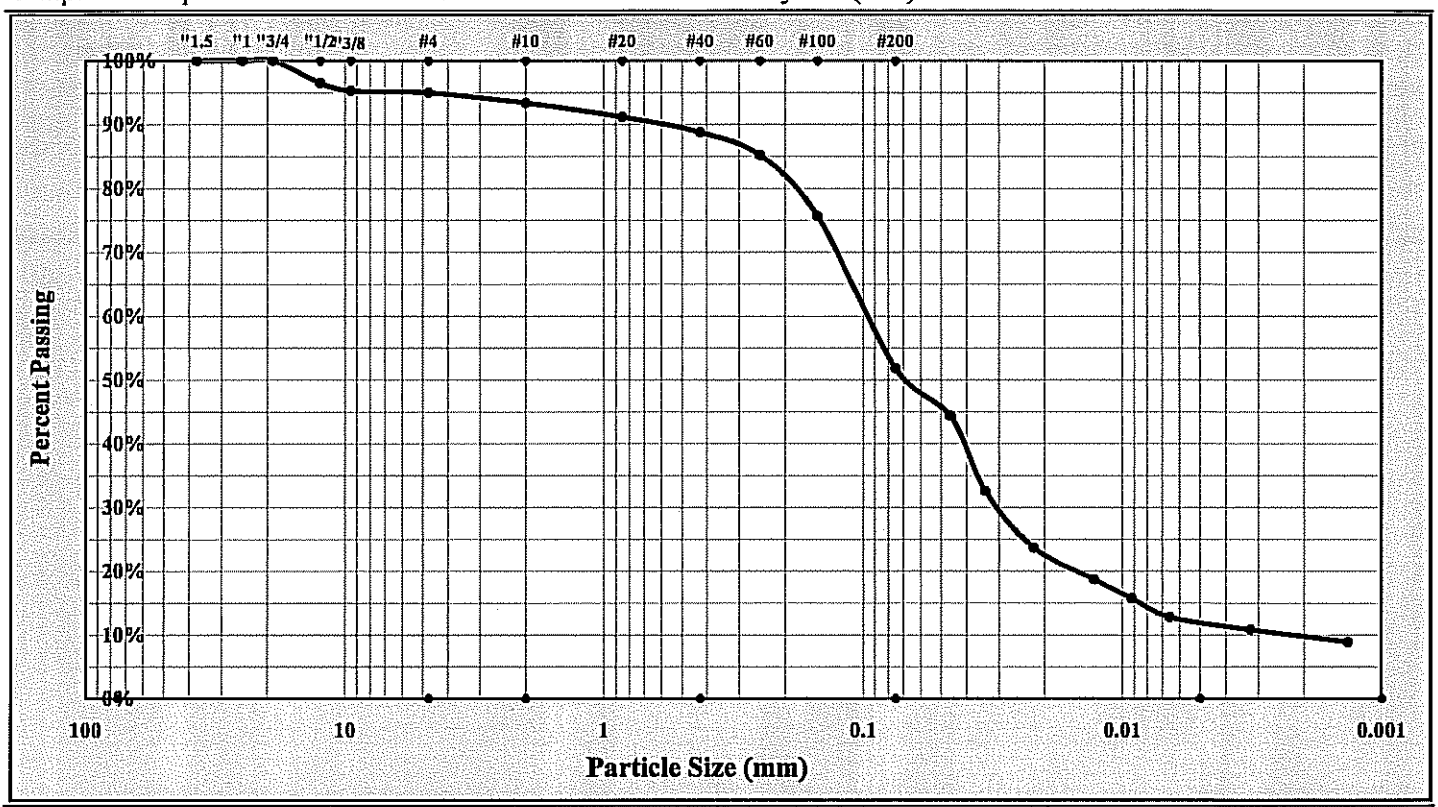

Cobbles	< 300 mm (12") and > 75 mm (3")	Fine Sand	< 0.425 mm and > 0.075 mm (#200)
Gravel	< 75 mm and > 4.75 mm (#4)	Silt	< 0.075 and > 0.005 mm
Coarse Sand	< 4.75 mm and >2.00 mm (#10)	Clay	< 0.005 mm
Medium Sand	< 2.00 mm and > 0.425 mm (#40)	Colloids	< 0.001 mm

Maximum Particle Size:	1/2"	Gravel:	5.0%	Silt	39.8%
Silt & Clay (% Passing #200):	51.8%	Total Sand:	43.2%	Clay	12.0%
ent Relative Density (Assumed)	2.650	Moisture Content	14.3%	Colloids	
Liquid Limit	35	Plastic Limit	32	Plastic Index	3
Coarse Sand:	1.6%	Medium Sand:	4.6%	Fine Sand:	37.0%

Description of Sand and Gravel: Rounded ☐ Angular ☐ Hard & Durable ☐ Soft ☐ Weathered & Friable ☐

Apparatus B: Air Jet Dispersion — Dispersion Period: 1 min. — Dispersing Agent: Sodium Hexametaphosphate: 40 g./ Liter

References / Comments / Deviations: ASTM D 4318, D 854, D 2487

Kyle Baucom	[signature]	Staff Professional	6/28/11
Technical Responsibility	*Signature*	*Position*	*Date*

This report shall not be reproduced, except in full, without the written approval of S&ME, Inc.

Form No. TR-D4318-T89-90
Revision No. 0
Revision Date: 11/20/07

Liquid Limit, Plastic Limit, and Plastic Index

S&ME

Another code *ASTM D 4318* ☒ *AASHTO T 89* ☐ *AASHTO T 90* ☐ ***Quality Assurance***

S&ME, Inc. ~9751 Southern Pine Boulevard,Charlotte, NC 28273

Project #:	~~1357~~ 1356-07-017-05	Report Date:	6/21/11
Project Name:	Pine Hall Road Closure Retrofit	Test Date(s)	6/16-21/11
Client Name:	Duke Energy		
Client Address:	3195 Pine Hall Road, Belews Creek, NC 27009		

Boring #: Sample #: SF-2 Sample Date: 6/16/11

Location: Offset: Elevation:

Sample Description: Brown Tan Coarse to Fine Sandy Silt (ML)

Type and Specification	*S&ME ID #*	*Cal Date:*	*Type and Specification*	*S&ME ID #*	*Cal Date:*
Balance (0.01 g)	3222	6/29/2010	Grooving tool	23359	9/1/2010
LL Apparatus	3611	10/15/2010	Grooving tool		
Oven	10844	3/29/2011	Grooving tool		

Pan #		Liquid Limit						Plastic Limit		
	Tare #:	29	36	P-18				TT	54	
A	Tare Weight	14.12	15.68	12.65				**15.93**	14.08	
B	Wet Soil Weight + A	26.30	24.69	23.92				23.50	21.40	
C	Dry Soil Weight + A	23.17	22.30	20.87				21.66	19.62	
D	Water Weight (B-C)	3.13	2.39	3.05				1.84	1.78	
E	Dry Soil Weight (C-A)	9.05	6.62	8.22				5.73	5.54	
F	% Moisture (D/E)*100	34.6%	36.1%	37.1%				32.1%	32.1%	
N	# OF DROPS	28	21	17				*Moisture Contents determined by ASTM D 2216*		
LL	LL = **F** * FACTOR									
Ave.	*Average*							**32.1%**		

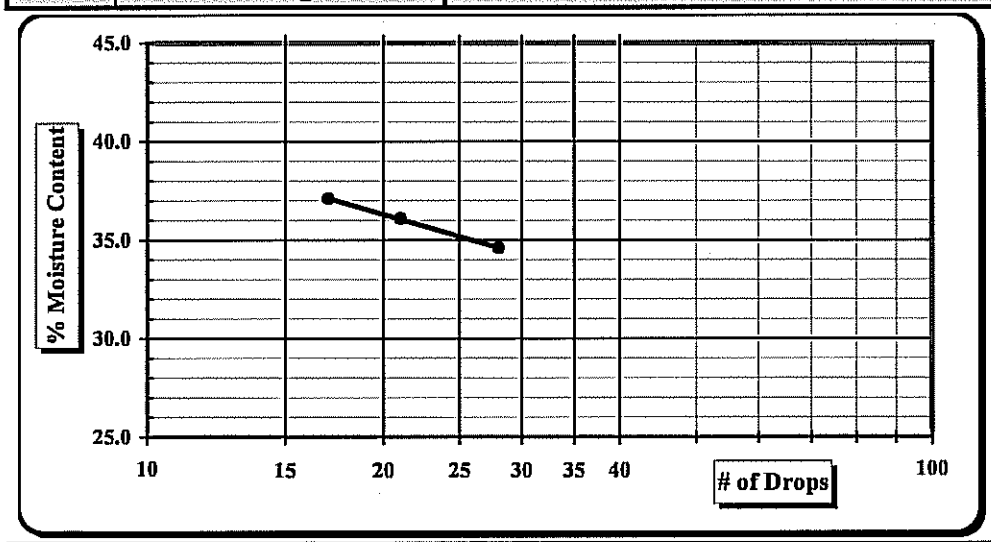

One Point Liquid Limit

N	Factor	N	Factor
20	0.974	26	1.005
21	0.979	27	1.009
22	0.985	28	1.014
23	0.99	29	1.018
24	0.995	30	1.022
25	1.000		

NP, Non-Plastic ☐

Liquid Limit	**35**
Plastic Limit	**32**
Plastic Index	**3**
Group Symbol	**ML**

Multipoint Method ☑
One-point Method ☐

Wet Preparation ☐ Dry Preparation ☑ Air Dried ☑ *Estimate the % Retained on the #40 Sieve:*

Notes / Deviations / References:

ASTM D 4318: Liquid Limit, Plastic Limit, & Plastic Index of Soils

Karen Warner	6/22/11	Kyle Baucom	6/28/11
Technician Name	*Date*	*Technical Responsibility*	*Date*

This report shall not be reproduced, except in full, without the written approval of S&ME, Inc.

Form No: TR-D2216-T265-1
Revision No. 0
Revision Date: 02/22/08

Laboratory Determination of Water Content

S&ME

ASTM D 2216 ☑ *AASHTO T 265* ☐ ***Quality Assurance***

S&ME, Inc. ~ 9751 Southern Pine Boulevard ~ Charlotte, NC 28273

Project #:	~~1357~~ 1356-07-017-05	Report Date:	6/17/11
Project Name:	Pine Hall Road Closure Retrofit	Test Date(s):	6/16-17/11
Client Name:	Duke Energy		
Client Address:			
Sample by:		Sample Date(s):	6/16/11
Sampling Method:		Drill Rig :	

Method: **A (1%)** ☐ **B (0.1%)** ☑ *Balance ID.* ***3222*** *Calibration Date:* ***6/29/10***

Boring No.	Sample No.	Sample Depth	Tare #	Tare Weight	Tare Wt.+ Wet Wt	Tare Wt. + Dry Wt	Water Weight	Percent Moisture	Note
		ft. or m.		grams	grams	grams	grams	%	
NA	SF-1		T-4	81.76	447.81	401.81	46.00	**14.4%**	
NA	SF-2		333	82.91	534.57	478.16	56.41	**14.3%**	

Notes / Deviations / References

ASTM D 2216: Laboratory Determination of Water (Moisture) Content of Soil and Rock by Mass

Karen Warner	Karen Warner	NICET 117900	6/20/11
Technician Name	*Signature*	*Certification Type / No.*	*Date*
Kyle Baucom	Kyle Baucom	Staff Professional	6/23/11
Technical Responsibility	*Signature*	*Position*	*Date*

This report shall not be reproduced, except in full, without the written approval of S&ME, Inc.

Geosynthetics CQA Forms

Geomembrane Deployment Report
Geomembrane Trial Seam Log
Geomembrane Seam Log
Destructive Laboratory Test Results
Geomembrane Defect Log
Geomembrane Repair Testing Log

GEOMEMBRANE DEPLOYMENT REPORT

Material Description
Agru America: 40-mil LLDPE Liner

Date: 7/13/2011
S&ME Project No.: 1356-07-017 Ph. 5
Project Name: Pine Hall Road Closure Retrofit
Project Location: Belews Creek, North Carolina
Page: 1 **of** 1

Panel No.	Roll Number	Length (ft)	Width (ft)	Approximate Area (ft^2)		CQA Initials	Remarks
				Textured	Smooth		
P1	318331	210	20	4,200	0	JHA	
P2	318331	310	14	4,340	0	JHA	
P3	318331	63	4.5	284	0	JHA	
			Sheet Total	8,824	0		
			Total to Date	8,824	0		

CQA Personnel: James Addis

GEOMEMBRANE TRIAL SEAM LOG

S&ME Project No.: 1356-07-017 Ph. 5
Project Name: Pine Hall Road Closure Retrofit
Project Location: Belews Creek, North Carolina
Page: 1 **of** 1

					Machine Settings		Peel Test Results						Shear Test Results							
Sample No.	Approx. Time	Tech. Init.	Mach. No.	Ambient Temp.	Preheat or Speed	Temp. Setting	1		2		3		1	2	3	Pass/ Fail	Weld Type	Material	CQA Init.	Date
1	1325	RC	500	100	9	360	84	81	84	79	85	87	88	85	85	P	F	SS	JHA	7/13/11
2	1330	RC	500	100	9	360	87	80	83	81	78	81	85	87	76	P	F	TT	JHA	7/13/11
3	730	GM	500	84	9	360	74	83	86	79	74	83	88	84	81	P	F	TT	JHA	7/14/11
4	1235	IB	55	90	250	250	68	---	77	---	66	---	71	73	70	P	Ex	TT	JHA	7/14/11

Weld Type: (**Ex**)trusion, (**F**)usion
Material: (**SS**) Smooth/Smooth - (**ST**) Smooth/Texture - (**TT**) Texture /Texture

CQA Personnel: James Addis

GEOMEMBRANE SEAM LOG

Date: 7/13/2011 & 7/14/2011
S&ME Project No.: 1356-07-017 Ph. 5
Project Name: Pine Hall Road Closure Retrofit
Project Location: Belews Creek, North Carolina
Page: 1 of 1

Seam Panels	Seam Start/Finish	Time	Tech. Init.	Mach. No.	Length Welded	Located Destr. Number	Test Type (Air / Vac.)	AIR PRESSURE TEST Time Start/ Finish	AIR PRESSURE TEST Pressure Start/ Finish	AIR PRESSURE TEST Tech. Init.	AIR PRESSURE TEST QC Init.	Pass /Fail	Date	Remarks (ZONE)
P1 / P3	NEOS / SEOS	1357	RC	500	61		A	940 / 945	30 / 30	IB	JHA	P	7/14/2011	Z-1
P1 / P2	WEOS / EEOS	1423	RC	500	13		A	935 / 940	30 / 30	IB	JHA	P	7/14/2011	Z-1
P2 / Ex	NEOS / SEOS	815	GM	500	307		A	1138 / 1143	30 / 30	RC	JHA	P	7/14/2011	Z-1; Z-2: 1235/1240, 32/32, RC; Z-3: 1140/1145, 32/32, RC
P1 / Ex	EEOS / WEOS	950	GM	500	15		A	1140 / 1145	32 / 32	RC	JHA	P	7/14/2011	Z-1
P3 / Ex	NEOS / SEOS	952	GM	500	61		A	1140 / 1145	32 / 32	RC	JHA	P	7/14/2011	Z-1; Z-2: 1133/1138, 32/32, RC
P1 / Ex	NEOS / SEOS	1005	GM	500	147	1	A	1100 / 1105	32 / 32	RC	JHA	P	7/14/2011	Z-1; Z-2: 1133/1138, 32/32, RC
P1 / Ex	WEOS / EEOS	1035	GM	500	8		A	1108 / 1113	32 / 32	RC	JHA	P	7/14/2011	Z-1
P1 / Ex	EEOS / WEOS	1300	IB	55	6		V			RC	JHA	P	7/14/2011	
P2 / Ex	WEOS / EEOS	1400	IB	55	8		V			RC	JHA	P	7/14/2011	

Sheet Total 626
Total to Date 626

CQA Personnel: James Addis

S&ME, Inc. - CHARLOTTE, NC
Laboratory Destructive Test Result Summary

Project Name: Pine Hall Road Closure Retrofit
S&ME Project No.: 1356-07-017 Ph. 5
Material Description: 40-mil Textured LLDPE Liner
Weld Type: Fusion
Sample: P1
Tested by: James Addis
Date Tested: 07/15/2011 Date of Summary: 07/15/2011

SHEAR TESTING (ASTM D-6392)

Specimen No.	Load at Yield (lbs/in)	Failure Description
S1	94.0	Elongation
S2	93.0	Elongation
S3	97.0	Elongation
S4	92.0	Elongation
S5	93.0	Elongation
Average	93.8	*FTB - Film Tear Bond
Standard Deviation	1.7	
Maximum	97.0	
Minimum	92.0	
Pass/Fail [1,2,3]	PASS	

PEEL TESTING (ASTM D-6392)

Specimen No.	Load at Yield (lbs/in)	Failure Description
P1A	87.0	FTB
P1B	85.0	FTB
P2A	88.0	FTB
P2B	85.0	FTB
P3A	92.0	FTB
P3B	86.0	FTB
P4A	87.0	FTB
P4B	89.0	FTB
P5A	79.0	FTB
P5B	85.0	FTB
Average	86.3	*FTB - Film Tear Bond
Standard Deviation	3.2	
Maximum	92.0	
Minimum	79.0	
Pass/Fail [1,2,3]	PASS	

[1] Fusion Weld Passing Values: Shear - 60 lb/in; Peel - 50 lb/in
[2] Extrusion Weld Passing Values: Shear - 60 lb/in; Peel - 44 lb/in
[3] Values are for 4 out of 5 specimens; 5th specimen can be 80% of listed value

GEOMEMBRANE DEFECT LOG

S&ME Project No.: 1356-07-017 Ph. 5
Project Name: Pine Hall Road Closure Retrofit
Project Location: Belews Creek, North Carolina
Page: 1 of 2

Defect Code	Defect Seam or Panel	Location of Defect	Defect Type	Log Date	Remarks	Repair Date	CQA Initial
1	P2/Ext	126' S of NEOS	O	7/14/2011	Burnout	7/14/2011	JHA
2	P2/Ext	232' S of NEOS	O	7/14/2011	Welder out; "gap"	7/14/2011	JHA
3	P3/Ext	31' S of NEOS	O	7/14/2011	Cut for wrinkle	7/14/2011	JHA
4	P1/Ext	30' S of NEOS	LDT	7/14/2011	LDT-1	7/14/2011	JHA
5	P1/Ext	15' N of SEOS	O	7/14/2011	Air test	7/14/2011	JHA
6	P1/Ext	SEOS	O	7/14/2011		7/14/2011	JHA
7	P1/Ext	10' N of SEOS	T	7/14/2011		7/14/2011	JHA
8	P1/Ext	32' N of SEOS	T	7/14/2011		7/14/2011	JHA
9	P1/Ext	54' N of SEOS	T	7/14/2011		7/14/2011	JHA
10	P1/Ext	76' N of SEOS	T	7/14/2011		7/14/2011	JHA
11	P1/Ext	98' N of SEOS	T	7/14/2011		7/14/2011	JHA
12	P1/Ext	120' N of SEOS	T	7/14/2011		7/14/2011	JHA
13	P1/P3/Ext	139' N of SEOS	T	7/14/2011		7/14/2011	JHA
14	P3/Ext	142' N of SEOS	T	7/14/2011		7/14/2011	JHA
15	P3/Ext	186' N of SEOS	T	7/14/2011		7/14/2011	JHA
16	P3/P1	NEOS	T	7/14/2011		7/14/2011	JHA
17	P2/Ext	13' N of SEOS	T	7/14/2011		7/14/2011	JHA
18	P2/Ext	34' N of SEOS	T	7/14/2011		7/14/2011	JHA
19	P2/Ext	56' N of SEOS	T	7/14/2011		7/14/2011	JHA
20	P2/Ext	78' N of SEOS	T	7/14/2011		7/14/2011	JHA
21	P2/Ext	100' N of SEOS	T	7/14/2011		7/14/2011	JHA
22	P2/Ext	122' N of SEOS	T	7/14/2011		7/14/2011	JHA

Location: **NEOS** - north end of seam, **SEOS** - south end of seam, **EEOS** - east end of seam, **WEOS** - west end of seam

Defect Type: **LDT** - Laboratory Destructive Testing, **FDT** - Field Destructive Testing, **T** - T weld, **O** - Other

CQA Personnel : James Addis

GEOMEMBRANE DEFECT LOG

S&ME Project No.: 1356-07-017 Ph. 5
Project Name: Pine Hall Road Closure Retrofit
Project Location: Belews Creek, North Carolina
Page: 2 of 2

Defect Code	Defect Seam or Panel	Location of Defect	Defect Type	Log Date	Remarks	Repair Date	CQA Initial
23	P2/Ext	144' N of SEOS	T	7/14/2011		7/14/2011	JHA
24	P2/Ext	166' N of SEOS	T	7/14/2011		7/14/2011	JHA
25	P2/Ext	188' N of SEOS	T	7/14/2011		7/14/2011	JHA
26	P2/Ext	210' N of SEOS	T	7/14/2011		7/14/2011	JHA
27	P2/Ext	232' N of SEOS	T	7/14/2011		7/14/2011	JHA
28	P2/Ext	254' N of SEOS	T	7/14/2011		7/14/2011	JHA
29	P2/Ext	276' N of SEOS	T	7/14/2011		7/14/2011	JHA
30	P2/Ext	NEOS	O	7/14/2011		7/14/2011	JHA
31	P1/P2	WEOS	T	7/14/2011		7/14/2011	JHA

Location: **NEOS** - north end of seam, **SEOS** - south end of seam, **EEOS** - east end of seam, **WEOS** - west end of seam
Defect Type: **LDT** - Laboratory Destructive Testing, **FDT** - Field Destructive Testing, **T** - T weld, **O** - Other

CQA Personnel : James Addis

GEOMEMBRANE REPAIR TESTING LOG

S&ME Project No.: 1356-07-017 Ph. 5
Project Name: Pine Hall Road Closure Retrofit
Project Location: Belews Creek, North Carolina
Page: 1 of 2

Defect Code	Repair Type	Approximate Dimensions	Tech. Initials	CQA Initials	Date	Test Type	Tech. Initials	CQA Initials	Pass / Fail	Date	Remarks
1	P	2' x 2'	IB	JHA	7/14/2011	VB	RC	JHA	Pass	7/14/2011	
2	P	11' x 1.5'	IB	JHA	7/14/2011	VB	RC	JHA	Pass	7/14/2011	
3	P	3.5' x 3'	IB	JHA	7/14/2011	VB	RC	JHA	Pass	7/14/2011	
4	P	6' x 2'	IB	JHA	7/14/2011	VB	RC	JHA	Pass	7/14/2011	
5	P	2.5' x 2'	IB	JHA	7/14/2011	VB	RC	JHA	Pass	7/14/2011	
6	P	3' x 1.5'	IB	JHA	7/14/2011	VB	RC	JHA	Pass	7/14/2011	
7	G&W	6" x 8"	IB	JHA	7/14/2011	VB	RC	JHA	Pass	7/14/2011	
8	G&W	6" x 8"	IB	JHA	7/14/2011	VB	RC	JHA	Pass	7/14/2011	
9	G&W	6" x 8"	IB	JHA	7/14/2011	VB	RC	JHA	Pass	7/14/2011	
10	G&W	5" x 7"	IB	JHA	7/14/2011	VB	RC	JHA	Pass	7/14/2011	
11	G&W	5" x 7"	IB	JHA	7/14/2011	VB	RC	JHA	Pass	7/14/2011	
12	G&W	6" x 6"	IB	JHA	7/14/2011	VB	RC	JHA	Pass	7/14/2011	
13	G&W	14" x 8"	IB	JHA	7/14/2011	VB	RC	JHA	Pass	7/14/2011	
14	G&W	4" x 6"	IB	JHA	7/14/2011	VB	RC	JHA	Pass	7/14/2011	
15	G&W	6" x 8"	IB	JHA	7/14/2011	VB	RC	JHA	Pass	7/14/2011	
16	G&W	4" x 8"	IB	JHA	7/14/2011	VB	RC	JHA	Pass	7/14/2011	
17	G&W	4" x 6"	IB	JHA	7/14/2011	VB	RC	JHA	Pass	7/14/2011	
18	G&W	4" x 6"	IB	JHA	7/14/2011	VB	RC	JHA	Pass	7/14/2011	
19	G&W	4" x 7"	IB	JHA	7/14/2011	VB	RC	JHA	Pass	7/14/2011	
20	G&W	6" x 8"	IB	JHA	7/14/2011	VB	RC	JHA	Pass	7/14/2011	
21	G&W	6" x 8"	IB	JHA	7/14/2011	VB	RC	JHA	Pass	7/14/2011	
22	G&W	6" x 8"	IB	JHA	7/14/2011	VB	RC	JHA	Pass	7/14/2011	

Repair Type: **G&W** - Grind and Weld, **P**- Patch, **CAP** - Cap Strip

Testing Type: **SP** - Spark Test, **VB** - Vacuum Box Test

CQA Personnel: James Addis

GEOMEMBRANE REPAIR TESTING LOG

S&ME Project No.: 1356-07-017 Ph. 5
Project Name: Pine Hall Road Closure Retrofit
Project Location: Belews Creek, North Carolina
Page: 2 of 2

Defect Code	Repair Type	Approximate Dimensions	Tech. Initials	CQA Initials	Date	Test Type	Tech. Initials	CQA Initials	Pass / Fail	Date	Remarks
23	G&W	4" x 8"	IB	JHA	7/14/2011	VB	RC	JHA	Pass	7/14/2011	
24	G&W	6" x 6"	IB	JHA	7/14/2011	VB	RC	JHA	Pass	7/14/2011	
25	G&W	6" x 8"	IB	JHA	7/14/2011	VB	RC	JHA	Pass	7/14/2011	
26	G&W	6" x 8"	IB	JHA	7/14/2011	VB	RC	JHA	Pass	7/14/2011	
27	G&W	5" x 7"	IB	JHA	7/14/2011	VB	RC	JHA	Pass	7/14/2011	
28	G&W	5" x 7"	IB	JHA	7/14/2011	VB	RC	JHA	Pass	7/14/2011	
29	G&W	5" x 7"	IB	JHA	7/14/2011	VB	RC	JHA	Pass	7/14/2011	
30	P	2' x 2'	IB	JHA	7/14/2011	VB	RC	JHA	Pass	7/14/2011	
31	G&W	6" x 8"	IB	JHA	7/14/2011	VB	RC	JHA	Pass	7/14/2011	

Repair Type: **G&W** - Grind and Weld, **P**- Patch, **CAP** - Cap Strip

Testing Type: **SP** - Spark Test, **VB** - Vacuum Box Test

CQA Personnel: James Addis

S&ME

SUBGRADE CERTIFICATION

Date: July 13, 2011

Material: Microspike 40mil LLDPE

S&ME Project No.: 1356-07-017-05

Manufacurer: Agru America

Project Name: PHR Ash LF Closure-Cover System Retrofit

Installer: PFF

Project Location: Belews Creek NC.

P- 1 through P- 3

THE SUBGRADE THAT THE ABOVE LISTED PANELS ARE TO BE DEPLOYED UPON WAS INSPECTED AND DETERMINED TO BE SUITABLE IN ACCORDANCE WITH THE PROJECT SPECIFICATIONS.

IF THE SUBGRADE IS NOT SUITABLE, STATE REASONS:

CORRECTIVE ACTION:

Date Corrective Action was Implemented:

Date Subgrade was Accepted by Installer: 7-13-2011

Al Carlito

Installer's Personnel

Jimmy Adelia

CQA Personnel