Scanned by	Date	Doc ID #
M. CHAO	7/7/08	5087

McGill
ASSOCIATES

RECEIVED

JUL 1 2008

SOLID WASTE SECTION
ASHEVILLE REGIONAL OFFICE

June 30, 2008

Mr. Ming-Tai Chao, P.E.
Solid Waste Permitting Section
Division of Waste Management
North Carolina Department of Environment and Natural Resources
1646 Mail Service Center
Raleigh, North Carolina 27699-1646

RE: Closure Plan
Highlands Construction & Demolition Landfill
Macon County, North Carolina
Permit # 57-04

Dear Mr. Chao:

On behalf of Macon County, McGill Associates is pleased to present this notification of Closure of their Construction & Demolition Landfill (C&DLF) in Highlands, North Carolina. The Highlands C&DLF will receive its last waste on June 30, 2008. Beyond June 30, 2008, Construction and demolition wastes will be transferred through the new on-site solid waste transfer station to the Macon County MSW landfill in Franklin. Enclosed is the Closure and Post-Closure Plan (1 hard copy and 1 electronic copy) for the Highlands C&DLF.

We look forward to working with you in order to obtain Closure Status for the Highlands C&DLF. Please let us know if you have any questions regarding this submittal or if you require additional information.

Sincerely,
McGILL ASSOCIATES, P.A.

Jeff R. Bishop

JEFFREY R. BISHOP, P.E.
Senior Project Manager

Enclosures
cc: Allen Gaither, NCDENR Solid Waste Section, w/1 copy of enc
Ed Mussler, NCDENR Solid Waste Section, w/o enc
Chris Stahl, Macon County Director of Solid Waste, w/1 copy of enc

P:/08.00703/letters/mc30jun08-Highlands-CD-Closure.doc

CLOSURE/POST-CLOSURE PLAN

Highlands Construction & Demolition Landfill
Macon County, North Carolina

JEFFREY R. BISHOP, P.E.

McGill ASSOCIATES

Engineering • Planning • Finance
Asheville, North Carolina

NORTH CAROLINA PROFESSIONAL SEAL 23574 ENGINEER JEFFREY R. BISHOP 6/30/08

JUNE 2008

08.00703

CLOSURE AND POST-CLOSURE PLAN

Highlands Construction & Demolition Landfill

Macon County, North Carolina

Chapter 1
Overview

Macon County has elected to close the current Highlands Construction / Demolition Waste (CDLF). The Solid Waste Section was notified on March 31, 2008 of the county's intention to close the CDLF. In addition, a letter was sent to Larry Frost on June 30, 2008 to describe the proposed operation. A copy is included in Appendix 1.

The County will not dispose of any waste at the currently permitted CDLF beyond June 30, 2008. Following June 30, 2008, all construction / demolition waste will be transferred through the County's on-site transfer station to the Macon County MSW Landfill in Franklin.

1.1 Final Cover

The final cover system will be a total of 24-inches thick of suitable compacted soil in accordance with Section 0.505 of the Solid Waste Rules. A detail of the final cap is shown on Sheet D1 of the closure plan drawings. The final cap system for the waste area will be constructed following the discontinuation of acceptance of waste. The cap system will be constructed in order to minimize infiltration of stormwater, control erosion, and establish and maintain a vegetated cap. The CDLF waste limit covers a total area of approximately 6.1 acres.

1.3a - Materials Required

A grass cover is proposed for the landfill to provide the required cover while minimizing cap maintenance. The surface will be prepared by fertilizing and placing seed in accordance with the North Carolina Erosion and Sediment Control Standards. The final cover will be constructed of native soils. Although the material will not be required to have a specific classification or permeability, it should be a cohesive soil capable of supporting native vegetation.

i. Fertilizer:

The final cover material shall be tested prior to spreading to determine the amount of fertilizer that should be added to achieve optimum growth potential of the required vegetative cover.

The quality of fertilizer and all operations in connection with the furnishing of this material shall comply with the requirements of the North Carolina Fertilizer Law and regulations adopted by the North Carolina Board of Agriculture.

Fertilizer shall be 10-10-10 grade. Upon written approval of the Engineer a different grade of fertilizer may be used, provided the rate of application is adjusted to provide the same amounts of plant food.

During handling and storing, the fertilizer shall be cared for in such a manner that it will be protected against hardening, caking, or loss of plant food values. Any hardened or caked fertilizer shall be pulverized to its original conditions before being used.

ii. Limestone

The final cover material shall be tested prior to spreading to determine the amount of limestone that should be added to achieve optimum growth potential of the required vegetative cover.

The quality of limestone and all operations in connection with the furnishing of this material shall comply with the requirements of the North Carolina Lime Law and regulations adopted by the North Carolina Board of Agriculture.

During the handling and storing, the lime shall be cared for in such a manner that it will be protected against hardening and caking. Any hardened or caked lime shall be pulverized to its original condition before being used.

Lime shall be agriculture grade ground dolumitic limestone. It shall contain not less than 85% of the calcium and magnesium carbonates and shall be of such fineness that at least 90% will pass a No. 10 sieve and at least 50% will pass a No. 100 sieve.

iii. Seed:

The quality of seed and all operations in connection with the furnishing of this material shall comply with the requirements of the North Carolina Seed Law and regulations adopted by the North Carolina Board of Agriculture.

Seed shall have been approved by the North Carolina Department of Agriculture or any agency approved by the Engineer before being sown, and no seed will be accepted with a date of test more than nine (9) months prior to the date of sowing. Such testing however, will not relieve the Contractor from responsibility for furnishing and sowing seed that meets these specifications at the time of sowing. When a low percentage of germination causes the quality of the seed to fall below the minimum pure live seed specified, the Contractor may elect, subject to the approval of the Engineer, to increase the rate of seeding sufficiently to obtain the minimum pure live seed contents specified, provided that such an increase in seeding does not cause the quantity of noxious weed seed per square yard to exceed the quantity that would be allowable at the regular rate of seed.

During handling and storing, the seed shall be cared for in such a manner that it will be protected from damage by heat, moisture, rodents, or other causes.

Seed shall be entirely free from bulblets or seed of Johnson Grass, Nutgrass, Sandbur, Wild Onion, Wild Garlic, and Bermuda Grass. The specifications for restricted noxious weed seed refers to the number per pound, singly or collectively, of Blessed Thistle, Wild Radish, Canada Thistle, Corncockle, Field Bindwee, Quackgrass, Dodders, Dock, Horsenettle, Bracted Plantain, Buckhorn or Wild Mustard; but in no case shall the number of Blessed Thistle or Wild Radish exceed 27 seeds of each per pound. No tolerance on weed seed will be allowed.

iv. Mulch:

Straw mulch shall be threshed straw of oats, rye or wheat free from matured seed of obnoxious weeds or other species which would grow and be detrimental to the specified grass.

1.3b - Construction Requirements

Final cover shall be placed according to the following requirements:

i. The final 6 inches of final cover shall be spread by utilizing small equipment with a relatively low ground pressure. This will reduce the potential of the underlying layers of the final cap being damaged. Prior to placing final soil layer, shape the underlying soil layer to graded lines and cross sections to provide for 6 inches of vegetative supportive soil. Clear the underlying soil layer of materials larger than 2" in diameter.

ii. After alignment of the underlying soil, loosen and till to a depth of 6 inches by disking, harrowing, rototilling, or other approved methods to assure that the final soil layer properly adheres to the underlying soil layer.

iii. After the condition of the underlying soil layer has been approved by the on-site CQA personnel, place and spread final layer to achieve required depth after compaction; rake and remove materials larger than 2 inches. Compact with approved roller equipment, grade to finished tolerances, and prepare the seedbed.

Seed, fertilizer and lime shall be applied according to the following:

Seed shall be applied by means of a hydro-seeder or other approved methods. The rates of application of seed, fertilizer and limestone shall be as stated below, unless pre-construction testing is contrary to these rates and can be documented.

All rates are in pounds per acre:

Fertilizer - 1000 lbs. per acre
Lime - 4,000 lbs. per acre
KY-31 Fescue - 100 lbs. per acre
Straw mulch – 60 to 80 bales

For summer seeding the following shall be added:

- German Millet - 10 lbs. per acre
- Sudangrass – 15 lbs. per acre

For winter seeding the following shall be added:

- Rye grain – 15 lbs. per acre

For steep slopes the following shall be added:

- Sericea Lespedeza – 40 lbs. per acre

Equipment to be used for the application, covering or compaction of limestone, fertilizer, and seed shall have been approved by the Engineer before being used on the project. Approval may be revoked at any time if equipment is not maintained in satisfactory working condition, or if the equipment operation damages the seed. Limestone, fertilizer, and seed shall be applied within 24 hours after completion of seedbed preparation unless otherwise permitted by the Engineer, but no limestone or fertilizer shall be distributed and no seed shall be sown when the Engineer determines that weather and soil conditions are unfavorable for such operations.

Limestone may be applied as a part of the seedbed preparation, provided it is immediately worked into the soil. If not so applied, limestone and fertilizer shall be distributed uniformly over the prepared seedbed at the specific rate of application and then harrowed, raked, or otherwise thoroughly worked or mixed into the seedbed.

Seed shall be distributed uniformly over the seedbed at the required rate of application, and immediately harrowed, dragged, raked, or otherwise worked so as to cover the seed with a layer of soil. The depth of covering shall be as directed by the Engineer. If two kinds of seed are to be used which require different depths of covering, they shall be sown separately.

When a hydraulic seeder is used for application of seed and fertilizer, the seed shall not remain in water containing fertilizer for more than 30 minutes prior to application unless otherwise permitted by the Engineer.

Immediately after seed has been properly covered the seedbed shall be compacted in the manner and degree approved by the Engineer.

Mulch shall be applied according to the following:

It shall be spread uniformly at the rate given above and in a continuous blanket over the areas specified.

Before mulch is applied on cut or fill slopes which are 3:1 or flatter, and ditch slopes, the Contractor shall remove and dispose of all exposed stones in excess of 2 inches in diameter and all roots or other debris which will prevent proper contact of the mulch with the soil.

Mulch shall be applied within 24 hours after the completion of the seeding unless otherwise permitted by the Engineer. Care shall be exercised to prevent displacement of soil or seed or other damage to the seeded area during the mulching operations.

Mulch shall be uniformly spread by hand or by approved mechanical spreaders or blowers that will provide an acceptable application. An acceptable application will be that which will allow some sunlight to penetrate and air to circulate but also partially shade the ground, reduce erosion, and conserve soil moisture.

Mulch shall be held in place by applying a sufficient amount of approved binding material to assure that the mulch is properly held in place. The rate and method of application of binding material shall meet the approval of the Engineer. Where the binding material is not applied directly with the mulch, it shall be applied immediately following the mulch operation.

The Contractor shall take sufficient precautions to prevent mulch from entering drainage structures through displacement by wind, water, or other causes and shall promptly remove any blockage to drainage facilities that may occur.

1.3c - Construction Quality Assurance Requirements

Macon County will ensure that the materials described above are utilized for the final cover and that their placement is done in accordance with the above detailed Construction Requirements. The project engineer will ensure that the materials and methods described above are utilized to construct the final cover system, and that all requirements of the approved Closure Plan are achieved.

On June 18, 2008, a pre-construction field topographic survey was conducted by McGill Associates to document the current grades of the landfill. Following placement of the proposed final cap, a post-construction survey will be conducted. In order to verify the thickness of the constructed final cap, the pre-construction and post-construction topographic surveys will then be compared to verify that the full thickness final cap was completed. If it is determined that areas of cap do not meet the minimum thickness requirements, additional soil material will be placed to achieve the proper thickness.

Chapter 2
On-Site Inventory

Macon County began operation at the Highlands Construction/ Demolition Landfill in 1992. Based on scale records and projecting for the month of June 2008, there will be approximately 100,600 tons of construction/ demolition waste in the CDLF waste area at the time of closure.

Chapter 3
Closure Schedule

3.1 Notification of Division of Solid Waste

When the disposal site has been closed Macon County will notify in writing that the landfill has been closed in accordance with Rule .0505. The Solid Waste Section was notified on March 31, 2008 of the county's intention to close the CDLF.

3.2 Begin Closure

Macon County will begin closure activities no later than 30 days after the date on which the CDLF unit receives the known final receipt of wastes unless an extension has been granted by the Division. Extensions beyond the deadline for beginning closure may be granted by the Division if the owner or operator demonstrates that the portion of the CDLF unit has the capacity to receive additional wastes and the owner or operator has taken and will continue to take all steps necessary to prevent threats to human health and the environment from the unclosed CDLF unit.

3.3 Completion of Closure

Macon County will complete closure activities of the CDLF in accordance with the closure plan within 180 days following the beginning of closure. Extensions of the closure period may be granted by the Division if the owner or operator demonstrates that closure will, of necessity, take longer than 180 days and they have taken and will continue to take all steps to prevent threats to human health and the environment from the unclosed CDLF unit.

3.4 Engineer's Certification

Following closure, Macon County shall notify the Division of Solid Waste that a certification, signed by the project engineer verifying that closure has been completed in accordance with the closure plan, has been placed in the operating record.

Chapter 4
Post Closure Plan

4.1 Inspections

Inspections of the final cover will be performed according to the table below and the condition of the facility will be recorded with notes, maps, and photographs. Macon County personnel will be on-site to perform inspections on a frequent basis.

The inspection will take notice of:

1. Eroded banks
2. Patches of dead vegetation
3. Animal burrows
4. Subsidence (settlement)
5. Cracks along the cover
6. Stormwater control facilities
7. Ground water monitoring wells

Areas showing subsidence, cracking, signs of erosion, or damage are to be repaired.

Schedule of Inspections

Years (Following closure)	Minimum Yearly Inspections
0-2	4
2-30	2

4.2 Maintenance

The vegetative cover will be trimmed at least two times a year. In the early stages of development, fertilization will be applied annually as needed.

Seeding of any patches of dead vegetation, proper filling and compaction of any portion of the cap showing subsidence, cracking, or other signs of erosion.

Proper repair of any potential erosion problems found to be present during inspection of catch basins, piping, pipe inlets and outlets, and other stormwater control facilities.

4.3 Site Contact

The person to contact regarding the facility during the Post-Closure period is:

Mr. Michael Chris Stahl, Director
Solid Waste Management
Macon County
109 Sierra Drive
Franklin, North Carolina 28734
(828) 349-2100

4.4 Water Quality Monitoring Plan

The Water Quality Monitoring Plan for the Construction and Demolition Landfill was performed by Cranston, Robertson and Whitehurst. This includes discussion of the existing monitoring system, proposed monitoring system, additional well construction, water level monitoring, aquifer testing, and groundwater sampling and analysis. This plan will be continued throughout the closure period unless the permit is amended through the Division of Solid Waste.

4.5 Engineer's Certification

Following completion of the post-closure care period, Macon County shall notify the Division of Solid Waste that a certification, signed by the project engineer verifying that post-closure care has been completed in accordance with this post-closure plan, has been placed in the operating record.

Chapter 5
Cost Estimates

5.1 Closure Cost Estimate

			Unit Cost	Total
Item 1		Earthwork		
	a.	30,000 C.Y. 24" Final Cover	$6.00 /C.Y.	$180,000.00
Item 2		Sedimentation and Erosion Control		
	a.	8 AC. Grassing	$2,500 /A.C.	$ 20,000.00
	b.	100 Tons Rip Rap	$60 /Tons	$ 6,000.00
	c.	600 L.F. Synthetic Lined Channels	$20 /L.F.	$ 12,000.00
Item 3		Engineering		
	a.	Design		$15,000.00
	b.	Construction Quality Assurance		$ 9,700.00
Item 4		Contingency (10%)		$ 5,600.00
			Total	$86,300.00

5.2 Post-Closure Cost Estimate

				Unit Cost	Total
Item 1		Environmental Monitoring			
	a.	3 Wells Groundwater Monitoring (2 sampling events/year)		$2,000/Well	$ 6,000.00
	b.	1 Points Surface Water Monitoring		$2,000 /Point	$ 2,000.00
Item 2		Routine Annual Maintenance			
	a.	8 AC.	Grass Mowing (2 cuts/year)	$60 /AC.	$ 480.00
	b.	1 Each	Repair of Cap (0.5 acre @ 1foot depth)	$5,000/Each	$ 5,000.00
	c.	1 AC.	Reseeding	$1,500 AC.	$ 1,500.00
Item 3					
	a.	Miscellaneous			$ 2,000.00
	b.	Administration			$ 2,000.00
	c.	Inspection			$ 2,000.00
Item 4		Contingency (10%)			$ 2,100.00
			Total Annual Post-Closure Care		$23,080.00
			Total Post-Closure Care Period (30 years)		$ 692,400

Appendix 1

Macon County Department of Solid Waste Management

109 Sierra Drive, Franklin, North Carolina 28734
Phone: (828) 349-2100; Fax: (828) 349-2185
Email: cstahl@maconnc.org

June 27, 2008

Mr. Larry Frost
Environmental Engineer
NC DENR – SW Permitting Branch
Asheville Regional Office
2090 US Highway 70
Swannanoa, NC 28778

Mr. Frost:

This letter serves to notify the Solid Waste Section of operational changes at the Highlands Construction and Demolition and Macon County MSW Landfills in Macon County. McGill Associates submitted a letter to the Section in March, 2008 expressing our decision to close the Highlands C&D Landfill (Permit #57-04) on June 30, 2008. Macon County is in the process of constructing a transfer station (Permit #57-04T; Issued 12-7-2007) at the facility for MSW and C&D wastes. These commingled wastes will be disposed of in the Macon County MSW Landfill (Permit #57-03). We expect completion of the transfer station in late summer or early fall of 2008. In the interim; commercial C&D wastes generated within Macon County will be transported directly to the MSW Landfill by the generator or contracted hauler. The Highlands facility will remain open for household and commercial MSW wastes that will be collected in 40-yard open-top containers and delivered to the MSW landfill. Small private loads of C&D material may also be allowed so long as the waste can be hand off-loaded into the containers, and so long as the volume of waste does not hamper our ability to maintain disposal capacity at the current operating level.

McGill Associates, on behalf of Macon County, is continuing to work on permitting issues with regards to this transition. A closure plan for the Highlands C&D Landfill, and official notification of a significant waste disposal volume change for the MSW Landfill will be forthcoming.

I appreciate your attention to this matter and look forward to continuing to work with the Solid Waste Section to provide solid waste services to the citizens of Macon County. If you have any questions, or require additional information, please contact myself or Jeff Bishop with McGill Associates (828-252-0575) at your convenience.

Sincerely

Michael Chris Stahl
Macon County Director of Solid Waste Management

CC: Jack Horton – Macon County Manager
Jeff Bishop – McGill Associates
Troy Harrison – NC DENR
Ed Mussler – NC DENR Permitting Branch Head

CLOSURE PLAN
HIGHLANDS CONSTRUCTION & DEMOLITION LANDFILL

MACON COUNTY

MACON COUNTY, NORTH CAROLINA

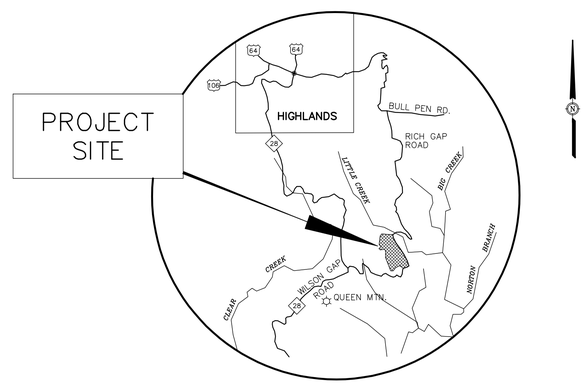

LOCATION MAP NOT TO SCALE

McGill ASSOCIATES
ENGINEERING·PLANNING·FINANCE
55 BROAD STREET ASHEVILLE, NC PH. (828) 252-0575

NORTH CAROLINA PROFESSIONAL SEAL 23574 ENGINEER JEFFREY R. BISHOP 6-23-16

SCHEDULE OF DRAWINGS

G1. . . . COVER SHEET & PROJECT VICINITY MAP
C1. . . . CLOSURE PLAN
D1. . . . DETAILS

PLAN SCALE
1" = 50'

NOTES:
1. ADD FILL DIRT AS SHOWN ON CLOSURE PLAN, MINIMUM 2'.
2. DASHED CONTOURS SHOWN ARE EXISTING CONTOURS ON JUNE 18, 2008.
3. SOLID CONTOURS SHOWN WITHIN WASTE LIMITS REPRESENT PROPOSED FINAL CAP GRADES.

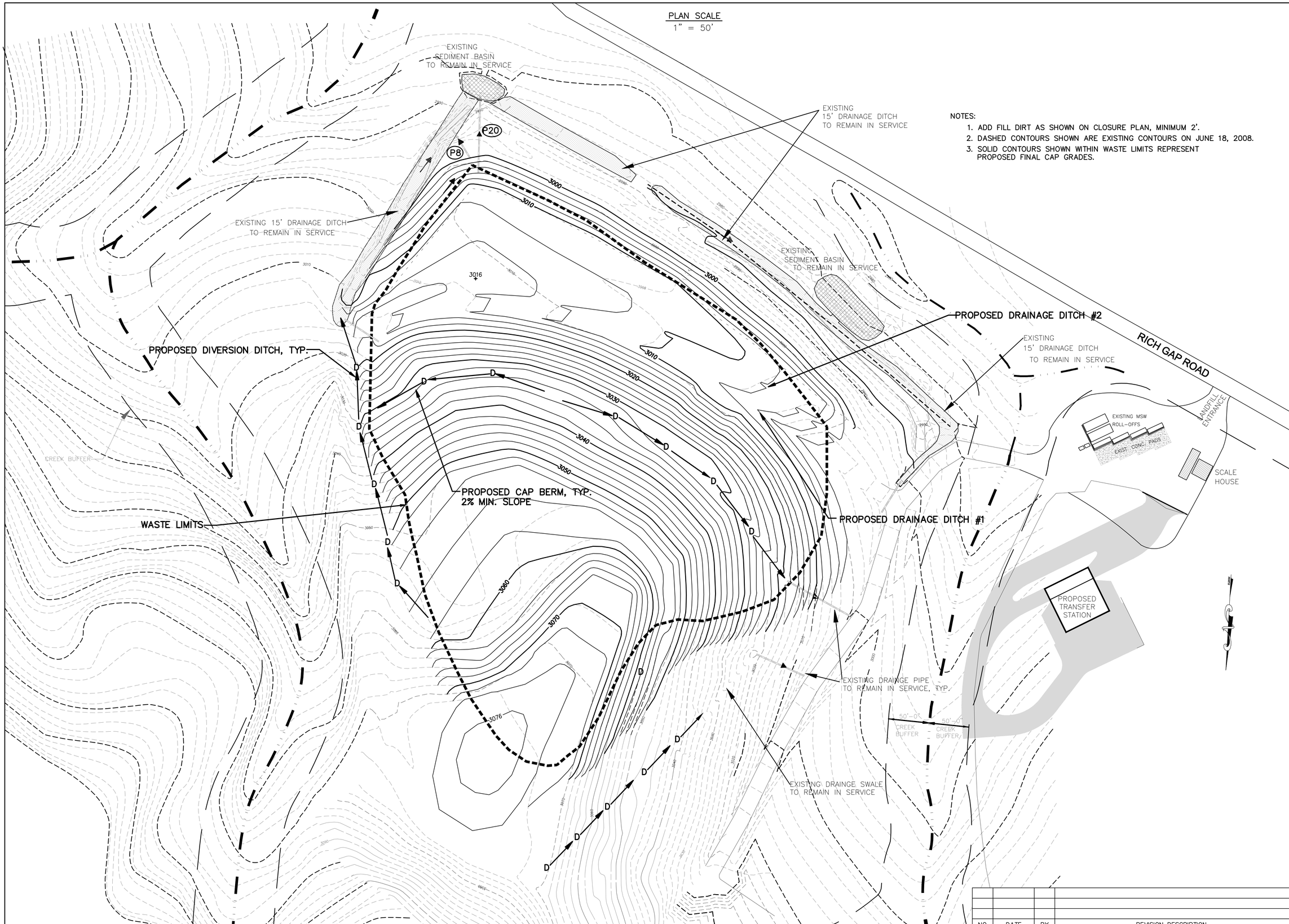

NO.	DATE	BY	REVISION DESCRIPTION

McGill ASSOCIATES
ENGINEERING, PLANNING, FINANCE

CLOSURE PLAN
HIGHLANDS CONSTRUCTION &
DEMOLITION LANDFILL
MACON COUNTY

JOB NO.: 08.00703
DATE: JUNE 2008
SCALE: 1" = 50'
DESIGNED BY: DAP
CADD BY: DAP
DESIGN REVIEW: ------
CONST. REVIEW: ------

CLOSURE PLAN

SHEET
C1

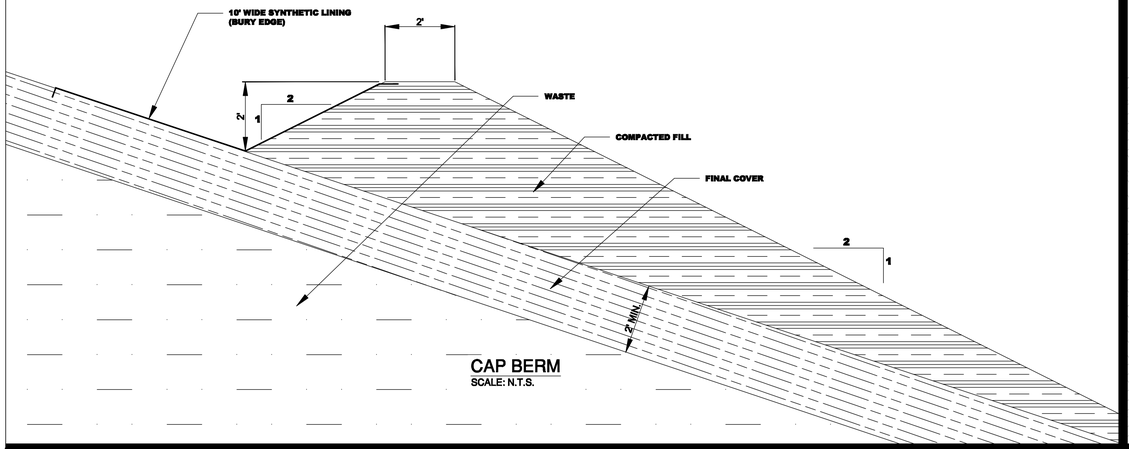

CAP BERM
SCALE: N.T.S.

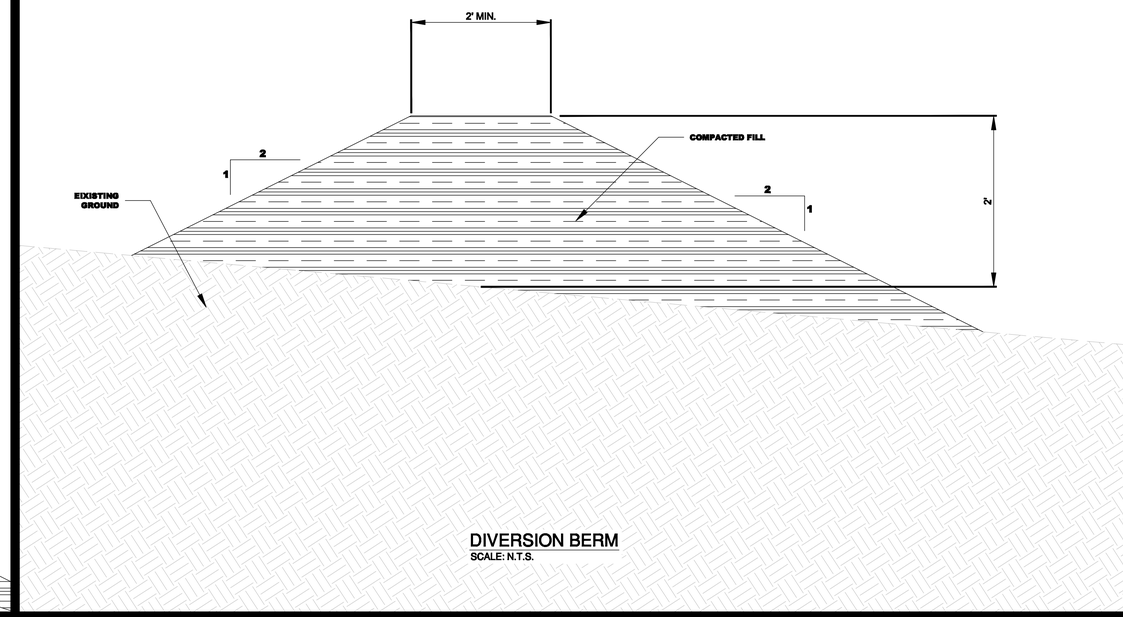

DIVERSION BERM
SCALE: N.T.S.

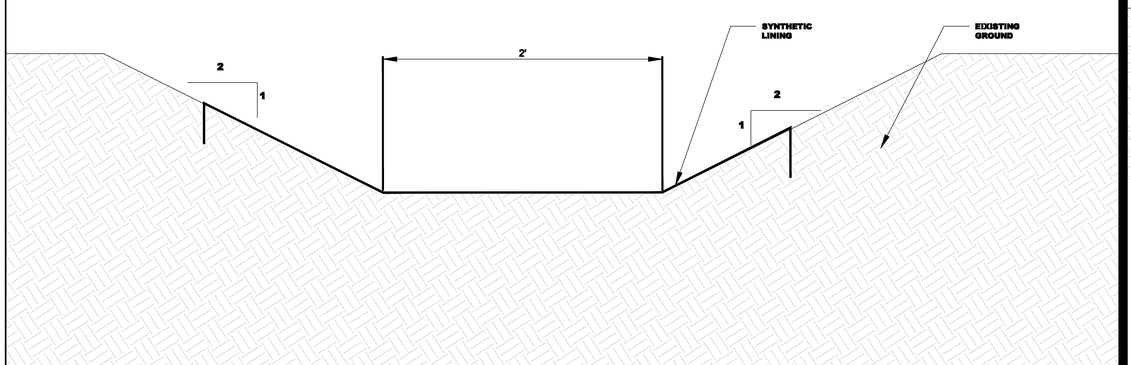

DRAINAGE DITCH #1
SCALE: N.T.S.

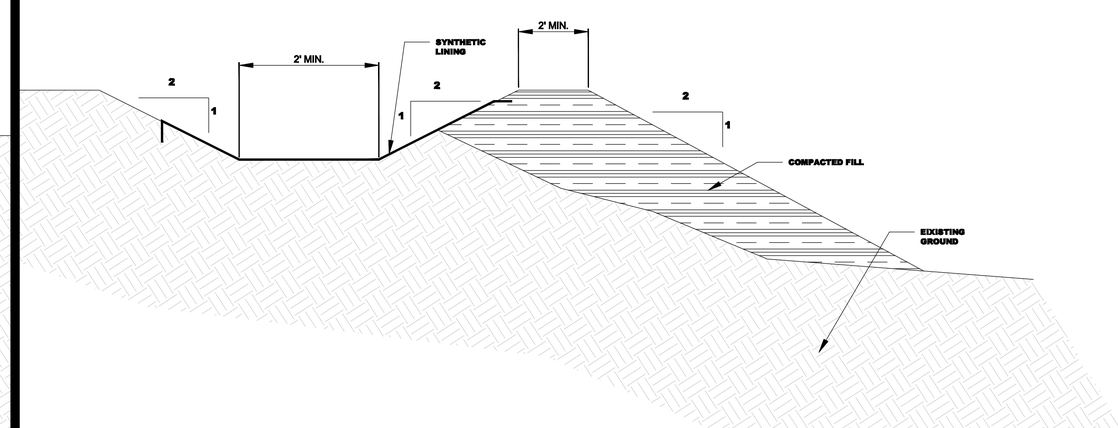

DRAINAGE DITCH #2
SCALE: N.T.S.

NO.	DATE	BY	REVISION DESCRIPTION

McGill ASSOCIATES
ENGINEERING·PLANNING·FINANCE
55 BROAD STREET ASHEVILLE, NC PH. (828) 252-0575

CLOSURE PLAN
HIGHLANDS CONSTRUCTION &
DEMOLITION LANDFILL
MACON COUNTY
MACON COUNTY, NORTH CAROLINA

JOB NO.: 08.00701
DATE: JUNE 2008
SCALE: N.T.S.
DESIGNED BY: JPH
CADD BY: JPH
DESIGN REVIEW: ------
CONST. REVIEW: ------

DETAILS

SHEET
D1