Environmental Consultants
and Contractors

SCS Engineers, P.C.
2520 Whitehall Park Drive
Suite 450
Charlotte, NC 28273-3557

704 504-3107
FAX 704 504-3174
www.scsengineers.com

SCS ENGINEERS, PC

| Permit No. | Date | Document ID No. |
|---|---|---|
| **51-03** | **December 1, 2010** | **12322** |

November 30, 2010
File No. 02210301.00

RECEIVED
**December 1, 2010 via an e-mail**
Solid Waste Section
Raleigh Central Office

Mr. Ming Chao
North Carolina Department of Environment and Natural Resources
Division of Solid Waste
410 Oberlin Rd
Raleigh, North Carolina 27605

Subject: Solid Waste Permit Modification
Landfill Gas Collection and Control System
Johnston County MSW and C&D Landfill Facility
SW Permit #51-03
Smithfield, North Carolina

Dear Mr. Chao:

On behalf of Johnston County MSW and C&D Landfill Facility (Landfill), SCS Engineers, PC (SCS) is submitting an application for a permit modification to SW Permit #51-03. The permit modification is for the installation of a voluntary landfill gas collection and control system (GCCS) at the Landfill. The primary purpose of the voluntary GCCS is to collect and control landfill gas (LFG). Johnston County has entered into an agreement with Blue Source to sell the greenhouse gas credits and to produce electricity from the LFG.

## INTRODUCTION AND BACKGROUND

The Johnston County MSW and C&D Landfill Facility (Landfill) is located near Smithfield, North Carolina. A Request for Proposal for a Landfill Gas to Energy Project at the Johnston County Landfill was issued by the Johnston County Department of Utilities. The Development Team of Blue Source and SCS Engineers proposes to develop a landfill gas collection and control system and a beneficial use project for the LFG at the Landfill. The Development Team will finance, design, permit, build, commission, own, operate, and maintain the GCCS and plans to implement a Landfill Gas Energy system

The Landfill includes several waste disposal areas designated as Phase 1, 2, 3, 4, 4A, and 5. No GCCS construction activities are planned in Phase 1 and 2. Drilling and pipe installation will take place in Phase 3, 4A and 5. For Phase 4, no drilling is planned and pipe installation will only occur within the existing soil cover.

# LANDFILL GAS COLLECTION AND CONTROL SYSTEM

The primary components of the GCCS include the following:

- Landfill gas extraction wells
- Landfill gas header and lateral piping
- Landfill gas condensate controls (sumps, air line, and force main)
- Connecting to existing passive LFG trenches and vents
- Blower flare station (blower and utility flare)
- Air compressor
- Landfill gas-fueled generator and associated landfill gas treatment and compression systems (in future)

The GCCS will be installed in portions of Phase 3, Phase 4A, Phase 4, and Phase 5. Construction Drawings for the GCCS are provided Attachment A. The remainder of this permit application describes the GCCS in more detail.

## LFG Extraction Wells

LFG extraction wells will be drilled into the existing waste mass at the depths depicted on the Well Completion Schedule, Sheet 4 of 6 (Attachment A). The well depths were established following industry standards and based on our engineering judgment and experience. The bottom of the wells was set at least 15 feet above the landfill's base liner system.

To insure the wells do not penetrate the bottom liner system, as-built drawings were obtained from Johnston County and reviewed by SCS. All lined areas (Phases 4A and 5) have survey records that include the northing, easting, and elevation of the base liner system. This survey information was used to maintain a minimum distance of 15 feet above the base liner system when drilling. In areas where there is less than 30 feet of waste the minimum distance above the base liner may be shortened to 10 feet. The base of the landfill phases that do not have a synthetic base liner (Phase 3) will also be avoided by finding any available survey information or assuming that the base grades are equal to the native topography outside the limit of waste. The design for a soil base liner system will again include a minimum of 15 feet from the assumed base liner.

Proposed wells have been overlaid on the surveyed baseliner system to insure that at the specific point a well will be installed the minimum buffer is present. The well locations will be surveyed by a professional surveyor prior to drilling. The survey results will be reviewed by a professional engineer and the well schedule revised if necessary.

Refer to Attachment B for SCS's CQA Guidelines for drilling LFG extraction wells. These CQA guidelines are part of a larger SCS program related to standard procedures and quality assurance.

## LFG Header and Lateral Piping

The GCCS will have various pipes that connect the gas wells to the flare. There will be lateral lines 4-in in diameter connected to main header pipes 8-in, 10-in, and 12-in in diameter. All piping will be HDPE SDR 17 pipe. These pipes are sized using industry standards to carry existing and projected LFG flow. A LFG projection model prepared by SCS was used to estimate expected current and future LFG collection.

Piping will be installed according to details in the attached set of construction plans. These plans illustrate the network of pipes to be installed. The details also illustrate how the piping, and other associated aspects of the GCCS will be constructed. An excavator with a two foot wide bucket will be used to dig the trenches two to three feet deep for installation of the various pipes. Also as seen in the details, the HDPE GCCS pipe will be run through corrugated metal pipe at all road crossings to protect the pipe from crushing.

## Condensate Management

Condensate is formed within the GCCS piping network as LFG cools. Condensate is collected at the low points of the piping network in condensate sumps. Multiple condensate sumps are incorporated into the GCCS. Each condensate sump is equipped with a pneumatic pump which transfers the condensate into a force main. The locations of the sumps and force mains are illustrated on the Construction Drawings (Attachment A). Condensate is eventually transferred into the Landfill's leachate management system where it is properly disposed. Force mains not located within the waste limits will be dual-contained.

## Blower/Flare Station

The blower/flare station will utilize a candlestick flare to combust the collected LFG. The Landfill has already received an Air Permit from the NC Department of Environment and Natural Resources' Division of Air Quality for the construction and operation of this system. The blowers located at the blower/flare station will be used to pull the gas from the Landfill and send it through the candlestick flare or to the planned Landfill Gas Energy Project.

## Landfill Gas Energy Project

After the GCCS is installed and becomes operational, the Project Team plans to install a Cummins C2000 N6C Engine, or equivalent, to convert LFG into electricity. The electricity produced will them be placed on the grid. This specific engine has the capability to produce up to 2 MW of electricity. Electricity will depend on the amount of LFG that is recovered from the Landfill and collected by the GCCS.

## Disposal of Excavated Waste

During drilling and pipe trenching, MSW will be generated. All MSW generated during the installation of the GCCS will be hauled to the Landfill's working face in accordance with the Landfill's operating permit.

No MSW will be left on top of the Landfill or exposed overnight. During normal operations the construction crew and the site will communicate so excavation and drilling cease for the day prior to closing the active disposal area. This will allow for proper disposal and daily cover of excavated waste.

### Existing Permitted cap

Phase 4 is the only area with a permitted cap and no drilling will take place in Phase 4. Some excavation will be required to install piping to existing LFG horizontal collectors. In areas with a synthetic cap, the LFG collection pipes will be installed above the synthetic liner within the vegetative soil layer. Excavated soils will be placed back around the installed pipe and used as backfill for the trench.

## CLOSING

The installation of the GCCS will be conducted by SCS Field Services under a design-build contract between Blue Source and SCS. We anticipate the start of construction in December 2010.

The GCCS installation will facilitate the collection of LFG for the Green Energy Project and Carbon Credit Project. Please do not hesitate to contact either of the undersigned if you have any questions or comments at (704) 504-3107.

Sincerely,

J Morgan, PE
Senior Project Professional
**SCS ENGINEERS**

Steven C. Lamb, PE
Vice President
**SCS ENGINEERS**

jm/scl

cc: Rick Proctor, Johnston County Solid Waste Manager
Annika Colston, Blue Source
Matt Wells, Blue Source
Guy Lewis, SCS Field Services

Enclosures

M:\PROJECT FILES\02210301.00 - BlueSource Johnston County\SW Permit Mod\JC SW Permit Mod v2.0.doc

# ATTACHMENT A

Construction Drawings

# PERMIT DRAWINGS

## JOHNSTON COUNTY LANDFILL
## SOLID WASTE PERMIT #51-03
## LANDFILL GAS PROJECT


**BLUE SOURCE LLC**
26 W. 17TH STREET, SUITE 503
NEW YORK, NY 10011

**SCS ENGINEERS, PC**
2520 WHITEHALL PARK DRIVE, SUITE 450
CHARLOTTE, NORTH CAROLINA 28273
(704) 504-3107


**JOB NO. 02210301.00**
**NOVEMBER 2010**

SITE

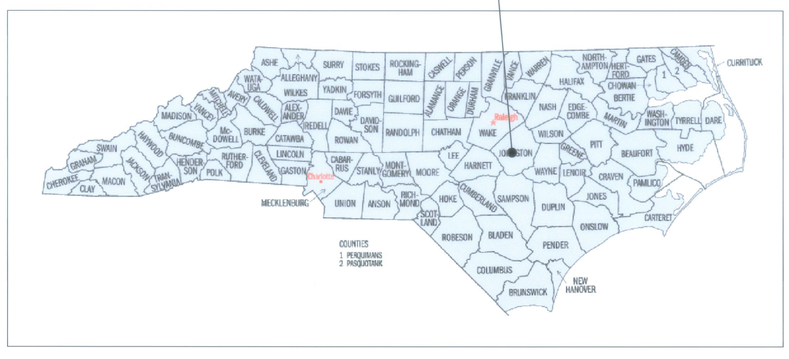


AREA MAP
SCALE: AS SHOWN

SITE

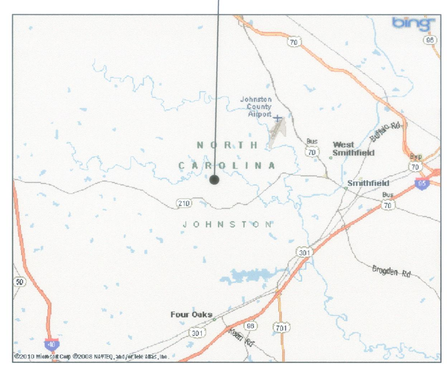


LOCATION MAP
SCALE: AS SHOWN

INDEX OF SHEETS


| SHEET NO. | DESCRIPTION |
|---|---|
| 1 | TITLE SHEET |
| 2 | EXISTING CONDITIONS PLAN |
| 3 | SITE PLAN |
| 4 | WELL DETAILS |
| 5 | PIPING DETAILS |
| 6 | GENERAL DETAILS |


**PERMIT DRAWINGS**
**DO NOT USE FOR CONSTRUCTION**
DATE: 11/30/10

NC CORP. LICENSE NO. C-1837

| NO. | REVISION | DATE |
|---|---|---|

SHEET TITLE: TITLE SHEET

PROJECT TITLE: JOHNSTON COUNTY LANDFILL LANDFILL GAS PROJECT

CLIENT: BLUE SOURCE LLC, 26 W 17TH STREET, SUITE 503, NEW YORK, NY 10011

SCS ENGINEERS, PC
2520 WHITEHALL PARK DRIVE, SUITE 450
CHARLOTTE, NORTH CAROLINA 28273
PHONE: (704) 504-3107 FAX: (704) 504-3174

PROJ. NO. 02210301.00 | DSN. BY: JLM | DWN. BY: TAS | CHK. BY: JLM | QA RVW BY: CL | APP. BY: SCL

DATE: NOVEMBER 2010
SCALE: AS SHOWN
DRAWING NO. 1 of 6

M:\CADD PROJECT DRAWINGS\02210301.00-Johnston County\TITLE SHEETv1.1.dwg Nov 30, 2010 - 1:01pm Layout Name: TITLE SHEET By: jmorgan

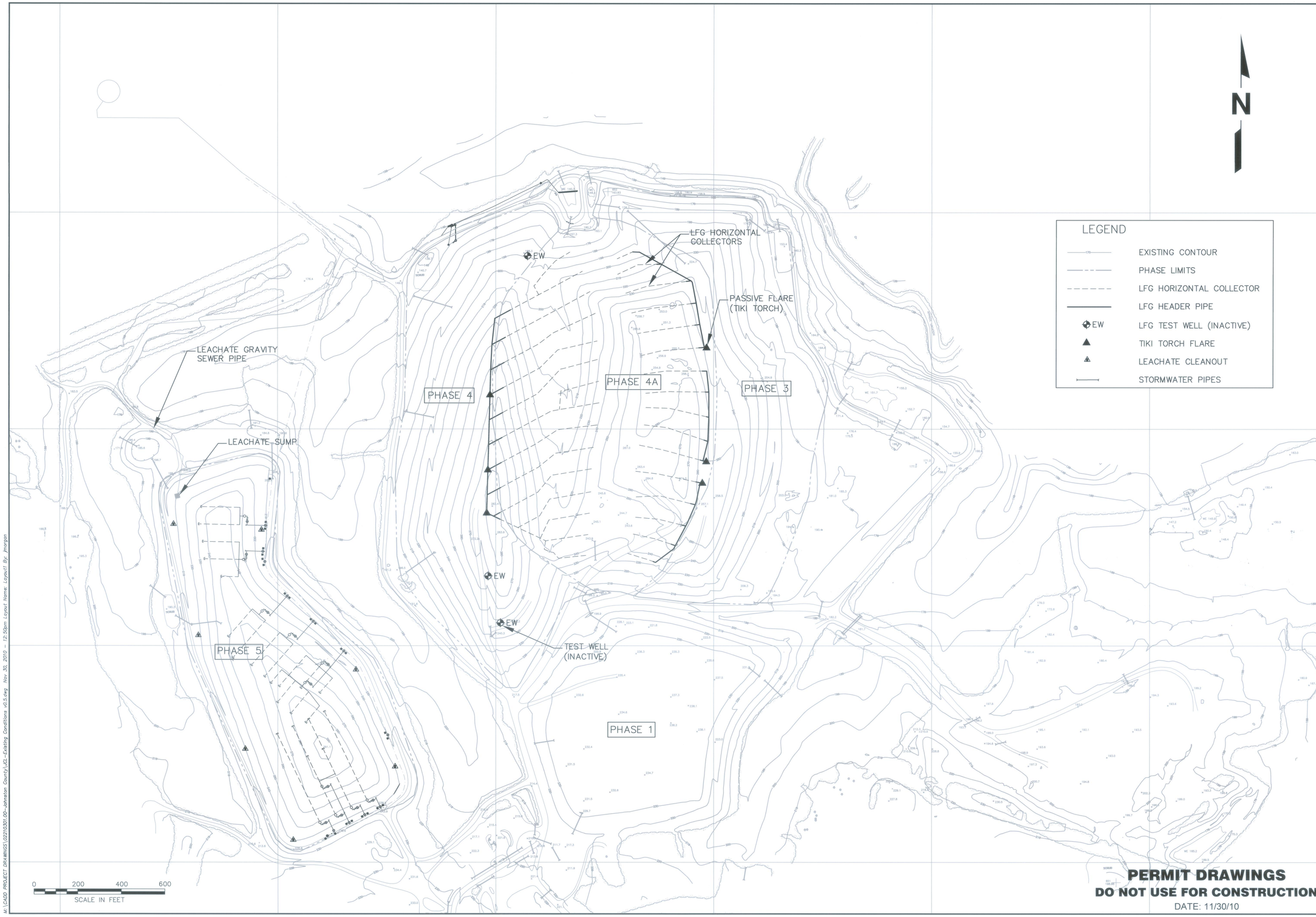


**PERMIT DRAWINGS**
**DO NOT USE FOR CONSTRUCTION**
DATE: 11/30/10

NORTH CAROLINA PROFESSIONAL SEAL 033608 ENGINEER JOHN LAWRENCE MORRISON

NORTH CAROLINA LICENSE NO. C-1837

| NO. | REVISION | DATE |
|---|---|---|
| | | |

SHEET TITLE
**EXISTING CONDITIONS**

PROJECT TITLE
**JOHNSTON COUNTY LANDFILL LANDFILL GAS PROJECT**

CLIENT
**BLUE SOURCE LLC**
26 W 17TH STREET, SUITE 504
NEW YORK, NY 10011


**SCS ENGINEERS, PC**
2520 WHITEHALL PARK DRIVE, SUITE 450
CHARLOTTE, NORTH CAROLINA 28273
PHONE: (704) 504-3107 FAX: (704) 504-3174


PROJ. NO. 02210301.00 | DWN. BY: TAS | QA/QC BY: CL
DSN. BY: JLM | CHK. BY: SCL | APP. BY: CL

DATE: NOVEMBER 2010
SCALE: AS SHOWN
DRAWING NO. 2 of 6

M:\CADD PROJECT DRAWINGS\02210301.00-Johnston County\JCL-Existing Conditions v0.5.dwg Nov 30, 2010 - 12:50pm Layout Name: Layout1 By: jhorgan

| Ex. Torch | Wellhead |
|---|---|
| T-1 | EW-402 |
| T-2 | HC-31 |
| T-3 | EW-403 |
| T-4 | EW-404 |
| T-5 | HC-30 |
| T-6 | HC-33 |
| T-7 | HC-41 |
| T-8 | HC-42 |
| T-9 | HC-44 |

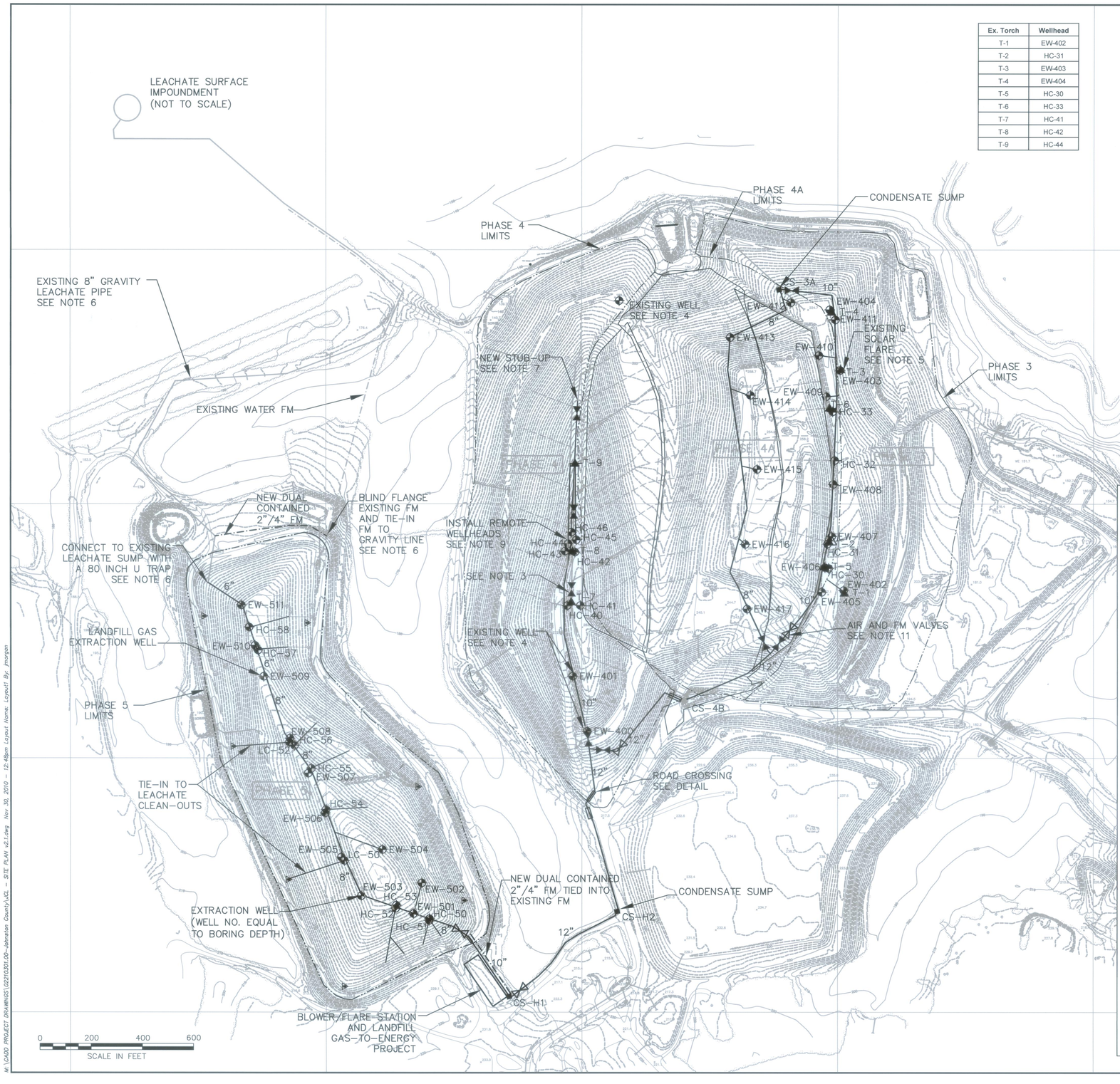


N

## LEGEND

- EXISTING CONTOUR
- PHASE LIMITS
- LFG HORIZONTAL COLLECTOR
- LFG HEADER PIPE
- EW — LFG EXTRACTION WELL
- T-1 — EXISTING PASSIVE SOLAR FLARE (TORCH)
- HC — WELL HEAD ON EXISTING HORIZONTAL COLLECTOR
- CS-H1 — CONDENSATE SUMP
- LEACHATE CLEANOUT
- LFG HEADER VALVE
- AIRLINE/FORCEMAIN VALVES

## NOTES:

1. INCLUDE 2-IN AIR AND 2-IN FM IN TRENCH WITH ALL PIPING IN PHASE 5.
2. AIR COMPRESSOR SHALL BE AN INGERSOL RAND UP5 15-8. CONTRACTOR SHALL ALSO PROVIDE ENCLOSURE FOR AIR COMPRESSOR.
3. INSTALL 8-IN VALVE IN EXISTING 8-IN HEADER AND ONE ADDITIONAL STUB-UP FROM THE 8-IN HEADER IN ORDER TO ISOLATE EXISTING HORIZONTAL COLLECTORS IN PHASE 4 (SEPARATE COST).
4. THERE ARE 3 EXISTING LFG TEST WELLS IN PHASE 4. CONTRACTOR SHALL INSTALL WELLHEAD ON TWO OF THESE. (EW-400 and EW-401)
5. EXISTING TORCHES ARE MARKED AS T-X. CONTRACTOR SHALL INSTALL WELLHEAD ON ALL OF THESE. DRAWING DEPICTS SOME AS HC WELLS THAT ARE CONNECTED TO A HORIZONTAL NETWORK
6. THERE IS AN EXISTING LEACHATE SUMP IN THE NORTH CORNER OF PHASE 5. LEACHATE FLOWS BY GRAVITY FROM THE SUMP TO THE SURFACE IMPOUNDMENT
7. REMOTE WELLS ARE CONNECTED TO THE NEW STUB-UP, THE EXISTING TORCH (T-9), AND THE NORTH BANK OF NEW HORIZONTAL COLLECTORS IN PHASE 4
8. WELL NUMBERS ARE GROUPED ACCORDING TO PHASE
9. CONTRACTOR WILL RUN 4-IN LATERALS TO THE NEW STUB-UP, THE EXISTING TORCH (T-9), AND THE NORTH BANK OF NEW HORIZONTAL COLLECTORS IN PHASE 4 FOR A TOTAL OF THREE REMOTE WELLHEADS
10. INCLUDE 2-IN AIR AND FORCEMAIN IN THE 12-IN PIPING FROM THE FLARE TO PHASE 3 AND ALSO ALONG THE 10-IN PIPING TO CS-3A
11. CONTRACTOR TO INSTALL AIR AND FORCEMAIN VALVES AS SHOWN ON DRAWING AND IN DETAILS 1-4 ON SHEET 6

**PERMIT DRAWINGS**
**DO NOT USE FOR CONSTRUCTION**
DATE: 11/30/10

NORTH CAROLINA PROFESSIONAL SEAL 033608 ENGINEER W. LAWRENCE SCHOLL
11/30/10
NORTH CAROLINA LICENSE NO. C-1837

| NO. | REVISION | DATE |
|---|---|---|
| | | |

SHEET TITLE: SITE PLAN

PROJECT TITLE: JOHNSTON COUNTY LANDFILL LANDFILL GAS PROJECT

CLIENT: BLUE SOURCE LLC
26 W 17TH STREET, SUITE 504
NEW YORK, NY 10011


SCS ENGINEERS, PC
2520 WHITEHALL PARK DRIVE, SUITE 450
CHARLOTTE, NORTH CAROLINA 28273
PHONE: (704) 504-3107 FAX: (704) 504-3174


PROJ. NO. 02210301.00 | DSN. BY: JLM | DWN. BY: TAS | CHK. BY: SCL | QA/QCW BY: CL | APP. BY: CL

DATE: NOVEMBER 2010
SCALE: AS SHOWN
DRAWING NO. 3 of 6

M:\CADD PROJECT DRAWINGS\02210301.00-Johnston County\JCL - SITE PLAN v2.1.dwg Nov 30, 2010 - 12:48pm Layout Name: Layout1 By: jmorgan

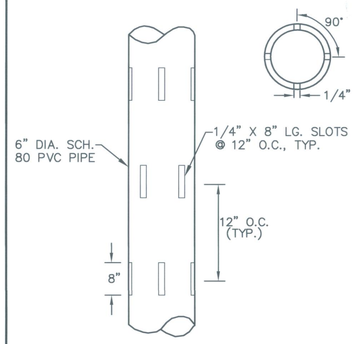


**SLOTTED PIPE (PVC) FOR VERTICAL WELLS**
NTS

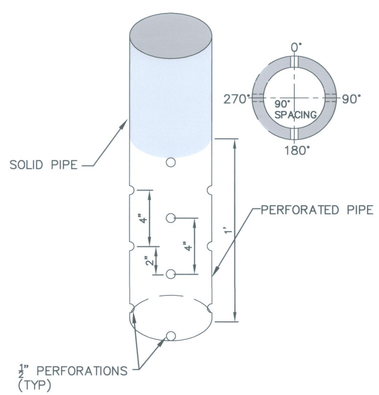


**PERFORATED PIPE (HDPE) DETAIL**
NTS

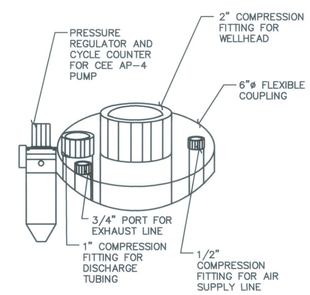


**WELLHEAD ADAPTER FOR AP-4 PUMP**
NTS

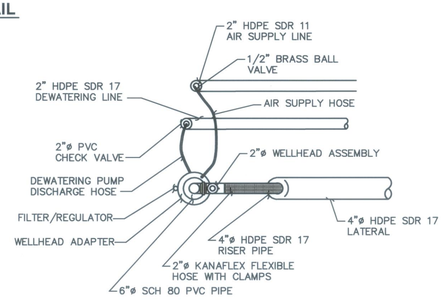


**PLAN VIEW FOR DEWATERING PUMP INSTALLATION**
NTS

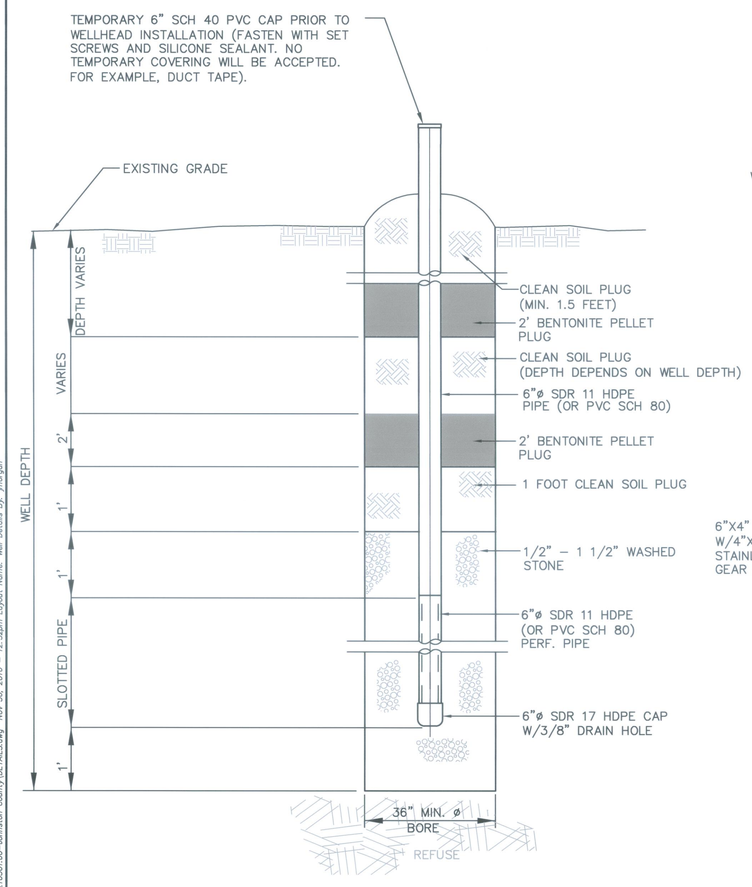


**VERTICAL EXTRACTION WELL DETAIL**
NTS

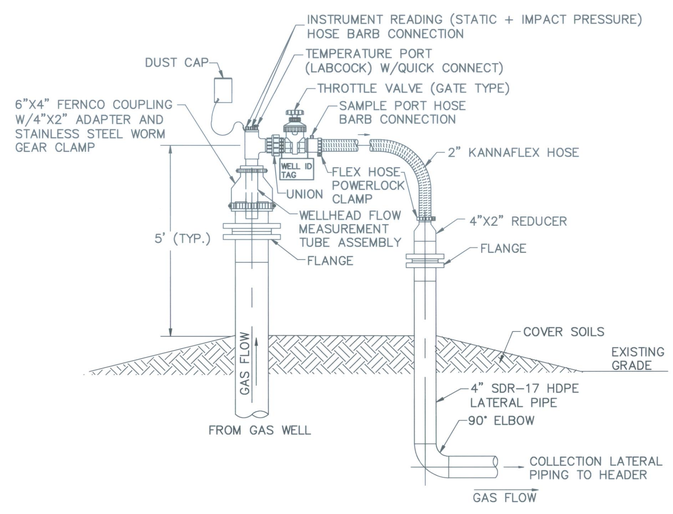


**WELLHEAD DETAIL**
NTS

## WELL SCHEDULE

| WELL ID | NORTHING | EASTING | ANTICIPATED GROUND SURFACE ELEVATION | FINAL GROUND SURFACE ELEVATION | BASELINER ELEVATION (Note 2) | LANDFILL DEPTH | WELL DEPTH | 6" SOLID PIPE LENGTH (Note 8) | 6" PERFORATED PIPE LENGTH |
|---|---|---|---|---|---|---|---|---|---|
| EW-405 | 643,653 | 2,170,938 | 260 | | | | 41 | 20 | 25 |
| EW-406 | 643,750 | 2,170,951 | 256 | | | | 41 | 20 | 25 |
| EW-407 | 643,872 | 2,170,977 | 250 | | | | 41 | 20 | 25 |
| EW-408 | 644,077 | 2,170,983 | 250 | | | | 41 | 20 | 25 |
| EW-409 | 644,422 | 2,170,956 | 238 | | | | 41 | 20 | 25 |
| EW-410 | 644,585 | 2,170,926 | 238 | | | | 41 | 20 | 25 |
| EW-411 | 644,725 | 2,170,991 | 220 | | | | 41 | 20 | 25 |
| EW-412 | 644,792 | 2,170,817 | 218 | | | | 41 | 20 | 25 |
| EW-413 | 644,655 | 2,170,580 | 220 | | 164 | 56 | 41 | 18 | 27 |
| EW-414 | 644,428 | 2,170,659 | 260 | | 185 | 75 | 60 | 24 | 40 |
| EW-415 | 644,136 | 2,170,686 | 262 | | 192 | 70 | 55 | 22 | 37 |
| EW-416 | 643,841 | 2,170,640 | 263 | | 193 | 70 | 55 | 22 | 37 |
| EW-417 | 643,586 | 2,170,647 | 245 | | 194 | 51 | 36 | 15 | 25 |
| | | | | | | | | | |
| EW-501 | 642,388 | 2,169,341 | 272 | | 232 | 40 | 25 | 14 | 15 |
| EW-502 | 642,509 | 2,169,373 | 270 | | 224 | 46 | 31 | 14 | 21 |
| EW-503 | 642,458 | 2,169,138 | 280 | | 224 | 56 | 41 | 20 | 25 |
| EW-504 | 642,640 | 2,169,219 | 284 | | 224 | 60 | 45 | 19 | 30 |
| EW-505 | 642,610 | 2,169,060 | 276 | | 228 | 48 | 33 | 15 | 22 |
| EW-506 | 642,784 | 2,168,995 | 272 | | 227 | 45 | 30 | 14 | 20 |
| EW-507 | 642,941 | 2,168,929 | 270 | | 224 | 46 | 31 | 15 | 20 |
| EW-508 | 643,078 | 2,168,859 | 262 | | 224 | 38 | 23 | 15 | 12 |
| EW-509 | 643,324 | 2,168,757 | 250 | | 223 | 27 | 17 | 14 | 7 |
| EW-510 | 643,443 | 2,168,722 | 246 | | 221 | 25 | 15 | 14 | 5 |
| EW-511 | 643,603 | 2,168,670 | 246 | | 221 | 25 | 15 | 14 | 5 |
| TOTAL | | | | | | | 881 | 430 | 547 |

NOTES:

1. THIS DRAFT WELL COMPLETION SCHEDULE IS NOT INTENDED FOR CONSTRUCTION UNTIL ACTUAL SURVEY DATA IS OBTAINED BY CONTRACTOR AND THE WELL COMPLETION SCHEDULE IS REVISED BY THE DESIGN ENGINEER.
2. BASE GRADE DATA BY RSG.
3. EXISTING LANDFILL SURFACE TOPOGRAPHY SHOWN ON SITE PLANS IS FROM 2009 AERIAL FLYOVER.
4. CONTRACTOR AND ENGINEER SHALL VERIFY ALL FIELD CONDITIONS INCLUDING PRE-CONSTRUCTION WELL SURVEY STAKES AND NOTIFY ENGINEER OF ANY DISCREPANCIES BETWEEN ACTUAL CONDITIONS AND CONDITIONS DEPICTED IN THESE PLANS PRIOR TO DRILLING.
5. FOLLOWING REVIEW OF SURVEY DATA, CONTRACTOR SHALL GET AUTHORIZATION FROM OWNER AND ENGINEER PRIOR TO DRILLING.
6. NO DRILLING SHALL PROCEED WITHOUT AUTHORIZATION AND ACCEPTANCE INDICATED BY SIGNATURE BELOW
7. WELLS DEPTHS WILL VARY ACCORDING TO CONDITIONS ENCOUNTERED.
8. SOLID PIPE LENGTHS INCLUDE A 5 FEET OF SOLID PIPE ABOVE GRADE

CQA CONSULTANT | CONTRACTOR | OWNER

**PERMIT DRAWINGS**
**DO NOT USE FOR CONSTRUCTION**
DATE: 11/30/10

NORTH CAROLINA PROFESSIONAL SEAL 033608 ENGINEER LAWRENCE MOORE
NC CORP. LICENSE NO. C-1837

| NO. | REVISION | DATE |
|---|---|---|

SHEET TITLE: **WELL DETAILS**
PROJECT TITLE: **JOHNSTON COUNTY LANDFILL LANDFILL GAS PROJECT**

CLIENT: BLUE SOURCE LLC, 26 W 17TH STREET, SUITE 504, NEW YORK, NY 10011

**SCS ENGINEERS, PC**
2520 WHITEHALL PARK DRIVE, SUITE 450
CHARLOTTE, NORTH CAROLINA 28273
PHONE: (704) 504-3107 FAX: (704) 504-3174

PROJ. NO. 02210301.00 | DSN. BY: JLM | DWN. BY: TAS | CHK. BY: JLM | QA RVW BY: CDH | APP. BY: SDL

DATE: NOVEMBER 2010
SCALE: AS SHOWN
DRAWING NO. 4 of 6

M:\CADD PROJECT DRAWINGS\02210301.00-Johnston County\DETAILS.dwg Nov 30, 2010 - 12:53pm Layout Name: Well Details By: jmorgan

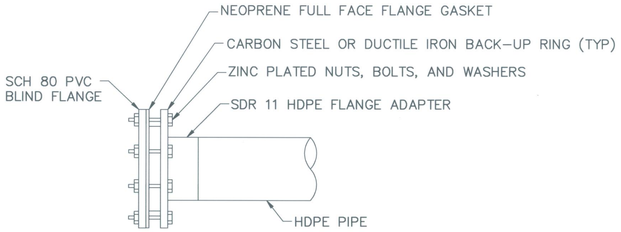


## BLIND FLANGE DETAIL

NTS

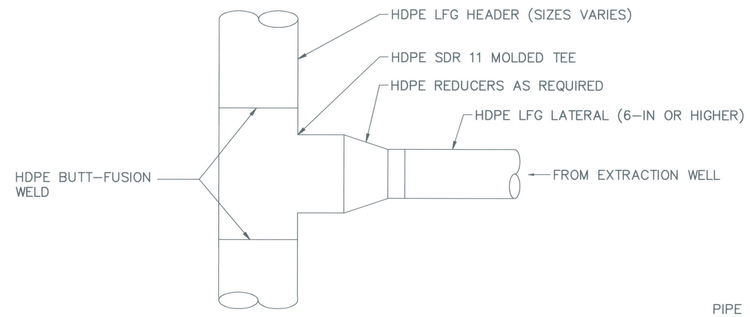


## LATERAL TIE-IN W/TEE DETAIL

NTS

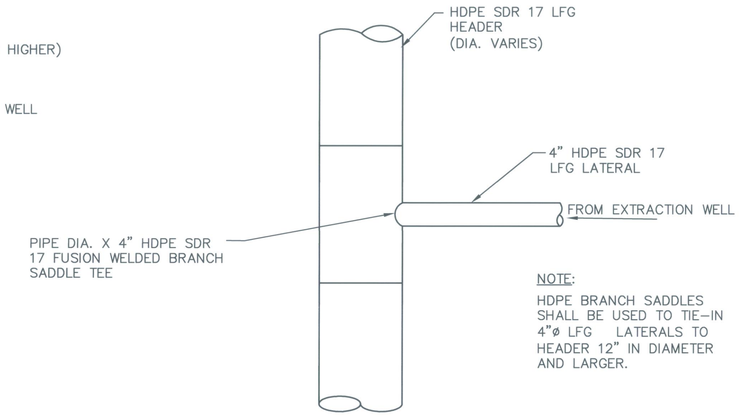


NOTE:
HDPE BRANCH SADDLES SHALL BE USED TO TIE–IN 4"ø LFG LATERALS TO HEADER 12" IN DIAMETER AND LARGER.

## LFG LATERAL TIE-IN WITH BRANCH SADDLE DETAIL

NTS

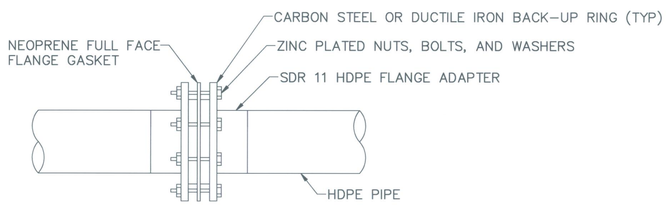


## FLANGE DETAIL

NTS

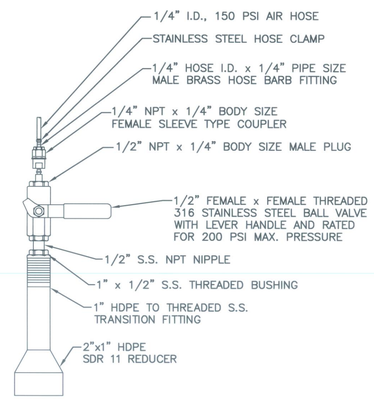


## AIR SUPPLY LINE VALVE DETAIL

NTS

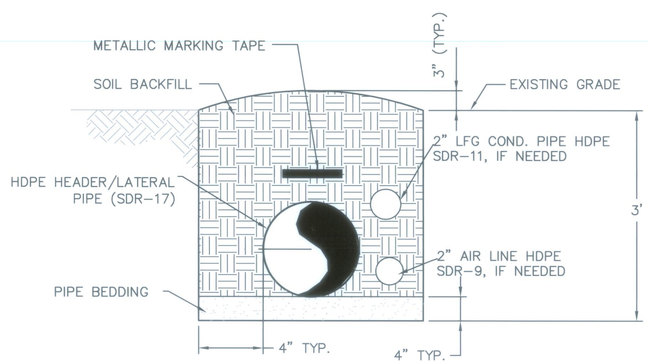


## PIPE TRENCH DETAIL

NTS

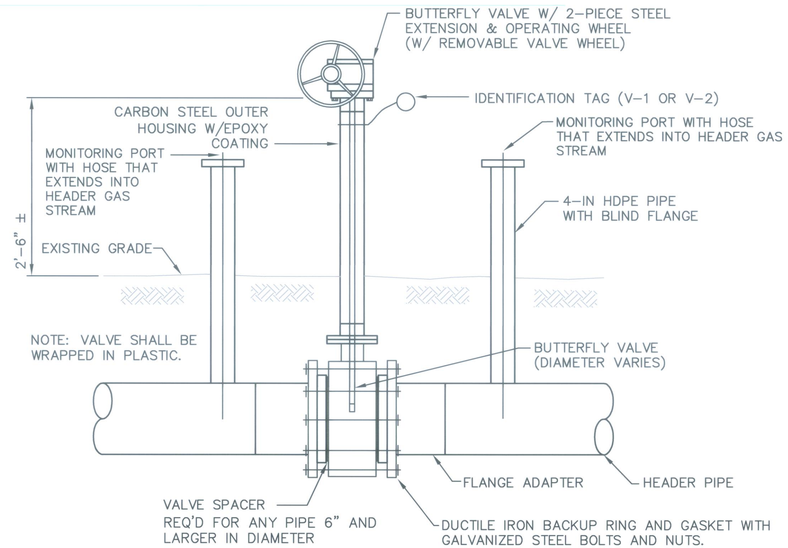


## ISOLATION VALVE DETAIL

NTS

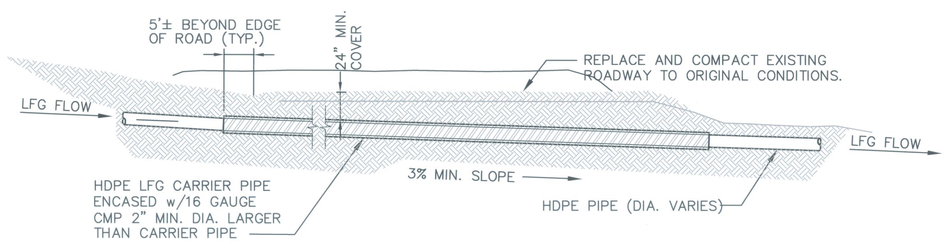


## ROAD CROSSING DETAIL

NTS

**PERMIT DRAWINGS**
**DO NOT USE FOR CONSTRUCTION**
DATE: 11/30/10

NORTH CAROLINA PROFESSIONAL SEAL 19608 ENGINEER JOHN LAWRENCE MORGAN 12/30/10

NC CORP. LICENSE NO. C–1837

| NO. | REVISION | DATE |
|---|---|---|
| | | |

SHEET TITLE: **PIPING DETAILS**

PROJECT TITLE: **JOHNSTON COUNTY LANDFILL LANDFILL GAS PROJECT**

CLIENT: **BLUE SOURCE LLC**
26 W 17TH STREET, SUITE 504
NEW YORK, NY 10011

**SCS ENGINEERS, PC**
2520 WHITEHALL PARK DRIVE, SUITE 450
CHARLOTTE, NORTH CAROLINA 28273
PHONE: (704) 504-3107 FAX: (704) 504-3174

PROJ. NO: 02210301.00 | DSN. BY: JLM | DWN. BY: TAS | CHK. BY: JLM | QA RVW BY: CDH | APP. BY: SCL

DATE: NOVEMBER 2010

SCALE: AS SHOWN

DRAWING NO. 5 of 6

M:\CADD PROJECT DRAWINGS\02210301.00–Johnston County\DETAILS v1.0.dwg Nov 30, 2010 – 12:53pm Layout Name: Piping Details By: jmorgan

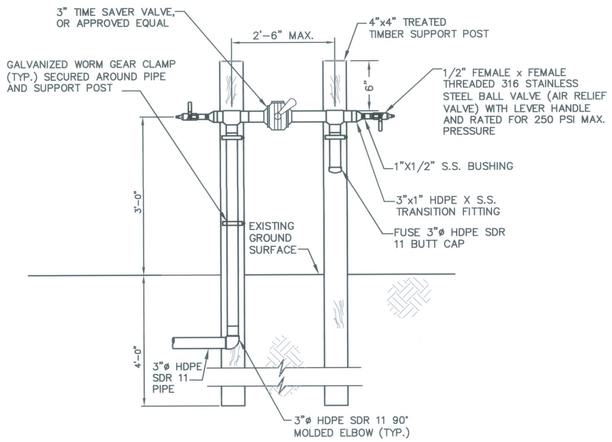


NOTE: CAN BE USED FOR FUTURE CONNECTION

## FORCEMAIN ISOLATION VALVE AND TERMINATION DETAIL

NTS

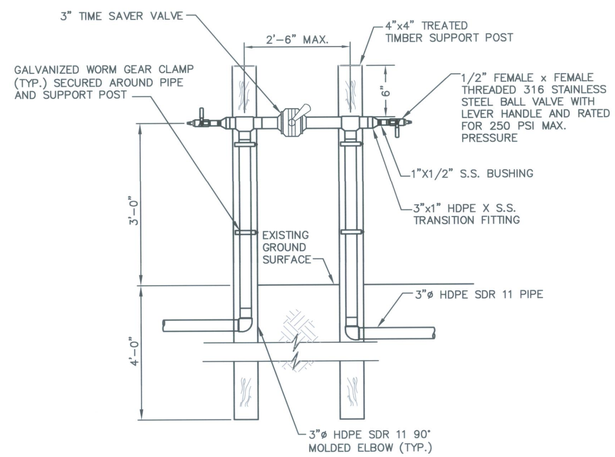


## FORCEMAIN ISOLATION AND BLOWOFF VALVES DETAIL

NTS

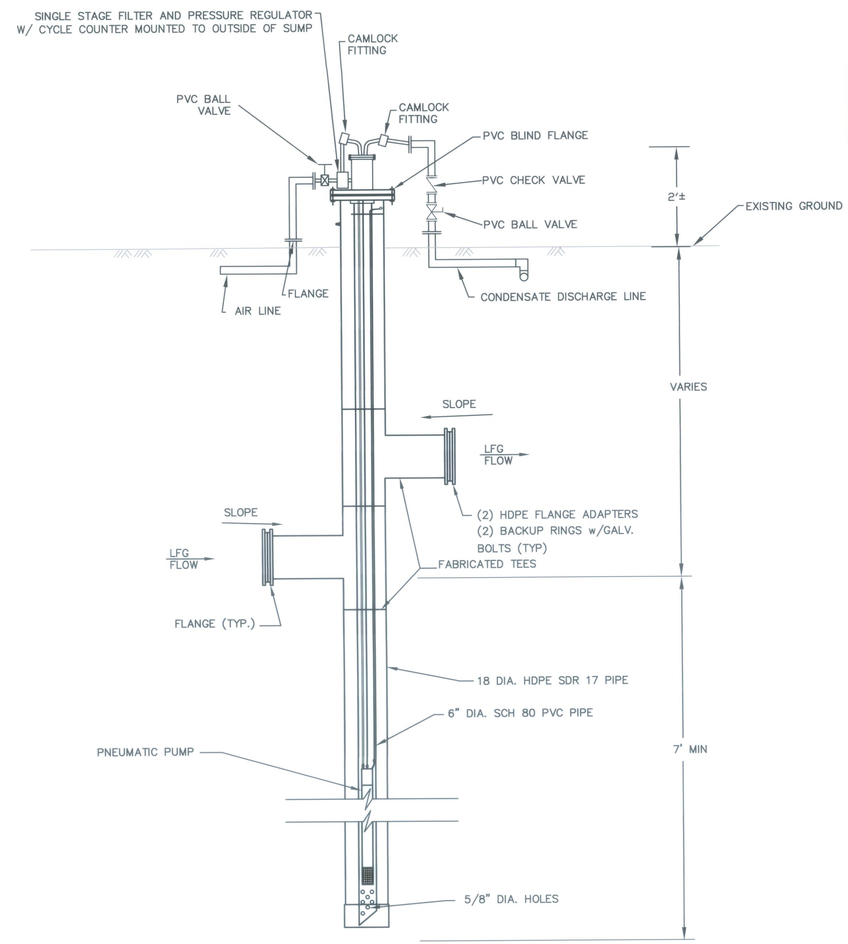


## CONDENSATE SUMP DETAIL

NTS

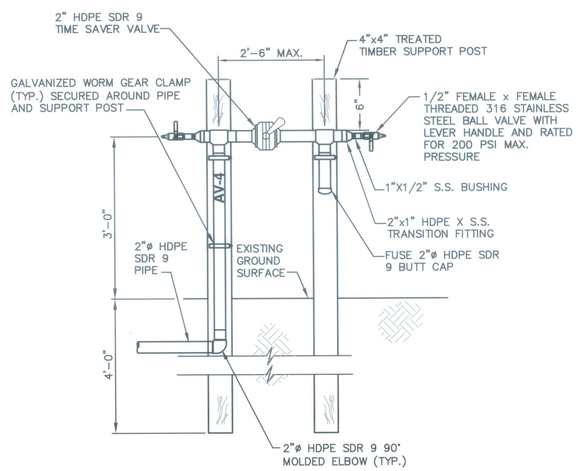


## AIR LINE ISOLATION VALVE AND TERMINATION DETAIL

NTS

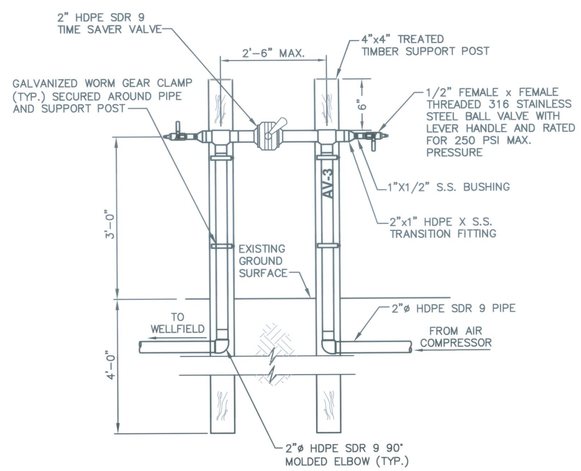


## AIR LINE ISOLATION AND BLOWOFF VALVES DETAIL

NTS

**PERMIT DRAWINGS**

**DO NOT USE FOR CONSTRUCTION**

DATE: 11/30/10

NORTH CAROLINA PROFESSIONAL SEAL 033608 ENGINEER JOHN LAWRENCE MOSSER
11/30/10

NC CORP. LICENSE NO. C-1837

| NO. | REVISION | DATE |
|---|---|---|
| | | |

SHEET TITLE: GENERAL DETAILS

PROJECT TITLE: JOHNSTON COUNTY LANDFILL LANDFILL GAS PROJECT

CLIENT: BLUE SOURCE LLC, 26 W 17TH STREET, SUITE 504, NEW YORK, NY 10011


SCS ENGINEERS, PC
2520 WHITEHALL PARK DRIVE, SUITE 450
CHARLOTTE, NORTH CAROLINA 28273
PHONE: (704) 504-3107 FAX: (704) 504-3174


PROJ. NO. 02210301.00 | DSN. BY: JLM | DWN. BY: TAS | CHK. BY: JLM | QA R/W BY: CDH | APP. BY: SCL

DATE: NOVEMBER 2010

SCALE: AS SHOWN

DRAWING NO. 6 of 6


u:\CADD PROJECT DRAWINGS\02210301.00-Johnston County\DETAILS v1.0.dwg Nov 30, 2010 - 12:53pm Layout Name: General Details By: jmorgan

# ATTACHMENT B

SCS CQA Guidelines

# Standard Procedure
# Construction Quality Assurance for Installation of LFG Extraction Wells

## PURPOSE

The purpose of this Standard is to describe the procedures and activities to be performed by SCS personnel in the field and office in support of drilling and installation of LFG extraction wells. This Standard supplements SCS's Quality Assurance Program, which also should be reviewed with respect to review and approval procedures for engineering drawings and documents.

This Standard addresses the following:

- Procedures used by SCS designers and engineers during the development of Construction Drawings and the Well Completion Schedule.
- Procedures used by SCS CQA personnel, both field and project engineer.

## DESIGN ACTIVITIES

1. Obtain the most recent topographic map for the area where construction will occur.

2. Obtain the As-Built drawings for the bottom liner system. If As-Built drawings of the bottom liner system are not available, use the permit drawings. However, when using permit drawings, SCS should note this on the Construction Drawings or Well Completion Schedule. The Client should also be made aware that the As-Built drawings could not be located.

3. Establish the "depth of waste" for a given well, then calculate the well depth accordingly (e.g., 75% of waste depth, 15 feet off the bottom, maximum depth approx. 90 to 100 feet).

4. The Draft Well Completion Schedule provided on the Construction Drawings should be used for estimating drilling depths and pipe quantities <u>only</u>. Include a note under the Draft Well Completion Schedule.

   **This draft well completion schedule is not intended for construction, until actual survey data is obtained and the well completion schedule is revised by the design engineer.**

5. Have second person review the well completion schedule, including checking coordinates, elevations, and calculations.

6. Never plan to drill through a landfill bottom into soil below (with or without a liner).

## CONSTRUCTION QUALITY ASSURANCE ACTIVITIES

1. Obtain the services of a professional land surveyor to stake the well field and to obtain the actual ground elevation at each well location. [Note: The surveyor may be hired by SCS during the design-phase or as part of our CQA services. In some cases, the Contractor or Owner may procure the services of the surveyor.]. Do not rely on GPS survey information.

2. The surveyed elevations should be written on the stakes in the field by the surveyor along with the well ID. The surveyor should provide the survey data (northing, easting, and elevation) to the Design Engineer and CQA Consultant.

3. The surveyed ground elevations should be reviewed by the Design Engineer and the Well Completion Schedule should be revised and re-issued to the Contractor. The Final Well Completion Schedule should be "signed off" by the Design Engineer.

4. The CQA Monitor should walk the site and verify the well stakes and elevations.

5. The CQA Monitor should "sign off" on the Final Well Completion Schedule" indicating that the actual ground elevations have been incorporated into the Schedule, and the drilling depths have been reviewed.

6. The CQA Monitor should verify the math on the Well Completion Schedule to make sure it makes sense!

7. The CQA Monitor must review the Final Well Completion Schedule with the Driller and General Contractor. The Driller and General Contractor should "sign off" on the Final Well Completion Schedule" indicating that the actual ground elevations have been incorporated into the Schedule, and the drilling depths have been reviewed. If there is any question or confusion regarding the information on the Well Completion Schedule, sequencing of well construction, or any other construction details, the Design Engineer should be contacted immediately for clarification. In no case should drilling proceed until all parties are in concurrence regarding the well drilling details.

8. Once the drill rig is set up on the well, the CQA Monitor must again verify the elevation on the stake is the same as on the Final Well Completion Schedule.

9. The CQA Monitor and Driller should verify the drill depth before drilling begins.

10. If drilling accidently goes through the bottom of a landfill (with or without a liner), the boring hole should be grouted back to at least to the refuse bottom The SCS Client Manager should be immediately contacted in order to coordinate with the Client and regulatory agencies if necessary regarding any further remedial measures.

## Chao, Ming-tai

**From:** Morgan, J [JMorgan@scsengineers.com]
**Sent:** Wednesday, December 01, 2010 8:55 AM
**To:** Chao, Ming-tai
**Subject:** Johnson County Solid Waste Permit Mod. 02210301.00
**Attachments:** JC Construciton Drawings v4.0.pdf

Mr. Chao,
Please see the attached Solid Waste Permit Mod. You should receive the hardcopy via FedEx with the full size drawings this afternoon.

Please call me if you have any questions or concerns.
Thanks,

J Morgan, PE
SCS Engineers
Sr. Project Engineer
jmorgan@scsengineers.com
704.504.3107

2520 White Hall Park Drive
Suite 450
Charlotte, NC 28273
Fax 704.504.3174
www.scsengineers.com