Southwestern Environmental. LLC. • 9004 Thompson Lake Drive • Missouri City, Texas 77459-7538
Office: (281) 431-3571 • Fax: (281) 431-9863 • Email: jlarue@swenv.com

February 7, 2011

Mr. Vance Jackson, P.G.
North Carolina Department of Environment and Natural Resources
Division of Waste Management
401 Oberlin Road, Suite 150
Raleigh, North Carolina 27605-1350

Subject: Seaboard Chemical Corporation and City of High Point Riverdale Drive Landfill Site

Dear Mr. Jackson:

On behalf of Seaboard Group II and the City of High Point we hereby submit a revised Technical Memorandum Number E-3 requesting certain changes to the approved remedy at the subject site. This submittal replaces the earlier version. After your review, if there are any questions, or if you need any clarification or additional information, please contact Mr. Gary Babb at (919) 325-0696 or me at (281)-431-3571. Should you require a meeting to discuss these changes please let one of us know and we will schedule one at the earliest possible time.

Thank you for your assistance with this matter. Please feel free to contact us if we may be of assistance.

Sincerely,

Southwestern Environmental, LLC.

James C. LaRue, Oversight Consultant - Seaboard Group II

cc Jackie Drummond, NCDENR
Chris Thomson, City of High Point
Dave Roberson, SGII
Gary Babb, City of High Point
Randy Smith, SGII
Steve Earp, Esq. City of High Point
Amos Dawson, Esq., SGII
Tom Wilson, ERM-NC
Dr. Ari Ferro, URS Corporation
Chris Cuomo, ERM-NC

Attachment – Technical Memorandum E-3

TECHNICAL MEMORANDUM E-3

TO: VANCE JACKSON, P.G.
NORTH CAROLINA DEPRTMENT OF ENVIRONMENT AND NATURAL RESOURCES

FROM: SEABOARD GROUP II AND CITY OF HIGH POINT

SUBJECT: TECHNICAL MEMORANDUM NO. E-3

DATE: FEBRUARY 7, 2011

Introduction

Seaboard Group II and the City of High Point (hereinafter the Parties) submit this Technical Memorandum Number E-3 to request certain revisions to the Scope of Work (SOW) for the remedy at the former Seaboard Chemical Corporation site and the City of High Point closed Riverdale Drive Landfill (collectively referred to as the Site).

The Parties submitted a conceptual remedial design to the North Carolina Department of Environment and Natural Resources (NCDENR) in a document entitled "Remedy Recommendation Document" which was approved by the NCDENR Division of Waste Management (NCDWM) on September 27, 2005. The remedial action program for the Site is now being conducted under a Remedial Action Settlement Agreement (RASA), dated December 29, 2008, with NCDWM, and is based upon the design concepts presented in the Remedy Recommendation Document.

Appendix A of the RASA contains the Declaration and Order (Docket 08-SF-249). Attachment A to that Declaration and Order is the Scope of Work (SOW) for the remedy at the Site agreed to at the time the RASA was executed. Section A-4 of the SOW provides that within 120 days of the approval of the Pre-construction Report for the natural treatment systems the Parties shall commence construction of the constructed treatment wetlands (CTW) and phytoremediation system. In addition, Sections I and L-1 of the SOW require that the Parties submit within 90 days separate Declarations of Perpetual Land Use Restrictions (DPLUR) and survey plats for the former Seaboard Chemical Corporation facility (Seaboard) and the adjacent Crutchfield property located north and east of the Site and the Deep River, and for the former Riverdale Drive Landfill (Landfill) and the Material Recovery Facility (MRF). The survey plats are required to comply with N.C.G.S. 130A-310.8(a). Upon the Divisions approval the Parties are required to record the survey plats and Declarations within 30 days.

Changes to the Natural Treatment Processes

As the remedy has progressed through the completion and submission of the Mechanical Treatment System and Phytoremediation Preconstruction Reports, new information has been developed that indicates certain changes in the remedy are appropriate. More specifically, the Parties have concluded that the CTW is an unnecessary part of the remedy, and request permission from NCDWM to eliminate them from the process.

Following the research and design work done by the Parties leading up to the preparation of the Remedy Recommendation Document in 2005, several published studies were conducted to evaluate the effectiveness of phytoremediation systems in the treatment of chlorinated volatile organic compounds (cVOCs). Those recent studies have lead to a better understanding of the fate of cVOCs in a phytoremediation system. Attached to this Technical Memorandum is a report, prepared by the Parties' consultants (recognized phytoremediation experts), describing the recent research, discussing the fate mechanisms that degrade cVOCs and the new evidence that support this requested change (Attachment 1).

In addition to the recent research, during the latter part of 2009, and over the growing season during 2010, two pilot study plots were dosed with untreated groundwater extracted from the main extraction well (PW-DR1) at the Site. That activity was conducted to pilot test the concept that 1,4-Dioxane could be phytoremediated, and would be taken up by the trees and not leached below the root zone. The resulting information was presented in Attachment A to the Phytoremediation Pre-construction Report submitted to NCDENR on October 25, 2010.

One of the conclusions of that research was that the trees, in fact, did take up the 1,4-Dioxane dissolved in the extracted groundwater, and a bromide tracer was used to establish that during the dosing of the pilot plots the extracted groundwater was not leached below the root zone. This was a significant finding and lead to further investigation of the fate of compounds other than 1,4-Dioxane.

The Parties determined that during the dosing of the pilot plots with untreated groundwater, there was no evidence of excess buildup of cVOCs in the soil. Even though the tree stand was dosed with groundwater that contained untreated levels of cVOCs, there was no evidence of plant damage. To confirm that the cVOCs were degraded, soil samples were collected and analyzed. The result of that sampling is described in Attachment 1. In summary, only trace concentrations of two cVOCs remained in the root zone, and presumably the cVOCs added to the soil had undergone significant degradation. Because it was established that the cVOCs had not leached into the waste layer below the root zone, as confirmed by the bromide tracer in the pilot study, the cVOCs must have been degraded by one, or a combination, of the fate mechanisms discussed in Attachment 1.

It was also determined that the concentration of the cVOCs applied to the test plots was considerably higher (approximately 100 times higher) than the concentration that would be present after the groundwater and leachate are pretreated by air stripping. That, coupled with the fact that the full scale system will be operated for six months applying water to the deciduous trees, and six months applying water to the conifer trees, thereby allowing additional time for the degradation of accumulated cVOCs, lead to the conclusion that there was no adverse impact to the soils in the phytoremediation system in a worst case scenario and, if all of the extracted groundwater and leachate were air stripped, there was no need for the CTW to operate before the phytoremediation system.

In the original remedial design, the CTW was included to reductively dechlorinate the cVOC compounds. The thinking at that time was that if left untreated and applied to the phytoremediation soils, the level of cVOCs in the soil would increase. This could increase to

levels that would become phytotoxic and affect tree health. The pilot study appears to contradict the earlier assumption. When the consultants examined the available supporting research, they discovered that a significant body of work was available, most of which was published after the Remedy Recommendation Document was prepared, and pointed to successes in cVOC removal in phytoremediation systems by several mechanisms.

Because there was evidence that the CTW was not necessary, the Parties explored the effect eliminating the CTW could have on the remedy. First, elimination provides a simplified treatment process. It removes several control variables and makes the control of the phytoremediation irrigation less complex. It reduces cost by a significant amount, and does not negatively impact the environment. Because the application of the extracted groundwater and leachate will be controlled by a system designed to preclude leaching below the root zone of the trees, as is required for the 1,4-Dioxane, there is no increased risk of causing leaching as a result of this change.

The Parties believe there is sufficient justification to request the change in the remedy, and that the proposed change improves the process, reduces cost, and does not increase the potential environmental risk at the Site. All modifications to an approved remedy have one concern in common. What if the change results in reduced effectiveness allowing a greater impact on the environment? It must be realized that this remedy is somewhat unique. In this instance, any negative impacts can be eliminated quickly by simply diverting flow from the natural treatment system to the mechanical treatment system. Because this remedy was approved with two parallel treatment processes that operate independently, if cVOC levels in the soil were to begin to become elevated, flow could simply be diverted to the mechanical treatment system while a solution is implemented. If there were a need to construct the CTW at some later date, the system being installed has all of the components necessary to make that a relatively simple task that could be accomplished promptly and, most significantly, without adverse impact to the remedial goals. All of the plans and specifications for the CTW were approved by NCDWM in the Mechanical Treatment System Pre-construction Report, and thus construction could begin immediately. The necessary instrumentation, control system capacity and piping are included in the present design for the lift stations and treatment processes being installed. As a result, it would be relatively easy to install the CTW at a later date without interrupting the operation of the mechanical treatment system, or the treatment of the extracted groundwater and leachate.

As a result of these findings the Parties request NCDENR approve a modification to the remedy for the Site to eliminate the CTW from the natural treatment system. The modified treatment system would send the extracted groundwater and leachate through the free organics removal system and metals removal system as was always intended. The original plan was to divert the flow at this point to the CTW if capacity was available. If not, the flow would be directed to the air stripper and then to the advanced oxidation system (PhotoCat[1]).

[1] PhotoCat is a registered trademark of Purifics ES, Inc. of London, Ontario, Canada.

In the proposed modification, the groundwater and leachate would follow the same treatment sequence as before, but the entire flow leaving the metals removal system would be initially directed to the air stripper. After air stripping, the flow will be sent to the phytoremediation system if capacity is available, or to the PhotoCat, and discharged to the City of High Point Eastside Wastewater Treatment Plant, if capacity is not available. In effect, this would use the air stripper as an alternative treatment technology to the CTW when discharging to the phytoremediation system. Testing performed in 2009 by the Parties indicates that the treatment efficiency of the air stripper is approximately equal to that expected with the CTW for cVOCs.

The Parties propose to monitor the cVOC levels in the soil and divert flow from the air stripper inlet to the phytoremediation system, if testing of the soils supports higher cVOC dosing rates. This will have the beneficial effect of maximizing the treatment capacity of the phytoremediation system. It will require the Parties to monitor the cVOC levels in the soil as they stabilize and increase the flow of untreated water until equilibrium is achieved. Attachment 1 includes a proposed sampling plan for monitoring the cVOC concentrations in the soils (Appendix A).

Changes to the Land Use Restriction Requirements

The Parties were required to prepare and record DPLURs as part of the requirements of the RASA. In the SOW, Section I requires that the Parties submit, within 90 days, separate DPLURs and survey plats for the former Seaboard Chemical Corporation facility and the adjacent property owned by Mrs. Maxine Crutchfield and Mr. W. E. Crutchfield (Crutchfield property) located north and east of the Site and across the Randleman Reservoir (formerly the Deep River). Section L-1 of the SOW requires that DPLURs also be filed on the former Riverdale Drive Landfill (Landfill) and the Material Recovery Facility (MRF). All survey plats are required to comply with N.C.G.S. 130A-310.8(a). Upon the Division's approval, the Parties are required to record the survey plats and Declarations within 30 days.

The SOW requires that four separate DPLURs be prepared including one for the MRF, one for the Landfill, one for the Seaboard Site and one for the Crutchfield property. As of this date, the DPLURs for the Landfill and MRF have been prepared and submitted to the NCDWM for review and approval. The Parties responded to questions raised by NCDWM regarding the Landfill and MRF DPLURs, and are awaiting their approval before they are recorded. The Seaboard DPLUR has been approved by NCDWM and subsequently recorded. Only the Crutchfield DPLUR has not been recorded due to the refusal of the property owner.

There have been several extensions of the deadline granted by NCDWM to allow the Parties more time to complete negotiations with the Crutchfields to attempt to reach an agreement that would allow the Parties to record the DPLUR on that property. These negotiations concluded when Steven W. Earp, Esquire, the attorney handling the negotiations for the Parties, received a letter dated November 2, 2010 from James W. Bryan, Esquire, the attorney representing the Crutchfields, informing him that the Crutchfield family had rejected the Parties offer. Mr. Earp wrote Mr. Vance Jackson, P.G. of NCDWM on December 1, 2010 to inform him of the good faith efforts the Parties had made to obtain the Crutchfields' approval, and the

unsuccessful conclusion of negotiations. A copy of that correspondence is attached to this document as Attachment 2.

Neither the State nor the Parties have the ability to compel the Crutchfields to allow a DPLUR to be recorded on their property. Although the Parties negotiated in good faith, made a substantial offer of compensation to the Crutchfields in the form of cash and land, and paid all costs incurred by the Crutchfields, as well as those of their own attorneys and consultants, in the end the Crutchfield's attorney informed the Parties that the family had no interest in further negotiations concerning this matter. They did not make or seek a counter offer and provided no alternative means for continued negotiations. As a result, at this time the Parties are unable to comply with that portion of the requirement in Section I of the SOW that pertains to recording a DPLUR on the Crutchfield property to the north and east of the Site and the Randleman Reservoir. All of the other DPLURs are either recorded, or will be recorded upon approval by NCDWM.

As is pointed out in Mr. Earp's letter (Attachment 2), the Parties strongly believe the Crutchfields' refusal to allow a DPLUR to be recorded on their property should not have any impact on the nature or scope of the approved remedy for several reasons. These include the fact that the remedy provides for pumping at a sufficient rate to prevent contaminants from the Site migrating beneath the Crutchfield property. In addition, the Piedmont Triad Regional Water Authority (PTRWA) buffer encompasses the area north and east of the Reservoir where contaminants have been detected, and the buffer already is subject to stringent development restrictions. No other areas of the Crutchfield property that have been tested show evidence of contamination emanating from the Site, including the existing Crutchfield potable well. The PTRWA property cannot be developed, and the Crutchfield property is already subjected to significant restrictions on development due to the Randleman Reservoir Buffer Rules. Finally, Guilford County, where the Crutchfield property is located, has adopted Well Rules which require that special attention be paid to potable wells that are located within 1,500 feet of known groundwater contamination. The applicable Guilford County Well Rule, Section III (A) (2) is included in Attachment 2. This Rule requires close scrutiny by the Guilford County Health Department of any well permit application that would involve construction of a well between the PTRWA property line and the old house on the Crutchfield property.

Despite their best efforts to obtain permission to record a DPLUR on the Crutchfield property, as a result of the unsuccessful negotiations with the Crutchfield family, the Parties propose to eliminate the requirement for a DPLUR on the Crutchfield property from Section I of the SOW. Instead the Parties propose to notify the Guilford County Health Department of the scope and magnitude of the existing contamination emanating from the Site in the groundwater under the PTRWA property, which is adjacent to the Crutchfield property. The Parties will continue to sample the well clusters located on the PTRWA property north and east of the Site, and monitor for any change that might indicate unanticipated movement of contaminants. In addition, the Parties propose to monitor the use of the Crutchfield property and, if there should be material changes, the Parties will submit a report to NCDWM evaluating whether any new uses should necessitate a change in the approved remedy. In addition, should the Crutchfields sell the property, the Parties will attempt to negotiate the recording of the appropriate DPLURs with

the new owner. The Parties are confident the existing restrictions, coupled with their notification of the Guilford County Health Department of the location and magnitude of the contamination on the PTRWA property, and the Parties monitoring of changes in usage of the property, are sufficiently protective of human health and the environment to be an effective alternative to a DPLUR being recorded on the property at this time.

Conclusion

Section 5B of the SOW provides that amendments or modifications to the SOW, to the implementation schedule set forth in the SOW, or the reports or plans submitted pursuant to the SOW shall be implemented through Technical Memoranda submitted by the Responsible Parties and approved in writing by the NCDENR Division of Waste Management. The Parties believe the requested changes in the approved remedy to be modifications to the plans submitted in the Mechanical System Pre-construction Report, which were submitted pursuant to Section A-1 of the SOW in the case of the CTW, and to the Section I of the SOW in the case of the DPLURs. The Parties request approval of these modifications to the proposed remedy. If there are any questions, or if we may be of any further assistance on this matter, please feel free to contact Jim LaRue at (281) 431-3571 or Gary Babb at (919) 325-0696.

Respectfully,

SEABOARD GROUP II AND CITY OF HIGH POINT

James C. LaRue
Oversight Consultant
Attachment 1 - Technical Memorandum Report
Attachment 2 - Smith Moore Leatherwood letter with all attachments

URS

Proposal to Change the Long-Term Recovered Groundwater Treatment Strategy Former Seaboard Chemical Corporation and Riverdale Drive Landfill Project

Jamestown, North Carolina

Technical Memorandum E-3
Attachment 1
Technical Memorandum Report

Prepared by:
Ari Ferro, PhD
URS Corporation
1600 Perimeter Park Drive
Suite 400
Morrisville, NC 27560
Phone: 919.461.1469

February 7, 2011

Table of Contents

1.0 Executive Summary 1
2.0 Background 1
3.0 Proposed Change in Long Term Strategy 3
4.0 Results from Phytoremediation Pilot Study 3
4.1 Fate of 1,4-Dioxane 4
4.2 Fate of Other CoCs 4
5.0 Contaminant Removal Processes 4
5.1 Phytovolatilization 5
5.1.1 TSCF. 5
5.1.2 Field data for TCE. 5
5.1.3 Potential Phytovolatilization of CoCs. 6
5.1.4 Competing Processes. 6
5.2 Rhizodegradation 7
5.2.1 Dechlorination of cVOCs in the Rhizosphere. 7
5.2.2 TCE Mineralization in Soils Planted with Loblolly Pine. 8
5.3 Cometabolism 8
5.3.1 Potential for CoCs. 8
5.3.2. Facilitation by Plants. 8
6.0 References 9
Appendix A – Monitoring Plan 22

List of Tables

Table 1 - Analytical Data for CoCs 11
Table 2 - Results from Phytoremediation Pilot Study 12
Table 3 - Estimated TSCF Values for the CoC 13

List of Figures

Figure 1 - Pressure Chamber for TSCF Measurement 14
Figure 2 - TSCF Values vs. Log K_{OW} for Organic Compounds 15
Figure 3 - TSCF Field Measurement System 16
Figure 4 - Aerobic Chlorobenzene Biodegradation. 17
Figure 5 - Test Cell Used for Rhizodegradation Studies 18
Figure 6 - Test System for [^{14}C]TCE Studies 19
Figure 7 - Mineralization of [^{14}C]TCE in Soil Planted with Loblolly Pine 20
Figure 8 - Co-metabolic Pathways for cVOCs 21

1.0 Executive Summary

The Randleman Reservoir is down gradient of a plume of contaminated groundwater originating from the former Seaboard Chemical Facility and the City of High Point Riverdale Drive Landfill. Groundwater contaminants include 1,4-dioxane and a mixture of chlorinated volatile organic compounds (cVOCs), collectively referred to as the contaminants of concern (CoCs). Groundwater recovery wells will hydraulically contain the plume and prevent it from migrating into the Reservoir, and in the short term, recovered groundwater will be routed to a physical treatment system to remove the CoCs. An air stripper will remove the cVOCs and an advanced oxidation system will remove the 1,4-Dioxane.

In the long term, as described in the Scope of Work, the recovered groundwater would be routed first to a two-component natural treatment system consisting first of a constructed wetland for removal of the cVOCs. Effluent from the wetland would be routed to the phytoremediation system via a drip-irrigation system for the removal of 1,4-dioxane. The 30-acre phytoremediation system is currently becoming established on the City of High Point Landfill, and data from the Pre-Construction Report (PCR, ref. 14) demonstrated that 1,4-dioxane could be effectively removed by such a system.

The Seaboard Group II and the City of High Point propose to change the long-term strategy for removing CoCs from the recovered groundwater. The proposed change is to eliminate the wetland and to use the air stripper continuously, if necessary, for the removal of cVOCs. However, the continuous and/or maximal operation of the air stripper may not be necessary. Preliminary data from a phytoremediation pilot study, as well as reports in the literature, suggest that the phytoremediation system on the landfill may effectively remove all of the CoCs, the cVOCs as well as the 1,4-dioxane. Therefore, the Seaboard Group II and the City of High Point propose to gradually reduce the operation of the air stripper and simultaneously monitor the potential accumulation of CoCs in the root-zone soil of the phytoremediation system. The objective would be to find a balance between the rates of CoC removal and addition of CoCs via irrigation.

In this document, preliminary evidence is presented from the phytoremediation pilot study indicating that the CoCs, in addition to 1,4-dioxane, were effectively removed in the root-zone soil. Evidence from the literature is presented supporting the conclusion that not only 1,4-Dioxane but also all of the other CoCs can be effectively phytovolatilized. In addition, evidence is presented that all of the CoCs can be biodegraded in soil and that within the phytoremediation system on the landfill these bio-degradative processes probably will be enhanced both by plant-specific processes (the “rhizosphere effect”) and by co-metabolic processes, specifically the methane mono-oxygenases of methanotrophic bacteria.

2.0 Background

A plume of contaminated groundwater originates from the former Seaboard Chemical Corporation site (Seaboard), as well as from the closed City of High Point Riverdale Drive Landfill (landfill). The plume contains a mixture of volatile organic compounds (VOCs) including

1,4-dioxane. A series of groundwater recovery wells, pumping at the combined rate of approximately 50 gpm year round, will hydraulically contain the plume and prevent it from migrating down-gradient into the Randleman Reservoir. The existing leachate recovery system will continue to collect landfill leachate from portions of the landfill.

In September 2005, the North Carolina Division of Waste Management approved the conceptual design of a remedial action system at the former Seaboard site and the landfill. It is expected that long-term containment of the plume will be required (i.e., 30 years or longer).

Analytical data for the contaminants of concern (CoCs) in a specific mixture of recovered groundwater and landfill leachate are presented in Table 1. The CoCs are a complex mixture of organic compounds, including chlorinated ethenes and ethanes, other volatile organics (most notably, chlorobenzene) and 1,4-dioxane (dioxane).

In the *short term* the recovered groundwater and landfill leachate will pass through an on-site physical treatment system (PTS). The PTS consists of a free form organics removal system, a metals removal system, an air stripper (to remove volatile organic compounds) and an advanced oxidation ("PhotoCat®") system to remove 1,4-dioxane. With the exception of dioxane, air stripping is very effective for removal of the CoCs from the water phase (Table 1). Note that while 1,4-dioxane is a volatile organic compound (vapor pressure, 5 kPa at 25°C), its removal from the recovered groundwater via air stripping would be relatively ineffective because of the compound's physiochemical properties. Dioxane has a low Henry's Law constant (4.9 x 10^{-4} kPa-m^3/mol) and high water solubility (it is miscible in water).

In the *long term*, the recovered groundwater and leachate will be routed to a natural treatment system. As originally proposed in the 2005 Remedy Recommendation Document, the natural treatment system would have two components. The first component would be a constructed wetland for the removal of the majority of VOCs, including the chlorinated volatile organic compounds (cVOCs). The wetland would be an approximately 2.0 acre upward vertical flow system that would remove cVOCs via anaerobic microbial dechlorination. Because of its physiochemical characteristics (log K_{ow} = -0.27), the dioxane would predictably pass untreated through the wetland system.

The second component of the natural treatment system is an approximately 30-acre phytoremediation system currently becoming established on the City of High Point Landfill soil cover (14). The phytoremediation system is designed to be drip-irrigated with treated effluent from the PTS or wetland. The 1,4-dioxane would be phytovolatilized, a process in which the compound is taken up by the roots of the trees, translocated to the shoots, and exits the plant via the transpiration gas. Once in the atmosphere, the 1,4-dioxane would be rapidly photo-degraded into harmless decomposition products. As discussed in the Pre-Construction Report (PCR, ref.14) submitted to the North Carolina Department of Environment and Natural Resources (DENR), the phytoremediation system will be drip-irrigated in such a way that leachate formation (i.e., percolation of contaminated water below the root zone of the trees) will be minimal. The PCR also demonstrated, in a pilot-scale project, that the phytovolatilization of 1,4-dioxane is an effective removal process.

3.0 Proposed Change in Long Term Strategy

The Seaboard Group II and the City of High Point (Parties) propose to change the long-term strategy for treatment of the recovered groundwater and leachate. The proposed change is to eliminate the constructed wetland from the natural treatment system. In lieu of the wetland, it is proposed that the air stripper component of the PTS be used indefinitely, if it is necessary, and effluent from the air stripper routed to the phytoremediation system via the drip-irrigation system. As discussed above, air stripping is very effective for the removal of all of the CoCs except 1,4-dioxane for which phytovolatilization is an effective removal process.

However, the continuous or maximal operation of the air stripper may not be necessary. Preliminary data from a phytoremediation pilot study, as well as reports in the literature, suggest that a variety of contaminant removal processes will come into play when the phytoremediation system is irrigated with contaminated groundwater, and that the CoCs (in addition to dioxane) could be effectively removed. Therefore, the Parties propose to gradually reduce the operation of the air stripper as the phytoremediation system becomes acclimated to the groundwater and leachate and simultaneously monitor the potential accumulation of the CoCs (other than 1,4-dioxane) in the root-zone soil of the phytoremediation system. A preliminary proposal of the monitoring protocol is included as Appendix A of this document. The objective would be to find the balance between the rates of contaminant removal and contaminant addition via the irrigation system. Thus, for example, if over a given quarter the extent of CoC removal via air stripping is reduced by half and the concentrations of CoCs do not change in the landfill cover soils, the tentative conclusion would be that the rates of contaminant removal and addition were balanced for that quarter.

One main purpose of this document is to outline the nature and effectiveness of the contaminant removal processes that potentially would occur if the phytoremediation system were irrigated with groundwater and leachate containing the CoCs. The most important of these include the plant-specific processes of phytovolatilization and rhizodegradation. In addition, the co-metabolism of the CoCs induced by methane gas probably would be a key removal process.

4.0 Results from Phytoremediation Pilot Study

A pilot-scale phytoremediation study was conducted on the west lobe of the landfill to test the feasibility and effectiveness of the 30-acre phytoremediation system. The study involved five small study plots: a stand of hybrid poplar trees, a stand of Japanese black pine (JBP), a mixed conifer stand (loblolly and Virginia pine), a mixed hardwood stand (willow oak and Chinese elm) and a control plot with no trees. During a 10-week study period in the summer of 2010 (June 4 through August 16) the study plots were regularly irrigated with groundwater obtained from recovery well PW-DR1 containing 1,4-dioxane (2 to 3 mg/L) and the other CoCs. This groundwater was not pre-treated or altered in any manner prior to its used for irrigation of the pilot plots. The principal objective of the pilot study was to assess the efficacy of the phytovolatilization treatment mechanism for 1,4-dioxane. The results are summarized below and in a Pilot Study Report that is included in the PCR (14).

4.1 Fate of 1,4-Dioxane

All of the tree species were very effective at 1,4-dioxane uptake. The study suggested that on average greater than 80% of the 1,4-dioxane added to the plots during the study period was removed. The most likely dioxane removal process was phytovolatilization although other processes, such as biodegradation in the root-zone soil, or volatilization from the soil surface, could not be ruled out. The results of the pilot study for 1,4-dioxnae were reported in Appendix A of the PCR (14).

4.2 Fate of Other CoCs

Analysis of soils from the study plots for CoCs (other than 1,4-dioxane) was carried out in December 2010 after the main phase of the pilot study had been completed. A total of 16 soil samples were collected from the five study plots mentioned above. The concentrations of all of the CoCs were below the analytical detection limit in each of the soil samples, with the following exception: one soil sample from the poplar plot (A-2) contained low levels of *cis*-1,2-DCE and one sample from the mixed hardwood stand (CE-1) contained traces of chlorobenzene. The analytical data for *cis*-1,2-DCE and chlorobenzene in soil samples from the four study plots that contained trees are summarized in Table 2.

Chlorobenzene and *cis*-1,2-DCE probably were the CoCs present in highest concentration in the irrigation water. Table 2 indicates the total mass of these compounds added to each of the four tree plots during the 10-week study period (6/4 to 8/16/10). Although traces of these compounds remained in two of the soil samples, the various contaminant removal processes had evidently resulted in roughly a 500-fold reduction in concentration over the period from mid-August to mid-December (the period between the end of the main phase of the pilot study and the 12/10 soil sampling event). It should be noted that the groundwater used to irrigate the study plots had a concentration of cVOCs approximately 100-fold higher than the anticipated concentration of cVOCs in the air stripper effluent.

5.0 Contaminant Removal Processes

The contaminant removal processes that are likely to occur when the phytoremediation system on the landfill is irrigated with water containing CoCs will be discussed in this Section. Three main contaminant removal processes will be discussed in detail:

- *Phytovolatilization.* As indicated by the phytoremediation pilot study, phytovolatilization was the most likely removal process for 1,4-dioxane. Literature will be reviewed in this Section suggesting that phytovolatilization also should be effective for the removal of the other CoCs.
- *Rhizodegradation.* Technical publications will be reviewed indicating that rhizodegradation may be very effective for the removal of the CoCs.
- *Cometabolism.* Methane gas generated by the anaerobic degradation of the waste material can stimulate the co-metabolic degradation of the CoCs by soil microbes.

5.1 Phytovolatilization

The plants can take up various dissolved VOCs from the soil water. The compounds can be translocated from the roots to the shoots of the trees via the transpiration stream. In the shoots, the compounds can volatilize into the atmosphere along with the transpiration gas. One important route of exit can be through pores on the leaves, referred to as the stomata.

As reviewed in detail in the Sections below, the ability of plants to take up organic compounds is measured by the transpiration stream concentration factor (TSCF). A new laboratory method for measuring a TSCF revealed a sigmoidal relationship between TSCF and log K_{ow} and therefore the log K_{ow} of an organic compound can be used to predict the extent of plant uptake. For volatile organics, uptake is the first step in the process of phytovolatilization. TCE is one volatile organic for which there is good field-data for phytovolatilization. Many of the CoCs have log K_{ow} values very similar to that of TCE, and therefore, phytovolatilization of CoCs is a potential removal process.

Processes in the soil or plant tissue that degrade or transform CoCs can reduce the phytovolatilization of their CoCs. However, phytovolatilization is only one contaminant removal process and the competing processes are still highly beneficial because they too remove CoCs in the phytoremediation system.

5.1.1 TSCF.

The transpiration stream concentration factor (TSCF) is the ratio of concentrations of a compound in the xylem to that in the solution adjacent to the root. The TSCF is commonly used to describe the relative ability of an organic compound to be passively transported from the root to the shoot. Chemicals that move into the plant at the same rate as water have TSCF values of one. Compounds that are totally excluded from uptake have TSCF values of zero.

Dettenmaier et al. (2009) used a pressure chamber technique with two plant species (soybean and tomato) to measure the TSCFs for 25 organic chemicals ranging in log K_{ow} from -0.8 to 5 (**Figure 1**). A nearly sigmoidal relationship between TSCF and log K_{ow} was obtained (**Figure 2**). Based on these data an empirical relationship between TSCF and log Kow was presented:

$$\mathrm{TSCF} = \frac{11}{11 + 2.6^{\log K_{ow}}} \qquad \textit{Equation 1}$$

In the pressure chamber system described by Dettenmaier et al. (2009), TSCF = 0.43 for TCE. Using *Equation 1* for TCE, TSCF = 0.52.

5.1.2 Field data for TCE.

Phytovolatilization of chlorinated solvents was evaluated at a contaminated field site containing mature trees at the Hill Air Force Base site in Utah (Doucette, et al. 2003). Three tree species (poplar, Russian olive, and willow) were established near a seep containing 0.3 to 5.6 mg/L TCE. The apparatus depicted in Figure 3 was used to measure TCE in the transpiration gas. The concentration of TCE in the transpiration gas: 2.2 mg/L for poplar, 0.35 mg/L for Russian olive, and 0.8 mg/L for willow.

5.1.3 Potential Phytovolatilization of CoCs.

Because of the evidence in natural systems that TCE can undergo phytovolatilization, the results for TCE are important in assessing the potential phytovolatilization in the Seaboard phytoremediation system for the CoCs. The CoCs of highest concentration in the recovered groundwater plus leachate all have TSCF values estimated by *Equation 1* that are nearly the same as that for TCE (**Table 3**). This similarity in TSCF values compared with TCE, coupled with the fact that TCE can readily undergo phytovolatilization in the field, strongly suggests that the CoCs can potentially be phytovolatilized in the Seaboard phytoremediation system.

5.1.4 Competing Processes.

In order for VOCs to be phytovolatilized, they must be taken up as the parent compound from the soil solution and translocated (via the xylem) to the shoots. Processes in the soil or plant tissue that degrade or transform the parent compound can reduce phytovolatilization. However, phytovolatilization is only one contaminant removal process and the competing processes are still highly beneficial because they too remove CoCs in the phytoremediation system. These competing processes are listed below and will be described later in more detail.

- Biodegradation in the soil;
- Plant enhanced biodegradation (rhizodegradation, Section 5.2);
- Cometabolism in the soil (Section 5.3)
- Plant metabolism (transformation by plant enzymes);
- Degradation by endophytes (bacteria that reside in the xylem of trees).

Reports suggest that all of the CoCs listed in Table 1 can be biodegraded in aerobic soil. Field and Sierra-Alvarez (2004) reviewed the extensive literature for biodegradation in soils of chlorinated ethanes (1,1,1-TCA, 1,1-DCA, etc.) and the chlorinated ethenes (1,1-DCE, *cis*- and *trans*-1,2-DCE and vinyl chloride). Langenhoff et al. (2002) reported the aerobic microbial degradation of chlorobenzene (Figure 4). Parales et al. (1994) described an actinomycete isolated from sludge capable of sustained aerobic growth on 1,4-dioxane, and mineralization of the contaminant.

After plant uptake, enzymes in the plant tissue can transform certain organic compounds. For VOCs most studies have been carried out with TCE. Newman et al. (1997) studied the uptake of TCE in hybrid poplar and transformation into trichloroethanol, trichloroacetic acid (TCAA) and dichloroacetic acid. Studies with axenic poplar tumor cells suggested that these metabolic products were products of plant metabolism, not microbial degradation in the rhizosphere (and subsequent uptake by the plants). However, the concentration of these metabolic products was very low relative to the TCE dose. Strycharz and Newman (2009) subsequently investigated TCE uptake and metabolism of TCE by native southeastern conifers including loblolly pine. After trees were exposed to a relatively high dose of TCE (50 to 150 mg/L) for 2 months in the greenhouse, trace levels of TCAA was detected in the leaves of piedmont loblolly pine.

Degradation of contaminants within plant tissue is generally attributed to plant enzymes, but may in some cases involve endophytic bacteria. Endophytes are found in symbiotic association with higher plants where they can inhabit, for example, the xylem of trees. Weyens et al.

(2009) carried out the *in situ* inoculation of poplar trees growing on a TCE contaminated site with a TCE-degrading strain of endophyte (*Pseudomonas putida* W619-TCE). Inoculation reduced TCE phytovolatilization by 90% under field conditions.

5.2 Rhizodegradation

The rhizosphere is the zone of soil influenced by plant roots, and the basis for the rhizosphere is plant root exudates. Approximately 20 percent of the plant's photosynthate is exuded into the soil in the form of sugars, organic acids, sloughed-off cells, mucilaginous material, etc. These carbon-containing compounds are a food source for microorganisms and as a result there is a 100- to 1000-fold increase in metabolically active microbes (bacterial and fungi) in rhizosphere soil relative to unplanted soil. These microbes can degrade a wide range of organic contaminants, and there is a considerable literature demonstrating that the rate of contaminant degradation is enhanced in rhizosphere soil compared to unplanted soil. Both aerobic and anaerobic microbial degradative processes can occur in the rhizosphere. Anaerobic micro-sites can arise in the root zone as a result of root respiration coupled with the aerobic microbial degradation of plant root exudates.

5.2.1 Dechlorination of cVOCs in the Rhizosphere.

James et al., 2009, conducted a mass balance study for PCE in a lined outdoor test bed planted with hybrid poplar (Figure 5). Solutions of PCE were added via the test well at concentrations ranging from 7 to 14 mg/L. Mass balance analyses indicated that the mass of chlorinated ethenes in the effluent water was reduced by 99%, and over 95% of the recovered chlorine was free chloride in the soil. Data suggested that reductive dechlorination in the soils of the test bed resulted in the transformation of PCE to TCE, cis-DCE and VC. The mass of chlorine added to the test bed as PCE (9.2 mol Cl) closely matched the mass accumulated in the soil (10.5 mol Cl). James et al., 2009, speculated that the rhizosphere of the trees was sufficiently reducing to support microbial reductive dehalogenation in anaerobic zones created by the combination of plant root metabolism and the aerobic degradation of root exudates.

The results of James et al. (2009) may be relevant to the phytoremediation system on the landfill. The root zone soil for the phytoremediation system will be maintained under relatively moist conditions (ref. 14), tending to enhance the creation of anaerobic micro-sites in the root zone. Thus, the rhizosphere of the trees will likely be sufficiently reducing to support reductive dehalogenation of cVOCs.

The same experimental set-up used by James et al. (2009) previously was used for experiments with TCE (Newman et al., 1999) and very similar results were obtained. Over the test period, the trees were able to remove over 99% of the added TCE (~14 mg/L). Little of the TCE was phytovolatilized, but chloride ion increased in the soil in amounts that approximately corresponded to TCE loss. In unplanted test beds, ~95% of the added TCE was recovered in the effluent water.

5.2.2 TCE Mineralization in Soils Planted with Loblolly Pine.

Anderson and Walton (1994) compared the rate of mineralization of [^{14}C]TCE in planted and unplanted soils using the experimental system depicted in **Figure 6**. Soils were obtained from a contaminated field site. One of the plant species tested was loblolly pine (*Pinus taeda*). The rate of mineralization of TCE was enhanced in systems planted with loblolly pine, compared to unplanted soil (**Figure 7**). Radiolabel was detected in the tissue of loblolly pine. The root tissue contained 8.8% of the total recovered radiolabel; leaf tissue, 4.5%; stems, 1.3%. The study showed that the rhizosphere provides a favorable environment for microbial degradation of organic compounds and that vegetation (especially loblolly pine) may play an important role in enhancing biological remediation of contaminated surface soils

5.3 Cometabolism

Cometabolism is the process by which a microbe transforms an organic compound that it is unable to use as a source of energy or as a growth substrate (ref. 13). The mechanistic basis for cometabolism is relaxed substrate specificity: The microbial enzymes are not highly substrate specific and can act on structurally related substrates. Such enzymes carry out a single type of reaction on somewhat dissimilar molecules.

An important example of an enzyme with relaxed substrate specificity is the methane monooxygenase (MMO) of aerobic methanotrophic bacteria. MMOs initiate the oxidation of methane: One atom of oxygen from O_2 is incorporated into methane to yield methanol that is further oxidized to formaldehyde and formic acid to CO_2.

5.3.1 Potential for CoCs.

Cometabolism of the CoCs by methanotrophic bacteria is likely to be an important fate mechanism in the phytoremediation system on the landfill. Methane gas is produced in the landfill by the degradation of the waste by methanogens, obligate anaerobic bacteria that are capable of reducing carbon dioxide to methane. The methane gas diffuses into the root-zone soil of the tree stands, and methanotrophic bacteria reportedly proliferate in the plant root zone.

Microbial MMOs fortuitously oxidize various chlorinated alkanes, alkenes, and aromatics (Field and Sierra-Alvarez, 2004). The chlorinated alkenes (including *cis*- and *trans*-1,2-DCE and 1,1-DCE) are converted into unstable epoxides that quickly and non-enzymatically rearrange to yield chlorinated acids and other transformation products (Figure 8). In soil, the transformation products are mineralized by accompanying heterotrophs. Rapid co-oxidation by MMOs also has been reported for 1,1-DCA and 1,2-DCA. The cometabolic pathways for 1,1,1-TCA are presented in Figure 8.

5.3.2. Facilitation by Plants.

The activity of methanotrophic bacteria is limited by the availability of oxygen in the soil. Bohn et al. (2010) used soil columns to investigate the extent that vegetation can improve soil aeration and maintain the methane oxidation process. The oxidation potential was strongly diminished in unplanted soil columns, whereas the planted columns showed enhanced

methane oxidation. The root system of the plants formed secondary macro-pores and amplified the air diffusivity and sustained oxygen supply. Reichenauer, et al, (2010) measured methane emissions on a landfill using lysimeters. Different vegetative covers were compared with bare soil. Plants were found to be essential for a sustainable reduction in methane concentrations, whereas in bare soil methane oxidation declined after six weeks.

6.0 References

1. Anderson. T.A. and B.T. Walton. 1995. Comparative Fate of [^{14}C]Trichloroethylene in the Root Zone of Plants from a Former Solvent Disposal Site. Environmental Toxicology and Chemistry 14:2041-2047
2. Bohn, S., P. Brunke, J. Gebert, and J. Jager. 2010. Improving the Aeration of Critical Fine-grained Landfill Top Cover Material by Vegetation to Increase the Microbial Methane Oxidation Efficiency. Waste Management (*in press*).
3. Dettenmaier, E.M., W.J. Doucette, and B. Bugbee. 2009. Chemical Hydrophobicity and Uptake by Plant Roots. Environ. Sci. Technol. 43: 324-329.
4. Doucette, W.J., B.G. Bugbee, S.C. Smith, C.J. Pajak, and J.S. Ginn. 2003. Uptake, Metabolism, and Phytovolatilization of Trichloroethylene by Indigenous Vegetation: Impact of Precipitation. *In:* Phytoremediation Transformation and Control of Contaminants (Eds. S.C. McCutcheon and J.L. Schnoor). J. Wiley & Sons, Inc., Publication
5. Field, J. A and R. Sierra-Alvarez. 2004. Biodegradability of Chlorinated Solvents and Related Chlorinated Aliphatic Compounds. Science Dossier. Euro Chlor.
6. James, C.A., G. Xin, S.L. Doty, I. Muiznieks, L. Newman, and S.E. Strand. 2009. A Mass Balance Study of the Phytoremediation of Perchloroethylene-Contaminated Groundwater. Environ Pollut. 157: 2564-2569.
7. Langenhoff, A.A.M., J.J.M. Staps, C. Pijls, A. Alphenaar, G. Zwiep, and H.H.M. Rijnaarts. 2002. Intrinsic and Stimulated *In Situ* Biodegradation of Hexachlorocyclohexane (HCH). Water, Air, and Soil Pollution: Focus 2:171-181.
8. Newman, L.A., S.E. Strand, N. Choe, J. Duffy, G. Ekuan, M. Ruszaj, B.B. Shurtleff. J. Wilmoth, P. Heilman, and M.P. Gordon. 1997. Uptake and Biotransformation of Trichloroethylene by Hybrid Poplars. Environ. Sci. Technol. 31:1062-1067.
9. Newman, L.A., X. Wang, I.A. Muiznieks, G. Ekuan, M. Ruszaj, R. Cortellucci, D. Domroes, G. Karscig, T. Newman, R.S. Crampton, R.A. Hashmonay, M.G. Yost, P.E. Heilman, J. Duffy, M.P. Gordon, and S.E. Strand. 1999. Remediation of Trichloroethylene in an Artificial Aquifer with Trees: A Controlled Field Study. Environ. Sci. Technol. 33:2257-2265.
10. Parales, R.E., J.E. Adamus, N. White, and H.D. May. 1994. Degradation of 1,4-Dioxane by an Actinomycete in Pure Culture. Applied and Environmental Microbiology 60:4527-4530.

11. Reichenauer, T.G., A. Watzinger, J. Riesing, and M.H. Gerzabek. 2010. Impact of Different Plants on the Gas Profile of a Landfill Cover. Waste Management (*in press*).

12. Strycharz, S. and L. Newman. 2009. Use of Native Plants for Remediation of Trichloroethylene: II. Coniferous Trees. International J. of Phytoremediation 11:171-186.

13. Suthersan, S.S. 2002. Natural and Enhanced Remediation Systems. Lewis Publishers.

14. URS. Phytoremediation System Preconstruction Report Former Seaboard Chemical/Riverdale Drive Landfill Project Jamestown, North Carolina. October 25, 2010.

15. Weyens, N., D. Van Der Lelie, T. Artois, K. Smeets, S. Taghavi, L. Newman, R. Carleer, and J. Vangronsveld. 2009. Bioaugmentation with Engineered Endophytic Bacteria Improves Contaminant Fate in Phytoremediation. Environ. Sci. Tech. 43:9413-9418.

Table 1 - Analytical Data for CoCs

Analyte concentrations (before and after air stripping) for the mixture of groundwater (recovered from PW-DR1) and landfill leachate used in Day 9 (5/13/09) of the Purifics pilot study. Analyte concentrations were higher on Day 9 than on any of the other study days (3/18, 3/19, 4/7/ 4/8, 4/16, 4/28, and 4/29/09). Table also indicates percent removed by air stripping in the system used by Purifics. Chlorinated ethenes are listed in blue; chlorinated ethanes in red; other volatile organics in green.

Analyte	Influent (5/13/01)	After air-stripper	Removed by stripping
	µg/L	*µg/L*	*%*
PCE	20.8	<1	>95
TCE	<10	<1	>90
1,1-DCE	1,300	5.3	>99
cis-1,2-DCE	5,640	71.3	>98
trans-1,2-DCE	14.5	<1	>93
Vinyl chloride	733	2.3	>99
Total chlorinated ethenes	~7,700	~79	~99
1,1,1-TCA	1,220	8.3	>99
1,1-DCA	2,800	29.6	~99
1,2-DCA	130	3.8	97
Chloroethane	672	4.1	>99
Total chlorinated ethanes	~4,800	~45.8	~99
Chloromethane	33.3	<1	>97
Methylene chloride (Dichloromethane)	15	<1	>93
Benzene	121	1.4	~99
Chlorobenzene	4,180	70.1	~98
Ethylbenzene	22.8	<1	>95
Toluene	233	2.8	~99
Acetone	90.1	7	~92
Vinyl acetate	25.8	<1	>96
1,4-Dioxane	3,030	--	--
Total organics	~20,200	~206	~99

Table 2 - Results from Phytoremediation Pilot Study

Analytical data are presented for *cis*-1,2-DCE and chlorobenzene for root-zone soils in the four study plots that contained trees. Grab samples recovered from 6 inches below ground surface were analyzed using Method 8260-5035. Abbreviations: JBP, Japanese black pine; LP, loblolly pine; VP, Virginia pine; WO, willow oak; CE, Chinese elm. Analytical detection limits indicated by "<". The mass of analyte added to the various plots depended on the volume of irrigation water added to the different plots during the study period (6/4 to 8/16/10).

Study Plot	Sample Name	Recovered (December, 2010)		Added (6/4 through 8/16/10)	
		cis 1,2-DCE	Chlorobenzene	cis 1,2-DCE	Chlorobenzene
		µg/kg	µg/kg	µg/kg	µg/kg
Poplar	A-1	<4.8	<4.8	6,500	4,900
	A-2	**13.2**	<5.7	6,500	4,900
	B-1	<4.9	<4.9	6,500	4,900
	B-2	<4.2	<4.2	6,500	4,900
JBP	C-1	<6.0	<6.0	1,300	1,000
	C-2	<5.0	<5.0	1,300	1,000
Conifer	LP-1	<5.9	<5.9	7,400	5,600
	LP-2	<4.9	<4.9	7,400	5,600
	VP-1	<5.4	<5.4	7,400	5,600
	VP-2	<5.8	<5.8	7,400	5,600
Hardwood	WO-1	<5.3	<5.3	6,000	4,500
	WO-2	<4.7	<4.7	6,000	4,500
	CE-1	<6.6	**8.5**	6,000	4,500
	CE-2	<4.7	<4.7	6,000	4,500

Table 3 - Estimated TSCF Values for the CoC.

The values for TSCF are estimated using Equation 1.

Analyte	Log K_{ow}	TSCF (Eq. 1)	TSCF Measured (Ref. 3)
PCE	3.4	0.30	
TCE	2.42	0.52	0.43
1,1-DCE	1.84	0.65	
cis 1,2-DCE	2.09	0.60	0.51
trans 1,2-DCE	2.09	0.60	0.51
Vinyl chloride	1.48	0.72	
1,1,1-TCA	2.48	0.50	0.44
1,1-DCA	1.79	0.66	
1,2-DCA	1.48	0.72	
Chloroethane	1.43	0.73	
Chloromethane			
Methylene chloride (Dichloromethane)	1.20	0.77	0.46
Benzene	2.13	0.59	0.59
Chlorobenzene	2.90	0.41	
Ethylbenzene			
Toluene	2.70	0.46	0.64
Acetone			
Vinyl acetate			
1,4-Dioxane	-0.27	0.93	0.98

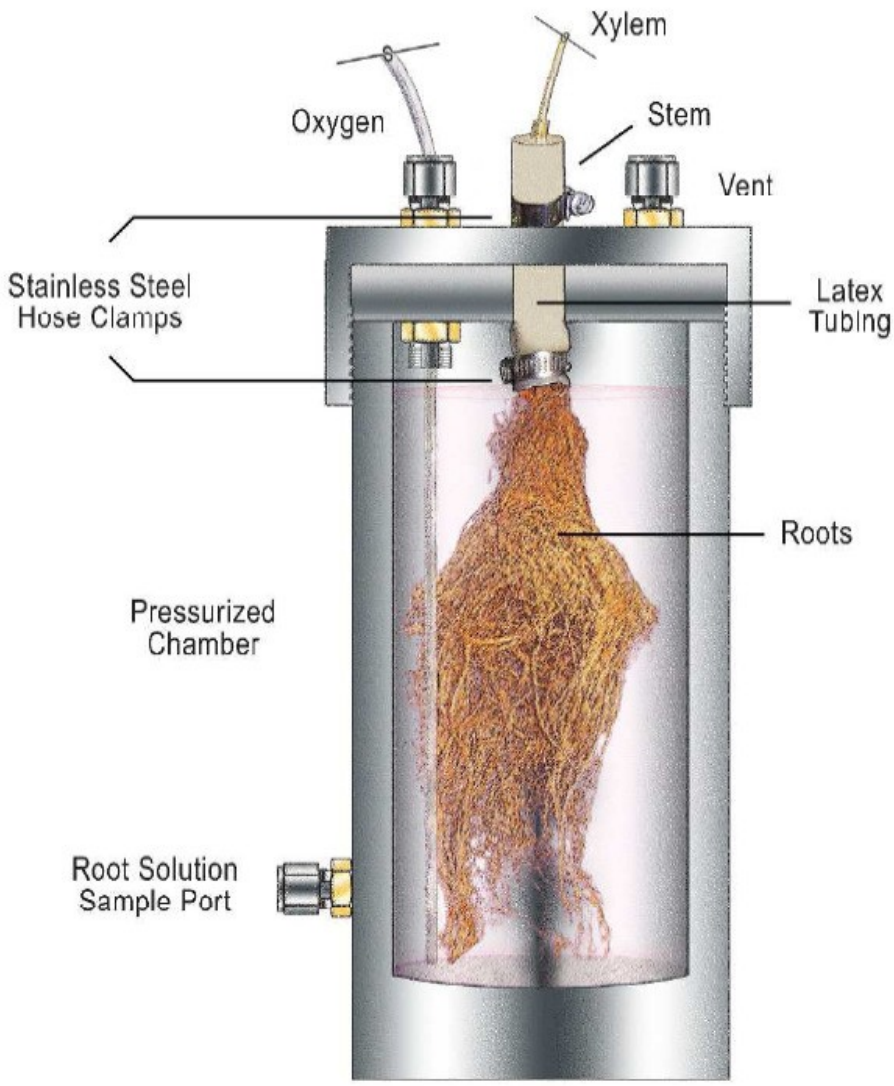

Figure 1 - Pressure Chamber for TSCF Measurement

Soybean or tomato plants grown in hydroponic solution were cut to remove all of the shoot tissue except the base of stem. A gasket was fit over the stem, which was placed in a stainless steel vessel containing oxygen saturated nutrient solution spiked with organic compound. Oxygen pressure in the chamber was increased until a xylem sap flow rate of 70% of the intact plant maximum transpiration rate was reached (~ 150 kPa). Samples of xylem sap exiting the cut stem and root zone exposure solution were collected and analyzed at intervals. Figure taken from Dettenmaier et al., 2009.

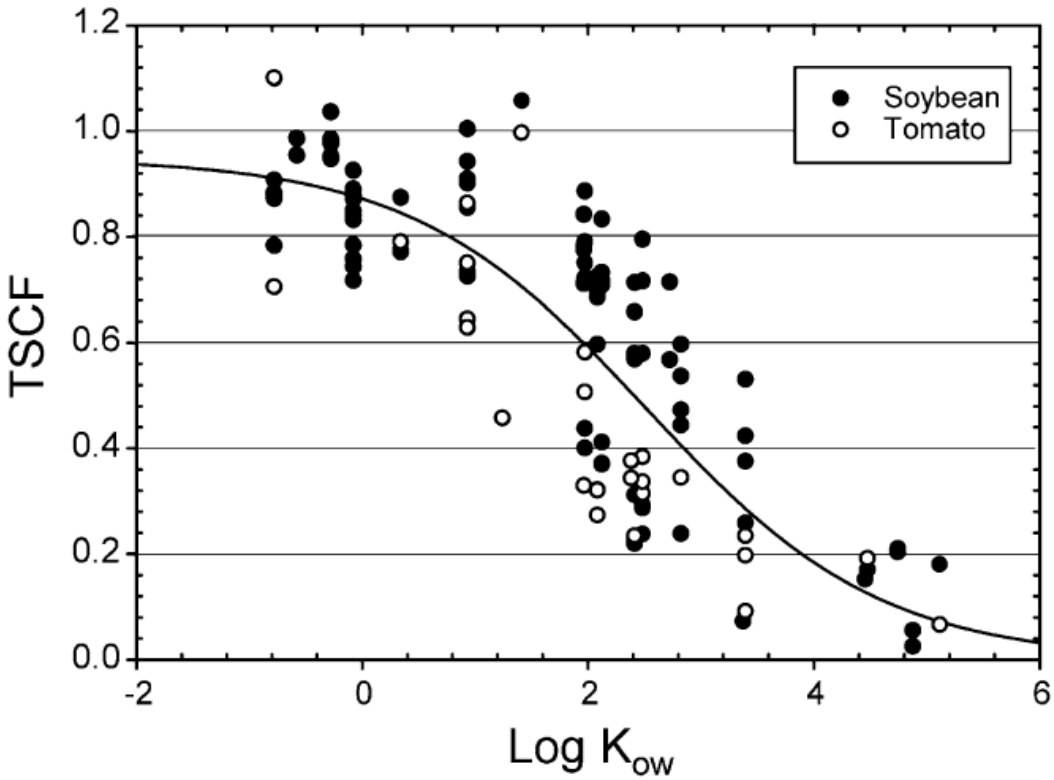

Figure 2 - TSCF Values vs. Log K_{OW} for Organic Compounds

Measurements (118) were performed either in tomato or soybean plants for 25 compounds, $r^2 = 0.68$. Figure taken from Dettenmaier et al., 2009.

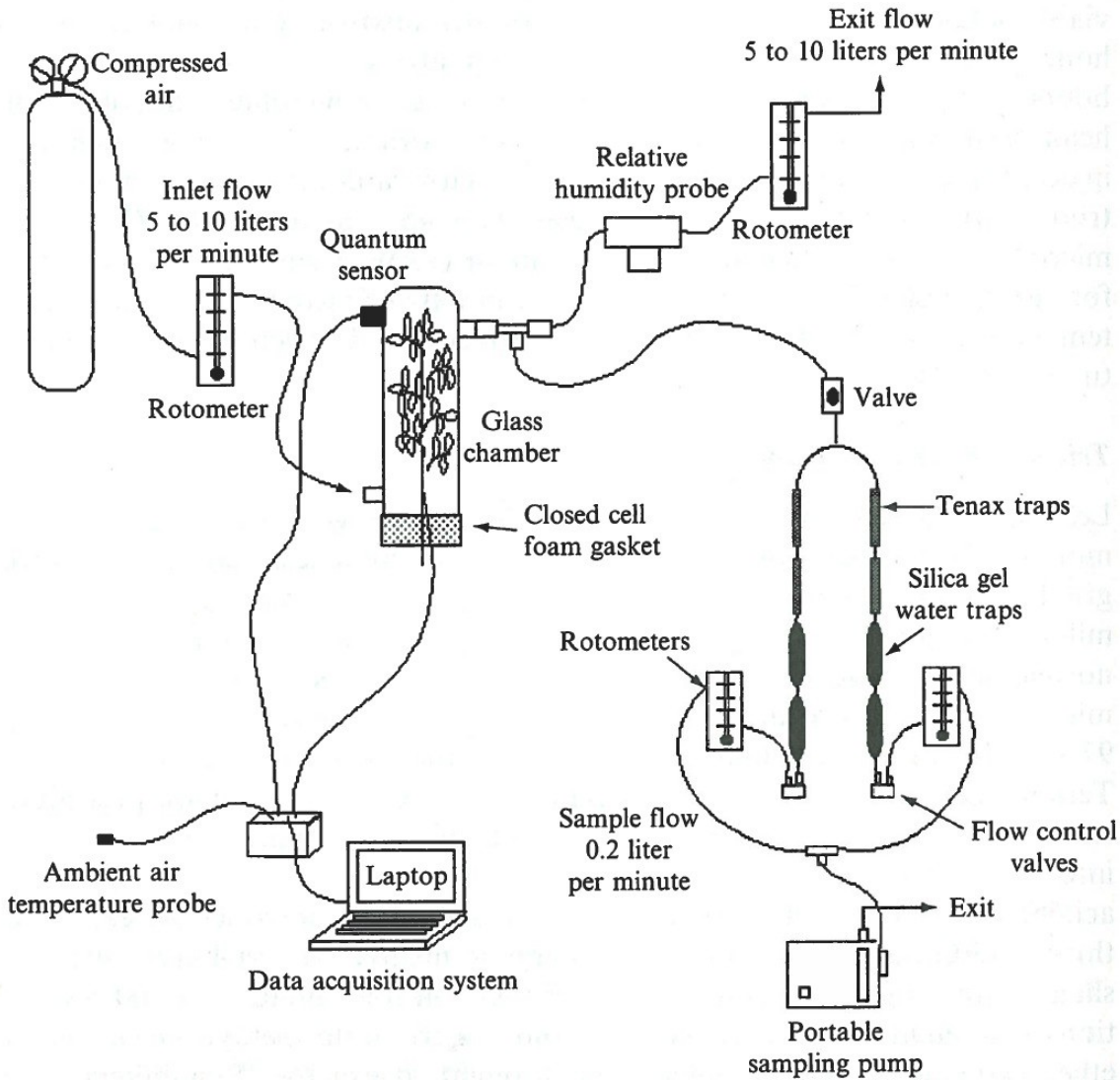

Figure 3 - TSCF Field Measurement System

A glass chamber was placed over a tree branch and sealed with foam. Compressed (TCE-free) breathing air was used to purge the chambers of TCE and water vapor (5-10 L/min). The weight of water collected and volume of effluent passing through the trap was used to calculate the transpiration rate (sampling time, approximately 20 minutes). Transpiration measurements were used to determine the ratio of TCE to water transpired. It was important to maintain sufficient airflow to prevent condensation of transpired water. If water condensed in the chamber, the water flux would decrease, but the TCE flux would not. This condition could result in an overestimation of the TCE concentration in the transpired water. Figure taken from Doucette et al., 2003.

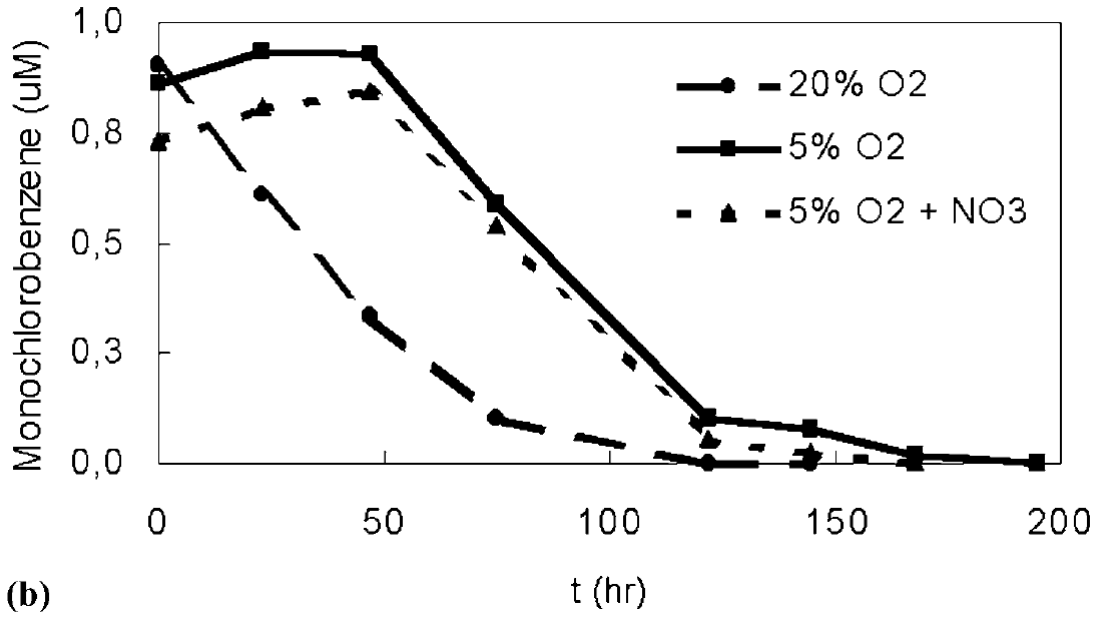

Figure 4 - Aerobic Chlorobenzene Biodegradation.

Laboratory microcosm study with sediments from a site in The Netherlands. Figure taken from Langenhoff et al., 2002.

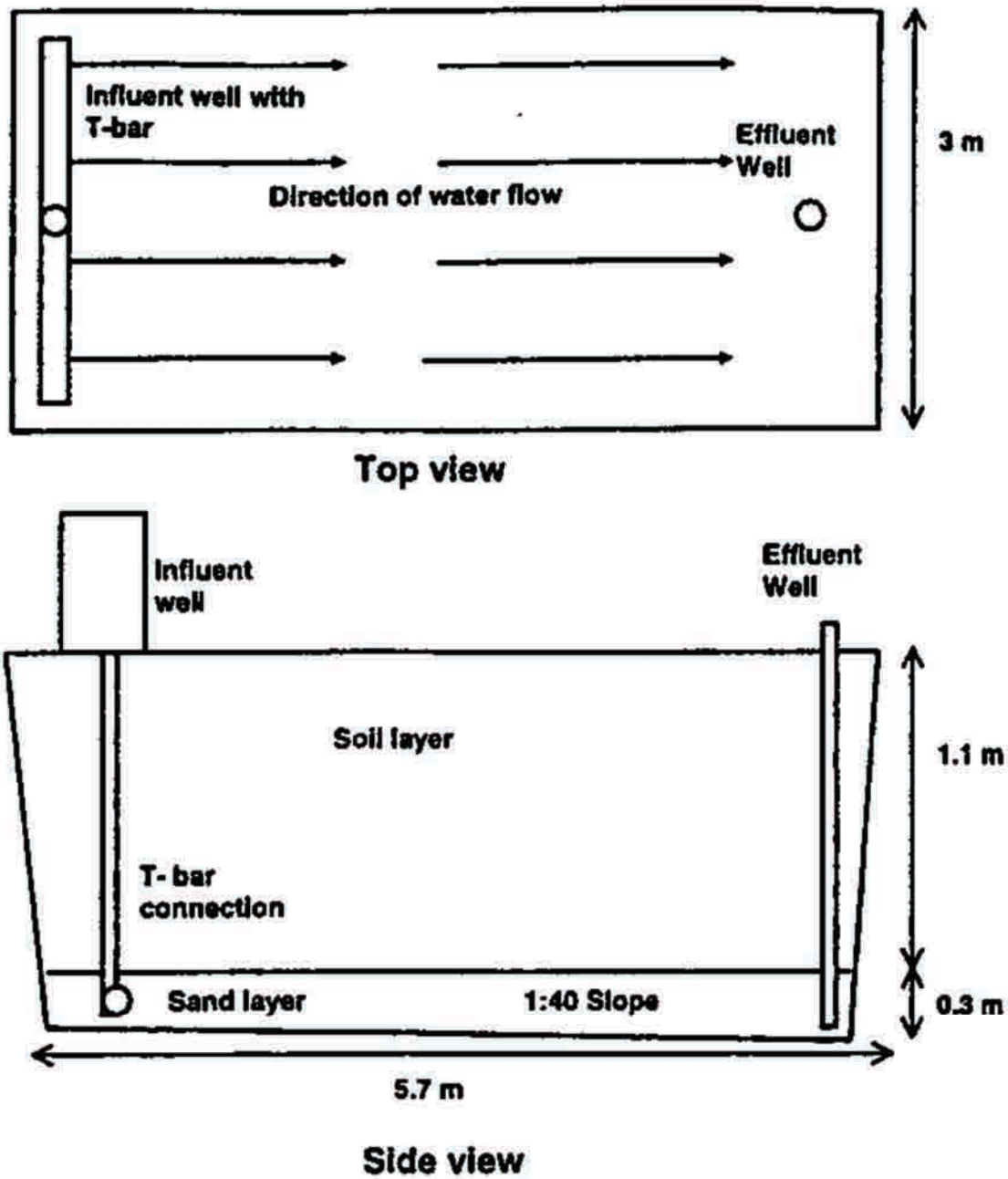
Influent well with
T-bar
Effluent
Well
3 m
Direction of water flow
Top view
Influent
well
Effluent
Well
Soil layer
1.1 m
T- bar
connection
Sand layer
1:40 Slope
0.3 m
5.7 m
Side view

[illegible]

[illegible]

[illegible]

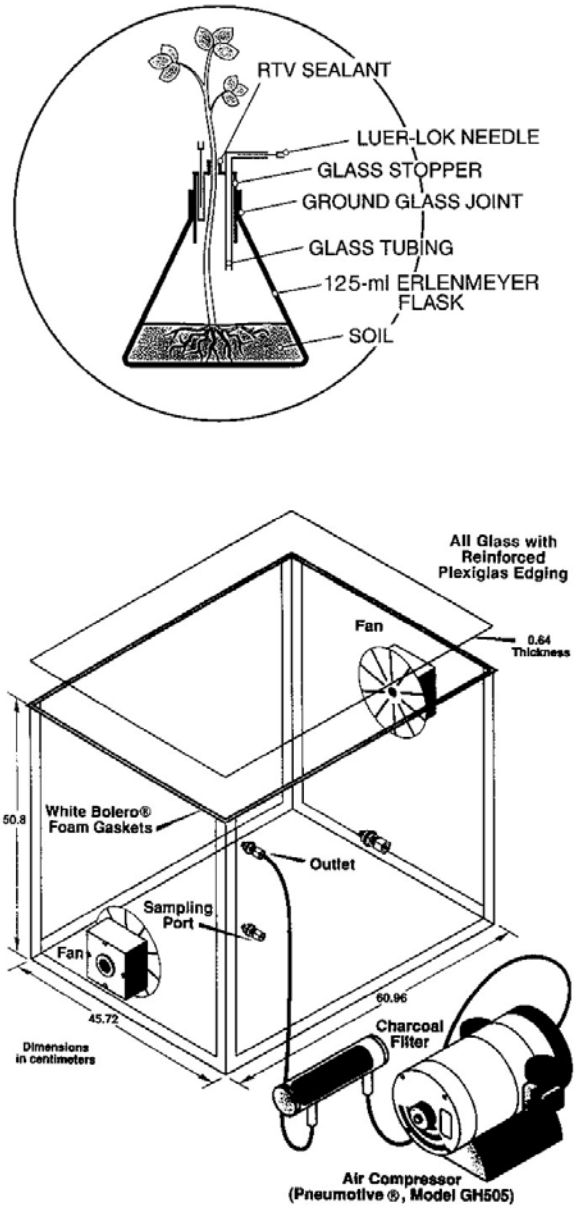

Figure 6 - Test System for [^{14}C]TCE Studies

Erlenmeyer flasks contained either planted or unplanted soil to which [^{14}C]TCE was added (top panel). Flasks were placed inside airtight glass exposure chambers (bottom panel). Air inside the flasks, as well as in the exposure chambers, was flushed with fresh air that was passed through trapping systems for CO_2 and VOCs (charcoal). By the end of the experiment, ~10% of the added ^{14}C-label was recovered as VOCs in air flushed from the exposure chamber. The experimental apparatus isolated the roots from the shoots thus enabling the determination of the route of entry of radioactivity into the plants. Figure taken from Anderson and Walton, 1995.

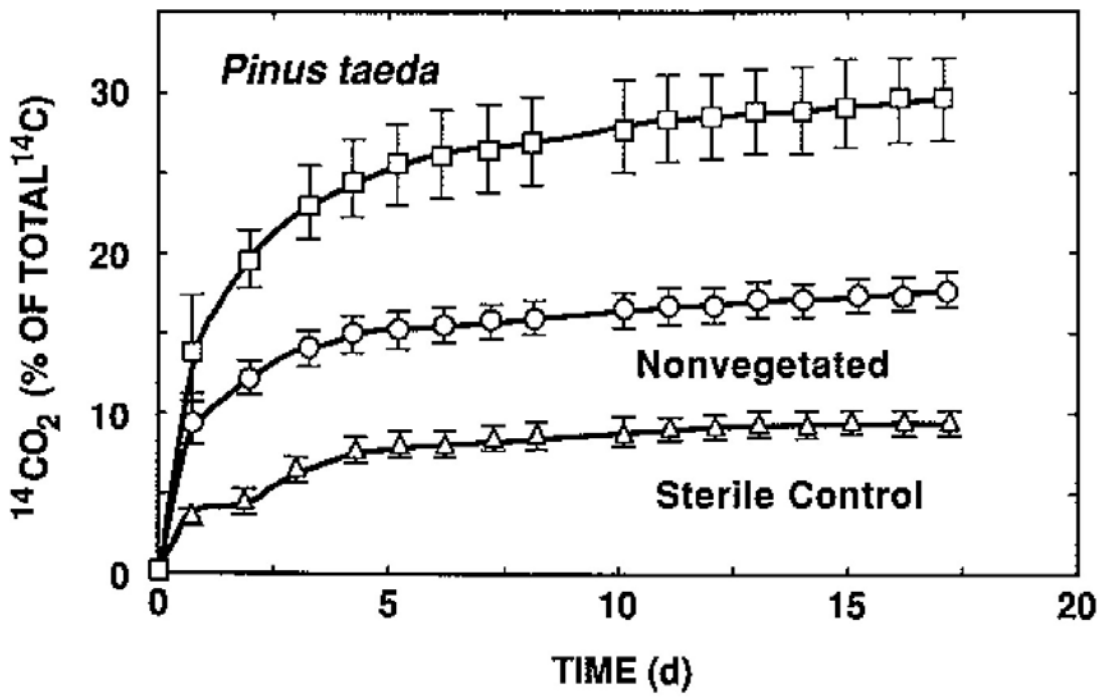

Figure 7 - Mineralization of [^{14}C]TCE in Soil Planted with Loblolly Pine

Each data point is the mean of 3 replicates (error bars, 1 SD of the mean). Figure taken from Anderson and Walton, 1995

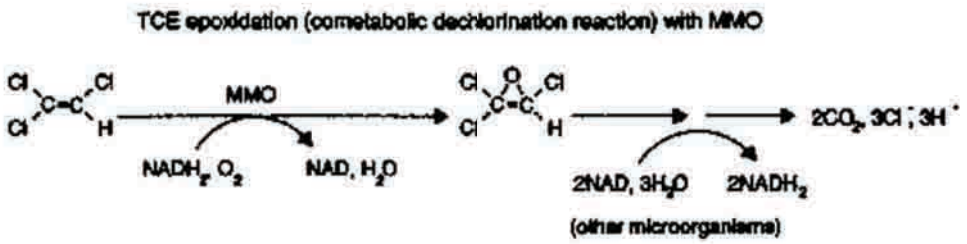

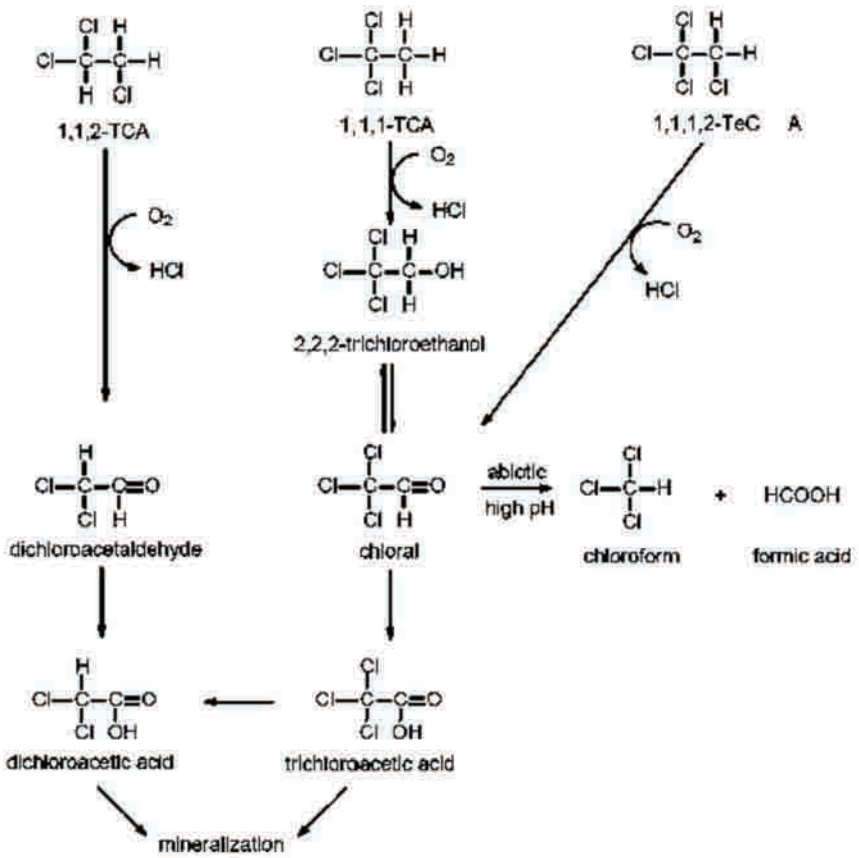

shol e o n vohv

7, , y uc 7a N 7ue1a 7 J 1pa07a . N 01y o OggOm 7NW a , y uc 7a N 7ue1a 7 4o4i J 1pa07a e U y e 00i uV 0kcOgg5m

Appendix A – Monitoring Plan

Monitoring Landfill Cover Soils for Volatile Organic Compounds

The Parties propose to gradually reduce the operation of the air stripper component of the physical treatment system (PTS) as the phytoremediation system becomes acclimated to the groundwater and leachate. As mentioned in Section 3 of the Technical Memorandum Report, the concentrations of contaminants of concern (other than 1,4-dioxane) would be monitored in the root-zone soil of the phytoremediation system as the operation of the air stripper is reduced. These compounds (CoCs) are listed in Table 1, and a monitoring schedule is proposed below. The objective would be to find the balance between the rates of contaminant removal (via the various contaminant removal processes, Section 5) and contaminant addition to the phytoremediation system via the drip-irrigation system. The monitoring program proposed here would be in addition to that described the Section 8 of the Pre-Construction Report (14).

Root-zone soil samples would be collected from each of the various irrigation zones (Figure A1) and analyzed for CoCs other than 1,4-dioxane using Method 8260-5035. Samples would be collected from representative central portions of each zone, and separate samples would be collected for Zones 11A and 11B, and for the east and west portions of Zone 15 (17 samples total). The sampling method used would minimize the disturbance of the sample in order to minimize the loss of VOCs. At each sampling location, a small borehole (2.5 inches diameter, 6 inches deep) would be formed with an auger. A Terracore syringe would be used to collect 5 g soil core samples from the bottom of the borehole. Samples would be placed in pre-tarred VOA vials (supplied by the analytical lab) containing either sodium bisulfate or methanol and sealed. Another vial would be filled with soil for the determination of percent moisture. The core samples in the sealed VOA vials would be analyzed by a gas chromatograph-mass spectrometer closed-system purge-and trap process (Method 8260-5035). A North Carolina accredited laboratory would be used.

Monitoring Schedule. The operation of the air stripper would be reduced in a step-wise fashion and the CoCs would be monitored quarterly during this process. The objective would be to find the balance between the rates of contaminant addition and contaminant removal from the soil. Thus, for example, if over the first quarter of reduced air stripping, the extent of CoC removal by air stripping was decreased by half and the concentrations of CoCs did not change in the landfill cover soils, the tentative conclusion would be that the rates of contaminant addition and removal were balanced for that quarter. It is anticipated that finding the contaminant addition/removal balance, and quarterly monitoring, would require about one year. Because some of the contaminant removal processes would go on year-round (e.g., cometabolism) all of the zones including the hardwood zones initially would be sampled quarterly year-round. Monitoring then would be decreased to bi-annually for one year to confirm that stable rates of addition and removal had been obtained. After stable conditions are attained and confirmed, monitoring would be performed only as necessary, in accordance with the Effectiveness Evaluation Plan.

Attachment 2

Smith Moore Leatherwood Letter of 12/1/2010

SMITH MOORE LEATHERWOOD

December 1, 2010

Mr. Vance Jackson
Unit Supervisor
Division of Waste Management
401 Oberlin Road
Raleigh, NC 27605

Re: Former Seaboard Chemical Corporation Site and Former City of High Point Riverdale Drive Landfill
Declaration of Perpetual Land Use Restrictions for Crutchfield Property

Dear Vance:

The City of High Point and Seaboard Group II (the "Group") have completed our discussions with the Crutchfield family, and despite our best efforts we have not been able to obtain their consent to record land use restrictions ("LURs") on their property. This letter summarizes the entire multi-year process, so that you will have a complete picture.

DENR, the City and the Group have had continuing conversations with the Crutchfield family for many years. Our original discussions in the 1990s dealt with obtaining access to their property. Initially the Crutchfields resisted our efforts to conduct a groundwater assessment on their property. Eventually, DENR was forced to obtain an administrative search warrant to obtain access. Relations with the Crutchfields improved after that, and we have operated amicably under written and verbal access agreements since 2000. We have paid the Crutchfields a total of $5,000 over the years in exchange for allowing us access to conduct sampling and maintain our monitoring well network.

On May 2, 2006, representatives of the City and the Group met with Mr. Bob Glaser and Ms. Jaclyn Drummond of DENR and Mr. Wallace Finlator of the Attorney General's office to discuss, among other things, potential LURs for the Crutchfield property. At that point the Randleman Reservoir buffer restrictions had been adopted, and they limited development on the Crutchfield property. I agreed to provide a summary of those restrictions, and the State representatives agreed to review it and let us know what additional restrictions, if any, would be required. I sent a summary of the Randleman Reservoir buffer requirements to Mr. Finlator on May 15, 2006.

Conversations between Bob Glaser and Gary Babb continued after that meeting. They talked about the possibility of dividing the Crutchfield property and requiring LURs only on the

Direct 336.378.5314 | Fax 336.433.7430 | steve.earp@smithmoorelaw.com
Smith Moore Leatherwood LLP ▪ Attorneys at Law
PO Box 21927 (27420) 300 North Greene Street Suite 1400 Greensboro, NC 27401 ▪ 336.378.5200 ▪ www.smithmoorelaw.com
Atlanta, GA ▪ Charlotte, NC ▪ Greensboro, NC ▪ Greenville, SC ▪ Raleigh, NC ▪ Wilmington, NC

portion closest to the former Seaboard site and the landfill (collectively, the "Site"). On July 26, 2006, I sent a draft set of LURs to Mr. Finlator for his review, incorporating an east-west dividing line as discussed by Mr. Glaser and Mr. Babb. Mr. Finlator and I then traded revisions until November 15, 2006. All these documents incorporated the east-west dividing line. At that point the conversations regarding this issue stopped as we focused on other aspects of the remedial action.

In May 2008, Mr. Glaser informed Mr. Babb that DENR no longer viewed a division of the Crutchfield property as feasible. To the best of my knowledge, the parties did not discuss LURs for the Crutchfield property again until near the end of 2008.

On December 29, 2008, the City, the Group and DENR finalized a settlement that included a Remedial Action Settlement Agreement ("RASA"). The approved remedy in the RASA was conditioned upon recordation, compliance with and enforcement of the LURs described in the Statement of Work. Paragraph L of the Statement of Work required the Group and the City to submit a Declaration of Perpetual Land Use Restrictions for the Crutchfield property, along with a survey. Upon approval, these documents were to be recorded.

As you know, North Carolina law does not allow either the State or any private third party to record LURs without the landowner's consent. In January 2009, representatives of the Group and the City asked DENR to provide us with draft LURs that the State would require for the Crutchfield property. On March 6, 2009, you sent a letter to Mr. Babb with draft LURs. Your letter instructed us to pursue all means at our disposal to obtain the necessary LUR agreement for the Crutchfield property.

It took some time to arrange a meeting with Mr. Crutchfield, because he is a long-distance truck driver. Eventually, on May 6, 2009, I met with Mr. J.T. Crutchfield and his mother, Mrs. Maxine Crutchfield, at the gate to their property. I gave them a copy of your letter of March 6, along with the draft LURs that DENR had prepared. I told them that we would like to reach an agreement that would allow us to record the restrictions. They asked me a number of questions about the documents and then asked what I would do in their position. I told them that I would talk with a lawyer. On behalf of the City and the Group, I offered to pay their legal fees if they chose to follow that course. I also agreed to provide them with names of attorneys with experience in this area, whom they might choose to retain. I sent them those names on May 15.

On June 19, 2009, I received a call from Ms. Beth Koonce, an attorney in High Point (not one of the attorneys I had recommended), who told me that she had been retained by the Crutchfields. After a few months without progress, on September 3, 2009 I heard from Mr. Jim

Bryan of Nexsen Pruet in Greensboro. He said that he had met with Ms. Koonce and the Crutchfields, and the Crutchfields had decided to retain him. He requested various documents, which I sent to him on September 9 and October 6. Gary Babb and I met with Mr. Bryan on October 14, 2009, and we discussed the history of the site, the groundwater conditions and the draft Crutchfield LURs at length. We also provided him with additional documents.

The discussions with the Crutchfields and their attorney continued to move very slowly. In November 2009 Mr. Bryan sent me a series of detailed questions, which gave the impression that they were considering three options: (i) recordation of the LURs as we had requested, (ii) an exchange of their property for other agricultural property in the area, or (iii) an outright sale of their property. We provided answers to the questions in December 2009.

On March 3, 2010, Mr. Bryan reported to me that Mr. Crutchfield had been too busy to meet with the Guilford County Planning Department regarding the suitability of particular properties that he might acquire in an exchange for his property. He also indicated that he had contacted a commercial real estate appraiser. He warned me, however: "But this all assumes the Crutchfield family decides it wants to take that next step. As the family has told you in the past, the idea of losing their farmland is a tough pill to swallow. But I think we are making progress. I'll keep you posted."

On March 9, 2010, Mr. Bryan wrote to me again and indicated that the Crutchfields had decided not to pursue the option of exchanging land. They also had decided to explore the possibility of selling their property and wanted to establish a procedure for obtaining appraisals. We explained to Mr. Bryan that our preference was to negotiate a price for recording the LURs, not to acquire the Crutchfields' property, but we reached an agreement under which the City and the Group would pay for two independent appraisals. The Crutchfields also insisted on having each appraiser determine not only a current fair market value, but also a value as of June 2007.

The two appraisers completed their appraisals on April 30 and August 13, 2010. The estimates of current value varied from $360,000 to $642,000. The City and the Group paid all the costs of conducting the appraisals, which totaled $6,500.

After reviewing the appraisals, the City and the Group concluded again that we could make no use of the Crutchfield property and could not justify attempting to acquire it at the appraised values. In September 2010, I called Mr. Bryan and made an offer to obtain their consent to record LURs. In consideration, we offered to pay the Crutchfields $25,000 and convey approximately one acre of adjacent property owned by the City. This additional adjacent

land would give the Crutchfield property street access, which it currently does not have. We believed that this offer would be attractive to the Crutchfields. In response to a question from Mr. Bryan, I told him that the offer was negotiable. On October 1 I summarized the terms of the offer in writing. A copy of my letter is enclosed.

The Crutchfields then met with Mr. Bryan and decided that they were no longer interested in discussing the matter. A copy of Mr. Bryan's letter also is enclosed.

Thus after several years of discussions, payment by the City and the Group of approximately $14,605 in the Crutchfields' legal fees, $6,500 in appraisal costs, approximately $5,000 in surveying costs, and our own significant legal and consulting costs, and despite making a substantial offer of cash and land, we have not been able to obtain the Crutchfield family's consent to record LURs on their property. Under applicable statutes, we have no ability to force the Crutchfields to consent.

We strongly believe that this result should not have any impact on the nature or scope of the remedy that we are implementing at the Site, for several reasons:

1. The extraction well network we will use will create substantial drawdown, which should keep contaminants that are beneath the Site from moving across the river and beneath the Crutchfield property.

2. The Piedmont Triad Regional Water Authority ("PTRWA") owns the first approximately 200 feet of property on the north side of the reservoir, including all the property where we had found groundwater contamination emanating from the Site. The only contamination that we have observed beneath the Crutchfield property most likely originated on that property.

3. The PTRWA's property will never be developed, and the Crutchfield property itself also is already subject to stringent restrictions on development. As discussed earlier in this letter, the Randleman Reservoir buffer rules apply to the Crutchfield property. Moreover, in our many years of dealing with the Crutchfields, they have never indicated any interest in utilizing or developing their property for anything other than its former use as a single family residence and its current agricultural use of grazing cattle.

In addition, Guilford County has adopted Well Rules, which became effective July 1, 2008. A copy of the rules is enclosed. The rules greatly restrict the ability to obtain a permit to

install a groundwater extraction well on the Crutchfield property. The relevant section is on page 17, Section III (A)(2), which states:

> Special consideration shall be given for wells located within a one-thousand-five hundred foot radius around a point or source of established groundwater contamination. Detailed information must be obtained from the Guilford County Health Department prior to issuance of a well permit. Well permit requirements will be based upon this information.

We propose to notify Guilford County of the locations where groundwater contamination has been established. The 1,500-foot restricted area would extend to approximately the old homeplace on the Crutchfield property.

For all these reasons, we believe that the best approach is to modify the Approved Remedy to eliminate, at least for the time being, the requirement to impose LURs on the Crutchfield property. In its place, we believe that an appropriate remedial step would be to monitor closely the uses that are made of the Crutchfield property. If those uses change materially, we will submit a report to DENR and evaluate whether any new uses should cause a change in the Approved Remedy. Should the Crutchfields sell the property, which is considered unlikely, we are hopeful that a new owner would be more amenable to an agreement to record the LURs.

We look forward to your thoughts and would welcome the opportunity to discuss this with you.

Sincerely,

Stew

Stephen W. Earp

Enclosures

cc: Kathleen Waylett, Esq.
Wallace Finlator, Esq.
Nancy Scott, Esq.
Amos Dawson, Esq.
Fred Baggett, Esq.
Mr. Gary Babb

Mr. Chris Thompson
Mr. Jeff Moore
Mr. James LaRue
Mr. Tom Wilson
Mr. Randy Smith

NEXSEN|PRUET

James W. Bryan
Member
Admitted in NC

November 2, 2010

Stephen W. Earp, Esq.
Smith Moore Leatherwood
300 North Greene Street
Greensboro, NC 27401

Re: Former Seaboard Chemical Corporation Site, EPA ID No. NCD071574164, High Point, North Carolina, and Former City of High Point Riverdale Drive Landfill

Dear Steve:

I have now heard from the Crutchfield family about their response to your offer letter dated October 1, 2010.

Unfortunately, the family declines the offer of the City of High Point and the Seaboard Group II and does not want to pursue further discussions about the matter. From their perspective, the two appraisals gave a good indication of the market value of the Crutchfield farmland property adjacent to the Deep River – the Watt appraisal of $642,000 as of 6-1-07 and 6-1-10 and the McNairy appraisal of $520,000 as of 6-1-07 and $360,000 as of 4-14-10. The appraisals encouraged them that perhaps a deal could be reached with your clients purchasing the entire 79-acre tract. But it appears a deal cannot be reached now. The family is not interested in the offer of the City and the Seaboard Group II, which offer would pay the family the sum of $25,000 and convey it a one-acre tract of the City's adjacent land, in exchange for the family recording a perpetual land use restriction on the public record, granting your clients a permanent easement across the property, and releasing your clients from claims relating to the recording of the land use restriction.

Thus, at this point, the family wants to close the matter and they are relieving me of my duties as their counsel. I will send you a final invoice shortly. I appreciate all your efforts on the matter and thank you for suggesting to the Crutchfields that I be their counsel on the matter.

Charleston
Charlotte
Columbia
Greensboro
Greenville
Hilton Head
Myrtle Beach
Raleigh

701 Green Valley Road
Suite 100 (27408)
P.O. Box 3463
Greensboro, NC 27402
www.nexsenpruet.com

T 336.373.1600
F 336.387.8907
E JBryan@nexsenpruet.com
Nexsen Pruet, PLLC
Attorneys and Counselors at Law

Please give me a call if you have any questions.

With kind regards, I am

Sincerely yours,

NEXSEN PRUET, P.L.L.C.

James W. Bryan

cc: Maxine Crutchfield
J.T. Crutchfield
Diane Yates

SMITH MOORE LEATHERWOOD

October 1, 2010

Via E-Mail and First Class Mail

Mr. Jim Bryan
Nexsen Pruet LLC
Post Office Box 3463
Greensboro, NC 27402

Re: Crutchfield Property

Dear Jim:

As you requested, this letter summarizes the offer that I conveyed to you verbally some time ago on behalf of the Seaboard Group II and the City of High Point (referred to in this letter as "our clients").

Our clients propose that the owners of the Crutchfield property (1) execute, and cooperate fully with our clients in recording, a Declaration of Perpetual Land Use Restrictions (DPLUR) and related documents, satisfactory to the North Carolina Department of Environment and Natural Resources (DENR), in the office of the Guilford County Register of Deeds; (2) grant to our clients a permanent easement to enter the Crutchfield property for the purpose of monitoring and maintaining groundwater monitoring wells on or accessible from that property; and (3) grant to our clients a release of all claims related to the recording of the land use restrictions.

In exchange, our clients would (a) pay all costs of preparing and recording the DPLUR and related documents; (b) take responsibility for submitting the annual updates as required by DENR; (c) pay to the owners of the Crutchfield property the sum of $25,000.00; and (d) convey to the owners of the Crutchfield property, or their assignee, approximately one acre of contiguous property currently owned by the City of High Point and fronting on Vickrey Chapel Road, with the location to be agreed upon by the parties. The conveyance would be by limited warranty deed.

Direct 336.378.5314 | Fax 336.433.7430 | steve.earp@smithmoorelaw.com
Smith Moore Leatherwood LLP ▪ Attorneys at Law
PO Box 21927 (27420) 300 North Greene Street Suite 1400 Greensboro, NC 27401 ▪ 336.378.5200 ▪ www.smithmoorelaw.com
Atlanta, GA ▪ Charlotte, NC ▪ Greensboro, NC ▪ Greenville, SC ▪ Raleigh, NC ▪ Wilmington, NC

Thanks very much. I look forward to your clients' prompt reply.

Sincerely,

Stephen W. Earp

cc: Mr. Amos Dawson
Mr. Fred Baggett
Mr. Chris Thompson

Guilford County Well Rules

Effective July 1, 2008

FOREWORD

The Guilford County Board of Health enacted these rules, effective June 1, 1989 on the basis or finding of the need to more responsibly protect the groundwater in Guilford County. During the years that preceded local rule implementation, development escalated, resulting in an increase in density and in potential for groundwater contamination. While a state standard for well construction had been established, there was no active state program enforcing the standard, and Guilford County Health Department staff observed the existence of numerous newer wells not meeting the standard and many old poorly constructed wells which were out of use but not properly abandoned. This, along with the increased presence of bacteria in wells within developing areas, pointed to the need for more stringent local rules. The rules, as adopted, provided for permitting with local inspections of the well construction process and required the use of materials and sampling that would avail the citizens of Guilford County a higher standard of protection of their groundwater in the future. During the years that followed, the program/rules have been evaluated on a regular basis so as to determine where changes have been needed that would enhance the approach to well construction and keep pace with the ever changing development industry.

Some specific milestones have included the following enhancements:

1. Increasing minimum casing requirement from twenty feet to forty feet and going from ~~1~~ one foot into bedrock to five feet into bedrock, thus decreasing the possibility for encountering contaminated water zones.

2. Allowing the use of bentonite grout, thus providing another grout option which reduces the heat of hydration and reduces cracking, while providing increased sealing capabilities.

3. Allowing the use of a liner sand cement grout which reduces the heat of hydration, while providing a grout that would flow, seal, and set up properly when repairing wells.

4. Requiring that new wells located within a one-thousand-five-hundred foot radius of a known contaminated soil or groundwater site be sampled for various parameters, thus identifying any possible contamination issues.

5. Establishing specific depth to yield requirements, thus providing the availability of water needed to accommodate the average residence.

6. Establishing standards for the construction and operation of wells with a daily use of more than 10,000 gallons, thus reducing the potential for adversely impacting surrounding wells.

7. Incorporating changes as required by new state rules 15A NCAC 02C .0300 and 15A NCAC 18A .3800, effective July 1, 2008. Adoption of these rules, as well as 15A NCAC 02C .0100, by reference on July 1, 2008.

Changes to these rules have always been preceded by conferences/meetings conducted with stakeholders who have been regulated or otherwise impacted by the rules. These periodic reviews and team efforts for improvement have resulted in rules affording greater protection to public health while achieving economic considerations.

CHAPTER 1

GENERAL PROVISIONS, DEFINITIONS, REGISTRATION, AND VARIANCE

SECTION I GENERAL PROVISIONS

(A) Authorization - The Guilford County Board of Health is authorized under the provisions of Chapter 130A, Section 39 of the General Statutes of North Carolina to adopt appropriate rules and regulations for the protection of the public health.

(B) Purpose - Consistent with the responsibility to protect and advance the public health, it is declared to be policy of the Guilford County Board of Health to require that the location, construction, repair and abandonment of water supply wells, construction and operation of public water supply systems, and construction, repair and abandonment of monitoring wells, air injection wells, air sparging wells, and recovery wells conform to such reasonable standards and requirements as may be necessary to protect the public health and groundwater resources.

(C) Scope - No person shall construct, repair or abandon, or cause to be constructed, repaired or abandoned, any well contrary to the provisions of these regulations and standards. Previously adopted procedures and requirements of the Guilford County Department of Public Health are superseded by these Regulations and Standards.

(D) Conflict with other Laws and Regulations - The provisions of any federal, state or municipal law or regulation establishing standards affording greater protection to the public welfare, safety, health and the groundwater resources shall prevail within the jurisdiction of such agency or municipality over standards established by these regulations.

(E) Penalties - Any person who willfully violates any provision of these regulations, or any other issued pursuant thereto, shall be guilty of a misdemeanor punishable by a fine not to exceed five hundred dollars or imprisonment not to exceed thirty days. As provided by G.S. 130A-18, the Guilford County Health Director may also institute an action in the Guilford County Superior Court for injunctive relief. All other remedies provided by state law, including Part 2 of Article 1 of Chapter 130A of the North Carolina Statutes shall be available to the Guilford County Health Director.

(F) Inspection - Before being used to supply water for human consumption, all newly constructed wells shall be inspected and found to comply with the provisions of this ordinance. Permanent abandonment of any well or any repair to a well shall be inspected by the Guilford County Health Director.

Emergency repairs that are made outside normal working hours of the Guilford County Health Department, i.e., nights, weekends and holidays, shall require the use of well casing complying with all the provisions of Chapter II Section III (D).

The Guilford County Health Director shall have the authority to enter upon the property at all reasonable times for the purposes of inspection or sampling of a water

supply system or for the investigation of a complaint relating to the water supply system.

(G) Appeals - Appeals concerning the interpretation and enforcement of these rules by the local Health Department, shall be conducted in accordance with the following procedure:

1. The aggrieved person shall give written notice of appeal to the local Health Director within thirty days of the challenged action. The notice shall contain the name and address of the aggrieved person, a description of the challenged action and a statement of the reasons why the challenged action is incorrect. The Health Director may affirm, modify or reverse the original action. The Health Director shall issue a written decision based on evidence presented at the meeting. The decision shall contain a concise statement of the reasons for this decision.

2. If the aggrieved person desires to pursue the appeal further, such party shall give written notice of the appeal to the local Health Director with a fee in an amount approved by the Board of Health and Board of Commissioners and a performance bond in the amount necessary to correct the duly noted violation within thirty days of the date of the written notice from the local Health Director. Upon filing of the notice, the local Health Director shall, within five working days, transmit to the local Board of Health the notice of appeal and the papers and materials upon which the challenged action was taken.

3. The local Board of Health shall hold a hearing within fifteen days of the receipt of the notice of appeal. The Board shall give the person not less than ten days notice of the date, time and place of the hearing. On appeal, the Board shall have authority to affirm, modify or reverse the challenged action. The local Board of Health shall issue a written decision based on the evidence presented at the hearing. The decision shall contain a concise statement of the reasons for the decision.

4. A person who wishes to contest a decision of the local Board of Health shall have the right of appeal to the Guilford County District Court within thirty days after the date of the decision by the Board. The scope of review in the District Court shall be the same as in G.S. 150 B-51.

SECTION II DEFINITIONS

(A) "Abandoned well" means a well whose use or construction has been discontinued, or which is in such a state of disrepair that continued use for obtaining groundwater or other useful purpose is impracticable.

1. "Temporarily abandoned well" means any usable well whose use has been temporarily discontinued because of well or pump maintenance problems and newly constructed wells not yet put into service.

2. "Permanently abandoned well" means any well removed from or not yet put into service; or whose use is impracticable because of faulty construction, location, water quality, insufficient yield, unserviceable casing or screen; or which has been removed from service because it no longer serves its intended use.

(B) "Access port" means an opening in the well head installed for the primary purpose of determining the water level in the well.

(C) "Addition" means any structure, whether free standing or attached to another (including swimming pools, oil tanks, signs, etc.) which is constructed, altered or placed on property that contains one or more wells. This would not include replacement of existing equipment within the existing footprint of a structure and addresses only those situations for which a building permit is required.

(D) "Agent" means any person who by mutual and legal agreement with a well owner has authority to act in behalf of the well owner in executing application for well-permits. The agent authorized may be either a general agent or a limited agent to do one particular act.

(E) "Air injection well" or "air sparging well" means a well that is used to inject uncontaminated air to the subsurface to promote volatilization and enhance bioremediation of contaminants in the soil and groundwater.

(F) "Artesian well" means a well that taps groundwater under pressure, causing the water to rise above the surface without pumping.

(G) "ASTM" means the American Society for Testing and Materials.

(H) "Biofilm" means a collection of microorganisms which may exist on solid surfaces within a water well. This collection includes, but is not limited to, slime-formers, iron related bacteria, sulfate reducing bacteria, pseudomonas, and coliforms.

(I) "Board of Health" means the Guilford County Board of Health or its official representatives.

(J) "Casing" means pipe or tubing constructed of specified materials and having specified dimensions and weights, that is installed in a bore hole, during or after completion of the bore hole, to support the side of the hole and thereby prevent caving, to allow completion of a well, to prevent formation material from entering the well, to prevent the loss of drilling fluids into permeable formation, and/or prevent entry of contamination.

(K) "Certificate of Completion" means a certification by the Guilford County Health Director that a water well has been constructed or repaired in compliance with the construction permit or repair permit.

(L) "Certified laboratory" means the North Carolina State Laboratory of Public Health certified by the US Environmental Protection Agency or a laboratory certified by the

Certification Section of the North Carolina Public Health Laboratory pursuant to 10A NCAC 42D to perform tests to determine the presence of coliform bacteria or the chemical constituents to be tested.

(M) "Clay" means a substance comprised of natural, inorganic, finely ground crystalline mineral fragments which, when mixed with water, forms a pasty moldable mass that preserves its shape when air dried.

(N) "Coliform bacteria" or "total coliform" means aerobic or facultative anaerobic, gram-negative, non-spore forming, rod shaped bacteria included in the genera Klebsiella, Enterobacter, Escherichia and Citrobacteria. Coliform bacteria originate in soil, vegetation or the intestinal tract of warm-blooded animals. The presence of coliform bacteria in a water sample indicate the presence of a pathway for bacteria and possibly pathogens to gain entry into a water supply system.

(O) "Community Water System" or "CWS" means a public water supply system which serves fifteen or more service connections or which regularly serves at least twenty-five year-round residents.

(P) "Cone of depression" means a cone-shaped lowering of the water table around a pumped well. Groundwater flow is diverted towards the well as it flows into the depression cone.

(Q) "Consolidated rock" means rock that is firm and coherent, solidified or cemented, such as granite, gneiss, limestone, slate or sandstone that has not been decomposed by weathering.

(R) "Construction of wells" means and includes all acts necessary to construct a well for any intended use, including the location and excavation of the well, placement of casing, grout, screens and/or fittings, development and testing.

(S) "Contamination" means the introduction of foreign materials of such nature, quality, and quantity into the ground waters as to exceed the groundwater quality standards specified in 15A NCAC 2L (Classifications and Water Quality Standards Applicable to the Groundwaters of North Carolina).

(T) "Department of Environment and Natural Resources" means the North Carolina Department of Environment and Natural Resources. The term also means the authorized representative of the Department of Environment and Natural Resources.

(U) "Designed Capacity" shall mean that capacity that the well system and associated pumping system can extract from the ground.

(V) "Detritus" means the remains of something that has been destroyed or broken up.

(W) "Domestic use" means water used for drinking, bathing, household purposes, livestock or gardens.

(X) "DUMT 10,000 well system" means a well or well system, with daily water use of more than 10,000 gallons. This shall not apply to Bona Fide farms or wells serving one Single Family Residence.

(Y) "DUMT 10,000 well system operation permit" means a permit issued by the Guilford County Health Director to operate a DUMT 10,000 well system. This permit may include specific requirements for maintenance and operation, restrictions on water usage, responsibilities of the owner, and other requirements for the continued proper performance of a DUMT 10,000 well system.

(Z) "Fecal coliform bacteria" or "fecal coliform" means a sub-group of coliform bacteria that are present in the intestinal tract and feces of warm-blooded animals. The presence of fecal coliform bacteria in a water sample indicate fecal contamination and the presumed presence of pathogens in the water supply.

(AA) "Formation material" means naturally occurring material generated during the drilling process that is composed of sands, silts, clays, or fragments of rock and which is not in a dissolved state.

(BB) "GPM" and "GPD" means gallons per minute and gallons per day, respectively.

(CC) "Grout" means and includes the following:

1. "Neat cement grout" means a mixture of not more than six gallons of clear potable water per ninety-four pound bag of Portland cement. Up to five percent by weight, of bentonite clay may be used to improve flow and reduce shrinkage. Use of bentonite clay shall require the use of a grout machine to properly mix and pump grout.

2. "Liner sand cement grout" means a mixture of not more than one part sand and two parts cement and not more than six gallons of clear potable water per ninety-four pound bag of Portland cement.

3. "Sand cement grout" means a mixture of not more than two parts sand and one part cement and not more than six gallons of clear potable water per ninety-four pound bag of Portland cement.

4. "Concrete grout" means a mixture of not more than two parts gravel to one part cement and not more than six gallons of clear potable water per ninety-four pound bag of Portland cement. One hundred percent of the gravel must pass through a one-half inch mesh screen.

5. "Bentonite grout" means a mixture of not more than twenty gallons of clear, potable water per fifty pound bag of commercial granulated sodium bentonite to produce a grout weighing no less than nine point four (9.4) pounds per gallon of mixture. This grout shall consist of a minimum of twenty-three point one (23.1) percent solids bentonite clay. Nonorganic, non-toxic substances may be added to improve particle distribution and pumpability. Bentonite grout may be used on

the outside of casing from bottom of the well up to within three feet below land surface and must be placed by the pumping or pressure method.

(DD) "Health Department" means the Guilford County Department of Public Health.

(EE) "Health Director" means the Director of the Guilford County Department of Public Health or his authorized representative.

(FF) "Installing pumps and pumping equipment" means placing and preparing pumps and pumping equipment for operation, including all construction involved in making entrances to the well and establishing seals.

(GG) "Liner pipe" means pipe that is installed inside a completed and cased well for the purpose of preventing the entrance of contamination into the well or for repairing ruptured or punctured casing or screens.

(HH) "Monitoring well" means any well constructed for the primary purpose of obtaining samples of groundwater or other liquids for examination or testing or for the observation or measurement of groundwater levels. Any well using "Push Technology" shall be considered to be a monitoring well as defined herein if it is not permanently abandoned within twenty-four hours after initiation of construction. This definition excludes lysimeters, tensiometers, and other devices used to investigate the characteristics of the unsaturated zone but includes piezometers, a type of monitor well constructed solely for the purpose of determining groundwater levels.

(II) "Monitoring well, air injection well, air sparging well, and recovery well permit" means a permit issued by the Guilford County Health Director permitting the construction, repair, operation, or abandonment of monitoring wells, air injection wells, air sparging wells, or recovery wells.

(JJ) "Non-Transient Non-Community Water System" or "NTNC" means a public water supply system that is not a community water system and that regularly serves at least twenty-five of the same persons over six months per year.

(KK) "Non-potable water" means water containing bacteria, minerals, organic or inorganic chemicals or petroleum products of such quantity as to render the water unsafe, harmful or generally unsuitable for domestic use.

(LL) "Owner" means any person who holds the fee or other property rights in the well being constructed. A well is real property and its construction on land rests ownership in the land owner in absence of contrary agreement in writing.

(MM) "Person" means any and all persons including individuals, firms, partnerships, associations, public or private institutions, municipalities or political subdivisions, governmental agencies or private or public corporations organized or existing under the laws of this state or of any other state or county.

(NN) "Pitless adapters" or "pitless units" are devices specifically manufactured to the

standards specified under Chapter II Section III (L) (7) of these rules for the purpose of allowing a subsurface lateral connection between a well and plumbing appurtenances.

(OO) "Plat" means a property survey prepared by a registered land surveyor, drawn to a scale of one inch equals no more than sixty feet, that includes: the specific location of all structures and proposed structures and appurtenances, including but not limited to decks, porches, pools, driveways, out buildings, existing and proposed wastewater systems, existing and proposed wells, springs, water lines, surface waters or designated wetlands, easements, including utility easements, and existing or proposed chemical or petroleum storage tanks above or below ground. "Plat" also means, for subdivision lots approved by the local planning authority and recorded with the county register of deeds, a copy of the recorded subdivisions plat that is accompanied by a site plan that is drawn to scale.

(PP) "Potable water" means water of such quality that it is suitable for human consumption.

(QQ) "Private water supply system" means any potable water supply system that is not a public water supply system.

(RR) "Public water supply system" means a system for the provision to the public of piped water for human consumption if the system serves fifteen or more service connections or which regularly serves twenty-five or more individuals.

(SS) "Pumps and pumping equipment" means the well pump, pump pipe and any other equipment or materials used or intended to be used for withdrawing or obtaining groundwater.

(TT) "Recovery well" means any well constructed for the purpose of removing contaminated groundwater, other liquids, or vapor from the sub-surface.

(UU) "Redevelopment" means work involved in acidizing, air-lifting, chemical treatment, cleaning, deepening or changing depths, "dry icing", freezing, hydraulic fracturing, jetting, perforating, reaming, scrubbing, surging, or otherwise redeveloping a well excavation or any other work which requires breaking or opening the well seal. "Redevelopment" does not apply to routine pump maintenance or replacement; however, routine pump maintenance or replacement shall be followed by disinfection of the water supply system and proper replacement of the seal.

(VV) "Repair" means work involved in deepening or changing depths, reaming, sealing, lining, perforating, screening, cleaning, acidizing, "dry icing", freezing, hydraulic fracturing, or otherwise redeveloping a well excavation or any other work which requires breaking or opening the well seal. "Repair" does not apply to routine pump maintenance or replacement; however, routine pump maintenance or replacement shall be followed by disinfection of the water supply system and proper replacement of the seal.

(WW) "Responsible party" means the person or persons responsible for oil or chemical contamination resulting from a release from any storage tank or oil or chemical spill and, as such, is responsible for payment of all fees associated with permitting of all monitoring wells, air injection wells, air sparging wells, or recovery wells (both on and offsite) associated with the contamination incident. The responsible party shall remain liable for all monitoring well fees until such time as the contamination incident requires no further action as documented by the State of North Carolina. This definition shall also apply to any person or persons desiring to monitor soil and/or groundwater integrity for the purpose of quality assurance/quality control.

(XX) "Rock Screenings" means an approved material used in concrete grout

(YY) "Sealed" means no detectable leakage under the casing be allowed to enter the borehole.

(ZZ) "Seated" means a part or surface on or in which another part or surface rests; to fix firmly in place; to rest or fit into another part.

(AAA) "Settleable solids" means the volume of solid particles in a well-mixed one liter sample which will settle out of suspension, in the bottom of an Imhoff Cone, after one hour. This measurement shall be reported in milliliters per liter.

(BBB) "Single well step-down pumping test" (or pumping test) means a test made by pumping a well for a period of time and observing the change in hydraulic head in the aquifer. A pumping test is used to determine the capacity of the well and the hydraulic characteristics of the aquifer. Pumping test is also called an "aquifer test"

(CCC) "Site" means all contiguous property under the same ownership or all contiguous property wherein wells are under the same ownership.

(DDD) "Site plan" means a drawing, not necessarily drawn to scale, that shows the existing and proposed property lines with dimensions, and the specific location of all structures and proposed structures and appurtenances, including decks, porches, pools, driveways, out buildings, existing and proposed wastewater systems, existing and proposed wells, springs, water lines, surface waters or designated wetlands, easements, including utility easements, and existing or proposed chemical or petroleum storage tanks above or below ground.

(EEE) "Specific capacity" means the yield of the well expressed in gallons per minute per foot of draw-down of the water level (gpm/ft.-dd) per unit of time.

(FFF) "Spool-piece pipe" means a connecting (spool) section of pipe which can be easily removed and allow the immediate installation of a meter without further pipe modification.

(GGG) "Static water level" means the level at which the water stands in the well when the well is not being pumped and is expressed as the distance from a fixed reference point to the water level in the well.

(HHH) "Suspended solids" means the solid particles in a sample of water which are retained by a standard glass micro fiber filter, with pore openings of one and one-half microns, when dried at a temperature of 103 to 105 degrees Fahrenheit.

(III) "Temporary well" means a well, other than a water supply well that is constructed to determine aquifer characteristics, and which will be properly abandoned or converted to a permanent well within five days (120 hours) of the completion of drilling of the borehole.

(JJJ) "Turbidity" means the cloudiness in water, due to the presence of suspended particles such as clay and silt that may create aesthetic problems or analytical difficulties for determining contamination. Turbidity measure in Nephelometric Turbidity Units (NTU) is based on a comparison of the cloudiness in the water with that in a specially prepared standard.

(KKK) "Unconsolidated rock" means those rock formations that are not firm and coherent, solidified or cemented, such as sand rock, sand, clay, shell, saprolite or decaying rock.

(LLL) "Vent" means an opening in the wellhead installed for the purpose of allowing changes in the water level in a well due to natural atmospheric changes or to pumping. A vent can also serve as an access port.

(MMM) "Water supply" means any potable source of water.

(NNN) "Water supply system" means well, well pump and pipe used in connection with or pertaining to the operation of a water supply, including pressure tank and fittings.

(OOO) "Water supply wells other than for a single family residence" means and includes water supply wells for industrial/commercial facilities, multiple connection residential wells, and community wells. These wells can be used for drinking, bathing, gardens, or industrial or commercial processing.

(PPP) "Well" means any excavation that is cored, bored, drilled, jetted, dug or otherwise constructed for the purpose of locating, testing, developing, draining or recharging any groundwater reservoirs or aquifer, or that may control, divert or otherwise cause the movement of water from or into any aquifer.

(QQQ) "Well contractor" means a person in trade or business who undertakes to personally supervise or manage the performance of a well contractor activity on the person's behalf or for any person, firm, or corporation. Also, "well contractor" shall be deemed to include a person who constructs, repairs, or abandons a well that is located on land owned or leased by that person.

(RRR) "Well contractor activity" means the construction, installation, redevelopment, repair, alteration, or abandonment of any well.

(SSS) "Well head" means the upper terminal of the well including adapters, ports, valves,

seals and other attachments.

(TTT) "Well operation permit" means a permit issued by the Guilford County Health Director to operate a well. This permit may include specific requirements for maintenance and operation, restrictions on water usage, responsibilities of the owner, and other requirements for the continued proper performance of the well.

(UUU) "Well permit" means an permit issued by the Guilford County Health Director permitting the construction, repair, or abandonment of any water supply well as defined in these rules.

(VVV) "Well seal" means an approved arrangement or device used to cap a well or to establish and maintain a junction between the casing or curbing of a well and the piping or equipment installed therein, to prevent contaminants from entering the well at the upper terminal.

(WWW) "Well system" means two or more wells connected to the same distribution or collection system or, if not connected to a distribution or collection system, two or more wells serving the same site.

(XXX) "Well system operations permit" means a permit issued by the Guilford County Health Director to the well owner to operate a well water supply system.

(YYY) "Well yield capacity" shall mean the maximum quantity of water that a well will yield continuously for one hour at the time of well completion.

(ZZZ) "Yield" means the amount of water or other fluid that can be extracted from a well under a given set of conditions.

SECTION III REGISTRATION

(A) Monitoring/Air Injection/Air Sparging/Recovery Contractor Registration

1. A Well Contractor is a person in trade or business who undertakes to personally supervise or personally manage the performance of a well contractor activity on the person's behalf or for any person, firm, or corporation. Each person, firm, or corporation should register all certified well contractors employed by that person, firm, or corporation. Only certified well contractors shall perform well contractor activities.

2. Registration should be accomplished, during the period from January 1 to January 31 of each year or such time as the Guilford County Health Department may determine by completing and submitting to the Guilford County Health Department registration application form provided by the Guilford County Health Department for this purpose. The application form shall be signed by an authorized agent for the person, firm, or corporation desiring registration in Guilford County.

3. Every person, firm or corporation engaged in the business of drilling, boring, coring, constructing, repairing, or abandoning monitoring wells, air injection or air sparging wells, or recovery wells in any manner in Guilford County must verify that any person performing well contractor activities in Guilford County is certified as a well contractor with the State of North Carolina in accordance with 15A NCAC 27 (North Carolina Well Contractor Certification Commission Rules).

(B) Well Contractor Registration

1. A Well Contractor is a person in trade or business who undertakes to personally supervise or personally manage the performance of a well contractor activity on the person's behalf or for any person, firm or corporation. Every person, firm, or corporation that employs persons performing Well Contractor activities in Guilford County should register annually with the Guilford County Health Department. Each person, firm or corporation should register all certified well contractors employed by that person, firm or corporation. Only certified well contractors shall perform well contractor activities.

2. Registration should be accomplished, during the period from January 1 to January 31 of each year or such time as the Guilford County Health Department may determine by completing and submitting to the Guilford County Health Department a registration application form provided by the Guilford County Health Department for this purpose. The application form shall be signed by an authorized agent for the person, firm, or corporation desiring registration in Guilford County. A Well Contractor referral list may be maintained by the Guilford County Health Director for notification purposes.

3. Every person, firm, or corporation to be registered as a well contractor in Guilford County must verify that any person performing well contractor activities in Guilford County is certified as a well contractor with the State of North Carolina in accordance with 15A NCAC 27 (North Carolina Well Contractor Certification Commission Rules).

(C) Pump Installer Registration

1. Installing, replacing, or repairing pumps or other equipment in wells, or disinfecting wells are well contractor activities requiring a Level D certification. All persons, firms, or corporations engaged in the business of installing, replacing, or repairing pumps or other equipment in wells, or disinfecting wells in Guilford County should register annually with the Guilford County Health Department.

2. Registration should be accomplished during the period from January 1 to January 31 of each year or such time as the Guilford County Health Department may determine by completing and submitting to the Guilford County Health Department a registration application form provided by the Guilford County Health Department for this purpose. The application form shall be signed by an

authorized agent for the person, firm, or corporation desiring registration in Guilford County. A Pump Installer referral list may be maintained by the Guilford County Health Director for notification purposes.

3. Every person, firm or corporation to be registered as a pump installer in Guilford County must verify that any person installing, replacing, or repairing pumps or other equipment in wells, or disinfecting wells in Guilford County is certified as a well contractor with the State of North Carolina in accordance with 15A NCAC 27 (North Carolina Well Contractor Certification Commission Rules).

SECTION IV VARIANCE

The Guilford County Health Director may grant a variance from any construction standard in these rules provided such variance is not in conflict with a requirement of NCAC 15A 2C .0100, NCAC 15A 2C .0200, NCAC 15A 2C .0300, or 15A NCAC 18A .3800. When a conflict exists, a variance must first be issued by the agency enforcing the state rule before a local variance may be issued. Any variance will be in writing and may be granted upon oral or written application to the Guilford County Health Director by the person responsible for the construction of the well or the property owner responsible for the proposed addition for which the variance is sought, if the Guilford County Health Director finds facts to support the following conclusions:

1. That the use of the well or the location of the proposed addition will not endanger human health and welfare of the groundwater.

2. That construction in accordance with the standards was not technically feasible in such a manner as to afford a reasonable water supply at a reasonable cost.

The Guilford County Health Director may require the variance applicant to submit such information as he deems necessary to make a decision to grant or deny the variance. The Guilford County Health Director may impose such conditions on a variance, or the use of a well or proposed addition for which a variance is granted as he deems necessary to protect human health and welfare and the groundwater resources. The brief findings of fact supporting any variance under this rule shall be in writing and made part of the variance.

CHAPTER 2

WELL CONSTRUCTION, REPAIR, AND ABANDONMENT FOR WATER SUPPLY WELLS

SECTION I APPLICATION

(A) A complete application shall be submitted to the Guilford County Health Director by an owner or authorized agent who intends to construct a water supply well. The following information will be required.

1. Names, addresses and phone numbers of the proposed well property owner and/or authorized agent.
2. Signature of owner or agent, including an authorized digital signature
3. Address and parcel identification number of the property where the proposed well is to be located.
4. A plat or complete site plan as defined in these rules.
5. Proposed use of water (domestic, irrigation, etc.)
6. ~~Intended use(s) of the property;~~
7. Other information deemed necessary by the Guilford County Health Director to determine the location of the property and any site characteristics such as existing sewage disposal systems, easements or rights of way, existing wells or springs, surface water or designated wetlands, chemical or petroleum storage tanks, landfills, waste storage, known underground contamination and any other characteristics or activities on the property or adjacent properties that could impact groundwater quality or suitability of the site for well construction;
8. Any current or pending restrictions regarding groundwater use as specified in G.S. 87-88(a); and
9. Any variances regarding well construction or location issued under 15A NCAC 02C .0118.

SECTION II WELL PERMITS

(A) Before issuing a well construction permit, the Guilford County Health Director shall conduct a field investigation to evaluate the topography, landscape position, available space and potential sources of groundwater contamination on or around the site on which a water well is to be located. The Guilford County Health Director shall issue a water well construction permit after determining the site can be permitted for a well meeting the rules of this chapter. Notwithstanding the above, the Guilford County

Health Director shall not issue a construction permit for a well in violation of restrictions regarding groundwater use established pursuant to G.S. 87-88(a). The construction permit shall include a site plan showing the location of potential sources of contamination and area(s) suitable for well construction.

The Guilford County Health Director shall issue a written notice of denial of a construction permit if it determines a water supply well cannot be constructed in compliance with the rules of this chapter. The notice of denial shall include reference to specific laws or rules that cannot be met and shall be provided to the applicant.

(B) No person shall construct, repair, or abandon a water well without first obtaining a well permit from the Director. A well repair permit is not required for repairs involving only pumps, pumping equipment, or well disinfection.

(C) If there is an improperly abandoned well(s) on the site, the construction permit shall be conditioned upon permanent abandonment of any improperly abandoned well(s) in accordance with the rules of this chapter.

(D) Water Supply Wells

1. It shall be unlawful for any person to commence any well contractor activities in Guilford County without first obtaining a well permit from the Guilford County Health Director. The well permit shall be obtained by the well owner or their authorized agent. The well permit is valid for one year from date of issuance. If construction or repairs have not been commenced within one year from the date of issuance of the well permit, the well permit then becomes invalid. When a well permit has become invalid, construction or repairs may not be commenced until a well permit has been updated and/or modified by the Guilford County Health Director or a new well permit is issued.
2. The location of all new proposed well water supplies in Guilford County shall comply with these rules and regulations. Well owners or their authorized agents may want to confer with the Guilford County Health Director, prior to any construction activity on the lot, to inspect the location of the water supply well. Any well site for a Community Water System or a Non-Transient Non-Community Water System shall be approved by a representative of the North Carolina Department of Environment and Natural Resources, Division of Environmental Health, Public Water Supply Section.
3. The well contractor shall maintain a copy of the well construction permit, well repair permit, or well abandonment permit on the job site at all times during the construction, repair or abandonment of the well and shall meet all the conditions of the permit.
4. A Guilford County Health Department representative is authorized to witness any well contractor activity or pump installation in Guilford County as part of his inspection. Failure of the owner or contractor to permit inspection of any material or observation of any well contractor activity or pump installation in Guilford

County will be grounds for the revocation of the well permit.

5. The Guilford County Health Director is authorized to revoke or suspend any well permits issued pursuant to these regulations upon the determination that these regulations are not being fully complied with.

SECTION III STANDARDS OF CONSTRUCTION

(A) Location

1. The well shall not be located in an area generally subject to flooding. Areas which have a propensity for flooding include those with concave slope, alluvial or colluvial soils, gullies, depressions and drainage ways. A water supply well shall not be located within a wetland as defined in 15A NCA 2B .0202 or any area where surface water or runoff will accumulate around the well.

2. Special consideration shall be given for wells located within a one-thousand-five-hundred foot radius around a point or source of established groundwater contamination. Detailed information must be obtained from the Guilford County Health Department prior to issuance of a well permit. Well permit requirements will be based upon this information.

3. The minimum horizontal separation between a well and potential sources of groundwater contamination which exist or have been permitted at the time the well is constructed, shall be as follows unless otherwise specified:

a. Septic tank and drain field .....100 ft.
b. Other sub-surface ground absorption waste disposal system.....100 ft.
c. Industrial or municipal sludge-spreading or wastewater irrigation sites...100 ft.
d. Water-tight sewage or liquid-waste collection or transfer facility constructed to water main standards in accordance with 15A NCAC 02T .0305(g)(2) or 15A NCAC 18A .1950(e), as applicable.....50 ft.
e. Other sewage or liquid-waste collection or transfer facility.....100 ft.
f. Cesspools and privies.....100 ft.
g. Animal feed lots or manure piles.....100 ft.
h. Fertilizer, pesticide, herbicide or other chemical storage areas.....100 ft.
i. Non-hazardous waste storage, treatment or disposal lagoons.....100 ft.
j. Sanitary landfills/hazardous waste landfills.....500 ft.
k. Other non-hazardous solid waste landfills, such as Land Clearing and Inert Debris (LCID) landfills.....100 ft.
l. Animal barns.....100 ft.
m. Building foundations, structural pilings, or building footprints.....50 ft.
n. Surface water bodies.....50 ft.
o. Chemical or petroleum fuel underground storage tanks systems regulated under 15A NCAC 2N:
(I) with secondary containment.....50 ft.
(II) without secondary containment.....100 ft.

p. Aboveground or underground storage tanks which contain petroleum fuels used for heating equipment, boilers, or furnaces.....100 ft.
q. Aboveground or underground liquefied petroleum gas storage tanks.....15 ft.
r. Cemetery or Burial Ground.....100 ft.
s. All other potential sources of ground water contamination.....100 ft.
t. Property boundaries .....10 ft.
u. Installation or extension of water-tight sewer lines near an existing well.....
.....see # 6 below

4. For a well serving a single-family residence where lot size or other fixed conditions preclude the separation distances specified in Subparagraph (A)(3) of this section, the required horizontal separation distances shall be the maximum possible but shall in no case be less than the following:

a. Septic tank and drain field.....50 ft.
b. Water-tight sewage or liquid waste collection or transfer facility.....50 ft.
c. Water-tight sewage or liquid-waste collection or transfer facility constructed to water main standards in accordance with 15A NCAC 02T .0305(g)(2) or 15A NCAC 18A .1950(e), as applicable.....25 ft.
d. Building foundations, structural pilings, or building footprints.....25 ft.
e. Cesspools or privies.....50 ft.
f. Animal barns.....50 ft.
g. Aboveground or underground storage tanks which contain petroleum fuels used for heating equipment, boilers, or furnaces,.....50 ft.
h. All other potential sources of ground water contamination.....50 ft.
i. Installation or extension of water-tight sewer lines near an existing well.....
.....see # 6 below

5. Separation distances as required in III(A)3 or III(A)4 of this regulation apply to all additions. Additions of a type not covered by III(A)(3) or III(A)(4) shall be located the maximum distance possible from any existing well but shall not be located less than twenty-five feet. No person shall place any new potential sources of groundwater contamination closer to the well than the separation distances specified in these rules.

6. When water-tight sanitary sewer lines are installed or extended, they shall maintain a minimum distance of one-hundred feet from any existing private or public water supply well. When this separation will not be maintained, water-tight sewer piping material, testing methods, and acceptability standards meeting water main standards shall be required, in which case the minimum separation distance may be reduced to twenty-five feet from an existing private water supply well and fifty feet from an existing public water supply well. Locating water-tight sewer lines closer to an existing water supply well shall necessitate proper abandonment of the well according to these rules. All appurtenances shall be outside the one-hundred foot radius.

7. Relation of Water Lines to Sewage

a. Lateral separation of sewage and water lines

Water lines shall be laid at least ten feet laterally from existing or proposed septic systems, septic tank, drain field, and water-tight sewage or liquid waste collection or transfer pipes. Water lines may be installed less than ten feet laterally from water-tight sewage or liquid waste collection or transfer pipes when both the water line and the water-tight sewage or liquid waste collection or transfer pipes are encased in pipes constructed of ferrous materials with joints that are equivalent to water main standards. Both the water line and the water-tight sewage or liquid waste collection or transfer pipes must remain encased until the horizontal separation distance is at least ten feet.

b. Crossing a water line over a water-tight sewage or liquid waste collection or transfer pipe

When it is necessary for a water line to cross over a water-tight sewage or liquid waste collection or transfer pipe, the water line shall be laid at such elevation that the bottom of the water line is at least eighteen inches above the top of the water-tight sewage or liquid waste collection or transfer pipe, unless local conditions or barriers prevent an eighteen -inch vertical separation - in which case both the water line and water-tight sewage or liquid waste collection or transfer pipe shall be encased in pipes constructed of ferrous materials with joints that are equivalent to water main standards for a distance of ten feet on each side of the point of crossing. A section of encasing pipe shall be centered at the point of crossing.

c. Crossing a water line under a water-tight sewage or liquid waste collection or transfer pipe

Whenever it is necessary for a water line to cross under a water-tight sewage or liquid waste collection or transfer pipe, both the water line and water-tight sewage or liquid waste collection or transfer pipe shall be encased in pipes constructed of ferrous materials with joints that are equivalent to water main standards for a distance of ten feet on each side of the point of crossing. A section of encasing pipe shall be centered at the point of crossing.

8. The well shall not be located in any public or private easement or right-of-way. This shall not apply to well easements.

9. A well or well system, serving more than one single-family dwelling but with a designed capacity of less than 10,000 gpd., must meet the separation requirements specified in subparagraph (A)(3) of this section.

10. A well or well system with a designed capacity of 10,000 gpd. or greater must be located a sufficient distance from known or anticipated sources of groundwater contamination so as to prevent a violation of applicable ground water quality standards, resulting from the movement of contaminants, in response to the operation of the well or well system at the proposed rate and schedule of

pumping.

11. Wells drilled for Community Water Systems or Non-Transient Non-Community Water Systems regulated by the NC Department of Environment and Natural Resources, Division of Environmental Health, Public Water Supply Section shall meet the siting and all other requirements of that Division.

12. Actual separation distances must conform with the most stringent of applicable federal, state or local requirements.

13. A well must be at a site that permits access for maintenance, repair, treatment, testing and such other attention as may be necessary. When a well easement is necessary, the access easement shall have a minimum width of ten feet and the easement shall extend a minimum of ten feet beyond the outside diameter of the casing.

14. After receiving a permit to construct a water well, the property owner or his agent shall notify the Guilford County Health Director prior to well construction if any of the following occur:
    a. The separation criteria specified in this section cannot be met;
    b. The residence or other structure is located other than indicated on the permit;
    c. The use of the structure is changed from the use specified on the permit;
    d. The septic system needs to be changed from the location indicated on the permit;
    e. Landscaping changes have been made that may affect the integrity of the well;
    f. There are current or pending restrictions regarding groundwater use as specified in G.S. 87-88(a);
    g. The water source for any well intended for domestic use is adjacent to any water-bearing zone suspected or known to be contaminated; or
    h. Any other changes occur in the information provided in the application for the well permit.

(B) Drilling Fluids and Additives

1. Drilling fluids and additives shall not contain organic or toxic substances or include water obtained from surface water bodies and may be comprised only of:

    a. the formational material encountered during drilling; or

    b. materials manufactured specifically for the purpose of borehole conditioning or water well construction.

2. Lubricants used on drill pipe and down hole hammers and lubricating liquids injected into the air flowing through the drill stem shall be designed and approved for use in potable water supply wells

3. Drilling fluids shall be obtained from a potable source or shall be disinfected by adding chlorine to produce a one-hundred parts per million residual in the drilling

fluids prior to use.

(C) Source of Water

1. Shall be at least forty feet below land surface.

2. Shall be from a water bearing zone that does not contain non-potable water.

(D) Casing

1. All water bearing zones that contain non-potable water shall be adequately cased and cemented off so that the contamination of underlying or overlying zones shall not occur.

2. Every well shall be cased with the bottom of the casing adequately seated and sealed to a minimum depth of at least forty feet below the surrounding land surface.

3. The top of the casing shall be terminated by the well contractor at least twelve inches above the surrounding land surface. Prior to removing his equipment from the site, the well contractor shall seal the top of the casing with a water-tight cap or well seal to preclude the entrance of contaminants into the well.

4. The well shall be adequately cased to prevent formational material from entering the well after the well has been developed and completed by the well contractor.

5. The casing in wells constructed to obtain water from a consolidated rock formation shall be:

   a. adequate to prevent any formational material from entering the well in excess of the levels specified in paragraph (H) of this section; and

   b. firmly seated and sealed at least five feet into the rock.

6. When non-rotary equipment is used to construct a well in a consolidated rock formation an outer casing shall be used down to the consolidated rock. The inside diameter of the outer casing shall be at least 1¼ inches greater than the outside diameter of the finish casing used to construct the well. The minimum inside nominal diameter of the finish casing shall be 6.125 inches. If the outer casing is not removed, it must be grouted according to Ch. II Sec. III (E)(3), (5) and (9) and the annular space between the finish casing and outer casing shall be completely filled with neat-cement grout or liner sand cement grout.

7. The casing in wells constructed to obtain water from an unconsolidated rock formation (such as gravel, sand or shells), shall extend at least one foot into the top of the water bearing formation.

8. The Guilford County Health Director may inspect the casing material before it is

installed, as the casing is installed in a bore hole and/or after the casing is set. The well contractor shall strictly comply with the inspections scheduling guideline as outlined in the most recent Guilford County "Inspection of Wells That Supply Water for Human Consumption" guideline.

9. Galvanized Steel Well Casing

   a. The casing shall be new.

   b. The casing shall be seamless or electric-resistance welded galvanized steel pipe. Galvanizing shall be done in accordance with requirement of ASTM A53/A53M-06a.

   c. The casing, threads and couplings shall meet or exceed the specifications of ASTM A53/A53M-06a or A589/A589M-06.

   d. The minimum wall thickness for a given diameter shall equal or exceed that specified in Table 1.

   e. Each length of galvanized steel well casing shall be legibly marked by rolling, stamping or stenciling to show the name or brand of the manufacturers and ASTM designation number.

   f. Shall have water-tight joints that are electrically welded or threaded and coupled with heavy recessed-type couplings. The couplings should cover the threads when power tight.

   g. Shall be equipped with a drive shoe if the casing is driven in a consolidated rock formation. The drive shoe shall be made of forged, high carbon, tempered seamless steel and shall have a beveled, hardened cutting edge. A drive shoe shall not be required for wells in which a cement or concrete grout surrounds and extends the entire length of the casing.

10. Thermoplastic Well Casing

   a. The casing shall be new.

   b. The casing and joints shall meet or exceed all the specifications of ASTM F480-06b, except that the outside diameters shall not be restricted to those listed in ASTM F480-06b.

   c. Solvent cement used for joining sections of thermoplastic well casing, liner pipe, pump pipe or any connections thereto shall bear the National Sanitation Foundation (NSF) seal of approval for use on potable water supply systems and shall be marked with the designation ASTM D-2564 as meeting all the requirements of ASTM D-2564, requirements and recommendations of ANSI/ASTM.

d. Shall have a minimum wall thickness and tolerance which meets or exceeds requirements for SDR-21 thermoplastic water well casing pipe for a maximum depth of one-hundred-eighty-five feet. Galvanized steel well casing as specified in III (D) (9) shall be required for the entire length of the casing for any well in which the casing depth exceeds one-hundred-eighty-five feet.

e. Shall be equipped with a coupling or other device approved by the manufacturer of the casing that is sufficient to protect the physical integrity of the thermoplastic casing during the processes of seating and grouting the casing and subsequent drilling operations.

f. Shall be installed in straight, obstruction free bore holes only.

g. Thermoplastic casing shall not be driven into any formation.

11. Stainless Steel Well Casing

a. The casing shall be new.

b. Stainless steel casing, threads and couplings shall conform in specifications to the general requirements in ASTM A530/A530M-04a and also shall conform to the specific requirements in the ASTM standard that best describes the chemical make-up of the stainless steel casing that is intended for use in the construction of the well.

c. Stainless steel casing shall be equipped with a drive shoe if the casing is driven in a consolidated rock formation. The drive shoe shall be made of forged, high carbon, tempered seamless steel and shall have a beveled, hardened cutting edge. A drive shoe will not be required for wells in which a cement or concrete grout surrounds and extends the entire length of the casing.

d. Stainless steel casing shall have a minimum wall thickness that is equivalent to standard schedule number 10S.

(E) Grouting

1. The well contractor shall contact the Guilford County Health Director to schedule a grout inspection before grouting a water well. Contact shall include the location, permit number and anticipated time for grouting each water well. The Guilford County Health Director may inspect the grout and annulus before the grout is placed around the casing and observe as the grout is placed around the casing. The well contractor shall strictly comply with the inspections scheduling guideline as outlined in the Guilford County "Inspection of Wells That Supply Water for Human Consumption" guideline.

2. Upon completion of a grout inspection, the Guilford County Health Director shall provide a written certification on the well permit that a grout inspection was

completed and is in compliance with these rules. When the Guilford County Health Director is unable to conduct a grout inspection within one hour of the scheduled time, the well contractor may grout a well without a grout inspection by the Guilford County Health Director. The well contractor shall provide a written certification to the Guilford County Health Director that the well has been grouted in compliance with the rules of this chapter. A completed Residential Well Construction Record form GW-1a indicating the well was grouted in compliance with the rules of this chapter shall serve as the well contractor's grout certification. For purposes of issuing a certificate of completion, the well contractor's grout certification shall be accepted by the Guilford County Health Director as evidence the grout complies with these rules if the Guilford County Health Director:

a. was contacted by the well contractor to schedule a grout inspection;

b. was unable to inspect the grouting of the well within one hour following the scheduled time; and

c. upon final inspection, finds no evidence to indicate the well grout does not comply with these rules.

3. Casing shall be grouted to a minimum depth of twenty feet below land surface.

4. Casing shall be grouted as necessary to seal off, from the producing zone(s), all aquifers or zones with water containing organic or other contaminants of such type and quantity as to render water from those aquifers or zones unsafe or harmful or unsuitable for human consumption and general use.

5. Where grouting is required by the provisions of this section, the grout shall extend outward from the casing wall to a minimum thickness equal to either one-third of the diameter of the outside dimension of the casing or two inches, whichever is greater; excepting, however, that large diameter bored wells shall meet the requirement of subparagraph (E) (13) of this section.

6. Bentonite grout may be used in that portion of the bore hole that is at least three feet below land surface. Bentonite grout must be placed in the annular space by use of either the pumping or pressure method. That portion of the bore hole above the bentonite grout up to land surface shall be filled with a cement or concrete grout.

7. The grout shall be placed around the casing by one of the following methods:

a. Pressure- grout shall be pumped or forced under pressure through the bottom of the casing until it fills the annular area around the casing and overflows at the surface.

b. Pumping - grout shall be pumped into place through a hose or pipe extended to the bottom of the annular space which can be raised as the grout is applied.

The grout hose or pipe shall remain submerged in grout during the entire application.

c. Other - the annular space shall be completely filled with cement grout by any other method that will insure complete filling of the space, provided that the annular area is clean, dry and does not contain water. If the grout contains bentonite clay it must be emplaced by either the pumping or pressure method.

8. Where consolidated rock is encountered at a depth of less than twenty feet below land surface such that the annular space around the casing (as required by E (5) of this section) may not be kept free of formation material from the drilling process to a minimum depth of twenty feet, the grout shall be placed around the casing immediately following the placement of the casing in the bore hole. Subsequent drilling operations may not continue until such time as the grout remains permanently in place around the well casing.

9. If an outer casing is installed, it shall be grouted by either the pumping or pressure method. The grout shall extend outward from the casing wall to a minimum thickness equal to either one-third of the diameter of the outside dimension of the casing or two inches, whichever is greater.

10. The liquid and solid components of all grout mixtures shall be thoroughly blended prior to emplacement below land surface.

11. The well shall be grouted within five working days after the casing is set.

12. No additives which will accelerate the process of hydration shall be used in grout for thermoplastic well casing.

13. For large diameter wells cased with concrete pipe or ceramic tile, the following shall apply:

    a. The bore hole shall have a minimum diameter of six inches larger than the outside diameter of the casing.

    b. The annular space around the casing shall be filled with grout to a depth of at least twenty feet below land surface.

    c. The annular space around the casing below the grout shall be filled with sand or gravel.

(F) Well Screen

1. The well, if constructed to obtain water from an unconsolidated rock formation, shall be equipped with a screen that will prevent the entrance of formation material into the well after the well has been developed and completed by the well contractor.

2. The well screen shall be of a design to permit the optimum development of the aquifer with minimum head loss consistent with the intended use of the well and with screen placement at intervals which allow for optimal water movement. The openings shall be designed to prevent clogging and shall be free of rough edges, irregularities or other defects that may accelerate or contribute to corrosion or clogging.

3. Multi-screen wells shall not connect aquifers or zones which have differences in water quality which would result in contamination of any aquifer or zone.

(G) Gravel and/or Sand-Packed Wells

1. In constructing a gravel and/or sand-packed well:

    a. The packing material shall be composed of quartz, granite, or similar mineral or rock material and shall be clean, of uniform size, water-washed and free from clay, silt or other deleterious material.

    b. The size of the packing material shall be determined from a grain size analysis of the formation material and shall be of a size sufficient to prohibit the entrance of formation materials into the well in concentrations above those permitted by paragraph (H) of this section.

    c. The packing material shall be placed in the annular space around the screens and casing by a fluid circulation method, preferable through a conductor pipe to insure accurate placement and avoid bridging.

    d. The packing material shall be disinfected.

    e. Centering guides must be installed within five feet of the top packing material to insure even distribution of the packing material in the bore hole.

2. The packing material shall not connect water bearing or zones which have differences in water quality that would result in deterioration of the water quality in any water bearing zone.

(H) Well Development

1. All water supply wells shall be developed by the well contractor.

2. Development shall include removal of formation materials, mud, drilling fluids and additives such that the water contains no more than:

    a. Five milliliters per liter of Settleable solids; and

    b. Ten NTUs of turbidity as suspended solids.

3. Development shall not require efforts to reduce or eliminate the presence of

dissolved constituents which are indigenous to the ground water quality in that area. Typical dissolved constituents include, but are not limited to aluminum, calcium, chloride, iron, magnesium, manganese, sodium, and sulfate.

4. Upon completion of the well, the well shall be sufficiently free of obstacles including formation material as necessary to allow for the installation and proper operation of pumps and associated equipment.

5. The finished nominal diameter of the well at the depth of pump placement shall be a minimum $1^{7}/_{8}$ inches greater than the nominal diameter of the pump and/or motor. This shall not apply to wells which have a liner installed according to Section VI of this chapter.

(I) Well Yield

Well yield shall be reported in whole numbers to the nearest gallon per minute (gpm) for wells with one or more full gallon(s) per minute. Well yield shall be reported the nearest one-half (gpm) for wells with a yield of less than one full (gpm). The following scale shall be used to determine minimum well depths approved for specified amounts of yield for a well serving one single family dwelling.

GPM	Minimum Well Depth
½ or less	440'
1	360'
2	320'
3	280'
4	240'
5	200'
6	180'
7	160'
8	140'
9	120'
10-19	100'
20 or more	80'

In determining compliance with the scale, it shall be confirmed that the static water level is fifty feet or less from the surface of the ground. If the static water level exceeds fifty feet from the surface of the ground and the yield is less than eight (gpm), the total well depth shall be increased by the amount of static in excess of fifty feet from the surface of the ground. In cases where an individual property owner is drilling a well for his/her personal and immediate family use, a waiver may be signed, notarized and recorded with the deed which would allow the well to be drilled less than the required depth. However, such a waiver shall specify and require that the subject well be drilled meeting the depth/yield requirements as specified by Guilford County Well Rules in effect at the time ownership of the property changes. In cases where property owners/authorized agents indicate that a well is not producing according to the Record of Construction within one year of completion, the well contractor shall perform a pump test in the presence of the Guilford County Health Director to determine the yield. The Guilford County Health Director shall take appropriate actions upon observing such a well, provided that he deems the well accessible to equipment needed to complete any necessary repairs.

In cases where a well or well system is being constructed for the purpose of serving multiple family residences or other operations requiring high water usage, the well yield shall be consistent with the planned use as outlined on the well permit. The depth/yield requirements shall meet or exceed the requirements for a well serving one single family dwelling.

When submitting the Record of Construction for non-public water supply wells serving facilities other than one single family dwelling, the pump installer shall submit the specific brand and model information for the pump that is installed in the well. The Guilford County Health Director shall review the well Record of Construction, the Pump Record of Construction, and other data.

(J) Well Contractor Identification Plate

1. An identification plate showing the well contractor and his individual certification number shall be installed on the well within seventy-two hours after the drilling is complete.

2. The identification plate shall be constructed of a durable waterproof, rustproof metal or other material approved as equivalent by the Department of Environment and Natural Resources, Division of Water Quality, Aquifer Protection Section.

3. The identification plate shall be permanently attached to either the aboveground portion of the well casing, surface grout pad, or enclosure floor around the casing where it is readily visible, easily readable, and in a manner that does not obscure the information on the identification plate. When attaching the identification plate to the aboveground portion of the well casing, rivets, non-removable fasteners, or permanent type adhesive shall be used. Self-tapping screws shall not be used to attach the identification tag to the well casing.

4. The identification plate shall not be removed by any person.

5. The identification plate shall be stamped with a permanent legible marking to show the:
   a. total depth of well
   b. casing or liner depth (ft.) and inside diameter (in.);
   c. screened interval of screened wall
   d. packing interval of gravel or sand-packed wells;
   e. yield, in gallons per minute (gpm) or specific capacity in gallons per minute per foot of drawdown (gpm/ft-dd)
   f. static water level and date measured; and
   g. date well was completed or lined.

(K) Pump Installer Identification Plate

1. An identification plate showing the well contractor and his individual certification number shall be installed on the well within seventy-two hours after completion of the pump installation.

2. The identification plate shall be constructed of a durable waterproof, rustproof, metal or other material approved as equivalent by the Department of Environment and Natural Resources, Division of Water Quality, Aquifer Protection Section.

3. The identification plate shall be permanently attached to either the aboveground portion of the well casing, surface grout pad or enclosure floor around the casing where it is readily visible, easily readable, and in a manner that does not obscure the information on the identification plate. When attaching the identification plate to the aboveground portion of the well casing, rivets, non-removable fasteners, or permanent type adhesive shall be used. Self-tapping screws shall not be used to attach the identification tag to the well casing.

4. The identification plate shall not be removed by any person.

5. The identification plate shall be stamped with a permanent legible marking to show the:

   a. date the pump was installed
   b. the depth of the pump intake, and
   c. the horsepower rating of the pump.

(L) Well Head Completion and Equipment

1. The well pump must be installed in the well and the well head completed within thirty days of the date construction is begun on the well, or the well must be temporarily or permanently abandoned.

2. The top of the casing shall be cut off smooth and level, be free from dents and

cracks, and shall terminate at least eight inches above the concrete slab around the casing where a four inch thick slab has been installed (the top of the casing shall be at least twelve inches above the surrounding land surface).

3. The identification plate, if removed or obscured during pump installation shall be relocated and permanently attached to the aboveground portion of the well casing, surface grout pad or enclosure floor around the casing where it is readily visible, easily readable, and in a location that does not obscure the information on the identification plate.

4. All piping, wiring, and vents shall enter the well at least twelve inches above land surface, except where pitless adapters or pitless units are used, and shall be adequately sealed to preclude the entrance of contaminants into the well. Waterproof caulk shall be used at the wiring penetration through the well seal.

5. Every well shall be equipped by the person completing the well head with a useable access port.

   a. The access port shall be located directly on top of the well if the pump is offset from the well.

   b. For wells on which the pump is installed directly over the well, an access port pipe shall be installed through the pump base or outside the well casing, and terminate inside the well casing at some point below the base of the pump.

   c. The access port shall have a minimum inside diameter of one-half inch, so that the position of the water level may be determined at any time.

   d. The access port shall be installed and maintained in such a manner as to prevent the entrance of water, dust, insects or other foreign material, and to permit ready access for water level measurements.

6. Every well that flows under natural artesian pressure shall be properly equipped with a check valve sized to the overflow line diameter to prevent back siphonage. Well owners shall be responsible for the installation, operation, and maintenance of such equipment.

7. Pitless adapters or pitless units shall be allowed as a method of well head completion under the following conditions:

   a. The pitless device shall be manufactured specifically for the purpose of water well construction;
   b. Design, installation and performance standards shall be those specified in PAS-97(04) "WSC Performance Standards And Recommended Installation Procedures for Sanitary Water Well Pitless Adapters, Pitless Units, and Well Caps" as adopted by the Water System Council's Pitless Adapter Division;
   c. The pitless device shall be compatible with the well casing;
   d. The top of the pitless device shall extend at least twelve inches above land

surface;

e. The pitless device shall have an access port.

f. If a pitless adapter or pitless unit is used as a method of well head completion, the well is not required to have a cover.

g. If a pitless adapter or pitless unit is used as a method of well head completion, a sample tap shall be installed between the pump and the pressure tank by the person installing the pump for the purpose of obtaining water samples.

8. Each new well shall be equipped with a cover or enclosure which is free of cracks, holes, etc. and is determined to be approved by the Guilford County Health Director. No single dimension of the cover or enclosure shall exceed seven feet in length and it should be secured firmly to the ground surface, while still being easily accessible for inspection. If a concrete floor is poured within the cover or enclosures, a drain hole must be provided to allow water to drain out.

   Wells constructed after July 1, 1993, and serving an establishment regulated by 15A NCAC 18A, shall have a slab which complies with Section .1700 - Protection of Water Supplies.

   A new well designed to serve a water supply system where system components will require an area with an enclosure having a single dimension exceeding seven feet in length, shall have a four-inch thick concrete floor. The enclosure shall be anchored to the floor and shall have a drain hole provided to allow water to drain out, with the well being accessible for inspections.

9. The pumping capacity of the pump shall be consistent with the intended use and yield characteristics of the well.

10. The finished nominal diameter of the well at the depth of pump placement shall be a minimum $1^7/_8$ inches greater than the nominal diameter of the pump and/or motor. This shall not apply to wells which have a liner installed according to Section VI of this chapter.

11. The pump and related equipment for the well shall be conveniently located to permit easy access and removal for repair and maintenance.

12. The base plate of a pump placed directly over the well shall be designed to form a watertight seal with the well casing or pump foundation.

13. In installations where the pump is not located directly over the well, the annular space between the casing and pump intake or discharge piping shall be closed with a water tight seal preferably designed specifically for this purpose.

14. The well shall be properly vented at the well head to allow for the pressure changes within the well except when a suction lift type pump is used.

15. A sample tap shall be installed between the pump and the pressure tank by the person installing the pump for the purpose of obtaining water samples. Threaded

hosebibbs shall be equipped with an anti-siphon device, or a sample tap not threaded for hose connection shall be installed. In the case of offset jet pump installations, the sample tap shall be installed on the return (pressure) side of the jet pump installations.

16. The sample tap must be located in the piping and positioned such that a sample may be obtained by placing the sample bottle underneath the sample tap without interference from the well cover, enclosure, slab or any part of the well head.

17. A priming tee shall be installed at the wellhead in conjunction with offset jet pump installations.

18. Joints of any suction line installed underground between the well and pump shall be tight under system pressure.

19. The drop piping and electrical wiring used in connection with the pump shall meet all applicable underwriters' specifications. Waterlines running from the well to the pressure tank shall be a minimum 160 psi @ 73.4° Fahrenheit rating, installed at least twenty-four inches below land surface, and shall be sleeved when passing through or under the building foundation or footing. When waterlines enter a basement, they shall meet the requirements of the North Carolina Plumbing Code for water distribution pipe. When the pressure tank is not located within the structure where the water distribution system is constructed, the waterlines running from the pressure tank to a point five feet from the structure housing the distribution system shall be a minimum 160 psi @ 73.4° Fahrenheit rating, installed at least twenty-four inches below land surface, and shall be sleeved when passing through or under the building foundation or footing.

20. Contaminated water shall not be used for priming the pump.

SECTION IV DISINFECTION OF WELLS

(A) All water supply wells shall be disinfected upon completion of construction, maintenance, repairs, pump installation and testing as follows:

1. Chlorine shall be placed in the well in sufficient quantities to produce a free chlorine residual of at least one-hundred parts per million in the well. The chlorine shall be placed in the well by one of the following or equivalent methods:

   a. Chlorine granules or tablets shall be placed in the top of the well and allowed to settle to the bottom of the well.

   OR

   b. Chlorine solution shall be placed in the bottom of the well by using a bailer or by pouring the solution through the drill rod, hose or pipe placed in the bottom of the well. The solution shall be flushed out of the drill rod, hose or pipe

using water or air.

2. The chlorinated well water shall then be pumped through a hose attached to a hose bibb back into the top of the well so as to rinse the well casing, pump column and any other equipment above the water level with chlorine as a part of the disinfecting process.

3. The chlorinated water shall stand in the well for a period of at least twenty-four hours, and then be pumped until the system is free of any chlorine residual.

4. The Guilford County Health Department recommends that the well not be used as a source of drinking water supply until such time as water samples collected from the well indicate that the well is of potable quality.

5. Other materials and methods of disinfection, at least as effective as those in item (A) (1) of this section may be used upon prior approval by the Guilford County Health Director.

SECTION V FINAL INSPECTION AND SAMPLING

(A) Upon completion of construction of a water well, the Guilford County Health Director shall complete an "as built" drawing of the well location. The well contractor shall submit a well Record of Construction to the Guilford County Health Director. Upon completion of construction or repair of a water well, the Guilford County Health Director shall inspect the well and issue a Certificate of Completion. Prior to the issuance of a Certificate of Completion, the Guilford County Health Director shall: verify that the well was constructed in the designated area and according to the well construction permit and these rules. The Guilford County Health Director shall inspect the grout around the casing, inspect the well head after the well seal is in place and obtain a well construction record from the Certified Well Contractor. No person shall place a water well into service without first having obtained a Certificate of Completion.

(B) Sample Collection

1. Within thirty days after issuing a certificate of completion for a newly constructed or repaired water well, the Guilford County Health Director shall obtain water samples and submit them to a certified laboratory for analyses or ensure that the water obtained from the well has been sampled and tested by a certified laboratory, in accordance with these rules.

2. Upon final approval of a new or repaired well located within a one-thousand-five-hundred foot radius around a point or source of established groundwater contamination, analysis for volatile and semi-volatile organic compounds, pesticides, inorganic compounds, or nitrates shall be performed by the State Public Health Laboratory or other laboratory certified by the State of N.C.

3. Samples collected from water wells pursuant to the rules of this chapter shall be collected by an employee of the Guilford County Health Department, or a certified laboratory. The sample collector shall use aseptic sampling techniques for collection of coliform bacteria and sampling techniques and containers for chemical constituents following methods described in 40 Code of Federal Regulations 141.23 Inorganic Chemical Sampling and Analytical Requirements and 40 Code of Federal Regulations 143.4 Monitoring, which are incorporated by reference including any subsequent amendments, additions or editions. A copy may be obtained from the National Archives and Records Administration through their website at http://www.gpoaccess.gov/cfr/index.html.

4. Sample collectors shall be trained in accordance with guidance developed by the Department of Environment and Natural Resources.

5. Water samples shall be collected from the sample tap at the well or the closest accessible collection point to the water source with a tap capable of being disinfected, provided the sampling point shall precede any water treatment devices.

6. It is the responsibility of the well owner to provide access and a source of power for the purpose of collecting the required water samples.

7. For all newly constructed or repaired water wells, samples for total coliform and fecal coliform bacteria shall be collected after the disinfectant agent has been flushed from the well and water supply system. The water shall be determined to be free of disinfectant before collection of samples for bacteria. Required water samples shall not be collected from wells that are not constructed and located in accordance with the rules of 15A NCAC 02C .0100 and .0300.

8. Samples shall be transported to the laboratory following the procedures for sample preservation and within holding times required in 40 Code of Federal Regulations 141.21(f) Analytical Methodology, 141.23 Inorganic Chemical Sampling and Analytical Requirements, and 143.4 Monitoring, which are hereby incorporated by reference including any subsequent amendments, additions or editions. Copies may be obtained from the National Archives and Records Administration through their website at http://www.gpoaccess.gov/cfr/index.html.

9. Additional or retest samples may be collected if:

   a. during the permitting, construction and sampling process, information indicates the potential for other contaminants to be present in the groundwater source; or

   b. if necessary to confirm initial testing results.

(C) Sample Analysis

1. Water samples shall be analyzed in the North Carolina State Laboratory of Public Health or a certified laboratory.

2. A water sample shall be tested for total coliform bacteria and if present, further analyzed for the presence of fecal coliform bacteria or E. coli.

3. A water sample from a newly constructed well shall be analyzed for Arsenic, Barium, Cadmium, Chromium, Copper, Fluoride, Lead, Iron, Magnesium, Manganese, Mercury, Nitrate, Nitrite, Selenium, Silver, Sodium, Zinc and pH.

4. Testing protocols shall follow EPA methods as published in the applicable sections of the most recent 40 CFR 141 and 143, Federal Register updates and the North Carolina Drinking Water Laboratory Certification rules of Section 10A NCAC 42D. Copies may be obtained from the National Archives and Records Administration through their website at http://www.gpoaccess.gov/cfr/index.html.

(D) Reporting

1. Laboratories shall report results of chemical and bacteriological water sample analyses for each new water well to:

   a. the Guilford County Health Department;

   b. ~~the DENR Private Water Supply Protection Branch; and~~

   c. the DHHS Division of Public Health, Epidemiology Section, Occupational and Environmental Epidemiology Branch.

2. Certified laboratories reporting results of sampling required by the rules of this section shall use the reporting format developed by the North Carolina State Laboratory of Public Health for reporting well water sample results and shall include well identification information and a guide for interpreting sample results.

3. For the purposes of any notices required pursuant to the rules of this chapter, notice shall be mailed to "Division of Environmental Health, On-Site Water Protection Section, North Carolina Department of Environment and Natural Resources," 1642 Mail Service Center, Raleigh, NC 27699-1642.

(E) Data Review

For all well sampling data where chemical or biological contaminants are detected exceeding the Maximum Contaminant Levels (MCLs) for public drinking water, as defined in 15A NCAC 18C, the North Carolina Occupational and Environmental Epidemiology Branch (OEEB) shall provide the following to the Guilford County Health Department:

1. information about the contaminant(s) exceeding public drinking water MCLs;

2. recommendations for water use limitations or treatment options to reduce exposure to a level comparable to meeting public drinking water MCLs; and

3. recommendations about the need for and the frequency of repeat sampling. The Guilford County Health Director shall provide information to the well owner or respective lease holder concerning chemical and biological contaminants exceeding public drinking water MCLs and the need for exposure limitation, remediation, and/or future sampling.

SECTION VI WELL MAINTENANCE AND REPAIR

(A) Every well shall be maintained by the owner in a condition whereby it will conserve and protect the groundwater resources, and whereby it will not be a source or channel of contamination to the groundwater.

(B) Any work that necessitates breaking the seal of a well that has the well head terminating below ground (buried seal) shall include extending the well casing above land surface.

(C) All construction and materials used in the maintenance, replacement or repair of any well shall meet the requirements for new installations.

(D) The Guilford County Health Director may inspect the liner and packer materials before they are installed, as they are installed in the casing and bore hole and/or after the liner is set. The well contractor shall strictly comply with the inspections scheduling guideline as outlined in the most recent Guilford County "Inspection of Wells that Supply Water for Human Consumption" guideline where casing (liner) and grout inspections are addressed.

(E) ANSI/NSF International (NSF) approved PVC pipe rated at 160 psi or greater may be used for liner pipe. The annular space around the liner pipe shall be at least five-eighths inches and shall be completely filled with neat-cement grout or liner sand cement grout. Bentonite clay shall not be used in grouting a liner. The grout shall be mixed until it is capable of being poured through a screen or strainer which will not permit particles of greater than one-half inch to pass through. The well liner shall be completely grouted within ten working days after the liner has been installed.

(F) The Guilford County Health Director shall not approve any well which has the uppermost end of the casing terminating below land surface.

(G) All well repairs shall be completed with the wellhead terminating at least twelve inches above land surface

(H) Repairs to any well completed with the well head terminating below ground (buried seal) shall include extending the well casing above land surface. The extension shall be made as follows:

1. The extension casing shall be welded or bonded to the existing casing around the outside of the joint, providing a watertight seal.

OR

A sleeve shall be forced over the existing casing with at least six inches of overlap, providing a watertight seal.

2. Grout shall be placed around the casing, extending from land surface to a depth of twenty feet. The grout thickness shall be as specified in these regulations. In lieu of twenty feet of grout for those wells drilled prior to 1972 only, a liner properly installed and grouted inside the existing casing, extending below the bottom of the existing casing and firmly sealed a minimum of five feet into consolidated rock, shall be acceptable as meeting this requirement.

(I) An accepted alternative method of well repair is permitted only for wells drilled prior to 1972 that are the primary water supply source. A sleeve shall be forced over the existing casing with at least six inches of overlap. Cement grout shall be placed around the casing, extending from land surface to a depth of at least one foot below the joint formed by the casings. The grout thickness shall be as specified in these regulations. This alternative method of repair shall not apply to wells drilled after January 1, 1972. This procedure involves extending the existing casing. It is therefore a well contractor activity and may only be performed by a certified well contractor with a Level C or higher certification. This repair does not meet the requirement of grouting to a depth of twenty feet and the well shall not be considered a properly protected water supply well, but would meet the Guilford County repair standard.

(J) Broken, punctured or otherwise defective or unserviceable casing, screens, fixtures, seals or any part of the well head shall be repaired or replaced within thirty days of notification by the Guilford County Health Director or the well shall be permanently abandoned.

(K) Prior to a repaired well being returned to service, the well shall be redeveloped to remove biofilm detritus or formational material detritus from the well. The methods of well redevelopment include, but are not limited to, the methods listed in Chapter I Section II (UU) "Redevelopment". The method of well redevelopment shall be listed on the well's record of repair.

(L) Any repair, pump maintenance, or pump replacement shall be completed by disinfection of the well and water supply system in accordance with Section IV of this chapter and the well head completed in accordance with Sections III(J), III(K) and III(L) of this chapter.

SECTION VII ABANDONMENT OF WELLS

(A) Temporarily Abandoned Wells

1. Temporarily abandoned wells shall be cased and grouted in accordance with this chapter.

2. Temporarily abandoned wells shall be sealed at the top of the casing with a watertight cap compatible with casing and installed such that it cannot be removed without the use of hand or power tools.

3. Temporarily abandoned wells shall be maintained such that they are not a source or channel of contamination to groundwater.

(B) Permanently Abandoned Wells

1. The casing in any well to be permanently abandoned shall be grouted in accordance with this chapter or removed.

2. The entire depth of the well shall be sounded before it is sealed to ensure freedom from obstructions that may interfere with sealing operations.

3. The well shall be thoroughly disinfected according to Section IV (A) prior to sealing.

4. Procedures for permanent abandonment of wells, other than bored or hand dug wells

   a. Wells constructed in consolidated rock formations or that penetrate zones of consolidated rock may be filled with cement grout, bentonite grout, sand, gravel or drill cuttings opposite the zones of consolidated rock. The top of the sand, gravel or cutting fill shall be at least ten feet below the bottom of the casing. The remainder of the well shall be filled with cement grout or bentonite grout only. For any well in which the depth of casing or the depth to the bedrock is not known or cannot be confirmed, the entire depth of the well shall be filled with cement grout or bentonite grout up to land surface.

   b. Wells constructed in unconsolidated rock formations other than bored or hand dug shall be completely filled with neat cement grout or bentonite grout by introducing it through a pipe extending to the bottom of the well which can be raised as the well is filled.

   c. Test wells less than twenty feet in depth which do not penetrate the water table shall be abandoned in such a manner as to prevent the well from being a channel allowing the vertical movement of water or source of contamination to the groundwater supply.

   d. Test wells or borings that penetrate the water table shall be abandoned by completely filling with cement grout or bentonite grout.

   e. Gravel packed wells in which the casing and screen have not been removed

shall be abandoned by injecting neat cement grout or bentonite grout into the well filling it from the bottom of the casing to the top.

5. Procedures for permanent abandonment of bored wells or cased hand dug wells constructed into unconsolidated material.

   a. Remove all plumbing or piping into the well, along with any obstructions inside the well.

   b. Remove as much of the well tile casing as possible, but no less than to a depth of three feet below land surface;

   c. Remove all soil or other subsurface material present down to the top of the remaining well casing, and extending to a width of at least twelve inches outside of the well casing on all sides

   d. Fill the well up to the top of the remaining casing with cement grout, concrete grout, or bentonite grout.

   e. Pour a one foot thick concrete grout or cement grout plug that fills the entire excavated area above the top of the casing, including the area extending on all sides of the casing out to a width of at least twelve inches on all sides.

   f. Complete the abandonment process by filling the remainder of the well above the concrete or cement plug with additional concrete grout, cement grout, or soil.

6. Procedures for permanent abandonment of uncased hand dug wells constructed into unconsolidated material.

   a. Remove all plumbing or piping into the well, along with any obstructions inside the well.

   b. Remove all soil or other subsurface material present down to a depth of three feet below land surface and extending to a width of at least twelve inches outside of the well diameter on all sides.

   c. Fill the well up to the top of the original diameter with cement grout, concrete grout, bentonite grout, or dry clay compacted in place.

   d. Pour a one ~~(1)~~ foot thick concrete grout or cement grout plug that fills the entire excavated area above the top of the original diameter, including the area extending on all sides of the original diameter out to a width of at least twelve ~~(12)~~ inches on all sides.

   e. Complete the abandonment process by filling the remainder of the well above the concrete or cement plug with additional concrete grout, cement grout, or soil.

(C) The owner shall be responsible for permanent abandonment of a well except that:

1. The well contractor is responsible for well abandonment if abandonment is required because the well contractor improperly locates, construct, repairs or completes the well. The well contractor shall permanently abandon any well in which the casing has not been installed or from which the casing has been removed prior to removing his equipment from the site.

2. The pump installer is responsible for well abandonment if abandonment is required because of improper well pump installation, repair, or removal.

(D) Any well not in compliance with the conditions for temporary abandonment shall be brought into compliance or permanently abandoned within thirty days of receipt of notice from the Guilford County Health Director.

(E) Any well whose construction would have a propensity to transfer contamination to the groundwater shall be repaired so that it will not act as a source or channel of contamination to the groundwater, or permanently abandoned within thirty days of receipt of notice from the Guilford County Health Director.

(F) Where a new well or public water supply is replacing an old well and the owner wishes to continue using the old well for irrigation or other uses, the old well may not be connected to the primary water supply system in any way and must conform with Chapter 2 Section VII (E).

(G) Where a new private well or public water supply is replacing an existing water supply well in which contamination has been confirmed through analyses, the existing well shall be permanently abandoned.

(H) When water-tight sanitary sewer lines are installed or extended, they shall maintain a minimum distance of one-hundred feet from any existing private or public water supply well. When this separation will not be maintained, water-tight sewer piping material, testing methods, and acceptability standards meeting water main standards shall be required, in which case the minimum separation distance may be reduced to twenty-five feet from an existing private water supply well and fifty feet from an existing public water supply well. Locating water-tight sewer lines closer to an existing water supply well shall necessitate proper abandonment of the well according to these rules. All appurtenances shall be outside the one-hundred foot radius.

(I) The Guilford County Health Director shall have the right to enter any property for the purpose of determining whether or not there may be an abandoned well on the property.

(J) The Guilford County Health Director may inspect the well to be abandoned before any abandonment material is placed in the well and observe as the material is placed in the well. The certified well contractor or well owner conducting the abandonment shall strictly comply with the inspections scheduling guideline as outlined in the most

recent Guilford County "Abandonment of Water Wells and Septic Tank Systems" guideline.

SECTION VIII RECORDS REQUIRED

(A) Reports

1. Any person, firm, or corporation performing well contractor activities in Guilford County shall submit to the Guilford County Health Director and to the well owner, a Record of Construction, repair, or abandonment to include the owner's name, the well's location, size and depth, the casing materials and depth, depth of water bearing zones, the method of finishing, the method of repairing, the method of abandoning, formation log, static water level, pumping water level, yield and pump type.

2. Any person, firm, or corporation installing a pump or equipment in a well should be registered with the Guilford County Health Department and shall be listed separately on the Record of Construction as having installed the pump.

3. The reports required in this section shall be submitted within thirty days after completing construction, repair, abandonment, or pump installation.

4. Reports shall be certified by the well contractor or pump installer completing the construction, repair, abandonment, or pump installation.

5. Upon final approval of a new or repaired well, the Guilford County Health Director shall issue a well Certificate of Completion.

6. Where a well is to be a source of water for human consumption, no person shall allow permanent electrical service to a facility upon construction, location or relocation until the official electrical inspector with jurisdiction as provided in N.C.G.S. 143-143.2 certifies to the electrical supplier that the required permit for well construction and a well Certificate of Completion have been issued.

(B) Registry

The Guilford County Health Department shall maintain a registry of all permitted private drinking water wells, specifying the well location and the water quality test results until the well is permanently abandoned in accordance with this chapter.

TABLE 1.

MINIMUM WALL THICKNESS FOR STEEL CASING:

Nominal Diameter (inches)	Wall Thickness (inches)
For 3 ½ " or smaller pipe	schedule 40 is required
4	0.142
5	0.156
5 ½	0.164
6	0.185
8	0.250
10	0.279
12	0.330
14 and larger	0.375

CHAPTER 3

RULES GOVERNING WELL CONSTRUCTION AND OPERATION FOR DUMT 10,000 WELL SYSTEMS

SECTION I PURPOSE

The rules for construction and operation for DUMT 10,000 wells systems in this chapter are established for better groundwater management practice to avoid an adverse effect on the public health by protecting groundwater quality and the surrounding water supply wells.

SECTION II APPLICATION

(A) A complete application shall be submitted to the Guilford County Health Director by any person or entity that intends to construct a well system, expand or increase an existing DUMT 10,000 well system, or upgrade an existing well system, to meet the definition of a DUMT 10,000 well system.

(B) All of the following items are required for DUMT 10,000 well systems for the Guilford County Health Director to process the application.

1. Names, addresses, and phone numbers of the proposed well owner and or operator
2. Address of the property of the proposed well
3. Site plan as defined in Chapter 1 of these rules
4. Land surface (i.e., pavement, gravel, or grass) and other recharge characteristics of the property
5. A tax map showing the property addresses and property owners within a one-thousand foot radius of the proposed well, identifying properties where wells are known or suspected to exist.
6. Proposed diameter of the well
7. Proposed depth range of the well
8. Gallons per day desired and estimate of sustainable yield
9. Proposed use of water (industrial/commercial processing, irrigation, drinking, bathing, etc.)
10. Number of employees and number of connections

SECTION III PERMIT FOR WELL CONSTRUCTION

(A) After reviewing the application, the Guilford County Health Director may issue a well permit with or without some modifications for well construction. The well permit is valid for one year from date of issuance. If construction has not commenced within one year from the date of issuance of the well permit, the well permit becomes invalid. When a well permit has become invalid, construction may not be commenced until the well permit has been updated and/or modified by the Guilford County Health Director or a new well permit is issued. In addition, a site for a

Community Water System or a Non-Transient Non-Community Water System governed by these rules shall be approved by a representative of the North Carolina Department of Environment and Natural Resources, Division of Environmental Health, Public Water Supply Section.

(B) The Guilford County Health Director shall approve the application if he/she finds that the usage of the proposed well will not adversely affect water quality and/or quantity within one-thousand feet, or otherwise pose a threat to public health or the environment.

SECTION IV WELL CONSTRUCTION STANDARDS

Construction of DUMT 10,000 wells shall comply with all applicable requirements of North Carolina Administrative Code (NCAC) Title 15A Subchapter 2C (Well Construction Standards), Guilford County Well Rules, and other applicable laws. Any DUMT 10,000 well which falls under the jurisdiction of NCAC Title 15A, Subchapter 18C (Rules Governing Public Water Systems) shall conform with all applicable requirements of those rules.

SECTION V PUMPING TEST AND GROUNDWATER TESTING

(A) A single well step-down pumping test shall be performed by a competent and reputable firm with experience in conducting such tests for twenty-four hours to obtain information on radius and depth of the cone of depression. Any existing water supply and/or monitoring wells on the property and/or adjacent properties can be used as observation wells during the pumping tests. The Guilford County Health Director shall also analyze the pumping test results and evaluate the information on radius and depth of the cone of depression from the well owner. When the well owner is not satisfied with the Guilford County Health Director's determination of the cone of depression or sustainable yield he or she may perform a longer pumping test, install observation wells to provide additional information to be evaluated, or provide additional information from an outside consultant for consideration.

(B) The pumping test may be waived if some or all of the following conditions are met:

1. The well is located within the city limits
2. There are no water supply wells within a one-thousand foot radius of the well
3. The property and adjacent properties are on municipal water

(C) A bacteriological water analysis shall be required to be performed by the Guilford County Health Department.

(D) If the new well is located within a one-thousand-five-hundred foot radius of a known contaminated soil or groundwater site, water samples shall be collected from the well

after the pumping test for analyses performed by the State Public Health laboratory or other laboratory certified by the State of North Carolina for volatile and semi-volatile organic compounds, inorganic compounds, pesticides, and nitrates. These analytical results shall be used to determine the water quality of the well and/or establishing the baseline of water quality.

SECTION VI PERMIT FOR SYSTEM OPERATION

(A) It shall be unlawful for any person to operate a DUMT 10,000 well system without a well system Operations Permit issued by the Guilford County Health Director. The Guilford County Health Director may assess a penalty or pursue any other remedy allowed by law for enforcement of health rules for violation.

(B) After reviewing the information from the well owner/operator, the Guilford County Health Director:

1. shall issue a system Operation Permit if, based on the provided information, he/she determines that the operation of the well system shall not adversely affect groundwater quality and water supply to other wells in the area and not otherwise adversely affect the public health.

2. shall issue a system Operations Permit with the following restrictions if he/she determines that the operation of the well system may affect the water supply to other wells in the area:
   a. reduction of daily usage
   b. requirement to install a water holding tank/pond and to restrict pumping to permitted hours.
   c. approval of the use of new technology which the Guilford County Health Director determines will negate the effect on other wells.

3. may issue a system Operation Permit without restrictions if the owner supplies adequate and potable quality water to those users of wells affected by the DUMT 10,000 well system.

4. shall deny a system Operation Permit if:

   a. groundwater quality is not suitable for human consumption if the well is used for drinking purposes and the well owner/operator does not install and maintain a water treatment system, or
   b. the usage of the well will substantially affect water supply to any other water supply wells within one-thousand feet or cause these wells to be unusable and the owner does not mitigate the issue as outlined in (B) 2 and 3 of this section.

(C) Water meter

1. All well systems are required to install a spool-piece pipe for water usage monitoring meter. If the Guilford County Health Director determines a well

system must be monitored for any time period, the Guilford County Health Director shall install a water meter in the place of the spool-piece section of the pipe. Public water supply wells regulated by 15A NCAC 18C shall be metered according to those rules.

2. If the Guilford County Health Director determines the daily usage for a well to be restricted, he or she may install a water meter for monitoring at the owner's cost.

(D) The Guilford County Health Director may suspend or revoke the system Operation Permit following ten days notice and hearing, if

1. any other water supply wells, which were constructed according to the existing well construction standards at the time of construction, are affected substantially due to the operation of a DUMT 10,000 well system within one year of issuance of the well Operation Permit, and the issue cannot be corrected as outlined in (B)2 and 3 of this section,

OR

2. the use of the well degrades the groundwater quality in the area.

In each case the burden of proof will be placed upon the complaining party by a preponderance of the evidence.

(E) The owner of the DUMT 10,000 well system shall request a revision of an Operation Permit for increase in water usage due to the expansion of business, the increase in number of employees or other reasons. The Guilford County Health Director may suspend or revoke the Operation Permit if the well owner increases water usage without a revision of the permit.

SECTION VII RECORDS REQUIRED

(A) Reports

1. Any person, firm, or corporation performing well contractor activities in Guilford County shall submit to the Guilford County Health Director and to the well owner, a record of construction, repair, or abandonment to include the owner's name, the well's location, size and depth, the casing materials and depth, depth of water bearing zones, the method of finishing or abandoning, formation log, static water level, pumping water level, yield and pump type.

2. Any person, firm, or corporation installing a pump or equipment in a well should be registered with the Guilford County Health Department and shall be listed separately on the record of construction as having installed the pump.

3. The reports required in this section shall be submitted within thirty days after completing construction, repair, abandonment, or pump installation.

4. Reports shall be certified by the well contractor or pump installer completing the construction, repair, abandonment, or pump installation.

5. Upon final approval of a new or repaired well, the Guilford County Health Director shall issue a DUMT 10,000 well system operation permit.

6. Where a DUMT 10,000 well system is to be a source of water for human consumption, no person shall allow permanent electrical service to a facility upon construction, location or relocation until the official electrical inspector with jurisdiction as provided in N.C.G.S. 143-143.2 certifies to the electrical supplier that the required permit for well construction and a DUMT 10,000 well system operation permit have been issued.

CHAPTER 4

WELL CONSTRUCTION, REPAIR, AND ABANDONMENT FOR MONITORING WELLS, AIR INJECTION WELLS, AIR SPARGING WELLS, AND RECOVERY WELLS

SECTION I MONITORING WELL, AIR INJECTION WELL, AIR SPARGING WELL, AND RECOVERY WELL PERMITS

(A) It shall be unlawful for any person to commence, operate, and/or maintain any monitoring well, air injection well, air sparging well, or recovery well contractor activities in Guilford County without first obtaining a monitoring well, air injection well, air sparging well, and recovery well permit from the Guilford County Health Director. The monitoring well, air injection well, air sparging well, and recovery well permit shall be obtained by the responsible party or his authorized agent. The monitoring well, air injection well, air sparging well, and recovery well permit shall be valid for twelve months from date of issuance.

(B) Monitoring well, air injection well, air sparging well, and recovery well permits must be renewed every twelve months from the date of initial issuance for so long as they may remain in operation.

(C) One monitoring well, air injection well, air sparging well, and recovery well permit, only, shall be required for each site regardless of the number of monitoring wells, air injection wells, air sparging wells, and/or recovery wells to be placed on that site.

(D) An application for a monitoring well, air injection well, air sparging well, and recovery well permit shall be submitted to the Guilford County Health Department by the responsible party or his agent. The application shall include the following:

1. the site name;
2. the owner's name (facility name);
3. the owner's mailing address
4. the site address;
5. a map of the general site area, showing the location of:
   a. all property boundaries, at least one of which is referenced to minimum of two landmarks, such as identified roads, intersections, streams or lakes;
   b. all existing wells, identified by the type of use, within the property boundaries;
   c. all proposed wells, identified by type of use, within the property boundaries;
   d. all sources of known or potential groundwater contamination within the property boundaries.
6. a construction diagram of the proposed monitoring well, air injection well, air sparging well, and/or recovery well showing type of well and including specifications describing all materials to be used and methods of construction.
7. the well contractor company's name, if known.

(E) When it becomes necessary to construct additional monitoring wells, air injection

wells, air sparging wells, or recovery wells on a previously permitted site, no construction may be initiated until such time as an application for the additional wells has been received by the Guilford County Health Department and found to be in compliance with (D) of this section.

(F) Any monitoring well, air injection well, air sparging well, or recovery well no longer serving its intended use shall be permanently abandoned in accordance with Section IV of this chapter.

(G) A copy of the monitoring well, air injection well, air sparging well, and recovery well permit must be on site during the construction of any monitoring well, air injection well, air sparging well, and/or recovery well.

(H) Only certified well contractors shall perform well contractor activities

(I) The Guilford County Health Director is authorized to revoke any monitoring well, air injection well, air sparging well, and recovery well permits issued pursuant to these regulations upon the determination that these regulations are not being fully complied with.

SECTION II STANDARDS OF CONSTRUCTION

(A) Monitoring wells, air injection wells, air sparging wells, and recovery wells shall be located, designed, constructed and operated in accordance with 15A NCAC 2C, Well Construction Standards, Section .0108(c) and (d).

(B) Drilling equipment shall be decontaminated using accepted methods prior to each boring in order to minimize the potential for cross contamination of the groundwater resources from one boring location to another.

(C) The geographical coordinates of all monitoring wells, air injection wells, air sparging wells, and recovery wells shall be established with an accuracy to within three ~~(3)~~ feet (using decimal degrees) at the time of well construction and the coordinates shall be recorded on the record of construction as required by Section V of this chapter.

SECTION III WELL MAINTENANCE AND REPAIR

(A) Every monitoring well, air injection well, air sparging well, and recovery well shall be maintained in a condition whereby it will conserve and protect the groundwater resources, and whereby it will not be a source or channel of contamination to the groundwater.

(B) All construction and materials used in the maintenance, replacement or repair of any monitoring well, air injection well, air sparging well, or recovery well shall meet the requirements for new installations.

(C) Broken, punctured or otherwise defective or unserviceable casing, screens, fixtures, seals or any part of the wellhead shall be repaired or replaced within thirty days of notification by the Guilford County Health Department or the well shall be permanently abandoned.

SECTION IV PERMANENT ABANDONMENT OF MONITORING WELLS, AIR INJECTION WELLS, AIR SPARGING WELLS, AND RECOVERY WELLS

(A) Monitoring wells, air injection wells, air sparging wells, or recovery wells constructed in consolidated rock formations or that penetrate zones of consolidated rock may be filled with cement, sand, gravel or drill cuttings opposite the zones of consolidated rock. The top of the sand, gravel or cutting fill shall be at least five feet below the top of the consolidated rock. The remainder of the well shall be filled with cement grout only.

(B) Monitoring wells, air injection wells, air sparging wells, or recovery wells constructed in unconsolidated rock formations shall be completely filled with cement grout by introducing it through a pipe extending to the bottom of the well which can be raised as the well is filled.

(C) Monitoring wells, air injection wells, air sparging wells, or recovery wells less than twenty feet in depth which do not penetrate the water table shall be abandoned in such a manner as to prevent the well from being a channel allowing the vertical movement of water or source of contamination to the groundwater supply.

(D) Any monitoring well, air injection well, air sparging well, or recovery well which acts as a source or channel of contamination to the groundwater shall be repaired or permanently abandoned within thirty days of receipt of notice from the Guilford County Health Director.

(E) The Guilford County Health Director shall have the right to enter any property for the purpose of determining whether or not there may be an abandoned monitoring well, air injection well, air sparging well, or recovery well on the property.

(F) Monitoring wells, air injection wells, air sparging wells, and recovery wells shall be permanently abandoned by the driller in accordance with this rule within two days after drilling or two days after testing is complete, whichever is less restrictive.

(G) In the case that any monitoring well, air injection well, or air sparging well is being converted to a recovery well, the conversion shall be completed within thirty days or the monitoring well, air injection well, or air sparging well shall be permanently abandoned.

SECTION V RECORDS REQUIRED

(A) Any person, firm or corporation constructing or abandoning any monitoring well, air

injection well, air sparging well, or recovery well in Guilford County shall submit to the Guilford County Health Director and to the responsible party, a record of the construction or abandonment to include the owner's name, the type of well (monitoring, air injection, air sparging, or recovery), the well's location, size and depth, the geographical coordinates of the well using decimal degrees, the casing materials and depth, static water level, depth of water bearing zones, the method of finishing or abandoning, formation log and pumping water level, if acceptable.

(B) The reports required in this section shall be submitted within fifteen days after completing construction, repair, or abandonment.

(C) Reports shall be certified and signed by the certified well contractor completing the construction, repair, or abandonment of the monitoring well, air injection well, air sparging well, or recovery well as being in compliance with these Rules and Regulations.

(D) Copies of the results of all analyses performed on water samples taken from any monitoring well, air injection well, air sparging well, or recovery well shall be submitted to the Guilford County Health Department within fifteen days after completion of analysis.

CHAPTER 5

SEVERABILITY AND HISTORY

SECTION I SEVERABILITY

If any provisions of clause of these rules and regulations shall be declared invalid, void, or unconstitutional, such declaration shall not invalidate any other provisions or clause of said rules and regulations.

SECTION II EFFECTIVE PLAN

Chapters 1, 2 and 5

These rules and regulations adopted by the Guilford County Board of Health on November 9, 1988, Section III(D)(9)(A-E) adopted by the Guilford County Board of Health on May 24, 1989, shall be in full force and effective on June 1, 1989.

Amended and readopted by the Guilford County Board of Health on September 27, 1989.

Amended and readopted by the Guilford County Board of Health on January 31, 1990.

~~Amended and readopted by the Guilford County Board of Health on May 26, 1992.~~

Amended and readopted by the Guilford County Board of Health on April 26, 1993 shall be in full force and effective June 1, 1993.

Amended and readopted by the Guilford County Board of Health on January 24, 1996 shall be in full force and effective February 1, 1996.

Amended and readopted by the Guilford County Board of Health on June 9, 1997 shall be in full force and effective July 1, 1997.

Amended and readopted by the Guilford County Board of Health on September 28, 1998 shall be in full force and effective October 1, 1998.

Amended and readopted by the Guilford County Board of Health on November 15, 1999 shall be in full force and effective January 1, 2000.

Amended and readopted by the Guilford County Board of Health on February 19, 2001 shall be in full force and effective April 1, 2001.

Amended and readopted by the Guilford County Board of Health on May 20, 2002 shall be in full force and effective August 1, 2002.

Amended and readopted by the Guilford County Board of Health on December 15, 2003 shall be in full force and effective January 1, 2004.

Amended and readopted by the Guilford County Board of Health on June 20, 2005 shall be in full force and effective July 1, 2005.

Amended and readopted by the Guilford County Board of Health on August 15, 2005 shall be in full force and effective August 16, 2005.

Amended and readopted by the Guilford County Board of Health on May 21, 2007 shall be in full force and effective July 1, 2007.

Amended and readopted by the Guilford County Board of Health on June 16, 2008 shall be in full force and effective July 1, 2008.

Chapter 3

Adopted by the Guilford County Board of Health on November 15, 1999 shall be in full force and effective January 1, 2000.

Amended and readopted by the Guilford County Board of Health on February 19, 2001 shall be in full force and effective April 1, 2001.

Amended and readopted by the Guilford County Board of Health on June 20, 2005 shall be in full force and effective July 1, 2005.

Amended and readopted by the Guilford County Board of Health on May 21, 2007 shall be in full force and effective July 1, 2007.

Amended and readopted by the Guilford County Board of Health on June 16, 2008 shall be in full force and effective July 1, 2008.

Chapter 4

Adopted by the Guilford County Board of Health on January 24, 1996 shall be in full force and effective February 1, 1996.

Amended and readopted by the Guilford County Board of Health on November 15, 1999 shall be in full force and effective January 1, 2000.

Amended and readopted by the Guilford County Board of Health on June 20, 2005 shall be in full force and effective July 1, 2005.

Amended and readopted by the Guilford County Board of Health on May 21, 2007 shall be in full force and effective July 1, 2007.

Amended and readopted by the Guilford County Board of Health on June 16, 2008 shall be in full force and effective July 1, 2008.

Pursuant to North Carolina General Statute 130A-39(f), a local board of health may, in its rules, adopt by reference any code, standard, rule or regulation which has been adopted by any agency of this State, another state, any agency of the United States or by a generally recognized association. Copies of any material adopted by reference shall be filed with the rules. Therefore incorporated by reference:

North Carolina Administrative Code Title 15A Department of Environment and Natural Resources
Subchapter 2C – WELL CONSTRUCTION STANDARDS
Section .0100 - Criteria and Standards Applicable to Water Supply and Certain Other Type Wells

North Carolina Administrative Code Title 15A Department of Environment and Natural Resources
Subchapter 2C – WELL CONSTRUCTION STANDARDS
Section .0300 - Permitting and Inspection of Private Drinking Water Wells

North Carolina Administrative Code Title 15A Department of Environment and Natural Resources
Subchapter 18A – SANITATION
Section .3800 - Private Drinking Water Well Sampling

Amended and readopted by the Guilford County Board of Health on June 16, 2008 shall be in full force and effective July 1, 2008.

Jean P Douglas, PharmD
Jean Douglas, PharmD
Chairperson, Board of Health

6/16/08
Date

Merle Green
Merle Green, MPH, MBA
Health Director

6/16/08
Date